DSA IR 25-2.13

METAL SUSPENSION SYSTEMS FOR LAY-IN PANEL CEILING: 2013 CBC

Disciplines:	Structural	**History:**	Revised 11/09/17	Revised 05/16/13
			Revised 04/20/17	Revised 12/21/12
			Revised 02/10/16	Revised in its entirety 05/18/11
			Revised in its entirety 09/21/15	Issued 06/22/09 as IR 25-5
			Revised 04/08/14	

Division of the State Architect (DSA) documents referenced within this publication are available on the DSA Forms or DSA Publications webpages.

PURPOSE: The purpose of this Interpretation of Regulations (IR) is to provide guidelines for the design and installation of metal suspension systems for lay-in ceilings on projects submitted under the 2013 California Building Code (CBC). For projects submitted to the Division of the State Architect (DSA) for review under the 2007 or 2010 CBC, see DSA *IR 25-2.07: Metal Suspension Systems for Lay-in Panel Ceilings: 2007 CBC* or *IR 25-2.10: Metal Suspension Systems for Lay-in Panel Ceilings: 2010 CBC*, respectively.

1. GENERAL REQUIREMENTS

CBC Section 1616A.1.20 (1616.10.16*) requires the design and installation to be in compliance with ASTM C635, C636, and E580, Section 5, with modifications.

Note: Amendments in CBC Section 1616A.1.20 (1616.10.16*) replace and append ASCE 7, Section 13.5.6.

The requirements in this IR apply to flat and level ceiling systems whose total weight, including ceiling mounted air terminals, services and light fixtures, does not exceed four (4) psf. Heavier systems, systems that are not flat and level, those supporting lateral loads from partitions, and free floating ceilings supported by chains or cables are beyond the minimum requirements of this IR and will require special design and details.

2. CEILING DESIGN & INSTALLATION REQUIREMENTS

2.1 Ceiling System Components:

a) Shall comply with ASTM C635 and Section 5.1 of ASTM E580.

b) The ceiling grid system must be rated heavy duty as defined by ASTM C635.

c) Main runners, cross runners, splices, expansion devices and intersection connectors shall be designed to carry a mean ultimate test load of not less than 180 lbs. in compression and tension per ASTM E580 Section 5.1.2.

d) Ceiling wire shall be Class 1 zinc coated (galvanized) carbon steel conforming to ASTM A641. Wire shall be #12 gauge (0.106" diameter) with soft temper and minimum tensile strength = 70 ksi. The maximum allowable (ASD) tension load for wire meeting this specification is 350 lbs.
   - Four (4) turns of the wire within 1.5" will develop the wire allowable load.
   - Three (3) turns of the wire within 3" is assumed to develop no more than 50 percent of wire allowable load.

2.2 Suspension System Installation:

a) Shall comply with ASTM C636 and Section 5.2 of ASTM E580.

b) #12 gauge hanger wires may be used for up to and including a 4 foot by 4 foot grid spacing and shall be attached to main runners. Splices in hanger wires shall develop 50 percent of the wire allowable load.

c) Provide #12 gauge hanger wires at the ends of all main and cross runners within eight (8) inches of the support or within one-fourth (1/4) of the length of the end tee, whichever is least, for the perimeter of the ceiling area. Perimeter wires are not required when the length of the end tee is eight (8) inches or less.

d) Ceiling grid members shall be attached to two (2) adjacent walls per ASTM E580, Section 5.2.3. Ceiling grid members shall be at least 3/4 inch clear of other walls. If walls run diagonally to ceiling grid system runners, one end of main and cross runners should be free, and a minimum of 3/4 inch clear of wall.

e) The width of the perimeter supporting closure angle shall be not less than two (2) inches. Use of angles with smaller widths in conjunction with proprietary perimeter clips may be acceptable in accordance with Section 5 of this IR.

f) At the perimeter of the ceiling area, where main or cross runners are not connected to the adjacent wall, provide interconnection between the runners at the free end to prevent lateral spreading. A metal stabilizer or a #16 gauge wire with a positive mechanical connection to the runner may be used and placed within eight (8) inches of the wall. Where the perpendicular distance from the wall to the first parallel runner is eight (8) inches or less, the stabilizer or #16 gauge wire is not required.

2.3 Lateral Force Bracing Assembly Installation:

a) Lateral force bracing assemblies consisting of a compression strut and four (4) #12 gauge splayed bracing wires oriented 90 degrees from each other are required for all ceiling areas.

> **Exception.** Lateral force bracing may be omitted for suspended acoustical ceiling systems with a ceiling area not to exceed 144 square feet, for all values of S_{DS}, when perimeter support is provided in accordance with Section 2.2 of this IR and perimeter walls are designed to carry the ceiling lateral forces.

b) Lateral force bracing assemblies shall be spaced per Table 1 for all values of the component importance factor (I_p) of the ceiling.

c) There shall be a brace assembly a distance of not more than one-half (1/2) of the above spacing from each surrounding wall, expansion joint and at the edges of any ceiling vertical offset. For example, where the brace spacing is 8' x 12', the edge distance shall be 4 feet in the direction of the 8 foot spacing and 6 feet in the direction of the 12 foot spacing.

d) The slope of bracing wires shall not exceed 45 degrees from the horizontal plane and wires shall be taut. Splices in bracing wires shall develop the wire allowable load.

e) Compression struts shall meet the following requirements:
   - The strut shall be sized to adequately resist the vertical component force induced by the ceiling bracing wires and have a maximum kl/r not to exceed 300. The struts listed in Appendix A meet this requirement for ceilings complying with the general requirements of this IR.
   - The strut shall not be more than one (horizontal) in six (vertical) out of plumb.

TABLE 1
LATERAL FORCE BRACE ASSEMBLY SPACING

Design Spectral Acceleration Parameter, S_{DS}	**Brace Assembly Spacing (ft.)**	
	$z/h \leq 0.5$[a]	$z/h > 0.5$[a,b]
$S_{DS} \leq 1.15$	12 x 12	12 x 12
$1.15 < S_{DS} \leq 1.73$	12 x 12	8 x 12
$S_{DS} > 1.73$	8 x 12	8 x 8

Footnotes:

a. Where, as defined in ASCE 7, Section 13.3.1:
z = height in structure of point of attachment of ceiling with respect to the base.
h = average roof height of the structure with respect to the base.

b. It shall be permitted to use the brace assembly spacing for "z/h > 0.5" for the full building height.

2.4 Attachment of Hanger and Bracing Wires:

a) Fasten hanger wires with not less than three (3) tight turns in three (3) inches. Hanger wire loops shall be tightly wrapped and sharply bent to prevent any vertical movement or rotation of the member within the loops (see ASTM E580, Section 5.2.7.2).

b) Fasten bracing wires with not less than four (4) tight turns in one and one-half (1-1/2) inches.

c) Hanger and bracing wire anchorage to the structure shall be installed in such a manner that the direction of the anchorage aligns closely with the direction of the wire (e.g. bracing wire ceiling clips must be bent as shown in the details and rotated as required to align closely with the direction of the wire, screw eyes in wood must be installed so they align closely with the direction of the wire, etc.).

d) Separate all ceiling hanger and bracing wires at least six (6) inches from all unbraced ducts, pipes, conduit, etc.

e) Hanger and bracing wires shall not attach to or bend around obstructions including but not limited to: piping, ductwork, conduit and equipment. Provide trapeze or other supplementary support members at obstructions to allow typical hanger spacing. Brace assemblies must be configured and/or located in order to avoid obstructions in addition to maintaining the required brace assembly spacing.

f) Provide additional hangers, struts and brace assemblies as required at all ceiling breaks, soffits or discontinuous areas.

g) Hanger wires that are more than one (horizontal) in six (vertical) out of plumb shall have counter-sloping wires.

Note: See ASTM C636, Figure 1, for counter-sloping methods.

h) Attachment of the bracing wires to the structure above and to the main runners shall be adequate for the load imposed. The weight (W_p) shall be taken as not less than four (4) psf for calculating seismic forces (F_p).

i) Post-installed anchors (e.g. expansion anchors, screw anchors and power actuated fasteners) shall have a current Evaluation Report acceptable to DSA in accordance with DSA IR A-5.

j) Power actuated fasteners in concrete are not permitted for bracing wires.

k) DSA approval of a construction plan is required prior to installing post-installed anchors in prestressed concrete. The construction plan shall demonstrate how the location of existing prestressing tendons and strands will be located and denoted as necessary to avoid interference.

2.5 Expansion Joints, Seismic Separation Joints:

a) Expansion joints shall be provided in the ceiling at intersections of corridors and at junctions of corridors and lobbies or other similar areas.

b) For ceiling areas exceeding 2,500 square feet, a seismic separation joint shall be provided to divide the ceiling into areas not exceeding 2,500 square feet in accordance with ASTM E580, Section 5.2.9.

2.6 Ceiling Fixtures, Terminals and Devices:

a) All fixtures, terminals and other devices shall be mounted in a manner that will not compromise ceiling performance in accordance with Section 13.5.6.2.2 Item 5 of ASCE 7 as amended by CBC Section 1616A.1.20 (1616.10.16*) and ASTM E580 Sections 5.3 and 5.4.

b) Ceiling panels shall not support any light fixtures, air terminals or devices.

c) Penetrations through the ceiling for sprinkler heads and other similar devices that are not integrally tied to the ceiling system in the lateral direction shall have a two (2) inch oversized ring, sleeve or adapter through the ceiling tile to allow free movement of one (1) inch in all horizontal directions. Alternatively, per ASTM E580, Section 5.2.8.5, a flexible sprinkler hose fitting that can accommodate one (1) inch of ceiling movement shall be permitted to be used in lieu of the oversized ring, sleeve or adapter.

d) Slack safety wires shall be considered hanger wires for installation and testing requirements.

2.6.1 Light Fixtures:

a) All light fixtures** shall be positively attached to the ceiling suspension systems by mechanical means per California Electrical Code (CEC) Article 410.36 to resist a horizontal force equal to the weight of the fixture. A minimum of two screws or approved fasteners are required at each light fixture, per ASTM E580, Section 5.3.1.

**See Section 3.1 of this IR for pendant-mounted light fixture support and bracing requirements.

b) Surface-mounted light fixtures shall be attached to the main runner with at least two positive clamping devices on each fixture. The clamping device shall completely surround the supporting ceiling runner and be made of steel with a minimum thickness of #14 gauge. Rotational spring catches do not comply. A #12 gauge slack safety wire shall be connected from each clamping device to the structure above. Provide additional supports when light fixtures are eight (8) feet or longer or exceed 56 lbs. Maximum spacing between supports shall not exceed eight (8) feet.

c) Light fixtures weighing less than or equal to 10 lbs. shall have a minimum of one (1) #12 gauge slack safety wire connected from the fixture housing to the structure above.

d) Light fixtures weighing greater than 10 lbs. but less than or equal to 56 lbs. may be supported directly on the ceiling runners, but they shall have a minimum of two (2) #12 gauge slack safety wires connected from the fixture housing at diagonal corners to the structure above.

Exception. All light fixtures greater than two by four feet weighing less than 56 lbs. shall have a #12 gauge slack safety wire at each corner.

e) All light fixtures weighing greater than 56 lbs. shall be independently supported by not less than four (4) taut #12 gauge hanger wires (one at each corner) attached from the fixture housing to the structure above or other approved hangers. The four (4) taut #12 gauge wires or other approved hangers, including their attachment to the structure above, shall be capable of supporting four (4) times the weight of the fixture.

2.6.2 Services within the Ceiling:

a) All flexible sprinkler hose fitting mounting brackets, ceiling-mounted air terminals or other services shall be positively attached to the ceiling suspension systems by mechanical means to resist a horizontal force equal to the weight of the component. Screws or approved fasteners are required. A minimum of two attachments are required at each component.

b) Ceiling-mounted air terminals or other services weighing less than or equal to 20 lbs. shall have one (1) #12 gauge slack safety wire attached from the terminal or service to the structure above.

c) Flexible sprinkler hose fittings, ceiling-mounted air terminals or other services weighing more than 20 lbs. but less than or equal to 56 lbs. shall have two (2) #12 gauge slack safety wires (at diagonal corners) connected from the terminal or service to the structure above.

d) Flexible sprinkler hose fittings, ceiling-mounted air terminals or other services weighing more than 56 lbs. shall be supported directly from the structure above by not less than four (4) taut #12 gauge hanger wires attached from the terminal or service to the structure above or other approved hangers. The four (4) taut #12 gauge wires or other approved hangers, including their attachment to the structure above, must be capable of supporting four (4) times the weight of the unit.

2.6.3 Other Devices within the Ceiling.

All lightweight miscellaneous devices, such as strobe lights, occupancy sensors, speakers, exit signs, etc., shall be attached to the ceiling grid per Section 2.6.2 a) of this IR. In addition, devices weighing more than 10 lbs. shall have a #12 gauge slack safety wire anchored to the structure above per Section 2.6.1 b) of this IR. Devices weighing more than 20 lbs. shall be supported from the structure above using details provided by the registered design professional.

3. ADDITIONAL REQUIREMENTS

3.1 Pendant-Mounted Light Fixtures:

a) Where pendant-mounted light fixtures are to be installed in areas with a suspended ceiling, the construction documents shall include complete support details complying with this IR and DSA *IR 16-9: Pendant Mounted Light Fixtures*.

b) Support pendant-mounted light fixtures directly from the structure above with hanger wires or cables passing through each pendant hanger and capable of supporting two

(2) times the weight of the fixture.

c) If a pendant-mounted light fixture is directly and independently braced below the ceiling (i.e., aircraft cables to walls), then a brace assembly is not required above the ceiling.

d) If a pendant-mounted light fixture is free to swing 45 degrees from vertical in all directions, and is not directly and independently braced below the ceiling, then a bracing assembly is only required where the pendant hanger penetrates the ceiling. Special details are required to attach the pendant hanger to the bracing assembly to transmit the horizontal and vertical forces.

Exception. Where the weight of the fixture is less than 20 lbs., the vertical component of the brace force need not be considered so no compression strut/post is required.

e) Rigid conduit shall not be used for attachment of the fixtures.

3.2 Fire Rated Ceilings:

a) Provide a detail and tested assembly number for rated ceiling assemblies from an authorized testing agency. The components and installation details must conform in every respect with the listed detail and number. Details shall clearly depict all components, including insulation materials, framing and attachment of the design so that the assembly can be constructed and inspected accordingly.

b) Pop rivets, screws or other attachments are not acceptable unless specifically detailed in the listed construction detail(s), or an approved listing by a State Fire Marshal (SFM) recognized laboratory.

3.3 Acoustical Ceiling Tile Panel Installation

For ceiling installations utilizing acoustical tile panels of mineral or glass fiber, it is not mandatory to provide 3/4 inch clearance between the acoustical tile panels and the wall on the sides of the ceiling which are free to slip.

3.4 Other Panel Types

Panels weighing more than one-half (1/2) psf, other than mineral fiber and glass fiber acoustical tile, and all metal and wood panels shall be positively attached to the ceiling suspension runners by mechanical means, such as bolts, screws or rivets, and each attachment shall have the allowable design strength to support 100 percent of the weight of the panel acting in any direction. A minimum of two attachments are required for each panel. For ceiling installations utilizing panels other than mineral or glass fiber, 3/4 inch clearance shall be provided between the ceiling panel and the wall on the sides of the ceiling area which are free to slip, unless otherwise justified by seismic qualification indicated below.

The use of other types of attachment, such as clips, snap-in devices, perforated lips, clamping devices or spring loaded devices or hooks, shall be listed per DSA IR A-5 and identified for use with the type of ceiling framing members and panels. The listing shall be seismically qualified in accordance with ASCE 7 Section 13.2.5 or 13.2.6.

An alternate means of compliance per California Administrative Code (CAC), Section 4-304 may be proposed and reviewed on a project-by-project basis when using unlisted means of attachment. The alternate means of attachment shall have the allowable design strength to support 100 percent of the weight of the panel acting in any direction and shall be capable of maintaining that strength if the ceiling grid is distorted or out of level.

It is also alternately permitted to provide a secondary means of connecting the panel to the grid or structure to retain the panel in case of panel dropout, ceiling grid distortion and ceiling grid becoming out-of-level. The secondary attachment shall have the allowable design strength to support two (2) times the weight of the panel acting in any direction, such as a slack wire or cable.

Special attachment details complying with one of the methods outlined above, such as screws or cables, shall be provided at the perimeter of the ceiling, where panels are cut or altered, or where non-standard panel sizes or edge conditions occur.

3.5 Exitways

Exitways of essential services buildings shall be installed in accordance with Section 13.5.6.2.2 Item 1 of ASCE 7 as amended by CBC Section 1616A.1.20 (1616.10.16*). A main or cross runner shall be installed on all sides of each piece of tile, board or panel and each light fixture or grill. Splices or intersection of such runners shall be attached with through connectors such as pop rivets, screws, pins, plates with end tabs or other approved connectors.

3.6 Free Floating Ceilings

Free floating ceilings (ceilings not attached to any walls) supported by wires in accordance with this IR shall be braced in accordance with this IR, regardless of the ceiling area, unless it can be demonstrated the anticipated ceiling movement will not cause failure of the ceiling components or failure of mechanical, electrical, plumbing and fire and life safety components/systems within the ceiling area and within the area of anticipated movement.

The perimeter of free floating ceilings shall be supported by a continuous runner which is spliced in accordance with ASTM E580 Section 5.1.2.

4. CEILING SYSTEM ALTERATION. The entire[1] ceiling in the affected space shall be upgraded to meet the current requirements of the CBC and this IR if any portion of the grid system is cut or altered and the ceiling has no lateral bracing assemblies[2] (4-way splay wires and compression post) or has lateral bracing assemblies spaced more than 12 feet on-center.

> **Exception.** If the ceiling has lateral bracing assemblies spaced no more than 12 feet on-center, a ceiling upgrade will only be required if the area cut or altered exceeds 10 percent of the entire ceiling area.

Notes:

1. The “entire” ceiling in the affected space is defined as the area of ceiling bounded by four walls or a combination of walls and expansion joints or seismic separation joints.
2. With DSA concurrence, other existing lateral bracing systems may be deemed equivalent to a 4-way splay wire and compression post lateral force bracing system.

4.1 Where the ceiling grid is not cut or altered, and the scope of work includes only the following:

- replacement of existing ceiling panels with like panels of equal or lesser weight
- replacement of light fixtures and/or terminals with like units (units of equal size and of equal or lesser weight) placed in the same location

no upgrade to the ceiling grid, suspension system or lateral force brace assemblies is required.

4.2 Re-Use of Existing Ceiling Hanger Wires and Bracing Wires. Existing ceiling hanger and bracing wires may be reused provided they comply with the following:

a) The gauge and spacing of the wires must comply with the current applicable codes and this IR.

b) If a new wire is to be spliced to an existing wire, the architect or structural engineer in general responsible charge must submit to DSA for approval a detail and specification describing how the splice is to be made. Acceptable wire splice details are provided in Appendix A.

c) See Section 7 of this IR for testing requirements for the re-use of existing hanger and bracing wire assemblies.

5. DSA ACCEPTANCE OF EVALUATION REPORTS. Ceiling grid systems or components, with valid evaluation reports issued by qualified evaluation agencies, in accordance with DSA *IR A-5: Acceptance of Products, Materials, and Evaluation Reports*, are accepted by DSA, provided the system or component meets the requirements of CBC Section 1616A.1.20 (1616.10.16*), ASTM C635, C636 and E580. Where a qualified evaluation report is utilized, the installation shall comply with all the requirements specified in the evaluation report, i.e., connections, member sizes, perimeter details, special clips to wall angles, etc.

In accordance with DSA IR A-5, DSA will accept OSHPD Preapproved Details (OPD) “2013 CBC Standard Suspended Ceiling Details for Acoustical Tile or Lay-in Panel Ceilings.”

6. CONSTRUCTION DOCUMENTS. The construction documents shall clearly identify all suspended ceiling systems, support details, and lateral bracing.

6.1 General Requirements. The items listed in this section are required to be provided in the construction documents where applicable to the project scope. This list includes items common to most projects but is not complete for all projects. Additional information and/or details may be required on the construction documents for a specific project for specialty conditions, configurations, products, etc.

Except as indicated in both Section 6.2 and Appendix A of this IR, it is not permitted to reproduce this IR on the construction documents as a means to meet these requirements.

6.1.1 Ceiling Systems. A list of acceptable grid systems must be shown on the construction documents. Each system specified must be classified as heavy duty and shall have a valid evaluation report in accordance with DSA IR A-5. The construction documents shall specify the following for each acceptable grid system: the manufacturer, product name, evaluation report number, main and cross runner catalog number, and if used, seismic wall clip. When manufacturer specific information (proprietary seismic wall clips, etc.) is provided in the specifications, details on the construction drawings shall be provided and/or coordinated to reflect the same manufacturer specific information.

6.1.2 Ceiling Suspension System. The ceiling suspension system and its anchorage to the structure shall be fully detailed.

Where accepted proprietary devices, clips, wall angles, etc. are utilized, the details on the construction documents shall clearly indicate the installation details necessary to show compliance with all evaluation report requirements.

6.1.3 **Ceiling Lateral Force Bracing.** The ceiling lateral force bracing system, including the bracing wires and compression strut, and the bracing system anchorage to the structure shall be fully detailed on the construction documents. The bracing assembly spacing at each floor and roof level must be clearly indicated.

6.1.4 **Expansion Joints and Seismic Separations Joints.** Expansion joints and seismic separation joints shall be fully detailed and the location shall be shown on the ceiling plans.

6.1.5 **Ceiling Fixtures, Terminals and Devices Anchorage and Bracing.** Details of construction for all fixtures, terminals, flexible fire sprinkler hose fittings and other devices must be provided as required to comply with this IR.

6.1.6 **Pendant-Mounted Light Fixtures.** Where pendant-mounted light fixtures are to be installed in areas with a suspended ceiling, the construction documents shall include complete support details complying with this IR and DSA IR 16-9.

6.1.7 **Supplementary Support Members.** Trapeze or other supplementary support members provided so typical hanger spacing can be maintained while avoiding obstructions shall be shown on the construction documents.

6.1.8 **Partition Bracing.** Partition bracing shall be shown on the construction documents and be braced independent of the ceiling system.

6.2 **Ceiling Notes and Details in Appendix A.** The ceiling notes and details provided in Appendix A are deemed to meet the general requirements of this IR. These notes and details shall not be used for construction or inspection except when incorporated in DSA approved construction documents.

Use of the notes and details is not mandated by DSA; they are provided only as a convenience to the registered design professional for incorporation into the construction documents.

Use of other notes and details created by the registered design professional is always acceptable provided they comply with the CBC and this IR. While these notes and details do not cover every condition that may occur on every project, they are intended to cover conditions common to many projects, and it is anticipated their use will facilitate the design, plan review and construction process.

Electronic drawing files of the details created using Revit LT™ 2015 are available for download. DSA is providing these electronic drawing files to the registered design professional for convenience only and DSA is not responsible for issues of compatibility with particular computer systems or conversion to other file formats. The requirements of this IR are in no way changed or modified by providing the registered design professional with the electronic drawing files. The files may not be currently up to date or in conformance with the published IR and the registered design professional shall verify and coordinate the information with the latest published IR. Information contained in the files may be changed or updated by DSA, and DSA shall have no responsibility to notify or supply the registered design professional with these changes.

6.2.1 **Conditions for Use of Ceiling Notes and Details.** The conditions and requirements for use of the ceiling notes and details in Appendix A are as follows:

a) The details give no consideration to suitability for use in a specific application, compatibility with other building systems, appropriate use of materials or design, appearances, etc. The registered design professionals listed on the plan review application shall review all such qualities, features and/or properties to ensure code compliance, appropriate integration with other building systems, and proper design for the project-specific conditions and installation.

b) When the details in the Appendix are used, they shall be incorporated into the construction drawings submitted for DSA approval. Incorporation by reference alone is not permitted. *Only the notes and details applicable to the scope of the project shall be incorporated in the construction documents (e.g., do not incorporate wood connection details in the construction drawings for a concrete structure, do not include essential services building details in the construction documents for a school project, etc.).*

c) Provided the content of the details is not changed, it is left to the discretion of the registered design professional(s) to reconfigure (renumber, resize, etc.) the details for integration into the construction drawings.

   Exception. The registered design professional(s) is required to provide additional information on a detail where brackets [ ] are indicated. The brackets and notes to the registered design professional shall be removed from the details and replaced with the applicable requirements.

d) These details submitted as part of the construction documents during the plan review process will be subject to plan review as follows:
   - It is expected no DSA plan review comment will be made on a detail incorporated into the construction documents that is unaltered and found applicable to the project for which it is submitted.
   - Where a detail requires the designer to provide additional information to complete the detail before applying it to the drawings, plan review will be limited to the following:
     - A review of only the additional information provided.
     - A review to determine if the detail, with the additional information, is applicable to project for which it is submitted.
   - Where a detail incorporated into the construction documents has been altered beyond that indicated in c) and d) above, it will be subject to a full review for both detail content and applicability to the project for which it is submitted.

e) Where conditions not covered by the details in Appendix A occur, project-specific design and details will be required. This includes, but is not limited to, pendant light fixtures, projector supports, projector screens, ceiling fans and free-floating ceilings.

7. TESTING. All field testing must be performed in the presence of the project inspector or a special inspector.

7.1 New Installations

Post-installed anchors in concrete used to support hanger wires shall be tested at a frequency of 10 percent. Power actuated fasteners in concrete shall be field tested for 200 lbs. in tension. All other post-installed anchors in concrete shall be tested in accordance with CBC Section 1913A.7.

Post-installed anchors in concrete used to attach bracing wires shall be tested at a frequency of 50 percent in accordance with CBC Section 1913A.7.

7.2 Re-Use of Existing Ceiling Hanger Wires and Bracing Wires:

a) All existing ceiling hanger wire/anchor assemblies must be field tested to 200 lbs.

b) All existing bracing wire/anchor assemblies must be field tested to 440 lbs.

c) Where a new wire is spliced to an existing wire, each spliced wire/anchor assembly must be field tested to the loads given for existing assemblies above.

REFERENCES:

California Code of Regulations (CCR) Title 24
Part 2, 2013 California Building Code (CBC), Section 1616A.1.20, 1616.10.16*
Part 3, 2013 California Electrical Code (CEC), Article 410.36
ASCE 7-10 Minimum Design Loads for Building and Other Structures
ASTM C635.07, C636-08, and E580-10a

This IR is intended for use by DSA staff and by design professionals to promote statewide consistency for review and approval of plans and specifications as well as construction oversight of projects within the jurisdiction of DSA, which includes State of California public schools (K–12), community colleges and state-owned or state-leased essential services buildings. This IR indicates an acceptable method for achieving compliance with applicable codes and regulations, although other methods proposed by design professionals may be considered by DSA.

This IR is subject to revision at any time. Please check DSA's website for currently effective IRs. Only IRs listed on the webpage at www.dgs.ca.gov/dsa/publications at the time of project application submittal to DSA are considered applicable.

APPENDIX A:
CONSTRUCTION DOCUMENTS
CEILING NOTES AND DETAILS

Appendix A

Sheet Index

SHEET NO.	SHEET TITLE	REV. DATE
0.00	Sheet Index	
0.01	Sheet Index	
1.00	Ceiling Notes	
1.01	Ceiling Notes	
1.02	Ceiling Notes	
1.03	Ceiling Notes	
2.10	Typical Ceiling Plan for 8’-0” X 8’-0” Brace Assembly Spacing	
2.11	Typical Ceiling Plan for 8’-0” X 12’-0” Brace Assembly Spacing	
2.12	Typical Ceiling Plan for 12’-0” X 12’-0” Brace Assembly Spacing	
2.30	Suspended Acoustical Ceiling – Corridor Ceiling Plan (Schools)	
2.31	Suspended Acoustical Ceiling – Corridor Ceiling Plan (ESB[1])	
2.35	Suspended Ceiling – Suspension and Bracing Assembly	
2.40	Suspended Acoustical Ceiling – Expansion Joint at Intersections (Schools)	
2.41	Suspended Acoustical Ceiling – Expansion Joint at Intersections (ESB[1])	
2.45	Suspended Acoustical Ceiling – Seismic Separation Joint	
2.50	Typical Ceiling Section @ Exitway Corridors (ESB[1])	
2.60	Ceiling Perimeter	
2.80	Suspended Acoustical Ceiling – Light Fixture/Air Terminal Support	
3.10	Suspended Acoustical Ceiling – Channel Type Strut	
3.20	Suspended acoustical Ceiling – EMT Type Strut	
3.21	Compression Strut Table	
4.10	Hanger and Bracing Wire Connections – Typical Wire Turns	
4.11	Hanger and Bracing Wire Connections Matrix	
4.20	Hanger Wire Connection to Metal Deck	

[1]ESB – Essential Services Buildings

Basis Document: DSA IR 25-2.13			Sheet No:
Sheet Title: **Sheet Index**	rev.	09-21-15	0.00

Sheet Index

SHEET NO.	SHEET TITLE	REV. DATE
4.21	Hanger Wire Connection to Concrete Over Metal Deck	
4.22	Hanger Wire Connection to Concrete Slab, Beam, or Joist	
4.23	Hanger Wire Connection to Structural Steel	
4.24	Hanger Wire Connection to Metal Stud Wall	
4.25	Hanger Wire Connection to Sawn Timber	
4.26	Hanger Wire Connection to Wood I Joist	
4.27	Hanger Wire Connection to Wood Chord Truss	
4.28	Hanger Wire Connection to Open Web Steel Joist	
4.29	Typical Saddle Tie Detail	
4.30	Bracing Wire Connection at Metal Deck	
4.31	Bracing Wire Connection to Concrete Over Metal Deck	
4.32	Bracing Wire Connection to Concrete Slab, Beam, or Joist	
4.33	Bracing Wire Connection to Structural Steel	
4.34	Bracing Wire Connection to Metal Stud Wall	
4.35	Bracing Wire Connection to Sawn Timber	
4.36	Bracing Wire Connection to Wood I Joist	
4.37	Bracing Wire Connection to Wood I Joist	
4.38	Bracing Wire Connection to Wood Chord Truss	
4.39	Bracing Wire Connection to Open Web Steel Joist	
5.10	Compression Strut Connection to Structure – Connection Matrix	
5.20	Strut Connection to Metal Deck	
5.21	Strut Connection to Concrete Over Metal Deck	
5.30	Strut Connection to Concrete Slab, Beam, or Joist	
5.40	Strut Connection to Structural Steel	
5.50	Strut Connection to Sawn Timber with Gypsum Board	
5.60	Strut Connection to Sawn Timber without Gypsum Board	
6.10	Ceiling Wire Splices	

Basis Document: **DSA IR 25-2.13**			Sheet No:
Sheet Title: **Sheet Index**	rev.	09-21-15	0.01

1. CEILING SYSTEM GENERAL NOTES:

1.01 Ceiling system components shall comply with ASTM C635-07 and Section 5.1 of ASTM E580-10a.

1.02 The ceiling grid system must be rated heavy duty as defined by ASTM C635-08.

1.03 Ceiling systems. The following ceiling system(s) is/are part of the scope of this project: ***[For each system used, the RDP shall indicate in the construction documents, the information that follows]***

Manufacturer's Name _____.
Product Evaluation Report Type and Number _____.
Manufacturer's Model Number - main runner _____.
Manufacturer's catalog number - cross runner _____.

1.04 Seismic Wall Clip: ***[RDP to specify if used]***

Manufacturer's Model _____.

1.05 Ceiling panels shall not support any light fixtures, air terminals or devices.

1.06 For ceiling installations utilizing acoustical tile panels of mineral or glass fiber, it is not mandatory to provide ¾" clearance between the acoustical tile panels and the wall on the sides of the ceiling which are free to slip. For all other ceiling panel types, provide ¾" clearance between the ceiling panel and the wall on the sides of the ceiling free to slip.

2. MATERIALS:

2.01 Ceiling wire shall be Class 1 zinc coated (galvanized) carbon steel conforming to ASTM A641-09a. Wire shall be #12 gage (0.106" diameter) with soft temper and minimum tensile strength = 70 ksi.

2.02 Galvanized sheet steel (including that used for metal stud and track compression struts/post) shall conform to ASTM A653-11, or other equivalent sheet steel listed in Section A2.1 of the North American Specification for the Design of Cold-Formed Steel Structural Members 2007, including supplement 2 dated 2010 (AISI S100-07/S2-10). Material 43 mil (18 gage) and lighter shall have minimum yield strength of 33 ksi. Material 54 mil (16 gage) and heavier shall have a minimum yield strength of 50 ksi.

2.03 Electrical metallic tube (EMT) shall be ANSI C80.3/UL 797 carbon steel with G90 galvanizing. EMT shall have minimum yield strength (Fy) of 30 ksi and minimum ultimate strength (Fu) of 48 ksi.

Basis Document: **DSA IR 25-2.13**			Sheet No:
Sheet Title: **Ceiling Notes**	rev.	09-21-15	1.00

3. ATTACHMENT OF HANGER AND BRACING WIRES:

3.01 Separate all ceiling hanger and bracing wires at least six (6) inches from all unbraced ducts, pipes, conduit, etc.

3.02 Hanger and bracing wires shall not attach to or bend around obstructions including but not limited to: piping, ductwork, conduit and equipment.

3.03 Hanger wires that are more than one (horizontal) in six (vertical) out of plumb shall have counter-sloping wires.

3.04 Slack safety wires shall be considered hanger wires for installation and testing requirements.

3.05 Hanger and bracing wire anchorage to the structure shall be installed in such a manner that the direction of the anchorage aligns closely with the direction of the wire. (e.g. bracing wire ceiling clips must be bent as shown in the details and rotated as required to align closely with the direction of the wire, screw eyes in wood must be installed so they align closely with the direction of the wire, etc.)

4. FASTENERS AND WELDING:

4.01 Sheet metal screws shall comply with ASTM C1513-10, ASME B18.6.4-89 (R2005). Penetration of screws through joined material shall not be less than three exposed threads.

4.02 Expansion anchors shall be: ***[RDP to indicate manufacturer, product, evaluation report number and load for each size specified per CBC 1913A.7.2.]***

4.03 Power-Actuated Fasteners shall be: ***[RDP to indicate manufacturer, product, evaluation report number]***

4.04 If not otherwise specified in the evaluation report, power-actuated fasteners installed in steel shall be installed so the entire pointed end of the fastener is driven through the steel member.

4.05 Power-actuated fasteners in concrete are not permitted for bracing wires.

4.06 Concrete reinforcement and prestressing tendons shall be located by non-destructive means prior to installing post - installed anchor.

4.07 Welding shall be in accordance with AWS D1.3 using E60XX series electrodes.

5. TESTING: All field testing must be performed in the presence of the project inspector.

5.01 Post-installed anchors in concrete used to support hanger wires shall be tested at a frequency of 10 percent. Power actuated fasteners in concrete shall be field tested for 200 lbs. in tension. All other post-installed anchors in concrete shall be tested in accordance with CBC Section 1913A.7.

5.02 Post-installed anchors in concrete used to attach bracing wires shall be tested at a frequency of 50 percent in accordance with CBC Section 1913A.7.

Basis Document: **DSA IR 25-2.13**			Sheet No:
Sheet Title: **Ceiling Notes**	rev.	09-21-15	1.01

6. LIGHT FIXTURES:

6.01 All light fixtures shall be positively attached to the ceiling suspension systems by mechanical means to resist a horizontal force equal to the weight of the fixture. A minimum of two screws or approved fasteners are required at each light fixture, per ASTM E580, Section 5.3.1.

6.02 Surface-mounted light fixtures shall be attached to the main runner with at least two positive clamping devices. The clamping device shall completely surround the supporting ceiling runner and be made of steel with a minimum thickness of #14 gage. Rotational spring catches do not comply. A #12 gage slack safety wire shall be connected from each clamping device to the structure above. Provide additional supports when light fixtures are eight (8) feet or longer or exceed 56 lb. Maximum spacing between supports shall not exceed eight (8) feet.

6.03 Light fixtures weighing less than or equal to 10 lb. shall have a minimum of one (1) #12 gage slack safety wire connected from the fixture housing to the structure above.

6.04 Light fixtures weighing less than or equal to 10 lb. shall have a minimum of one (1) #12 gage slack safety wire connected from the fixture housing to the structure above.

6.05 Light fixtures weighing greater than 10 lb. but less than or equal to 56 lbs. may be supported directly on the ceiling runners, but they shall have a minimum of two (2) #12 gage slack safety wires connected from the fixture housing at diagonal corners to the structure above.

Exception: All light fixtures greater than two by four feet weighing less than 56 lbs. shall have a #12 gage slack safety wire at each corner.

6.06 All Light fixtures weighing greater than 56 lb. shall be independently supported by not less than four (4) taut #12 gage hanger wires (one at each corner) attached from the fixture housing to the structure above or other approved hangers. The four (4) taut #12 gage wires or other approved hangers, including their attachment to the structure above, shall be capable of supporting four (4) times the weight of the fixture.

7. SERVICES WITHIN THE CEILING:

7.01 All flexible sprinkler hose fitting mounting brackets, ceiling-mounted air terminals or other services shall be positively attached to the ceiling suspension systems by mechanical means. Screws or approved fasteners are required. A minimum of two attachments are required at each component.

7.02 Ceiling-mounted air terminals or other services weighing less than or equal to 20 lb. shall have one (1) #12 gage slack safety wire attached from the terminal or service to the structure above.

7.03 Flexible sprinkler hose fittings, ceiling-mounted air terminals or other services weighing more than 20 lb. but less than or equal to 56 lb. shall have two (2) #12 gage slack safety wires (at diagonal corners) connected from the terminal or service to the structure above.

7.04 Flexible sprinkler hose fittings, ceiling-mounted air terminals or other services weighing more than 56 lb. shall be supported directly from the structure above by not less than four (4) taut #12 gage hanger wires attached from the terminal or service to the structure above or other approved hangers.

Basis Document: **DSA IR 25-2.13**			Sheet No:
Sheet Title: **Ceiling Notes**	rev.	09-21-15	1.02

8. OTHER DEVICES WITHIN THE CEILING:

8.01 All lightweight miscellaneous devices, such as strobe lights, occupancy sensors, speakers, exit signs, etc., shall be attached to the ceiling grid. In addition, devices weighing more than 10 lbs. shall have a #12 gage slack safety wire anchored to the structure above. Devices weighing more than 20 lb. shall be supported independently from the structure above.

Basis Document: **DSA IR 25-2.13**			Sheet No:
Sheet Title: **Ceiling Notes**	rev.	09-21-15	1.03

9/14/2015 2:16:02 PM

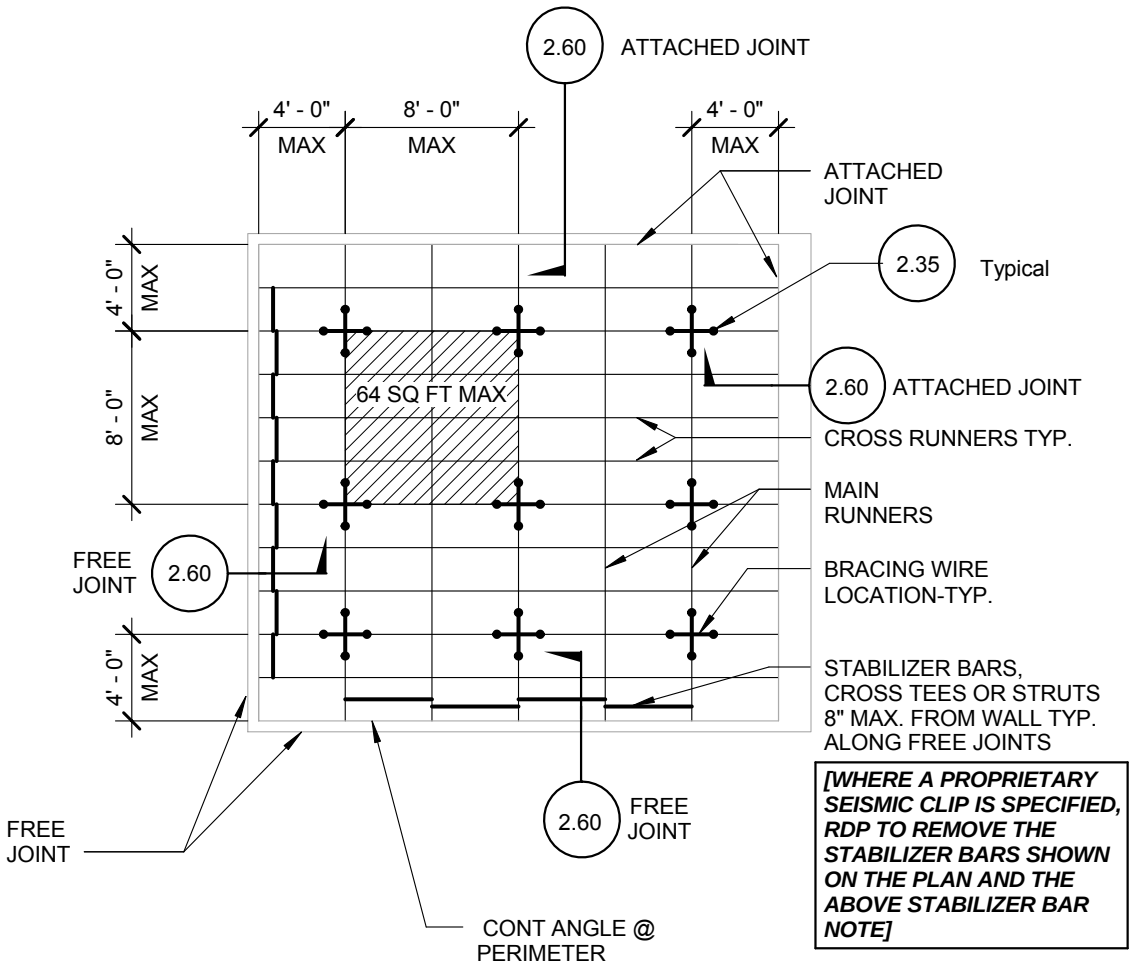

[WHERE A PROPRIETARY SEISMIC CLIP IS SPECIFIED, RDP TO REMOVE THE STABILIZER BARS SHOWN ON THE PLAN AND THE ABOVE STABILIZER BAR NOTE]

NOTE:

BRACING WIRES AND COMP. STRUT SHALL OCCUR
AT EVERY 64 SQ. FT. MAX. IN ROOMS OVER 144 SQ. FT.

Basis Document : **DSA IR 25-2.13**			Sheet No:
Sheet Title : **TYPICAL CEILING PLAN FOR 8'-0" X 8'-0" Brace Assembly Spacing**	rev.	09-21-15	2.10

9/14/2015 2:16:02 PM

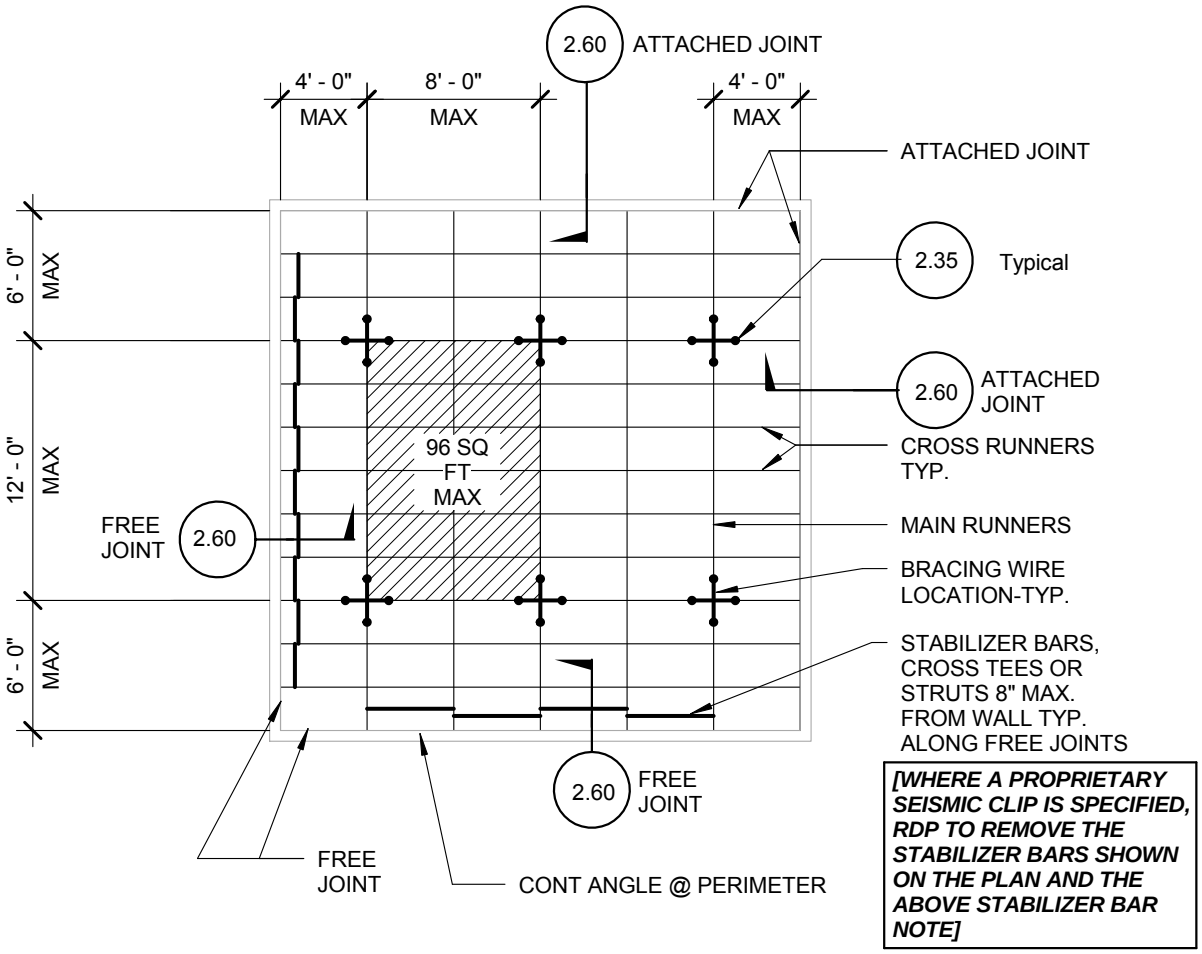

[WHERE A PROPRIETARY SEISMIC CLIP IS SPECIFIED, RDP TO REMOVE THE STABILIZER BARS SHOWN ON THE PLAN AND THE ABOVE STABILIZER BAR NOTE]

NOTE:

BRACING WIRES AND COMP. STRUT SHALL OCCUR
AT EVERY 96 SQ. FT. MAX. IN ROOMS OVER 144 SQ. FT.

Basis Document : **DSA IR 25-2.13**			Sheet No:
Sheet Title : **TYPICAL CEILING PLAN FOR 8'-0" x 12'-0" Brace Assembly Spacing**	rev.	09-21-15	2.11

9/14/2015 2:16:02 PM

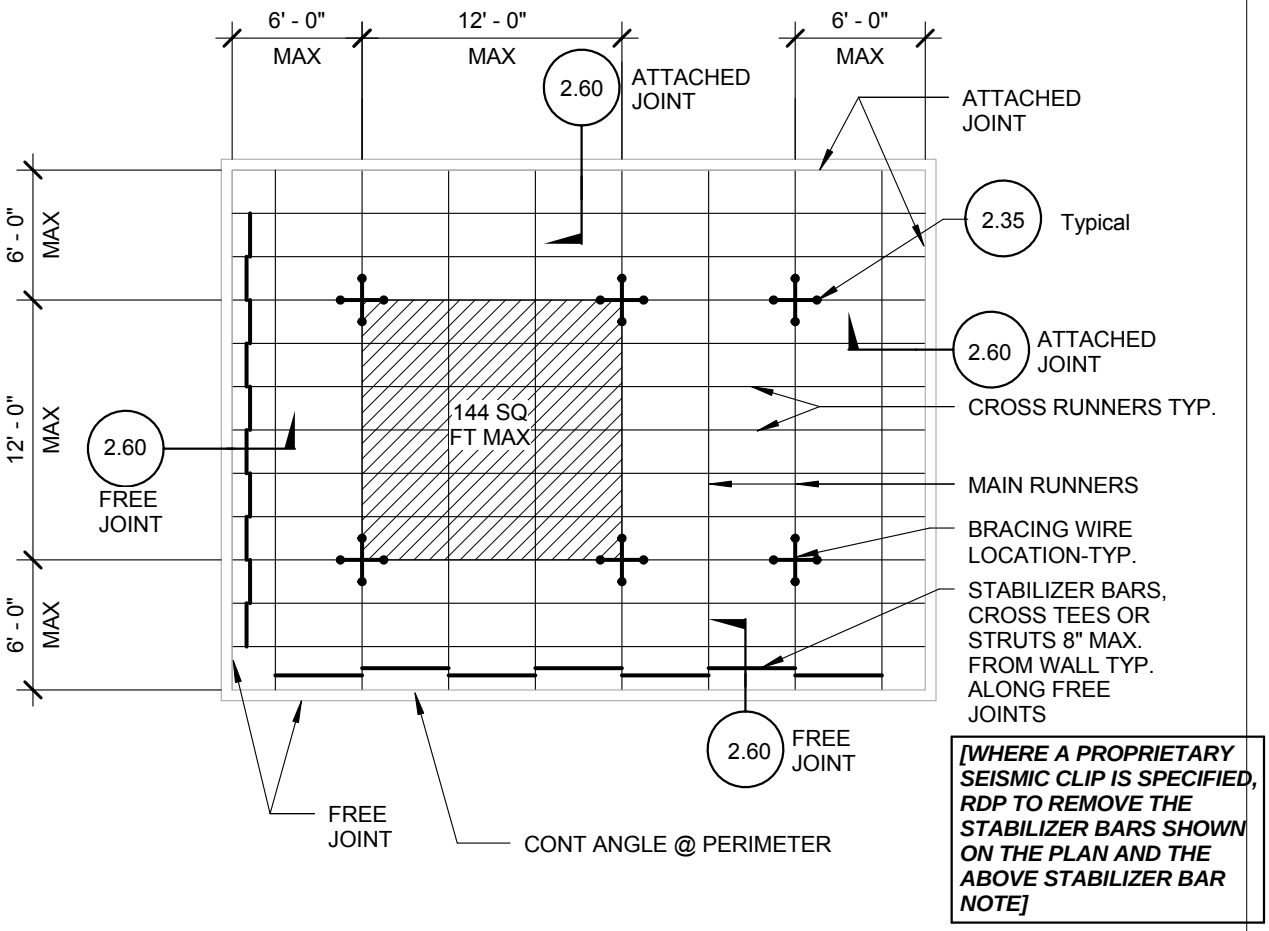

[WHERE A PROPRIETARY SEISMIC CLIP IS SPECIFIED, RDP TO REMOVE THE STABILIZER BARS SHOWN ON THE PLAN AND THE ABOVE STABILIZER BAR NOTE]

NOTE:

BRACING WIRES AND COMP. STRUT SHALL OCCUR
AT EVERY 144 SQ. FT. MAX. IN ROOMS OVER 144 SQ. FT.

Basis Document : **DSA IR 25-2.13**			Sheet No:
Sheet Title : **TYPICAL CEILING PLAN FOR 12'-0" x 12'-0" Brace Assembly Spacing**	rev.	09-21-15	2.12

9/14/2015 2:16:03 PM

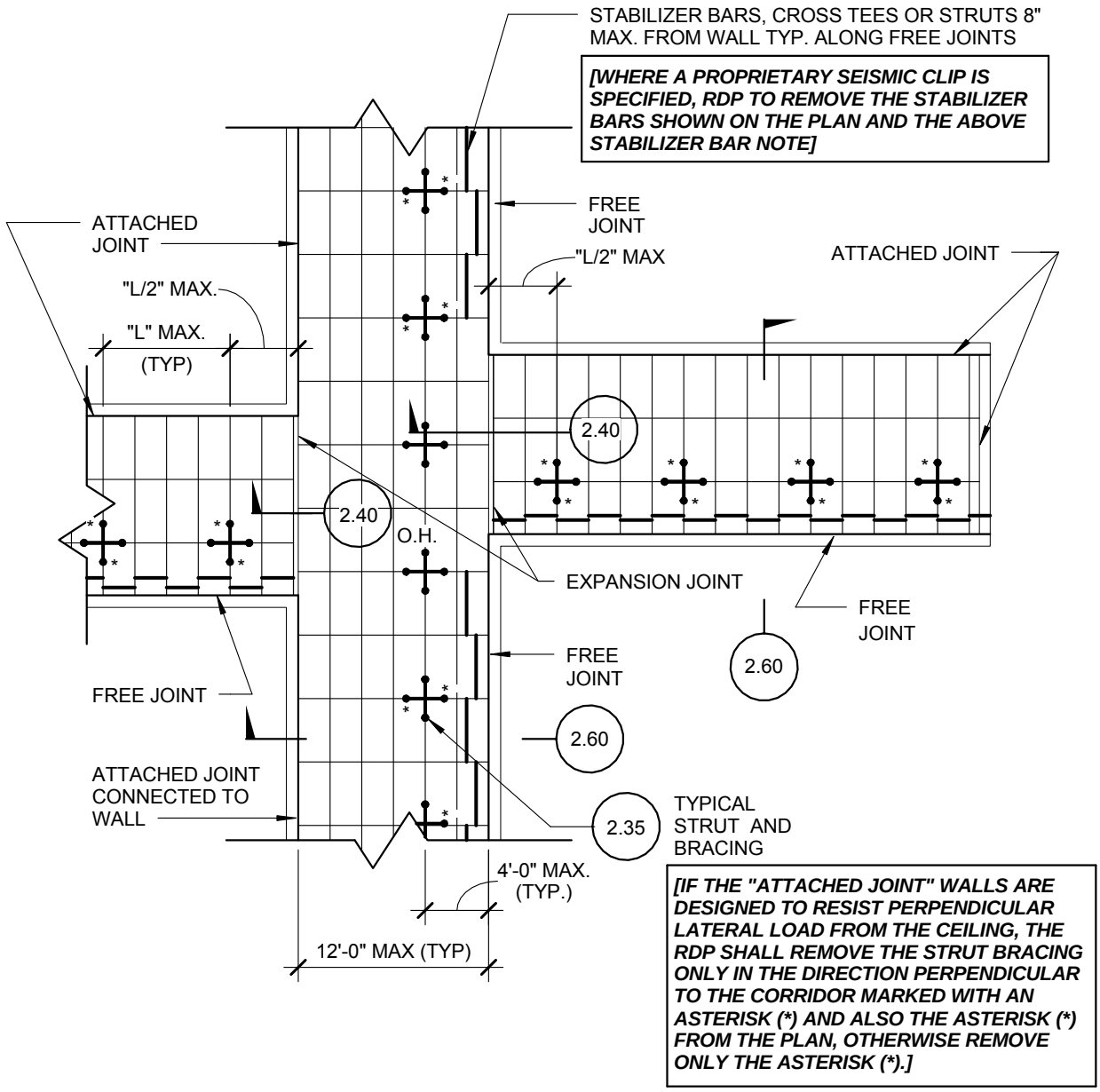

LOCATION OF EXPANSION/SLIP JOINTS IN CORRIDORS

NOTES:

1. "L"IS MAX. BRACE ASSEMBLY SPACING PER CEILING PLAN DETAIL, FOR EXAMPLE, WHERE 8' x 12' SPACING IS SPECIFIED, USE "L" = 8'.

Basis Document : **DSA IR 25-2.13**			Sheet No:
Sheet Title : **SUSPENDED ACOUSTICAL CEILING-CORRIDOR CEILING PLAN (Schools)**	rev.	09-21-15	2.30

9/14/2015 2:16:03 PM

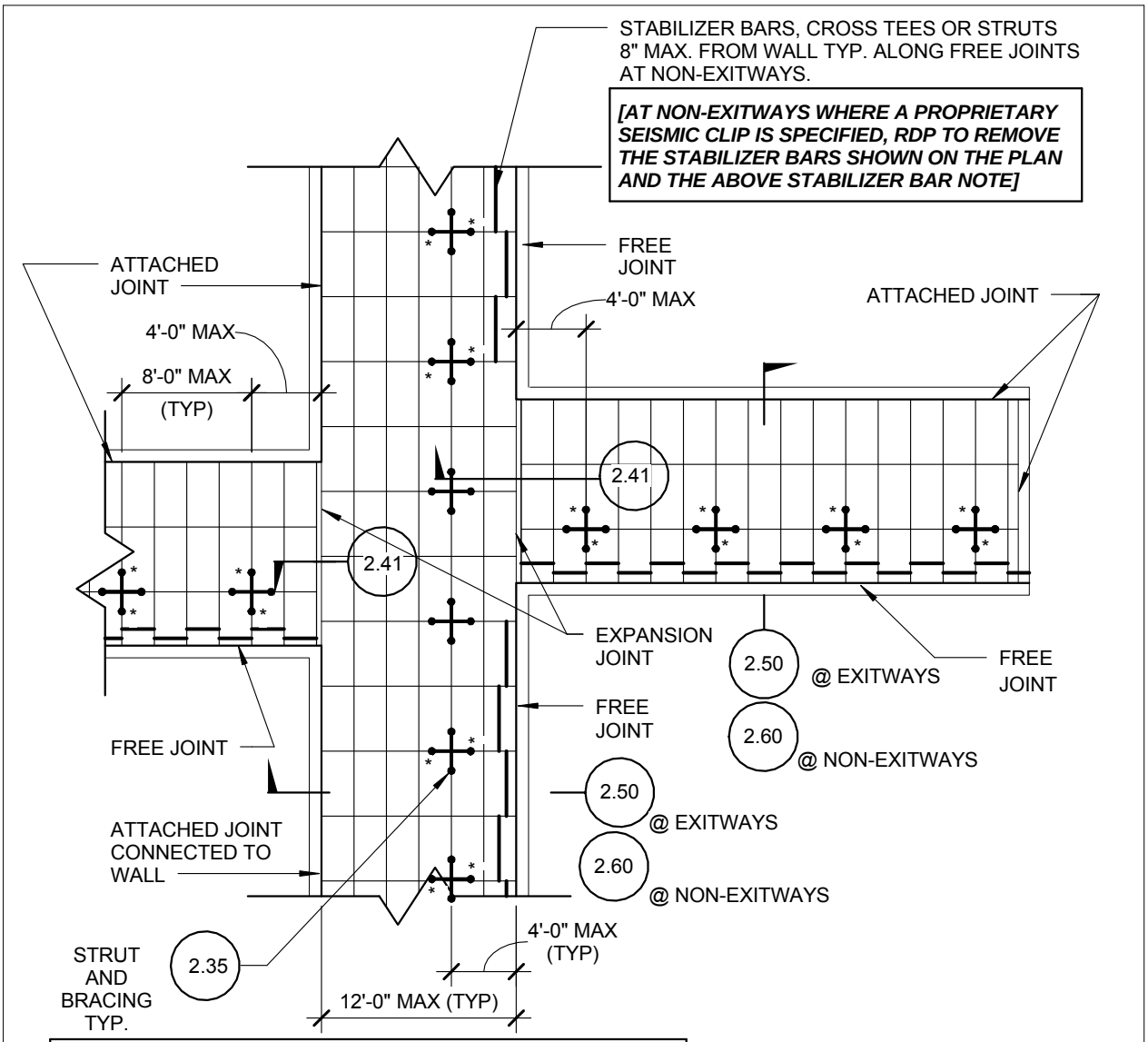

[IF THE "ATTACHED JOINT" WALLS ARE DESIGNED TO RESIST PERPENDICULAR LATERAL LOAD FROM THE CEILING, THE RDP SHALL REMOVE THE STRUT BRACING ONLY IN THE DIRECTION PERPENDICULAR TO THE CORRIDOR MARKED WITH AN ASTERISK (*) AND ALSO THE ASTERISK (*) FROM THE PLAN, OTHERWISE REMOVE ONLY THE ASTERISK (*).]

LOCATION OF EXPANSION/SLIP JOINTS IN CORRIDORS

Basis Document : **DSA IR 25-2.13**			Sheet No:
Sheet Title : **SUSPENDED ACOUSTICAL CEILING-CORRIDOR CEILING PLAN (Essential Sevices Buildings)**	rev.	09-21-15	2.31

3/10/2017 11:34:43 AM

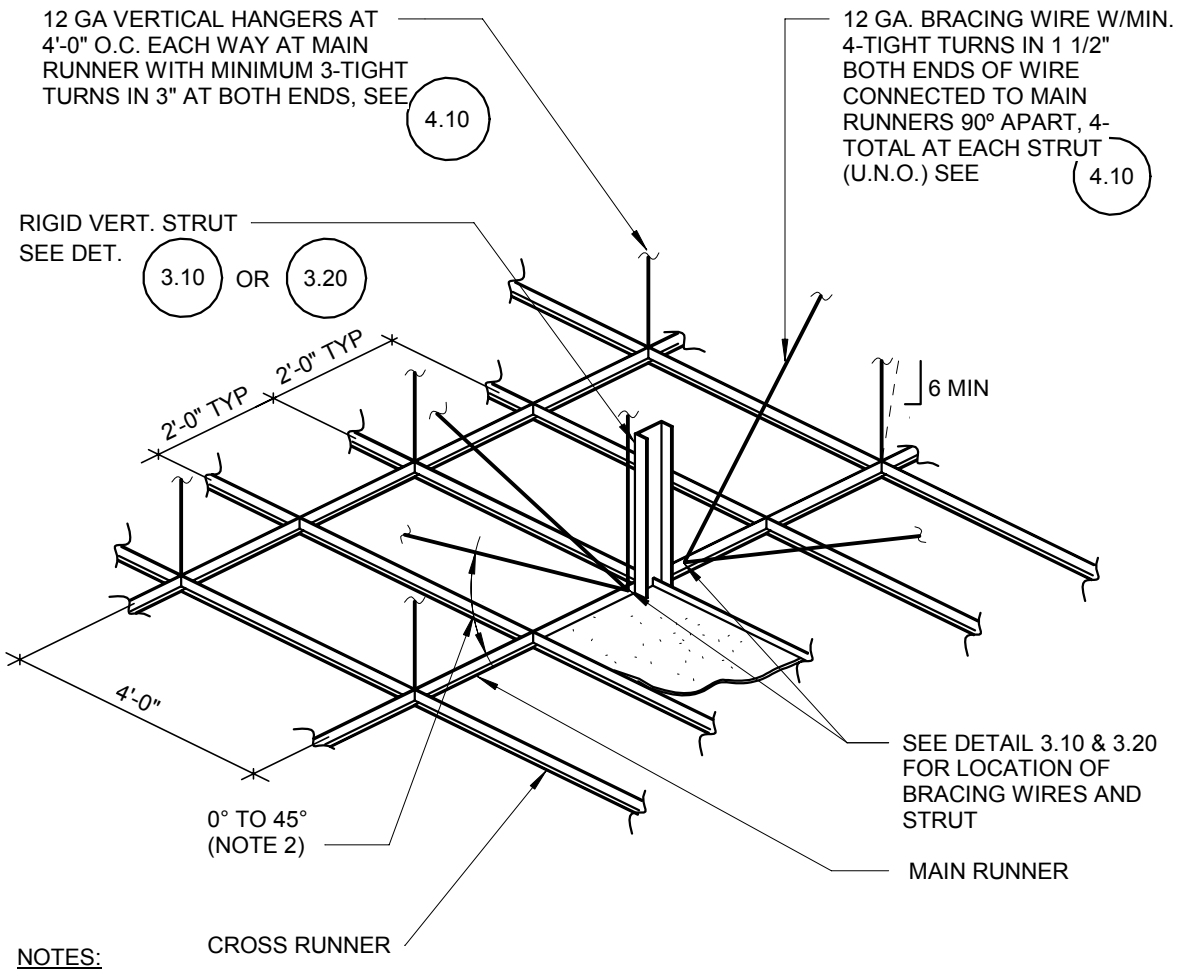

NOTES:

1. STRUTS SHALL NOT REPLACE HANGER WIRES.
2. THE MINIMUM ACCEPTABLE ANGLE IS DETERMINED SUCH THAT THE WIRES DO NOT INTERFERE WITH THE RUNNERS, LIGHT FIXTURES, ETC. AND REMAIN STRAIGHT AND UNOBSTRUCTED.

Basis Document : **DSA IR 25-2.13**			Sheet No:
Sheet Title : **SUSPENDED CEILING - SUSPENSION AND BRACING ASSEMBLY**	rev.	09-21-15	2.35
	rev.	03-10-17	

9/14/2015 2:16:03 PM

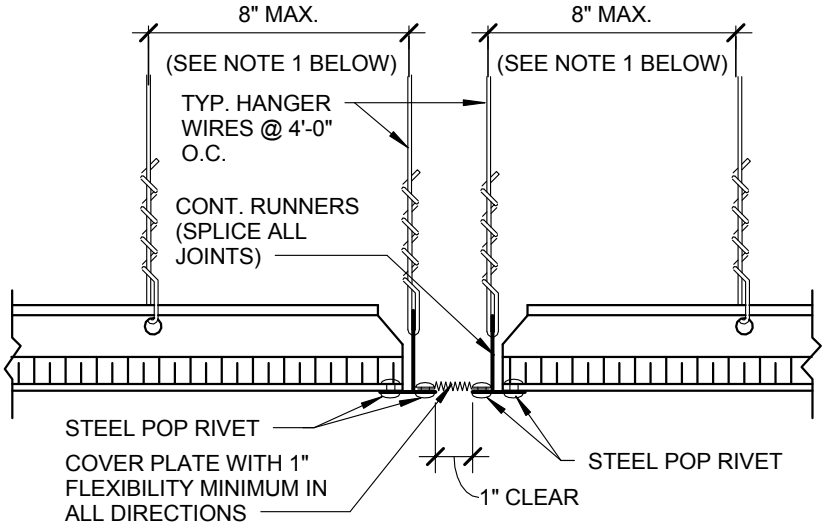

EXPANSION JOINT

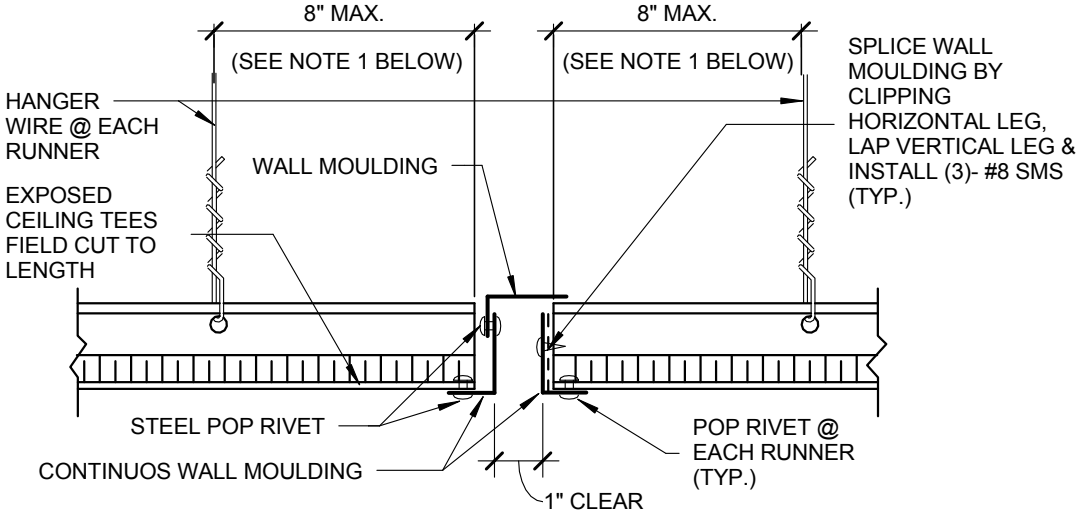

EXPANSION JOINT ALTERNATE

EXPANSION JOINTS AT THE INTERSECTION OF CORRIDORS AND AT JUNCTIONS OF CORRIDORS AND LOBBIES OR OTHER SIMILAR AREAS

NOTES:

1. PROVIDE #12 GAGE HANGER WIRES AT THE ENDS OF ALL MAIN AND CROSS RUNNERS WITHIN EIGHT (8) INCHES OF THE SUPPORT OR WITHIN ONE-FOURTH (1/4) OF THE LENGTH OF THE END TEE, WHICHEVER IS LESS, FOR THE PERIMETER OF THE CEILING AREA. PERIMETER WIRES ARE NOT REQUIRED WHEN THE LENGTH OF THE END TEE IS EIGHT (8) INCHES OR LESS.

Basis Document : **DSA IR 25-2.13**			Sheet No:
Sheet Title : **SUSPENDED ACOUSTICAL CEILING - EXPANSION JOINT AT INTERSECTIONS**	rev.	09-21-15	2.40

9/14/2015 2:16:03 PM

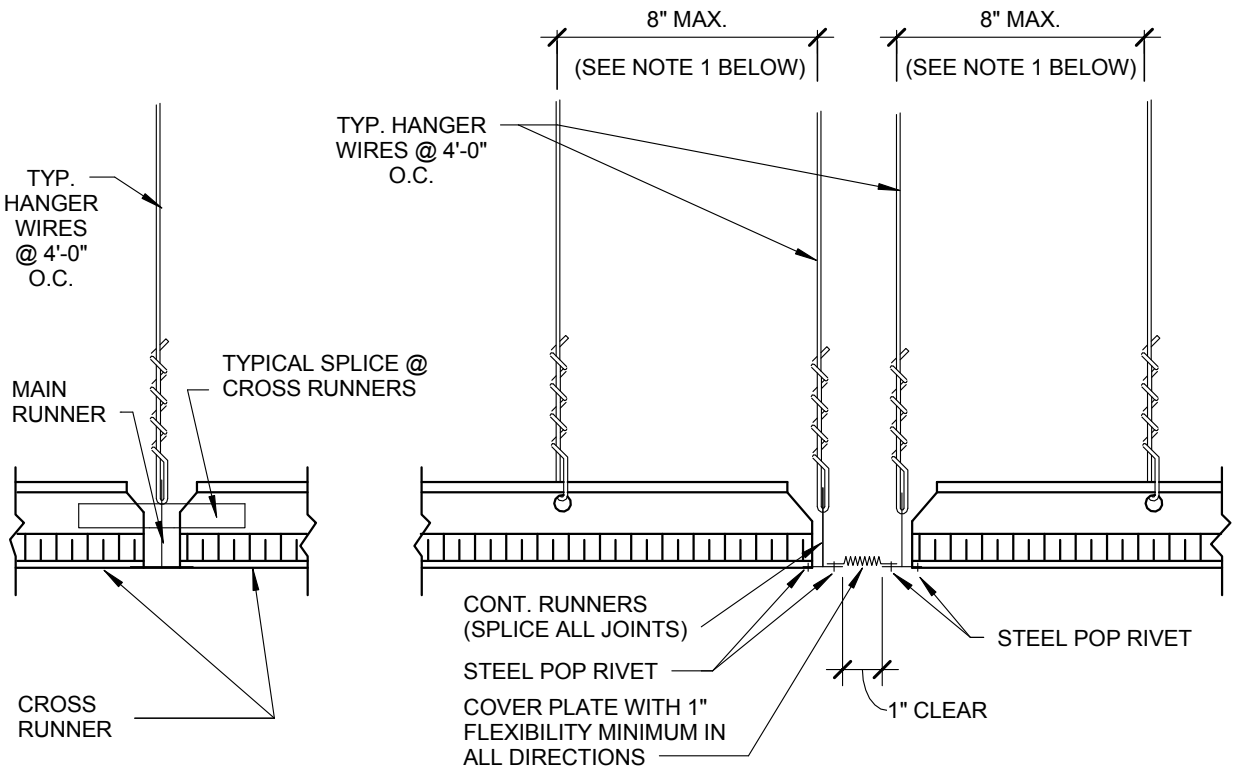

RUNNER SPLICE EXPANSION JOINT

EXPANSION JOINTS AT THE INTERSECTION OF CORRIDORS AND AT JUNCTIONS OF CORRIDORS AND LOBBIES OR OTHER SIMILAR AREAS

NOTES:

1. PROVIDE #12 GAGE HANGER WIRES AT THE ENDS OF ALL MAIN AND CROSS RUNNERS WITHIN EIGHT (8) INCHES OF THE SUPPORT OR WITHIN ONE-FOURTH (1/4) OF THE LENGTH OF THE END TEE, WHICHEVER IS LESS, FOR THE PERIMETER OF THE CEILING AREA. PERIMETER WIRES ARE NOT REQUIRED WHEN THE LENGTH OF THE END TEE IS EIGHT (8) INCHES OR LESS.

Basis Document : **DSA IR 25-2.13**			Sheet No:
Sheet Title : **SUSPENDED ACOUSTICAL CEILING - EXPANSION JOINT AT INTERSECTIONS (Essential Services Buildings)**	rev.	09-21-15	2.41

9/14/2015 2:16:03 PM

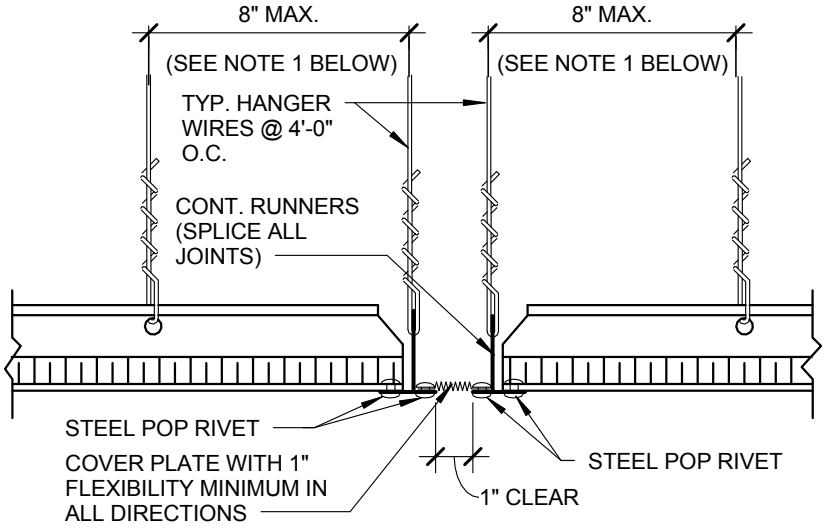

SEISMIC SEPARATION JOINT

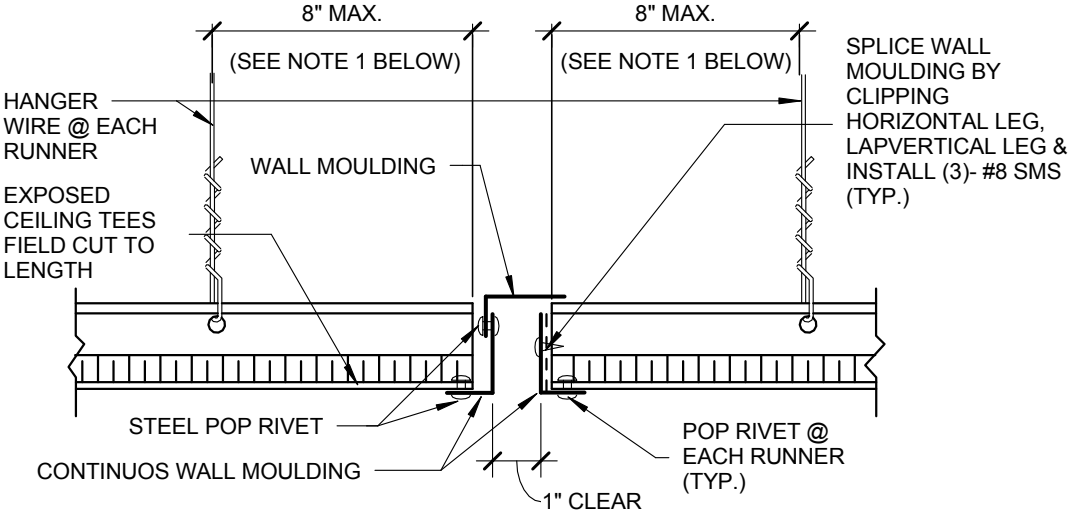

ALTERNATE SEISMIC SEPARATION JOINT

SEISMIC SEPARATION JOINT AT CONTINUOUS CEILING AREAS EXCEEDING 2500 SQ. FT. SEE CEILING PLANS FOR LOCATION

NOTES:

1. PROVIDE #12 GAGE HANGER WIRES AT THE ENDS OF ALL MAIN AND CROSS RUNNERS WITHIN EIGHT (8) INCHES OF THE SUPPORT OR WITHIN ONE-FOURTH (1/4) OF THE LENGTH OF THE END TEE, WHICHEVER IS LESS, FOR THE PERIMETER OF THE CEILING AREA. PERIMETER WIRES ARE NOT REQUIRED WHEN THE LENGTH OF THE END TEE IS EIGHT (8) INCHES OR LESS.

Basis Document : **DSA IR 25-2.13**			Sheet No:
Sheet Title : **SUSPENDED ACOUSTICAL CEILING - SEISMIC SEPARATION JOINT**	rev.	09-21-15	2.45

9/14/2015 2:16:03 PM

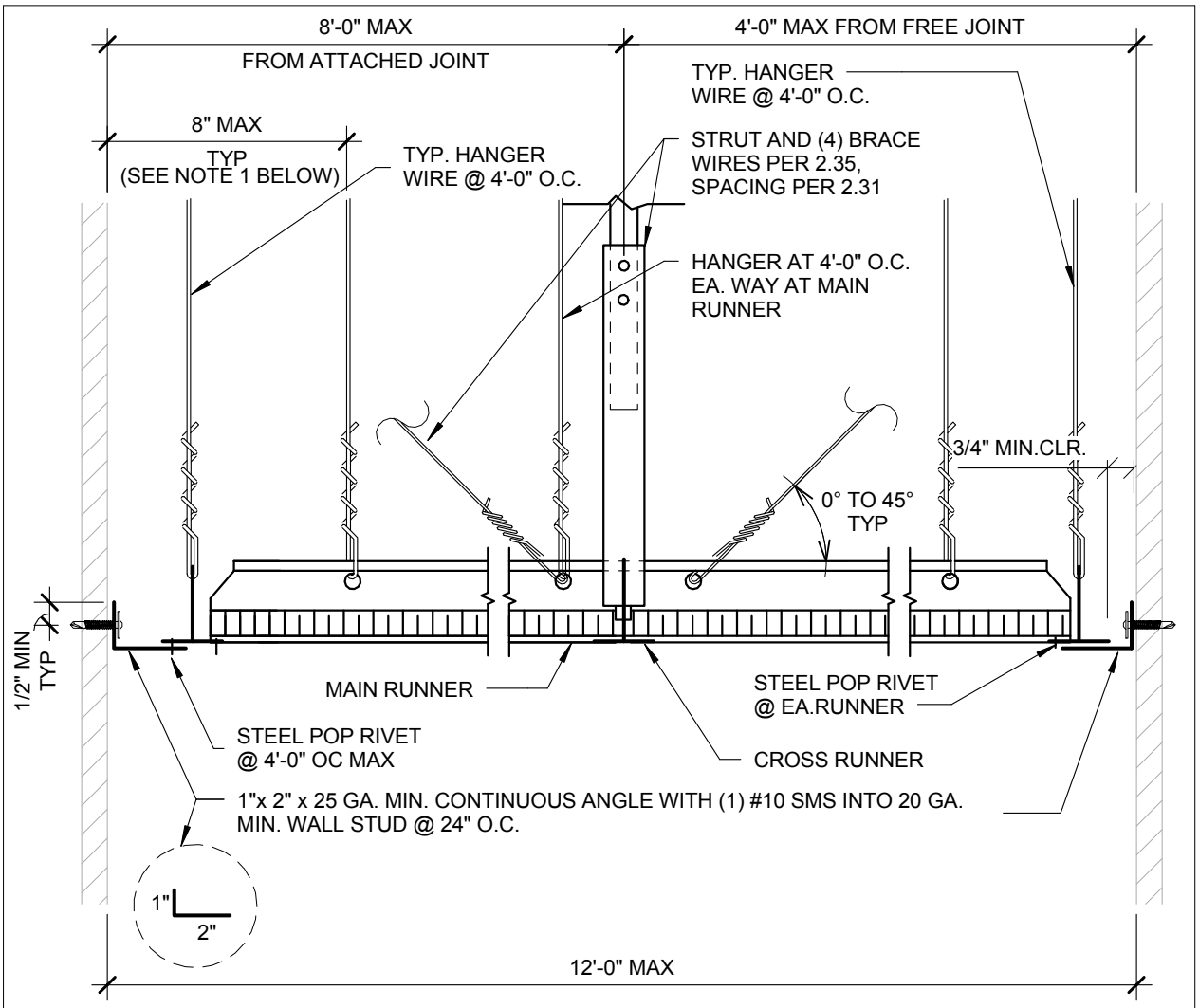

ATTACHED JOINT **FREE JOINT**

EXITWAY CORRIDOR DETAILS

NOTES:

1. PROVIDE #12 GAGE HANGER WIRES AT THE ENDS OF ALL MAIN AND CROSS RUNNERS WITHIN EIGHT (8) INCHES OF THE SUPPORT OR WITHIN ONE-FOURTH (1/4) OF THE LENGTH OF THE END TEE, WHICHEVER IS LESS, FOR THE PERIMETER OF THE CEILING AREA. PERIMETER WIRES ARE NOT REQUIRED WHEN THE LENGTH OF THE END TEE IS EIGHT (8) INCHES OR LESS.

Basis Document : **DSA IR 25-2.13**			Sheet No:
Sheet Title : **TYPICAL CEILING SECTION AT EXITWAY CORRIDORS (Essential Services Buildings)**	rev.	09-21-15	2.50

3/10/2017 11:34:43 AM

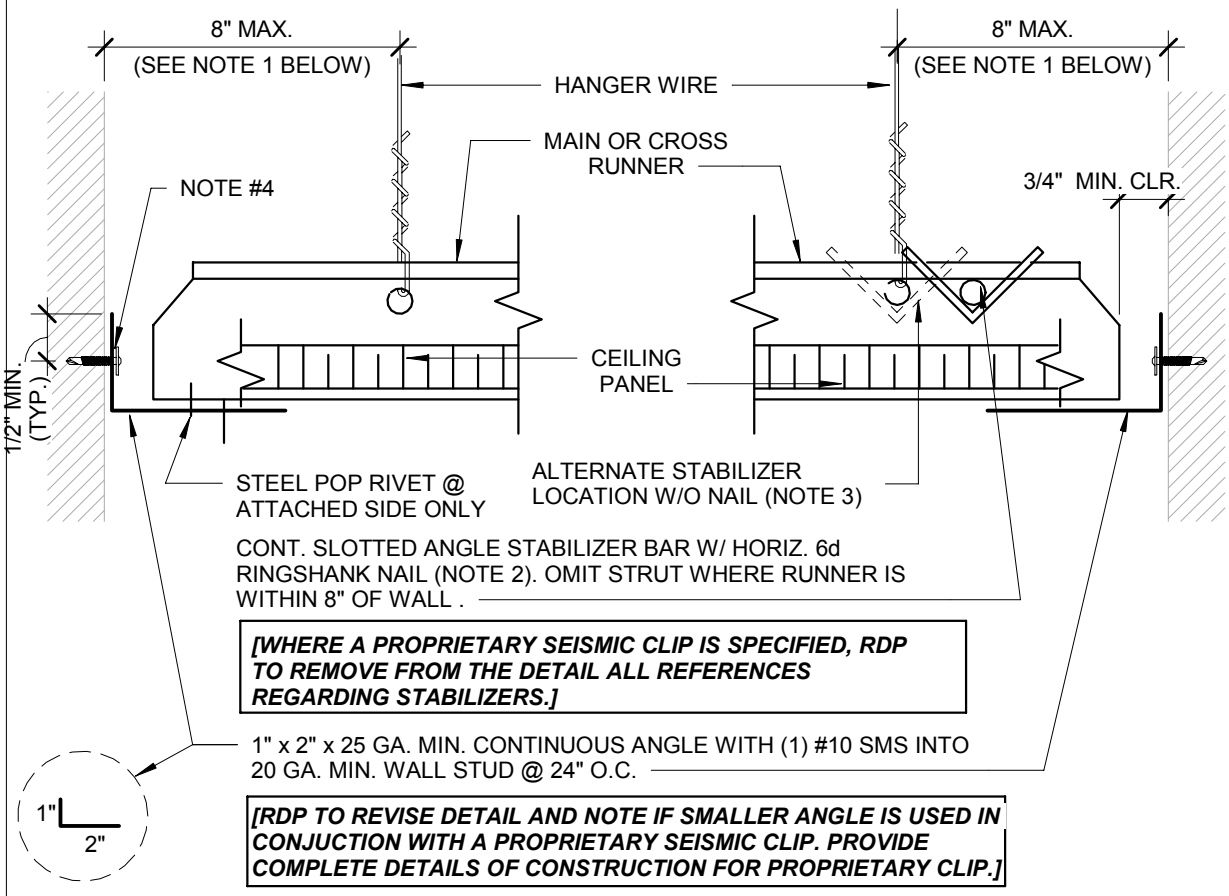

ATTACHED JOINT **FREE JOINT**

NOTES:

1. PROVIDE #12 GAGE HANGER WIRES AT THE ENDS OF ALL MAIN AND CROSS RUNNERS WITHIN EIGHT (8) INCHES OF THE SUPPORT OR WITHIN ONE-FOURTH (1/4) OF THE LENGTH OF THE END TEE, WHICHEVER IS LESS, FOR THE PERIMETER OF THE CEILING AREA. PERIMETER WIRES ARE NOT REQUIRED WHEN THE LENGTH OF THE END TEE IS EIGHT (8) INCHES OR LESS.
2. NAILS AT ENDS OF HORIZONTAL STABILIZERS ARE TO BE PLACED WITH NAIL HEAD TOWARD CENTER LINE OF SPAN OF STRUT.
3. STABILIZER BAR MAY BE SLOTTED APPROVED ANGLES OR CHANNELS WITH "DIAMOND POINTS" OF SPRING STEEL WHICH SNAP TIGHT TO PREVENT MOVEMENT OF STRUT.
4. (1) #10 SMS TO 20 GA. MIN. WALL STUD @ 24" O.C.

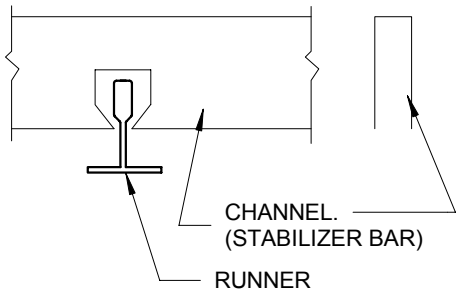

APPROVED STABILIZER

(SEE NOTE 3)

Basis Document : **DSA IR 25-2.13**			Sheet No:
Sheet Title : **CEILING PERIMETER**	rev.	09-21-15	2.60
	rev.	03-10-17	

2/10/2016 10:42:51 AM

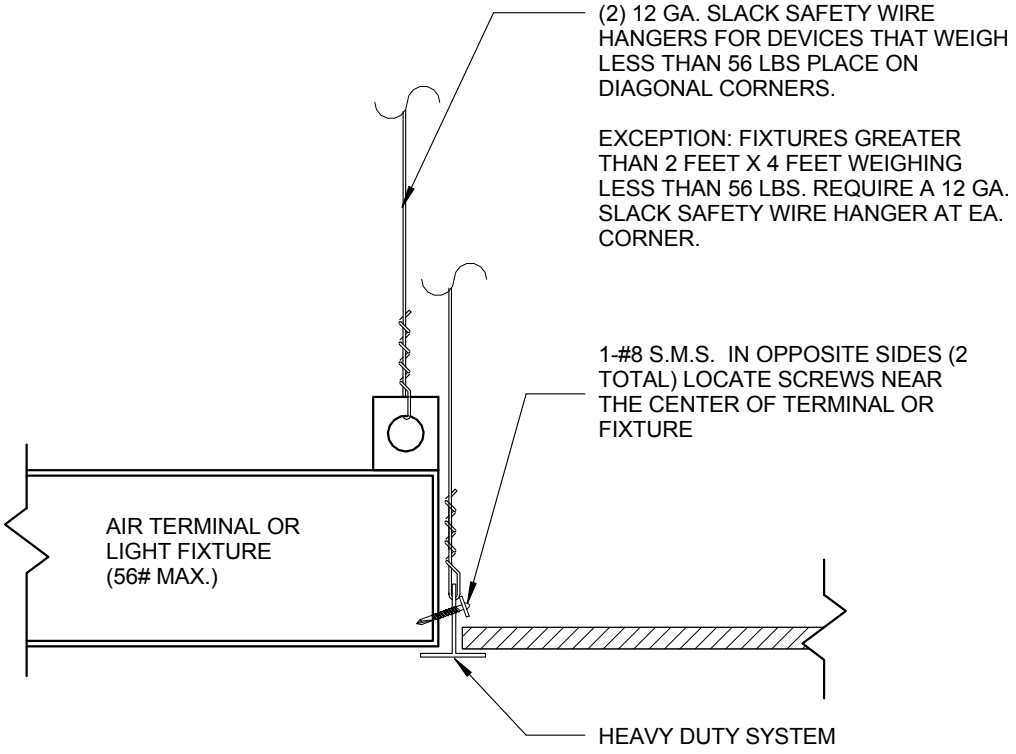

Basis Document : **DSA IR 25-2.13**			Sheet No:
Sheet Title : **SUSPENDED ACOUSTICAL CEILING - LIGHT FIXTURES/ AIR TERMINAL SUPPORT DETAIL**	rev.	09-21-15	2.80
	rev.	02-10-16	

9/14/2015 2:16:04 PM

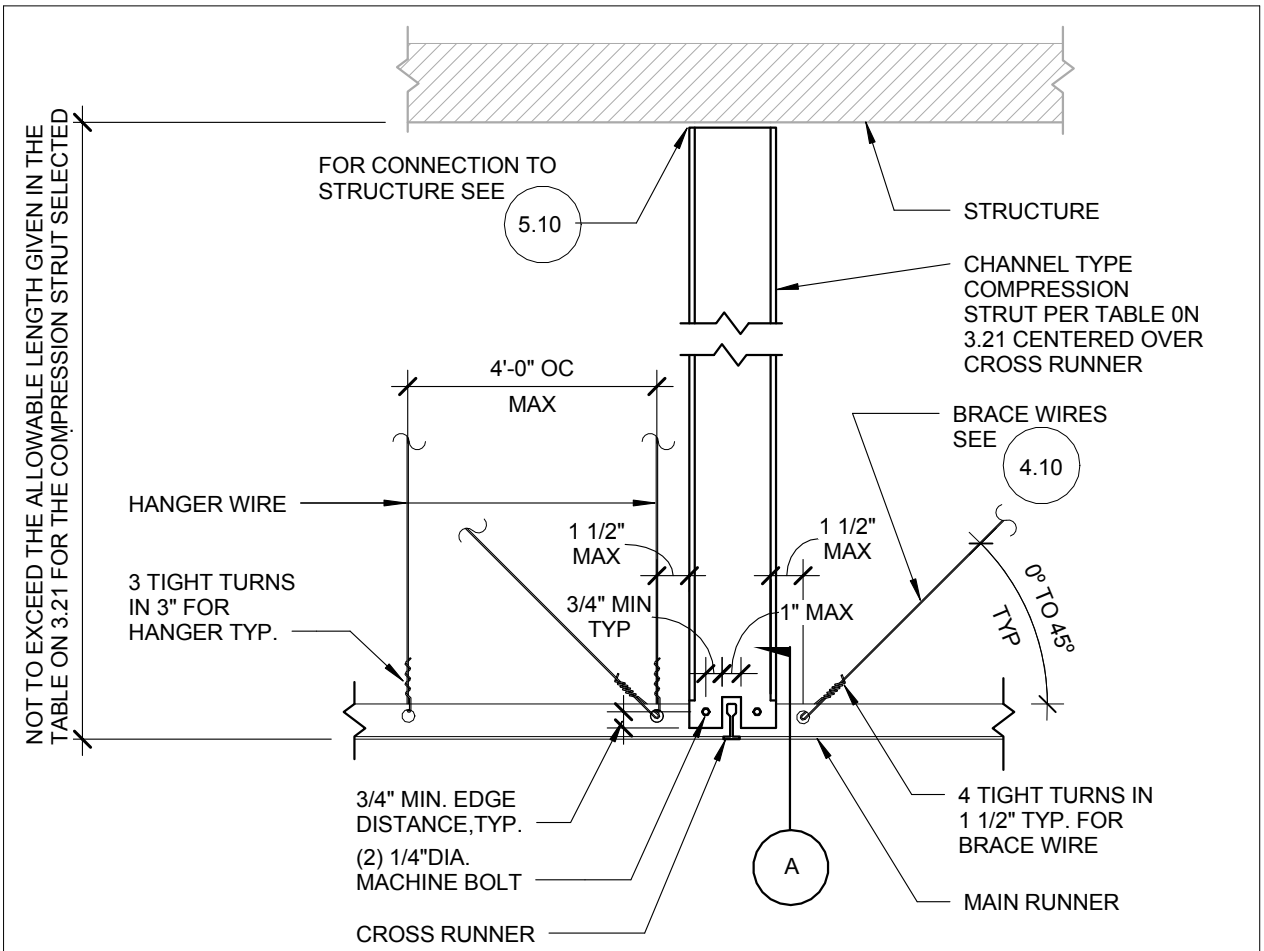

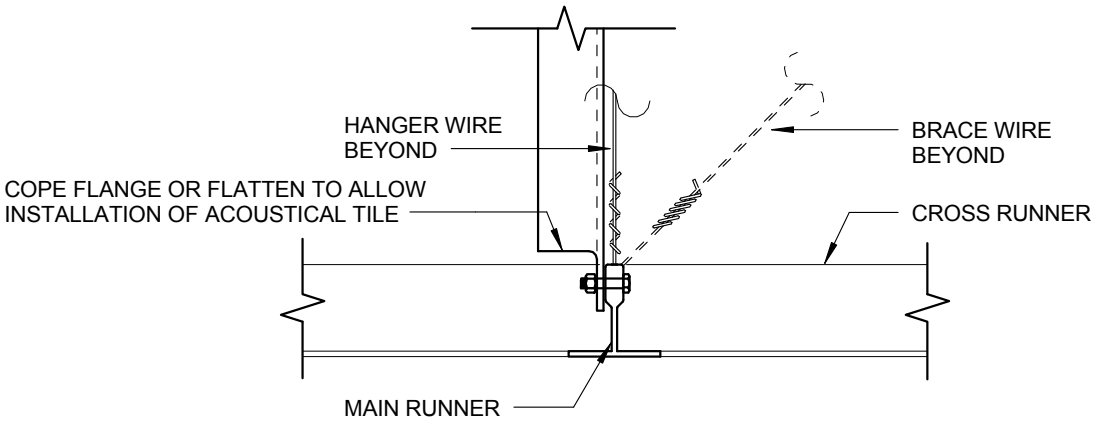

A SECTION

3" = 1'-0"

Basis Document : **DSA IR 25-2.13**			Sheet No:
Sheet Title : **SUSPENDED ACOUSTICAL CEILING - CHANNEL TYPE STRUT**	rev.	09-21-15	3.10

9/14/2015 2:16:04 PM

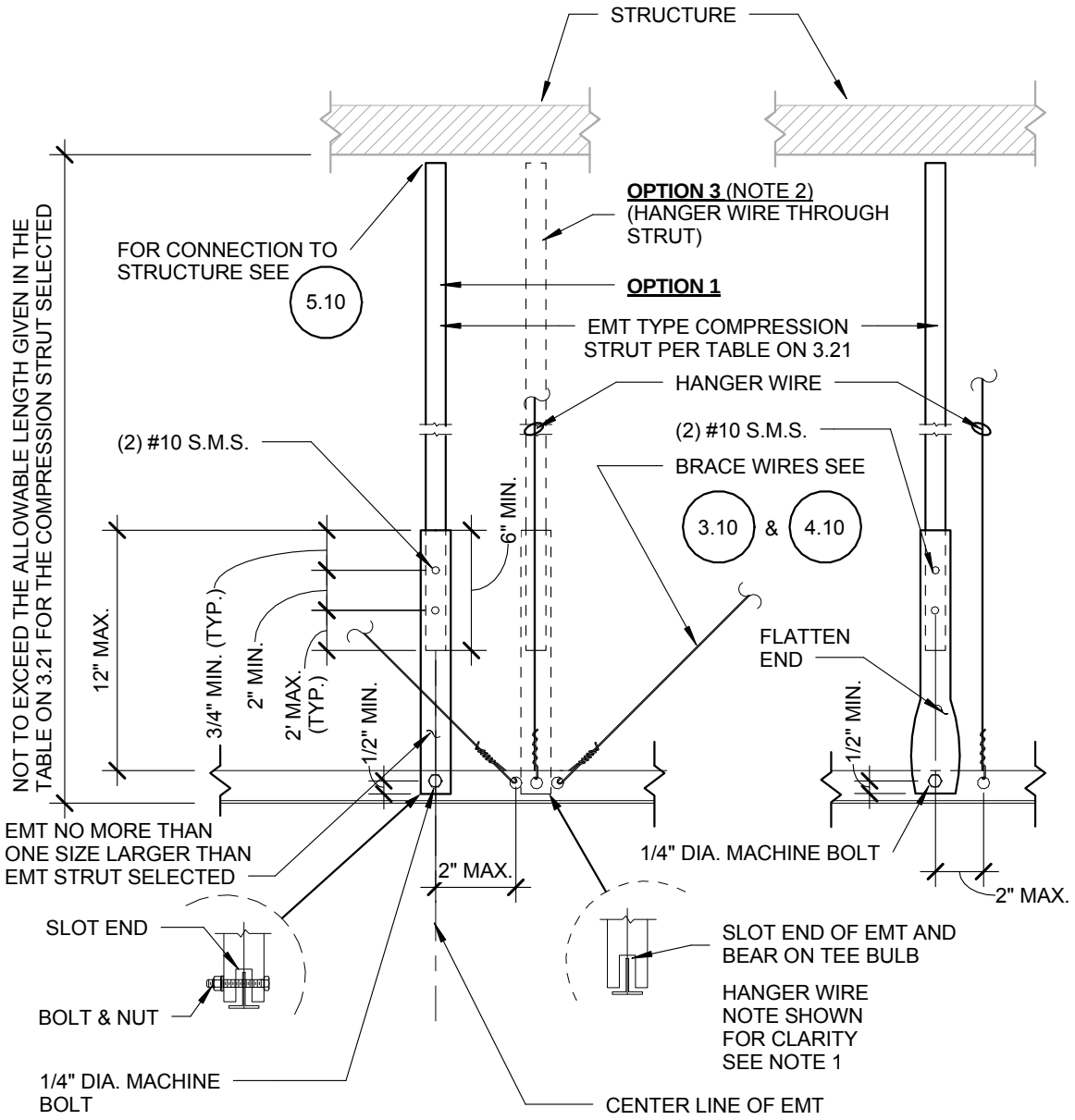

OPTION 1 & 3

OPTION 2

SEE OPTION 1 FOR INFORMATION NOT SHOWN

NOTES:

1. MACHINE BOLT IS NOT REQUIRED ON OPTION 3

2. APPLICABLE TO SAWN TIMBER WITHOUT GYPSUM BOARD ONLY.

Basis Document : **DSA IR 25-2.13**			Sheet No:
Sheet Title : **SUSPENDED ACOUSTICAL CEILING - EMT TYPE STRUT**	rev.	09-21-15	3.20

3/10/2017 11:34:43 AM

COMPRESSION STRUT TABLE

EMT COMPRESSION STRUT	MAXIMUM LENGTH
1/2" DIAMETER EMT (0.042" WALL THICKNESS)	3'-11"
3/4" DIAMETER EMT (0.049" WALL THICKNESS)	6'-4"
1" DIAMETER EMT (0.057" WALL THICKNESS)	9'-9"
1 1/4" DIAMETER EMT (0.065" WALL THICKNESS)	12'-9"
1 1/2" DIAMETER EMT (0.065" WALL THICKNESS)	14'-9"
2" DIAMETER EMT (0.065" WALL THICKNESS)	18'-10"

CHANNEL COMPRESSION STRUT	MAXIMUM LENGTH
250S125-33	5'-0"
250S137-33	6'-10"
362S137-33	8'-0"
250137-43	8'10"
400S137-43	10'-10"

Basis Document : **DSA IR 25-2.13**			Sheet No:
Sheet Title : **COMPRESSION STRUT TABLE**	rev.	09-21-15	3.21
	rev.	03-10-17	

9/14/2015 2:16:04 PM

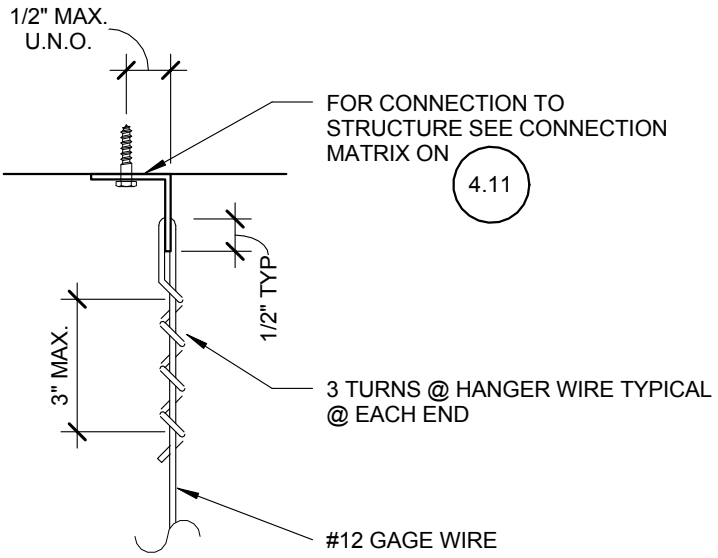

HANGER WIRE

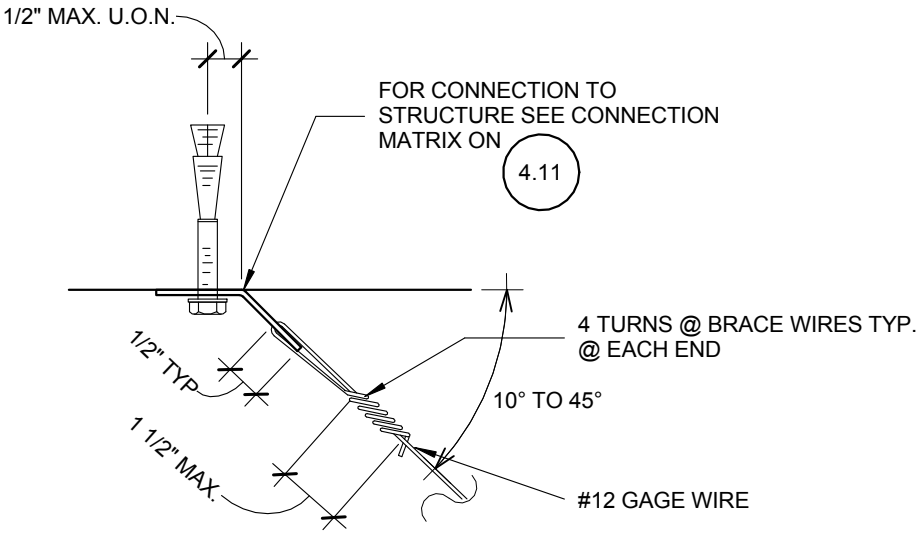

BRACING WIRE

Basis Document : **DSA IR 25-2.13**			Sheet No:
Sheet Title : **HANGER AND BRACING WIRE CONNECTION - TYPICAL WIRE TURNS**	rev.	09-21-15	4.10

9/14/2015 2:16:04 PM

STRUCTURAL CONDITION OF FLOOR/ ROOF ABOVE SUSPENDED CEILING	APPLICABLE HANGER WIRE DETAIL	APPLICABLE BRACING WIRE DETAIL
METAL DECK	4.20	4.30
CONCRETE OVER METAL DECK	4.21	4.31
CONCRETE SLAB, BEAM, OR JOIST	4.22	4.32
STRUCTURAL STEEL	4.23	4.33
METAL STUD WALL	4.24	4.34
SAWN TIMBER	4.25, 4.29	4.35
WOOD I JOIST	4.26	4.36, 4.37
WOOD CHORD TRUSS	4.27, 4.29	4.38, 4.29
OPEN WEB STEEL JOIST	4.28, 4.29	4.39, 4.29

Basis Document : **DSA IR 25-2.13**

Sheet Title : **HANGER AND BRACING WIRE CONNECTION MATRIX**

rev.	09-21-15

Sheet No: 4.11

9/14/2015 2:16:05 PM

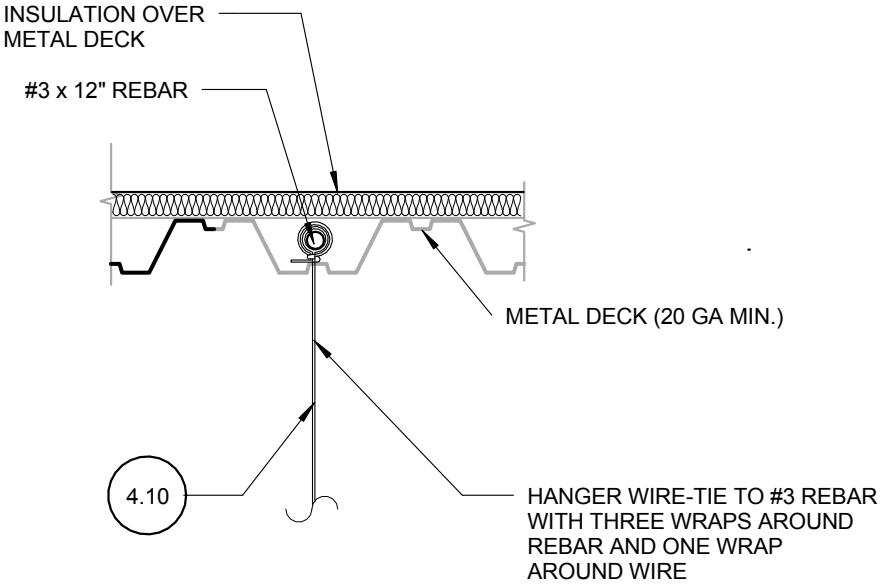

NOTES:

1. REFER TO 4.10 FOR ADDITIONAL DETAILS.

.

Basis Document : **DSA IR 25-2.13**			Sheet No:
Sheet Title : **HANGER WIRE CONNECTION TO METAL DECK**	rev.	09-21-15	4.20

9/14/2015 2:16:05 PM

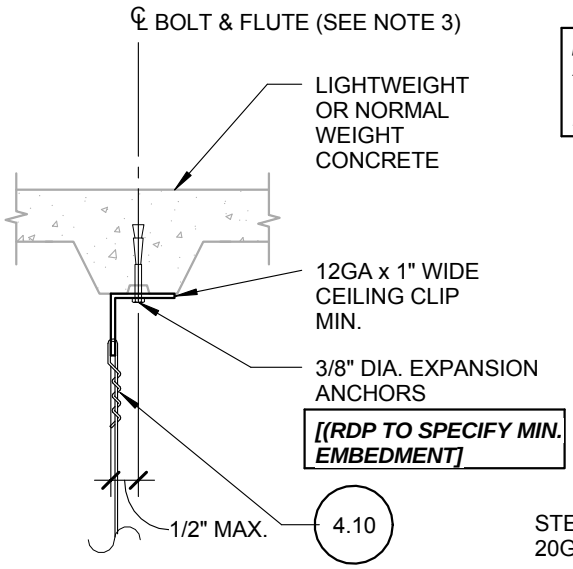

OPTION 1

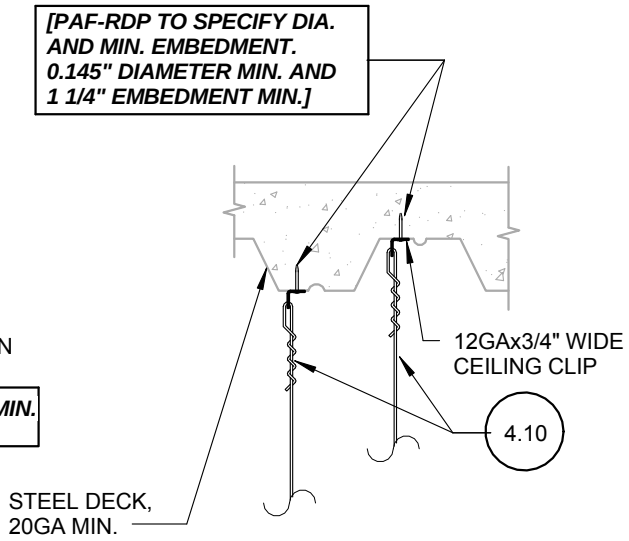

OPTION 2

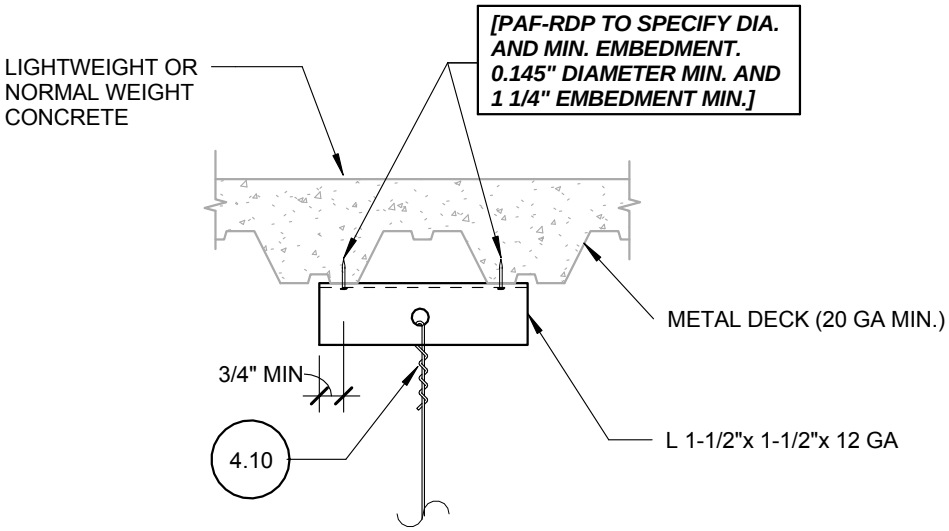

OPTION 3

NOTES:

1. REFER TO 4.10 FOR ADDITIONAL DETAILS.
2. POST INSTALLED ANCHORS TO BE PLACED NO MORE THAN 1" OFFSET FROM CENTERLINE OF DECK LOW FLUTE
3. TEST POST INSTALLED ANCHORS IN ACCORDANCE WITH CEILING NOTE 5.01.

Basis Document : **DSA IR 25-2.13**			Sheet No:
Sheet Title : **HANGER WIRE CONNECTION TO CONCRETE OVER METAL DECK**	rev.	09-21-15	4.21

9/14/2015 2:16:05 PM

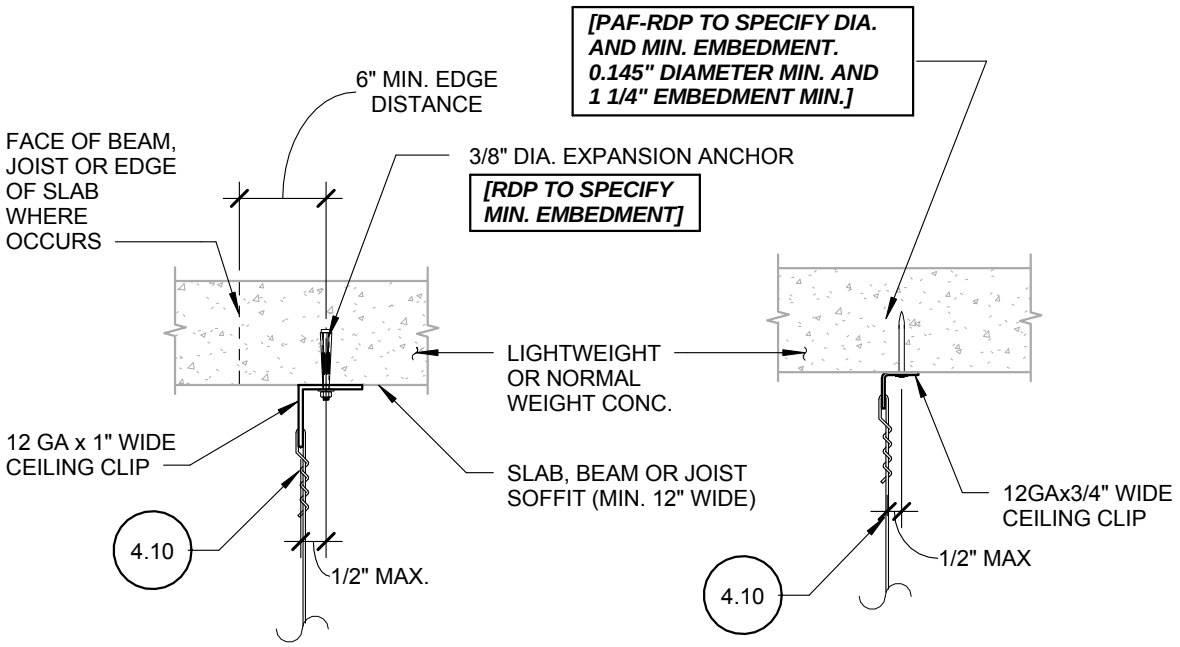

OPTION 1 **OPTION 2**

NOTES:

1. REFER TO 4.10 FOR ADDITIONAL DETAILS

2. TEST POST INSTALLED ANCHORS IN ACCORDANCE WITH CEILING NOTE 5.01.

Basis Document : **DSA IR 25-2.13**			Sheet No:
Sheet Title : **HANGER WIRE CONNECTION TO CONCRETE SLAB, BEAM, OR JOIST**	rev.	09-21-15	4.22

9/14/2015 2:16:05 PM

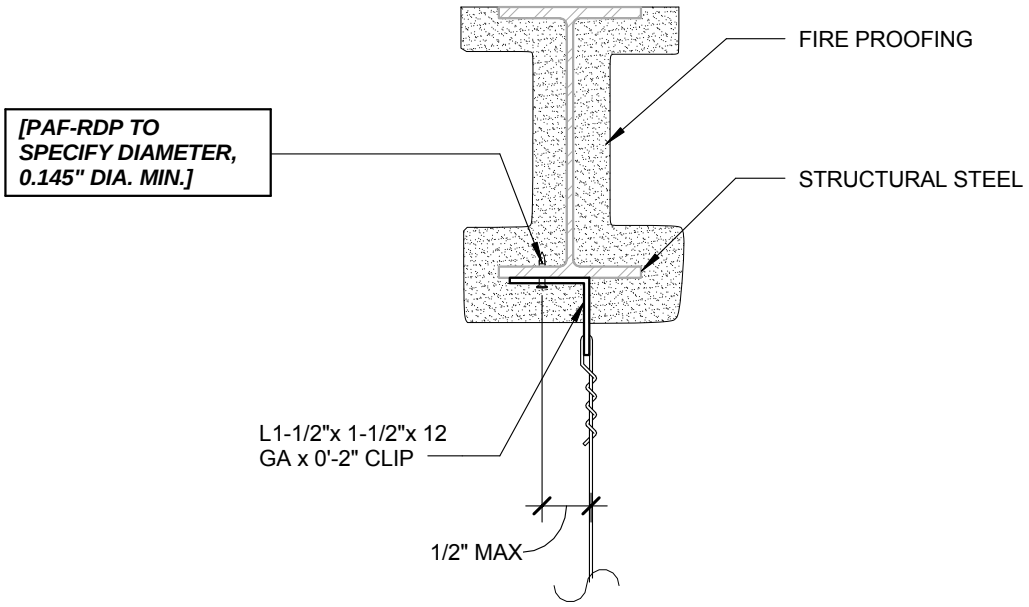

HANGER WIRE

NOTES :

1. BEAM FLANGE THICKNESS SHALL NOT BE LESS THAN 3/16".
2. RDP IN RESPONSIBLE CHARGE, IOR AND CONTRACTOR SHALL VERIFY THAT NO PAF IS INSTALLED IN THE PROTECTED ZONE OF ANY STEEL MEMBER. SEE ANSI/AISC 341-10
3. REFER TO 4.10 FOR ADDITIONAL DETAILS

Basis Document : **DSA IR 25-2.13**			Sheet No:
Sheet Title : **HANGER WIRE CONNECTION TO STRUCTURAL STEEL**	rev.	09-21-15	4.23

9/14/2015 2:16:05 PM

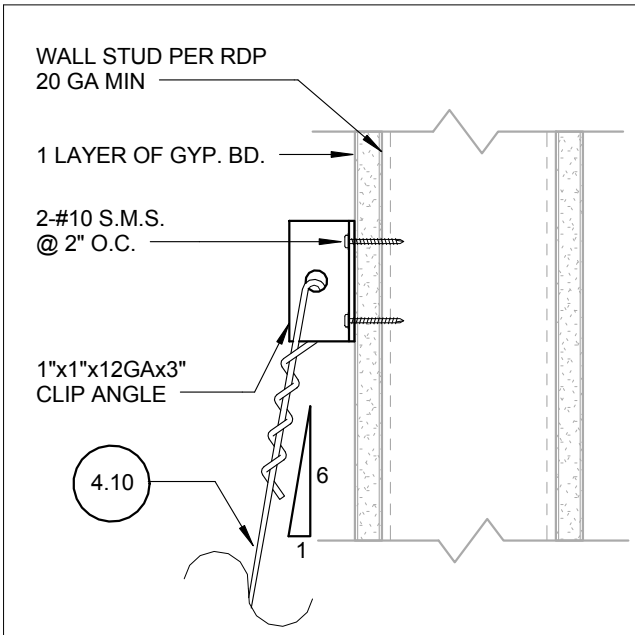

OPTION 1

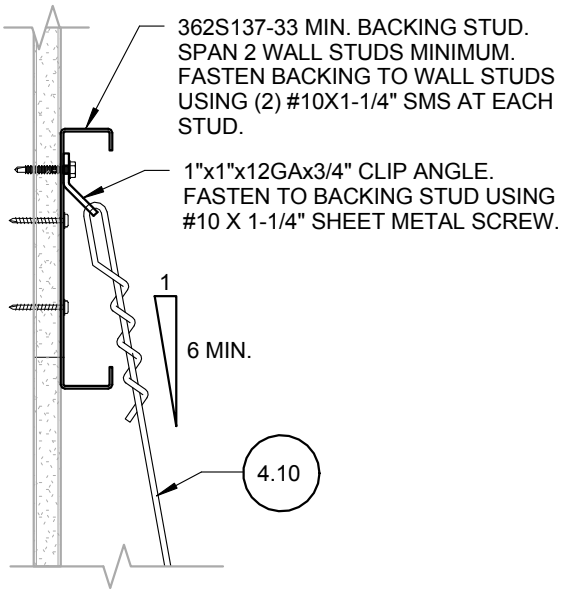

OPTION 2

NOTES:

1. THIS IS APPLIED FOR PERIMETER WIRE ATTACHEMENT OR WHERE OBSTRUCTION PREVENTS ATTACHMENT TO STRUCTURE ABOVE

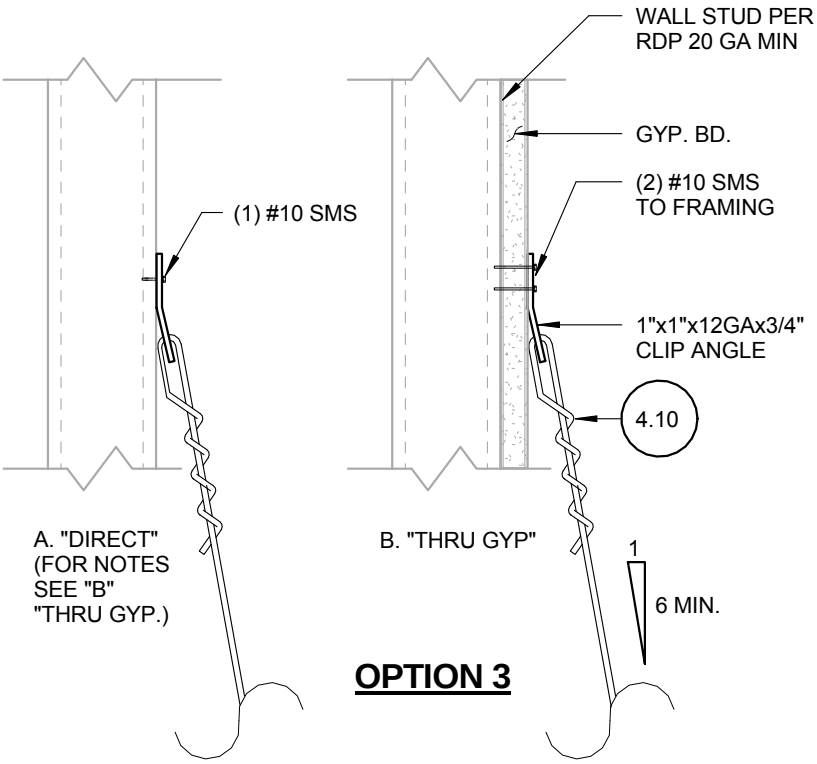

OPTION 3

Basis Document : **DSA IR 25-2.13**			Sheet No:
Sheet Title : **HANGER WIRE CONNECTION TO METAL STUD WALL**	rev.	09-21-15	4.24

9/14/2015 2:16:05 PM

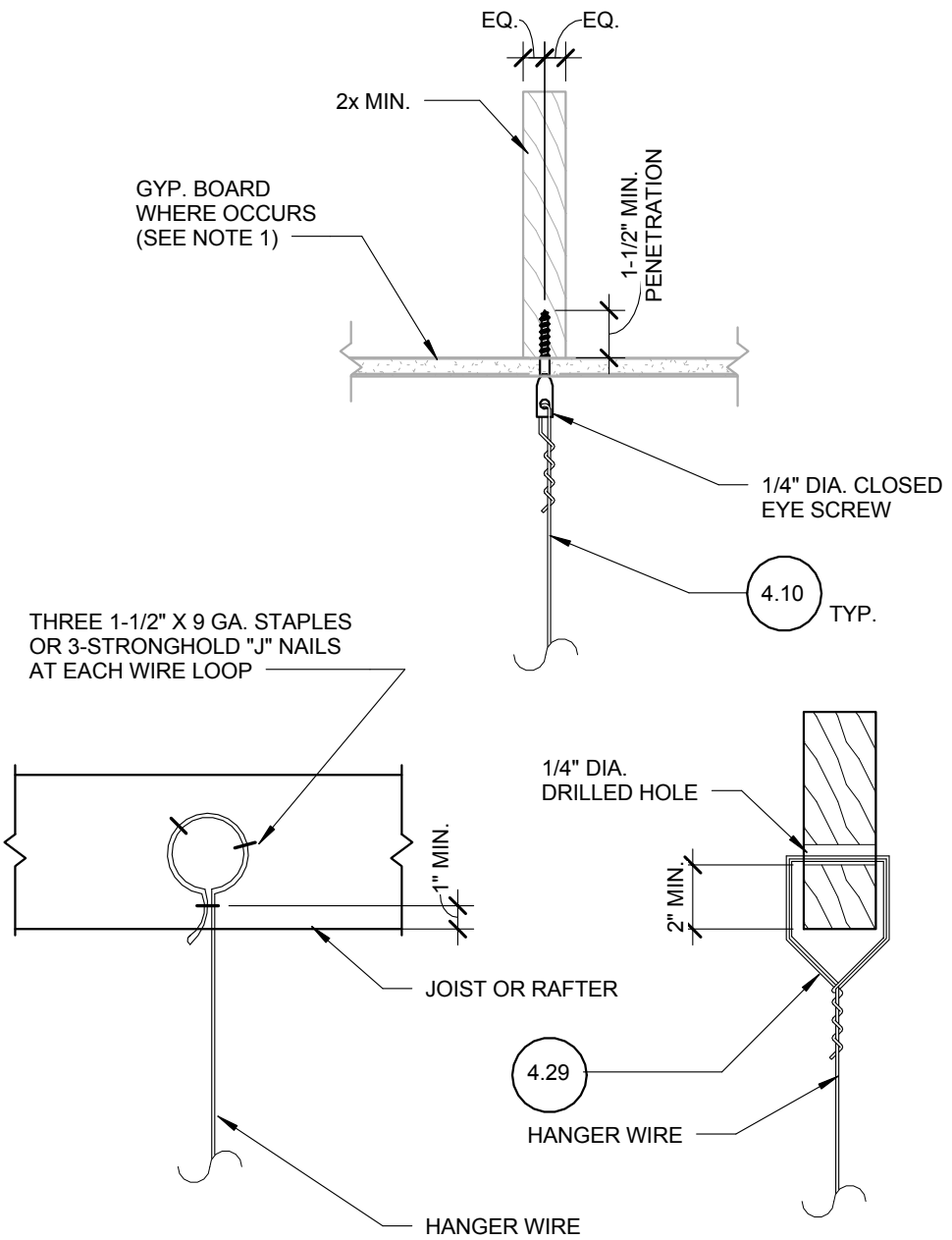

NOTE:

(1) WHEN FIRE RATED GYP. BOARD IS INSTALLED ON THE BOTTOM FLANGES, USE SCREW EYES W/ SUFFICIENT LENGTH TO AVOID DAMAGING THE FIRE RATED GYP. BOARD AND MEET MIN. PENETRATION.

Basis Document : **DSA IR 25-2.13**			Sheet No:
Sheet Title : **HANGER WIRE CONNECTION TO SAWN TIMBER**	rev.	09-21-15	4.25

9/14/2015 2:16:05 PM

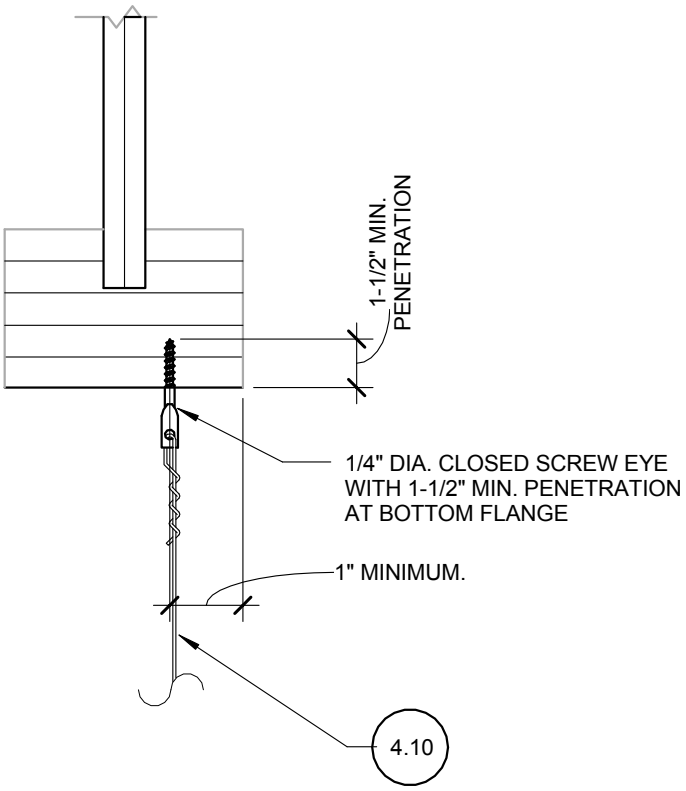

NOTE:

(1) WHEN FIRE RATED GYP. BOARD IS INSTALLED ON THE BOTTOM FLANGES, USE SCREW EYES W/ SUFFICIENT LENGTH TO AVOID DAMAGING THE FIRE RATED GYP. BOARD AND MEET MIN. PENETRATION.

Basis Document : **DSA IR 25-2.13**			Sheet No:
Sheet Title : **HANGER WIRE CONNECTION TO WOOD I JOIST**	rev.	09-21-15	4.26

9/14/2015 2:16:05 PM

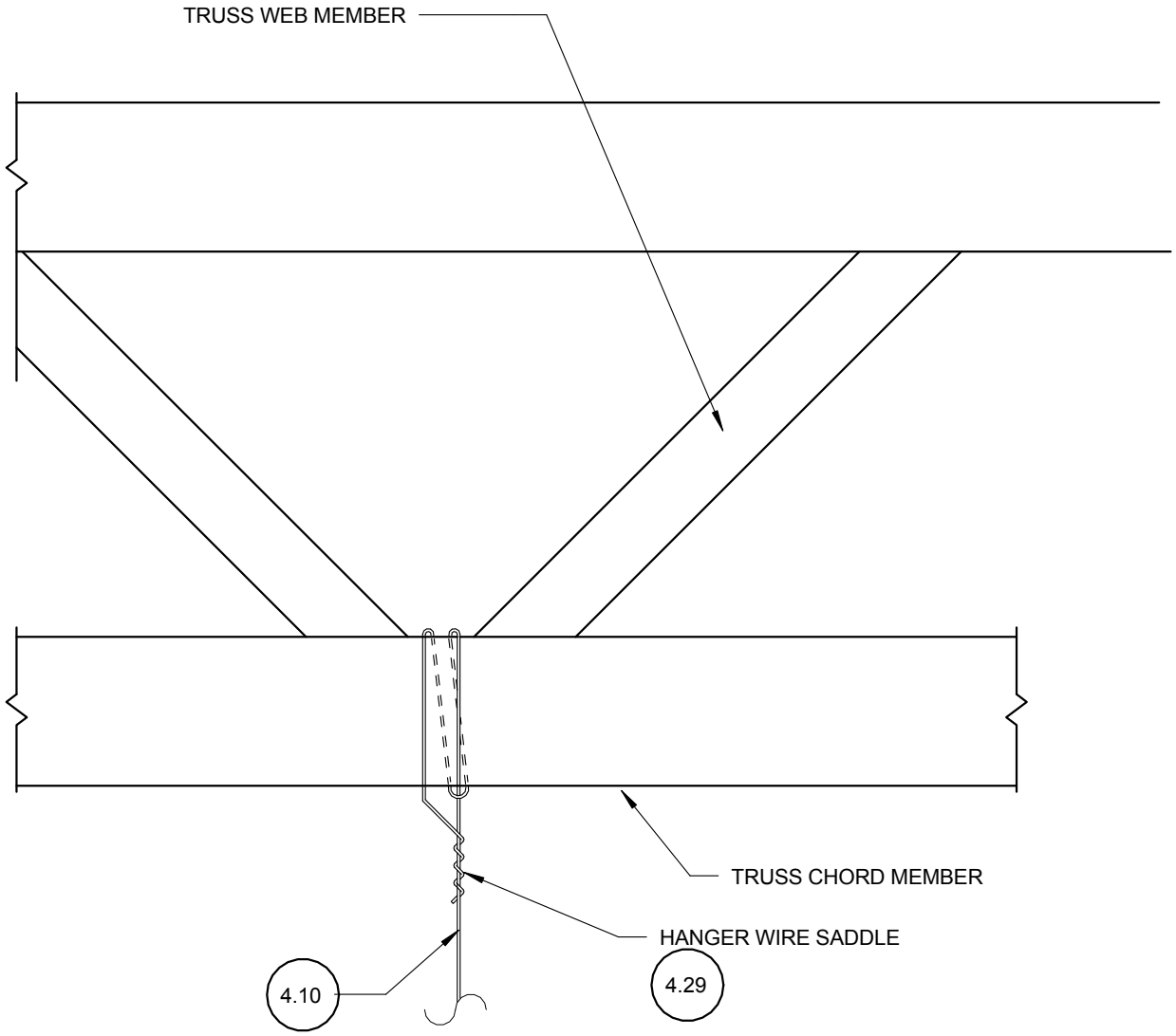

Basis Document : **DSA IR 25-2.13**			Sheet No:
Sheet Title : **HANGER WIRE CONNECTION TO WOOD CHORD TRUSS**	rev.	09-21-15	4.27

9/14/2015 2:16:06 PM

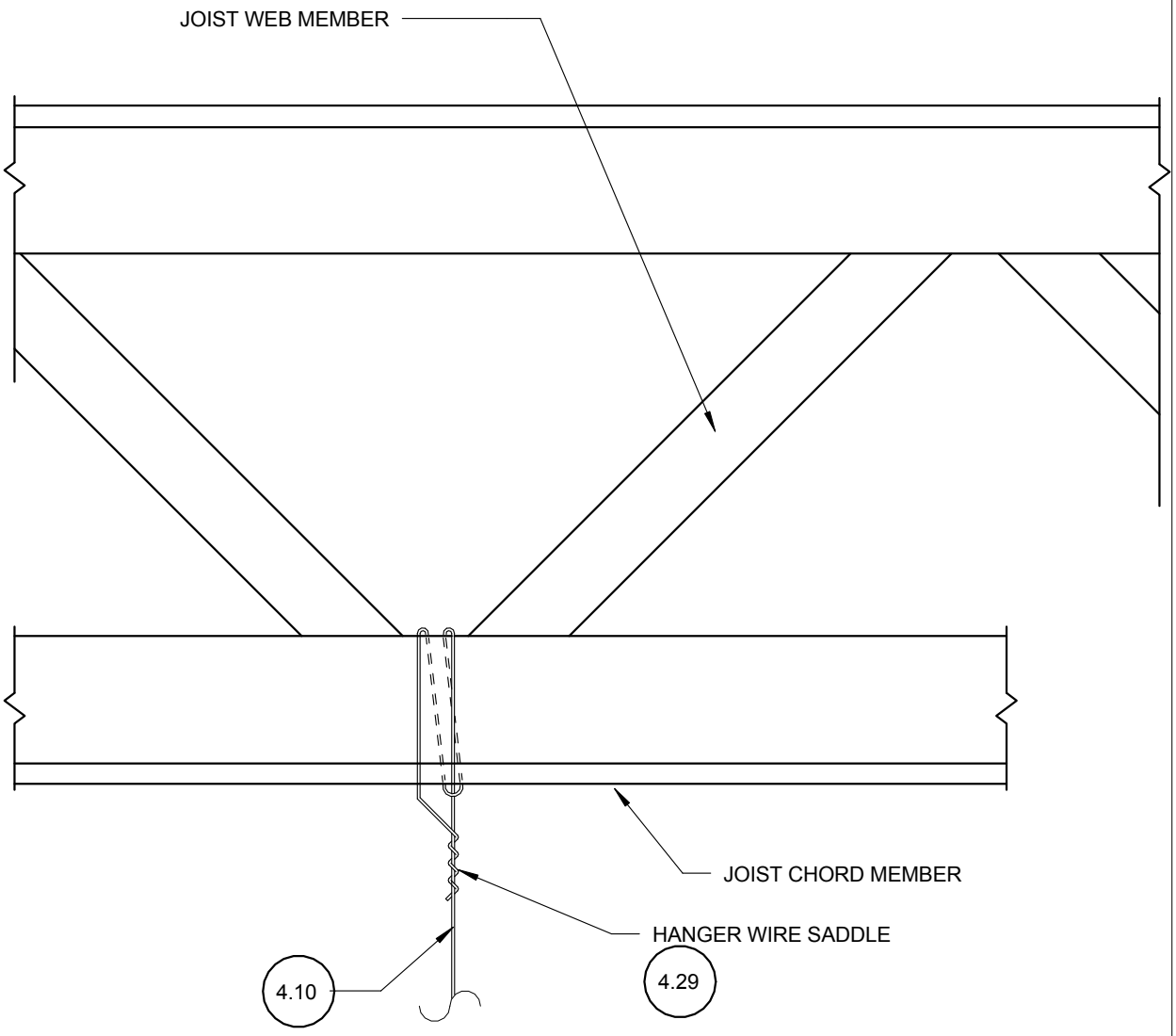

Basis Document : **DSA IR 25-2.13**			Sheet No:
Sheet Title : **HANGER WIRE CONNECTION TO OPEN WEB STEEL JOIST**	rev.	09-21-15	4.28

9/14/2015 2:16:06 PM

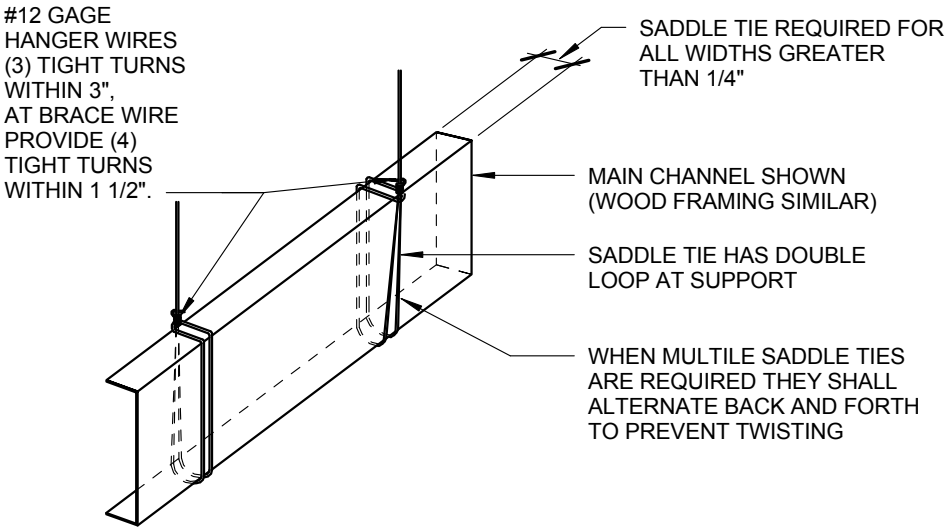

TYPICAL SADDLE TIE DETAIL

HANGER WIRE CONDITION SHOWN. BRACE
WIRE CONDITION SIMILAR

Basis Document : **DSA IR 25-2.13**			Sheet No:
Sheet Title : **TYPICAL SADDLE TIE DETAIL**	rev.	09-21-15	4.29

9/14/2015 2:16:06 PM

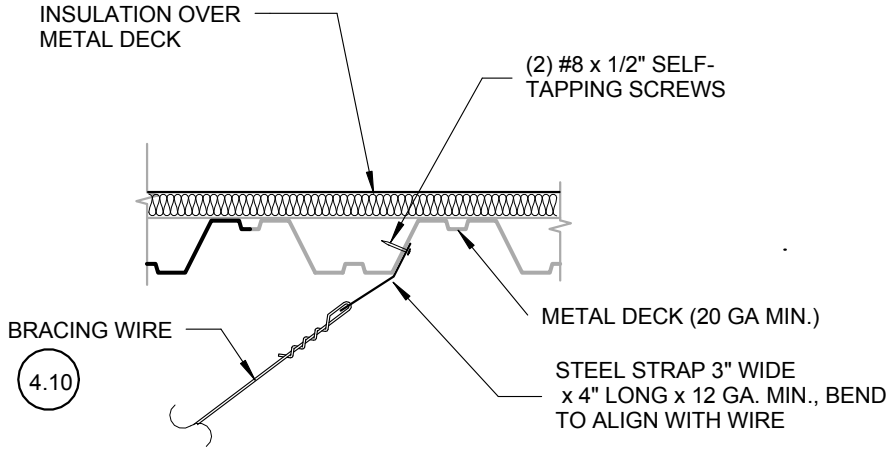

NOTES:

1. IF SELF-TAPPING SCREWS ARE USED WITH CONCRETE FILL, SET SCREWS BEFORE PLACING CONCRETE.

.

Basis Document : **DSA IR 25-2.13**			Sheet No:
Sheet Title : **BRACING WIRE CONNECTION AT METAL DECK**	rev.	09-21-15	4.30

9/14/2015 2:16:06 PM

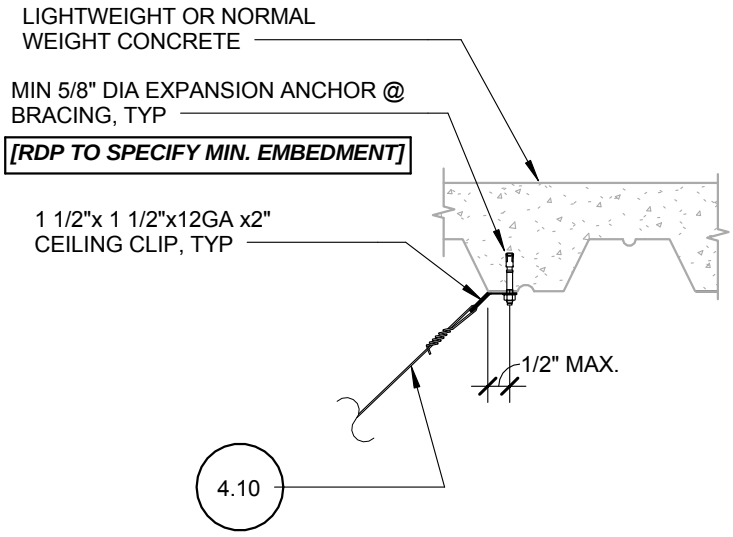

OPTION 1

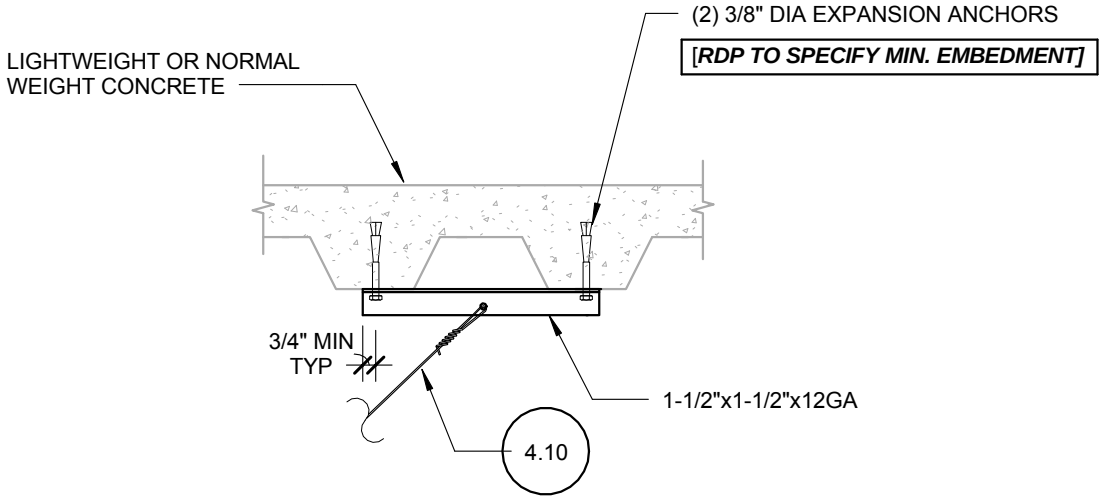

OPTION 2

NOTES:

1. TEST POST INSTALLED ANCHORS IN ACCORDANCE WITH CEILING NOTE 5.02
2. REFER TO 4.10 FOR ADDITIONAL DETAILS
3. POST INSTALLED ANCHORS TO BE PLACED NO MORE THAN 1" OFFSET FROM CENTERLINE OF DECK LOW FLUTE.

Basis Document : **DSA IR 25-2.13**			Sheet No:
Sheet Title : **BRACING WIRE CONNECTION TO CONCRETE OVER METAL DECK**	rev.	09-21-15	4.31

10/22/2015 9:44:17 AM

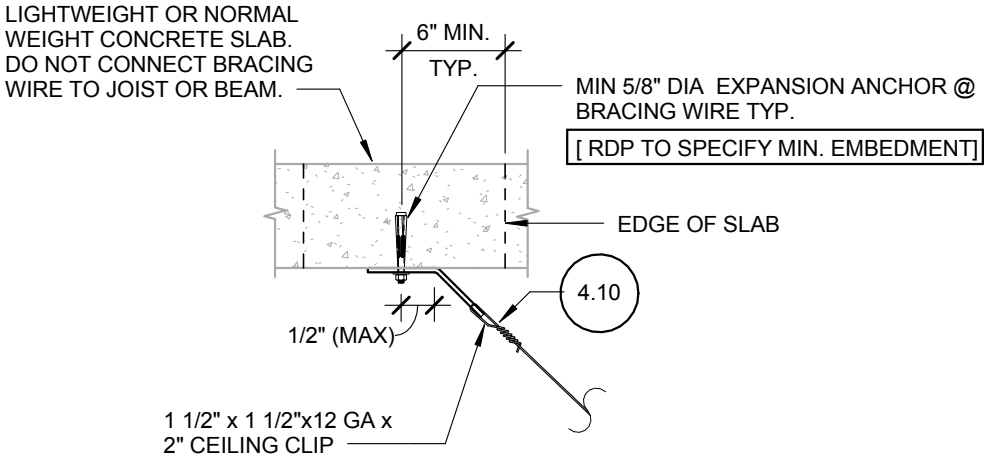

NOTES:

1. TEST POST INSTALLED ANCHORS IN ACCORDANCE WITH CEILING NOTE 5.02

2. REFER TO 4.10 FOR ADDITIONAL DETAILS

Basis Document : **DSA IR 25-2.13**			Sheet No:
Sheet Title : **BRACING WIRE CONNECTION TO CONCRETE SLAB, BEAM OR JOIST**	rev.	09-21-15	4.32

9/14/2015 2:16:06 PM

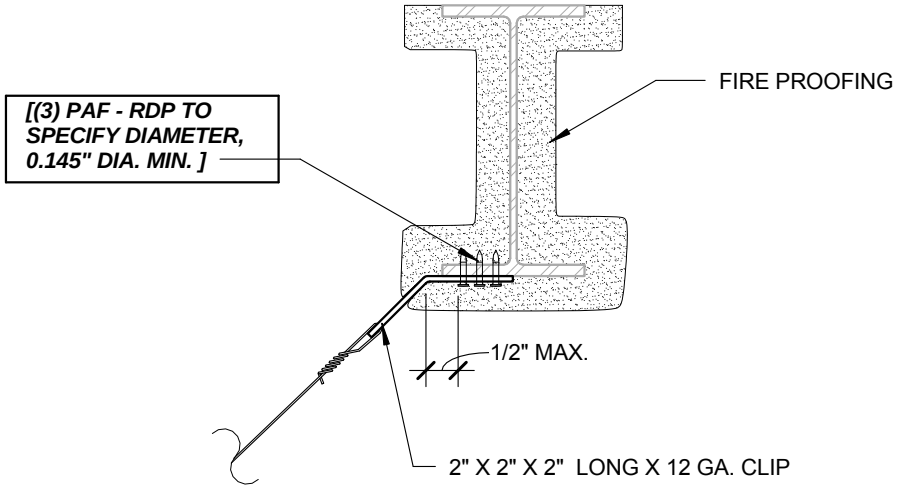

BRACING WIRE

NOTES :

1. BEAM FLANGE THICKNESS SHALL NOT BE LESS THAN 3/16".

2.RDP IN RESPONSIBLE CHARGE, IOR, AND CONTRACTOR SHALL VERIFY THAT NO PAF IS INSTALLED IN THE PROTECTED ZONE OF ANY STEEL MEMBER. SEE ANSI/AISC 341-10

3. REFER TO 4.10 FOR ADDITIONAL DETAILS

Basis Document : **DSA IR 25-2.13**			Sheet No:
Sheet Title : **BRACING WIRE CONNECTION TO STRUCTURAL STEEL**	rev.	09-21-15	4.33

3/10/2017 11:34:43 AM

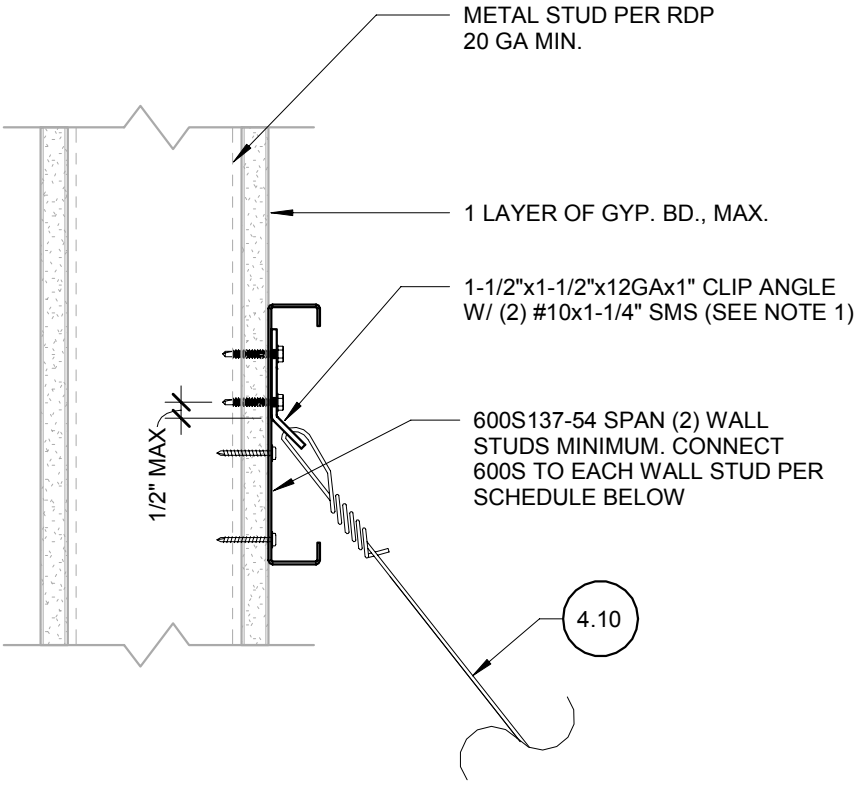

WALL STUD GAUGE	CONNECTION TO WALL STUD (WITH GYP. BD.)	CONNECTION TO WALL STUD (WITHOUT GYP. BD.)
20 GAUGE	(5) #10x1-1/4" SMS	(3) #10x1-1/4" SMS
18 GAUGE	(4) #10x1-1/4" SMS	(2) #10x1-1/4" SMS

NOTES:

1. THE CLIP ANGLE CAN BE ATTACHED DIRECTLY TO THE WALL STUD FLANGE PROVIDED BOTH OF THE FOLLOWING CONDITIONS ARE MET:
   - THE WALL STUD IS 18 GA MIN. AND CAPABLE OF SUPPORTING THE BRACE FORCE.
   - THE BRACE WIRE ALIGNS WITH THE WALL STUD WEB.

Basis Document : **DSA IR 25-2.13**

Sheet Title : **BRACING WIRE CONNECTION TO METAL STUD WALL**

rev.	09-21-15
rev.	03-10-17

Sheet No: 4.34

9/14/2015 2:16:06 PM

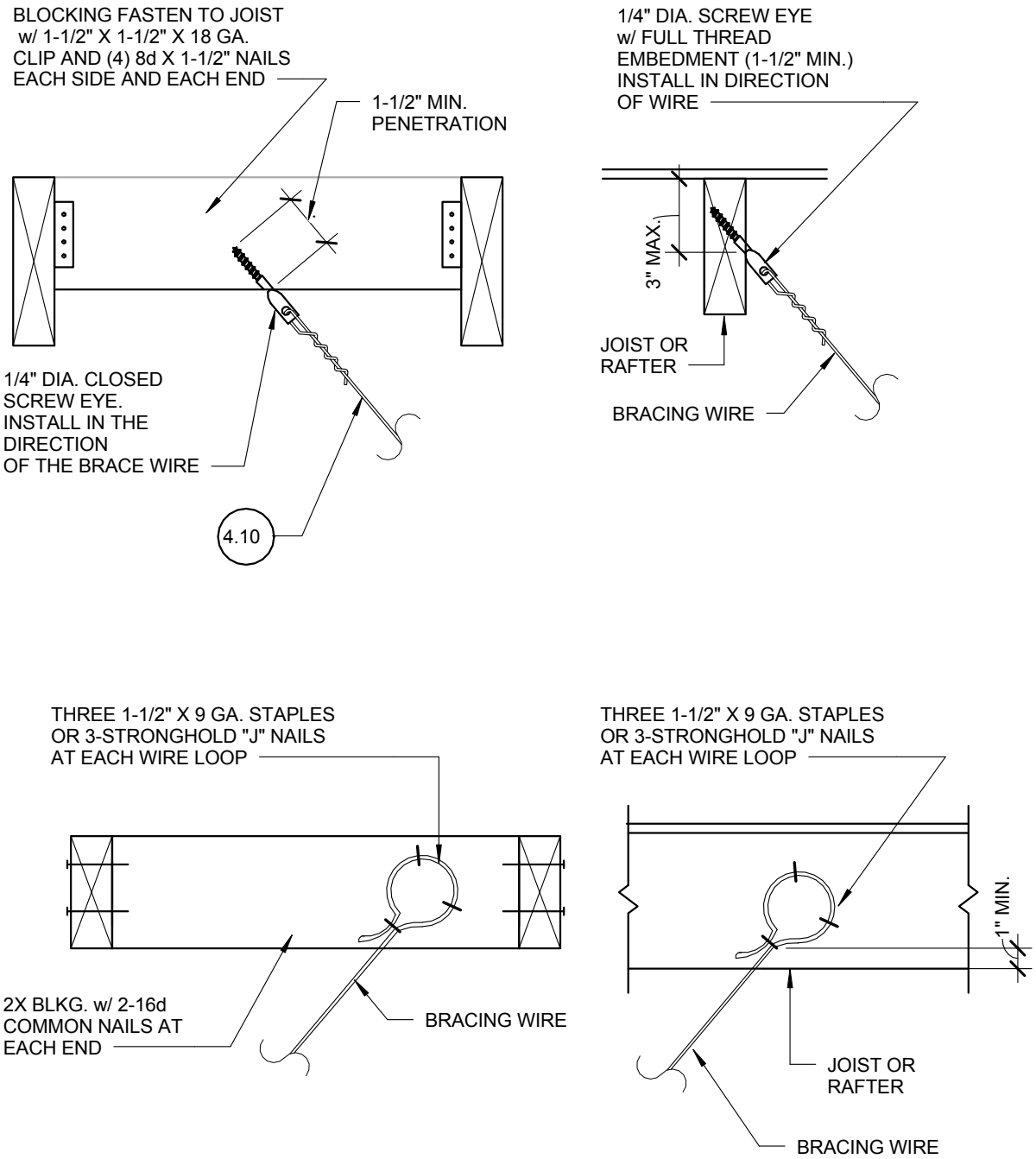

Basis Document : **DSA IR 25-2.13**			Sheet No:
Sheet Title : **BRACING WIRE CONNECTION TO SAWN TIMBER**	rev.	09-21-15	4.35

9/14/2015 2:16:07 PM

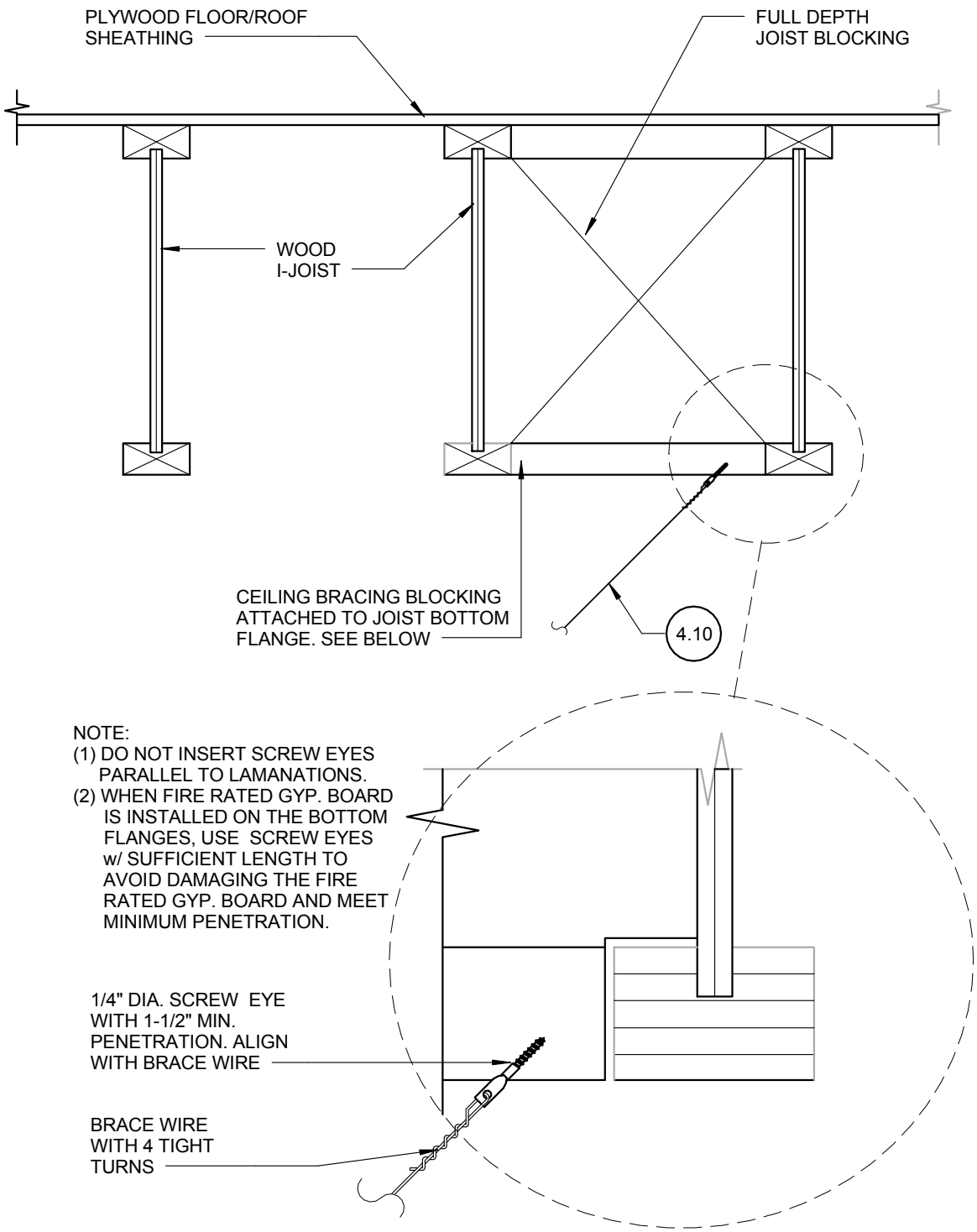

Basis Document : **DSA IR 25-2.13**			Sheet No:
Sheet Title : **BRACE WIRE CONNECTION TO WOOD I - JOIST**	rev.	09-21-15	4.36

9/14/2015 2:16:07 PM

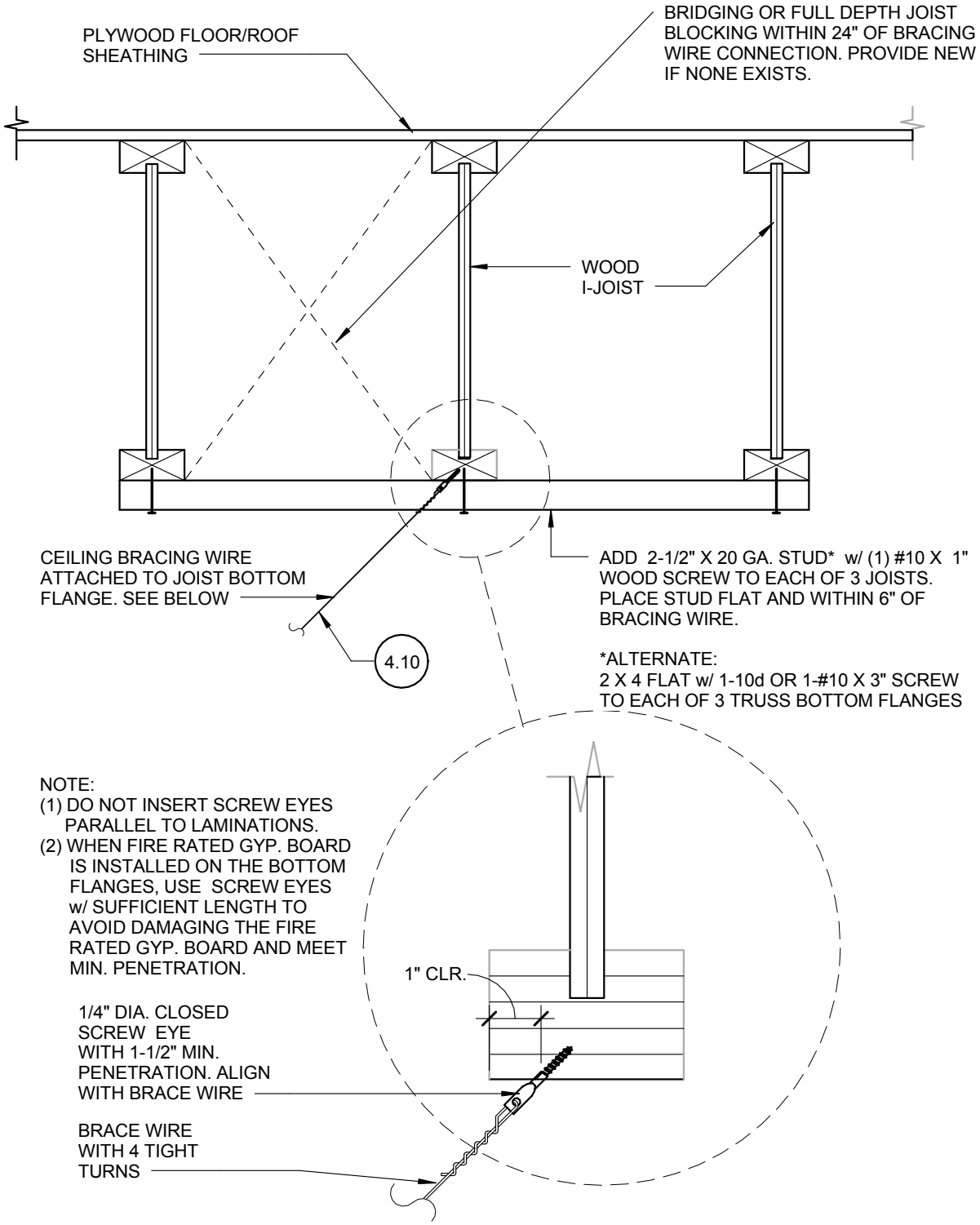

NOTE:
(1) DO NOT INSERT SCREW EYES PARALLEL TO LAMINATIONS.
(2) WHEN FIRE RATED GYP. BOARD IS INSTALLED ON THE BOTTOM FLANGES, USE SCREW EYES w/ SUFFICIENT LENGTH TO AVOID DAMAGING THE FIRE RATED GYP. BOARD AND MEET MIN. PENETRATION.

Basis Document : **DSA IR 25-2.13**			Sheet No:
Sheet Title : **BRACE WIRE CONNECTION TO WOOD I - JOIST**	rev.	09-21-15	4.37

9/14/2015 2:16:07 PM

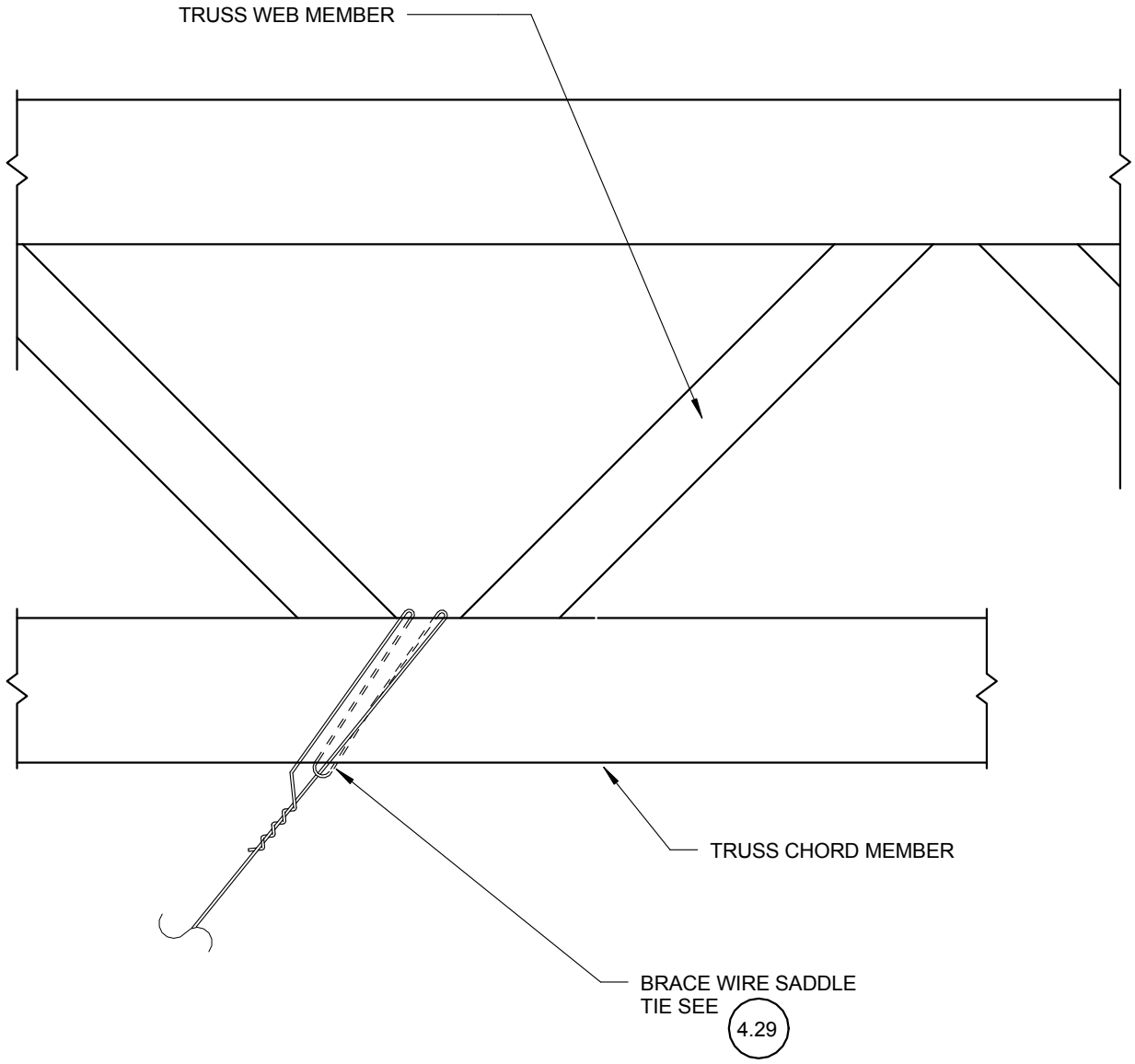

NOTES:

1. BRACE WIRE SHALL ALIGN PARALLEL WITH THE TRUSS BOTTOM CHORD

Basis Document : **DSA IR 25-2.13**			Sheet No:
Sheet Title : **BRACE WIRE CONNECTION TO WOOD CHORD TRUSS**	rev.	09-21-15	4.38

9/14/2015 2:16:07 PM

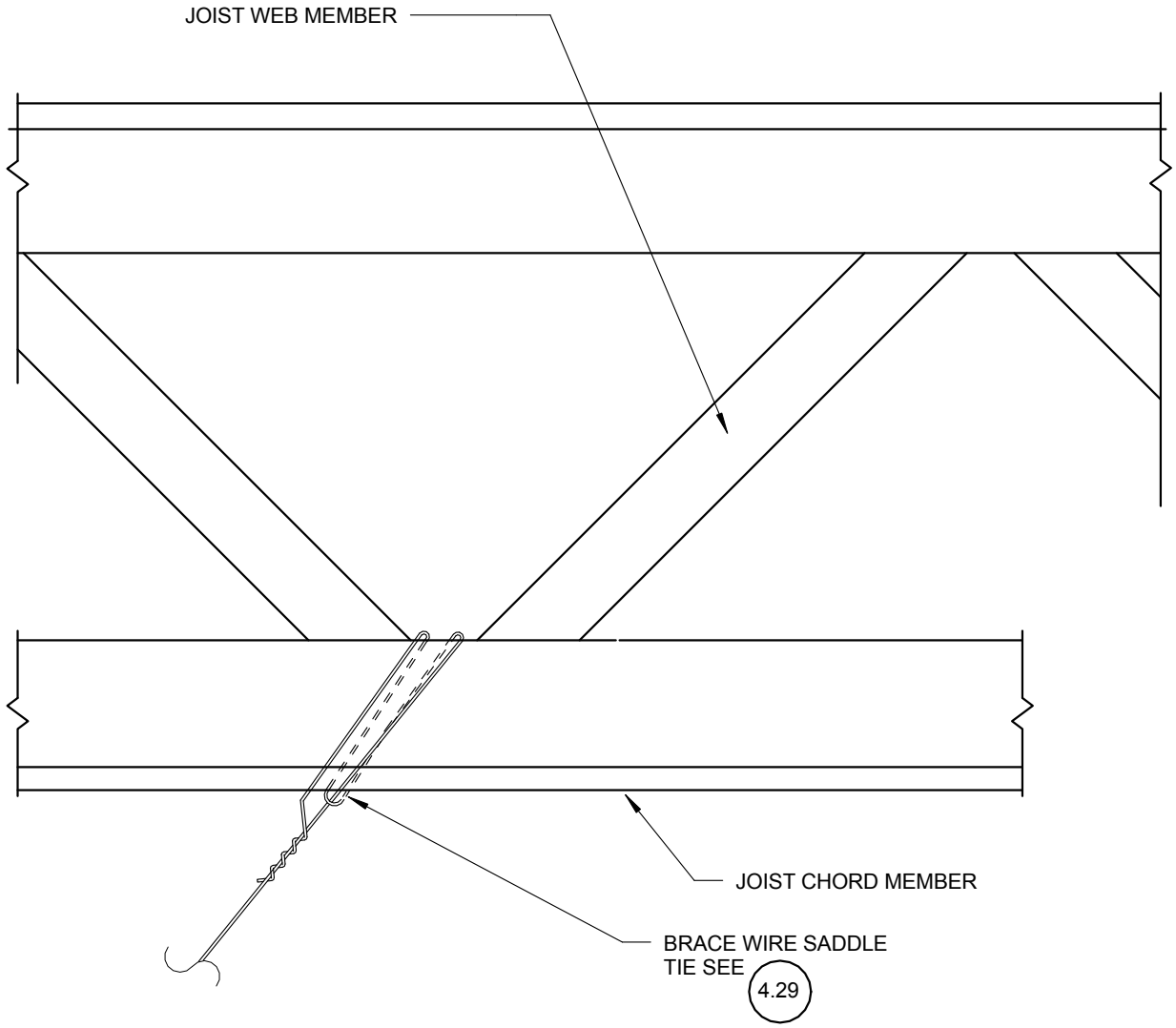

NOTES:

1. BRACE WIRE SHALL ALIGN PARALLEL WITH THE TRUSS BOTTOM CHORD

Basis Document : **DSA IR 25-2.13**			Sheet No:
Sheet Title : **BRACE WIRE CONNECTION TO OPEN-WEB STEEL JOIST**	rev.	09-21-15	4.39

9/14/2015 2:16:07 PM

STRUCTURAL CONDITION OF FLOOR / ROOF ABOVE COMPRESSION STRUT	APPLICABLE DETAIL
METAL DECK	5.20
CONCRETE OVER METAL DECK	5.21
CONCRETE SLAB, BEAM, OR JOIST	5.30
STRUCTURAL STEEL	5.40
SAWN TIMBER WITH GYPSUM BOARD	5.50
SAWN TIMBER WITHOUT GYPSUM BOARD	5.60

Basis Document : **DSA IR 25-2.13**

Sheet Title : **COMPRESSION STRUT CONNECTION TO STRUCTURE - CONNECTION MATRIX**

rev.	09-21-15

Sheet No: 5.10

9/14/2015 2:16:07 PM

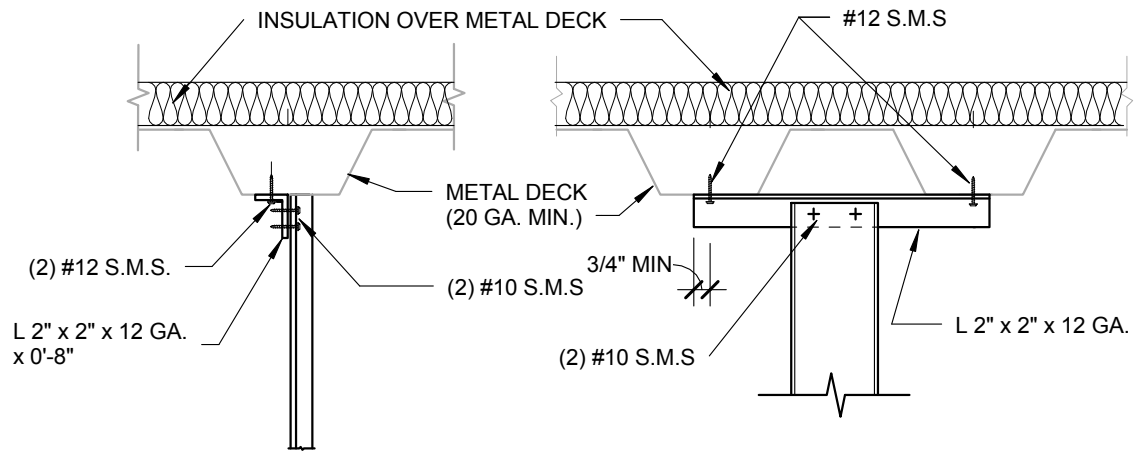

OPTION 1 **OPTION 2**

CHANNEL STRUT

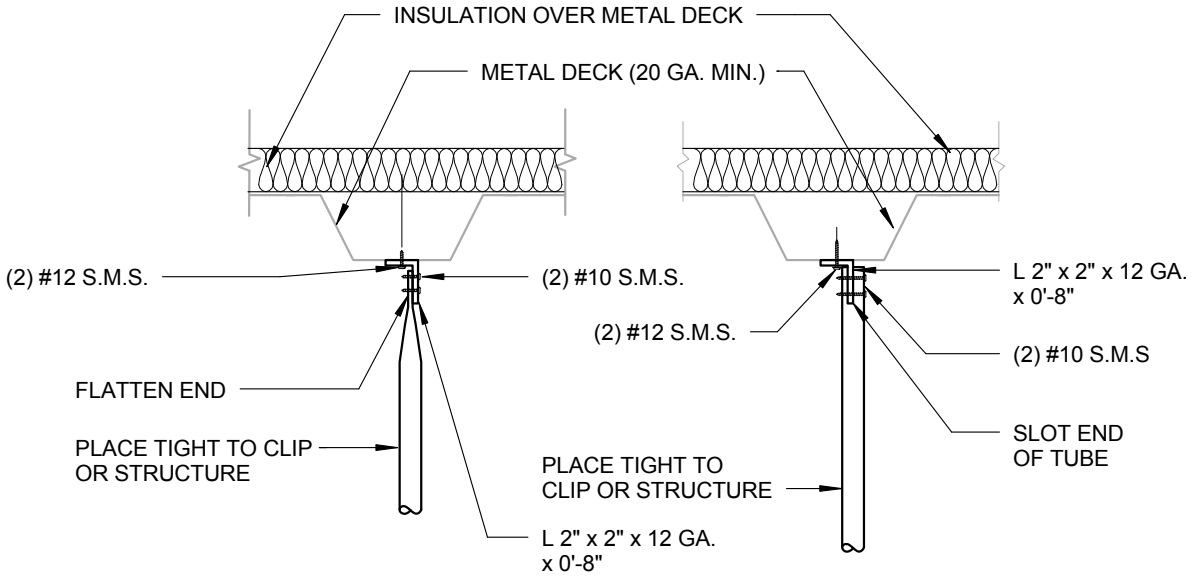

OPTION 1 **OPTION 2**

TUBE STRUT

Basis Document : **DSA IR 25-2.13**			Sheet No:
Sheet Title : **STRUT CONNECTION TO METAL DECK**	rev.	09-21-15	5.20

9/14/2015 2:16:07 PM

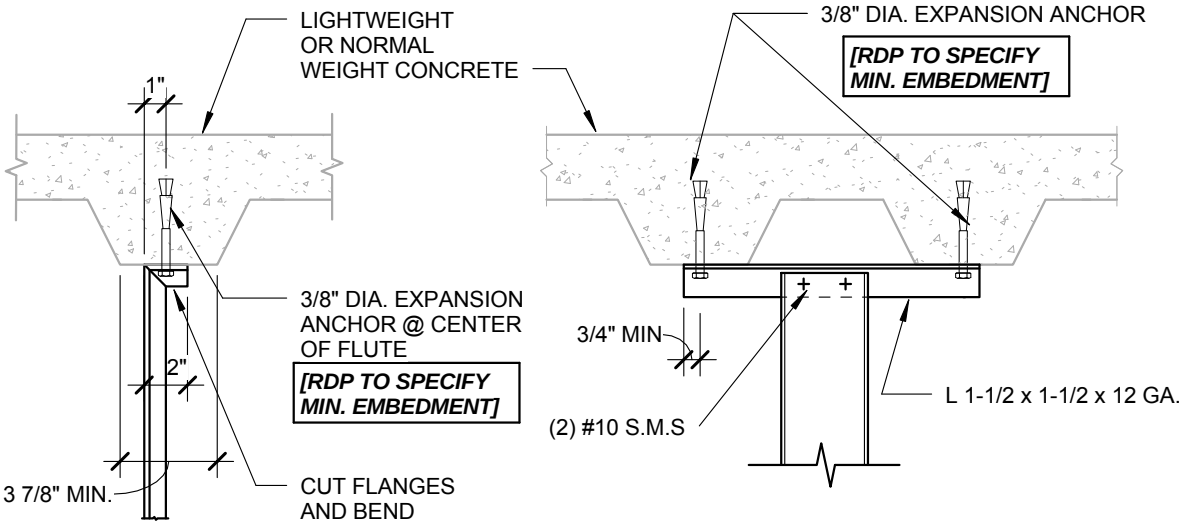

OPTION 1 **OPTION 2**

CHANNEL STRUT

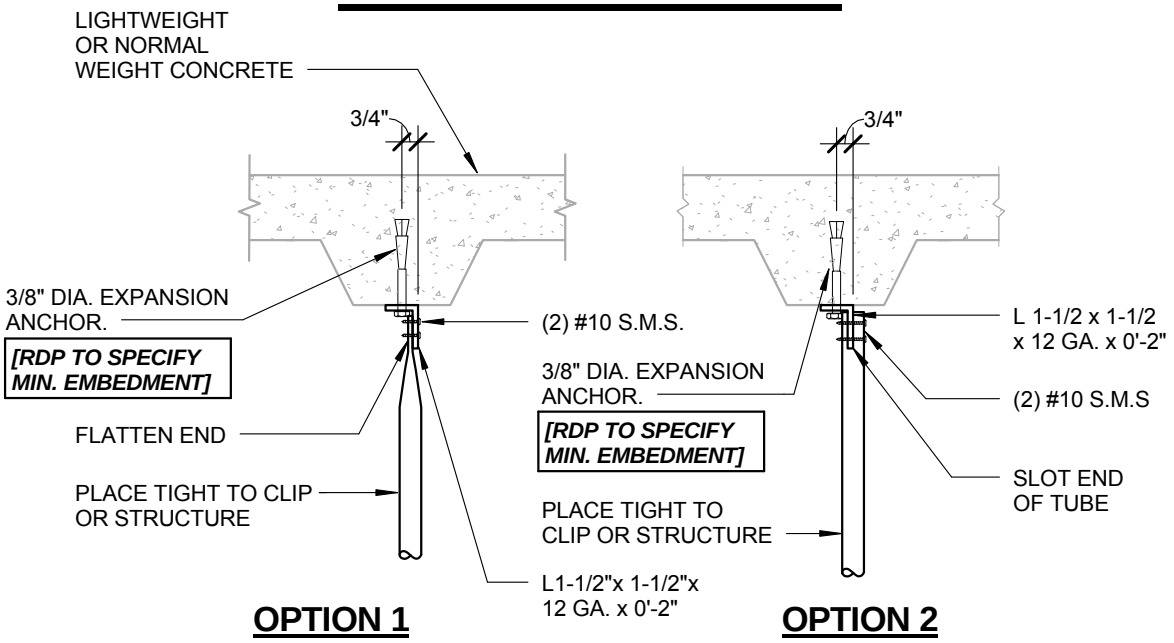

OPTION 1 **OPTION 2**

NOTES:
1. POST INSTALLED ANCHORS TO BE PLACED NO MORE THAN 1" OFFSET FROM CENTERLINE OF DECK LOW FLUTE
2. TEST POST INSTALLED ANCHORS IN ACCORDACE WITH CEILING NOTE 5.01

TUBE STRUT

Basis Document : **DSA IR 25-2.13**			Sheet No:
Sheet Title : **STRUT CONNECTION TO CONCRETE OVER METAL DECK**	rev.	09-21-15	5.21

9/14/2015 2:16:07 PM

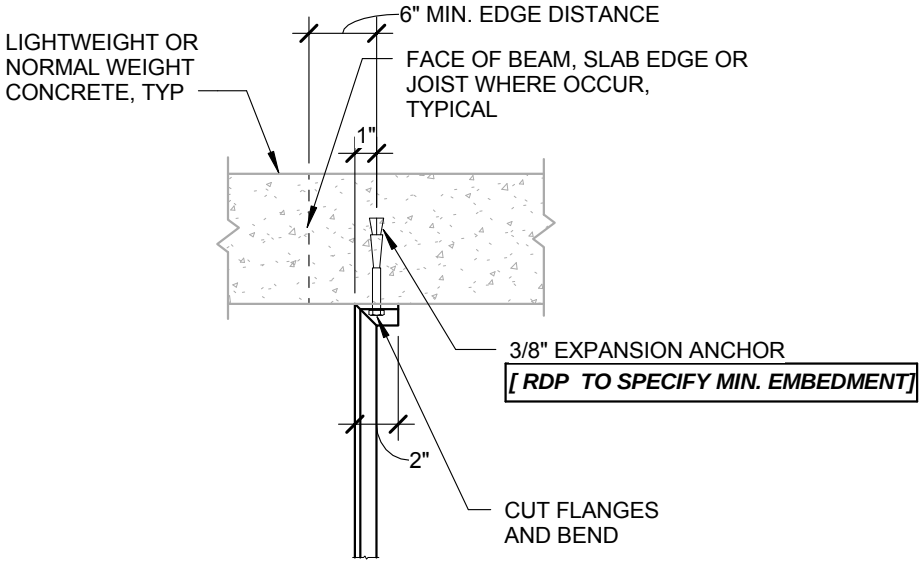

CHANNEL STRUT

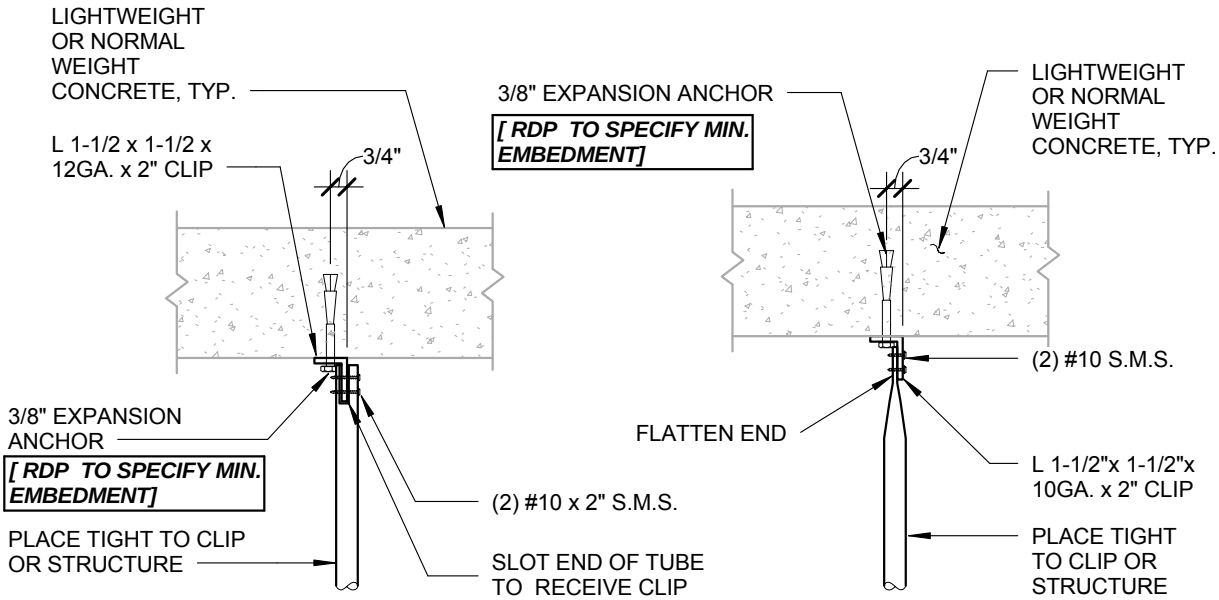

OPTION 1 **OPTION 2**

NOTES:
1. TEST POST INSTALLED ANCHORS IN ACCORDANCE WITH CEILING NOTE 5.01

TUBE STRUT

Basis Document : **DSA IR 25-2.13**			Sheet No:
Sheet Title : **STRUT CONNECTION TO CONCRETE SLAB, BEAM, JOIST SOFFIT**	rev.	09-21-15	5.30

9/14/2015 2:16:08 PM

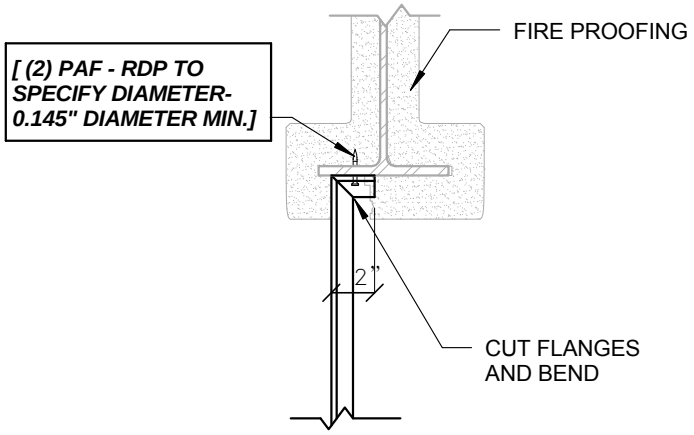

CHANNEL STRUT

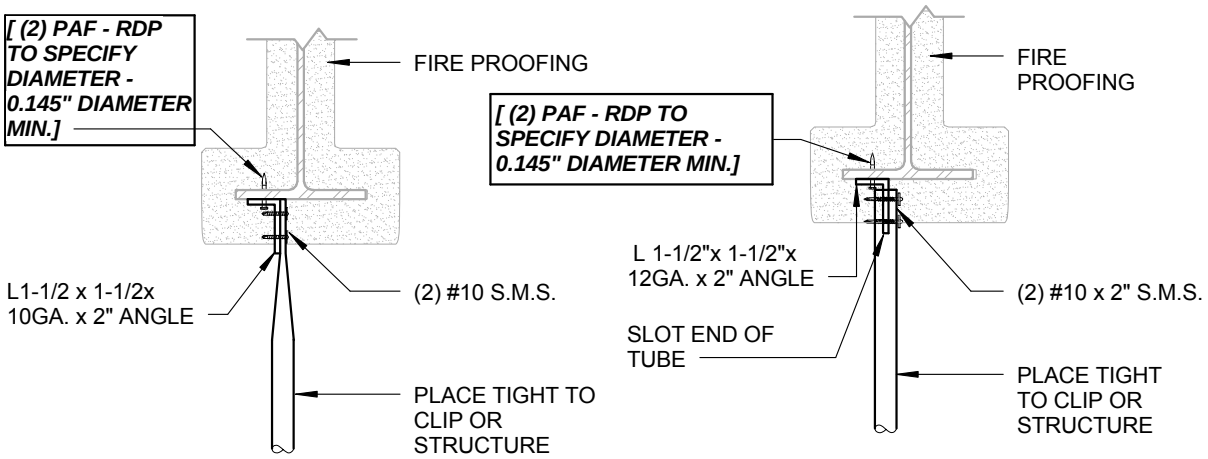

OPTION 1 **OPTION 2**

TUBE STRUT

NOTES:

1. STRUCTURAL STEEL MEMBER SHALL NOT BE LESS THAN 3/16".
2. RDP IN RESPONSIBLE CHARGE, I.O.R. AND CONTRACTOR SHALL VERIFY THAT NO PAF IS INSTALLED IN THE PROTECTED ZONE OF ANY STEEL MEMBER, SEE ANSI/AISC 341-10.
3. REFER TO 5.20 AND 5.30 FOR ADDITIONAL INFORMATION.

Basis Document : **DSA IR 25-2.13**			Sheet No:
Sheet Title : **STRUT CONNECTION TO STRUCTURAL STEEL**	rev.	09-21-15	5.40

9/14/2015 2:16:08 PM

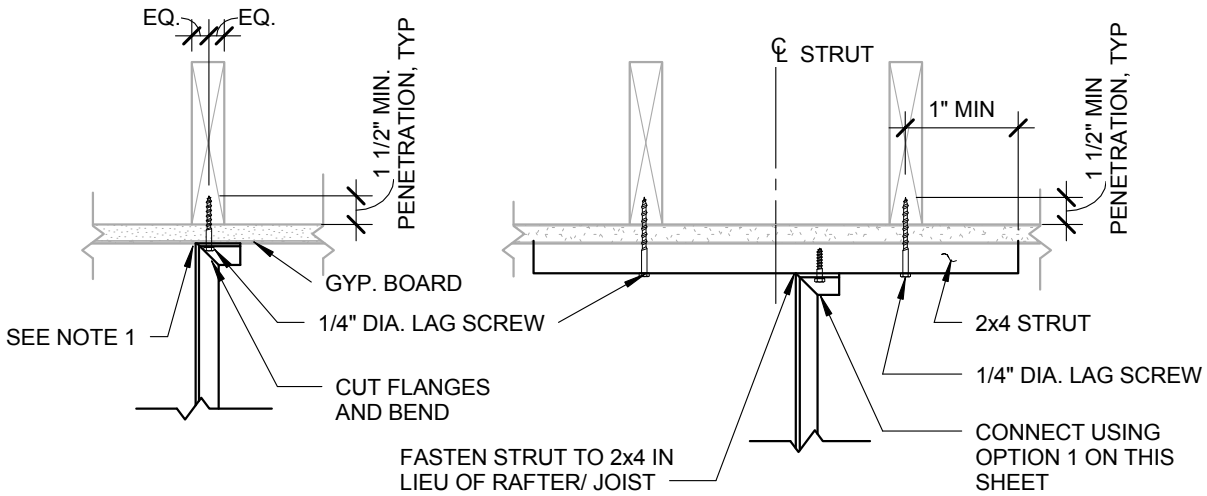

OPTION 1 **OPTION 2**

CHANNEL STRUT

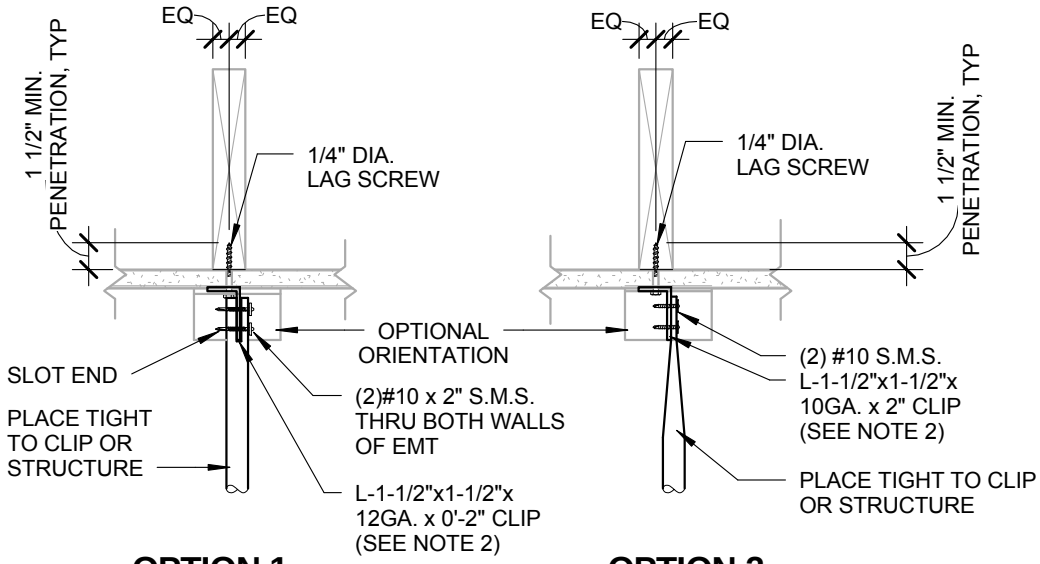

OPTION 1 **OPTION 2**

TUBE STRUT

NOTES:

1. WEB OF CHANNEL TO BEAR WITHIN WIDTH OF THE WOOD MEMBER.
2. FOR ANGLE ORIENTED IN THE STANDARD POSITION, VERTICAL LEG TO FALL WITHIN THE WIDTH OF THE WOOD MEMBER.

Basis Document : **DSA IR 25-2.13**			Sheet No:
Sheet Title : **STRUT CONNECTION TO SAWN TIMBER WITH GYPSUM BOARD**	rev.	09-21-15	5.50

9/14/2015 2:16:08 PM

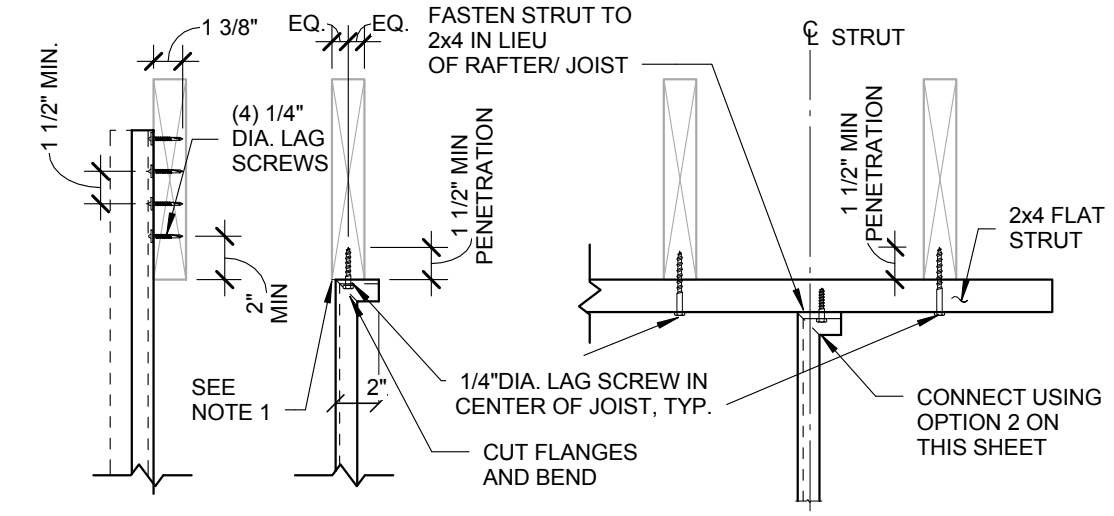

OPTION 1 **OPTION 2** **OPTION 3**

CHANNEL STRUT

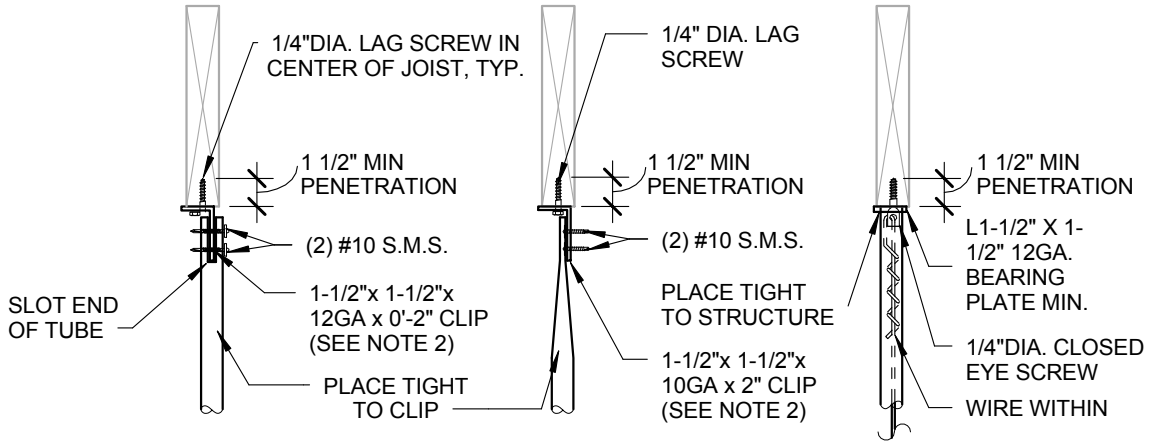

OPTION 1 **OPTION 2** **OPTION 3**

TUBE STRUT

NOTES:

1. WEB OF CHANNEL TO BEAR WITHIN WIDTH OF WOOD MEMBER.
2. VERTICAL LEG OF MEMBER TO FALL WITHIN THE WIDTH OF THE WOOD MEMBER.
3. SEE PAGE 5.50 FOR ADDITIONAL INFORMATION.

Basis Document : **DSA IR 25-2.13**			Sheet No:
Sheet Title : **STRUT CONNECTION TO SAWN TIMBER WITHOUT GYPSUM BOARD**	rev.	09-21-15	5.60

9/14/2015 2:16:08 PM

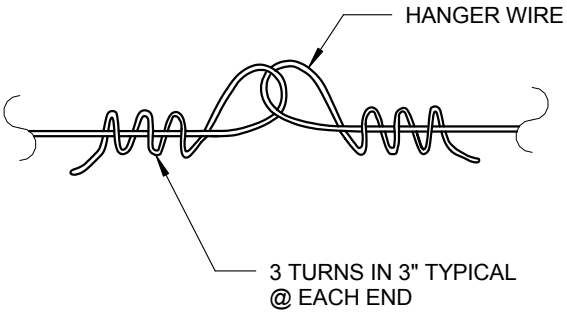

HANGER WIRE ONLY

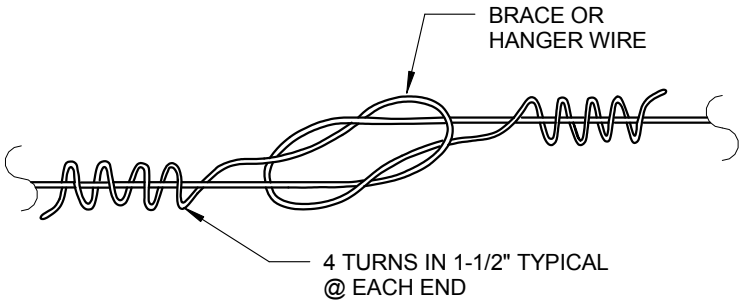

HANGER OR BRACE WIRE

NOTES:

WIRE SPLICES ARE SHOWN LOOSELY TIED FOR ILLUSTRATIVE PURPOSES ONLY AND SHALL BE DRAWN TIGHT TO COMPLETE INSTALLATION WHEN CONSTRUCTED.

Basis Document : **DSA IR 25-2.13**			Sheet No:
Sheet Title : **CEILING WIRE SPLICES**	rev.	09-21-15	6.10