SANTA MARIA FIELD OFFICE REPLACEMENT

DEPARTMENT OF MOTOR VEHICLES

DGS000000140725

2770 SANTA MARIA WAY
SANTA MARIA, CA 93455

State of California
Department of General Services

Real Estate Services Division
Project Management and Development Branch
Architecture & Engineering Section
707 Third Street, Suite 4-105
West Sacramento, CA 95605

Project Director: Clinton Sierer
Manager Phone 916-216-7806
Manager E-Mail Clinton.Sierer@dgs.ca.gov

IDENTIFICATION STAMP
DIV. OF THE STATE ARCHITECT
APP: 03-121324 INC:
REVIEWED FOR
SS ☐ FLS ☐ ACS ☑
DATE: 09/14/2022

OFFICE OF THE STATE FIRE MARSHAL
APPROVED FIRE AND PANIC ONLY
09/07/22
21-0233
Approval of this plan does not authorize or approve any omission or deviation from applicable regulations. Final approval is subject to field inspection. One set of approved plans shall be available on the project site at all times.

SHEET INDEX

SHEETS TOTAL: 192

GENERAL
G001 COVER SHEET
G021 EXITING ANALYSIS
G031 TITLE 24 COMPLIANCE FORMS
G032 TITLE 24 COMPLIANCE FORMS
G033 TITLE 24 COMPLIANCE FORMS
G034 TITLE 24 COMPLIANCE FORMS
G035 TITLE 24 COMPLIANCE FORMS
G036 TITLE 24 COMPLIANCE FORMS
G037 TITLE 24 COMPLIANCE FORMS
G042 BLDG A CALGREEN NON-RESIDENTIAL CHECKLIST

CIVIL
C001 CIVIL GENERAL NOTES
C002 CIVIL SITE STATE FIRE MARSHAL NOTES
C011 CIVIL EXISTING CONDITIONS
C021 CIVIL DEMOLITION PLAN
C101 CIVIL SITE PLAN
C201 CIVIL SITE CONTROL
C202 CIVIL SITE LAYOUT
C203 CIVIL ENLARGED SITE LAYOUTS
C204 CIVIL ENLARGED SITE LAYOUT
C205 CIVIL LINE AND CURVE TABLES
C301 CIVIL SITE GRADING PLAN
C302 CIVIL ENLARGED GRADING PLAN
C401 CIVIL UTILITY SITE PLAN
C402 SITE DRAINAGE PLAN
C403 SITE DRAINAGE DETAILS
C404 SITE DRAINAGE DETAILS
C501 CIVIL CMU BLOCK WALL WEST SECTION VIEW
C502 CIVIL TYPICAL SECTIONS
C503 CIVIL TYPICAL SECTIONS
C505 CIVIL CITY PAVEMENT DETAILS
C506 CIVIL CITY PAVEMENT DETAILS
C507 CIVIL CITY SANITY SEWER DETAILS
C508 CIVIL CITY WATER DETAILS
C509 CIVIL CITY WATER DETAILS
C510 CIVIL CITY WATER DETAILS
C511 CIVIL ACCESSIBILITY STANDARD DETAILS
C512 CIVIL TYPICAL CONCRETE DETAILS
C513 CIVIL TYPICAL DETAILS
C514 MICELLANEOUS DETAILS
C701 SUB-SLAB VENT PIPE & MEMBRANE PLAN
C702 SUB-SLAB VENT PIPE DETAILS
C703 SUB-SLAB VENT PIPE DETAILS
C704 SUB-SLAB MEMBRANE DETAILS
C705 SUB-SLAB MEMBRANE TERMINATION DETAILS
C706 SUB-SLAB MEMBRANE TERMINATION SPECIFICATIONS
C707 MEMBRANE TERMINATION SPECIFICATIONS
C708 MEMBRANE TERMINATION SPECIFICATIONS
C709 HAZARDOUS AREA CLASSIFICATION
C710 TRENCH DAM & SEAL-OFF DETAILS

LANDSCAPING
L101 IRRIGATION PLAN
L102 PLANTING PLAN
L501 IRRIGATION DETAILS
L502 IRRIGATION DETAILS
L511 PLANTING NOTES AND DETAILS

ARCHITECTURAL
A001 ARCH ABBREV, SYMBOLS, & MATERIALS
A111 ARCHITECTURAL FLOOR PLAN
A112 FLOOR FINISH PLAN
A113 SIGNAGE PLAN
A114 FURNITURE PLAN
A121 REFLECTED CEILING PLAN
A131 ROOF PLAN
A211 NORTH AND EAST ELEVATIONS
A212 SOUTH AND WEST ELEVATIONS
A221 INTERIOR ELEVATIONS
A222 INTERIOR ELEVATIONS
A223 INTERIOR ELEVATIONS
A311 BUILDING SECTIONS
A312 BUILDING SECTIONS
A313 BUILDING SECTIONS
A321 WALL SECTIONS
A322 WALL SECTIONS
A323 WALL SECTIONS
A324 WALL SECTIONS
A325 WALL SECTIONS
A411 ENLARGED FLOOR PLANS - RESTROOMS
A412 ENLARGED FLOOR PLANS - RESTROOMS
A413 ENLARGED FLOOR PLANS - VARIOUS
A414 ENLARGED FLOOR PLANS - SOUTHWEST CORNER
A415 DRIVE CANOPY PLAN
A416 TRASH ENCLOSURE PLAN
A501 ACCESSIBLE DOOR AND VERTICAL CIRCULATION DETAILS
A502 ACCESSIBLE STANDARD DETAILS
A503 ACCESSIBLE SIGN DETAILS
A504 MISCELLANEOUS TYPICAL DETAILS
A507 PANEL SYSTEM DETAILS
A508 DETAILS - SIGNAGE
A510 EXTERIOR DETAILS
A511 EXTERIOR DETAILS
A520 INTERIOR DETAILS
A521 INTERIOR DETAILS
A522 INTERIOR DETAILS
A531 ROOFING DETAILS
A532 ROOFING DETAILS
A533 GENERAL METAL ROOFING DETAILS
A561 LAY-IN CEILING DETAILS
A563 SUSPENDED GYP. BD. CEILING DETAILS
A571 DETAILS- CASEWORK
A611 WALL TYPES
A612 WALL DETAILS
A621 DOOR SCHEDULE
A631 WINDOW SCHEDULE
A641 ROOM FINISH SCHEDULE

STRUCTURAL
S001 STRUCTURAL GENERAL NOTES
S002 STRUCTURAL MATERIALS NOTES & SPECIAL INSPECT
S111 FOUNDATION PLAN
S112 LOW ROOF FRAMING PLAN
S113 HIGH ROOF FRAMING PLAN
S121 SLAB ON GRADE PLAN
S241 SHEARWALL FRAMING ELEVATIONS
S242 SHEARWALL FRAMING ELEVATIONS
S243 SHEARWALL FRAMING ELEVATIONS
S244 SHEARWALL FRAMING ELEVATIONS
S251 STEEL MOMENT FRAME ELEVATIONS
S301 STRUCTURAL BUILDING SECTIONS
S302 STRUCTURAL BUILDING SECTIONS
S303 STRUCTURAL SECTIONS
S401 FRONT ENTRY PARTIAL PLAN AND SECTIONS
S402 RESTROOM PARTITIONS
S403 TRASH ENCLOSURE, AC ROOF FRAMING
S501 FOUNDATION PLAN
S511 FRAMING DETAILS
S512 FRAMING DETAILS
S513 FRAMING DETAILS
S514 ROOF FRAMING DETAILS
S531 CONCRETE TYPICAL DETAILS
S532 CONCRETE TYPICAL DETAILS
S541 CMU TYPICAL DETAILS
S542 CMU TYPICAL DETAILS
S551 COLUMN SCHEDULE AND TYPICAL STEEL DETAILS
S552 TYPICAL STEEL DETAILS
S553 TYPICAL METAL DECK DETAILS
S554 STEEL SPECIAL MOMENT RESISTING FRAME DETAILS
S581 TYPICAL INTERIOR METAL STUD DETAILS
S582 TYPICAL INTERIOR METAL STUD DETAILS
S583 SPECIFIC METAL STUD DETAILS

MECHANICAL
M001 MECHANICAL ABBREVIATIONS, SYMBOLS & NOTES
M021 MECHANICAL SCHEDULES
M121 MECHANICAL FLOOR PLAN
M141 MECHANICAL ROOR PLAN
M321 MECHANICAL SECTIONS
M322 MECHANICAL SECTIONS
M521 MECHANICAL DETAILS
M621 MECHANICAL CONTROLS S.0.0
M622 MECHANICAL CONTROLS
M623 MECHANICAL CONTROLS

SHEET INDEX LEGEND
G001

- SEQUENCE DESIGNATOR
- SUBSET DESIGNATOR
  EXAMPLE: 0 - SITE, 1 - DEMOLITION, 2 - FLOOR, # - ETC
- SHEET TYPE DESIGNATOR
  EXAMPLE: 0 - GENERAL, 1 - PLANS, 2 - ELEVATIONS, # - ETC
- DISCIPLINE DESIGNATOR
  EXAMPLE: G - GENERAL, C - CIVIL, A - ARCHITECTURE, S - STRUCTURAL, M - MECHANICAL, P - PLUMBING, E - ELECTRICAL, X - ETC

PLUMBING
P001 PLUMBING ABBREVIATIONS SYMBOLS & NOTES
P121 PLUMBING FLOOR PLAN
P141 PLUMBING ROOF PLAN
P421 PLUMBING SECTIONS
P521 PLUMBING DETAILS

ELECTRICAL
E001 ELECTRICAL LEGEND
E002 ELECTRICAL ABBREVIATIONS & GENERAL NOTES
E003 EGRESS PHOTO. PLAN - INTERIOR, NORMAL POWER
E004 EGRESS PHOTO. PLAN - INTERIOR, EMERGENCY POWER
E005 EGRESS PHOTO. PLAN -EXTERIOR, NORMAL POWER
E006 EGRESS PHOTO. PLAN - EXTERIOR, EMERGENCY POWER
E101 ELECTRICAL SITE PLAN
E105 ELECTRICAL PHOTOVOLTAIC SITE PLAN
E106 PHOTOVOLTAIC STRING LAYOUT PLAN
E107 PHOTOVOLTAIC CONDUIT ROUTING PLAN
E121 POWER PLAN
E122 ROOF POWER PLAN
E131 LIGHTING PLAN
E141 TELECOMM PLAN
E142 TELECOMM GROUNDING PLAN
E151 SECURITY PLAN
E161 AUDIO/VISUAL PLAN
E401 ELECTRICAL SITE LARGE SCALE VIEWS
E421 ENLARGED PLANS
E501 DETAILS - SITE
E511 DETAILS - GENERAL
E512 DETAILS - GENERAL
E521 DETAILS - POWER
E531 DETAILS - LIGHTING
E541 DETAILS - TELECOMM
E542 DETAILS - TELECOMM
E543 DETAILS - TELECOMM
E551 DETAILS - SECURITY AND ACCESS CONTROL
E561 DETAILS - SLOPED ROOF PV SYSTEM
E562 DETAILS - SLOPED ROOF PV SYSTEM
E601 SINGLE LINE DIAGRAM - MAIN
E602 SINGLE LINE DIAGRAM - PHOTOVOLTAICS
E621 PANEL SCHEDULES
E622 PULL BOX & CABLE SCHEDULES
E631 LIGHTING FIXTURE & CONTROL DEVICE SCHEDULES
E632 LIGHTING DIAGRAMS AND SCHEMATICS
E641 CCTV & TELECOM. EQUIP. SCHEDULES
E642 LOW VOLTAGE SCHEMATICS

FIRE ALARM
FA001 FIRE ALARM LEGEND AND SEQUENCE OF OPERATIONS
FA011 FIRE ALARM ABBREVIATIONS AND NOTES
FA121 FIRE ALARM PLAN
FA521 FIRE ALARM DETAILS

PROJECT TEAM

PROJECT MANAGER:	CLINTON SIERER
CIVIL:	SCOTT MCDONELL
LANDSCAPING:	JEFF TSURUOKA
ARCHITECTURE:	JEREMY KHOO
STRUCTURAL:	MARSHALL ROBERTS
MECHANICAL:	SHERIF HANNA
ELECTRICAL:	JOSEPH ABDELSAYED
DMV:	JOSEPH MAYO

APPLICABLE CODES

PARTIAL LIST OF APPLICABLE CODES

2019 CALIFORNIA ADMINISTRATIVE CODE (CAC), PART 1, TITLE 24 CCR
2019 CALIFORNIA BUILDING CODE (CBC), PART 2, TITLE 24 CCR

2019 CALIFORNIA ELECTRICAL CODE (CEC), PART 3, TITLE 24 CCR

2019 CALIFORNIA MECHANICAL CODE (CMC), PART 4, TITLE 24 CCR

2019 CALIFORNIA PLUMBING CODE (CPC), PART 5, TITLE 24 CCR

2019 CALIFORNIA ENERGY CODE (CEC), PART 6, TITLE 24 CCR
2019 CALIFORNIA FIRE CODE (CFC), PART 9, TITLE 24 CCR

2019 CALIFORNIA EXISTING BUILDING CODE (CEBC), PART 10, TITLE 24 CCR

2019 CALIFORNIA GREEN BUILDING STANDARDS CODE (CALGREEN), PART 11, TITLE 24 CCR
2019 CALIFORNIA REFERENCED STANDARDS CODE, PART 12, TITLE 24 CCR
TITLE 19 CCR, PUBLIC SAFETY, STATE FIRE MARSHAL REGULATIONS
2016 ASME A17.1/CSA B44-16 SAFETY CODE FOR ELEVATORS AND ESCALATORS

PARTIAL LIST OF APPLICABLE STANDARDS

NFPA 13	STANDARD FOR THE INSTALLATION OF SPRINKLER SYSTEMS (CA AMENDED) -- 2016 EDITION
NFPA 14	STANDARD FOR THE INSTALLATION OF STANDPIPE AND HOSE SYSTEMS (CA AMENDED) --2016 EDITION
NFPA 17	STANDARD FOR DRY CHEMICAL EXTINGUISHING SYSTEMS -- 2017 EDITION
NFPA 17A	STANDARD FOR WET CHEMICAL EXTINGUISHING SYSTEMS -- 2017 EDITION
NFPA 20	STANDARD FOR THE INSTALLATION OF STATIONARY PUMPS FOR FIRE PROTECTION -- 2016 EDITION
NFPA 22	STANDARD FOR WATER TANKS FOR PRIVATE FIRE PROTECTION -- 2013 EDITION
NFPA 24	STANDARD FOR THE INSTALLATION OF PRIVATE FIRE SERVICE MAINS AND THEIR APPURTENANCES (CA AMENDED) -- 2016 EDITION
NFPA 72	NATIONAL FIRE ALARM AND SIGNALING CODE (CA AMENDED) -- 2016 EDITION
NFPA 80	STANDARD FOR FIRE DOORS AND OTHER OPENING PROTECTIVES - 2016 EDITION
NFPA 2001	STANDARD ON CLEAN AGENT FIRE EXTINGUISHING SYSTEMS (CA AMENDED) - 2015 EDITION
UL 300	STANDARD FOR FIRE TESTING OF FIRE EXTINGUISHING SYSTEMS FOR PROTECTION OF COMMERCIAL COOKING EQUIPMENT -- 2005 (R2010)
UL 464	AUDIBLE SIGNALING DEVICES FOR FIRE ALARM AND SIGNALING SYSTEMS, INCLUDING ACCESSORIES -- 2003 EDITION
UL 521	STANDARD FOR HEAT DETECTORS FOR FIRE PROTECTIVE SIGNALING SYSTEMS -- 1999 EDITION
UL 1971	STANDARD FOR SIGNALING DEVICES FOR THE HEARING IMPAIRED -- 2002 (R2012)
ICC 300	STANDARD FOR BLEACHERS, FOLDING AND TELESCOPIC SEATING, AND GRANDSTANDS -- 2017 EDITION

FOR A COMPLETE LIST OF APPLICABLE NFPA STANDARDS REFER TO 2019 CBC (SFM) CHAPTER 35 AND CALIFORNIA FIRE CODE (CFC) CHAPTER 80.

SEE CALIFORNIA BUILDING CODE, CHAPTER 35, FOR STATE OF CALIFORNIA AMENDMENTS TO THE NFPA STANDARDS

STATEMENT OF GENERAL CONFORMANCE

FOR ARCHITECTS/ENGINEERS WHO UTILIZE PLANS.
INCLUDING BUT NOT LIMITED TO SHOP DRAWINGS, PREPARED BY OTHER LICENSED DESIGN PROFESSIONALS AND/OR CONSULTANTS
(APPLICATION NO. 03-121324 FILE NO. RESD-00)

☒ THE SHEETS LISTED IN THE SHEET INDEX

HAVE BEEN PREPARED BY OTHER DESIGN PROFESSIONALS OR CONSULTANTS WHO ARE LICENSED AND/OR AUTHORIZED TO PREPARE SUCH DRAWINGS IN THIS STATE. IT HAS BEEN EXAMINED BY ME FOR:
1) DESIGN INTENT AND APPEARS TO MEET THE APPROPRIATE REQUIREMENTS OF TITLE 24, CALIFORNIA CODE OF REGULATIONS AND THE PROJECT SPECIFICATIONS PREPARED BY ME, AND
2) COORDINATION WITH MY PLANS AND SPECIFICATIONS AND IS ACCEPTABLE FOR INCORPORATION INTO THE CONSTRUCTION OF THIS PROJECT.

THE STATEMENT OF GENERAL CONFORMANCE "SHALL NOT BE CONSTRUED AS RELIEVING ME OF MY RIGHTS, DUTIES, AND RESPONSIBILITIES UNDER SECTIONS 17302 AND 81138 OF THE EDUCATION CODE AND SECTIONS 4-336, 4-341 AND 4-344" OF TITLE 24, PART 1. (TITLE 24, PART 1, SECTION 4-317)B

I FIND THAT: ☒ ALL DRAWINGS OR SHEETS LISTED ON THE COVER OR INDEX SHEET

☒ IS/ARE IN GENERAL CONFORMANCE WITH THE PROJECT DESIGN INTENT, AND
☒ HAS/HAVE BEEN COORDINATED WITH THE PROJECT PLANS AND SPECIFICATIONS

SIGNATURE — DATE: 5/16/22
ARCHITECT OR ENGINEER DESIGNATED TO BE IN GENERAL RESPONSIBLE CHARGE
PRINT NAME: JEREMY KENG-YUN KHOO
LICENSE NUMBER: C 35551 — EXPIRATION DATE: 5/31/23

☒ IS/ARE IN GENERAL CONFORMANCE WITH THE PROJECT DESIGN INTENT, AND
☒ HAS/HAVE BEEN COORDINATED WITH THE PROJECT PLANS AND SPECIFICATIONS

SIGNATURE — DATE
ARCHITECT OR ENGINEER DESIGNATED TO BE IN GENERAL RESPONSIBLE CHARGE
PRINT NAME
LICENSE NUMBER — EXPIRATION DATE

ARCHITECT'S STATEMENT

THE PROVIDED, BUT NOT LIMITED TO, CIVIL, PLUMBING, MECHANICAL, FIRE PROTECTION, ELECTRICAL, SECURITY, ELEVATOR MODULAR DRAWINGS, AND SPECIFICATIONS, AND CALCULATIONS HAVE BEEN PREPARED BY OTHER DESIGN PROFESSIONALS OR CONSULTANTS WHO ARE LICENSED AND/OR AUTHORIZED TO PREPARE SUCH DRAWINGS IN THIS STATE. THESE DOCUMENTS HAVE BEEN EXAMINED BY ME FOR THE DESIGN INTENT AND HAVE BEEN FOUND TO MEET THE APPROPRIATE REQUIREMENTS OF TITLE 24, CALIFORNIA CODE OF REGULATIONS AND THE PROJECT SPECIFICATIONS PREPARED BY ME. THE SECTIONS LISTED ABOVE ARE ACCEPTABLE FOR THE INCORPORATION IN TO THIS PROJECT FOR WHICH I AM THE INDIVIDUAL DESIGNATED TO BE IN GENERAL RESPONSIBLE CHARGE (OR FOR WHICH I HAVE BEEN DELEGATED RESPONSIBILITY FOR THE PORTION OF WORK).

SIGNATURE OF ARCHITECT	5/17/22 DATE
C 35551 LICENSE NUMBER	5/31/23 EXPIRATION DATE

PROJECT SCOPE

NEW 13,700 S.F. FIELD OFFICE REPLACEMENT BUILDING, WITH NEW UTILITY CONNECTIONS, DRIVE THROUGH CANOPY, TRASH ENCLOSURE, PARKING LOT, AND FENCE.

THE FOLLOWING ITEMS HAVE BEEN INDENTIFIED AS NON-COMPLIANT WITH THE 2019 CBC OR 2010 ADA STANDARDS AND CORRECTION OF THE ITEMS IS INCLUDED AS PART OF THE PROJECT SCOPE:

DEFERRED SUBMITTALS/APPROVALS

GENERAL
1. PROVIDE NEW CONSTRUCTION, INCLUDING DESIGN, LAYOUT, AND DISTRIBUTION. SYSTEM SHALL BE COMPLETE, APPROVED, AND OPERABLE. SEE SHEETS A111 THROUGH A131 FOR NEW CONSTRUCTION LAYOUT.
2. SITE CONDITIONS: VERIFY DIMENSIONS AND PROPOSED CONDITIONS.
3. FIRE RATED BARRIER PENETRATION: IF WORK REQUIRES THE PENETRATION OF A FIRE-RATED BARRIER, PROVIDE WORK IN SUCH A WAY AS TO MAINTAIN THE FIRE RATING.
4. PRODUCTS: SPRINKLER SYSTEMS, PARTS, COMPONENTS AND FINISHES SHALL MATCH EXISTING. PIPE SHALL BE SCHEDULE 40 BLACK STEEL. FITTINGS SHALL BE THREADED TYPE AND U.L. LISTED FOR FIRE PROTECTION SERVICE.
5. WORK SHALL NOT PROCEED UNTIL REVIEWED BY THE EOR/AOR AND SUBMITTED AND APPROVED BY AGENCY HAVING JURISDICTION.
6. DEFERRED SUBMITTAL ITEMS WILL BE SUPPLIED TO THE REGISTERED DESIGN PROFESSIONAL IN RESPONSIBLE CHARGE FOR REVIEW PRIOR TO SUBMITTING THE ITEMS TO THE OFFICE OF THE STATE FIRE MARSHAL (OSFM). THE REGISTERED DESIGN PROFESSIONAL WILL PROVIDE NOTATION INDICATING THAT THE DEFERRED SUBMITTAL DOCUMENTS HAVE BEEN REVIEWED AND FOUND TO BE IN GENERAL CONFORMANCE TO THE DESIGN OF THE BUILDING. THE DEFERRED SUBMITTAL ITEMS SHALL NOT BE INSTALLED UNTIL THE DEFERRED SUBMITTAL DOCUMENTS HAVE BEEN APPROVED BY OSFM.

FIRE ALARM SYSTEM (APP 22-S-2825-FA-DR)
7. THE FIRE ALARM SYSTEM SHALL CONFORM TO THE CALIFORNIA ELECTRICAL CODE (CEC) ARTICLE 760 AND THE CALIFORNIA FIRE CODE (CFC) SECTION 907. INSTALLATION OF THE FIRE ALARM SYSTEM SHALL NOT START UNTIL DETAILED PLANS AND SPECIFICATIONS, INCLUDING CALIFORNIA STATE FIRE MARSHAL LISTING NUMBERS FOR EACH COMPONENT OF THE SYSTEM, HAVE BEEN APPROVED BY THE CALIFORNIA STATE FIRE MARSHAL.
8. BEFORE REQUESTING FINAL APPROVAL OF THE INSTALLATION, THE CERTIFIED CONTRACTOR SHALL FURNISH A WRITTEN STATEMENT TO THE STATE FIRE MARSHAL TO THE EFFECT THAT THE SYSTEM HAS BEEN INSTALLED AND TESTED IN ACCORDANCE WITH (2016) NFPA 72 SECTIONS 7.5.6.2, 10.18.1, AND 14.1.1
9. UPON COMPLETION OF MODIFICATIONS TO THE EXISTING FIRE ALARM SYSTEM, A SATISFACTORY TEST OF THE SYSTEM SHALL BE MADE IN THE PRESENCE OF THE STATE FIRE MARSHAL.

FIRE SPRINKLER SYSTEM (APP 22-S-2826-FS-DR)
10. THE AUTOMATIC FIRE SPRINKLER SYSTEM SHALL CONFORM TO THE REQUIREMENTS OF THE 2016 EDITION OF THE NATIONAL FIRE ROTECTION ASSOCIATION STANDARD #13.
11. INSTALLATION OF THE FIRE SPRINKLER SYSTEM SHALL NOT BE STARTED UNTIL PLAN SAND SPECIFICATIONS (UNCLUDING WATER SUPPLY NFORMATION AND TYPE OF EXISTING SYSTEM, IF ANY) HAVE BEEN APPROVED BY THE CALIFORNIA STATE FIRE MARSHAL AND THE DEPARTMENT OF GENERAL SERVICES.
12. AT VARIOUS STAGES AND UPON COMPLETION, THE SYSTEM SHALL BE TESTED IN THE PRESENCE OF THE ENFORCING AGENCY.

PROJECT LOCATION

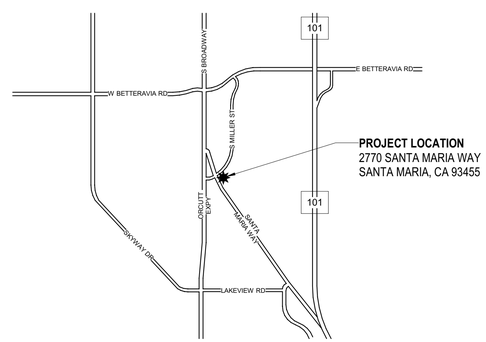

GENERAL SERVICES
Department of General Services
Architecture & Engineering Sections
State of California
Real Estate Services Division
Project Management & Development Branch
707 Third Street, Suite 4-105
West Sacramento, California 95605

LICENSED ARCHITECT
JEREMY K. KHOO
C-35551
REN. 05/31/23
STATE OF CALIFORNIA

DMV
State of California
Department of Motor Vehicles

Issue

No.	Date	Description
1	9/2/22	

Project
SANTA MARIA FIELD OFFICE REPLACEMENT
2770 SANTA MARIA WAY
SANTA MARIA, CA 93455
SANTA MARIA COUNTY

DEPT OF MOTOR VEHICLES

Supervisor	Designed	Drawn
ED	GN	JK

DSA App No. 03-121324
SFM Permit No. 21-S-0233-CP-ER

Sheet Title
COVER SHEET

Project Number
DGS000000140725

Sheet Scale
Sheet Number
G001

Copyright © 2020, California Department of General Services - Real Estate Services Division

C:\Projects\000000000140725_ARC_Project Master_22_Jeremy.Khoo58F93.rvt
9/4/2022 12:17:47 AM

RELATIVE BORDER SCALE IN INCHES

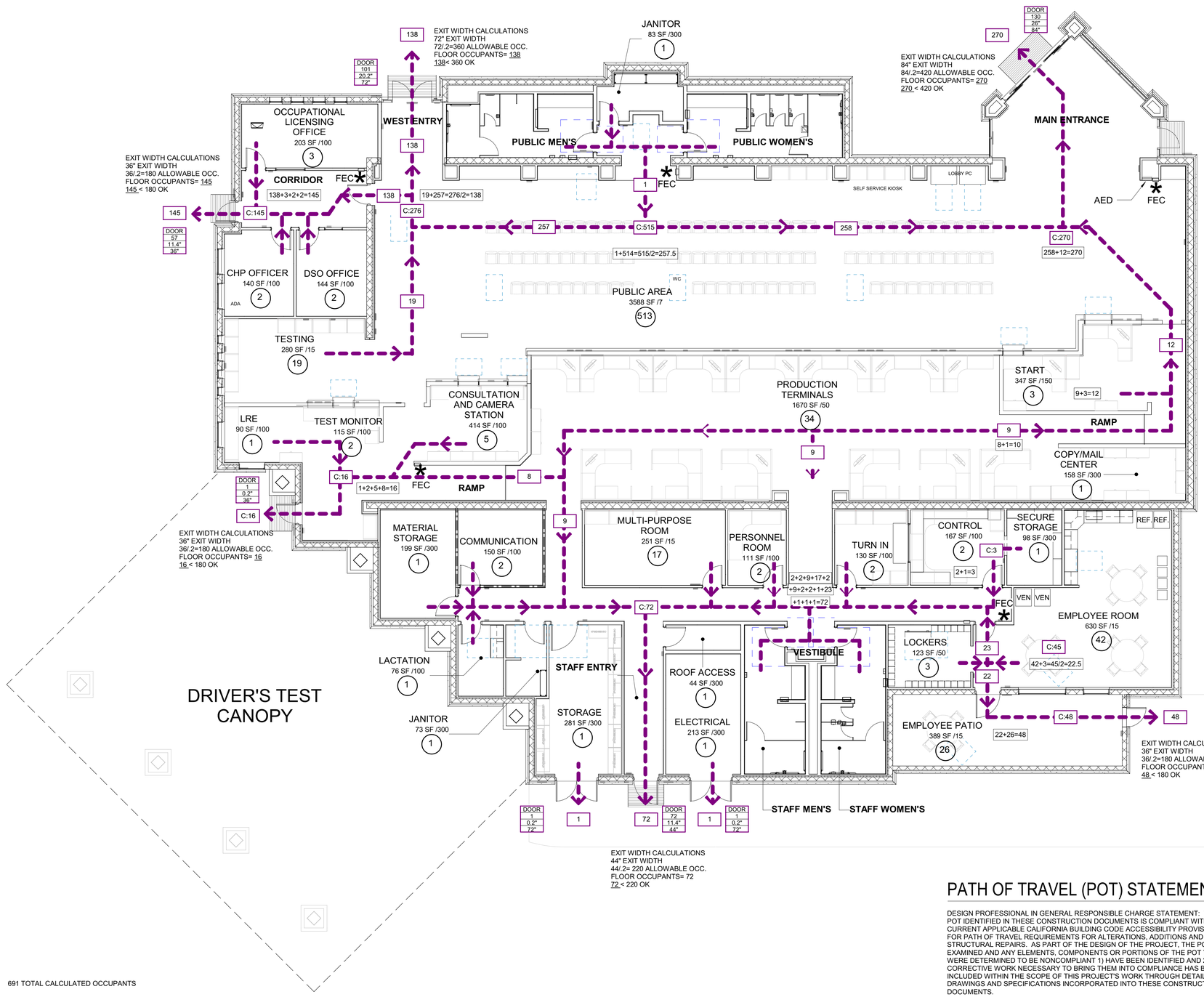

APPLICABLE BUILDING CODES

2019 BUILDING STANDARDS ADMINISTRATIVE CODE, PART 1, TITLE 24 C.C.R.
2019 CALIFORNIA BUILDING CODE (CBC), PART 2, TITLE 24 C.C.R.
2019 CALIFORNIA ELECTRICAL CODE (CEC), PART 3, TITLE 24 C.C.R.
2019 CALIFORNIA MECHANICAL CODE (CMC), PART 4, TITLE 24 C.C.R.
2019 CALIFORNIA PLUMBING CODE (CPC), PART 5, TITLE 24 C.C.R.
2019 CALIFORNIA ENERGY CODE (CEC), PART 6, TITLE 24 C.C.R.
2019 CALIFORNIA FIRE CODE (CFC), PART 9, TITLE 24 C.C.R.
2019 CALIFORNIA EXISTING BUILDING CODE, PART 10, TITLE 24 C.C.R.
2019 CALIFORNIA GREEN BUILDING STANDARDS CODE, PART 11, TITLE 24 C.C.R.
2019 CALIFORNIA REFERENCED STANDARDS PART 12, TITLE 24 C.C.R.
2019 CALIFORNIA HISTORICAL BUILDING CODE, PART 8, TITLE 24 C.C.R.
1990 TITLE 19 C.C.R., PUBLIC SAFETY, STATE FIRE MARSHAL REGULATIONS
2019 NFPA 1221 FOR ESSENTIAL SERVICES COMMUNICATION CENTERS

BUILDING INFORMATION

DTAC BUILDING

OCCUPANCY CLASSIFICATIONS:	B OCCUPANCY : CIVIC ADMINISTRATION
USES:	ASSEMBLY, STORAGE, BUISNESS
BUILDING CONSTRUCTION TYPE:	V-B
TOTAL BUILDING AREA: (GROSS):	13,700 sf
SEPERATED / NON-SEPARATED:	NON-SEPARATED (SEC 508.3)
ACCESSORY USE ANALYSIS: STORAGE:	281 S.F. < 10% (1,370 S.F.)
NUMBER OF STORIES:	1 STORY
ACTUAL BUILDING HEIGHT:	35'-0"
FIRE SPRINKLERED:	YES
FIRE ALARM:	YES
SITE AREA:	3.0 ACRES
HIGH FIRE HAZARD SEVERITY ZONE:	NO

CODE ANALYSIS - 2019 CBC

TYPE OF CONSTRUCTION B:	TYPE VB	TBL 506.2
MAXIMUM BUILDING HEIGHT B:	60 FT	TBL 504.3
MAXIMUM NUMBER OF STORIES B:	3 STORIES	TBL 504.4
ALLOWABLE AREA B:	36,000 S.F.	TBL 506.2
ACTUAL BUILDING HEIGHT	35 FT	
ACTUAL NUMBER OF STORIES	1 STORIES	
ACTUAL AREA	13,700 S.F.	
FIRE ALARM:	YES	
SITE AREA:	3.00 ACRES	
HIGH FIRE HAZARD SEVERITY ZONE:	NO	

TOTAL OCCUPANCY:

145+138+270+48+1+72+1+16 =

691 TOTAL OCCUPANTS

EXITING PLAN LEGEND

ROOM NAME
ROOM S.F. / OCCUPANCY LOAD FACTOR
OCCUPANT LOAD — ROOM TAG

EGRESS PATH OF TRAVEL

DOOR 130 26" 84" — NUMBER OF OCCUPANTS EXITING; REQUIRED WIDTH; ACTUAL WIDTH — EXITING DOOR TAG

X+X=X/X=X — CALCULATIONS TO GET CUMULATIVE LOAD AT POINT

XX — CUMULATIVE LOAD AT POINT

* FEC — FIRE EXTINGUISHER CABINET

PATH OF TRAVEL (POT) STATEMENT

DESIGN PROFESSIONAL IN GENERAL RESPONSIBLE CHARGE STATEMENT: THE POT IDENTIFIED IN THESE CONSTRUCTION DOCUMENTS IS COMPLIANT WITH THE CURRENT APPLICABLE CALIFORNIA BUILDING CODE ACCESSIBILITY PROVISIONS FOR PATH OF TRAVEL REQUIREMENTS FOR ALTERATIONS, ADDITIONS AND STRUCTURAL REPAIRS. AS PART OF THE DESIGN OF THE PROJECT, THE POT WAS EXAMINED AND ANY ELEMENTS, COMPONENTS OR PORTIONS OF THE POT THAT WERE DETERMINED TO BE NONCOMPLIANT 1) HAVE BEEN IDENTIFIED AND 2) THE CORRECTIVE WORK NECESSARY TO BRING THEM INTO COMPLIANCE HAS BEEN INCLUDED WITHIN THE SCOPE OF THIS PROJECT'S WORK THROUGH DETAILS, DRAWINGS AND SPECIFICATIONS INCORPORATED INTO THESE CONSTRUCTION DOCUMENTS.

ANY NONCOMPLIANT ELEMENTS, COMPONENTS OR PORTIONS OF THE POT THAT WILL NOT BE CORRECTED BY THIS PROJECT BASED ON VALUATION THRESHOLD LIMITATIONS OR A FINDING OF UNREASONABLE HARDSHIP ARE SO INDICATED IN THESE CONSTRUCTION DOCUMENTS.
DURING CONSTRUCTION, IF POT ITEMS WITHIN THE SCOPE OF THE PROJECT REPRESENTED AS CODE COMPLIANT ARE FOUND TO BE NONCONFORMING BEYOND REASONABLE CONSTRUCTION TOLERANCES, THEY SHALL BE BROUGHT INTO COMPLIANCE WITH THE CBC AS A PART OF THIS PROJECT BY MEANS OF A CONSTRUCTION CHANGE DOCUMENTS

1 EXITING PLAN — 1/8" = 1'-0"

IDENTIFICATION STAMP
DIV. OF THE STATE ARCHITECT
APP: 03-121324 INC:
REVIEWED FOR
SS ☐ FLS ☐ ACS ☑
DATE: 09/14/2022

OFFICE OF THE STATE FIRE MARSHAL
APPROVED FIRE AND PANIC ONLY
09/07/22
21-0233
Approval of this plan does not authorize or approve any omission or deviation from applicable regulations. Final approval is subject to field inspection. One set of approved plans shall be available on the project site at all times.

DGS GENERAL SERVICES
Department of General Services
Architecture & Engineering Sections
State of California
Real Estate Services Division
Project Management & Development Branch
707 Third Street, Suite 4-105
West Sacramento, California 95605

LICENSED ARCHITECT
JEREMY K. KHOO
C-35654
REN. 05/31/23
STATE OF CALIFORNIA

DMV
State of California
Department of Motor Vehicles

Issue

No.	Date	Description
1	7/8/22	

Project
SANTA MARIA FIELD OFFICE REPLACEMENT
2770 SANTA MARIA WAY
SANTA MARIA, CA 93455
SANTA MARIA COUNTY

DEPT OF MOTOR VEHICLES

Supervisor	Designed	Drawn
MG	GLP	TM

DSA App No. 03-121324
SFM Permit No. 21-S-0233-CP-ER

Sheet Title
EXITING ANALYSIS

Project Number
DGS000000140725

Sheet Scale
Sheet Number
G021

Copyright © 2020, California Department of General Services- Real Estate Services Division
V4

C:\Projects\000000000140725_ARC_Project Master_22_Jeremy.Khoo58F93.rvt
9/2/2022 6:21:17 AM

RELATIVE BORDER SCALE IN INCHES

1

Project Name:	Santa Maria DMV	NRCC-PRF-01-E	Page 1 of 26
Project Address:	Santa Maria	Calculation Date/Time:	11:33, Wed, May 20, 2020
Input File Name:	140725 Santa Maria -- with plan area updates 10-6-18 (GAS AND ALL ECONMIZERS) - Copy UPDATED_With Lighting.cibd19x		

A. GENERAL INFORMATION

1.	Project Location (city)	Santa Maria	**8.**	Standards Version	Compliance2019
2.	CA Zip Code		**9.**	Compliance Software (version)	EnergyPro 8.1
3.	Climate Zone	5	**10.**	Weather File	SANTA-MARIA_723940_CZ2010.epw
4.	Total Conditioned Floor Area in Scope	13,742 ft^2	**11.**	Building Orientation (deg)	(N) 332 deg
5.	Total Unconditioned Floor Area	0 ft^2	**12.**	Permitted Scope of Work	NewComplete
6.	Total # of Stories (Habitable Above Grade)	1	13	Building Type(s)	Nonresidential
7.	Total # of dwelling units	0	14	Gas Type	NaturalGas

B. PROJECT SUMMARY

Table Instructions: Table B shows which building components are included in the performance calculation. If indicated as not included, the project must show compliance prescriptively if within permit application.

Building Components Complying via Performance						Building Components Complying Prescriptively	
Envelope	☒	Performance	Covered Process: Commercial Kitchens	☐	Performance	*The following building components are ONLY eligible for prescriptive compliance and should be documented on the NRCC form listed if within the scope of the permit application (i.e. compliance will not be shown on the NRCC-PRF-E).*	
	☐	Not Included		☒	Not Included		
Mechanical	☒	Performance	Covered Process: Computer Rooms	☐	Performance	Indoor Lighting (Unconditioned)§140.6	*NRCC-LTI -E is required*
	☐	Not Included		☒	Not Included	Outdoor Lighting §140.7	*NRCC-LTO-E is required*
Domestic Hot Water	☒	Performance	Covered Process: Laboratory Exhaust	☐	Performance	Sign Lighting §140.8	*NRCC -LTS-E is required*
	☐	Not Included		☒	Not Included	Mandatory Measures	
Lighting (Indoor Conditioned)	☒	Performance				*Electrical power systems, commissioning and solar ready requirements are mandatory and should be documented on the NRCC form listed if applicable (i.e. compliance will not be shown on the NRCC-PRF-E.)*	
	☐	Not Included				Electrical Power Distribution S110.11	*NRCC-ELC-E is required*
Solar Thermal Water Heating	☐	Performance				Commissioning S120.8	*NRCC-CXR-E is required*
	☒	Not Included				Solar Ready S110.10	*NRCC-SRA-E is required*

2

Project Name:	Santa Maria DMV	NRCC-PRF-01-E	Page 2 of 26
Project Address:	Santa Maria	Calculation Date/Time:	11:33, Wed, May 20, 2020
Input File Name:	140725 Santa Maria -- with plan area updates 10-6-18 (GAS AND ALL ECONMIZERS) - Copy UPDATED_With Lighting.cibd19x		

C1. COMPLIANCE RESULTS FOR PERFORMANCE COMPONENTS (Annual TDV Energy Use, kBtu/ft ^{2}-yr)

COMPLIES

Energy Component	Standard Design (TDV)	Proposed Design (TDV)	Compliance Margin (TDV)[1]
Space Heating	26.35	19.70	6.65
Space Cooling	29.25	15.38	13.87
Indoor Fans	81.12	71.46	9.66
Heat Rejection	--	--	--
Pumps & Misc.	--	--	--
Domestic Hot Water	6.88	11.16	-4.28
Indoor Lighting	43.28	28.61	14.67
ENERGY STANDARDS COMPLIANCE TOTAL	**186.88**	**146.31**	**40.57 (21.7%)**

[1] *Notes: The number in parenthesis following the Compliance Margin in column 4. represents the Percent Better than Standard.*

C2. RESULTS FOR 'ABOVE CODE' QUALIFICATIONS[1]

☐ This project is pursuing CalGreen Tier 1 ☐ This project is pursuing CalGreen Tier 2

Miscellaneous Energy Component	Standard Design (TDV)	Proposed Design (TDV)	Compliance Margin (TDV)[1]
Receptacle	87.00	87.00	--
Process	23.90	23.90	--
Other Ltg	--	--	--
Process Motors	--	--	--
COMPLIANCE TOTAL PLUS MISCELLANEOUS COMPONENTS	**297.78**	**257.21**	**40.6 (13.6%)**

[1] *Notes: This table is used to document compliance with programs OTHER THAN Title 24 Part 6, if applicable.*

D. EXCEPTIONAL CONDITIONS

The aged solar reflectance and aged thermal emittance must be listed in the Cool Roof Rating Council database of certified products. For projects where initial reflectance is used, the initial reflectance must be listed, and the aged reflectance is calculated by the software program and used in the compliance model.

This project uses the Simplified Geometry Performance Modeling Approach which is not capable of modeling daylighting controls and assumes the prescriptive Secondary Daylit Control requirements are met. PRESCRIPTIVE COMPLIANCE documentation (form NRCC-LTI-02-E) for the requirements of section 140.6(d) Automatic Daylighting Controls in Secondary Daylit Zones is required.

3

Project Name:	Santa Maria DMV	NRCC-PRF-01-E	Page 3 of 26
Project Address:	Santa Maria	Calculation Date/Time:	11:33, Wed, May 20, 2020
Input File Name:	140725 Santa Maria -- with plan area updates 10-6-18 (GAS AND ALL ECONMIZERS) - Copy UPDATED_With Lighting.cibd19x		

E. HERS VERIFICATION

This Section Does Not Apply

F. ADDITIONAL REMARKS

This Section Does Not Apply

G. ENVELOPE GENERAL INFORMATION

1	2	3	4
Opaque Surfaces & Orientation	**Total Gross Surface Area (ft^2)**	**Total Fenestration Area (ft^2)**	**Window to Wall Ratio (%)**
North-Facing[1]	4,132 ft^2	616 ft^2	14.9%
East-Facing[2]	2,729 ft^2	296 ft^2	10.8%
South-Facing[3]	4,403 ft^2	306 ft^2	06.9%
West-Facing[4]	3,317 ft^2	661 ft^2	19.9%
Total	**14,581 ft^2**	**1,878 ft^2**	**12.9%**
Roof	13,742 ft^2	108 ft^2	00.8%

Notes:
[1] *North-Facing is oriented to within 45 degrees of true north, including 45°00'00" east of north (NE), but excluding 45°00'00" west of north (NW).*
[2] *East-Facing is oriented to within 45 degrees of true east, including 45°00'00" south of east (SE), but excluding 45°00'00" north of east (NE).*
[3] *South-Facing is oriented to within 45 degrees of true south, including 45°00'00" west of south (SW), but excluding 45°00'00" east of south (SE).*
[4] *West-Facing is oriented to within 45 degrees of true west, including 45°00'00" north of due west (NW), but excluding 45°00'00" south of west (SW).*

H. FENESTRATION ASSEMBLY SUMMARY §110.6

1.	2.	3.	4.	5.	6.	7.	8.	9.
Fenestration Assembly Name / Tag or I.D.	**Fenestration Type / Product Type / Frame Type**	**Certification Method[1]**	**Assembly Method**	**Area ft^2**	**Overall U-factor**	**Overall SHGC**	**Overall VT**	**Status[2]**
santamaria-Dbl/Mtl Clr Low-E	VerticalFenestration FixedWindow N/A	NFRC Rated	Manufactured	1745	0.36	0.38	0.50	N
Suntube	Skylight FixedWindow N/A	NFRC Rated	Manufactured	108	0.32	0.25	0.50	N

4

Project Name:	Santa Maria DMV	NRCC-PRF-01-E	Page 4 of 26
Project Address:	Santa Maria	Calculation Date/Time:	11:33, Wed, May 20, 2020
Input File Name:	140725 Santa Maria -- with plan area updates 10-6-18 (GAS AND ALL ECONMIZERS) - Copy UPDATED_With Lighting.cibd19x		

H. FENESTRATION ASSEMBLY SUMMARY §110.6

1.	2.	3.	4.	5.	6.	7.	8.	9.
Fenestration Assembly Name / Tag or I.D.	**Fenestration Type / Product Type / Frame Type**	**Certification Method[1]**	**Assembly Method**	**Area ft^2**	**Overall U-factor**	**Overall SHGC**	**Overall VT**	**Status[2]**
Door	VerticalFenestration GlazedDoor N/A	NFRC Rated	Manufactured	133	0.36	0.25	0.50	N
santamaria-Dbl/Mtl Clr Low-E_Clerestory	VerticalFenestration FixedWindow N/A			NaN	0.36	0.38	0.00	N

[1] *Newly installed fenestration shall have a certified NFRC Label Certificate or use the CEC default tables found in Table 110.6-A and Table 110.6-B. Center of Glass (COG) values are for the glass-only, determined by the manufacturer, and are shown for ease of verification. Site-built fenestration values are calculated per Nonresidential Appendix NA6 and are used in the analysis.*
[2] *Status: N - New, A – Altered, E – Existing*

I. ENVELOPE DETAILS §120.7 & §140.3

I1. OPAQUE SURFACE ASSEMBLY SUMMARY

1	2	3	4	5	6	7	8	9
Surface Name	**Surface Type**	**Description of Assembly Layers**	**Area (ft^2)**	**Framing Type**	**Cavity R-Value**	**Continuous R-Value**	**U-Factor / F-Factor / C-Factor**	**Status[1]**
Slab On Grade17	UndergroundFloor	Slab Type = UnheatedSlabOnGrade Insulation Orientation = None Insulation R-Value = R0	13742	NA	0	NA	F-Factor: 0.730	N
SM-lower-8 CMU Wall19	ExteriorWall	Concrete - Solid Grout - 125 lb/ft3 - 8 in. Expanded Polystyrene - EPS - 2 2/5 in. R10	5520	NA	0	10	U-Factor: 0.086	N
R-20 Spray w/ R-10 Rigid26	Roof	Plywood - 1/2 in. Spray applied - Polyurethane foam - 0.5 lb/ft3 - 6 in. Vapor seal - plastic film - 1/16 in. Extruded Polystyrene - XPS - 2 in. R10.00	13742	NA	0	30	U-Factor: 0.032	N
Cavity Insul Metal Stud w77	ExteriorWall	Metal Insulated Panels - 2 in. Metal framed wall, 16in. OC, 5.5in., R-21 Gypsum Board - 5/8 in. Metal Siding - 1/16 in.	1674	Metal	21	NA	U-Factor: 0.057	N

IDENTIFICATION STAMP
DIV. OF THE STATE ARCHITECT
APP: 03-121324 INC: A
REVIEWED FOR
SS ☐ FLS ☐ ACS ☑
DATE: 09/14/2022

OFFICE OF THE STATE FIRE MARSHAL
APPROVED FIRE AND PANIC ONLY
09/07/22
21-0233
Approval of this plan does not authorize or approve any omission or deviation from applicable regulations. Final approval is subject to field inspection. One set of approved plans shall be available on the project site at all times.

DGS GENERAL SERVICES

Department of General Services
Architecture & Engineering Sections
State of California
Real Estate Services Division
Project Management & Development Branch
707 Third Street, Suite 4-105
West Sacramento, California 95605

LICENSED ARCHITECT
JEREMY K. KHOO
C-35651
REN. 05/31/23
STATE OF CALIFORNIA

DMV
State of California
Department of Motor Vehicles

Issue

No.	Date	Description
1	9/2/22	

Project
SANTA MARIA FIELD OFFICE REPLACEMENT
2770 SANTA MARIA WAY
SANTA MARIA, CA 93455
SANTA MARIA COUNTY

DEPT OF MOTOR VEHICLES

Supervisor	Designed	Drawn
MG	GP	JK

DSA App No. 03-121324
SFM Permit No. 21-S-0233-CP-ER

Sheet Title
TITLE 24 COMPLIANCE FORMS

Project Number
DGS000000140725

Sheet Scale

Sheet Number
G031

Copyright © 2020, California Department of General Services- Real Estate Services Division

C:\Projects\000000000140725_ARC_Project Master_22_Jeremy.Khoo58F93.rvt
7/12/2022 12:02:14 PM
RELATIVE BORDER SCALE IN INCHES

Project Name:	Santa Maria DMV	NRCC-PRF-01-E	Page 5 of 26
Project Address:	Santa Maria	Calculation Date/Time:	11:33, Wed, May 20, 2020
Input File Name:	140725 Santa Maria -- with plan area updates 10-6-18 (GAS AND ALL ECONMIZERS) - Copy UPDATED_With Lighting.cibd19x		

I. ENVELOPE DETAILS §120.7 & §140.3

I1. OPAQUE SURFACE ASSEMBLY SUMMARY

1	2	3	4	5	6	7	8	9
Surface Name	Surface Type	Description of Assembly Layers	Area (ft²)	Framing Type	Cavity R-Value	Continuous R-Value	U-Factor / F-Factor / C-Factor	Status[1]
SM-lower-10 CMU Wall -103	ExteriorWall	Expanded Polystyrene - EPS - 2 2/5 in. R10 Concrete - Solid Grout - 125 lb/ft3 - 10 in.	1103	NA	0	10	U-Factor: 0.084	N
SM-upper-10 CMU Wall -105	ExteriorWall	Expanded Polystyrene - EPS - 2 2/5 in. R10 Concrete - Solid Grout - 125 lb/ft3 - 10 in.	6284	NA	0	10	U-Factor: 0.084	N
SM-lower-8 CMU Wall191	InteriorWall	Concrete - Solid Grout - 125 lb/ft3 - 8 in. Expanded Polystyrene - EPS - 2 2/5 in. R10	400	NA	0	10	U-Factor: 0.082	N
R-15 Wall Metal Stud297	InteriorWall	Stucco - 7/8 in. Vapor permeable felt - 1/8 in. Metal framed wall, 16in. OC, 3.5in., R-15 Gypsum Board - 1/2 in.	450	Metal	15	NA	U-Factor: 0.191	N

[1] *Status: N - New, A – Altered, E – Existing*

I2. OVERHANG DETAILS

1	2	3		4
Fenestration Tag/ID	Fenestration Orientation	Overhang Dimensions		Side fin
		Horizontal Projection	Distance Above Window	Vertical Projection
Window 2x2 (left)20	North	3.3 ft.	0.0 ft.	Left: 0 ft., Right: 0 ft.
Window 2x2 (center)21	North	3.3 ft.	0.0 ft.	Left: 0 ft., Right: 0 ft.
Window 2x2 (right)22	North	3.3 ft.	0.0 ft.	Left: 0 ft., Right: 0 ft.
Window 2x2 (far left)23	North	3.3 ft.	0.0 ft.	Left: 0 ft., Right: 0 ft.
Window 4x458	South	25.0 ft.	7.0 ft.	Left: 0 ft., Right: 12.0 ft.
Window 6x6138	North	3.0 ft.	0.0 ft.	Left: 0 ft., Right: 0 ft.
Window 6x6139	North	3.0 ft.	0.0 ft.	Left: 0 ft., Right: 0 ft.
Window 6x6140	North	3.0 ft.	0.0 ft.	Left: 0 ft., Right: 0 ft.

Project Name:	Santa Maria DMV	NRCC-PRF-01-E	Page 6 of 26
Project Address:	Santa Maria	Calculation Date/Time:	11:33, Wed, May 20, 2020
Input File Name:	140725 Santa Maria -- with plan area updates 10-6-18 (GAS AND ALL ECONMIZERS) - Copy UPDATED_With Lighting.cibd19x		

I2. OVERHANG DETAILS

1	2	3		4
Fenestration Tag/ID	Fenestration Orientation	Overhang Dimensions		Side fin
		Horizontal Projection	Distance Above Window	Vertical Projection
Window 6x6141	North	3.0 ft.	0.0 ft.	Left: 0 ft., Right: 0 ft.
Window 6x6142	North	3.0 ft.	0.0 ft.	Left: 0 ft., Right: 0 ft.
Window 6x6144	West	3.0 ft.	0.0 ft.	Left: 0 ft., Right: 0 ft.
Window 6x6145	West	3.0 ft.	0.0 ft.	Left: 0 ft., Right: 0 ft.
Door172	North	6.0 ft.	2.0 ft.	Left: 2.5 ft., Right: 2.5 ft.
Window1L (storefront) 1.6173	North	6.0 ft.	2.0 ft.	Left: 2.5 ft., Right: 0 ft.
Window1R (storefront) 1.6174	North	6.0 ft.	2.0 ft.	Left: 0 ft., Right: 2.5 ft.
Window1-top (storefront)175	North	6.0 ft.	0.0 ft.	Left: 2.5 ft., Right: 2.5 ft.
Window 6x6181	West	3.0 ft.	0.0 ft.	Left: 0 ft., Right: 0 ft.
Window 6x6183	South	3.0 ft.	0.0 ft.	Left: 0 ft., Right: 0 ft.
Window 6x6184	South	3.0 ft.	0.0 ft.	Left: 0 ft., Right: 0 ft.
Window 4x4214	South	12.0 ft.	3.0 ft.	Left: 0 ft., Right: 0 ft.
Window 4x4215	South	12.0 ft.	3.0 ft.	Left: 0 ft., Right: 0 ft.
Sliding Door 6x7216	South	12.0 ft.	3.0 ft.	Left: 0 ft., Right: 0 ft.
Window (3) 3x3218	East	12.0 ft.	3.0 ft.	Left: 0 ft., Right: 0 ft.
Window1 (storefront) 14.378	North	2.8 ft.	0.0 ft.	Left: 0 ft., Right: 0 ft.
Window2 (storefront) 14.379	North	2.5 ft.	0.0 ft.	Left: 0 ft., Right: 0 ft.
Window3 (storefront) 14.380	North	2.5 ft.	0.0 ft.	Left: 0 ft., Right: 0 ft.
Window4 (storefront) 14.381	North	2.5 ft.	0.0 ft.	Left: 0 ft., Right: 0 ft.
Window5 (storefront) 14.382	North	2.5 ft.	0.0 ft.	Left: 0 ft., Right: 0 ft.
Window6 (storefront) 14.383	North	3.5 ft.	5.7 ft.	Left: 0 ft., Right: 0 ft.
Window1L (storefront) 3.385	West	5.8 ft.	0.0 ft.	Left: 0 ft., Right: 0 ft.
Door 7x786	West	5.8 ft.	2.0 ft.	Left: 0 ft., Right: 0 ft.
Window1R (storefront) 3.387	West	5.8 ft.	0.0 ft.	Left: 0 ft., Right: 0 ft.
Window1C (storefront) 7w88	West	5.8 ft.	0.0 ft.	Left: 0 ft., Right: 0 ft.

Project Name:	Santa Maria DMV	NRCC-PRF-01-E	Page 7 of 26
Project Address:	Santa Maria	Calculation Date/Time:	11:33, Wed, May 20, 2020
Input File Name:	140725 Santa Maria -- with plan area updates 10-6-18 (GAS AND ALL ECONMIZERS) - Copy UPDATED_With Lighting.cibd19x		

I2. OVERHANG DETAILS

1	2	3		4
Fenestration Tag/ID	Fenestration Orientation	Overhang Dimensions		Side fin
		Horizontal Projection	Distance Above Window	Vertical Projection
Window2 (storefront) 14.389	West	2.5 ft.	0.0 ft.	Left: 0 ft., Right: 0 ft.
Window3 (storefront) 14.390	West	2.5 ft.	0.0 ft.	Left: 0 ft., Right: 0 ft.
Window4 (storefront) 14.391	West	2.5 ft.	0.0 ft.	Left: 0 ft., Right: 0 ft.
Window5 (storefront) 14.392	West	2.5 ft.	0.0 ft.	Left: 0 ft., Right: 0 ft.
Window6 (storefront) 14.393	West	3.5 ft.	5.7 ft.	Left: 0 ft., Right: 0 ft.
Window1 (storefront) 6w 995	East	11.0 ft.	0.0 ft.	Left: 5.0 ft., Right: 0 ft.
Window2 (storefront) 6w 196	East	3.5 ft.	5.7 ft.	Left: 5.0 ft., Right: 0 ft.
Window1 (storefront) 6w 998	West	11.0 ft.	0.0 ft.	Left: 0 ft., Right: 5.0 ft.
Window2 (storefront) 6w 199	West	3.5 ft.	5.7 ft.	Left: 0 ft., Right: 5.0 ft.
Window 6x6108	East	3.0 ft.	0.0 ft.	Left: 0 ft., Right: 0 ft.
Window 6x6112	South	3.0 ft.	0.0 ft.	Left: 0 ft., Right: 0 ft.
Window 6x6113	South	3.0 ft.	0.0 ft.	Left: 0 ft., Right: 0 ft.
Window 6x6114	South	3.0 ft.	0.0 ft.	Left: 0 ft., Right: 0 ft.
Window 6x6115	South	3.0 ft.	0.0 ft.	Left: 0 ft., Right: 0 ft.
Window 6x6118	East	3.0 ft.	0.0 ft.	Left: 0 ft., Right: 0 ft.
Window 6x6121	East	3.0 ft.	0.0 ft.	Left: 0 ft., Right: 0 ft.

I3. OPAQUE DOOR SUMMARY

1	2	3
Assembly Name	Overall U-factor	Status[1]
Wood Door32	0.500	N
Metal Door237	0.700	N

Project Name:	Santa Maria DMV	NRCC-PRF-01-E	Page 8 of 26
Project Address:	Santa Maria	Calculation Date/Time:	11:33, Wed, May 20, 2020
Input File Name:	140725 Santa Maria -- with plan area updates 10-6-18 (GAS AND ALL ECONMIZERS) - Copy UPDATED_With Lighting.cibd19x		

J. CRRC ROOFING PRODUCT SUMMARY S140.3

1	2	3	4	5
Assembly Name	Roof Pitch	Aged Solar Reflectance	Thermal Emittance	SRI
R-20 Spray w/ R-10 Rigid26	Low-Slope	0.83	0.90	Not Provided

K. HVAC SYSTEM SUMMARY §110.1 & §110.2

K1. Dry System Equipment (furnaces, air handling units, heat pumps, VRF, etc.)

Dry System Equipment [1] (Fan & Economizer info included below in Table N)

1	2	3	4	5	6	7	8	9	10
Equipment Name	Equipment Type	Qty	Heating				Cooling		Status[1]
			Total Heating Output (kBtu/h)	Supp Heat Source (Y/N)	Supp Heat Output (kBtuh)	Efficiency	Total Cooling Output (kBtu/h)	Efficiency	
AC-1	SZVAVAC (Packaged3Phase)	1	60	No	0	AFUE-78.0	36	SEER-20.10 / EER-13.00	N
AC-2	SZVAVAC (Packaged3Phase)	1	120	No	0	AFUE-80.0	90	EER-12.8	N
AC-3	SZVAVAC (Packaged3Phase)	1	120	No	0	AFUE-81.0	90	EER-12.8	N
AC-4	SZVAVAC (Packaged3Phase)	1	60	No	0	AFUE-80.0	45	SEER-19.40 / EER-13.60	N
AC-5	SZVAVAC (Packaged3Phase)	1	60	No	0	AFUE-78.0	36	SEER-20.10 / EER-13.00	N
AC-6	SZVAVAC (Packaged3Phase)	1	60	No	0	AFUE-78.0	34	SEER-20.10 / EER-13.00	N
FC-1	SZAC (CRAC)	1	0	No	0	Elec. Res.	23	SEER-21.40 / EER-12.20	N

[1] *Status: N - New, A – Altered, E – Existing*

IDENTIFICATION STAMP
DIV. OF THE STATE ARCHITECT
APP: 03-121324 INC:
REVIEWED FOR
SS ☐ FLS ☐ ACS ☑
DATE: 09/14/2022

OFFICE OF THE STATE FIRE MARSHAL
APPROVED FIRE AND PANIC ONLY
09/07/22
21-0233
Approval of this plan does not authorize or approve any omission or deviation from applicable regulations. Final approval is subject to field inspection. One set of approved plans shall be available on the project site at all times.

GENERAL SERVICES
Department of General Services
Architecture & Engineering Sections
State of California
Real Estate Services Division
Project Management & Development Branch
707 Third Street, Suite 4-105
West Sacramento, California 95605

LICENSED ARCHITECT
JEREMY K. KHOO
C-35651
REN. 05/31/23
STATE OF CALIFORNIA

DMV
State of California
Department of Motor Vehicles

Issue

No.	Date	Description
1	9/2/22	

Project
SANTA MARIA FIELD OFFICE REPLACEMENT
2770 SANTA MARIA WAY
SANTA MARIA, CA 93455
SANTA MARIA COUNTY
DEPT OF MOTOR VEHICLES

Supervisor	Designed	Drawn
MG	GP	JK

DSA App No. 03-121324
SFM Permit No. 21-S-0233-CP-ER

Sheet Title
TITLE 24 COMPLIANCE FORMS

Project Number
DGS000000140725

Sheet Scale
Sheet Number
G032

Copyright © 2020, California Department of General Services- Real Estate Services Division

C:\Projects\000000000140725_ARC_Project Master_22_Jeremy.Khoo58F93.rvt
7/12/2022 12:02:17 PM
RELATIVE BORDER SCALE IN INCHES 0 1 2 3

Project Name:	Santa Maria DMV	NRCC-PRF-01-E	Page 9 of 26
Project Address:	Santa Maria	Calculation Date/Time:	11:33, Wed, May 20, 2020
Input File Name:	140725 Santa Maria -- with plan area updates 10-6-18 (GAS AND ALL ECONMIZERS) - Copy UPDATED_With Lighting.cibd19x		

K2. ECONOMIZER & FAN SYSTEMS SUMMARY §140.4[1]

1	2	3	4	5	6	7	8	9	10	11	12	13
Name or Item Tag	System Type	Design OA	Supply Fan				Return Fan				Economizer Type (if present)	Status[1]
	packaged, DOAS, etc.	CFM	CFM	BHP	Watts	Control	CFM	BHP	Watts	Control		
AC-1	SZVAVAC	215	1320	0.750	654.0	VariableSpeedDrive	NA	NA	NA	NA	FixedDryBulb	N
AC-2	SZVAVAC	1513	3600	1.000	862.0	VariableSpeedDrive	NA	NA	NA	NA	FixedDryBulb	N
AC-3	SZVAVAC	1355	3300	1.000	862.0	VariableSpeedDrive	NA	NA	NA	NA	FixedDryBulb	N
AC-4	SZVAVAC	333	2500	1.000	862.0	VariableSpeedDrive	NA	NA	NA	NA	FixedDryBulb	N
AC-5	SZVAVAC	347	1440	0.750	654.0	VariableSpeedDrive	NA	NA	NA	NA	FixedDryBulb	N
AC-6	SZVAVAC	256	1080	0.750	850.2	VariableSpeedDrive	NA	NA	NA	NA	FixedDryBulb	N
FC-1	SZAC	25	775	2.351	2050.6	ConstantVolume	NA	NA	NA	NA	NoEconomizer	N

[1] *Status: N - New, A – Altered, E – Existing*

K3. EXHAUST FAN SUMMARY

1	2	3	4	5	6	7
System ID	Zone Name	Qty	CFM	Motor BHP	Motor Watts	Total Static Pressure (in H20)
Public Area 2124	3-Public Area 2	1	910	0.270	235.5	1.22
Employee Room197	5-Employee Room	1	1,320	0.620	540.7	1.94
Communications/Server Roo288	7-Communications/Server Roo	1	30	0.016	14.0	2.21

K4. Wet System Equipment (boilers, chillers, cooling towers, etc.)

1	2	3	4	5	6	7	8	9	10	11	12
Name or Item Tag	Equipment Type	Qty	Vol (gal)	Rated Capacity (kBtu/h)	Efficiency	Standby Loss	Pumps				Status[1]
							Qty	GPM	HP	VSD (Y/N)	

[1] *Status: N - New, A – Altered, E – Existing*

Project Name:	Santa Maria DMV	NRCC-PRF-01-E	Page 10 of 26
Project Address:	Santa Maria	Calculation Date/Time:	11:33, Wed, May 20, 2020
Input File Name:	140725 Santa Maria -- with plan area updates 10-6-18 (GAS AND ALL ECONMIZERS) - Copy UPDATED_With Lighting.cibd19x		

K5. SYSTEM FEATURES §120.2

1	2	3	4	5	6
System Name	Optimum Start	Window Interlocks per §140.4(n)	Evaporative Cooling	Heat Recovery	Other Controls
AC-1	No Optimum Start	NA	No Evaporative Cooler	No Heat Recovery	1 Zones With CO2Sensor Vent. Control, No DDC Fixed Drybulb Economizer No Supply Air Temp. Control
AC-2	No Optimum Start	NA	No Evaporative Cooler	No Heat Recovery	1 Zones With CO2Sensor Vent. Control, No DDC Fixed Drybulb Economizer No Supply Air Temp. Control
AC-3	No Optimum Start	NA	No Evaporative Cooler	No Heat Recovery	1 Zones With CO2Sensor Vent. Control, No DDC Fixed Drybulb Economizer No Supply Air Temp. Control
AC-4	No Optimum Start	NA	No Evaporative Cooler	No Heat Recovery	No DCV Controls, No DDC Fixed Drybulb Economizer No Supply Air Temp. Control
AC-5	No Optimum Start	NA	No Evaporative Cooler	No Heat Recovery	1 Zones With CO2Sensor Vent. Control, No DDC Fixed Drybulb Economizer No Supply Air Temp. Control
AC-6	No Optimum Start	NA	No Evaporative Cooler	No Heat Recovery	No DCV Controls, No DDC Fixed Drybulb Economizer No Supply Air Temp. Control
FC-1	No Optimum Start	NA	No Evaporative Cooler	No Heat Recovery	No DCV Controls, No DDC No Economizer No Supply Air Temp. Control
Eemax Elec1 - SHW	NA	NA	NA	NA	Fixed Temperature Control, No DDC

Notes: This table includes controls related to the performance path only. For projects using the prescriptive path, mandatory and prescriptive controls requirements are documented on the NRCC-MCH-E.

Project Name:	Santa Maria DMV	NRCC-PRF-01-E	Page 11 of 26
Project Address:	Santa Maria	Calculation Date/Time:	11:33, Wed, May 20, 2020
Input File Name:	140725 Santa Maria -- with plan area updates 10-6-18 (GAS AND ALL ECONMIZERS) - Copy UPDATED_With Lighting.cibd19x		

K6. MECHANICAL VENTILATION AND REHEAT §120.1

1	2	3	4	5	6	7	8	9
Zone Name	Mechanical Ventilation							DCV or Occupant Sensor Controls, or Both
	Ventilation Function	# hotel rooms	# of people	# of bedrooms	Supply OA CFM	Exhaust CFM	Conditioned Area (sf)	
1-Offices < 250	Office - Office space	0	7.15	0	215	0	1430	Both
2-Public Area 1	Misc - Transportation waiting	0	100.85	0	1513	0	1513	NA
3-Public Area 2	Misc - Transportation waiting	0	90.35	0	1355	910	4394	NA
4-Public Service Area	Office - Office space	0	19.98	0	333	0	2221	NA
5-Employee Room	General - Corridors	0	11.58	0	347	1320	2316	Both
6-Back of House	Office - Office space	0	8.52	0	256	0	1704	Occupant Sensor
7-Communications/Server Roo	Misc - All others	0	0.25	0	25	30	164	NA

K7. DISTRIBUTION SUMMARY §120.4/140.4(l)

1	2	3	4	5
Equipment Name	*Dry System Distribution*			Status[1]
	Duct Leakage Verification Y/N	Ducts		
		Insulation R-Value	Location	
AC-1	No	8	Conditioned	N
AC-2	No	8	Conditioned	N
AC-3	No	8	Conditioned	N
AC-4	No	8	Conditioned	N
AC-5	No	8	Conditioned	N
AC-6	No	8	Conditioned	N
FC-1	No	8	Conditioned	N

[1] *Status: N - New, E – Existing*

Multifamily or Hotel/Motel Occupancy? (if "Yes", see DOMESTIC/SERVICE HOT WATER SYSTEM SUMMARY)	No

Does the Project include Zonal Systems?	No

Project Name:	Santa Maria DMV	NRCC-PRF-01-E	Page 12 of 26
Project Address:	Santa Maria	Calculation Date/Time:	11:33, Wed, May 20, 2020
Input File Name:	140725 Santa Maria -- with plan area updates 10-6-18 (GAS AND ALL ECONMIZERS) - Copy UPDATED_With Lighting.cibd19x		

K8. ZONAL SYSTEM AND TERMINAL UNIT SUMMARY § 140.4

1	2	3	4	5	6	7	8	9	10	11	12
System ID	Zone Name	System Type	Rated Capacity (kBtuh)		Airflow (cfm)			Fan			
			Heating	Cooling	Design	Min.	Min. Ratio	BHP	Watts	Cycles	ECM Motor
1-Offices < 250-Trm	1-Offices < 250	VAVNoReheatBox	NA	NA	1320	960	0.73	NA	NA	NA	☐
2-Public Area 1-Trm	2-Public Area 1	VAVNoReheatBox	NA	NA	3600	1200	0.33	NA	NA	NA	☐
3-Public Area 2-Trm	3-Public Area 2	VAVNoReheatBox	NA	NA	3300	2100	0.64	NA	NA	NA	☐
4-Public Service Area-Trm	4-Public Service Area	VAVNoReheatBox	NA	NA	2500	1000	0.40	NA	NA	NA	☐
5-Employee Room-Trm	5-Employee Room	VAVNoReheatBox	NA	NA	1440	1000	0.69	NA	NA	NA	☐
6-Back of House-Trm	6-Back of House	VAVNoReheatBox	NA	NA	1080	600	0.56	NA	NA	NA	☐
7-Communications/Server Roo-Trm	7-Communications/Server Roo	Uncontrolled	NA	NA	775	NA	0.00	NA	NA	NA	☐

K9. EVAPORATIVE COOLER SUMMARY

This Section Does Not Apply

L. DOMESTIC/SERVICE HOT WATER SYSTEM SUMMARY

L1. DHW EQUIPMENT SUMMARY

1	2	3	4	5	6	7	8	9	10	11
DHW Name	Heater Element Type	Tank Type	Qty	Tank Vol (gal)	Rated Input (kBtu/h)	Efficiency	Tank Insulation R-value (Int/Ext)	Standby Loss Fraction	Heat Pump Type	Tank Location or Ambient Condition
Eemax EX42082	Electricity	Instantaneous	3	1.00	4.1 (kW)	UEF: 0.97	NA	SBLF: NA	NA	NA
Eemax PRO112403	Electricity	Instantaneous	3	1.00	8.3 (kW)	UEF: 0.99	NA	SBLF: NA	NA	NA

L2. MULTI-FAMILY CENTRAL DHW SYSTEM DETAILS

This Section Does Not Apply

IDENTIFICATION STAMP
DIV. OF THE STATE ARCHITECT
APP: 03-121324 INC:
REVIEWED FOR
SS ☐ FLS ☐ ACS ☑
DATE: 09/14/2022

OFFICE OF THE STATE FIRE MARSHAL
APPROVED FIRE AND PANIC ONLY
09/07/22
21-0233
Approval of this plan does not authorize or approve any omission or deviation from applicable regulations. Final approval is subject to field inspection. One set of approved plans shall be available on the project site at all times.

GENERAL SERVICES
Department of General Services
Architecture & Engineering Sections
State of California
Real Estate Services Division
Project Management & Development Branch
707 Third Street, Suite 4-105
West Sacramento, California 95605

LICENSED ARCHITECT
JEREMY K. KHOO
C-35651
REN. 05/31/23
STATE OF CALIFORNIA

DMV
State of California
Department of Motor Vehicles

Issue		
No.	Date	Description
1	9/2/22	

Project
SANTA MARIA FIELD OFFICE REPLACEMENT
2770 SANTA MARIA WAY
SANTA MARIA, CA 93455
SANTA MARIA COUNTY

DEPT OF MOTOR VEHICLES

Supervisor	Designed	Drawn
MG	GP	JK

DSA App No. 03-121324
SFM Permit No. 21-S-0233-CP-ER

Sheet Title
TITLE 24 COMPLIANCE FORMS

Project Number
DGS000000140725

Sheet Scale

Sheet Number
G033

Copyright © 2020, California Department of General Services- Real Estate Services Division

C:\Projects\000000000140725_ARC_Project Master_22_Jeremy.Khoo58F93.rvt
7/12/2022 12:02:20 PM

Project Name:	Santa Maria DMV	NRCC-PRF-01-E	Page 13 of 26
Project Address:	Santa Maria	Calculation Date/Time:	11:33, Wed, May 20, 2020
Input File Name:	140725 Santa Maria -- with plan area updates 10-6-18 (GAS AND ALL ECONMIZERS) - Copy UPDATED_With Lighting.cibd19x		

L3. SOLAR HOT WATER HEATING SUMMARY

This Section Does Not Apply

M. COVERED PROCESS SUMMARY §140.9

This Section Does Not Apply

N. INDOOR LIGHTING SUMMARY §140.6

N1. INDOOR CONDITIONED LIGHTING GENERAL INFO § 140.6[1]

						Confirmed	
1	2	3	4	5		Pass	Fail
Occupancy Type [1]	Conditioned Floor Area [2] (ft^2)	Installed Lighting Power (Watts)	Lighting Control Credits (Watts)	Additional (Custom) Allowance			
				Area Category Footnotes (Watts)	Tailored Method (Watts)	☐	☐
Office Area (<250 square feet)	3,134	1,607	0	0	0	☐	☐
Lounge, Breakroom, or Waiting Area	5,907	2,493	0	0	0	☐	☐
Office Area (Open plan office)	2,221	784	0	0	0	☐	☐
Corridor Area	2,316	854	0	0	0	☐	☐
Electrical, Mechanical, Telephone Rooms	164	144	0	0	0	☐	☐
Building Totals:	**13,742**	**5,882**	**0**	**0**	**0**		

[1] *See Table 140.6-C*

[2] *See NRCC-LTI-01-E for unconditioned spaces*

[3] *Lighting information for existing spaces modeled is not included in the table*

Project Name:	Santa Maria DMV	NRCC-PRF-01-E	Page 14 of 26
Project Address:	Santa Maria	Calculation Date/Time:	11:33, Wed, May 20, 2020
Input File Name:	140725 Santa Maria -- with plan area updates 10-6-18 (GAS AND ALL ECONMIZERS) - Copy UPDATED_With Lighting.cibd19x		

N2. INDOOR CONDITIONED LIGHTING SCHEDULE § 130.0[1]

Luminaire Schedule (includes all permanent installed lighting in conditioned space, and portable lighting over 0.3 w/ft^2 in offices)		Installed Watts (Conditioned)					Confirmed	
			How Wattage is Determined					
Name or Item Tag	Complete Luminaire Description (i.e., 3-lamp fluorescent troffer, F32T8, one dimmable electronic ballast)	Watts per luminaire	CEC Default from NA8	According to §130.0(c)	Total Number Luminaires	Installed Watts	Pass	Fail
A1	H7 Twin Head	27	No	Yes	4	108	☐	☐
A1.0	A1.0 2x2 Ceiling	28	No	Yes	4	112	☐	☐
A1.1	A1.1 2x2 Ceiling	28	No	Yes	4	112	☐	☐
A1.2	A1.2 2x2 Ceiling	28	No	Yes	4	112	☐	☐
A2	A2 2x2 Ceiling	32	No	Yes	46	1,472	☐	☐
A3	A3 2x2 Ceiling	37	No	Yes	4	148	☐	☐
B1	B1	36	No	Yes	4	144	☐	☐
B2	B2	27	No	Yes	4	108	☐	☐
B3	B3	36	No	Yes	9	324	☐	☐
B4	B4	17	No	Yes	13	221	☐	☐
C1	C1 2x2 Ceiling	20	No	Yes	11	220	☐	☐
C2	C2 2x2 Ceiling	28	No	Yes	1	28	☐	☐
C3	C3 2x2 Ceiling	39	No	Yes	2	78	☐	☐
D1	D1	27	No	Yes	9	243	☐	☐
D2	D2	20	No	Yes	1	20	☐	☐
E1	E1 Under Cabinet	10	No	Yes	4	40	☐	☐
F1	F1 Skylight Kit	54	No	Yes	7	378	☐	☐
I2	I2	23	No	Yes	2	46	☐	☐
I3	I3	47	No	Yes	14	658	☐	☐
I4	I4	20	No	Yes	16	320	☐	☐
J1	J1/J2 6' LED Pend	165	No	Yes	6	990	☐	☐

[1] *If lighting power densities were used in the compliance model Building Departments will need to check prescriptive forms for Luminaire Schedule details.*

Project Name:	Santa Maria DMV	NRCC-PRF-01-E	Page 15 of 26
Project Address:	Santa Maria	Calculation Date/Time:	11:33, Wed, May 20, 2020
Input File Name:	140725 Santa Maria -- with plan area updates 10-6-18 (GAS AND ALL ECONMIZERS) - Copy UPDATED_With Lighting.cibd19x		

N3. INDOOR CONDITIONED LIGHTING CONTROL CREDITS § 140.6

Lighting Control Credits Schedule (includes all lighting controls installed in conditioned space for compliance credit per §140.6(a)2 and Table 140.6-A)				Control Credit Calculation			√ If Acceptance Test Required	Confirmed	
Location in Building	Occupancy Type (must meet requirements of Table 140.6-A)	Type/Description of Lighting Control (i.e., partial on occupancy sensor, manual dimming, etc.)	# of Units	Watts of Controlled Lighting	Power Adjustment Factor	Control Credit Watts		Pass	Fail
S-1-Offices < 250	Office Area (<250 square feet)	- none specified -- none specified -- none specified -- none specified -- none specified -	0		0.000.000.000.000.00	0		☐	☐
S-1-Offices < 250	Office Area (<250 square feet)	- none specified -- none specified -- none specified -- none specified -- none specified -	0		0.000.000.000.000.00	0		☐	☐
S-1-Offices < 250	Office Area (<250 square feet)	- none specified -- none specified -- none specified -- none specified -- none specified -	0		0.000.000.000.000.00	0		☐	☐
S-1-Offices < 250	Office Area (<250 square feet)	- none specified -- none specified -- none specified -- none specified -- none specified -	0		0.000.000.000.000.00	0		☐	☐
S-1-Offices < 250	Office Area (<250 square feet)	- none specified -- none specified -- none specified -- none specified -- none specified -	0		0.000.000.000.000.00	0		☐	☐
S-1-Offices < 250	Office Area (<250 square feet)	- none specified -- none specified -- none specified -- none specified -- none specified -	0		0.000.000.000.000.00	0		☐	☐
S-1-Offices < 250	Office Area (<250 square feet)	- none specified -- none specified -- none specified -- none specified -- none specified -	0		0.000.000.000.000.00	0		☐	☐
S-1-Offices < 250	Office Area (<250 square feet)	- none specified -- none specified -- none specified -- none specified -- none specified -	0		0.000.000.000.000.00	0		☐	☐
S-3-Public Area 2	Lounge, Breakroom, or Waiting Area	- none specified -- none specified -- none specified -- none specified -- none specified -	0		0.000.000.000.000.00	0		☐	☐
S-3-Public Area 2	Lounge, Breakroom, or Waiting Area	- none specified -- none specified -- none specified -- none specified -- none specified -	0		0.000.000.000.000.00	0		☐	☐

Project Name:	Santa Maria DMV	NRCC-PRF-01-E	Page 16 of 26
Project Address:	Santa Maria	Calculation Date/Time:	11:33, Wed, May 20, 2020
Input File Name:	140725 Santa Maria -- with plan area updates 10-6-18 (GAS AND ALL ECONMIZERS) - Copy UPDATED_With Lighting.cibd19x		

N3. INDOOR CONDITIONED LIGHTING CONTROL CREDITS § 140.6

Lighting Control Credits Schedule (includes all lighting controls installed in conditioned space for compliance credit per §140.6(a)2 and Table 140.6-A)				Control Credit Calculation			√ If Acceptance Test Required	Confirmed	
Location in Building	Occupancy Type (must meet requirements of Table 140.6-A)	Type/Description of Lighting Control (i.e., partial on occupancy sensor, manual dimming, etc.)	# of Units	Watts of Controlled Lighting	Power Adjustment Factor	Control Credit Watts		Pass	Fail
S-3-Public Area 2	Lounge, Breakroom, or Waiting Area	- none specified -- none specified -- none specified -- none specified -- none specified -	0		0.000.000.000.000.00	0		☐	☐
S-3-Public Area 2	Lounge, Breakroom, or Waiting Area	- none specified -- none specified -- none specified -- none specified -- none specified -	0		0.000.000.000.000.00	0		☐	☐
S-3-Public Area 2	Lounge, Breakroom, or Waiting Area	- none specified -- none specified -- none specified -- none specified -- none specified -	0		0.000.000.000.000.00	0		☐	☐
S-3-Public Area 2	Lounge, Breakroom, or Waiting Area	- none specified -- none specified -- none specified -- none specified -- none specified -	0		0.000.000.000.000.00	0		☐	☐
S-3-Public Area 2	Lounge, Breakroom, or Waiting Area	- none specified -- none specified -- none specified -- none specified -- none specified -	0		0.000.000.000.000.00	0		☐	☐
S-3-Public Area 2	Lounge, Breakroom, or Waiting Area	- none specified -- none specified -- none specified -- none specified -- none specified -	0		0.000.000.000.000.00	0		☐	☐
S-3-Public Area 2	Lounge, Breakroom, or Waiting Area	- none specified -- none specified -- none specified -- none specified -- none specified -	0		0.000.000.000.000.00	0		☐	☐
S-4-Public Service Area	Office Area (Open plan office)	- none specified -- none specified -- none specified -- none specified -- none specified -	0		0.000.000.000.000.00	0		☐	☐
S-4-Public Service Area	Office Area (Open plan office)	- none specified -- none specified -- none specified -- none specified -- none specified -	0		0.000.000.000.000.00	0		☐	☐

IDENTIFICATION STAMP
DIV. OF THE STATE ARCHITECT
APP: 03-121324 INC:
REVIEWED FOR
SS ☐ FLS ☐ ACS ☑
DATE: 09/14/2022

OFFICE OF THE STATE FIRE MARSHAL
APPROVED FIRE AND PANIC ONLY
09/07/22
21-0233
Approval of this plan does not authorize or approve any omission or deviation from applicable regulations. Final approval is subject to field inspection. One set of approved plans shall be available on the project site at all times.

DGS GENERAL SERVICES
Department of General Services
Architecture & Engineering Sections
State of California
Real Estate Services Division
Project Management & Development Branch
707 Third Street, Suite 4-105
West Sacramento, California 95605

LICENSED ARCHITECT
JEREMY K. KHOO
C-35651
REN. 05/31/23
STATE OF CALIFORNIA

DMV
State of California
Department of Motor Vehicles

Issue

No.	Date	Description
1	9/2/22	

Project

SANTA MARIA FIELD OFFICE REPLACEMENT

2770 SANTA MARIA WAY
SANTA MARIA, CA 93455
SANTA MARIA COUNTY

DEPT OF MOTOR VEHICLES

Supervisor	Designed	Drawn
MG	GP	JK

DSA App No.	SFM Permit No.
03-121324	21-S-0233-CP-ER

Sheet Title
TITLE 24 COMPLIANCE FORMS

Project Number
DGS000000140725

Sheet Scale

Sheet Number
G034

Copyright © 2020, California Department of General Services- Real Estate Services Division

C:\Projects\000000000140725_ARC_Project Master_22_Jeremy.Khoo58F93.rvt
7/12/2022 12:02:22 PM
RELATIVE BORDER SCALE IN INCHES

17

Project Name:	Santa Maria DMV	NRCC-PRF-01-E	Page 17 of 26
Project Address:	Santa Maria	Calculation Date/Time:	11:33, Wed, May 20, 2020
Input File Name:	140725 Santa Maria -- with plan area updates 10-6-18 (GAS AND ALL ECONMIZERS) - Copy UPDATED_With Lighting.cibd19x		

N3. INDOOR CONDITIONED LIGHTING CONTROL CREDITS § 140.6

Lighting Control Credits Schedule (includes all lighting controls installed in conditioned space for compliance credit per §140.6(a)2 and Table 140.6-A)

Location in Building	Occupancy Type (must meet requirements of Table 140.6-A)	Type/Description of Lighting Control (i.e., partial on occupancy sensor, manual dimming, etc.)	# of Units	Control Credit Calculation: Watts of Controlled Lighting	Control Credit Calculation: Power Adjustment Factor	Control Credit Calculation: Control Credit Watts	√ If Acceptance Test Required	Confirmed: Pass	Confirmed: Fail
S-5-Employee Room	Corridor Area	- none specified -- none specified -- none specified -- none specified -- none specified -	0		0.000.000.000.000.00	0		☐	☐
S-5-Employee Room	Corridor Area	- none specified -- none specified -- none specified -- none specified -- none specified -	0		0.000.000.000.000.00	0		☐	☐
S-5-Employee Room	Corridor Area	- none specified -- none specified -- none specified -- none specified -- none specified -	0		0.000.000.000.000.00	0		☐	☐
S-5-Employee Room	Corridor Area	- none specified -- none specified -- none specified -- none specified -- none specified -	0		0.000.000.000.000.00	0		☐	☐
S-5-Employee Room	Corridor Area	- none specified -- none specified -- none specified -- none specified -- none specified -	0		0.000.000.000.000.00	0		☐	☐
S-5-Employee Room	Corridor Area	- none specified -- none specified -- none specified -- none specified -- none specified -	0		0.000.000.000.000.00	0		☐	☐
S-5-Employee Room	Corridor Area	- none specified -- none specified -- none specified -- none specified -- none specified -	0		0.000.000.000.000.00	0		☐	☐
S-5-Employee Room	Corridor Area	- none specified -- none specified -- none specified -- none specified -- none specified -	0		0.000.000.000.000.00	0		☐	☐
S-5-Employee Room	Corridor Area	- none specified -- none specified -- none specified -- none specified -- none specified -	0		0.000.000.000.000.00	0		☐	☐

18

Project Name:	Santa Maria DMV	NRCC-PRF-01-E	Page 18 of 26
Project Address:	Santa Maria	Calculation Date/Time:	11:33, Wed, May 20, 2020
Input File Name:	140725 Santa Maria -- with plan area updates 10-6-18 (GAS AND ALL ECONMIZERS) - Copy UPDATED_With Lighting.cibd19x		

N3. INDOOR CONDITIONED LIGHTING CONTROL CREDITS § 140.6

Lighting Control Credits Schedule (includes all lighting controls installed in conditioned space for compliance credit per §140.6(a)2 and Table 140.6-A)

Location in Building	Occupancy Type (must meet requirements of Table 140.6-A)	Type/Description of Lighting Control (i.e., partial on occupancy sensor, manual dimming, etc.)	# of Units	Control Credit Calculation: Watts of Controlled Lighting	Control Credit Calculation: Power Adjustment Factor	Control Credit Calculation: Control Credit Watts	√ If Acceptance Test Required	Confirmed: Pass	Confirmed: Fail
S-5-Employee Room	Corridor Area	- none specified -- none specified -- none specified -- none specified -- none specified -	0		0.000.000.000.000.00	0		☐	☐
S-5-Employee Room	Corridor Area	- none specified -- none specified -- none specified -- none specified -- none specified -	0		0.000.000.000.000.00	0		☐	☐
S-5-Employee Room	Corridor Area	- none specified -- none specified -- none specified -- none specified -- none specified -	0		0.000.000.000.000.00	0		☐	☐
S-5-Employee Room	Corridor Area	- none specified -- none specified -- none specified -- none specified -- none specified -	0		0.000.000.000.000.00	0		☐	☐
S-6-Back of House	Office Area (<250 square feet)	- none specified -- none specified -- none specified -- none specified -- none specified -	0		0.000.000.000.000.00	0		☐	☐
S-6-Back of House	Office Area (<250 square feet)	- none specified -- none specified -- none specified -- none specified -- none specified -	0		0.000.000.000.000.00	0		☐	☐
S-6-Back of House	Office Area (<250 square feet)	- none specified -- none specified -- none specified -- none specified -- none specified -	0		0.000.000.000.000.00	0		☐	☐
S-6-Back of House	Office Area (<250 square feet)	- none specified -- none specified -- none specified -- none specified -- none specified -	0		0.000.000.000.000.00	0		☐	☐
S-6-Back of House	Office Area (<250 square feet)	- none specified -- none specified -- none specified -- none specified -- none specified -	0		0.000.000.000.000.00	0		☐	☐
S-6-Back of House	Office Area (<250 square feet)	- none specified -- none specified -- none specified -- none specified -- none specified -	0		0.000.000.000.000.00	0		☐	☐

19

Project Name:	Santa Maria DMV	NRCC-PRF-01-E	Page 19 of 26
Project Address:	Santa Maria	Calculation Date/Time:	11:33, Wed, May 20, 2020
Input File Name:	140725 Santa Maria -- with plan area updates 10-6-18 (GAS AND ALL ECONMIZERS) - Copy UPDATED_With Lighting.cibd19x		

N3. INDOOR CONDITIONED LIGHTING CONTROL CREDITS § 140.6

Lighting Control Credits Schedule (includes all lighting controls installed in conditioned space for compliance credit per §140.6(a)2 and Table 140.6-A)

Location in Building	Occupancy Type (must meet requirements of Table 140.6-A)	Type/Description of Lighting Control (i.e., partial on occupancy sensor, manual dimming, etc.)	# of Units	Control Credit Calculation: Watts of Controlled Lighting	Control Credit Calculation: Power Adjustment Factor	Control Credit Calculation: Control Credit Watts	√ If Acceptance Test Required	Confirmed: Pass	Confirmed: Fail
S-6-Back of House	Office Area (<250 square feet)	- none specified -- none specified -- none specified -- none specified -- none specified -	0		0.000.000.000.000.00	0		☐	☐
S-7-Communications/Server Roo	Electrical, Mechanical, Telephone Rooms	- none specified -- none specified -- none specified -- none specified -- none specified -	0		0.000.000.000.000.00	0		☐	☐
S-2-Public Area 1	Lounge, Breakroom, or Waiting Area	- none specified -- none specified -- none specified -- none specified -- none specified -	0		0.000.000.000.000.00	0		☐	☐
S-2-Public Area 1	Lounge, Breakroom, or Waiting Area	- none specified -- none specified -- none specified -- none specified -- none specified -	0		0.000.000.000.000.00	0		☐	☐
S-2-Public Area 1	Lounge, Breakroom, or Waiting Area	- none specified -- none specified -- none specified -- none specified -- none specified -	0		0.000.000.000.000.00	0		☐	☐
S-2-Public Area 1	Lounge, Breakroom, or Waiting Area	- none specified -- none specified -- none specified -- none specified -- none specified -	0		0.000.000.000.000.00	0		☐	☐

N4: INDOOR CONDITIONED LIGHTING MANDATORY LIGHTING CONTROLS § 130.1

This Section Does Not Apply

§130.1(a) = Manual area controls; §130.0(b) = Multi Level; §130.1(c) = Auto Shut-Off; §130.1(d) = Mandatory Daylight; §130.1(e) = Demand Responsive

N5. TAILORED METHOD CONDITIONED LIGHTING POWER ALLOWANCE SUMMARY AND CHECKLIST § 140.6

General lighting power (see Table D)	0
General lighting power from special function areas (see Table E)	NA
Additional "use it or lose it" (See Table G)	0
Total watts	0

20

Project Name:	Santa Maria DMV	NRCC-PRF-01-E	Page 20 of 26
Project Address:	Santa Maria	Calculation Date/Time:	11:33, Wed, May 20, 2020
Input File Name:	140725 Santa Maria -- with plan area updates 10-6-18 (GAS AND ALL ECONMIZERS) - Copy UPDATED_With Lighting.cibd19x		

N6. GENERAL LIGHTING POWER § 140.6-D

This Section Does Not Apply

N7. GENERAL LIGHTING FROM SPECIAL FUNCTION AREAS § 140.6(c) 3H

Room Number	Primary Function Area	Illuminance Value (LUX)	Room Cavity Ratio (Table G)	Allowed LPD	Floor Area (ft^2)	Allowed Watts	Confirmed: Pass	Confirmed: Fail
NA	NA	NA	NA	NA	NA	NA	☐	☐

Note: Tailored Method for Special Function Areas is not currently implemented

N8. ROOM CAVITY RATIO

Rectangular Spaces

Room Number	Task/Activity Description	Room Length (ft)	Room Width (ft)	Room Cavity Height (ft)	RCR	Confirmed: Pass	Confirmed: Fail
NA	NA	NA	NA	NA	NA	☐	☐

Non-Rectangular Spaces

This Section Does Not Apply

Note: All applicable spaces are listed under the Non-Rectangular Spaces table

N9. ADDITIONAL "USE IT OR LOSE IT"

1. Wall Display	2. Combined Floor Display and Task Lighting	3. Combined Ornamental and Special Effects Lighting	4. Very Valuable Merchandise	Allowed Watts	Confirmed: Pass	Confirmed: Fail
0	0	0	0	**0**	☐	☐

N10. Wall Display

This Section Does Not Apply

N11. Floor Display and Task Lighting

This Section Does Not Apply

IDENTIFICATION STAMP
DIV. OF THE STATE ARCHITECT
APP: 03-121324 INC:
REVIEWED FOR
SS ☐ FLS ☐ ACS ☑
DATE: 09/14/2022

OFFICE OF THE STATE FIRE MARSHAL
APPROVED FIRE AND PANIC ONLY
09/07/22
21-0233
Approval of this plan does not authorize or approve any omission or deviation from applicable regulations. Final approval is subject to field inspection. One set of approved plans shall be available on the project site at all times.

DGS GENERAL SERVICES

Department of General Services
Architecture & Engineering Sections
State of California
Real Estate Services Division
Project Management & Development Branch
707 Third Street, Suite 4-105
West Sacramento, California 95605

LICENSED ARCHITECT
JEREMY K. KHOO
C-35651
REN. 05/31/23
STATE OF CALIFORNIA

DMV
State of California
Department of Motor Vehicles

Issue

No.	Date	Description
1	9/2/22	

Project
SANTA MARIA FIELD OFFICE REPLACEMENT
2770 SANTA MARIA WAY
SANTA MARIA, CA 93455
SANTA MARIA COUNTY

DEPT OF MOTOR VEHICLES

Supervisor	Designed	Drawn
MG	GP	JK

DSA App No. 03-121324
SFM Permit No. 21-S-0233-CP-ER

Sheet Title
TITLE 24 COMPLIANCE FORMS

Project Number
DGS000000140725

Sheet Scale
Sheet Number
G035

Copyright © 2020, California Department of General Services- Real Estate Services Division

C:\Projects\000000000140725_ARC_Project Master_22_Jeremy.Khoo58F93.rvt
7/12/2022 12:02:25 PM

Project Name:	Santa Maria DMV	NRCC-PRF-01-E	Page 21 of 26
Project Address:	Santa Maria	Calculation Date/Time:	11:33, Wed, May 20, 2020
Input File Name:	140725 Santa Maria -- with plan area updates 10-6-18 (GAS AND ALL ECONMIZERS) - Copy UPDATED_With Lighting.cibd19x		

N12. Combined Ornamental and Special Effects Lighting

This Section Does Not Apply

N13. Very Valuable Merchandise

This Section Does Not Apply

N14. INDOOR & OUTDOOR LIGHTING ACCEPTANCE TESTS & FORMS § 130.4

Declaration of Required Acceptance Certificates (NRCA) –Acceptance Certificates that must be verified in the field. (Retain copies and verify forms are completed and signed to post in field for Field Inspector to verify).

Test Description		Indoor			Outdoor	Confirmed	
		NRCA-LTI-02-A	NRCA-LTI-03-A	NRCA-LTI-04-A	NRCA-LTO-02-A		
Equipment Requiring Testing or Verification	# of units	Occ Sensors / Auto Time Switch	Auto Daylight	Demand Responsive	Outdoor Controls	Pass	Fail
Occupant Sensors	0	☒	☐	☐	☐	☐	☐
Automatic Time Switch	0	☒	☐	☐	☐	☐	☐
Automatic Daylighting	0	☐	☐	☐	☐	☐	☐
Demand Responsive	1	☐	☐	☒	☐	☐	☐
Outdoor Controls	0	☐	☐	☐	☐	☐	☐

Project Name:	Santa Maria DMV	NRCC-PRF-01-E	Page 22 of 26
Project Address:	Santa Maria	Calculation Date/Time:	11:33, Wed, May 20, 2020
Input File Name:	140725 Santa Maria -- with plan area updates 10-6-18 (GAS AND ALL ECONMIZERS) - Copy UPDATED_With Lighting.cibd19x		

O. DECLARATION OF REQUIRED CERTIFICATES OF INSTALLATION

Table Instructions: Selections shall be made by Documentation Author to indicate which Certificates of Installation must be submitted for the features to be recognized for compliance. These documents bust be retained and provided to the building inspector during construction and can be found online at: https://www.energy.ca.gov/title24/2019standards/2019_compliance_documents/Nonresidential_Documents/NRCI/

Building Component	YES	NO	Form/Title	Field Inspector	
				Pass	Fail
Envelope	☒	☐	NRCI-ENV-01-E - Must be submitted for all buildings	☐	☐
Mechanical	☒	☐	NRCI-MCH-01-E - Must be submitted for all buildings	☐	☐
Plumbing	☒	☐	NRCI-PLB-01-E - Must be submitted for all buildings	☐	☐
	☐	☒	NRCI-PLB-02-E - Must be submitted for high-rise residential and hotel/ motel central hot water distribution systems to be recognized for compliance	☐	☐
	☐	☒	NRCI-PLB-03-E - Must be submitted for high-rise residential and hotel/motel single dwelling unit hot water system distribution systems to be recognized for compliance	☐	☐
	☐	☒	NRCI-PLB-21-E - Must be HERS verified for central systems in high-rise residential hotel/ motel application	☐	☐
	☐	☒	NRCI-PLB-22-E - Must be HERS verified for single dwelling unit systems in high-rise residential, hotel/motel application	☐	☐
	☐	☒	NRCI-STH-01-E - Must be submitted for solar hot water heating systems	☐	☐
Indoor Lighting	☒	☐	NRCI-LTI-01-E - Must be submitted for all buildings	☐	☐
	☐	☒	NRCI-LTI-02-E - Must be submitted for a lighting control system, or for an Energy Management Control System (EMCS) to be recognized for compliance	☐	☐
	☐	☒	NRCI-LTI-04-E - Must be submitted for two interlocked systems serving an auditorium, a convention center, a conference room, a multipurpose room, or a theater to be recognized for compliance	☐	☐
	☐	☒	NRCI-LTI-05-E - Must be submitted for a Power Adjustment Factor (PAF) to be recognized for compliance	☐	☐
	☐	☒	NRCI-LTI-06-E - Must be submitted for additional wattage installed in a video conferencing studio to be recognized for compliance	☐	☐
Covered Process	☐	☒	NRCI-PRC-01-E - Must be submitted for all Covered Processes	☐	☐

Project Name:	Santa Maria DMV	NRCC-PRF-01-E	Page 23 of 26
Project Address:	Santa Maria	Calculation Date/Time:	11:33, Wed, May 20, 2020
Input File Name:	140725 Santa Maria -- with plan area updates 10-6-18 (GAS AND ALL ECONMIZERS) - Copy UPDATED_With Lighting.cibd19x		

P. DECLARATION OF REQUIRED CERTIFICATES OF ACCEPTANCE

Table Instructions: Selections shall be made by Documentation Author to indicate which Certificates of Acceptance must be submitted for the features to be recognized for compliance. These documents must be provided to the building inspector during construction and must be completed through an Acceptance Test Technician Certification Provider (ATTCP). For more information visit:https://www.energy.ca.gov/title24/2019standards/2019_compliance_documents/Nonresidential_Documents/NRCA/

Building Component	YES	NO	Form/Title	Field Inspector	
				Pass	Fail
Envelope	☒	☐	NRCA-ENV-02-F - NRFC label verification for fenestration	☐	☐
	☐	☐	NRCA-ENV-03-F - Daylighting Design PAFs	☐	☐
Indoor Lighting	☒	☐	NRCA-LTI-02-A - Occupancy Sensors and Automatic Time Switch Controls	☐	☐
	☐	☒	NRCA-LTI-03-A - Automatic Daylight Controls	☐	☐
	☒	☐	NRCA-LTI-04-A - Demand Responsive Lighting Controls	☐	☐
	☐	☒	NRCA-LTI-05-A - Institutional Tuning Power Adjustment Factor (PAF)	☐	☐
Covered Process	☐	☒	NRCA-PRC-02-F - Kitchen Exhaust	☐	☐
	☐	☒	NRCA-PRC-03-F - Garage Exhaust	☐	☐
	☐	☒	NRCA-PRC-12-F – Elevator Lighting and Ventilation Controls	☐	☐
	☐	☒	NRCA-PRC-13-F –Escalator and Moving Walkways Speed Control	☐	☐
	☐	☒	NRCA-PRC-14-F – Lab Exhaust Ventilation System	☐	☐
	☐	☒	NRCA-PRC-15-F - Fume Hood Automatic Sash Closures System	☐	☐

Project Name:	Santa Maria DMV	NRCC-PRF-01-E	Page 24 of 26
Project Address:	Santa Maria	Calculation Date/Time:	11:33, Wed, May 20, 2020
Input File Name:	140725 Santa Maria -- with plan area updates 10-6-18 (GAS AND ALL ECONMIZERS) - Copy UPDATED_With Lighting.cibd19x		

P. DECLARATION OF REQUIRED CERTIFICATES OF ACCEPTANCE

Table Instructions: Selections shall be made by Documentation Author to indicate which Certificates of Acceptance must be submitted for the features to be recognized for compliance. These documents must be provided to the building inspector during construction and must be completed through an Acceptance Test Technician Certification Provider (ATTCP). For more information visit:https://www.energy.ca.gov/title24/2019standards/2019_compliance_documents/Nonresidential_Documents/NRCA/

Building Component	YES	NO	Form/Title	Field Inspector	
				Pass	Fail
Mechanical	☒	☐	NRCA-MCH-02-A Outdoor Air must be submitted for all newly installed HVAC units. Note: MCH02-A can be performed in conjunction with MCH-07-A Supply Fan VFD Acceptance (if applicable) since testing activities overlap	☐	☐
	☒	☐	NRCA-MCH-03-A Constant Volume Single Zone HVAC	☐	☐
	☐	☒	NRCA-MCH-04(a)-H Air Distribution Duct Leakage - HERS Verification required	☐	☐
	☐	☐	NRCA-MCH-04(b)-A Air Distribution Duct Leakage - ATT only	☐	☐
	☒	☐	NRCA-MCH-05-A Air Economizer Controls	☐	☐
	☒	☐	NRCA-MCH-06-A Demand Control Ventilation Systems Acceptance must be submitted for all systems required to employ demand controlled ventilation (refer to §120.1(c)3) can vary outside ventilation flow rates based on maintaining interior carbon dioxide (CO2) concentration setpoints	☐	☐
	☒	☐	NRCA-MCH-07-A Supply Fan Variable Flow Controls	☐	☐
	☐	☒	NRCA-MCH-08-A Valve Leakage Test	☐	☐
	☐	☒	NRCA-MCH-09-A Supply Water Temperature Reset Controls	☐	☐
	☐	☒	NRCA-MCH-10-A Hydronic System Variable Flow Controls	☐	☐
	☐	☒	NRCA-MCH-11-A Automatic Demand Shed Controls	☐	☐
	☒	☐	NRCA-MCH-12-A FDD for Packaged Direct Expansion Units	☐	☐
	☐	☒	NRCA-MCH-13-A Automatic FDD for Air Handling Units and Zone Terminal Units Acceptance	☐	☐
	☐	☒	NRCA-MCH-14-A Distributed Energy Storage DX AC Systems Acceptance	☐	☐
	☐	☒	NRCA-MCH-15-A Thermal Energy Storage (TES) System Acceptance	☐	☐
	☐	☒	NRCA-MCH-16-A Supply Air Temperature Reset Controls	☐	☐
	☐	☒	NRCA-MCH-17-A Condenser Water Temperature Reset Controls	☐	☐
	☐	☒	NRCA-MCH-18 Energy Management Control Systems	☐	☐
	☐	☒	NRCA-MCH-19 Occupancy Sensor Controls	☐	☐

IDENTIFICATION STAMP
DIV. OF THE STATE ARCHITECT
APP: 03-121324 INC:
REVIEWED FOR
SS ☐ FLS ☐ ACS ☑
DATE: 09/14/2022

OFFICE OF THE STATE FIRE MARSHAL
APPROVED FIRE AND PANIC ONLY
09/07/22
21-0233
Approval of this plan does not authorize or approve any omission or deviation from applicable regulations. Final approval is subject to field inspection. One set of approved plans shall be available on the project site at all times.

GENERAL SERVICES
Department of General Services
Architecture & Engineering Sections
State of California
Real Estate Services Division
Project Management & Development Branch
707 Third Street, Suite 4-105
West Sacramento, California 95605

LICENSED ARCHITECT
JEREMY K. KHOO
C-35651
REN. 05/31/23
STATE OF CALIFORNIA

DMV
State of California
Department of Motor Vehicles

Issue

No.	Date	Description
1	9/2/22	

Project
SANTA MARIA FIELD OFFICE REPLACEMENT
2770 SANTA MARIA WAY
SANTA MARIA, CA 93455
SANTA MARIA COUNTY

DEPT OF MOTOR VEHICLES

Supervisor	Designed	Drawn
MG	GP	JK

DSA App No. 03-121324
SFM Permit No. 21-S-0233-CP-ER

Sheet Title
TITLE 24 COMPLIANCE FORMS

Project Number
DGS000000140725

Sheet Scale
Sheet Number
G036

Copyright © 2020, California Department of General Services- Real Estate Services Division

C:\Projects\000000000140725_ARC_Project Master_22_Jeremy.Khoo58F93.rvt
7/12/2022 12:02:28 PM

RELATIVE BORDER SCALE IN INCHES

Project Name:	Santa Maria DMV	NRCC-PRF-01-E	Page 25 of 26
Project Address:	Santa Maria	Calculation Date/Time:	11:33, Wed, May 20, 2020
Input File Name:	140725 Santa Maria -- with plan area updates 10-6-18 (GAS AND ALL ECONMIZERS) - Copy UPDATED_With Lighting.cibd19x		

Q. DECLARATION OF REQUIRED CERTIFICATES OF VERIFICATION

Table Instructions: Selections shall be made by Documentation Author to indicate which Certificates of Verification must be submitted for the features to be recognized for compliance. These documents bust be retained and provided to the building inspector during construction and can be found online at:
https://www.energy.ca.gov/title24/2019standards/2019_compliance_documents/Nonresidential_Documents/NRCV/

Building Component	YES	NO	Form/Title	Field Inspector Pass	Field Inspector Fail
Mechanical	☐	☒	NRCV-MCH-04-H Duct Leakage Test	☐	☐
	☐	☒	NRCV-MCH-24-H Enclosure Air Leakage	☐	☐
	☐	☒	NRCV-MCH-27 Indoor Air Quality & Mechanical Ventilation	☐	☐
	☐	☒	NRCV-MCH-32-H Local Mechanical Exhaust	☐	☐
Plumbing	☐	☒	NRCV-PLB-21-H - HERS verified central systems in high-rise residential, hotel/motel application	☐	☐
	☐	☒	NRCV-PLB-22-H - HERS verified single dwelling unit systems in high-rise residential, hotel/motel application	☐	☐

R. UNMET LOAD HOURS

This Section Does Not Apply

Project Name:	Santa Maria DMV	NRCC-PRF-01-E	Page 26 of 26
Project Address:	Santa Maria	Calculation Date/Time:	11:33, Wed, May 20, 2020
Input File Name:	140725 Santa Maria -- with plan area updates 10-6-18 (GAS AND ALL ECONMIZERS) - Copy UPDATED_With Lighting.cibd19x		

DOCUMENTATION AUTHOR'S DECLARATION STATEMENT

I certify that this Certificate of Compliance documentation is accurate and complete.

Documentation Author Name: Jennifer Rennick	Signature:
Company: In Balance Green Consulting	
Address: 1015 Nipomo Street Ste 200	Signature Date: 2020-05-20
City/State/Zip: San Luis Obispo CA 93401	CEA/ HERS Certification Identification (if applicable):
Phone: 805 423-8359	

RESPONSIBLE PERSON'S DECLARATION STATEMENT

I certify the following under penalty of perjury, under the laws of the State of California:

1. The information provided on this Certificate of Compliance is true and correct.
2. I am eligible under Division 3 of the Business and Professions Code to accept responsibility for the building design or system design identified on this Certificate of Compliance (responsible designer)
3. The energy features and performance specifications, materials, components, and manufactured devices for the building design or system design identified on this Certificate of Compliance conform to the requirements of Title 24, Part 1 and Part 6 of the California Code of Regulations.
4. The building design features or system design features identified on this Certificate of Compliance are consistent with the information provided on other applicable compliance documents, worksheets, calculations, plans and specifications submitted to the enforcement agency for approval with this building permit application.
5. I will ensure that a completed signed copy of this Certificate of Compliance shall be made available with the building permit(s) issued for the building, and made available to the enforcement agency for all applicable inspections. I understand that a completed signed copy of this Certificate of Compliance is required to be included with the documentation the builder provides to the building owner at occupancy.

Responsible Envelope Designer Name: Dept of General Services	Signature:	
Company: DGS		
Address:	Date Signed:	
City/State/Zip: Sacramento CA		
Phone:	Title:	License #:
Responsible Lighting Designer Name:	Signature:	
Company:		
Address:	Date Signed:	
City/State/Zip:		
Phone:	Title:	License #:
Responsible Mechanical Designer Name: - specify -	Signature:	
Company:		
Address:	Date Signed:	
City/State/Zip:		
Phone:	Title:	License #:

IDENTIFICATION STAMP
DIV. OF THE STATE ARCHITECT
APP: 03-121324 INC:
REVIEWED FOR
SS ☐ FLS ☐ ACS ☑
DATE: 09/14/2022

OFFICE OF THE STATE FIRE MARSHAL
APPROVED FIRE AND PANIC ONLY
09/07/22
21-0233
Approval of this plan does not authorize or approve any omission or deviation from applicable regulations. Final approval is subject to field inspection. One set of approved plans shall be available on the project site at all times.

DGS GENERAL SERVICES

Department of General Services
Architecture & Engineering Sections
State of California
Real Estate Services Division
Project Management & Development Branch
707 Third Street, Suite 4-105
West Sacramento, California 95605

LICENSED ARCHITECT
JEREMY K. KHOO
C-35651
REN. 05/31/23
STATE OF CALIFORNIA

DMV
State of California
Department of Motor Vehicles

Issue

No.	Date	Description
1	9/2/22	

Project
SANTA MARIA FIELD OFFICE REPLACEMENT

2770 SANTA MARIA WAY
SANTA MARIA, CA 93455
SANTA MARIA COUNTY

DEPT OF MOTOR VEHICLES

Supervisor	Designed	Drawn
MG	GP	JK

DSA App No.	SFM Permit No.
03-121324	21-S-0233-CP-ER

Sheet Title
TITLE 24 COMPLIANCE FORMS

Project Number
DGS000000140725

Sheet Scale

Sheet Number
G037

Copyright © 2020, California Department of General Services- Real Estate Services Division

C:\Projects\000000000140725_ARC_Project Master_22_Jeremy.Khoo58F93.rvt
7/12/2022 12:02:31 PM

RELATIVE BORDER SCALE IN INCHES

A5.602 NON-RESIDENTIAL MANDATORY CALGREEN CHECKLIST

ITEM #	REQUIREMENT	SECTION TITLE	CODE SECTION	YES	N/A	OTHER	PLAN SHEET #, SPECS OR REFERENCE
CHAPTER 5							
5.1 PLANNING AND DESIGN							
1	MANDATORY	STORM WATER POLLUTION PREVENTION FOR PROJECTS THAT DISTURB LESS THAN 1 ACRE OF LAND.	5.106.1 THROUGH 5106.2	X			
2	MANDATORY	SHORT-TERM BICYCLE PARKING (WITH EXCEPTION)	5.106.4.1.1	X			
3	MANDATORY	LONG-TERM BICYCLE PARKING	5.106.4.1.2 THROUGH 5.106.4.1.5	X			
4	MANDATORY	DESIGNATED PARKING FOR CLEAN AIR VEHICLES	5.106.5.2	X			
5	MANDATORY	PARKING STALL MARKING	5.106.5.2.1	X			
6	MANDATORY	SINGLE CHARGING SPACE REQUIREMENTS	5.106.5.3.1	X			
7	MANDATORY	MULTIPLE CHARGING SPACE REQUIREMENTS [N]	55.106.5.3.2	X			
8	MANDATORY	EV CHARGING SPACE CALCULATION [N] (WITH EXCEPTION)	5.106.5.3.3	X			
9	MANDATORY	[N] IDENTIFICATION	5.106.5.3.4	X			
10	MANDATORY	[N] FUTURE CHARGING SPACES	5.106.5.3.5	X			
11	MANDATORY	LIGHT POLLUTION REDUCTION [N] (WITH EXCEPTIONS AND NOTES)	5.106.8	X			
12	MANDATORY	GRADING AND PAVING (EXCEPTION FOR ADDITIONS AND ALTERATIONS NOT ALTERING THE DRAINAGE PATH)	5.106.10	X			
5.2 ENERGY EFFICIENCY							
13	MANDATORY	MEET THE MINIMUM ENERGY EFFICIENCY STANDARD	5.201.1	X			
5.3 WATER EFFICIENCY AND CONSERVATION							
14	MANDATORY	SEPARATE METERS (NEW BUILDING OR ADDITIONS > 50,00 SF THAT CONSUMES MORE THAN 1,000 GAL/DAY)	5.303.3.1		X		
15	MANDATORY	SEPARATE METERS (FOR TENANTS IN NEW BUILDINGS OR ADDITIONS THAT CONSUMES MORE THAN 1,000 GAL/DAY)	5.303.1.2		X		
16	MANDATORY	WATER CLOSETS SHALL NOT EXCEED 1.28 GALLONS PER FLUSH (GPF)	5.303.3.1	X			
17	MANDATORY	WALL-MOUNTED URINALS SHALL NOT EXCEED 0.125 GPF	5.303.3.2.1	X			
18	MANDATORY	FLOOR-MOUNTED URINALS SHALL NOT EXCEED 0.5 GPF	5.303.3.2.2		X		
19	MANDATORY	SINGLE SHOWERHEAD SHALL HAVE MAXIMUM FLOW RATE OF 1.8 GPM (GALLONS PER MINUTE) AT 80 PSI	5.303.3.3.1	X			
20	MANDATORY	MULITPLE SHOWERHEADS SERVING ONE SHOWER SHALL HAVE A COMBINED FLOW RATE OF 1.8 GPM AT 80 PSI	5.303.3.3.2		X		
21	MANDATORY	NONRESIDENTIAL LAVATORY FAUCETS	5.303.3.4.1	X			
22	MANDATORY	KITCHEN FAUCETS	5.303.3.4.2	X			
23	MANDATORY	WASH FOUNTAINS	5.303.3.4.3		X		
24	MANDATORY	METERING FAUCETS	5.303.3.4.4	X			
25	MANDATORY	METERING FAUCETS FOR WASH FOUNTAINS	5.303.3.4.5		X		
26	MANDATORY	FOOD WASTE DISPOSERS	5.303.4.1	X			
27	MANDATORY	AREA OF ADDITIONS OR ALTERATIONS	5.303.5		X		
28	MANDATORY	STANDARDS FOR PLUMBING FIXTURES AND FITTINGS	5.303.6	X			
29	MANDATORY	OUTDOOR POTABLE WATER USE IN LANDSCAPE AREAS	5.304.1	X			
30	MANDATORY	OUTDOOR WATER SUPPLY SYSTEMS (WITH EXCEPTIONS 1-4)	5.305.1.1	X			
31	MANDATORY	TECHINAL REQUIREMENTS FOR OUTDOOR RECYCLED WATER SUPPLY SYSTEMS	5.305.1.2	X			
5.4 MATERIAL CONSERVATION AND RESOURCE EFFICIENCY							
32	MANDATORY	WEATHER PROTECTION	5.407.1	X			
33	MANDATORY	MOISTURE CONTROL: SPRINKLERS	5.407.2.1	X			
34	MANDATORY	MOISTURE CONTROL: EXTERIOR DOOR PROTECTION	5.407.2.2.1	X			
35	MANDATORY	MOISTURE CONTROL: FLASHING	5.407.2.2.2	X			
36	MANDATORY	CONSTRUCTION WASTE MANAGEMENT - COMPLY WITH EITHER: SECTIONS 5.408.1.1, 5.408.1.2. 5.408.1.3 OR MORE STRINGENT LOCAL ORDINANCE	5.408.1.1, 5.408.1.2, 5.408.1.3	X			
37	MANDATORY	CONSTRUCTION WASTE MANAGEMENT: DOCUMENTATION	5.408.1.4	X			
38	MANDATORY	UNIVERSAL WASTE [A]	5.408.2	X			
39	MANDATORY	EXCAVATED SOIL AND LAND CLEARING DEBRIS (100% REUSE OR RECYCLE)	5.408.3	X			
40	MANDATORY	RECYCLING BY OCCUPANTS (WITH EXCEPTION)	5.410.1	X			
41	MANDATORY	RECYCLING BY OCCUPANTS: ADDITIONS (WITH EXCEPTION)	5.410.1.1	X			
42	MANDATORY	RECYCLING BY OCCUPANTS: SAMPLE ORDINANCE	5.410.1.2	X			
43	MANDATORY	COMMISSIONING NEW BUILDINGS (≥ 10,000 SF) [N]	5.410.2	X			
44	MANDATORY	OWNER'S OR OWNER REPRESENTATIVE'S PROJECT REQUIREMENT (OPR)[N]	5.410.2.1	X			
45	MANDATORY	BASIS OF DESIGN (BOD)[N]	5.410.2.2	X			
46	MANDATORY	COMMISSIONING PLAN [N]	5.410.2.3	X			
47	MANDATORY	FUNCTIONAL PERFORMANCE TESTING [N]	5.410.2.4	X			
48	MANDATORY	DOCUMENTATION AND TRAINING [N]	5.410.2.5	X			
49	MANDATORY	SYSTEMS MANUAL [N]	5.410.2.5.1	X			
50	MANDATORY	SYSTEMS OPERATION TRAINING [N]	5.410.2.5.2	X			
51	MANDATORY	COMMISSIONING REPORT [N]	5.410.2.6	X			
52	MANDATORY	TESTING AND ADJUSTING FOR NEW BUILDINGS < 10,000 SF OR NEW SYSTEMS THAT SERVE ADDITIONS OR ALTERATIONS [A]	5.410.4	X			
53	MANDATORY	SYSTEMS TESTING PLAN FOR RENEWABLE ENERGY, LANDSCAPE IRRIGATION AND WATER REUSE [A]	5.410.4.2	X			
54	MANDATORY	PROCEDURES FOR TESTING AND ADJUSTING	5.410.4.3	X			
55	MANDATORY	PROCEDURES FOR HVAC BALANCING	5.410.4.3.1	X			
56	MANDATORY	REPORTING FOR TESTING AND ADJUSTING	5.410.4.4	X			
57	MANDATORY	OPERATION AND MAINTENANCE (O&M) MANUAL	5.410.4.5	X			
58	MANDATORY	INSPECTION AND REPORTS	5.410.4.5.1	X			
5.5 ENVIRONMENTAL QUALITY							
59	MANDATORY	FIREPLACES	5.503.1		X		
60	MANDATORY	WOODSTOVES	5.503.1.1		X		
61	MANDATORY	TEMPORARY VENTILATION	5.504.1		X		
62	MANDATORY	COVERING OF DUCTS OPENING AND PROTECTION OF MECHANICAL EQUIPMENT DURING CONSTRUCTION	5.504.3	X			
63	MANDATORY	ADHESIVES, SEALANTS, AND CAULKS	5.504.4.1	X			
64	MANDATORY	PAINTS AND COATINGS	5.504.4.3	X			
65	MANDATORY	AEROSOL PAINTS AND COATINGS	5.504.4.3.1	X			

A5.602 NON-RESIDENTIAL MANDATORY CALGREEN CHECKLIST

ITEM #	REQUIREMENT	SECTION TITLE	CODE SECTION	YES	N/A	OTHER	PLAN SHEET #, SPECS OR REFERENCE
66	MANDATORY	AEROSOL PAINTS AND COATINGS: VERIFICATION	5.504.4.3.2	X			
67	MANDATORY	CARPET SYSTEMS	5.504.4.4	X			
68	MANDATORY	CARPET CUSHION	5.504.4.4.1	X			
69	MANDATORY	CARPET ADHESIVES PER TABLE 5.504.4.1	5.504.4.4.2	X			
70	MANDATORY	COMPOSITE WOOD PRODUCTS	5.504.4.5	X			
71	MANDATORY	COMPOSITE WOOD PRODUCTS DOCUMENTATION	5.504.4.5.3	X			
72	MANDATORY	RESILIENT FLOORING SYSEMS	5.504.4.6	X			
73	MANDATORY	RESILIENT FLOORING: VERIFICATION OF COMPLIANCE	5.504.4.6.1	X			
74	MANDATORY	FILTERS (WITH EXCEPTIONS)	5.504.5.3	X			
75	MANDATORY	FILTERS: LABELING	5.504.5.3.1	X			
76	MANDATORY	ENVIRONMENTAL TOBACCO SMOKE (ETS) CONTROL	5.504.7	X			
77	MANDATORY	INDOOR MOISTURE CONTROL	5.505.1	X			
78	MANDATORY	OUTSIDE AIR DELIVERY	5.506.1	X			
79	MANDATORY	CARBON DIOXIDE (CO2) MONITORING	5.506.2	X			
80	MANDATORY	ACOUSTICAL CONTROL (WITH EXCEPTION)	5.507.4	X			
81	MANDATORY	EXTERIOR NOISE TRANSMISSION, PRESCRIPTIVE METHOD (WITH EXCEPTIONS)	5.507.4.1	X			
82	MANDATORY	NOISE EXPOSURE WHERE NOISE CONTOURS ARE NOT READILY AVAILABLE	5.507.4.1.1	X			
83	MANDATORY	PERFORMANCE METHOD	5.507.4.2	X			
84	MANDATORY	SITE FEATURES	5.507.4.2.1	X			
85	MANDATORY	DOCUMENTATION OF COMPLIANCE	5.507.4.2.2	X			
86	MANDATORY	INTERIORS SOUND TRANSMISSION (WITH NOTE)	5.507.4.3	X			
87	MANDATORY	OZONE DEPLETION AND GREENHOUSE GAS REDUCTIONS	5.508.1	X			
88	MANDATORY	CHLOROFLUOROCARBONS (CFCS)	5.508.1.1	X			
89	MANDATORY	HALONS	5.508.1.2	X			
90	MANDATORY	SUPERMARKET REFRIGERANT LEAK REDUCTION FOR RETAIL FOOD STORES 8,000 SF OR MORE SECTIONS 5.508.2 THROUGH 5.508.2.6.3	5.508.2 THROUGH 5.508.2.6.3		X		
END OF MANDATORY PROVISIONS							
91		END OF MANDATORY PROVISIONS					

THE USE OF THIS CHECKLIST APPLIES TO:

1. NEWLY CONSTRUCTED BUILDINGS
2. ADDITIONS OF 1,000 SQUARE FEET OR GREATER
3. BUILDING ALTERATIONS WITH A PERMIT VALUATION OF $200,000 OR ABOVE (FOR OCCUPANCIES WITHIN THE AUTHORITY OF CALIFORNIA BUILDING STANDARDS COMMISSION)
4. ADDITIONS AND ALTERATIONS: CALGREEN ONLY APPLIES TO THE PORTIONS OF THE BUILDING BEING ADDED OR ALTERED WITHIN THE SCOPE OF THE PERMITTED WORK.
5. **PUBLIC SCHOOLS AND COMMUNITY COLLEGES (SEE DSA GL-4)**
   A. NEW SITE: COMPLY WITH CHAPTER 5 AS ADOPTED BY DSA-SS
   B. EXISTING SITE: COMPLY WITH SECTION 301.4.2.
      - NEWLY CONSTRUCTED SITE WORK: COMPLY WITH CHAPTER 5 AS ADOPTED BY DSA-SS.
      - NEWLY CONSTRUCTED BUILDINGS: COMPLY WITH CHAPTER 5 AS ADOPTED BY DSA-SS AND SECTION 301.4.3.
      - ADDITIONS TO EXISTING BUILDINGS: COMPLY WITH SECTION 301.4.3
      - REHABILITATED LANDSCAPE AREAS: COMPLY WITH SECTIONS 5.304.6 AND 5.106.12.
   C. MINIMUM REHABILITATED LANDSCAPE AREA REQUIREMENT
      - A MINIMUM REHABILITATED LANDSCAPE AREA EQUAL TO 75% OF THE FOOTPRINT AREA OF THE BUILDING SHALL COMPLY WITH SECTION 5.304.6 AND SECTION 5.106.12.
      - NEW BUILDINGS OR ADDITIONS TO EXISTING BUILDINGS LESS THAN 1,600 SQUARE FEET SHALL NOT BE REQUIRED TO COMPLY WITH SECTION 301.4.3.

IDENTIFICATION STAMP
DIV. OF THE STATE ARCHITECT
APP: 03-121324 INC:
REVIEWED FOR
SS ☐ FLS ☐ ACS ☑
DATE: 09/14/2022

OFFICE OF THE STATE FIRE MARSHAL
APPROVED FIRE AND PANIC ONLY
09/07/22
21-0233
Approval of this plan does not authorize or approve any omission or deviation from applicable regulations. Final approval is subject to field inspection. One set of approved plans shall be available on the project site at all times.

DGS GENERAL SERVICES
Department of General Services
Architecture & Engineering Sections
State of California
Real Estate Services Division
Project Management & Development Branch
707 Third Street, Suite 4-105
West Sacramento, California 95605

LICENSED ARCHITECT
JEREMY K. KHOO
C-35651
REN. 05/31/23
STATE OF CALIFORNIA

DMV
State of California
Department of Motor Vehicles

Issue

No.	Date	Description
1	9/2/22	

Project
SANTA MARIA FIELD OFFICE REPLACEMENT
2770 SANTA MARIA WAY
SANTA MARIA, CA 93455
SANTA MARIA COUNTY

DEPT OF MOTOR VEHICLES

Supervisor	Designed	Drawn
Approver	Designer	Author

DSA App No. 03-121324
SFM Permit No. 21-S-0233-CP-ER

Sheet Title
BLDG A CALGREEN NON-RESIDENTIAL CHECKLIST

Project Number
DGS000000140725

Sheet Scale
Sheet Number
G042

© Copyright © 2020, California Department of General Services, Real Estate Services Division

C:\Projects\000000000000140725_ARC_Project Master_22_Jeremy Khoo58F893.rvt
7/12/2022 12:02:34 PM

RELATIVE BORDER SCALE IN INCHES

ABBREVIATIONS AND LEGEND

Δ	DELTA ANGLE
AC	ASPHALT CONCRETE
APCD	AIR POLLUTION CONTROL DISTRICT
APPROX.	APPROXIMATELY
AQMD	AIR QUALITY MANAGEMENT DISTRICT
ASTM	AMERICAN SOCIETY FOR TESTING AND MATERIALS
BLDG	BUILDING
BMP'S	BEST MANAGEMENT PRACTICES
BP	ALIGNMENT BEGINNING
CARB	CALIFORNIA AIR RESOURCES BOARD
CBC	CALIFORNIA BUILDING CODE
CFC	CALIFORNIA FIRE CODE
CL	CENTER LINE
CLR	CLEAR
CONC	CONCRETE
CONT	CONTINUOUS
CP	CONTROL POINT
DIA	DIAMETER
DWG	DRAWING
E	EASTING OR EAST
(E)	EXISTING
ELEV	ELEVATION
EP	ALIGNMENT END
FG	FINISH GRADE
FL	FLOW LINE
GB	GRADE BREAK
L	LENGTH
LF	LINEAR FEET
MAX	MAXIMUM
Mid	MID ORDINATE
MIN	MINIMUM
MG	MATCH GRADE
MH	MANHOLE
N	NORTHING OR NORTH
(N)	NEW
NIC	NOT IN CONTRACT
NTS	NOT TO SCALE
OC	ON CENTERS
OCEW	ON CENTER, EACH WAY
PC	POINT OF CURVATURE
PCC	COMPOUND CURVE INTERSECTION
PL	PROPERTY LINE
PT	POINT OF TANGENCY
R	RADIUS
REF	REFERENCE
S	SOUTH
SD	STORM DRAIN
SPEC	SPECIFIED
SPECS	SPECIFICATIONS
SWPPP	STORM WATER POLLUTION PREVENTION PLAN
TC	TOP OF CONCRETE/CURB
TW	TOP OF WALK
TYP	TYPICAL
V	VALLEY
W	WEST

KEYNOTE WITH NUMBER

SECTION NOTE WITH NUMBER

GENERAL CIVIL NOTES

1. CONTRACTOR SHALL PROVIDE AND MAINTAIN PUBLIC ACCESS TO ADJACENT PUBLIC ROADWAY AND BIKE PATH AT ALL TIMES DURING THE CONSTRUCTION PERIOD.
2. CONTRACTOR SHALL COMPLY WITH CALIFORNIA FIRE CODE, CHAPTER 33, FIRE SAFETY DURING CONSTRUCTION.
3. STATE APPROVAL OF THESE PLANS DOES NOT AUTHORIZE OR APPROVE ANY OMISSION OR DEVIATION FROM APPLICABLE REGULATIONS. THE CONTRACTOR SHALL BE RESPONSIBLE FOR REPORTING ALL CONCERNS INCLUDING, BUT NOT LIMITED TO, CONFLICTS, ERRORS AND OMISSIONS TO THE STATE IMMEDIATELY UPON DISCOVERY.
4. THE CONTRACTOR IS RESPONSIBLE FOR SITE CONDITIONS INCLUDING PUBLIC SAFETY CONTINUALLY DURING THE CONTRACT PERIOD.
5. THE CONTRACTOR IS RESPONSIBLE FOR THE MAINTENANCE OR REPAIR OF OFFSITE STREET SURFACES WHERE DAMAGE HAS BEEN SUSTAINED BECAUSE OF THE CONSTRUCTION OPERATIONS.
6. CONTRACTOR SHALL PROVIDE SHOP DRAWINGS FOR CONCRETE JOINT INSTALLATION SHOWING EXTERIOR WALKS, SLABS, CURBS, GUTTERS, DRIVEWAYS, PARKING AND ROADWAYS FOLLOWING SPECIFICATION 32 13 73. EXPANSION JOINTS SHALL BE INSTALLED AT FOUNDATIONS, FOOTINGS, CURB FACES, CURB RETURNS, AND AT AN INTERVAL NO GREATER THAN 30–FEET AND AS DEPICTED ON SHEET C101 AND RELATED DETAILS. CONCRETE SEATING AND BARRIERS SHALL INCLUDE EXPANSION JOINTS AT ALL DIRECTION CHANGES, CURVE TANGENTS AND AT INTERVALS NO GREATER THAN 30–FEET AND AS DEPICTED ON SHEET C101 AND RELATED DETAILS.

DEMOLITION, GRADING AND LAYOUT NOTES

1. CONTRACTOR SHALL OBTAIN CITY PERMIT, PROVIDE TRAFFIC CONTROL AND RECEIVE CITY ACCEPTANCE FOR WORK WITHIN CITY PROPERTY
2. PCC CONCRETE SURFACES SHALL BE SAWCUT NEATLY IN STRAIGHT VERTICAL AND PARALLEL LINES FOLLOWING THE EXISTING JOINTS.
3. CONTRACTOR SHALL BE RESPONSIBLE FOR PROTECTION OF (E) BELOWGROUND AND ABOVEGROUND UTILITY LINES, UTILITY BOXES, BOLLARDS, LIGHT POLES, BENCHES, FIXTURES AND OTHER SITE AND SURROUNDING IMPROVEMENTS DURING CONSTRUCTION. CONTRACTOR SHALL FIX ANY DAMAGE TO THESE ITEMS AND IMPROVEMENTS RESULTING FROM CONSTRUCTION OPERATIONS AT HIS/HER EXPENSE.
4. ADJUST EXISTING MANHOLES AND VALVE/DRAIN BOXES TO FINISH GRADE.
5. CONTRACTOR SHALL NOT STOCKPILE GRINDINGS, SOIL, CONC OR ANY OTHER CONSTRUCTION DEBRIS ONSITE.
6. LOCATIONS OF EXISTING UTILITIES AND STRUCTURES ARE FROM BEST INFORMATION AVAILABLE. EXACT LOCATIONS AND COMPLETENESS ARE NOT GUARANTEED. EXPOSE AND VERIFY LOCATIONS, ELEVATIONS AND STATUS OF EXISTING UNDERGROUND UTILITIES PRIOR TO CONSTRUCTION. UTILIZE INDEPENDENT UNDERGROUND UTILITY LOCATION SERVICE TO STAKE LOCATIONS OF EXISTING UTILITIES.
7. THE CONTRACTOR SHALL BE RESPONSIBLE FOR ANY DAMAGE TO EXISTING UTILITIES DURING CONSTRUCTION. ALL EXISTING UTILITIES AND IMPROVEMENTS THAT ARE DAMAGED DURING CONSTRUCTION SHALL BE COMPLETELY RESTORED TO STATE'S SATISFACTION.
8. CONTRACTOR SHALL PROTECT ALL EXISTING SURVEY MONUMENTS AND OTHER SURVEY MARKERS DURING CONSTRUCTION. ALL SUCH MARKERS OR MONUMENTS DESTROYED DURING CONSTRUCTION SHALL BE REPLACED AND RE–ESTABLISHED AT THE CONTRACTOR'S EXPENSE. RE–ESTABLISHMENT OF SURVEY MONUMENTS SHALL BE IN ACCORDANCE WITH THE CALIFORNIA STATE LAND SURVEYOR'S ACT.
9. THE CONTRACTOR SHALL TAKE FIELD MEASUREMENTS AND VERIFY FIELD CONDITIONS AND SHALL COMPARE SUCH FIELD MEASUREMENTS, CONDITIONS AND OTHER RELATED INFORMATION KNOWN TO THE CONTRACTOR WITH THE CONTRACT DOCUMENTS BEFORE COMMENCING WITH THE WORK. ANY INCONSISTENCIES DISCOVERED SHALL BE IMMEDIATELY REPORTED TO THE STATE IN WRITING.
10. CONTRACTOR SHALL SUBMIT SHOP DRAWINGS TO STATE FOR REVIEW AND APPROVAL FOR P.C.C. JOINT LAYOUTS.
11. CONTRACTOR SHALL REVIEW AND FOLLOW THE GRADING REQUIREMENTS AS NOTED IN THESE PLANS AND WITHIN THE STATE'S GEOTECHNICAL REPORT.

EROSION CONTROL NOTES

1. CONTRACTOR SHALL DESIGN AND IMPLEMENT A STORM WATER POLLUTION PREVENTION PLAN (SWPPP) TO PREVENT ALL CONSTRUCTION POLLUTANTS FROM CONTACTING STORM WATER AND KEEP ALL PRODUCTS OF EROSION FROM MOVING OFF–SITE AND ENTERING RECEIVING WATERS. CONTRACTOR SHALL SUBMIT THE SWPPP TO THE STATE FOR APPROVAL PRIOR TO START OF CONSTRUCTION. SEE SPECIFICATION SECTION 31 25 00.
2. ALL EROSION & SEDIMENT CONTROL BEST MANAGEMENT PRACTICES (BMP) SHALL BE IN ACCORDANCE WITH THE APPROVED SWPPP AND CALIFORNIA STORMWATER QUALITY ASSOCIATION (CASQA) CONSTRUCTION BMP HANDBOOK.
3. EROSION AND SEDIMENT CONTROL BMP's SHALL BE INSTALLED AND MAINTAINED ALL YEAR ROUND.
4. ALL WORK EQUIPMENT SHALL BE WASHED AT A LOCATION OFF THE PROJECT SITE.
5. STRAW WATTLES SHALL BE PLACED IN APPROPRIATE AREAS TO PREVENT SILT/SEDIMENT FROM ENTERING STORM DRAIN FOR DURATION OF PROJECT.
6. CONTRACTOR SHALL PROTECT EXISTING DRAINAGE IMPROVEMENTS DURING CONTRACT PERIOD AND REMOVE ALL CONSTRUCTION DEBRIS PRIOR TO FINAL INSPECTION.
7. IN PREPARATION FOR RAIN EVENTS, ANY LOOSE SEDIMENTS/SILT OR OTHER MATERIALS SHALL BE COVERED WITH WOVEN FABRIC OR OTHER COMPARABLE METHODS AND SURROUNDED BY STRAW WATTLES AND/OR GRAVEL BAGS.
8. THE CONTRACTOR IS RESPONSIBLE FOR DUST CONTROL DURING ALL PHASES OF CONSTRUCTION. WATER, OR OTHER APPROVED METHODS SHALL BE USED TO CONTROL WINDBLOWN DUST AND PARTICLES. DUST AND PARTICLES SHALL NOT LEAVE THE CONSTRUCTION SITE. DUST CONTROL SHALL BE UTILIZED OVER ALL DISTURBED AREAS (UNLESS SUITABLY STABILIZED) REGARDLESS OF WHETHER ACTIVE WORK IS UNDERWAY. THE FOLLOWING MEASURE SHALL BE IMPLEMENTED:
   - 8.1. MINIMIZE THE AMOUNT OF DISTURBED AREA. THE AMOUNT OF MATERIAL ACTIVELY WORKED, AND THE AMOUNT OF MATERIAL STOCKPILED
   - 8.2. SWEEP OR WASH PAVED STREETS ADJACENT TO PROJECT CONSTRUCTION SITES AT LEAST ONCE A DAY TO REMOVE ACCUMULATED DUST/DEBRIS.
   - 8.3. MAINTAIN AT LEAST TWO FEET OF FREEBOARD WHEN TRANSPORTING SOIL OR OTHER MATERIAL BY TRUCK.

ACCESS COMPLIANCE NOTES

1. COMPLY WITH THE REQUIREMENTS OF THESE PLANS AND CBC. THESE PLANS ARE DESIGNED AND DETAILED TO MEET OR EXCEED CBC REQUIREMENTS. COMPLETED WORK THAT DOES NOT COMPLY WITH THESE PLANS AND CBC SHALL BE RECONSTRUCTED TO THE STATES SATISFACTION. CONTRACTOR SHALL HAVE FOREMAN AND LABORERS EXPERIENCED IN FINISHED SURFACES, AS REQUIRED IN THESE PLANS, COMPLYING WITH CBC ACCESSIBLE ROUTES. ALL WORK SHALL BE CHECKED WITH A CALIBRATED DIGITAL LEVEL SET TO PERCENT (%) GRADE HAVING AN ACCURACY OF 0.1% (+/–).
2. COMPLY WITH GRADING PLAN SURFACE ELEVATIONS AND SLOPES. CROSS SLOPE ON WALKWAYS SHALL BE 1.5% MAX. UNLESS SHOWN DIFFERENTLY ON THESE PLANS. RIDGES AND VALLEYS IN FINISH WORK CAUSING SLOPES TO BE OUT OF COMPLIANCE WITH THESE PLANS OR CBC SHALL BE GROUNDS FOR REJECTION AND SHALL BE REMOVED TO EDGE OF WALK OR NEAREST JOINT. GRINDING OR GROUT FILLING SHALL NOT BE APPROVED METHODS TO CORRECT WORK.
3. NO CHANGES IN LEVEL GREATER THAN 1/2" SHALL BE ALLOWED WITHOUT A RAMP AS DEFINED IN CBC 11B–405 OR 11B–406. CHANGES IN LEVEL BETWEEN 1/4" AND 1/2" SHALL BE BEVELED WITH A SLOPE NO GREATER THAN 1:2. UPON STATES APPROVAL.
4. ACCESSIBLE ROUTE AS INDICATED ON THESE PLANS IS A BARRIER FREE ROUTE WITHOUT ANY ABRUPT VERTICAL CHANGES EXCEEDING 1/2" AT 1:2 MAXIMUM SLOPE, EXCEPT THAT LEVEL CHANGES DO NOT EXCEED 1/4" VERTICAL. ACCESSIBLE ROUTE IS A MINIMUM OF 50" WIDE SLIP RESISTANT SURFACE WITH 4.5% MAX. RUNNING SLOPE AND 1.5% MAX. CROSS SLOPE, TYPICAL UNLESS SHOWN DIFFERENTLY ON THESE PLANS. AN ACCESSIBLE ROUTE EXCEEDING 4.5% RUNNING SLOPE SHALL BE REVIEWED BY THE STATE FOR APPROVAL. SLOPE EXCEEDING 5% SHALL COMPLY WITH A RAMP AS DEFINED IN CBC 11B–405 EXCEPT FOR SIDEWALK ADJACENT TO STREETS. THERE SHALL BE NO DROP–OFF GREATER THAN 4" AT THE EDGE OF WALK OR LANDINGS ALLOWED UNLESS ADJACENT TO A STREET OR DRIVEWAY. CONTRACTOR SHALL VERIFY THAT ALL BARRIERS ON THE INDICATED ACCESSIBLE ROUTE HAVE BEEN REMOVED OR WILL BE REMOVED UNDER THIS PROJECT.
5. ACCESSIBLE ROUTE COMPLIANCE VERIFICATION. THE CONTRACTOR SHALL CONDUCT A TOPOGRAPHIC SURVEY BY A CALIFORNIA LICENSED SURVEYOR AND A LEVELNESS CHECK BY A CERTIFIED ACCESS SPECIALIST DOCUMENTING THE SLOPES ALONG THE ACCESSIBLE ROUTE TO VERIFY COMPLIANCE WITH SLOPES INDICATED ON THE PLANS AND PROVIDE AN AS–BUILT DRAWING SHOWING THE CONSTRUCTED SLOPES. IF DURING AN INSPECTION OR ENGINEERING REVIEW, THERE ARE SLOPES THAT ARE FOUND NOT COMPLIANT WITH THESE PLANS OR CBC, THE CONTRACTOR SHALL CORRECT AREAS AS STATED ABOVE. FOR ADDITIONAL INFORMATION SEE SPECIFICATION SECTION 32 13 15, CONCRETE PAVING FOR ACCESSIBLE ROUTES.
6. LEVEL LANDINGS, RAMPS AND WALKWAYS AS INDICATED ON THESE PLANS ARE PART OF THE ACCESSIBLE ROUTE AND SHALL NOT EXCEED 1.5% SLOPE IN ANY DIRECTION UNLESS NOTED DIFFERENTLY IN THESE PLANS.
7. THE CONTRACTOR SHALL NOTIFY THE STATE OF CONCERNS FOR ACCESS COMPLIANCE, PAVEMENT SLOPES OR INADEQUATE DRAINAGE PRIOR TO COMPLETING WORK.

IDENTIFICATION STAMP
DIV. OF THE STATE ARCHITECT
APP: 03-121324 INC:
REVIEWED FOR
SS ☐ FLS ☐ ACS ☑
DATE: 09/14/2022

OFFICE OF THE STATE FIRE MARSHAL
APPROVED FIRE AND PANIC ONLY
09/07/22
21-0233
Approval of this plan does not authorize or approve any omission or deviation from applicable regulations. Final approval is subject to field inspection. One set of approved plans shall be available on the project site at all times.

DGS GENERAL SERVICES
Department of General Services
Architecture & Engineering Sections
State of California
Real Estate Services Division
Project Management & Development Branch
707 Third Street, Suite 4-105
West Sacramento, California 95605

REGISTERED PROFESSIONAL ENGINEER
Scott C. McDonell
No. C-62154
CIVIL
STATE OF CALIFORNIA
1/21/22

DMV
State of California
Department of Motor Vehicles

Issue		
No.	Date	Description
1	9/2/22	

Project
SANTA MARIA FIELD OFFICE REPLACEMENT
2770 SANTA MARIA WAY
SANTA MARIA, CA 93455
SANTA BARBARA COUNTY
DEPT OF MOTOR VEHICLES

Supervisor	Designed	Drawn
E. VELAGIC	S. MCDONELL	S. MCDONELL

DSA App No.	SFM Permit No.
03-121324	21-S-0233-CP-ER

Sheet Title
CIVIL GENERAL NOTES

Project Number
DGS000000140725

Reference North | Sheet Scale: NO SCALE | Sheet Number: C001

Copyright © 2022, California Department of General Services • Real Estate Services Division

CAD File: X:\Projects\14xxxx\140725\DWG\PLTC001 CIVIL SITE GENERAL NOTES.dwg Plot Date: Jan 21, 2022 - 7:27pm Plotted by: SMcDonell

RELATIVE BORDER SCALE IN INCHES 0 1 2 3

LOCAL FIRE MARSHAL APPROVAL

NOTES:

1. LOCAL ACCESS APPROVAL PROVIDED HERE FOR STATE FIRE MARSHAL REVIEW ONLY. SFM HAS AUTHORITY OVER THIS PROJECT AND WILL CONDUCT REGULAR INSPECTIONS DURING CONSTRUCTION.

2. THE CONTRACTOR SHALL CONDUCT AN EMERGENCY RESPONDER RADIO COVERAGE (ERRC) TEST IN COORDINATION WITH THE CITY OF SANTA MARIA FIRE MARSHAL'S OFFICE TO CONFIRM THERE ARE NO ERRC COVERAGE CONCERNS WITH THE COMPLETED DMV BUILDING PRIOR TO OCCUPANCY.

STATE OF CALIFORNIA –NATIONAL RESOURCES AGENCY — Gavin Newsom, Governor

DEPARTMENT OF FORESTRY AND FIRE PROTECTION
OFFICE OF THE STATE FIRE MARSHAL
Fire and Life Safety Division
P.O. Box 944246
SACRAMENTO, CA 94244-2460
(916) 445-8550
Website: www.fire.ca.gov

LOCAL FIRE AUTHORITY – ACCESS APPROVAL

Project: Santa Maria DMV Field Office Replacement

Address: 2850 Santa Maria Way

CSFM File Number: _____ (Only if applicable) DGS Project #: DGS000000140725 (Only if applicable)

Pursuant to Title 19, California Code of Regulations, Article 3, Section 3.05, Fire Department Access and Egress, it is necessary to provide the California State Fire Marshal with written certification from the local fire authority that the above section is being met to their satisfaction.

Please return this form with all sections filled in completely. Without this form, California State Fire Marshal approval may be delayed. If you have any questions, please contact the California State Fire Marshal Plan Review Unit at (916) 445-8550.

The local fire authority shall consider the following items,

Approved	Yes	No
Fire Department Access	X	
Fire Department Connection	X	
Fire Hydrant	X	
Fire Alarm Annunciator	X	
Fire Alarm Control Panel	X	
Knox Box	X	
Emergency Responder Radio Coverage	X	

Local Fire Authority: City of Santa Maria
Address: 110 S. Pine Street
City/State/ZIP: Santa Maria, CA 93454

Approval issued by: Darrell Delgado
Rank/Title: Fire Marshal
Phone Number: 805-925-0951, extension 1578
Signature: Darrell Delgado Date: 04242020

HYDRANT FLOW REQUEST FORM

Santa Maria Fire Department
314 W. Cook Street, Room 8
Santa Maria, CA 93458-5557
(805) 925-0951 Ext. 2255 FAX # (805) 928-4746

Please complete the below information in blue or black ink. Submit form and fee (call (805) 925-0951 ext. 2255 for the current fee). Please make check or money order payable to City of Santa Maria. Our physical and mailing address is listed above.

Date Requested: 10-7-21 Date Required: 10-18-21

Name of Company Requesting Hydrant Flow: Matherly Fire Protection Inc

Contact Name: Bryan Matherly

Contact Mailing Address: 2336 N Peppertree St, Visalia CA 93291

Phone Number: 805-286-0077

Reason for Requesting Hydrant Flow: ☑ New Construction ☑ Tenant Improvement
☐ Insurance ☐ Other – Please State: _____

Address and Location of Hydrant: 2850 Santa Maria Way Sta Maria
(For example: 314 W. Cook Street, hydrant located at north east corner of property)

Send Hydrant Flow Information: ☐ By Mail ☐ By Fax: _____ (Fax Number)

☑ By E-mail: m6fire@gmail.com (E-mail Address)

Requestor's Signature: Bryan Matherly Date:

HYDRANT FLOW INFORMATION

TO BE COMPLETED BY FIRE DEPARTMENT

Date: 10-18-2021 Completed By: Jim Austria

Location: 800 BLOCK OF SUNRISE DR.

Static: 90 Residual: 87 Pitot: 25

Gallons Per Minute: 836 Outlet Diameter: 2.5"

TO BE COMPLETED BY FIRE DEPARTMENT

Date Hydrant Flow Fee Paid: _____ Accepted By: _____

Date Hydrant Flow Information Sent: _____

☐ By Fax ☐ By Mail ☒ By E-mail ☐ Other: _____

Sent By: _____

S:\Fire Department\Admin\Office Working File\FD Forms\Hydrant Flow Request Form.doc Rev. 8/3/16

STATE FIRE MARSHAL NOTES

Office of the State Fire Marshal
Underground Piping — Page 1of 2

UNDERGROUND PIPING FOR PRIVATE FIRE SERVICE MAINS, HYDRANTS, FIRE SPRINKLERS AND FIRE STANDPIPES

1. Prior to installation, all plans and specifications shall be approved by the Office of the State Fire Marshal.
2. Inspections are required: 1) prior to pouring thrust blocks, 2) of thrust blocks and joints 3) hydrostatic testing, and 4) for flush. Schedule all inspections 72 hours in advance. Call the local Deputy State Fire Marshal for inspection scheduling.
3. Installation, inspection, and testing shall conform to 2013 NFPA 13 and 2013 NFPA 24.
4. Geotechnical engineering report to compliment thrust block design must be listed on plans.
5. Private fire hydrants shall be approved type and have not less than a 6 inch diameter connection with the mains. All outlets shall be provided with National Standard Threads (NST).
6. A valve shall be installed in the hydrant connections; all valves shall be installed within 20 feet of the hydrant.
7. Fire hydrants shall be located not less than 40 feet from the buildings to be protected. A keyed gate valve shall be provided for each hydrant in an accessible location. Valves shall not be located in parking stalls.
8. Hydrants shall be protected if subject to mechanical damage. The means of protection shall be arranged in a manner that does not interfere with connection to or operation of hydrants.
9. Piping shall be listed for fire protection service or shall comply with the standards in 2013 NFPA 24 table 10.1.1
10. All buried fittings shall be of an approved type with joints and pressure class ratings compatible with the pipe used.
11. All bolts used for underground connections shall be stainless steel. All corrosion protection shall be in place.
12. All bolted joint accessories shall be cleaned and thoroughly coated with asphalt or other corrosion-retarding material after installation.
13. The depth of cover over water pipes shall be determined by the maximum depth of frost penetration in the locality where the pipe is laid; top of the pipe shall be buried not less than 1ft. below the frost line for the facility.
14. In those locations where frost is not a factor, the depth of cover shall not be less than 2 ½ ft. to prevent mechanical damage. When surface loads are expected, a minimum of 3 ft. cover shall be provided.
15. All tees, plugs, caps bends, reducers, valves and hydrant branches shall be restrained gainst movement in accordance with 2013 NFPA 24 §10.8.2 or §10.8.3
16. Thrust blocks, or other approved method of thrust restraint, shall be provided wherever pipe changes direction.
17. The trench shall be excavated for thrust blocks and inspected *prior* to pour. Thrust blocks shall be placed between undisturbed earth and the fitting to be restrained and shall be capable of resisting the calculated thrust force.
18. Thrust blocks shall be placed so that the joints are accessible for repair.
19. A hydrostatic test (200 psi for two hours or 50 psi over maximum static pressure, whichever is greater) shall be witnessed by a Deputy State Fire Marshal. The trench shall be back-filled between the joints to prevent movement of the pipe.
20. The system shall be thoroughly flushed before connection is made to overhead piping. Flow shall be through a minimum of a 4" hose or pipe unless otherwise approved by the Deputy State Fire Marshal. A Deputy State Fire Marshal shall witness the flush.
21. Control valves shall be supervised by one of the 4 acceptable methods listed in 2014 NFPA 24 §6.7.2

Office of the State Fire Marshal

NOTES FOR THRUST BLOCK RESTRAINTS
PLACE THE FOLLOWING NOTES, VERBATIM, ON THE PLAN:

CONDITION I

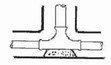

CONDITION II

CONDITION III

CONDITION IV

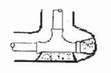

CONDITION V

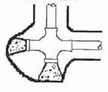

CONDITION VI

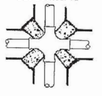

CONDITION VII

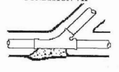

CONDITION VIII

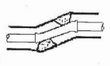

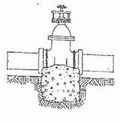

NOTE:

1. THE CONTRACTOR SHALL REVIEW THE STATE'S GEOTECHNICAL REPORT DATED DECEMBER 20, 2017 (UPDATED 5/19/20). SOILS FOUNDATION DESIGN BEARING CAPACITY FOUND IN REPORT – 3,000 PSF.

(11/2014)

IDENTIFICATION STAMP
DIV. OF THE STATE ARCHITECT
APP: 03-121324 INC:
REVIEWED FOR
SS ☐ FLS ☐ ACS ☑
DATE: 09/14/2022

OFFICE OF THE STATE FIRE MARSHAL
APPROVED FIRE AND PANIC ONLY
09/07/22
21-0233
Approval of this plan does not authorize or approve any omission or deviation from applicable regulations. Final approval is subject to field inspection. One set of approved plans shall be available on the project site at all times.

DGS GENERAL SERVICES
Architecture & Engineering Sections
State of California
Real Estate Services Division
Project Management & Development Branch
707 Third Street, Suite 4-105
West Sacramento, California 95605

REGISTERED PROFESSIONAL ENGINEER
Scott C. McDonell
CIVIL
STATE OF CALIFORNIA
1/21/22

DMV
State of California
Department of Motor Vehicles

Issue		
No.	Date	Description
1	9/2/22	

Project
SANTA MARIA FIELD OFFICE REPLACEMENT
2770 SANTA MARIA WAY
SANTA MARIA, CA 93455
SANTA BARBARA COUNTY

DEPT OF MOTOR VEHICLES

Supervisor	Designed	Drawn
E. VELAGIC	S. MCDONELL	S. MCDONELL

DSA App No. 03-121324 | SFM Permit No.

Sheet Title
CIVIL SITE STATE FIRE MARSHAL NOTES

Project Number

Reference North | Sheet Scale NO SCALE | Sheet Number C002

Copyright © 2022, California Department of General Services - Real Estate Services Division

CAD File: X:\Projects\14xxxx\140725\DWG\PLTC\002 CIVIL SITE STATE FIRE MARSHAL NOTES.dwg Plot Date: Jan 21, 2022 - 7:31pm (Plotted by: SMcDonel

RELATIVE BORDER SCALE IN INCHES 0 1 2 3

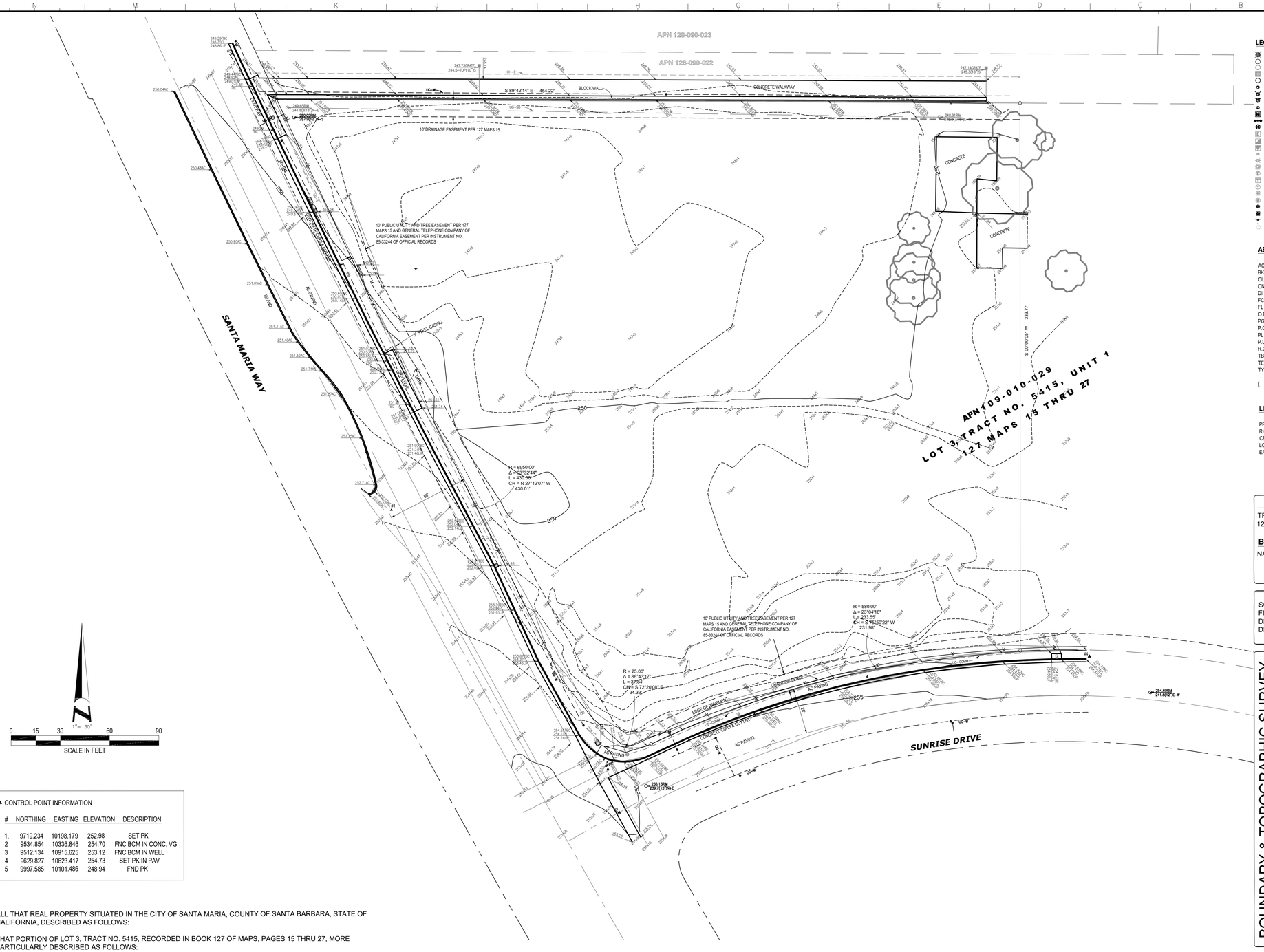

▲ CONTROL POINT INFORMATION

#	NORTHING	EASTING	ELEVATION	DESCRIPTION
1,	9719.234	10198.179	252.98	SET PK
2	9534.854	10336.846	254.70	FNC BCM IN CONC. VG
3	9512.134	10915.625	253.12	FNC BCM IN WELL
4	9629.827	10623.417	254.73	SET PK IN PAV
5	9997.585	10101.486	248.94	FND PK

ALL THAT REAL PROPERTY SITUATED IN THE CITY OF SANTA MARIA, COUNTY OF SANTA BARBARA, STATE OF CALIFORNIA, DESCRIBED AS FOLLOWS:

THAT PORTION OF LOT 3, TRACT NO. 5415, RECORDED IN BOOK 127 OF MAPS, PAGES 15 THRU 27, MORE PARTICULARLY DESCRIBED AS FOLLOWS:

BEGINNING AT THE NORTHWESTERLY CORNER OF SAID LOT 3, THENCE ALONG THE NORTHERLY LINE OF SAID LOT 3 SOUTH 89°42'14" EAST 454.22 FEET; THENCE LEAVING SAID NORTHERLY LINE SOUTH 00°00'05" WEST 333.77 FEET TO A POINT ON THE SOUTHERLY LINE OF SAID LOT 3; THENCE ALONG SAID SOUTHERLY LINE 233.55 FEET ALONG A CURVE TO THE LEFT CONCAVE SOUTHERLY HAVING A RADIUS OF 580.00 FEET, A CENTRAL ANGLE OF 23°04'18" AND A CHORD BEARING SOUTH 75°50'22" WEST 231.98 FEET; THENCE ALONG SAID SOUTHERLY LINE 37.84 FEET ALONG A CURVE TO THE RIGHT CONCAVE NORTHERLY HAVING A RADIUS OF 25.00 FEET, A CENTRAL ANGLE OF 86°43'17" AND A CHORD BEARING NORTH 72°20'08" WEST 34.33 FEET; THENCE ALONG THE WESTERLY LINE OF SAID LOT 3 430.08 FEET ALONG A CURVE TO THE RIGHT CONCAVE EASTERLY HAVING A RADIUS OF 6950.00 FEET, A CENTRAL ANGLE OF 03°32'44" AND A CHORD BEARING NORTH 27°12'07" WEST 430.01 FEET TO THE POINT OF BEGINNING.

CONTAINING 3.007 ACRES, MORE OR LESS

LEGEND

- ....FOUND MONUMENT
- ....DIMENSION POINT-NOTHING FOUND OR SET
- ....DRAIN MANHOLE
- ....DRAIN INLET
- ....SEWER MANHOLE
- ....SEWER CLEAN OUT
- ....FIRE HYDRANT
- ....FIRE DEPARTMENT CONNECTION
- ....WATER VALVE
- ....WATER BOX OR METER
- ....WATER VALVE ASSEMBLY
- ....WATER MANHOLE
- ....ELECTRIC BOX OR VAULT
- ....PULL BOX
- ....TRANSFORMER
- ....UTILITY POLE
- ....LIGHT
- ....TRAFFIC SIGNAL
- ....ELECTRIC MANHOLE
- ....TELEPHONE BOX
- ....TELEPHONE MANHOLE
- ....TELEVISION BOX
- ....TELEVISION MANHOLE
- ....GAS VALVE
- ....GAS METER
- ....SIGN
- ....HANDICAP PARKING OR RAMP

ABBREVIATIONS

AC	ASPHALTIC CONCRETE
BK	BOOK
CL	CENTERLINE
CN	CONCRETE
DI	DRAIN INLET
FC	FACE OF CURB
FL	FLOWLINE
O.R.	OFFICIAL RECORDS
PG	PAGE
P.O.B.	POINT OF BEGINNING
PL	PROPERTY LINE
P.U.E.	PUBLIC UTILITY EASEMENT
R.O.W.	RIGHT OF WAY
TBC	TOP BACK OF CURB
TE	TRASH ENCLOSURE
TYP	TYPICAL

( )....RECORD PER LEGAL DESCRIPTION

LINETYPES

PROPERTY LINE
RIGHT-OF-WAY
CENTERLINE
LOT LINE
EASEMENT

TRACT NO. 5415, UNIT 1
127 MAPS 15 THRU 27

BENCHMARK:
NAVD 88 FROM GPS OBSERVATIONS

SCALE: 1" = 20'
FIELD BOOK:
DRAWING NO. : 1300-092
DRAWN BY: A. Zarfos

BOUNDARY & TOPOGRAPHIC SURVEY

PROJECT
2770 Santa Maria Way
City of Santa Maria County of Santa Barbara California

Morrow Surveying
LAND SURVEYORS
1255 Starboard Drive
West Sacramento ~ CA ~ 95691
Phone: 916-372-8124
Fax: 916-372-8538
Email: adamz@morrowsurveying.com
www.morrowsurveying.com

IDENTIFICATION STAMP
DIV. OF THE STATE ARCHITECT
APP: 03-121324 INC: A
REVIEWED FOR
SS ☐ FLS ☐ ACS ☑
DATE: 09/14/2022

OFFICE OF THE STATE FIRE MARSHAL
APPROVED FIRE AND PANIC ONLY
09/07/22
21-0233
Approval of this plan does not authorize or approve any omission or deviation from applicable regulations. Final approval is subject to field inspection. One set of approved plans shall be available on the project site at all times.

DGS GENERAL SERVICES
Architecture & Engineering Sections
State of California
Real Estate Services Division
Project Management & Development Branch
707 Third Street, Suite 4-105
West Sacramento, California 95605

REGISTERED PROFESSIONAL ENGINEER
Scott C. McDonell
CIVIL
STATE OF CALIFORNIA
1/21/22

DMV
State of California
Department of Motor Vehicles

Issue		
No.	Date	Description
1	9/2/22	

Project
SANTA MARIA FIELD OFFICE REPLACEMENT
2770 SANTA MARIA WAY
SANTA MARIA, CA 93455
SANTA BARBARA COUNTY

DEPT OF MOTOR VEHICLES

Supervisor	Designed	Drawn
E.VELAGIC	S.MCDONELL	

DSA App No. 03-121324 | SFM Permit No.

Sheet Title
CIVIL
EXISTING CONDITIONS

Project Number

Reference North | Sheet Scale 1"=30' | Sheet Number C011

Copyright© 2022, California Department of General Services - Real Estate Services Division

RELATIVE BORDER SCALE IN INCHES 0 1 2 3

CAD File: X:\Projects\14xxxx\140725\DWG\PLTC011.dwg Plot Date: Jan 21, 2022 - 7:35pm Plotted by: SMcDonel

CITY DEMOLITION PLAN KEY NOTES

1. SAW CUT, REMOVE AND DISPOSE ASPHALT CONCRETE PAVING AND BASE MATERIAL
2. SAW CUT, REMOVE AND DISPOSE CONCRETE DRIVEWAY/WALKWAY AND BASE MATERIAL
3. SAW CUT, REMOVE AND DISPOSE CONCRETE PAVING, CURB, AND BASE MATERIAL
4. PROTECT (E) CMU WALL – DO NOT DISTURB.
5. REMOVE AND DISPOSE CHAINLINK FENCING, POSTS AND FOOTINGS.
6. REMOVE AND DISPOSE CHAINLINK DRIVEWAY GATE, POSTS AND FOOTINGS
7. REMOVE AND DISPOSE CHAINLINK PEDESTRIAN GATE, POSTS AND FOOTINGS
8. PROTECT EXISTING UTILITIES
9. PROTECT (E) ROADWAY SIGNAGE – DO NOT DISTURB
10. UTILITY BOXES TO BE ADJUSTED TO GRADE
11. REMOVE AND RELOCATE (E) LOW-VOLTAGE POWER POLE, GUY WIRES AND LINES OUTSIDE OF NEW DRIVEWAY AND ACCORDING TO COMM COMPANY'S REQUIREMENTS. CONTRACTOR TO OBTAIN APPROVAL AND PAY FEES.
12. REMOVE AND RELOCATE (E) LIGHT POLE PER CITY REQUIREMENTS. CONTRACTOR TO OBTAIN APPROVAL AN PAY FEES
13. PROTECT (E) FIRE HYDRANT – DO NOT DISTURB
14. PROTECT (E) STREETLIGHT/TRAFFIC SIGNAL POLE AND ELECTRICAL CABINET – DO NOT DISTURB
15. PROTECT (E) CURB AND GUTTER
16. PROTECT (E) ROADWAY IMPROVEMENTS
17. SAW CUT, REMOVE AND DISPOSE CONCRETE PAD, FOOTINGS AND BASE MATERIAL.
18. REMOVE AND DISPOSE CONCRETE STEPS AND FOUNDATION.
19. PROTECT EXISTING CULVERT HEADWALL. REMOVE DEBRIS TO EXPOSE FULL CULVERT OPENING. FLUSH DRAIN IN COORDINATION WITH SANTA MARIA CITY PUBLIC WORKS DEPARTMENT.
20. REMOVE TREE AND GRIND TRUNK BELOW (N) OR (E) GRADE (18" MIN.) AND DISPOSE. REMOVE TRUNK AND ROOTS ENTIRELY WHERE BELOW NEW ROADWAY OR STRUCTURES.
21. NOT USED
22. REMOVE AND DISPOSE SIGN, 8" STEEL POLE AND FOOTING.
23. REMOVE AND DISPOSE 6" STEEL CASING..
24. REMOVE AND DISPOSE CHAINLINK FENCING, SLATS, POSTS AND FOOTINGS.
25. PROTECT (E) CLOSED OIL WELL – CONSTRUCT VENT CONE, SEE CIVIL SITE PLAN
26. PROTECT EXISTING UTILITIES

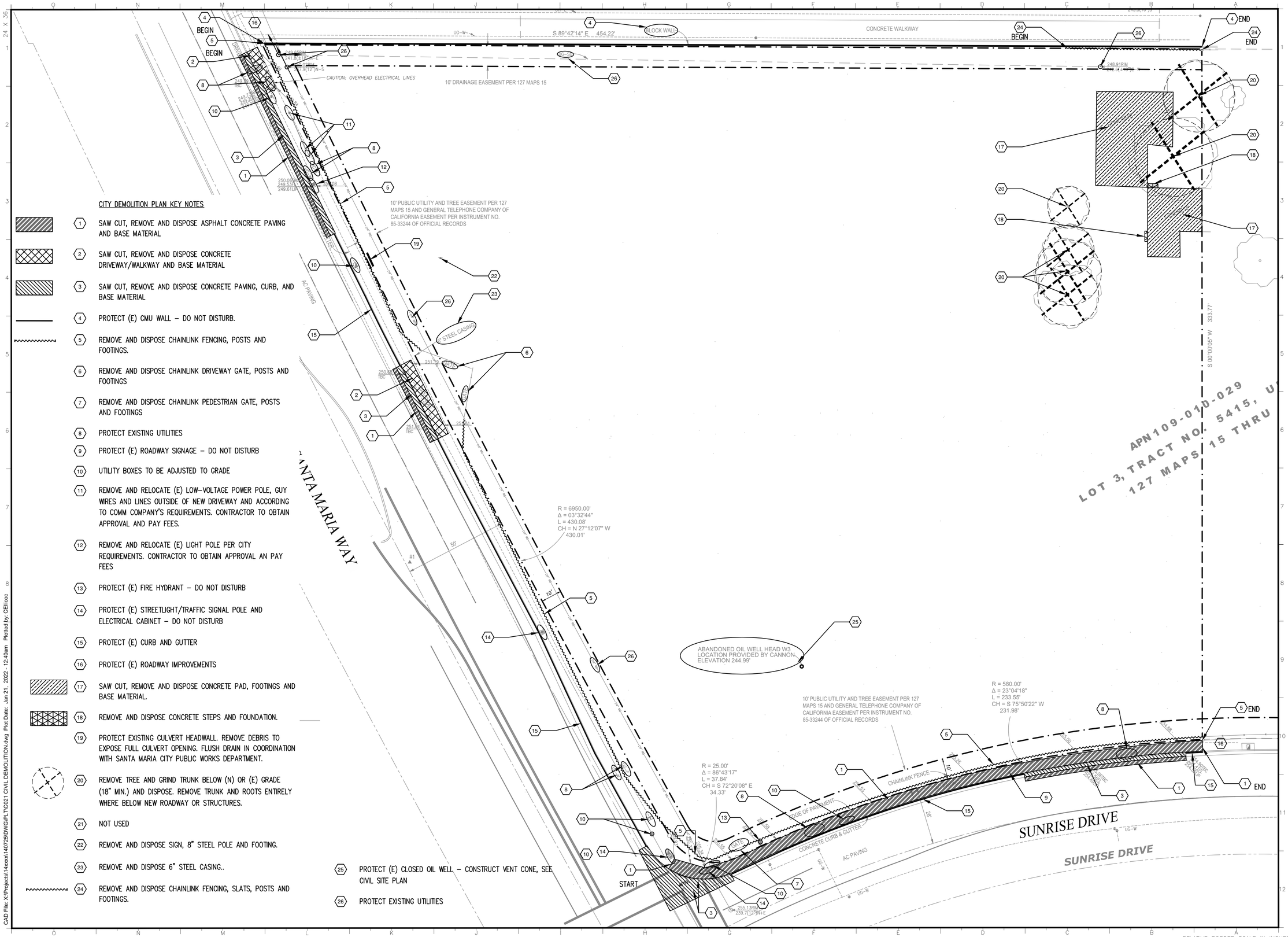

IDENTIFICATION STAMP
DIV. OF THE STATE ARCHITECT
APP: 03-121324 INC:
REVIEWED FOR
SS ☐ FLS ☐ ACS ☑
DATE: 09/14/2022

OFFICE OF THE STATE FIRE MARSHAL
APPROVED FIRE AND PANIC ONLY
09/07/22
21-0233
Approval of this plan does not authorize or approve any omission or deviation from applicable regulations. Final approval is subject to field inspection. One set of approved plans shall be available on the project site at all times.

DGS GENERAL SERVICES
Department of General Services
Architecture & Engineering Sections
State of California
Real Estate Services Division
Project Management & Development Branch
707 Third Street, Suite 4-105
West Sacramento, California 95605

REGISTERED PROFESSIONAL ENGINEER
JAMES DIGIORGIO
No. C-55479
Exp. 12/31/22
CIVIL
STATE OF CALIFORNIA
1/21/22

DMV
State of California
Department of Motor Vehicles

Issue		
No.	Date	Description
1	9/2/22	

Project
SANTA MARIA FIELD OFFICE REPLACEMENT
2770 SANTA MARIA WAY
SANTA MARIA, CA 93455
SANTA BARBARA COUNTY

DEPT OF MOTOR VEHICLES

Supervisor	Designed	Drawn
J.DIGIORGIO	C.ELLICOCK	C.ELLICOCK

DSA App No.	SFM Permit No.
03-121324	21-S-0233-CP-ER

Sheet Title
CIVIL DEMOLITION PLAN

Project Number
DGS000000140725

Reference North

Sheet Scale
1"=20'

Sheet Number
C021

Copyright © 2022, California Department of General Services - Real Estate Services Division

CAD File: X:\Projects\140xxx\140725\DWG\PLT\C021 CIVIL DEMOLITION.dwg Plot Date: Jan 21, 2022 - 12:40am Plotted by: CEllicoc

RELATIVE BORDER SCALE IN INCHES 0 1 2 3

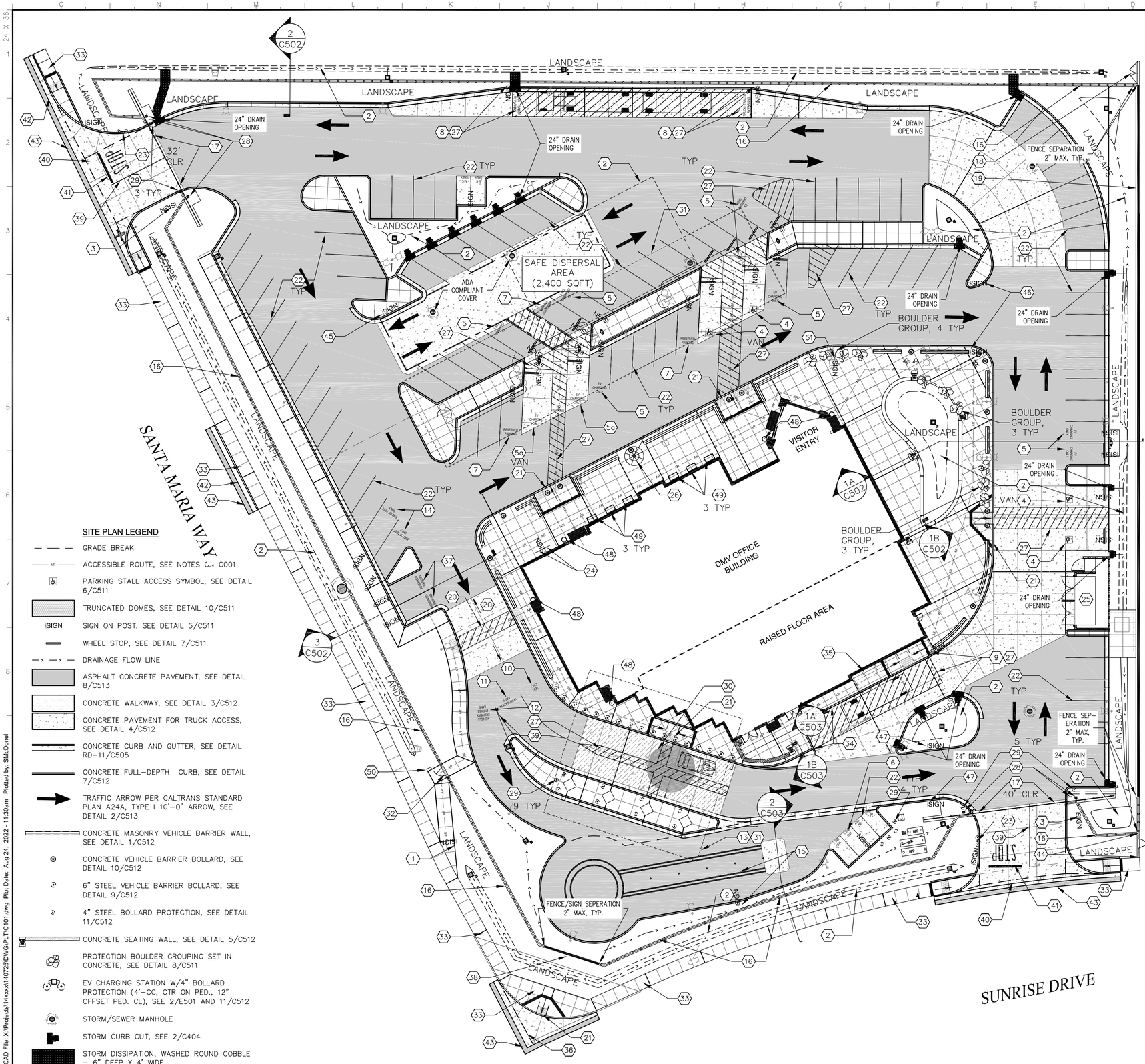

SITE PLAN LEGEND

- GRADE BREAK
- ACCESSIBLE ROUTE, SEE NOTES C.. C001
- PARKING STALL ACCESS SYMBOL, SEE DETAIL 6/C511
- TRUNCATED DOMES, SEE DETAIL 10/C511
- SIGN — SIGN ON POST, SEE DETAIL 5/C511
- WHEEL STOP, SEE DETAIL 7/C511
- DRAINAGE FLOW LINE
- ASPHALT CONCRETE PAVEMENT, SEE DETAIL 8/C513
- CONCRETE WALKWAY, SEE DETAIL 3/C512
- CONCRETE PAVEMENT FOR TRUCK ACCESS, SEE DETAIL 4/C512
- CONCRETE CURB AND GUTTER, SEE DETAIL RD-11/C505
- CONCRETE FULL-DEPTH CURB, SEE DETAIL 7/C512
- TRAFFIC ARROW PER CALTRANS STANDARD PLAN A24A, TYPE I 10'-0" ARROW, SEE DETAIL 2/C513
- CONCRETE MASONRY VEHICLE BARRIER WALL, SEE DETAIL 1/C512
- CONCRETE VEHICLE BARRIER BOLLARD, SEE DETAIL 10/C512
- 6" STEEL VEHICLE BARRIER BOLLARD, SEE DETAIL 9/C512
- 4" STEEL BOLLARD PROTECTION, SEE DETAIL 11/C512
- CONCRETE SEATING WALL, SEE DETAIL 5/C512
- PROTECTION BOULDER GROUPING SET IN CONCRETE, SEE DETAIL 8/C511
- EV CHARGING STATION W/4" BOLLARD PROTECTION (4'-CC, CTR ON PED., 12" OFFSET PED. CL), SEE 2/E501 AND 11/C512
- STORM/SEWER MANHOLE
- STORM CURB CUT, SEE 2/C404
- STORM DISSIPATION, WASHED ROUND COBBLE – 6" DEEP X 4' WIDE

SITE PLAN KEYNOTES

1. ACCESSIBLE ROUTE SIGNAGE, ARROW TOWARD DMV, SEE DETAIL 9/C511
2. STORM WATER BIO-SWALE & UNDERGROUND DETENTION/RETENTION SYSTEM, SEE SHEET C402
3. ACCESSIBILITY TOW AWAY AND DMV SIGNS, SEE DETAIL 3/C511 & 2M/C514
4. ACCESSIBILITY PARKING AREA W/MARKINGS AND SIGNAGE, SEE DETAIL 2/C511
5. EV STATION – SIGN, MARKINGS AND ELEC., SEE DETAIL 11/C511, 1/C514, & 2/E501. 5a – ADDITIONAL ISA & VAN SIGNS, SEE DETAIL 4, 5, & 6/C511
6. MOTORCYCLE PARKING AREA W/12" WHITE LETTERING AND SIGNAGE, SEE DETAIL 2E/C514
7. CLEAN AIR, CARPOOL AND EV PARKING AREA W/12" WHITE LETTERING AND SIGNAGE, SEE DETAIL 2G/C514
8. TRUCK/TRAILER/RV PARKING AREA W/12" WHITE LETTERING AND SIGNAGE FOR VERIFICATIONS, SEE DETAIL 2B/C514
9. DELIVERY TRUCK PARKING AREA W/12" WHITE LETTERING AND SIGNAGE, SEE DETAIL 2D/C514
10. DRIVE TEST LANE W/12" WHITE LETTERING, SEE ARCHITECTURAL PLAN FOR SIGNAGE ON CANOPY
11. VERIFICATION LANE W/12" WHITE LETTERING, SEE ARCHITECTURAL PLAN FOR SIGNAGE ON CANOPY
12. VEHICLE/DELIVERY BYPASS LANE W/12" WHITE LETTERING
13. CANOPY STRUCTURE W/14' MINIMUM CLEAR, SEE ARCHITECTURE SHEET A415.
14. END OF DRIVE TEST PARKING W/12" WHITE LETTERING AND SIGNAGE, SEE DETAIL 2F/C514
15. MOTORCYCLE SKILLS TESTING AREA W/SIGNAGE AND MARKINGS, SEE DETAIL 2C/C514 & 4/C513
16. 7' HIGH DECORATIVE STEEL FENCING W/CONCRETE MOW STRIP, SEE DETAIL 6/C513
17. 7' HIGH, DECORATIVE STEEL, MOTORIZED DOUBLE SLIDE GATE W/BOLLARD PROTECTION, SEE DETAIL 9/C513
18. 6' HIGH, 10' WIDE CALTRANS STD CHAINLINK DOUBLE SWING GATE FOR UTILITY EASEMENT, SEE DETAIL A85 & A85A/C506
19. 7' HIGH, CONCRETE MASONRY WALL/RETAINING WALL W/CONCRETE MOW STRIP, SEE DETAIL ON C501
20. CONCRETE TRAFFIC TABLE, SEE DETAIL 12/C512
21. REINFORCED CONCRETE CALTRANS STD (CASE A, C & F) CURB RAMP, SEE DETAIL A88A/C506
22. TYPICAL 4" WIDE WHITE PARKING STALL STRIPING
23. CITY KNOX BOX W/ENTRY KEY PAD AND BOLLARD PROTECTION, SEE ELECTRICAL SHEET E101 AND DETAIL 11/C512
24. BICYCLE RACK W/SIGNAGE, SEE DETAIL 4/C514 & 2I/C514
25. DOUBLE COMPARTMENT TRASH ENCLOSURE, SEE ARCHITECTURE SHEET A416
26. 35' FLAG POLE, SEE DETAIL 13/C512
27. DIAGONAL STRIPING NO PARKING AND CROSS-WALK DELINEATION, SEE DETAIL 2/C513
28. GATE CONTROLLER AND FIRE STROBE ACCESS, SEE SPECIFICATIONS AND ELECTRICAL SHEET E101
29. 4" BOLLARD PROTECTION, SEE DETAIL 11/C512
30. WELL CAP AND VAPOR PROTECTION, SEE SHEET C701
31. SOLAR ARRAY, SEE STRUCTURAL SHEET 16/S303
32. STREET ACCESS – PEDESTRIAN GATE, SEE DETAIL 5/C513
33. CITY STANDARD SIDEWALK, SEE DETAIL RD11/C505
34. 12" TALL CONCRETE CURB, SEE DETAIL 7/C512
35. DOUBLE BIKE LOCKER, SEE SPECIFICATIONS
36. PARTIAL CITY STANDARD CROSS GUTTER AND SPANDREL, W/CURB RAMP. PAINT TRAFFIC MARKINGS AFFECTED BY WORK, SEE DETAIL RD-18/C505
37. OFFICER PARKING W/12" WHITE LETTERING AND SIGNAGE, SEE DETAIL 2J/C514
38. MONUMENT SIGN, SEE ARCHITECTURE DETAIL 18/A508
39. PAINTED 4" WIDE WHITE LANE STRIPING
40. CITY STANDARD COMMERCIAL DRIVEWAY, SEE DETAIL RD-19A/C505
41. STOP AND LIMIT LINE W/SIGNAGE, SEE DETAIL 2&7/C513
42. CITY STANDARD CURB/GUTTER, SEE DETAIL RD-11/C505
43. CITY STANDARD PAVEMENT SECTION FOR PRIMARY ARTERIAL COMMERCIAL STREETS, SEE DETAIL RD-22A/C506
44. 6' HIGH CHAINLINK FENCE AND WALK GATE, CALTRANS STD – CONNECT DECORATIVE STEEL FENCE TO (E) CHAINLINK FENCE ON ADJACENT PROPERTY, SEE DETAIL A85 & A85A/C506
45. NO RIGHT TURN SIGN, SEE DETAIL 2L/C514
46. NO STRAIGHT THROUGH SIGN, SEE DETAIL 2K/C514
47. EXIT ONLY SIGN, SEE DETAIL 2A/C514
48. 40-GALLON TRASH RECEPTACLE, SEE DETAIL 3/C514
49. 48" CONTOUR BENCH, SEE DETAIL 3/C514
50. POSTMASTER APPROVED LOCKABLE BLACK MAIL PACKAGE DROP BOX ON IN-GROUND PEDESTAL (US4375 & US4385 BY USMAILSUPPLY.COM), OR APPROVED EQUAL.
51. APPOINTMENT AND UNAUTHORIZED SIGNS, SEE DETAIL 15/A508 & 12/A508

IDENTIFICATION STAMP
DIV. OF THE STATE ARCHITECT
APP: 03-121324 INC: A
REVIEWED FOR
SS ☐ FLS ☐ ACS ☑
DATE: 09/14/2022

OFFICE OF THE STATE FIRE MARSHAL
APPROVED FIRE AND PANIC ONLY
09/07/22
21-0233
Approval of this plan does not authorize or approve any omission or deviation from applicable regulations. Final approval is subject to field inspection. One set of approved plans shall be available on the project site at all times.

DGS GENERAL SERVICES

Department of General Services
Architecture & Engineering Sections
State of California
Real Estate Services Division
Project Management & Development Branch
707 Third Street, Suite 4-105
West Sacramento, California 95605

REGISTERED PROFESSIONAL ENGINEER
Scott C. McDonell
No. C-62154
CIVIL
STATE OF CALIFORNIA
8/24/22

State of California
Department of Motor Vehicles

Issue		
No.	Date	Description
1	9/2/22	

Project
SANTA MARIA FIELD OFFICE REPLACEMENT
2770 SANTA MARIA WAY
SANTA MARIA, CA 93455
SANTA BARBARA COUNTY

DEPT OF MOTOR VEHICLES

Supervisor	Designed	Drawn
E. VELAGIC	S. MCDONELL	S. MCDONELL

DSA App No.	SFM Permit No.
03-121324	21-S-0233-CP-ER

Sheet Title
CIVIL SITE PLAN

Project Number
DGS000000140725

Reference North

Sheet Scale
1" = 20'-0"

Sheet Number
C101

© Copyright 2022, California Department of General Services - Real Estate Services Division

CAD File: X:\Projects\14xxxx\140725\DWG\PLTC101.dwg Plot Date: Aug 24, 2022 - 11:30am Plotted by: SMcDonel

RELATIVE BORDER SCALE IN INCHES 0 1 2 3

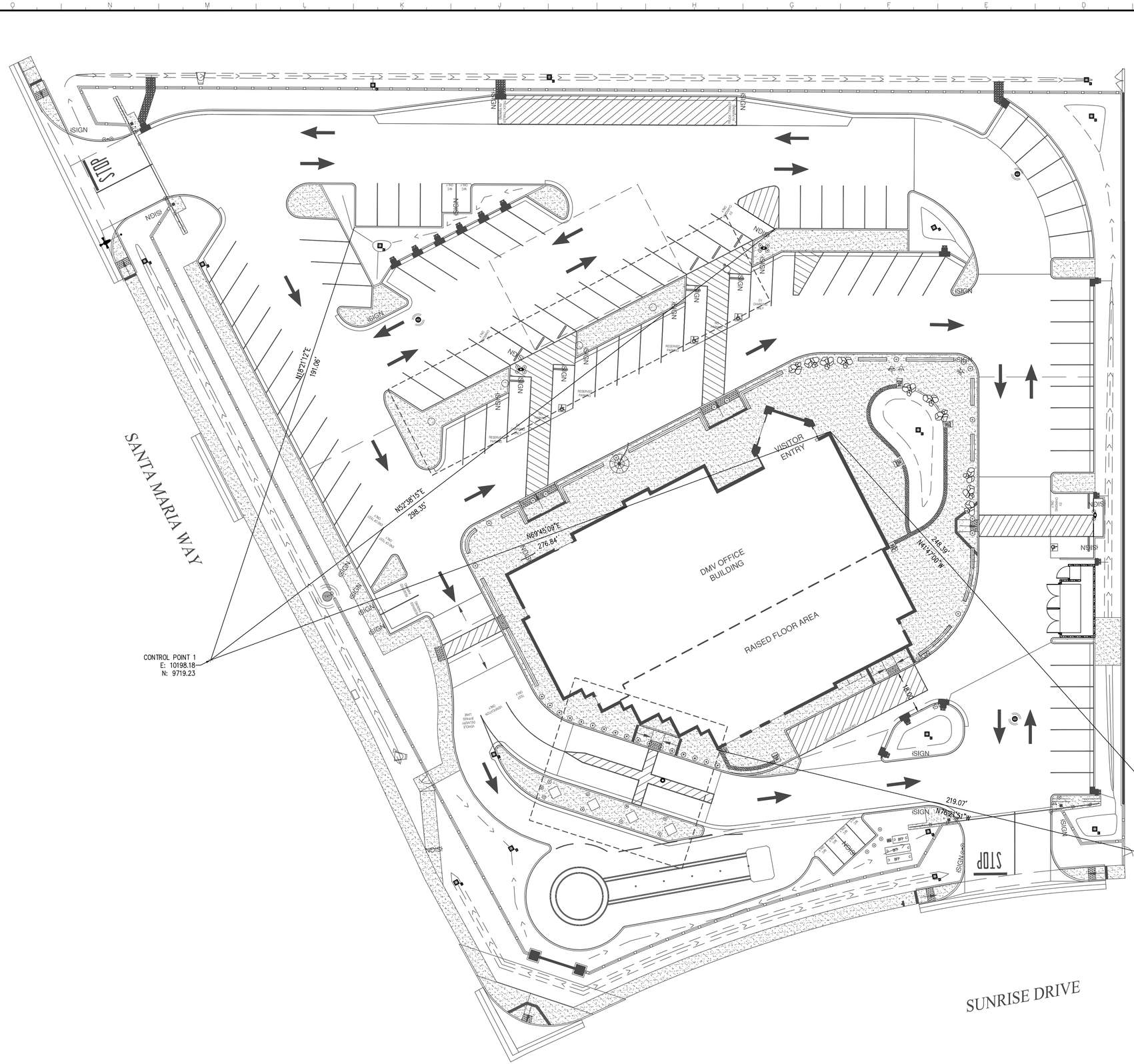

CONTROL POINT INFORMATION USED ON C201

#	NORTHING	EASTING	ELEVATION	DESCRIPTION
1.	9719.234	10198.179	252.98	SET PK
2.	9629.827	10623.417	254.73	SET PK IN PAV

GENERAL LAYOUT NOTES:

1. DIMENSIONS ARE TYPICALLY SHOWN TO FACE OF CURB. OUTSIDE EDGE, FACE OF WALL, CENTER OF STRIPE AND CENTER OF BOLLARD
2. CONTRACTOR SHALL COMPLETE ALL STAKING AND RE-STAKING AS REQUIRED TO COMPLETE THE PROJECT WORK
3. SEE SURVEY SHEET C011 FOR DESCRIPTION AND LOCATION OF CONTROL POINTS
4. SHEETS C201 THROUGH C202 ARE ACCURATE FOR SITE LAYOUT ONLY
5. FOR CLARITY NOT ALL SITE ELEMENTS ARE SHOWN
6. SEE SITE PLAN FOR CONCRETE CRACK CONTROL JOINTS

IDENTIFICATION STAMP
DIV. OF THE STATE ARCHITECT
APP: 03-121324 INC:
REVIEWED FOR
SS ☐ FLS ☐ ACS ☑
DATE: 09/14/2022

OFFICE OF THE STATE FIRE MARSHAL
APPROVED FIRE AND PANIC ONLY
09/07/22
21-0233
Approval of this plan does not authorize or approve any omission or deviation from applicable regulations. Final approval is subject to field inspection. One set of approved plans shall be available on the project site at all times.

DGS GENERAL SERVICES
Department of General Services
Architecture & Engineering Sections
State of California
Real Estate Services Division
Project Management & Development Branch
707 Third Street, Suite 4-105
West Sacramento, California 95605

REGISTERED PROFESSIONAL ENGINEER
JAMES DIGIORGIO
No. C-55479
Exp. 12/31/22
CIVIL
STATE OF CALIFORNIA
1/21/22

DMV
State of California
Department of Motor Vehicles

Issue

No.	Date	Description
1	9/2/22	

Project
SANTA MARIA FIELD OFFICE REPLACEMENT
2770 SANTA MARIA WAY
SANTA MARIA, CA 93455
SANTA BARBARA COUNTY

DEPT OF MOTOR VEHICLES

Supervisor	Designed	Drawn
J.DIGIORGIO	C.ELLICOCK	C.ELLICOCK

DSA App No.	SFM Permit No.
03-121324	21-S-0233-CP-ER

Sheet Title
CIVIL SITE CONTROL

Project Number
DGS000000140725

Reference North

Sheet Scale
1"=20'

Sheet Number
C201

Copyright © 2022, California Department of General Services - Real Estate Services Division

CAD File: X:\Projects\14xxxx\140725\DWG\PLTC201 CIVIL SITE CONTROL.dwg Plot Date: Jan 21, 2022 - 10:54am Plotted by: CEllicoc

RELATIVE BORDER SCALE IN INCHES 0 1 2 3

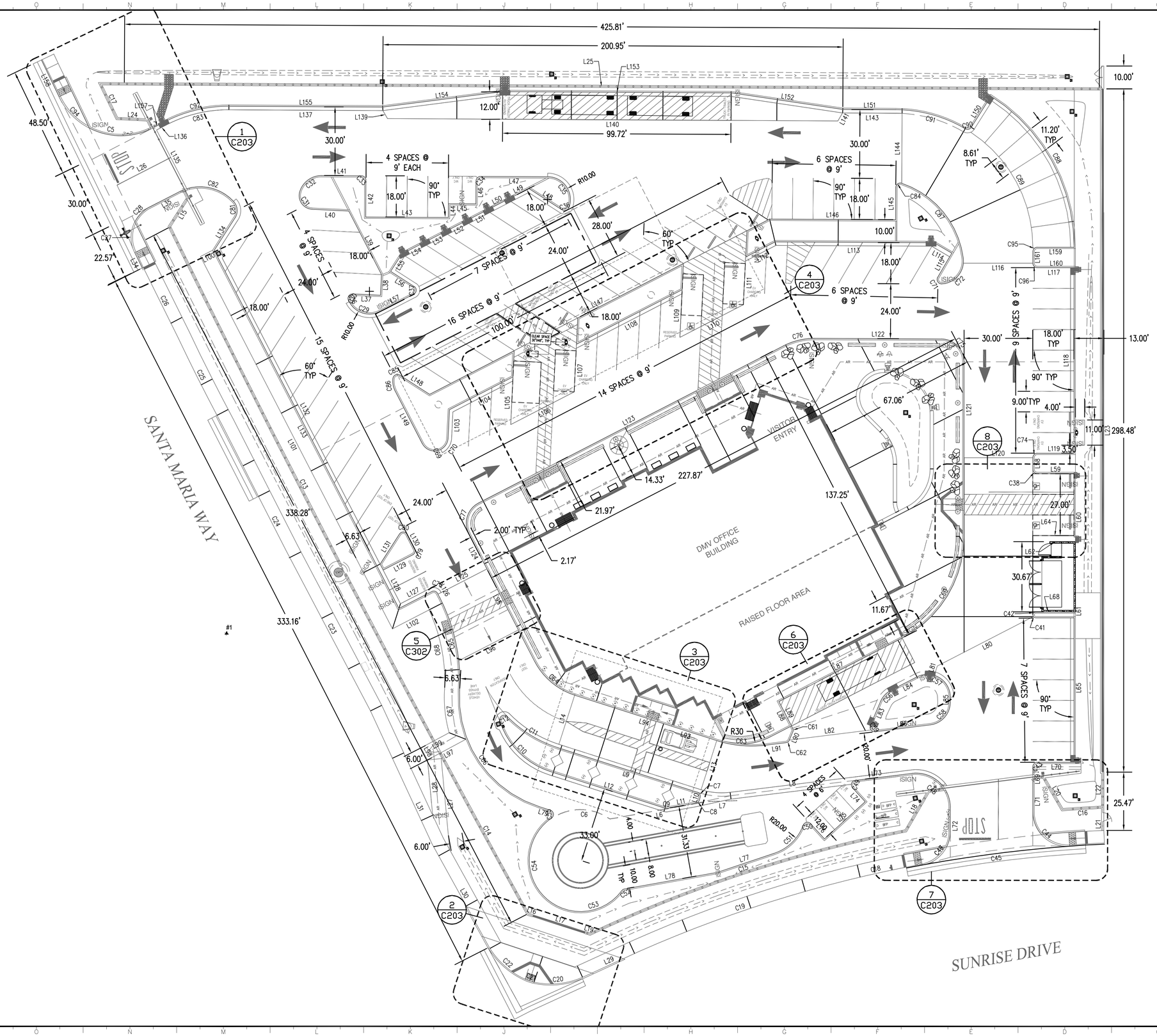

GENERAL LAYOUT NOTES:

1. DIMENSIONS ARE TYPICALLY SHOWN TO FACE OF CURB. OUTSIDE EDGE, FACE OF WALL, CENTER OF STRIPE AND CENTER OF BOLLARD
2. CONTRACTOR SHALL COMPLETE ALL STAKING AND RE-STAKING AS REQUIRED TO COMPLETE THE PROJECT WORK
3. SEE SURVEY SHEET C011 FOR DESCRIPTION AND LOCATION OF CONTROL POINTS
4. SHEETS C201 THROUGH C202 ARE ACCURATE FOR SITE LAYOUT ONLY
5. FOR CLARITY NOT ALL SITE ELEMENTS ARE SHOWN
6. SEE SITE PLAN FOR CONCRETE CRACK CONTROL JOINTS

IDENTIFICATION STAMP
DIV. OF THE STATE ARCHITECT
APP: 03-121324 INC:
REVIEWED FOR
SS ☐ FLS ☐ ACS ☑
DATE: 09/14/2022

OFFICE OF THE STATE FIRE MARSHAL
APPROVED FIRE AND PANIC ONLY
09/07/22
21-0233
Approval of this plan does not authorize or approve any omission or deviation from applicable regulations. Final approval is subject to field inspection. One set of approved plans shall be available on the project site at all times.

DGS GENERAL SERVICES

Department of General Services
Architecture & Engineering Sections
State of California
Real Estate Services Division
Project Management & Development Branch
707 Third Street, Suite 4-105
West Sacramento, California 95605

REGISTERED PROFESSIONAL ENGINEER
JAMES DIGIORGIO
No. C-55479
Exp. 12/31/22
CIVIL
STATE OF CALIFORNIA
8/25/22
10/15/21

DMV
State of California
Department of Motor Vehicles

Issue		
No.	Date	Description
1	9/2/22	

Project
SANTA MARIA FIELD OFFICE REPLACEMENT
2770 SANTA MARIA WAY
SANTA MARIA, CA 93455
SANTA BARBARA COUNTY

DEPT OF MOTOR VEHICLES

Supervisor	Designed	Drawn
J.DIGIORGIO	C.ELLICOCK	C.ELLICOCK

DSA App No.	SFM Permit No.
03-121324	21-S-0233-CP-ER

Sheet Title
CIVIL SITE LAYOUT

Project Number
DGS000000140725

Reference North

Sheet Scale
1"=20'

Sheet Number
C202

Copyright © 2022, California Department of General Services - Real Estate Services Division

CAD File: X:\Projects\114xxxx\140725\DWG\PLTC202 CIVIL SITE LAYOUT.dwg Plot Date: Aug 24, 2022 - 11:33am Plotted by: SMcDonel

RELATIVE BORDER SCALE IN INCHES 0 1 2 3

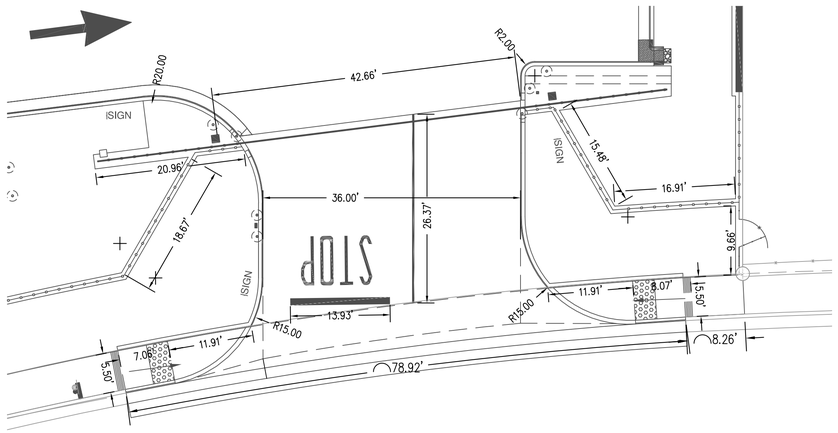

7 ENLARGED AREA
SCALE: 1" = 10'

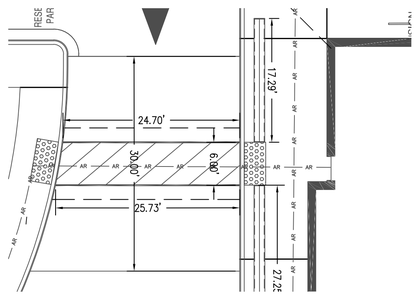

5 ENLARGED AREA
SCALE: 1" = 10'

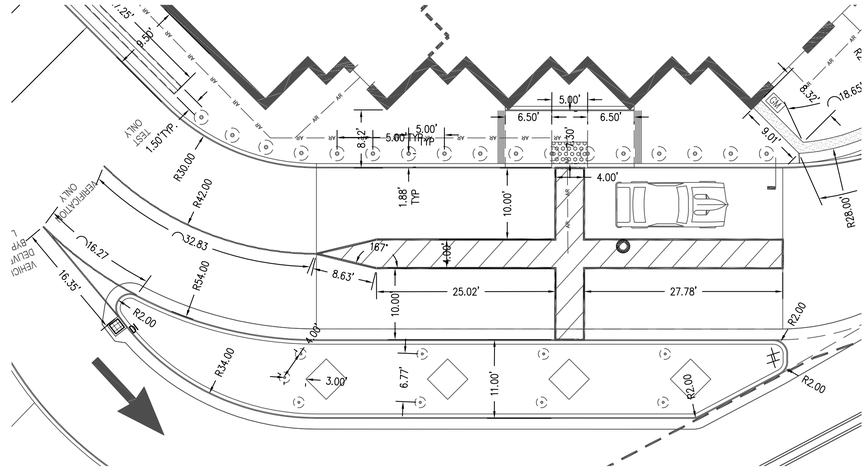

3 ENLARGED AREA
SCALE: 1" = 10'

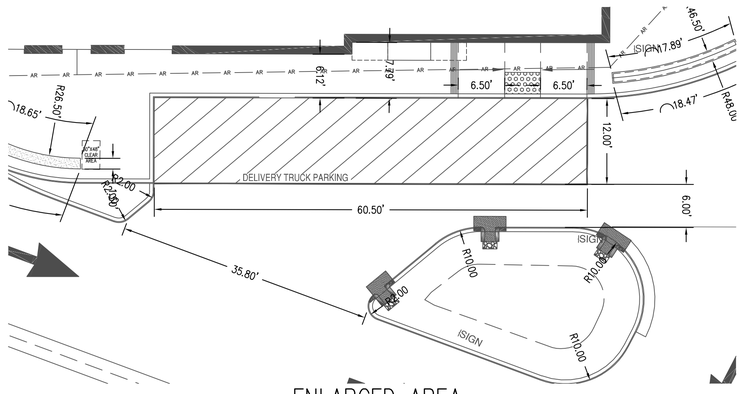

6 ENLARGED AREA
SCALE: 1" = 10'

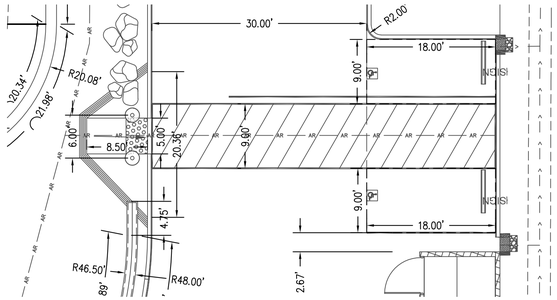

8 ENLARGED AREA
SCALE: 1" = 10'

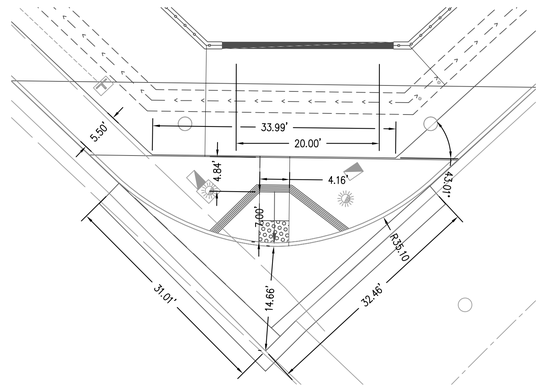

2 ENLARGED AREA
SCALE: 1" = 10'

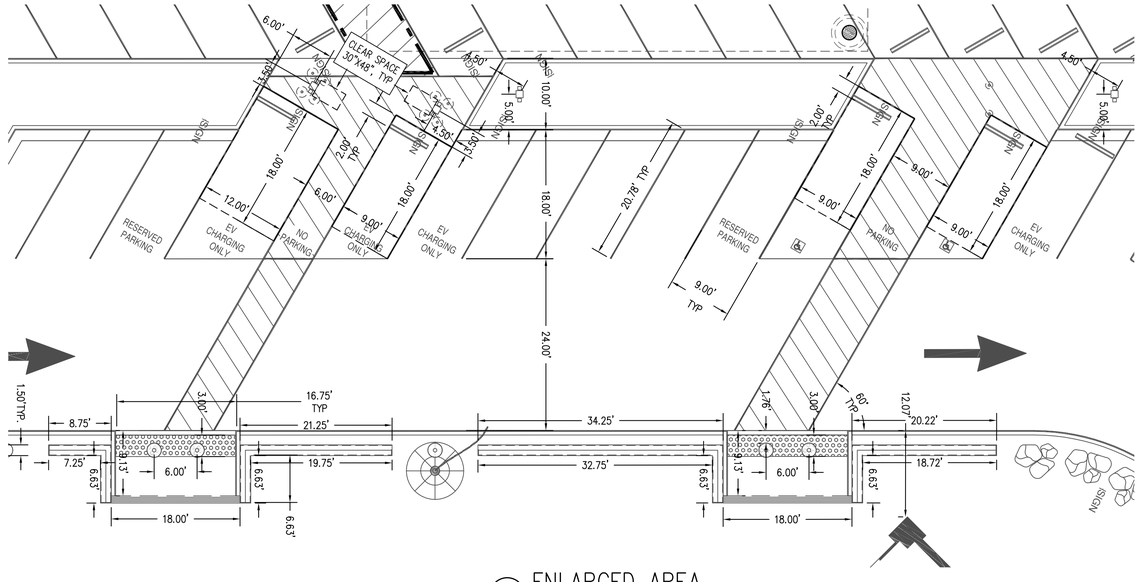

4 ENLARGED AREA
SCALE: 1" = 10'

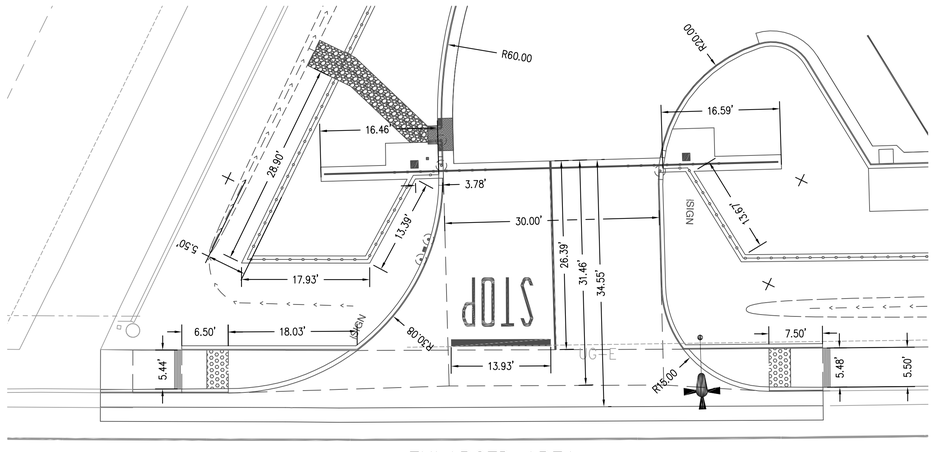

1 ENLARGED AREA
SCALE: 1" = 10'

10 0 10 20
SCALE OF FEET

IDENTIFICATION STAMP
DIV. OF THE STATE ARCHITECT
APP: 03-121324 INC:
REVIEWED FOR
SS ☐ FLS ☐ ACS ☑
DATE: 09/14/2022

OFFICE OF THE STATE FIRE MARSHAL
APPROVED FIRE AND PANIC ONLY
09/07/22
21-0233
Approval of this plan does not authorize or approve any omission or deviation from applicable regulations. Final approval is subject to field inspection. One set of approved plans shall be available on the project site at all times.

DGS GENERAL SERVICES

Department of General Services
Architecture & Engineering Sections
State of California
Real Estate Services Division
Project Management & Development Branch
707 Third Street, Suite 4-105
West Sacramento, California 95605

REGISTERED PROFESSIONAL ENGINEER
JAMES DIGIORGIO
No. C-55479
Exp. 12/31/22
CIVIL
STATE OF CALIFORNIA
8/25/22
10/15/21

DMV
State of California
Department of Motor Vehicles

Issue		
No.	Date	Description
1	9/2/22	

Project
SANTA MARIA FIELD OFFICE REPLACEMENT

2770 SANTA MARIA WAY
SANTA MARIA, CA 93455
SANTA BARBARA COUNTY

DEPT OF MOTOR VEHICLES

Supervisor	Designed	Drawn
J.DIGIORGIO	C.ELLICOCK	C.ELLICOCK

DSA App No.	SFM Permit No.
03-121324	21-S-0233-CP-ER

Sheet Title
CIVIL ENLARGED SITE LAYOUTS

Project Number
DGS000000140725

Reference North

Sheet Scale
AS NOTED

Sheet Number
C203

Copyright © 2022, California Department of General Services - Real Estate Services Division

CAD File: X:\Projects\14xxxx\140725\DWG\PLTC203.dwg Plot Date: Aug 24, 2022 - 11:19am Plotted by: SMcDonel

RELATIVE BORDER SCALE IN INCHES 0 1 2 3

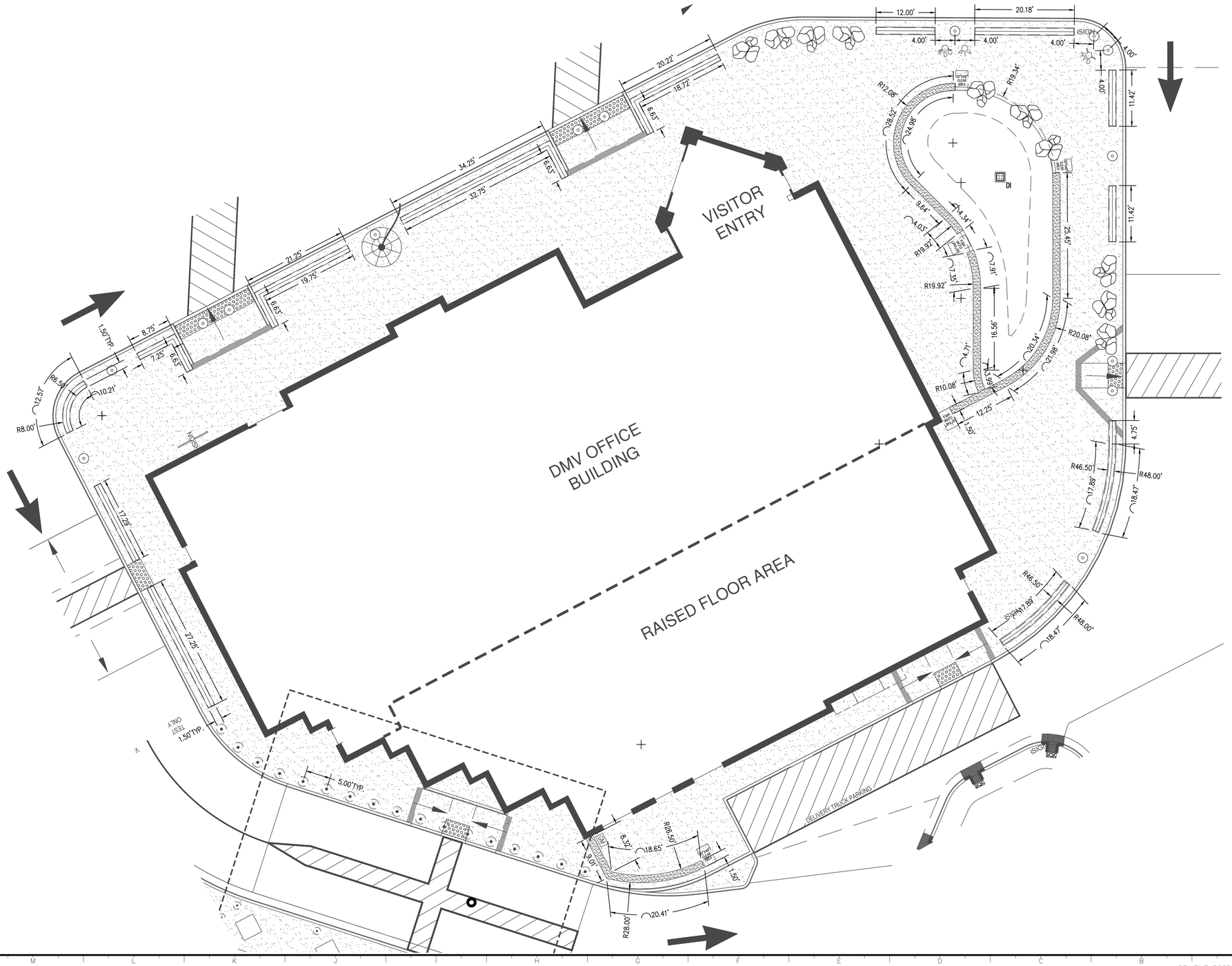

IDENTIFICATION STAMP
DIV. OF THE STATE ARCHITECT
APP: 03-121324 INC:
REVIEWED FOR
SS ☐ FLS ☐ ACS ☑
DATE: 09/14/2022

OFFICE OF THE STATE FIRE MARSHAL
APPROVED FIRE AND PANIC ONLY
09/07/22
21-0233
Approval of this plan does not authorize or approve any omission or deviation from applicable regulations. Final approval is subject to field inspection. One set of approved plans shall be available on the project site at all times.

DGS GENERAL SERVICES

Department of General Services
Architecture & Engineering Sections
State of California
Real Estate Services Division
Project Management & Development Branch
707 Third Street, Suite 4-105
West Sacramento, California 95605

REGISTERED PROFESSIONAL ENGINEER
JAMES DIGIORGIO
No. C-55479
Exp. 12/31/22
CIVIL
STATE OF CALIFORNIA
1/21/22

DMV
State of California
Department of Motor Vehicles

Issue

No.	Date	Description
1	9/2/22	

Project
SANTA MARIA FIELD OFFICE REPLACEMENT
2770 SANTA MARIA WAY
SANTA MARIA, CA 93455
SANTA BARBARA COUNTY

DEPT OF MOTOR VEHICLES

Supervisor	Designed	Drawn
J.DIGIORGIO	C.ELLICOCK	C.ELLICOCK

DSA App No.	SFM Permit No.
03-121324	21-S-0233-CP-ER

Sheet Title
CIVIL
ENLARGED SITE
LAYOUT

Project Number
DGS000000140725

Reference North

Sheet Scale
1" = 10'

Sheet Number
C204

Copyright © 2022, California Department of General Services - Real Estate Services Division

CAD File: X:\Projects\144xxxx\140725\DWG\PLTC204 CIVIL ENLARGED SITE LAYOUT.dwg Plot Date: Jan 21, 2022 - 12:46am Plotted by:CEllicoc

RELATIVE BORDER SCALE IN INCHES 0 1 2 3

LINE TABLE				
LINE NO.	LENGTH	DIRECTION	START NORTHING	START EASTING
L6	43.24'	S79°50'34"W	9645.80	10408.14
L7	13.05'	S88°11'58"W	9646.21	10421.18
L8	54.89'	N82°58'06"E	9648.36	10418.27
L9	63.85'	N72°16'27"W	9649.94	10403.67
L10	1.05'	N17°43'22"E	9646.43	10404.65
L11	12.73'	N79°50'34"E	9642.82	10390.57
L12	52.61'	S72°16'38"E	9658.90	10339.50
L13	22.50'	S17°43'33"W	9672.40	10412.24
L14	22.50'	N17°43'33"E	9670.80	10343.31
L15	15.17'	S32°43'33"W	9909.76	10181.39
L16	2.21'	S72°16'27"E	9596.58	10329.79
L17	16.00'	S72°16'27"E	9594.69	10335.71
L18	19.91'	N30°00'05"E	9633.02	10494.79
L19	2.23'	S72°16'27"E	9588.60	10354.76
L20	16.55'	S29°59'56"E	9656.59	10554.86
L21	2.46'	N00°00'00"E	9634.61	10580.79
L22	15.34'	N00°00'00"E	9643.34	10580.79
L23	298.41'	S00°00'05"W	9957.12	10580.80
L24	13.70'	S87°16'27"E	9944.21	10150.25
L25	437.83'	N89°42'09"W	9957.11	10580.80
L26	26.39'	N62°43'33"E	9915.09	10150.29
L27	39.98'	S05°19'52"E	9664.56	10291.89
L28	24.28'	S05°19'52"E	9664.00	10285.91
L29	27.20'	N65°23'32"E	9569.01	10353.63
L30	51.54'	S28°53'51"E	9627.30	10287.91
L31	34.23'	S24°53'31"E	9658.35	10273.51
L34	8.50'	N26°13'46"W	9878.01	10161.75
L35	14.40'	S62°43'33"W	9912.18	10177.38
L36	0.65'	S27°16'27"E	9864.69	10251.37
L37	12.12'	N87°16'27"W	9867.03	10265.35
L38	9.00'	S02°43'33"W	9876.02	10265.78
L39	31.18'	S27°16'27"E	9903.73	10251.49
L40	16.00'	N87°16'27"W	9903.73	10251.49
L41	17.39'	S89°42'14"E	9919.30	10239.67
L42	16.00'	S00°17'46"W	9917.20	10259.05
L43	36.00'	S89°42'14"E	9901.20	10258.97
L44	6.00'	S00°17'46"W	9907.01	10295.00
L45	12.00'	N89°42'14"W	9906.95	10307.00
L46	10.00'	S00°17'46"W	9916.95	10307.05
L47	29.31'	N89°42'14"W	9918.79	10338.37
L48	17.29'	S57°16'27"E	9913.58	10330.16
L49	8.39'	N62°43'33"E	9909.73	10322.70
L50	8.39'	N62°43'33"E	9904.97	10313.46
L51	8.39'	S62°43'33"W	9904.06	10311.69
L52	8.39'	S62°43'33"W	9899.29	10302.45
L53	8.39'	S62°43'33"W	9894.53	10293.21
L54	8.39'	S62°43'33"W	9889.77	10283.98
L55	9.00'	S32°43'33"W	9885.01	10274.74
L56	12.12'	N57°16'27"W	9870.88	10280.07
L57	16.62'	N62°43'33"E	9859.80	10265.13

LINE TABLE				
LINE NO.	LENGTH	DIRECTION	START NORTHING	START EASTING
L58	5.00'	S00°00'05"W	9796.00	10550.25
L59	16.00'	S89°59'55"E	9789.00	10552.25
L60	16.00'	S00°00'05"W	9778.00	10568.25
L61	61.00'	S00°00'05"W	9759.33	10568.25
L62	16.67'	S89°59'55"E	9759.33	10551.58
L64	16.67'	N89°59'55"W	9762.00	10568.25
L65	61.00'	S00°00'05"W	9726.00	10568.25
L68	10.67'	N89°59'55"W	9728.67	10562.25
L69	10.80'	S00°00'05"W	9661.00	10550.25
L70	16.62'	N89°59'55"W	9663.00	10568.87
L71	8.90'	S00°00'05"W	9650.21	10550.25
L72	4.82'	S00°00'05"W	9637.58	10514.25
L73	19.19'	N82°58'06"E	9655.08	10472.75
L74	8.13'	N42°24'26"W	9645.74	10477.00
L75	24.00'	N47°35'34"E	9629.56	10459.28
L76	8.88'	S42°24'26"E	9636.12	10453.29
L77	26.27'	N71°29'09"E	9614.92	10412.51
L78	41.22'	N79°50'34"E	9607.65	10371.94
L79	5.15'	N72°16'38"W	9642.09	10339.54
L80	47.14'	S62°43'33"W	9726.60	10550.47
L81	2.76'	N17°38'28"E	9702.36	10507.73
L82	35.80'	N82°58'06"E	9672.69	10443.99
L83	9.29'	S22°58'06"W	9689.45	10483.67
L84	10.79'	S62°43'33"W	9700.29	10499.66
L85	2.22'	N00°00'05"E	9689.19	10514.25
L86	24.30'	N82°58'06"E	9676.29	10481.35
L87	60.47'	N62°43'33"E	9689.48	10439.41
L88	12.00'	N27°16'28"W	9678.82	10444.91
L89	13.06'	S27°16'27"E	9689.48	10439.41
L90	3.79'	S22°58'06"W	9676.17	10445.46
L91	8.88'	S82°58'06"W	9671.48	10442.39
L92	27.28'	N72°16'27"W	9672.51	10412.27
L93	27.28'	N72°16'27"W	9672.51	10412.27
L94	65.17'	N72°16'27"W	9672.40	10412.24
L95	62.69'	N27°16'27"W	9707.06	10332.63
L96	29.27'	S62°43'33"W	9720.75	10325.58
L97	18.98'	S61°44'14"W	9672.99	10302.65
L98	6.00'	S28°15'46"E	9669.28	10283.07
L99	13.95'	S61°44'14"W	9675.89	10295.36
L100	6.00'	S62°43'33"W	9886.66	10192.08
L101	182.97'	N27°16'27"W	9721.28	10270.60
L102	17.94'	S62°43'33"W	9729.50	10286.54
L103	11.51'	S02°43'33"W	9816.03	10296.98
L104	29.44'	S62°43'33"W	9829.53	10323.15
L105	19.05'	N02°43'33"E	9810.49	10322.25
L106	31.18'	S62°43'33"W	9824.78	10349.96
L107	19.05'	S02°43'33"W	9843.81	10350.87
L108	51.96'	S62°43'33"W	9867.62	10397.05
L109	19.05'	N02°43'33"E	9848.59	10396.14
L110	31.18'	S62°43'33"W	9862.88	10423.85

LINE TABLE				
LINE NO.	LENGTH	DIRECTION	START NORTHING	START EASTING
L111	19.05'	S02°43'33"W	9881.91	10424.76
L112	14.97'	S62°43'33"W	9888.77	10438.07
L113	67.98'	N89°42'14"W	9888.42	10506.05
L114	9.13'	N59°42'14"W	9883.81	10513.93
L115	10.30'	N30°17'46"E	9874.92	10508.74
L116	30.29'	N89°59'55"W	9880.99	10550.25
L117	14.50'	N89°59'55"W	9879.00	10566.75
L118	81.00'	N00°00'05"E	9798.00	10566.75
L119	14.50'	S89°59'55"E	9798.00	10552.25
L120	30.00'	S89°59'55"E	9796.00	10520.25
L121	41.90'	S00°00'05"W	9837.90	10520.25
L122	55.14'	S89°42'14"E	9848.18	10455.16
L123	149.69'	N62°43'33"E	9776.25	10308.21
L124	17.29'	N27°16'27"W	9747.41	10311.83
L125	22.50'	N62°43'33"E	9737.10	10291.83
L126	0.29'	S27°16'27"E	9737.36	10291.70
L127	14.50'	N62°43'33"E	9732.23	10274.09
L128	16.50'	S27°16'27"E	9746.89	10266.53
L129	14.50'	S62°43'33"W	9753.54	10279.42
L130	7.03'	S27°16'27"E	9762.48	10277.06
L131	15.59'	N32°43'33"E	9749.53	10265.17
L132	150.36'	S27°16'27"E	9883.17	10196.27
L133	175.98'	N27°16'27"W	9730.21	10273.45
L134	16.72'	N32°43'33"E	9886.62	10192.80
L135	28.84'	S27°16'27"E	9939.19	10167.56
L136	5.06'	S62°43'33"W	9941.50	10172.06
L137	67.26'	N89°42'14"W	9947.66	10266.43
L139	4.05'	N29°51'30"W	9944.15	10268.44
L140	196.68'	N89°42'14"W	9943.13	10465.12
L141	4.05'	S30°28'50"W	9946.62	10467.17
L143	26.01'	N89°34'25"W	9946.43	10493.18
L144	30.51'	N00°17'46"E	9915.92	10493.02
L145	14.03'	N00°17'46"E	9900.00	10490.31
L146	55.01'	S89°42'14"E	9900.29	10435.31
L147	167.04'	N62°43'33"E	9823.74	10286.84
L148	15.45'	S57°16'27"E	9832.09	10273.84
L149	25.72'	N27°16'27"W	9802.14	10283.61
L150	14.01'	N32°22'09"E	9940.34	10523.43
L151	23.27'	S89°42'14"E	9948.12	10467.29
L152	49.18'	S81°31'14"E	9955.37	10418.65
L153	100.00'	S89°42'14"E	9955.89	10318.65
L154	52.74'	N82°40'10"E	9949.16	10266.34
L155	67.16'	S89°42'14"E	9949.51	10199.18
L157	4.31'	S62°43'33"W	9941.93	10169.61
L158	17.86'	N25°42'09"W	9953.67	10124.99
L159	16.00'	N89°59'55"W	9888.00	10568.25
L160	16.63'	S89°59'55"E	9879.00	10552.25
L161	5.00'	S00°00'05"W	9886.00	10550.25

CURVE TABLE			
CURVE NO.	LENGTH	RADIUS	DELTA
C5	28.69'	30.08'	54°39'24"
C6	23.85'	22.17'	61°38'26"
C7	3.14'	2.00'	89°59'50"
C8	2.17'	2.00'	62°07'11"
C9	0.97'	2.00'	27°52'49"
C10	32.37'	34.00'	54°33'10"
C11	26.14'	54.00'	27°44'19"
C12	5.35'	2.00'	153°11'56"
C13	253.77'	6940.00'	2°05'42"
C14	81.16'	6940.00'	0°40'12"
C15	145.47'	590.00'	14°07'35"
C16	17.69'	590.00'	1°43'04"
C17	16.83'	6940.00'	0°08'20"
C18	26.54'	584.25'	2°36'10"
C19	96.06'	554.40'	9°55'39"
C20	21.88'	34.60'	36°14'04"
C21	3.71'	26.23'	8°05'43"
C22	21.58'	35.74'	34°35'03"
C23	79.17'	24375.32'	0°11'10"
C24	26.54'	3202.78'	0°28'29"
C25	37.79'	862.35'	2°30'40"
C26	34.38'	5232.38'	0°22'35"
C27	13.92'	15.00'	53°10'43"
C28	9.36'	15.00'	35°44'32"
C29	15.71'	10.00'	90°00'00"
C30	4.19'	2.00'	120°00'00"
C31	10.94'	6.00'	104°28'39"
C32	12.76'	10.00'	73°05'34"
C33	3.14'	2.00'	90°00'00"
C34	3.14'	2.00'	90°00'00"
C35	19.33'	10.00'	110°45'19"
C36	3.55'	2.00'	101°40'28"
C37	4.19'	2.00'	120°00'00"
C38	3.14'	2.00'	90°00'00"
~~C39~~	~~2.10'~~	~~1.33'~~	~~90°39'24"~~
~~C40~~	~~2.07'~~	~~1.33'~~	~~89°20'36"~~
C41	2.10'	1.33'	90°39'24"
C42	2.07'	1.33'	89°20'36"
C43	3.14'	2.00'	90°00'00"
C44	24.68'	15.00'	94°16'02"
C45	78.92'	584.51'	7°44'08"
C46	20.80'	15.00'	79°26'01"
C47	20.80'	15.00'	79°26'01"
C48	33.87'	20.00'	97°01'59"
C49	4.38'	2.00'	125°22'32"
C50	4.00'	2.00'	114°37'28"
C51	16.94'	20.00'	48°31'03"
C52	1.52'	2.00'	43°26'44"
C53	29.25'	22.33'	75°02'55"
C54	48.37'	22.33'	124°05'15"

CURVE TABLE			
CURVE NO.	LENGTH	RADIUS	DELTA
C55	4.46'	2.00'	127°48'38"
C56	6.94'	10.00'	39°45'26"
C57	20.47'	10.00'	117°16'32"
C58	14.48'	10.00'	82°58'01"
C59	4.19'	2.00'	120°00'00"
C60	54.74'	50.00'	62°43'28"
C61	1.75'	2.00'	50°14'34"
C62	2.09'	2.00'	60°00'00"
C63	21.60'	50.00'	24°45'26"
C64	23.56'	30.00'	45°00'00"
C65	42.50'	80.00'	30°26'28"
C66	65.84'	50.00'	75°26'38"
C67	18.72'	56.74'	18°54'15"
C68	36.10'	73.37'	28°11'28"
C69	1.50'	24.01'	3°34'48"
C70	7.85'	7.50'	60°00'00"
C71	4.32'	2.00'	123°39'33"
C72	14.21'	10.00'	81°25'36"
C74	3.14'	2.00'	90°00'00"
C75	15.66'	10.00'	89°42'19"
C76	14.44'	30.00'	27°34'13"
C77	15.71'	10.00'	90°00'00"
C78	5.50'	3.50'	90°00'00"
C79	3.14'	2.00'	90°00'00"
C80	4.19'	2.00'	120°00'00"
C81	7.92'	6.00'	75°38'01"
C82	22.29'	20.00'	63°50'52"
C83	28.15'	58.50'	27°34'13"
C84	3.78'	2.00'	108°19'36"
C85	4.08'	2.00'	116°47'30"
C86	5.80'	10.00'	33°12'30"
C87	44.63'	40.00'	63°55'33"
C88	80.34'	78.63'	58°32'49"
C89	59.46'	60.00'	56°46'57"
C90	3.08'	2.00'	88°09'05"
C91	31.96'	60.00'	30°31'09"
C92	28.87'	60.00'	27°34'13"
C94	19.32'	29.46'	37°34'16"
C95	3.14'	2.00'	90°00'00"
C96	3.14'	2.00'	90°00'00"

IDENTIFICATION STAMP
DIV. OF THE STATE ARCHITECT
APP: 03-121324 INC:
REVIEWED FOR
SS ☐ FLS ☐ ACS ☑
DATE: 09/14/2022

OFFICE OF THE STATE FIRE MARSHAL
APPROVED FIRE AND PANIC ONLY
09/07/22
21-0233
Approval of this plan does not authorize or approve any omission or deviation from applicable regulations. Final approval is subject to field inspection. One set of approved plans shall be available on the project site at all times.

DGS GENERAL SERVICES
Department of General Services
Architecture & Engineering Sections
State of California
Real Estate Services Division
Project Management & Development Branch
707 Third Street, Suite 4-105
West Sacramento, California 95605

REGISTERED PROFESSIONAL ENGINEER
JAMES DIGIORGIO
No. C-55479
Exp. 12/31/22
CIVIL
STATE OF CALIFORNIA
1/21/22

DMV
State of California
Department of Motor Vehicles

Issue		
No.	Date	Description
1	9/2/22	

Project
SANTA MARIA FIELD OFFICE REPLACEMENT
2770 SANTA MARIA WAY
SANTA MARIA, CA 93455
SANTA BARBARA COUNTY
DEPT OF MOTOR VEHICLES

Supervisor	Designed	Drawn
J.DIGIORGIO	C.ELLICOCK	C.ELLICOCK

DSA App No. 03-121324
SFM Permit No. 21-S-0233-CP-ER

Sheet Title
CIVIL
LINE AND
CURVE TABLES

Project Number
DGS000000140725

Reference North
Sheet Scale
Sheet Number
C205

Copyright © 2022, California Department of General Services - Real Estate Services Division

CAD File: X:\Projects\14xxxx\140725\DWG\PLTC\205 CIVIL LINE AND CURVE TABLES.dwg Plot Date: Jan 21, 2022 - 12:47am Plotted by: CEllicoc

RELATIVE BORDER SCALE IN INCHES 0 1 2 3

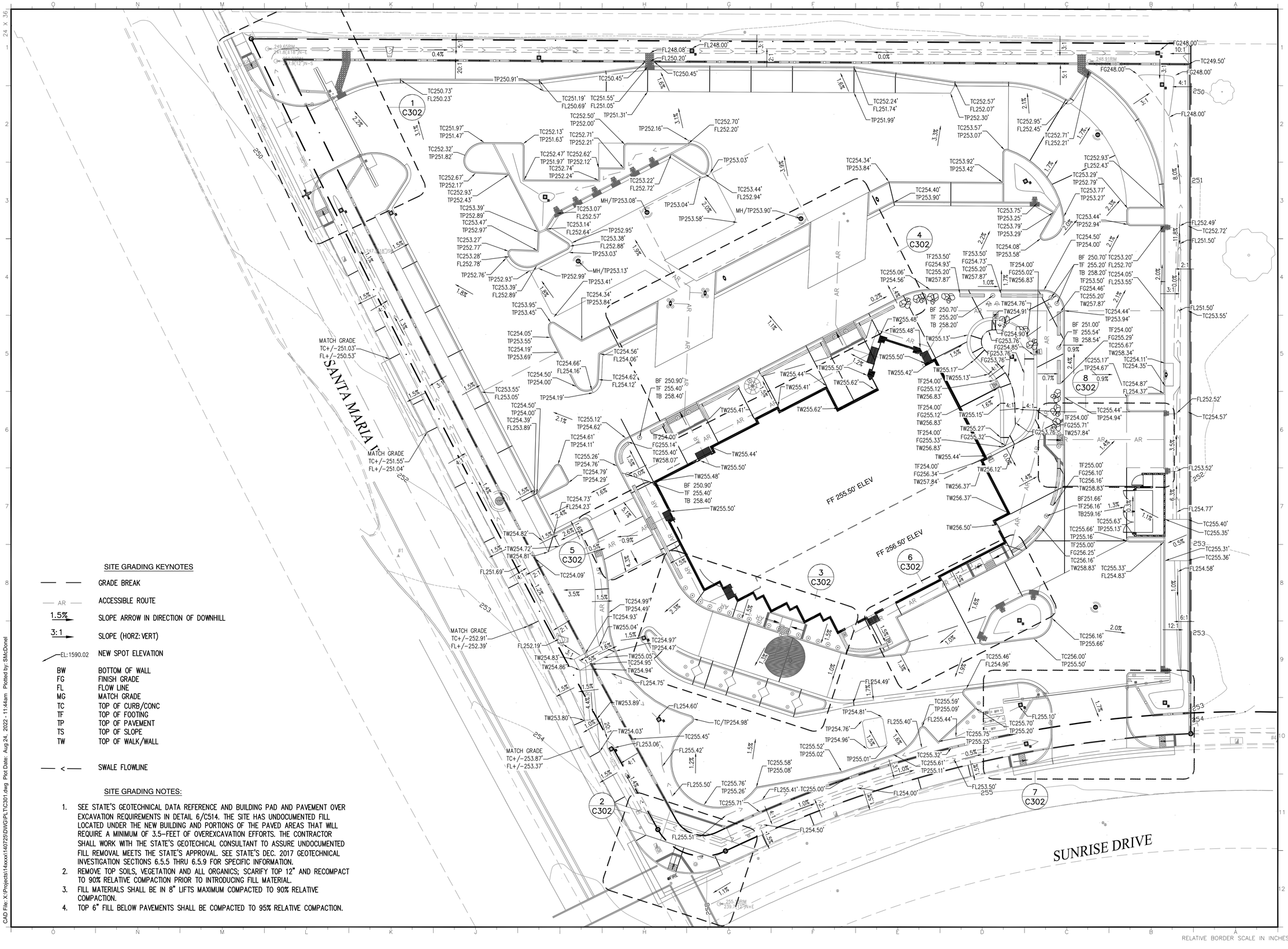

SITE GRADING KEYNOTES

— —	GRADE BREAK
— AR —	ACCESSIBLE ROUTE
1.5% →	SLOPE ARROW IN DIRECTION OF DOWNHILL
3:1 →	SLOPE (HORZ:VERT)
EL:1590.02	NEW SPOT ELEVATION
BW	BOTTOM OF WALL
FG	FINISH GRADE
FL	FLOW LINE
MG	MATCH GRADE
TC	TOP OF CURB/CONC
TF	TOP OF FOOTING
TP	TOP OF PAVEMENT
TS	TOP OF SLOPE
TW	TOP OF WALK/WALL
— < —	SWALE FLOWLINE

SITE GRADING NOTES:

1. SEE STATE'S GEOTECHNICAL DATA REFERENCE AND BUILDING PAD AND PAVEMENT OVER EXCAVATION REQUIREMENTS IN DETAIL 6/C514. THE SITE HAS UNDOCUMENTED FILL LOCATED UNDER THE NEW BUILDING AND PORTIONS OF THE PAVED AREAS THAT WILL REQUIRE A MINIMUM OF 3.5-FEET OF OVEREXCAVATION EFFORTS. THE CONTRACTOR SHALL WORK WITH THE STATE'S GEOTECHICAL CONSULTANT TO ASSURE UNDOCUMENTED FILL REMOVAL MEETS THE STATE'S APPROVAL. SEE STATE'S DEC. 2017 GEOTECHNICAL INVESTIGATION SECTIONS 6.5.5 THRU 6.5.9 FOR SPECIFIC INFORMATION.
2. REMOVE TOP SOILS, VEGETATION AND ALL ORGANICS; SCARIFY TOP 12" AND RECOMPACT TO 90% RELATIVE COMPACTION PRIOR TO INTRODUCING FILL MATERIAL.
3. FILL MATERIALS SHALL BE IN 8" LIFTS MAXIMUM COMPACTED TO 90% RELATIVE COMPACTION.
4. TOP 6" FILL BELOW PAVEMENTS SHALL BE COMPACTED TO 95% RELATIVE COMPACTION.

IDENTIFICATION STAMP
DIV. OF THE STATE ARCHITECT
APP: 03-121324 INC:
REVIEWED FOR
SS ☐ FLS ☐ ACS ☑
DATE: 09/14/2022

OFFICE OF THE STATE FIRE MARSHAL
APPROVED FIRE AND PANIC ONLY
09/07/22
21-0233
Approval of this plan does not authorize or approve any omission or deviation from applicable regulations. Final approval is subject to field inspection. One set of approved plans shall be available on the project site at all times.

DGS GENERAL SERVICES

Department of General Services
Architecture & Engineering Sections
State of California
Real Estate Services Division
Project Management & Development Branch
707 Third Street, Suite 4-105
West Sacramento, California 95605

REGISTERED PROFESSIONAL ENGINEER
Scott C. McDonell
No. C-62154
CIVIL
STATE OF CALIFORNIA
8/24/22

DMV
State of California
Department of Motor Vehicles

Issue

No.	Date	Description
1	9/2/22	

Project
SANTA MARIA FIELD OFFICE REPLACEMENT
2770 SANTA MARIA WAY
SANTA MARIA, CA 93455
SANTA BARBARA COUNTY

DEPT OF MOTOR VEHICLES

Supervisor	Designed	Drawn
E.VELAGIC	S.MCDONELL	S.MCDONELL

DSA App No.	SFM Permit No.
03-121324	21-S-0233-CP-ER

Sheet Title
CIVIL SITE GRADING PLAN

Project Number
DGS000000140725

Reference North

Sheet Scale
1"=20'

Sheet Number
C301

© Copyright 2022, California Department of General Services - Real Estate Services Division

CAD File: X:\Projects\14xxxx\140725\DWG\PLTC301.dwg Plot Date: Aug 24, 2022 - 11:44am Plotted by: SMcDonel

RELATIVE BORDER SCALE IN INCHES 0 1 2 3

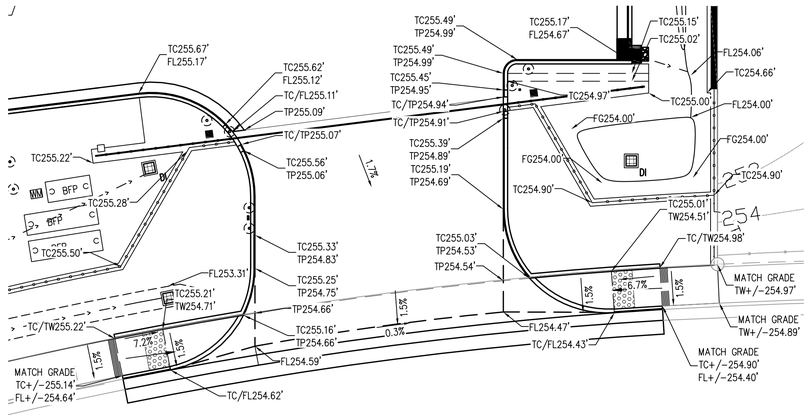

7 ENLARGED AREA
SCALE: 1" = 10'

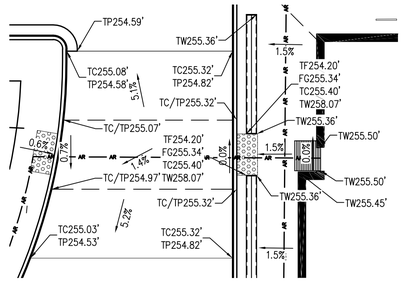

5 ENLARGED AREA
SCALE: 1" = 10'

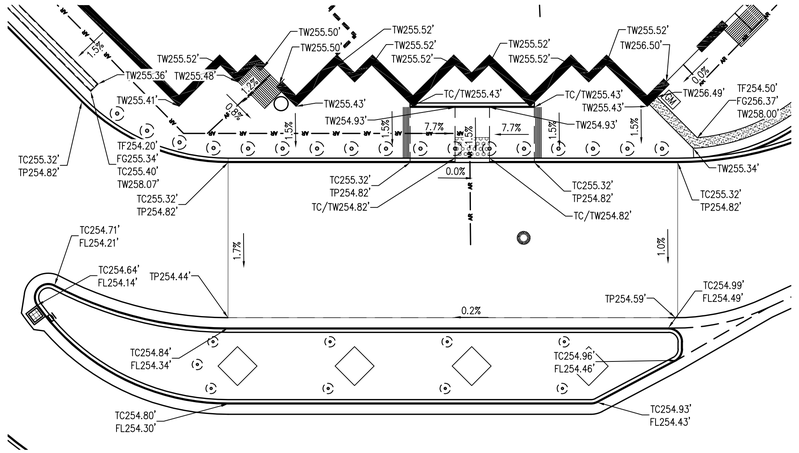

3 ENLARGED AREA
SCALE: 1" = 10'

10 0 10 20
SCALE OF FEET

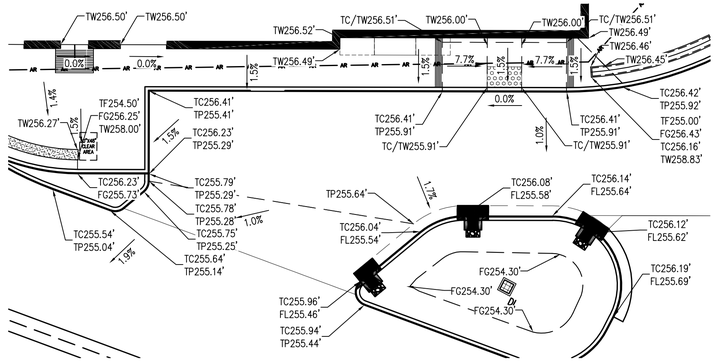

6 ENLARGED AREA
SCALE: 1" = 10'

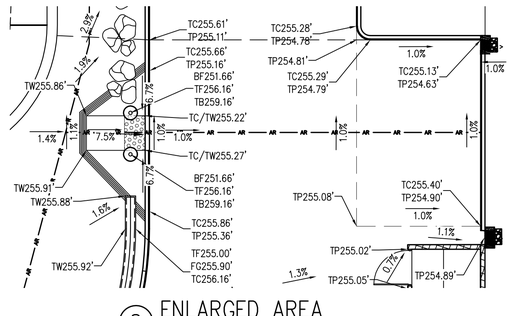

8 ENLARGED AREA
SCALE: 1" = 10'

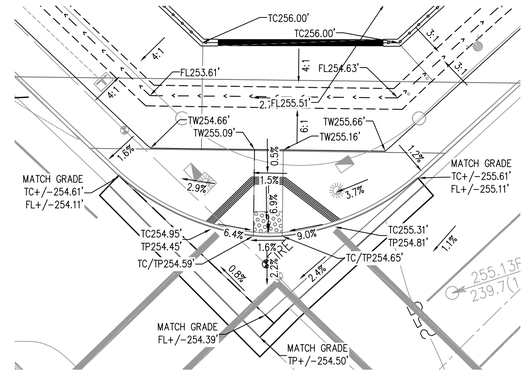

2 ENLARGED AREA
SCALE: 1" = 10'

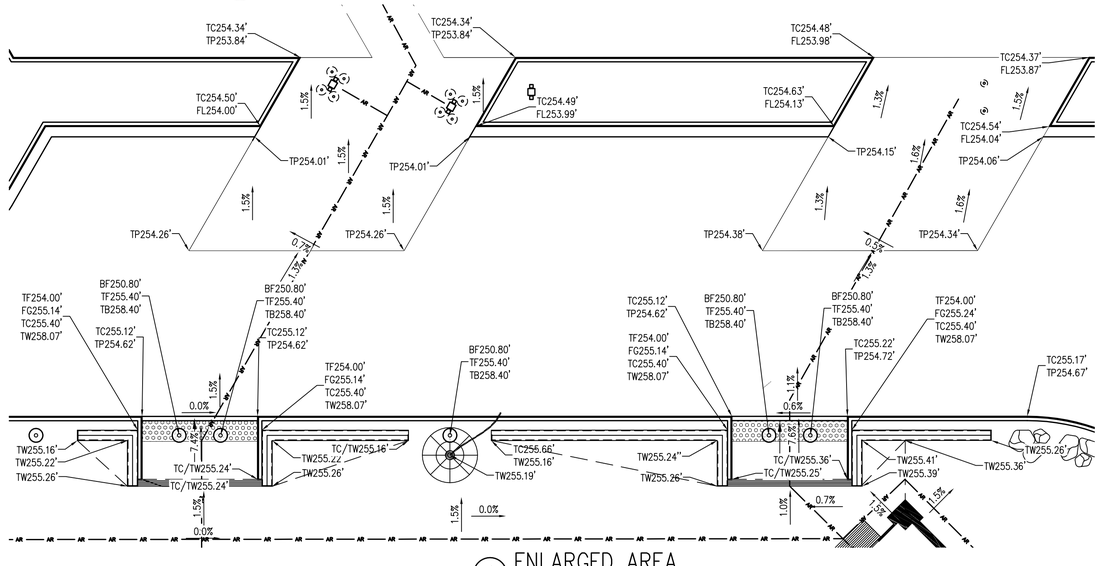

4 ENLARGED AREA
SCALE: 1" = 10'

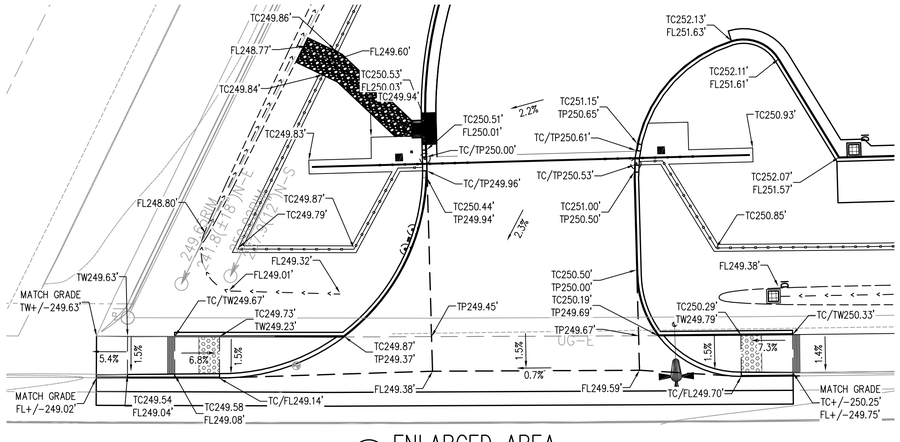

1 ENLARGED AREA
SCALE: 1" = 10'

IDENTIFICATION STAMP
DIV. OF THE STATE ARCHITECT
APP: 03-121324 INC:
REVIEWED FOR
SS ☐ FLS ☐ ACS ☑
DATE: 09/14/2022

OFFICE OF THE STATE FIRE MARSHAL
APPROVED FIRE AND PANIC ONLY
09/07/22
21-0233
Approval of this plan does not authorize or approve any omission or deviation from applicable regulations. Final approval is subject to field inspection. One set of approved plans shall be available on the project site at all times.

DGS GENERAL SERVICES
Department of General Services
Architecture & Engineering Sections
State of California
Real Estate Services Division
Project Management & Development Branch
707 Third Street, Suite 4-105
West Sacramento, California 95605

REGISTERED PROFESSIONAL ENGINEER
Scott C. McDonell
No. C-62154
CIVIL
STATE OF CALIFORNIA
8/24/22

DMV
State of California
Department of Motor Vehicles

Issue		
No.	Date	Description
1	9/2/22	

Project
SANTA MARIA FIELD OFFICE REPLACEMENT
2770 SANTA MARIA WAY
SANTA MARIA, CA 93455
SANTA BARBARA COUNTY

DEPT OF MOTOR VEHICLES

Supervisor	Designed	Drawn
E. VELAGIC	S. MCDONELL	S. MCDONELL

DSA App No.	SFM Permit No.
03-121324	21-S-0233-CP-ER

Sheet Title
CIVIL ENLARGED GRADING PLAN

Project Number
DGS000000140725

Reference North

Sheet Scale
1" = 10'-0"

Sheet Number
C302

© Copyright © 2022, California Department of General Services - Real Estate Services Division

CAD File: X:\Projects\14xxxx\140725\DWG\PLTC302.dwg, Plot Date: Aug 24, 2022 - 11:41am Plotted by: SMcDonel

RELATIVE BORDER SCALE IN INCHES 0 1 2 3

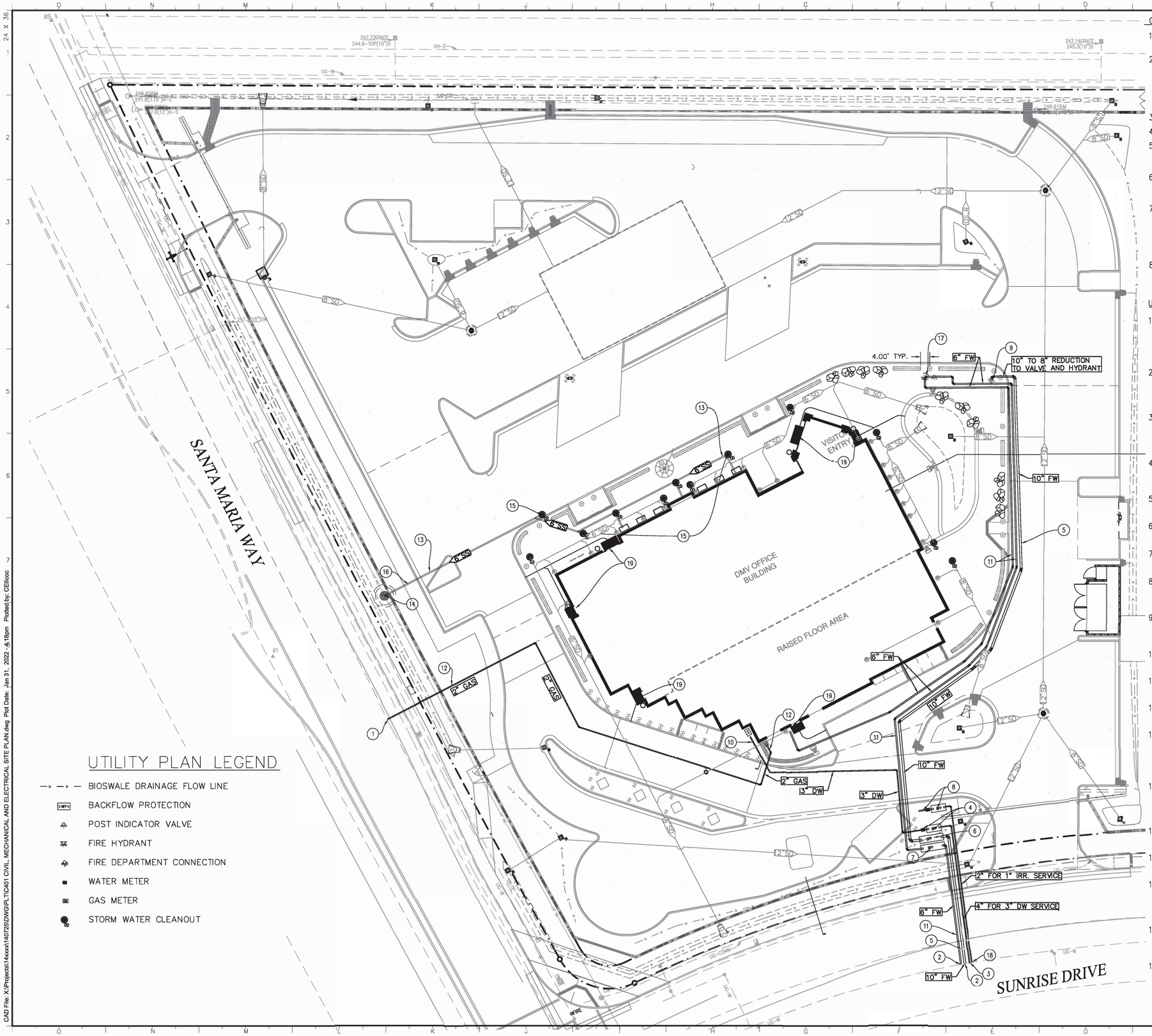

UTILITY PLAN LEGEND

- BIOSWALE DRAINAGE FLOW LINE
- BACKFLOW PROTECTION
- POST INDICATOR VALVE
- FIRE HYDRANT
- FIRE DEPARTMENT CONNECTION
- WATER METER
- GAS METER
- STORM WATER CLEANOUT

GENERAL SHEET NOTES:

1. SEE MECHANICAL AND PLUMBING SHEETS FOR SIZE OF BUILDING UTILITY LATERALS UNLESS SIZE IS SHOWN ON UTILITY PLANS.
2. THRUST BLOCKS ARE NOT SHOWN ON PLANS FOR CLARITY. ALL TEES, PLUGS, CAPS, BENDS, REDUCERS, VALVES, AND HYDRANT BRANCHES SHALL BE RESTRAINED AGAINST MOVEMENT BY USING THRUST BLOCKS. PROVIDE THRUST BLOCKS ON ALL FIRE WATER LINES PER NFPA 24 2016 EDITION AND AS NOTED ON C002. DOMESTIC WATER LINES PER DETAIL WA-13/C508.
3. ALL VALVES SHALL BE INSTALLED WITH VALVE BOXES.
4. USE LONG RADIUS FITTINGS FOR ALL UTILITY LINES.
5. CONTRACTOR IS RESPONSIBLE FOR PROVIDING ALL MISCELLANEOUS FITTINGS REQUIRED FOR THE PROPOSED UTILITY LINES SHOWN IN THE PLANS.
6. EXISTING SS APPROXIMATELY 15 FEET BELOW GRADE. VERIFY DEPTH OF EXISTING SEWER MAIN AND SUBMIT PROPOSED NEW SEWER LINE INVERTS PRIOR TO CONSTRUCTION.
7. WATER MAINS SHALL BE:
   - 7.1. DUCTILE-IRON PIPE AWWA C151, CLASS 350 W/ HOT DIP BITUMINOUS COATING
   - 7.2. AWWA C-900, CLASS 200 PVC PIPE W/RUBBER RING JOINTS
8. STORM DRAIN SHOWN FOR CROSSING AND UTILITY COORDINATION ONLY. REFER TO SHEET C402 FOR STORM DRAIN SYSTEM INFORMATION.

UTILITY PLAN KEYNOTES:

1. CONNECT TO EXISTING HIGH PRESSURE GAS LINE. VERIFY POINT OF CONNECTION. COORDINATE WITH PG&E ALL CONNECTION AND INSTALLATION REQUIREMENTS. PROVIDE GAS METER ASSEMBLY, SIZE FOR 830 CFH. INLET PRESSURE DETERMINED BY PG&E; OUTLET PRESSURE 5 PSI.
2. FIRE WATER SERVICE – CONNECT TO EXISTING 12" WATER LINE IN SUNRISE DRIVE PER CITY OF SANTA MARIA STANDARD DETAILS, SEE SHEET C508 TO C510. LINE SIZE AS INDICATED. DETAIL 1/C403
3. DOMESTIC WATER SERVICE – CONNECT TO EXISTING 12" WATER LINE IN SUNRISE DRIVE PER CITY OF SANTA MARIA STANDARD DETAILS, SEE SHEET C508 TO C510 FOR A 3" WATER SERVICE. DETAIL 1/C403
4. PROVIDE 3" DOMESTIC WATER METER, REDUCED PRESSURE BACKFLOW PREVENTER PER CITY OF SANTA MARIA STANDARD DETAILS SEE WA-29/C510.
5. PROVIDE FIRE HYDRANT WATER LINE, SIZE AS INDICATED. DETAIL 1/C403
6. PROVIDE 10" BACKFLOW PREVENTER PER CITY OF SANTA MARIA STANDARD DETAIL WA-27F/C510.
7. PROVIDE 6" BACKFLOW PREVENTER PER CITY OF SANTA MARIA STANDARD DETAIL WA-27F/C510.
8. PROVIDE 1" IRRIGATION METER, REDUCED PRESSURE BACKFLOW PREVENTER PER CITY OF SANTA MARIA STANDARD DETAILS SEE WA-29/C510. SEE LANDSCAPING.
9. PROVIDE FIRE HYDRANT, SEE WA-31/C508 AND WA-20A/C508. VEHICLE PROTECTION PROVIDED BY DETAIL 1/C512 AND 10/C512.
10. PROVIDE DOMESTIC WATER LINE, SIZE AS INDICATED. DETAIL 1/C403
11. PROVIDE FIRE SPRINKLER WATER LINE, SIZE AS INDICATED. DETAIL 1/C403
12. PROVIDE NATURAL GAS LINE PER CPC CHAPTER 12, SIZE AS INDICATED, TRENCH DETAIL 1/C403. PIPE COVER 24" MIN.
13. PROVIDE SANITARY SEWER LINE, SIZE AS INDICATED. 2.0% MIN AND 5.0% MAX SLOPE TO SEWER MAIN IN SANTA MARIA WAY. EXISTING SEWER MAIN IS APPROXIMATELY 15FT BELOW GRADE VERIFY DEPTH AND SUBMIT PROPOSED NEW SEWER LINE INVERTS PRIOR TO CONSTRUCTION.
14. PROVIDE SANITARY SEWER MANHOLE FOR THE CONNECTION OF THE 6" SITE SS LINE TO THE EXISTING 10" SS LINE IN SANTA MARIA WAY PER CITY OF SANTA MARIA STANDARD DETAIL SS-10D & SS-13A/C507.
15. PROVIDE SANITARY SEWER CLEANOUT TO GRADE PER CITY OF SANTA MARIA STANDARD DETAIL SS-12B/C507, TYP.
16. PROVIDE SANITARY SEWER SEWER LATERAL PER CITY OF SANTA MARIA STANDARD DETAIL SS-14B/C507, TYP.
17. PROVIDE FDC AND PIV, SEE WA-27F DESIGN OPTION FOR FDC LOCATION SHEET C510 AND 1/C509 FOR PIV. 36" REQUIRED CLEARANCE AROUND FDC. VEHICLE PROTECTION PROVIDED BY DETAIL 1/C512 AND 10/C512.
18. CONNECT TO EXISTING 12" WATER LINE IN SUNRISE DRIVE PER CITY OF SANTA MARIA STANDARD DETAILS, SEE SHEET C508 TO C510 FOR A 1" IRRIGATION WATER SERVICE.
19. PROVIDE 3" PVC DRAIN LINE FROM WALK-OFF MAT TO CURB FACE. SLOPE TO DRAIN TO PAVEMENT/LANDSCAPE GRADE. USE 90° DRAIN CONNECTION, LONG SWEEP BENDS, AND "Y" CONNECTIONS AS SHOWN. SEE DETAIL 11/A504.

IDENTIFICATION STAMP
DIV. OF THE STATE ARCHITECT
APP: 03-121324 INC: A
REVIEWED FOR
SS ☐ FLS ☐ ACS ☑
DATE: 09/14/2022

OFFICE OF THE STATE FIRE MARSHAL
APPROVED FIRE AND PANIC ONLY
09/07/22
21-0233
Approval of this plan does not authorize or approve any omission or deviation from applicable regulations. Final approval is subject to field inspection. One set of approved plans shall be available on the project site at all times.

DGS GENERAL SERVICES

Department of General Services
Architecture & Engineering Sections
State of California
Real Estate Services Division
Project Management & Development Branch
707 Third Street, Suite 4-105
West Sacramento, California 95605

REGISTERED PROFESSIONAL ENGINEER
JAMES DIGIORGIO
No. C-55479
Exp. 12/31/22
CIVIL
STATE OF CALIFORNIA
1/31/22

DMV
State of California
Department of Motor Vehicles

Issue		
No.	Date	Description
1	9/2/22	

Project
SANTA MARIA FIELD OFFICE REPLACEMENT
2770 SANTA MARIA WAY
SANTA MARIA, CA 93455
SANTA BARBARA COUNTY

DEPT OF MOTOR VEHICLES

Supervisor	Designed	Drawn
J.DIGIORGIO	C.ELLICOCK	C.ELLICOCK

DSA App No. 03-121324
SFM Permit No. 21-S-0233-CP-ER

Sheet Title
CIVIL UTILITY SITE PLAN

Project Number
DGS000000 140725

Reference North
Sheet Scale 1"=20'
Sheet Number C401

Copyright © 2022, Caution is Department of GeneralServices - Real EstateServices Division

CAD File: X:\Projects\14xxxx\140725\DWG\PLTC401 CIVIL, MECHANICAL AND ELECTRICAL SITE PLAN.dwg Plot Date: Jan 31, 2022 - 5:18pm Plotted by: CEllicoc

RELATIVE BORDER SCALE IN INCHES 0 1 2 3

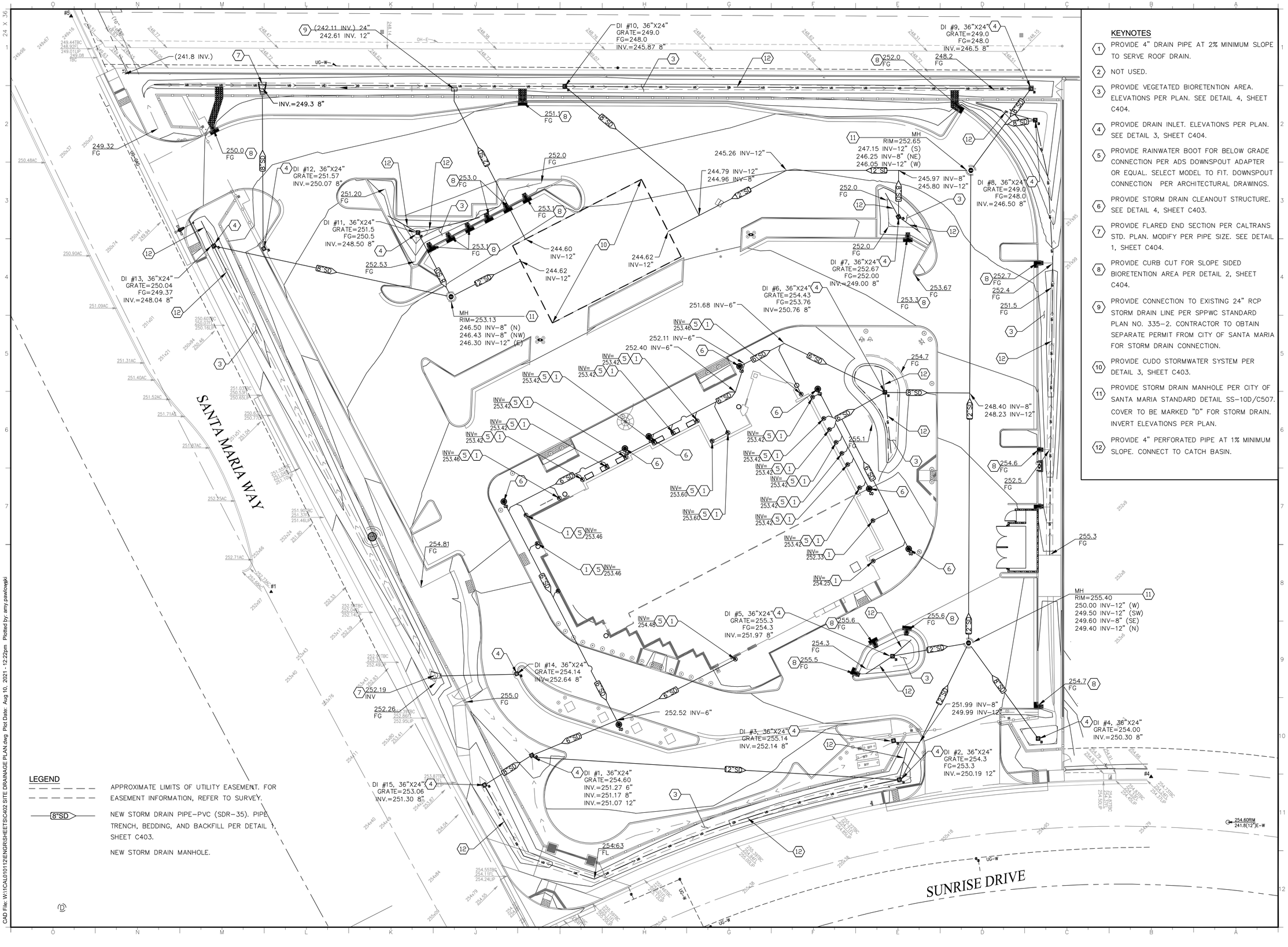

KEYNOTES

1. PROVIDE 4" DRAIN PIPE AT 2% MINIMUM SLOPE TO SERVE ROOF DRAIN.
2. NOT USED.
3. PROVIDE VEGETATED BIORETENTION AREA. ELEVATIONS PER PLAN. SEE DETAIL 4, SHEET C404.
4. PROVIDE DRAIN INLET. ELEVATIONS PER PLAN. SEE DETAIL 3, SHEET C404.
5. PROVIDE RAINWATER BOOT FOR BELOW GRADE CONNECTION PER ADS DOWNSPOUT ADAPTER OR EQUAL. SELECT MODEL TO FIT. DOWNSPOUT CONNECTION PER ARCHITECTURAL DRAWINGS.
6. PROVIDE STORM DRAIN CLEANOUT STRUCTURE. SEE DETAIL 4, SHEET C403.
7. PROVIDE FLARED END SECTION PER CALTRANS STD. PLAN. MODIFY PER PIPE SIZE. SEE DETAIL 1, SHEET C404.
8. PROVIDE CURB CUT FOR SLOPE SIDED BIORETENTION AREA PER DETAIL 2, SHEET C404.
9. PROVIDE CONNECTION TO EXISTING 24" RCP STORM DRAIN LINE PER SPPWC STANDARD PLAN NO. 335-2. CONTRACTOR TO OBTAIN SEPARATE PERMIT FROM CITY OF SANTA MARIA FOR STORM DRAIN CONNECTION.
10. PROVIDE CUDO STORMWATER SYSTEM PER DETAIL 3, SHEET C403.
11. PROVIDE STORM DRAIN MANHOLE PER CITY OF SANTA MARIA STANDARD DETAIL SS-10D/C507. COVER TO BE MARKED "D" FOR STORM DRAIN. INVERT ELEVATIONS PER PLAN.
12. PROVIDE 4" PERFORATED PIPE AT 1% MINIMUM SLOPE. CONNECT TO CATCH BASIN.

LEGEND

- APPROXIMATE LIMITS OF UTILITY EASEMENT. FOR EASEMENT INFORMATION, REFER TO SURVEY.
- 8"SD — NEW STORM DRAIN PIPE-PVC (SDR-35). PIPE TRENCH, BEDDING, AND BACKFILL PER DETAIL 1, SHEET C403.
- NEW STORM DRAIN MANHOLE.

IDENTIFICATION STAMP
DIV. OF THE STATE ARCHITECT
APP: 03-121324 INC:
REVIEWED FOR
SS ☐ FLS ☐ ACS ☑
DATE: 09/14/2022

OFFICE OF THE STATE FIRE MARSHAL
APPROVED FIRE AND PANIC ONLY
09/07/22
21-0233
Approval of this plan does not authorize or approve any omission or deviation from applicable regulations. Final approval is subject to field inspection. One set of approved plans shall be available on the project site at all times.

DGS GENERAL SERVICES

Department of General Services
Architecture & Engineering Sections
State of California
Real Estate Services Division
Project Management & Development Branch
707 Third Street, Suite 4-105
West Sacramento, California 95605

REGISTERED PROFESSIONAL ENGINEER
SHAWN K. CURRAN
No. 69620
CIVIL
STATE OF CALIFORNIA

Issue		
No.	Date	Description
1	9/2/22	

Project
SANTA MARIA FIELD OFFICE REPLACEMENT
2770 SANTA MARIA WAY
SANTA MARIA, CA 93455
SANTA BARBARA COUNTY

DEPT OF MOTOR VEHICLES

Supervisor	Designed	Drawn
S.CURRAN		A.PAWLOWSKI

DSA App No.	SFM Permit No.
03-121324	21-S-0233-CP-ER

Sheet Title
SITE DRAINAGE PLAN

Project Number
DGS000000140725

Reference North | Sheet Scale 1" = 20'

Sheet Number
C402

© Copyright 2020, California Department of General Services - Real Estate Services Division

CAD File: W:\1CAL01012\ENGR\SHEETS\C402 SITE DRAINAGE PLAN.dwg Plot Date: Aug 10, 2021 - 12:22pm Plotted by: amy.pawlowski

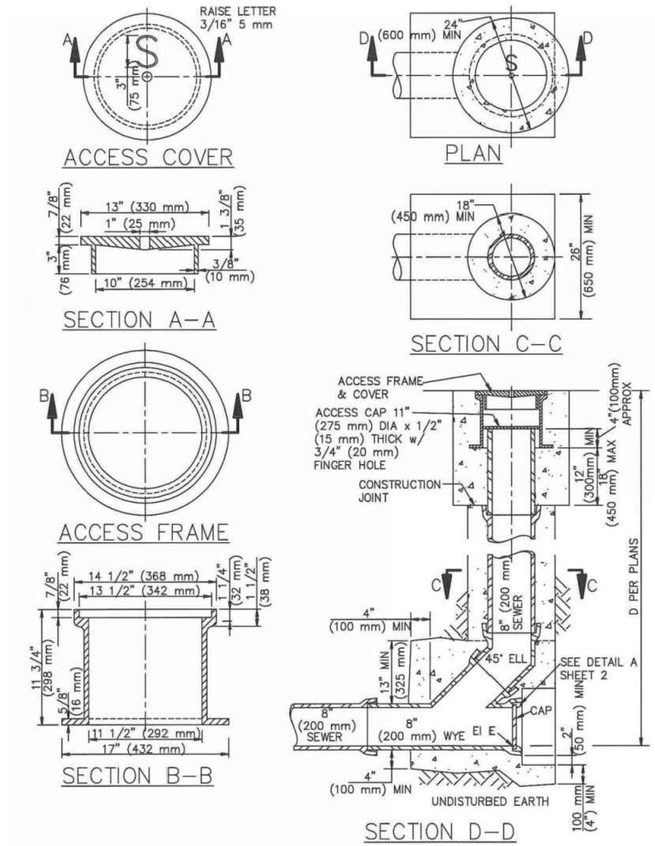

4 STORM DRAIN CLEANOUT DETAIL

C403 REF. SCALE: N.T.S.

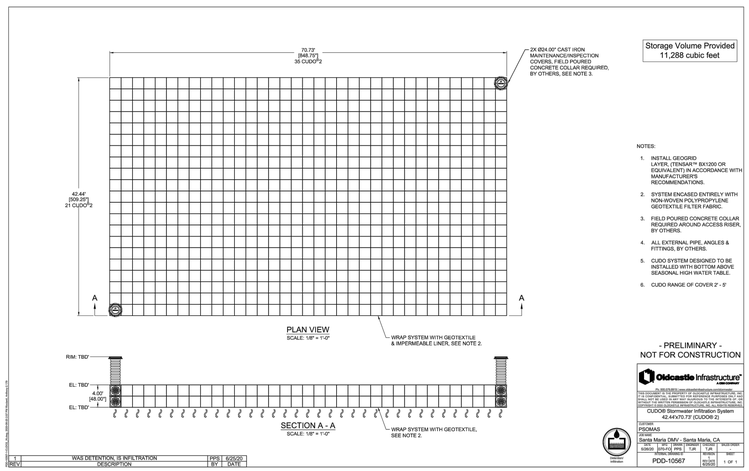

3 CUDO STORMWATER SYSTEM

C403 REF. SCALE: N.T.S.

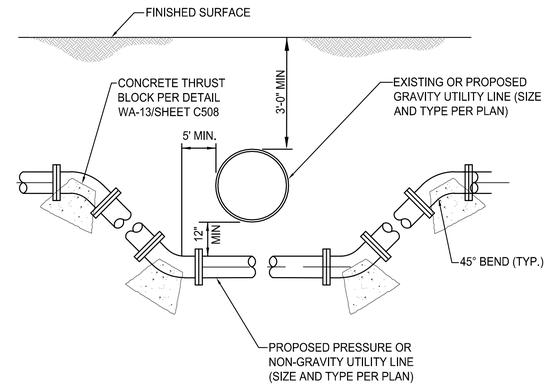

2 UTILITY CROSSING DETAIL

C403 REF. SCALE: N.T.S.

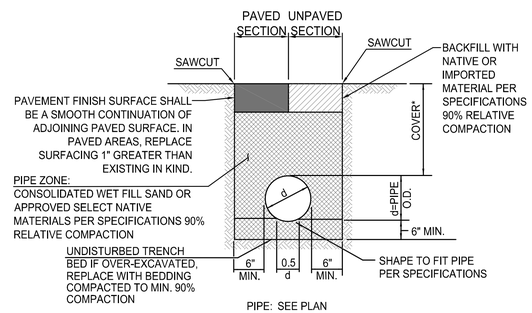

* FOR WATER PIPES, COVER SHALL BE 36" MIN.
* FOR STORM DRAIN AND SANITARY SEWER PIPES, SEE PLAN.

1 PIPE BEDDING AND TRENCH DETAIL

C403 REF. SCALE: N.T.S.

IDENTIFICATION STAMP
DIV. OF THE STATE ARCHITECT
APP: 03-121324 INC:
REVIEWED FOR
SS ☐ FLS ☐ ACS ☑
DATE: 09/14/2022

OFFICE OF THE STATE FIRE MARSHAL
APPROVED FIRE AND PANIC ONLY
09/07/22
21-0233
Approval of this plan does not authorize or approve any omission or deviation from applicable regulations. Final approval is subject to field inspection. One set of approved plans shall be available on the project site at all times.

GENERAL SERVICES

Department of General Services
Architecture & Engineering Sections

State of California
Real Estate Services Division
Project Management & Development Branch

707 Third Street, Suite 4-105
West Sacramento, California 95605

REGISTERED PROFESSIONAL ENGINEER SARAH K. CURRAN CIVIL STATE OF CALIFORNIA

Issue

No.	Date	Description
1	9/2/22	

Project
SANTA MARIA FIELD OFFICE REPLACEMENT

2770 SANTA MARIA WAY
SANTA MARIA, CA 93455
SANTA BARBARA COUNTY

DEPT OF MOTOR VEHICLES

Supervisor	Designed	Drawn
S.CURRAN		A.PAWLOWSKI

DSA App No.	SFM Permit No.
03-121324	21-S-0233-CP-ER

Sheet Title
SITE DRAINAGE DETAILS

Project Number
DGS000000140725

Reference North

Sheet Scale
1" = 20'

Sheet Number
C403

© Copyright © 2020, California Department of General Services, Real Estate Services Division

CAD File: W:\1CAL01011216\ENGR\SHEETS\C403 SITE DRAINAGE DETAILS.dwg Plot Date: Aug 17, 2021 - 5:56pm Plotted by: amy.pawlowski

CONSTRUCTION NOTES

1. MAINTAIN UNDISTURBED NATIVE SOIL BENCH TO SUPPORT ADJACENT SIDEWALK/ROAD. SEQUENCE WORK TO CONSTRUCT CURBS BEFORE EXCAVATING BIORETENTION AREA FOR AGGREGATE AND BSM.
2. SCARIFY SUBGRADE BEFORE INSTALLING BIORETENTION AREA AGGREGATE AND BSM.
3. FACILITY EXCAVATION TO ALLOW FOR SPECIFIED AGGREGATE, BSM, AND MULCH DEPTHS TO ACHIEVE FINISHED ELEVATIONS ON CIVIL PLANS.
4. INSTALL UNDERDRAIN WITH HOLES FACING DOWN. TOP OF UNDERDRAIN 6" BELOW TO OF AGGREGATE LAYER. UNDERDRAIN SLOPE MAY BE FLAT.
5. PLACE BSM IN 6" LIFTS. COMPACT EACH 6" LIFT OF BSM WITH LANDSCAPE ROLLER OR BY LIGHTLY WETTING. IF WETTING, LET DRY OVERNIGHT BEFORE PLANTING.
6. DO NOT WORK WITHIN BIORETENTION AREA DURING RAIN OR UNDER WET CONDITIONS.
7. KEEP HEAVY MACHINERY OUTSIDE BIORETENTION AREA LIMITS.
8. STORMWATER SHOULD BE DIRECTED AWAY FROM BIORETENTION UNTIL CONSTRUCTION IS COMPLETE AND DRAINAGE AREA VEGETATION IS STABILIZED.

DESIGN NOTES

1. BIORETENTION FACILITY DESIGN SHOULD OPTIMIZE THE FLAT BOTTOM DIMENSIONS (I.E., WIDTH, LENGTH) TO MAXIMIZE THE FUNCTIONAL AREA OF THE FACILITY.
2. CAPTURE AND CONVEY OVERFLOW TO STORM DRAIN SYSTEM. ALTERNATIVELY, CONVEY OVERFLOW TO APPROVED DISCHARGE LOCATION THROUGH OTHER OVERLAND METHODS (IE. CURB CUTS, SIDEWALK UNDERDRAIN, WEIR, ETC.).
3. PROVIDE SPOT ELEVATIONS AT INLETS AND OVERFLOW STRUCTURES ON CIVIL PLANS (FE, OE, GIE, SIE).
4. DUE TO SITE VARIABILITY, TO ENSURE THE LONG-TERM STRUCTURAL STABILITY OF THE BIORETENTION FACILITY AND ANY ADJACENT INFRASTRUCTURE CONSULT WITH A GEOTECHNICAL ENGINEER.
5. A VERTICAL LINER MAY BE USED FOR BIORETNETION FACILITIES TO PREVENT LATERAL FLOW AND TO SEPARATE THE NATIVE SOIL FROM THE BSM AND THE AGGREGATE, HOWEVER A HORIZONTAL LINER SHALL NOT BE USED.
6. DO NOT USE FILTER FABRIC BETWEEN BSM AND AGGREGATE.
7. PROVIDE CAPPED, THREADED PVC CLEANOUT FOR UNDERDRAIN, 4" MIN. DIA. WITH SWEPP BEND.
8. PROVIDE A CLEAN-OUT/OBSERVATION PORT IN EACH FACILITY.
9. ON LONGITUDINAL SLOPE, USE CHECK DAMS.
10. DEPTH OF AGGREGATE DETERMINED BY FACILITY SIZIGN. IF CALTRANS CLASS 2 PERMEABLE IS NOT AVAILABLE, SUBSTITUTE CLASS 3 PERMEABLE WITH AN OVERLYING 3" DEEP CHOKING LAYER OF EITHER CALTRANS COURSE AGGREGATE ½" (NO.4) OR ¾" X (NO.4) OPEN-GRADED AGGREGATE.
11. BIORETENTION SOIL MEDIA (BSM) SPECIFICATION PER LANDSCAPE PLANS.
12. PLANT SELECTION PER LANDSCAPE PLANS.
13. MULCH PER LANDSCAPE PLANS.
14. LOCATE ENERGY DISSIPATION AS SPECIFIED IN INLET DETAILS.
15. NATIVE SIDE SLOPE 4:1 (H:V) PREFERRED, 3:1 WITH BENCH. 6" MINIMUM SHELF WITH 2% SLOPE TOWARDS FACILITY ADJACENT TO PEDESTRIAN USE OR CURB UNLESS 4:1 SLOPE PROVIDED.
16. INCLUDE AT LEAST 1" DROP FROM CURB ABOVE MULCH LAYER.
17. AVOID DECORATIVE USE OF COBBLE THAT CAN INTERFERE WITH INFILTRATION.

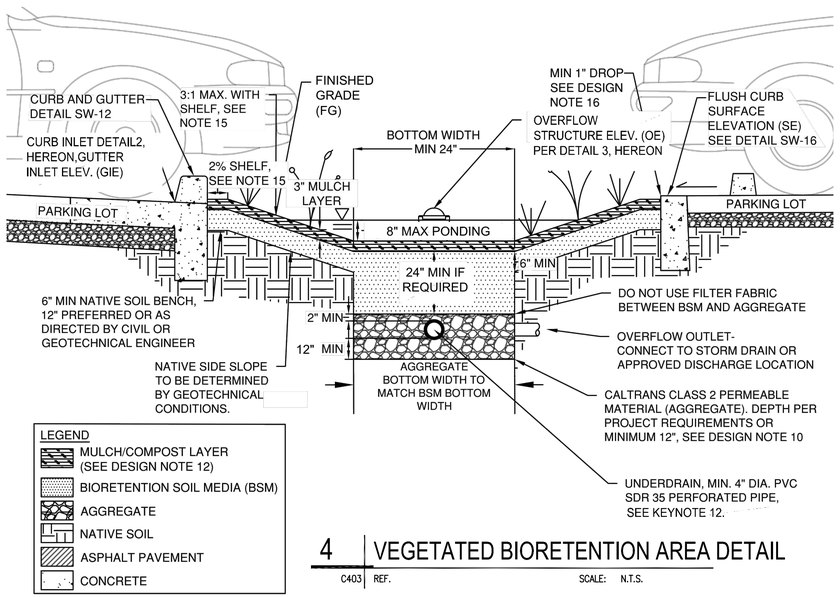

4 | VEGETATED BIORETENTION AREA DETAIL

C403 REF. SCALE: N.T.S.

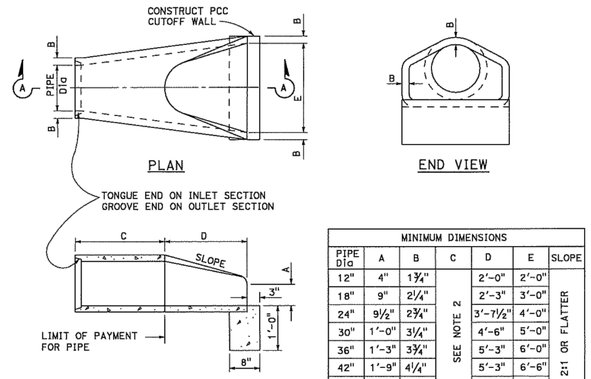

MINIMUM DIMENSIONS						
PIPE Dia	A	B	C	D	E	SLOPE
12"	4"	1¾"	SEE NOTE 2	2'-0"	2'-0"	2:1 OR FLATTER
18"	9"	2¼"		2'-3"	3'-0"	
24"	9½"	2¾"		3'-7½"	4'-0"	
30"	1'-0"	3¼"		4'-6"	5'-0"	
36"	1'-3"	3¾"		5'-3"	6'-0"	
42"	1'-9"	4¼"		5'-3"	6'-6"	
48"	2'-0"	4¾"		6'-0"	7'-0"	
54"	2'-3"	5¼"		5'-5"	7'-6"	

PRECAST CONCRETE FLARED END SECTION TYPE A

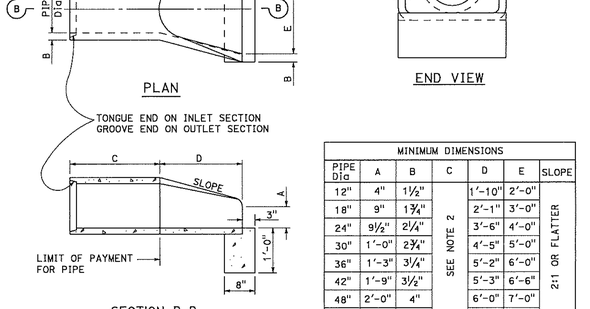

MINIMUM DIMENSIONS						
PIPE Dia	A	B	C	D	E	SLOPE
12"	4"	1½"	SEE NOTE 2	1'-10"	2'-0"	2:1 OR FLATTER
18"	9"	1¾"		2'-1"	3'-0"	
24"	9½"	2¼"		3'-6"	4'-0"	
30"	1'-0"	2¾"		4'-5"	5'-0"	
36"	1'-3"	3¼"		5'-2"	6'-0"	
42"	1'-9"	3½"		5'-3"	6'-6"	
48"	2'-0"	4"		6'-0"	7'-0"	
54"	2'-3"	4⅜"		5'-6"	6'-10"	

PRECAST CONCRETE FLARED END SECTION TYPE B

NOTES:

1. Contractor has the option of using either Type A or B precast concrete flared end section.
2. "C" dimension varies and will be paid for as concrete pipe.

1 | STORM DRAIN FLARED END SECTION

C403 REF. SCALE: N.T.S.

C.I. GRATE

C.I. FRAME EXTENSION

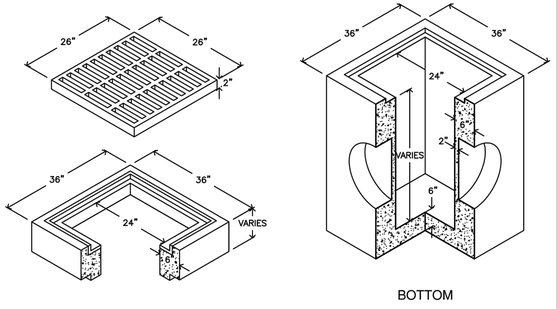

DESIGN NOTES

1. PROVIDE GRATE OVERFLOW ELEVATION ON PLANS.
2. PROVIDE EXTENSION OVERFLOW ELEVATION (COE) ON PLANS.
3. ON PRIVATE SITES NOT IN CITY RIGHT-OF-WAY THE PROJECT CIVIL ENGINEER MAY PROPOSE ALTERNATIVES FOR GRATE INSTALLATIONS USING ALTERNATIVE MANUFACTURER'S PRODUCTION/CONFIGURATION.

CONSTRUCTION NOTES

1. DO NOT ADJUST OVERFLOW GRATE ELEVATION, CONSTRUCT AS SHOWN ON PLANS.

3 | DRAIN INLET DETAIL

C403 REF. SCALE: N.T.S.

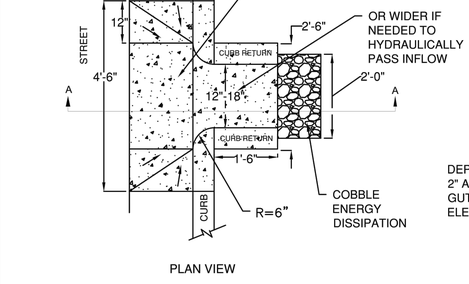

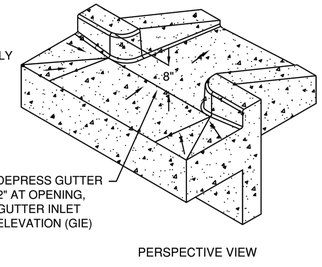

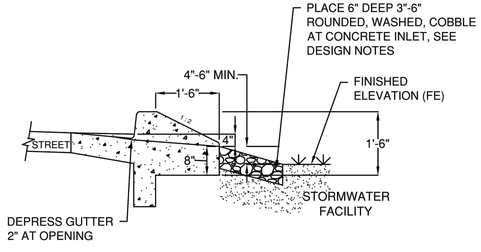

BIORETENTION DESIGN NOTES

1. FOR USE WITH STORMWATER FACILITIES WITH SIDE SLOPES.
2. PROVIDE SPOT ELEVATIONS ON PLANS (FE, OE, GIE, IE). SEE DETAIL SW-1, SW-1A, SW-3 OR SW-3A.
3. CURB AND WALL DETAILS MAY BE MODIFIED BY CIVIL AND GEOTECHNICAL ENGINEERS SUBJECT TO APPROVAL BY CITY ENGINEER.
4. WHERE INLET FLOW VELOCITY IS HIGH, EXTEND COBBLE INTO FACILITY, BUT AVOID EXCESSIVE USE.
5. CURB HEIGHT MAY BE REDUCED TO 4-INCHES WHERE ADJACENT TO A SIDEWALK. SEE DETAILS SW-12 & SW-13.

CONSTRUCTION NOTES

1. AFTER CONSTRUCTION PLACE SAND BAGS AT GUTTER OPENINGS TO KEEP STORM FLOWS FROM ENTERING FACILITY UNTIL VEGETATION IS ESTABLISHED.

2 | BIORETENTION CURB CUT INLET DETAIL

C403 REF. SCALE: N.T.S.

IDENTIFICATION STAMP
DIV. OF THE STATE ARCHITECT
APP: 03-121324 INC:
REVIEWED FOR
SS ☐ FLS ☐ ACS ☑
DATE: 09/14/2022

OFFICE OF THE STATE FIRE MARSHAL
APPROVED FIRE AND PANIC ONLY
09/07/22
21-0233
Approval of this plan does not authorize or approve any omission or deviation from applicable regulations. Final approval is subject to field inspection. One set of approved plans shall be available on the project site at all times.

DGS GENERAL SERVICES

Department of General Services
Architecture & Engineering Sections
State of California
Real Estate Services Division
Project Management & Development Branch
707 Third Street, Suite 4-105
West Sacramento, California 95605

REGISTERED PROFESSIONAL ENGINEER
GRAHAM K. CURRAN
No. 056670
CIVIL
STATE OF CALIFORNIA

Issue		
No.	Date	Description
1	9/2/22	

Project
SANTA MARIA FIELD OFFICE REPLACEMENT
2770 SANTA MARIA WAY
SANTA MARIA, CA 93455
SANTA BARBARA COUNTY
DEPT OF MOTOR VEHICLES

Supervisor	Designed	Drawn
S.CURRAN		A.PAWLOWSKI

DSA App No. 03-121324
SFM Permit No. 21-S-0233-CP-ER

Sheet Title
SITE DRAINAGE DETAILS

Project Number
DGS000000140725

Reference North
Sheet Scale 1" = 20'
Sheet Number C404

Copyright © 2020, California Department of General Services - Real Estate Services Division

CAD File: W:\1CAD\01012\ENGR\SHEETS\C404 SITE DRAINAGE DETAILS.dwg Plot Date: Aug 10, 2021 - 12:23pm Plotted by: amy.pawlowski

CMU BLOCK WALL WEST ELEVATION NOTES

1. REINFORCED CMU BLOCK WALL W/PRECAST MORTARED ARCHITECTURAL CAP – VARIES FROM 7' TO 9' TALL – MATCH BUILDING WALL BLOCK STYLE AND COLOR.
2. BLOCK WALL CONSTRUCTED ABOVE GRADE ON REINFORCED CONCRETE RETAINING WALL – VARIES 0' TO 3.5' TALL – CONCRETE FOOTING ALONG PROPERTY LINE.
3. SEE STRUCTURAL DETAIL 1/S303 FOR WALL DESIGN.
4. SEE CALTRANS STANDARD PLAN B0–3, DETAIL 3–1 FOR WALL DRAINAGE AND 3–2 FOR EXPANSION AND WEAKENED PLANE JOINTS, AND B3–7C FOR STEP FOOTING,
5. DO NOT DISTURB GRADE BEYOND PROPERTY LINE.

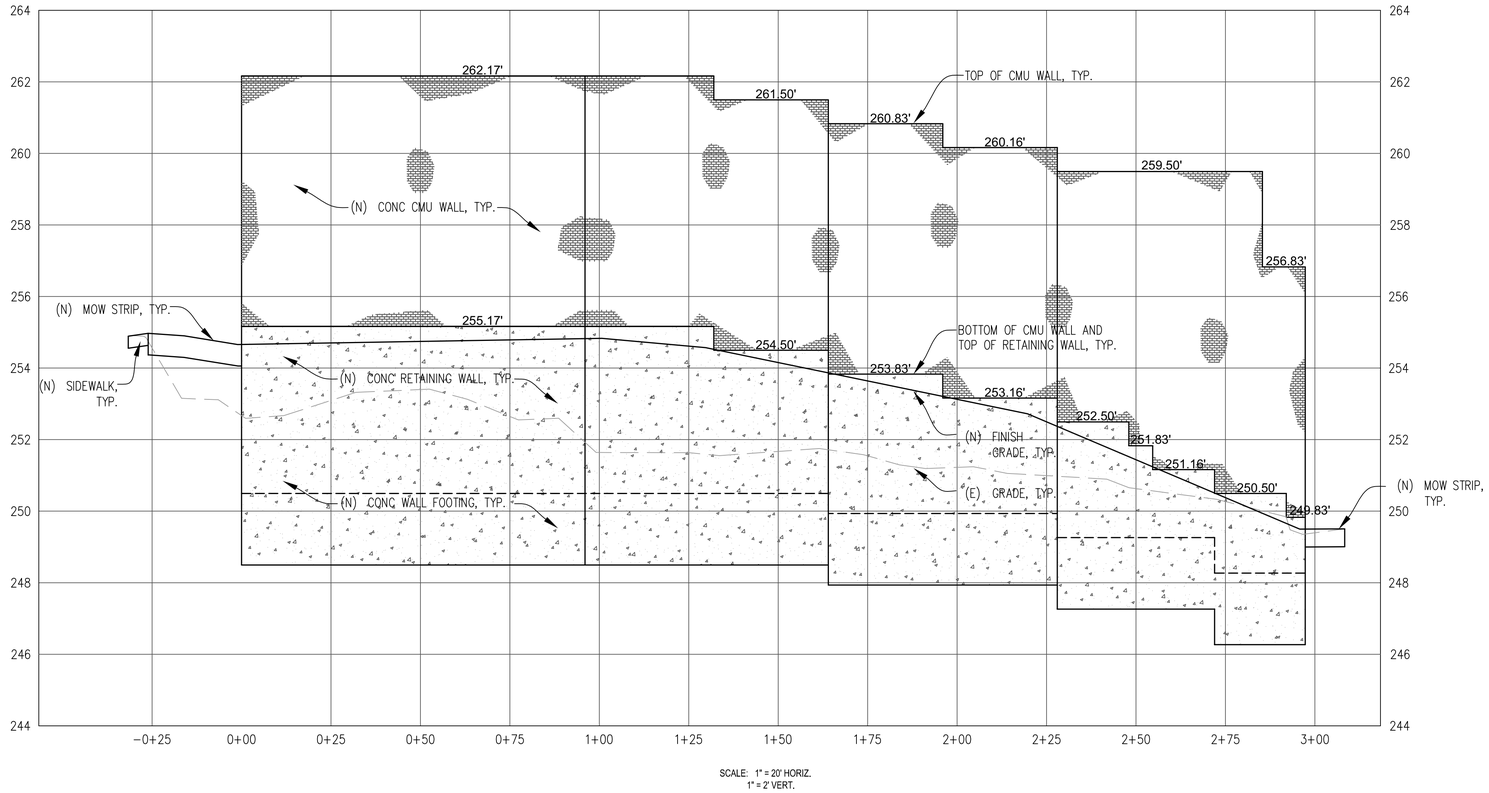

SCALE: 1" = 20' HORIZ.
1" = 2' VERT.

CMU BLOCK WALL ALONG EAST PROPERTY LINE

IDENTIFICATION STAMP
DIV. OF THE STATE ARCHITECT
APP: 03-121324 INC: A
REVIEWED FOR
SS ☐ FLS ☐ ACS ☑
DATE: 09/14/2022

OFFICE OF THE STATE FIRE MARSHAL
APPROVED FIRE AND PANIC ONLY
09/07/22
21-0233
Approval of this plan does not authorize or approve any omission or deviation from applicable regulations. Final approval is subject to field inspection. One set of approved plans shall be available on the project site at all times.

DGS GENERAL SERVICES

Department of General Services
Architecture & Engineering Sections
State of California
Real Estate Services Division
Project Management & Development Branch
707 Third Street, Suite 4-105
West Sacramento, California 95605

REGISTERED PROFESSIONAL ENGINEER
Scott C. McDonell
No. C-62154
CIVIL
STATE OF CALIFORNIA
7/11/22

DMV
State of California
Department of Motor Vehicles

Issue

No.	Date	Description
1	9/2/22	

Project
SANTA MARIA FIELD OFFICE REPLACEMENT
2770 SANTA MARIA WAY
SANTA MARIA, CA 93455
SANTA BARBARA COUNTY

DEPT OF MOTOR VEHICLES

Supervisor	Designed	Drawn
E. VELAGIC	S. MCDONELL	S. MCDONELL

DSA App No.	SFM Permit No.
03-121324	21-S-0233-CP-ER

Sheet Title
CIVIL
CMU BLOCK WALL
WEST SECTION VIEW

Project Number
DGS000000140725

Reference North

Sheet Scale
1" = 20'-0"

Sheet Number
C501

Copyright © 2022, California Department of General Services - Real Estate Services Division

CAD File: X:\Projects\14xxxx\140725\DWG\PLTC501.dwg Plot Date: Jul 11, 2022 - 2:16pm Plotted by: SMcDonel

RELATIVE BORDER SCALE IN INCHES 0 1 2 3

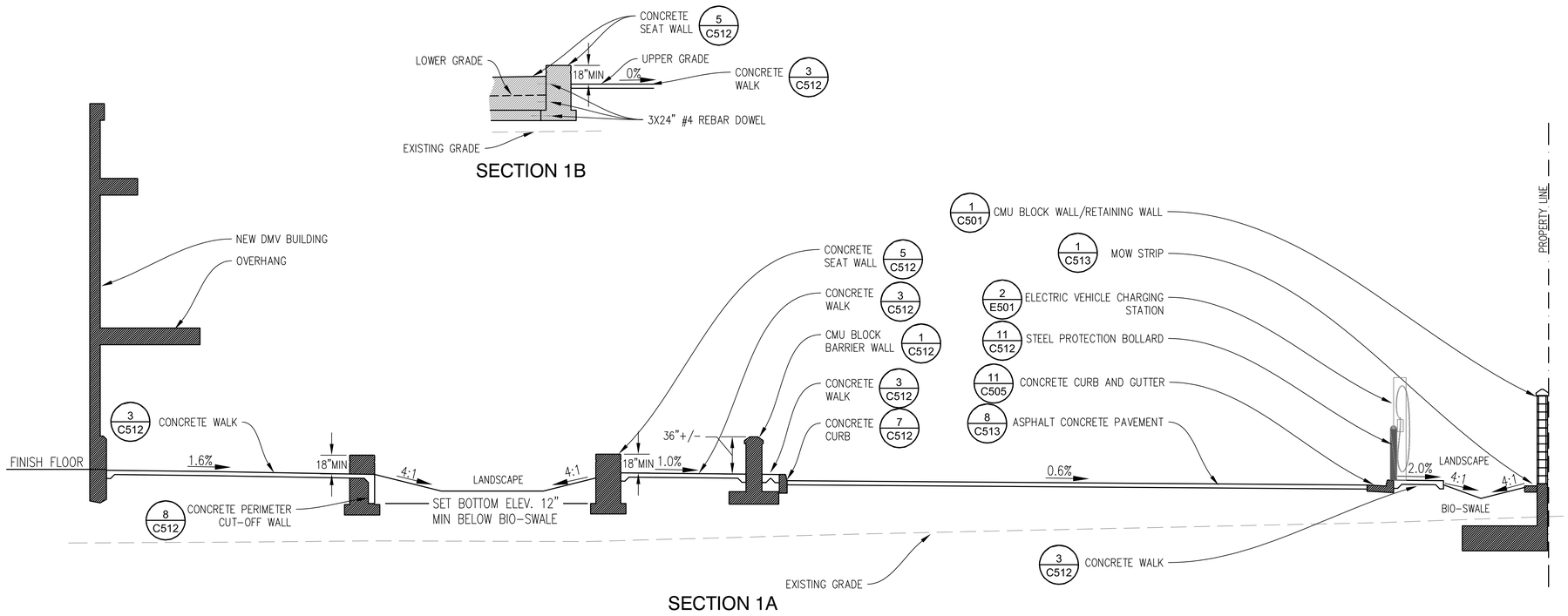

SECTION 1B

SECTION 1A

X01_XX01

1 TYPICAL SECTION — 1"=5'

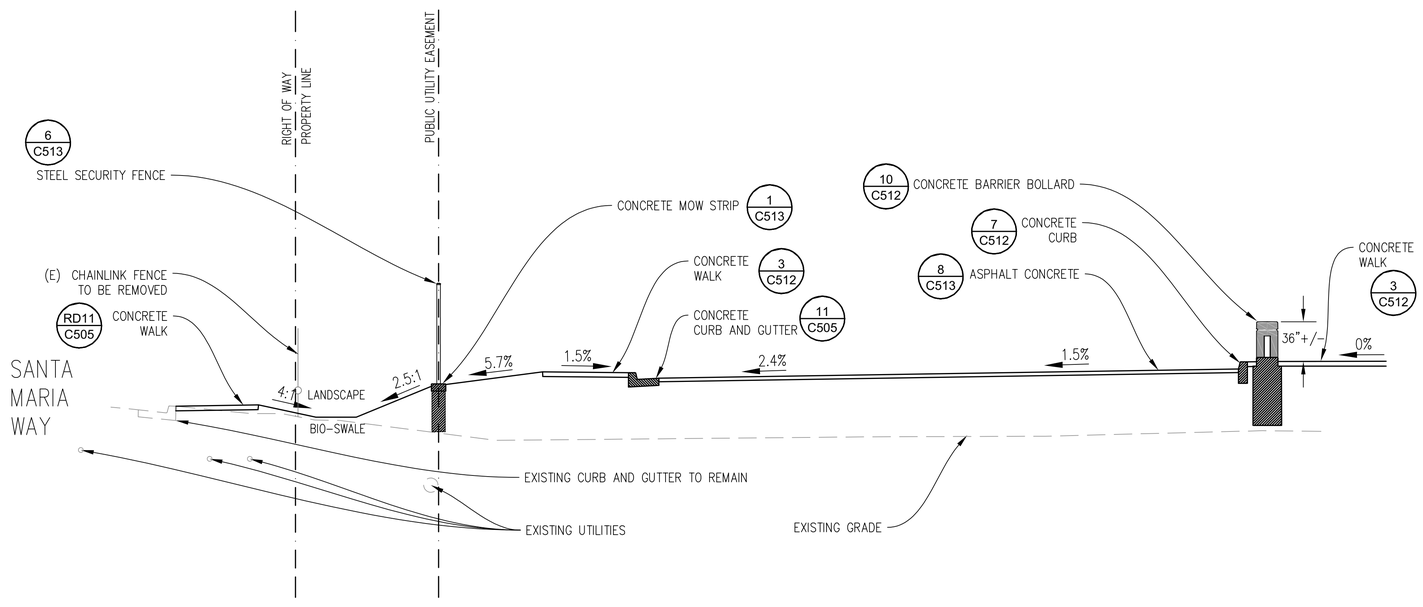

X01_XX01

3 TYPICAL SECTION — 1"=5'

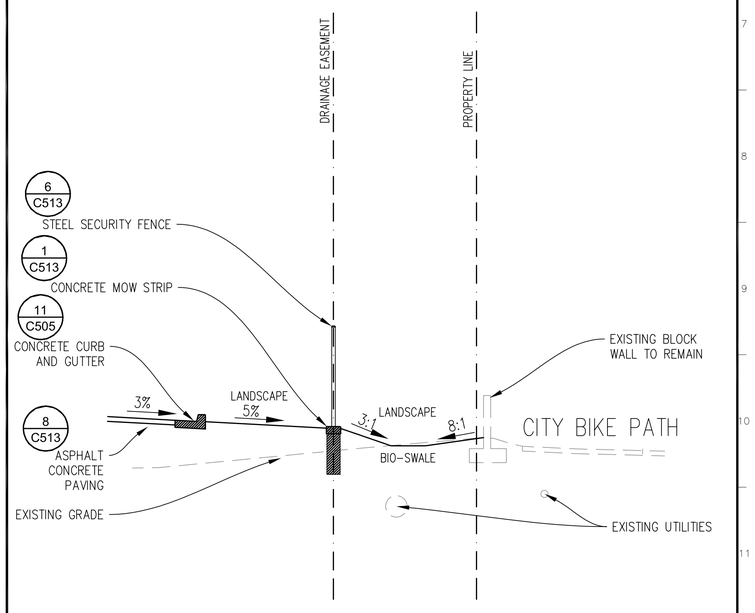

X01_XX01

2 TYPICAL SECTION — 1"=5'

IDENTIFICATION STAMP
DIV. OF THE STATE ARCHITECT
APP: 03-121324 INC:
REVIEWED FOR
SS ☐ FLS ☐ ACS ☑
DATE: 09/14/2022

OFFICE OF THE STATE FIRE MARSHAL
APPROVED FIRE AND PANIC ONLY
09/07/22
21-0233
Approval of this plan does not authorize or approve any omission or deviation from applicable regulations. Final approval is subject to field inspection. One set of approved plans shall be available on the project site at all times.

DGS GENERAL SERVICES
Department of General Services
Architecture & Engineering Sections
State of California
Real Estate Services Division
Project Management & Development Branch
707 Third Street, Suite 4-105
West Sacramento, California 95605

REGISTERED PROFESSIONAL ENGINEER
Scott C. McDaniel
No. C-62154
CIVIL
STATE OF CALIFORNIA

DMV
State of California
Department of Motor Vehicles

Issue		
No.	Date	Description
1	9/2/22	

Project
SANTA MARIA FIELD OFFICE REPLACEMENT
2770 SANTA MARIA WAY
SANTA MARIA, CA 93455
SANTA BARBARA COUNTY

DEPT OF MOTOR VEHICLES

Supervisor	Designed	Drawn
E. VELAGIC	S. MCDONELL	S. MCDONELL

DSA App No.	SFM Permit No.
03-121324	21-S-0233-CP-ER

Sheet Title
CIVIL
TYPICAL
SECTIONS

Project Number
DGS000000140725

Reference North | Sheet Scale 1"=5' | Sheet Number C502

Copyright © 2022, California Department of General Services - Real Estate Services Division

CAD File: X:\Projects\14xxxx\140725\DWG\PLT\C502.dwg Plot Date: Jun 22, 2022 - 3:11pm Plotted by: SMcDonel

RELATIVE BORDER SCALE IN INCHES 0 1 2 3

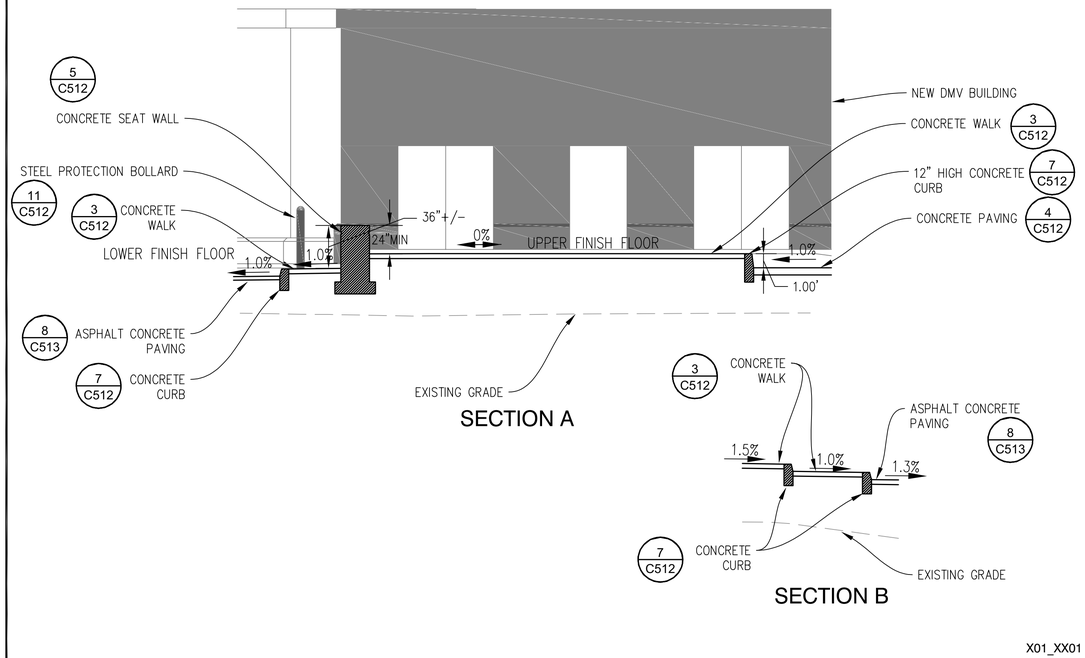

X01_XX01

1 TYPICAL SECTION — 1"=5'

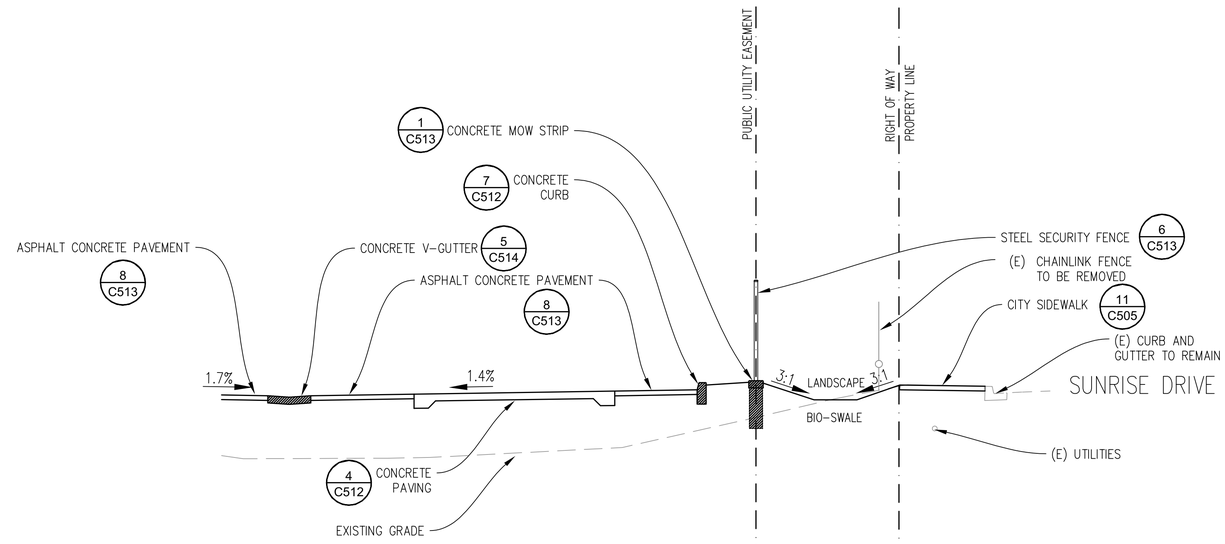

X01_XX01

2 TYPICAL SECTION — 1"=5'

IDENTIFICATION STAMP
DIV. OF THE STATE ARCHITECT
APP: 03-121324 INC:
REVIEWED FOR
SS ☐ FLS ☐ ACS ☑
DATE: 09/14/2022

OFFICE OF THE STATE FIRE MARSHAL
APPROVED FIRE AND PANIC ONLY
09/07/22
21-0233
Approval of this plan does not authorize or approve any omission or deviation from applicable regulations. Final approval is subject to field inspection. One set of approved plans shall be available on the project site at all times.

DGS GENERAL SERVICES
Department of General Services
Architecture & Engineering Sections
State of California
Real Estate Services Division
Project Management & Development Branch
707 Third Street, Suite 4-105
West Sacramento, California 95605

REGISTERED PROFESSIONAL ENGINEER
Scott C. McDonell
No. C-62154
CIVIL
STATE OF CALIFORNIA
7/11/22

DMV
State of California
Department of Motor Vehicles

Issue

No.	Date	Description
1	9/2/22	

Project
SANTA MARIA FIELD OFFICE REPLACEMENT

2770 SANTA MARIA WAY
SANTA MARIA, CA 93455
SANTA BARBARA COUNTY

DEPT OF MOTOR VEHICLES

Supervisor	Designed	Drawn
E. VALAGIC	S. MCDONELL	S. MCDONELL

DSA App No.	SFM Permit No.
03-121324	21-S-0233-CP-ER

Sheet Title
CIVIL
TYPICAL
SECTIONS

Project Number
DGS000000140725

Reference North | Sheet Scale 1" = 5'-0" | Sheet Number C503

Copyright © 2022, California Department of General Services - Real Estate Services Division

CAD File: X:\Projects\14xxxx\140725\DWG\PLT\C503.dwg Plot Date: Jul 11, 2022 - 2:20pm Plotted by: SMcDonel

RELATIVE BORDER SCALE IN INCHES 0 1 2 3

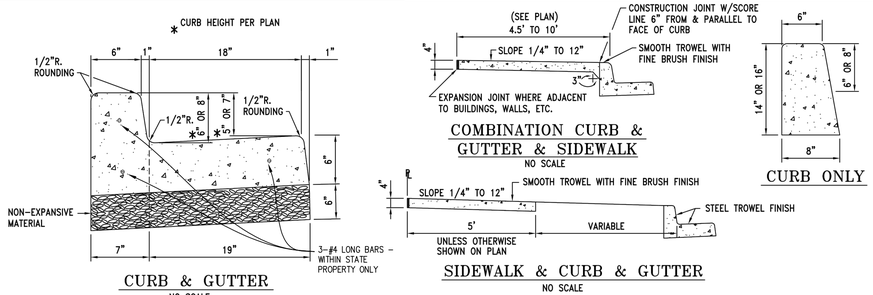

CURB & GUTTER

NO SCALE

COMBINATION CURB & GUTTER & SIDEWALK

NO SCALE

CURB ONLY

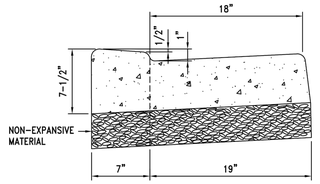

DEPRESSED CURB DETAIL

NO SCALE

GENERAL NOTES:

1. WORKMANSHIP AND MATERIALS SHALL COMPLY WITH CITY SPECIFICATION FOR CONCRETE CURB, GUTTER AND SIDEWALK.
2. CURING-USE APPROVED CURING COMPOUND.
3. EXPANSION JOINTS-3/8" FULL DEPTH PREMOLDED ASPHALTIC IMPREGNATED, EVENLY SPACED, NOT OVER 30' APART AT ALL CURB RETURNS, DRIVEWAY APRONS AND EXISTING WORK.
4. COLORING-USE 1 1/2 LBS. LAMPBLACK PER C.Y., INTEGRALLY MIXED.
5. FINISH-ALL EDGES, CORNERS AND ENDS SHALL HAVE 1/2" RADII.
6. SCORING-SEE STD. SPEC. FOR CONCRETE CURB, GUTTER AND SIDEWALK.
7. COMPACTION-RELATIVE DENSITY OF 90% UNDER SIDEWALKS. UNDER CURBS, GUTTERS AND DRIVEWAYS, 95%.
8. FOR ESTIMATING, 8" C.F. = 19 1/2 L.F./C.Y. CONCRETE AND 6" C.F. = 20 3/4 L.F./C.Y. CONCRETE.

RICHARD G. SWEET R.C.E. 44,213 EXP. 6/30/07 — 11/22/04

REVISIONS	BY	APP	DATE

City of Santa Maria Standard Drawing

DESCRIPTION: CURB and GUTTER and/or SIDEWALK

STANDARD NUMBER RD-11

DRAWN BY: N.S.C. | DATE DRAWN: 2/68 | SCALE: NONE | SHEET 1 OF 1

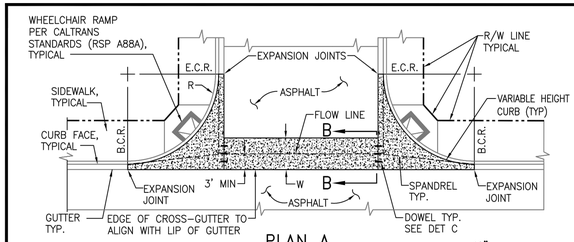

PLAN A

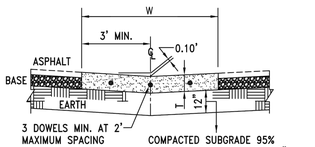

SECTION B-B

GENERAL NOTES

1. WORKMANSHIP AND MATERIALS SHALL COMPLY WITH CITY SPECIFICATIONS FOR MATERIALS AND THE CONSTRUCTION OF CONCRETE CURBS, GUTTERS, SIDEWALKS, AND DRIVEWAYS.
2. SUBGRADE COMPACTION - 95% AS MEASURED BY CALIFORNIA TEST METHOD 216 OR BY CALIBRATED NUCLEAR DENSITY INSTRUMENT.
3. SEE TABLE FOR VALUES OF GUTTER/SPANDREL THICKNESS (T), WIDTH (W), AND CURB RETURN RADIUS (R).
4. AT-GRADE DRIVE APPROACH SHALL HAVE A MINIMUM THROAT WIDTH OF TWENTY-FOUR (24) FEET.
5. EDGE OF DRIVEWAY SHALL BE SPACED A MINIMUM OF FIVE (5) FEET FROM ANY ABOVE-GROUND UTILITY SUCH AS STREET LIGHTS, FIRE HYDRANTS, METERS, OR UTILITY VAULTS, AND A MINIMUM OF TEN (10) FEET FROM ANY STREET TREES.
6. DRIVEWAYS ON THE SAME PARCEL SHALL BE SEPARATED BY A MINIMUM OF TWENTY (20) FEET.
7. AGGREGATE WIDTH OF ALL DRIVEWAYS ON THE SAME PARCEL SHALL NOT EXCEED FIFTY (50) PERCENT OF THE PARCEL'S FRONTAGE ALONG THE STREET.

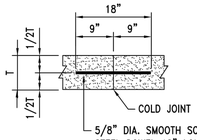

DETAIL C

STREET DESIGNATION	T (MIN.)	W (MIN.)	R (MIN.)
PRIMARY ARTERIAL	8"	12'	35'
SECONDARY ARTERIAL	8"	12'	35'
COLLECTOR	6"	8'	27'
LOCAL	6"	6'	27'
MINOR	6"	6'	27'
DRIVEWAY	6"	6'	15'

⚠A GENERAL NOTES 4, 5, 6, AND 7 ADDED

RICHARD G. SWEET R.C.E. 44,213 EXP. 6/30/07 — 3/17/05

REVISIONS	BY	APP	DATE
A Public Works Revisions	JAS		7/19

City of Santa Maria Standard Drawing

DESCRIPTION: CROSS GUTTER AND SPANDREL

STANDARD NUMBER RD-18A

DRAWN BY: J.H. | DATE DRAWN: 10/02 | SCALE: NONE | SHEET 1 OF 1

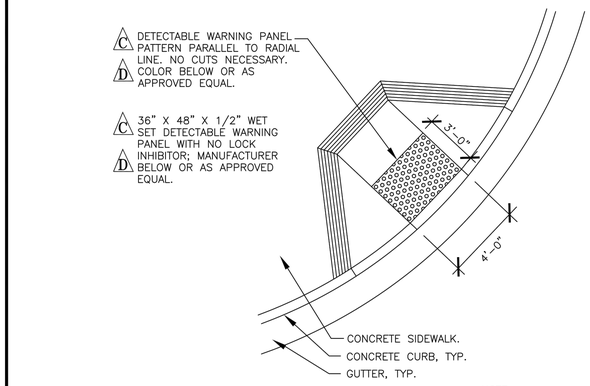

ⒷB NOTE REMOVED.

NOTE:
THIS DETAIL APPLICABLE TO THE DETECTABLE WARNING SURFACE PORTION OF CURB RAMPS. ALL OTHER ASPECTS SHALL BE PER CALTRANS RSP A88A, DATED 3/12/04.

ⒹD

MANUFACTURER	COLOR
ARMOR CAST	INDIANA BRICK RED
ACCESS TILE	BRICK RED

RICHARD G. SWEET R.C.E. 44,213 EXP. 6/30/07 — 7/18/06

REVISIONS	BY	APP	DATE
A ALT. PAVER	JH		2/07
B DETECTABLE PANEL	CP		6/08
C DETECTABLE PANEL (DP)	CP		6/10
D COLOR/MNFR DP	CP		8/11

City of Santa Maria Standard Drawing

DESCRIPTION: CURB RAMP DETECTABLE WARNING SURFACE

STANDARD NUMBER RD-10D

DRAWN BY: BFGC | DATE DRAWN: 6/05 | SCALE: NONE | SHEET 1 OF 1

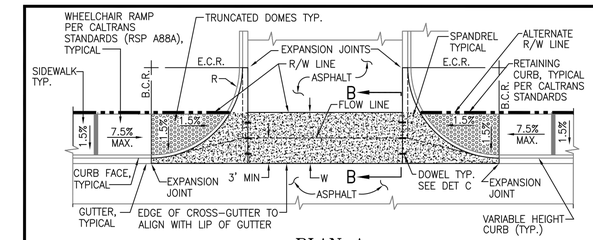

PLAN A

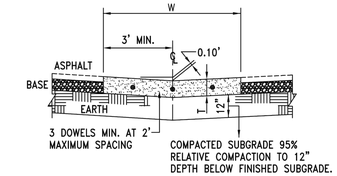

SECTION B-B

GENERAL NOTES

1. WORKMANSHIP AND MATERIALS SHALL COMPLY WITH CITY SPECIFICATIONS FOR MATERIALS AND THE CONSTRUCTION OF CONCRETE CURBS, GUTTERS, SIDEWALKS, AND DRIVEWAYS.
2. SUBGRADE COMPACTION - 95% AS MEASURED BY CALIFORNIA TEST METHOD 216 OR BY CALIBRATED NUCLEAR DENSITY INSTRUMENT.
3. SEE TABLE FOR VALUES OF GUTTER/SPANDREL THICKNESS (T), WIDTH (W), AND CURB RETURN RADIUS (R).
4. AT-GRADE DRIVE APPROACH SHALL HAVE A MINIMUM THROAT WIDTH OF TWENTY-FOUR (24) FEET.
5. EDGE OF DRIVEWAY SHALL BE SPACED A MINIMUM OF FIVE (5) FEET FROM ANY ABOVE-GROUND UTILITY SUCH AS STREET LIGHTS, FIRE HYDRANTS, METERS, OR UTILITY VAULTS, AND A MINIMUM OF TEN (10) FEET FROM ANY STREET TREES.
6. DRIVEWAYS ON THE SAME PARCEL SHALL BE SEPARATED BY A MINIMUM OF TWENTY (20) FEET.
7. AGGREGATE WIDTH OF ALL DRIVEWAYS ON THE SAME PARCEL SHALL NOT EXCEED FIFTY (50) PERCENT OF THE PARCEL'S FRONTAGE ALONG THE STREET.

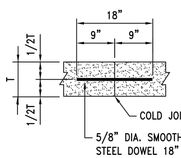

DETAIL C

STREET DESIGNATION	T (MIN.)	W (MIN.)	R (MIN.)
PRIMARY ARTERIAL	8"	12'	35'
SECONDARY ARTERIAL	8"	12'	35'
COLLECTOR	6"	8'	27'
LOCAL	6"	6'	27'
MINOR	6"	6'	27'
DRIVEWAY	6"	6'	15'

⚠A GENERAL NOTES 4, 5, 6, AND 7 ADDED

RICHARD G. SWEET R.C.E. 44,213 EXP. 6/30/07 — 3/17/05

REVISIONS	BY	APP	DATE
A Public Works Revisions	JAS		7/19

City of Santa Maria Standard Drawing

DESCRIPTION: CROSS GUTTER AND SPANDREL (ALT. R/W LINE)

STANDARD NUMBER RD-19A

DRAWN BY: J.H. | DATE DRAWN: 10/02 | SCALE: NONE | SHEET 1 OF 1

IDENTIFICATION STAMP
DIV. OF THE STATE ARCHITECT
APP: 03-121324 INC: A
REVIEWED FOR
SS ☐ FLS ☐ ACS ☑
DATE: 09/14/2022

OFFICE OF THE STATE FIRE MARSHAL
APPROVED FIRE AND PANIC ONLY
09/07/22
21-0233
Approval of this plan does not authorize or approve any omission or deviation from applicable regulations. Final approval is subject to field inspection. One set of approved plans shall be available on the project site at all times.

DGS GENERAL SERVICES

Department of General Services
Architecture & Engineering Sections
State of California
Real Estate Services Division
Project Management & Development Branch
707 Third Street, Suite 4-105
West Sacramento, California 95605

REGISTERED PROFESSIONAL ENGINEER
Scott C. McDonell
No. C-62154
CIVIL
STATE OF CALIFORNIA
7/11/22

DMV
State of California
Department of Motor Vehicles

Issue

No.	Date	Description
1	9/2/22	

Project
SANTA MARIA FIELD OFFICE REPLACEMENT
2770 SANTA MARIA WAY
SANTA MARIA, CA 93455
SANTA BARBARA COUNTY
DEPT OF MOTOR VEHICLES

Supervisor	Designed	Drawn
E. VELAGIC	S. MCDONELL	S. MCDONELL

DSA App No. 03-121324
SFM Permit No. 21-S-0233-CP-ER

Sheet Title
CIVIL CITY PAVEMENT DETAILS

Project Number
DGS000000140725

Reference North

Sheet Scale
AS NOTED

Sheet Number
C505

Copyright © 2022, California Department of General Services - Real Estate Services Division

CAD File: X:\Projects\14xxxx\140725\DWG\PLTC505.dwg Plot Date: Jul 11, 2022 - 2:24pm Plotted by: SMcDonel

24 X 36

RELATIVE BORDER SCALE IN INCHES 0 1 2 3

IDENTIFICATION STAMP
DIV. OF THE STATE ARCHITECT
APP: 03-121324 INC:
REVIEWED FOR
SS ☐ FLS ☐ ACS ☑
DATE: 09/14/2022

OFFICE OF THE STATE FIRE MARSHAL
APPROVED FIRE AND PANIC ONLY
09/07/22
21-0233
Approval of this plan does not authorize or approve any omission or deviation from applicable regulations. Final approval is subject to field inspection. One set of approved plans shall be available on the project site at all times.

DGS GENERAL SERVICES
Department of General Services
Architecture & Engineering Sections
State of California
Real Estate Services Division
Project Management & Development Branch
707 Third Street, Suite 4-105
West Sacramento, California 95605

REGISTERED PROFESSIONAL ENGINEER
Scott C. McDonell
No. C-62154
CIVIL
STATE OF CALIFORNIA
7/11/22

DMV
State of California
Department of Motor Vehicles

Issue		
No.	Date	Description
1	9/2/22	

Project
SANTA MARIA FIELD OFFICE REPLACEMENT

2770 SANTA MARIA WAY
SANTA MARIA, CA 93455
SANTA BARBARA COUNTY

DEPT OF MOTOR VEHICLES

Supervisor	Designed	Drawn
E. VELAGIC	S. MCDONELL	S. MCDONELL

DSA App No. 03-121324 | SFM Permit No. 21-S-0233-CP-ER

Sheet Title
CIVIL CITY PAVEMENT DETAILS

Project Number
DGS000000140725

Reference North | Sheet Scale AS NOTED | Sheet Number C506

Copyright © 2022, California Department of General Services - Real Estate Services Division

2018 STANDARD PLAN A85A

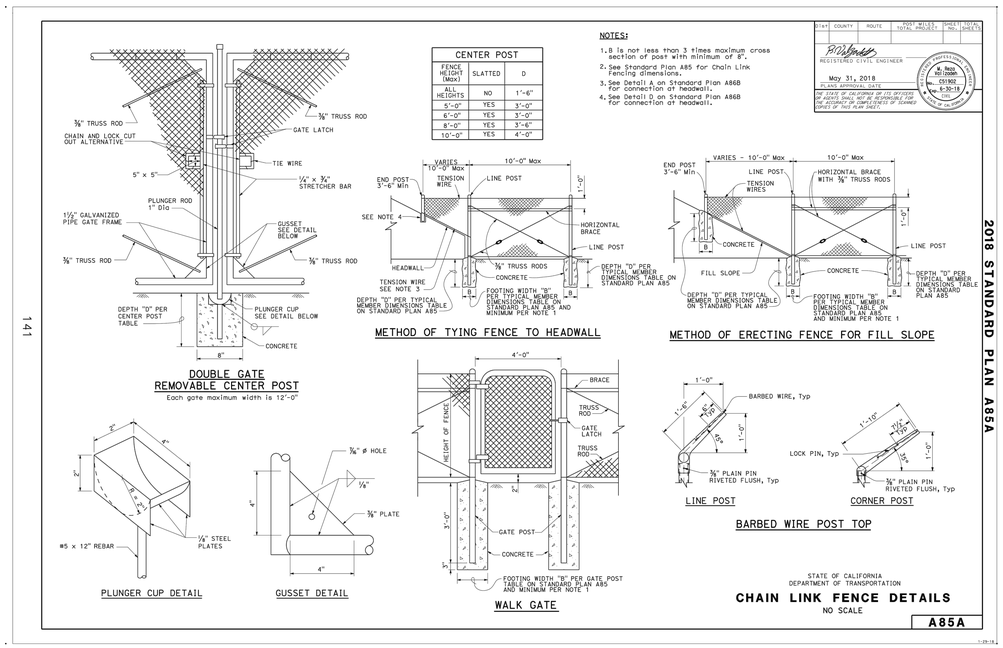

CENTER POST		
FENCE HEIGHT (Max)	SLATTED	D
ALL HEIGHTS	NO	1'-6"
5'-0"	YES	3'-0"
6'-0"	YES	3'-0"
8'-0"	YES	3'-6"
10'-0"	YES	4'-0"

NOTES:
1. B is not less than 3 times maximum cross section of post with minimum of 8".
2. See Standard Plan A85 for Chain Link Fencing dimensions.
3. See Detail A on Standard Plan A86B for connection at headwall.
4. See Detail D on Standard Plan A86B for connection at headwall.

REGISTERED CIVIL ENGINEER — May 31, 2018 — PLANS APPROVAL DATE
THE STATE OF CALIFORNIA OR ITS OFFICERS OR AGENTS SHALL NOT BE RESPONSIBLE FOR THE ACCURACY OR COMPLETENESS OF SCANNED COPIES OF THIS PLAN SHEET.

2018 STANDARD PLAN A85

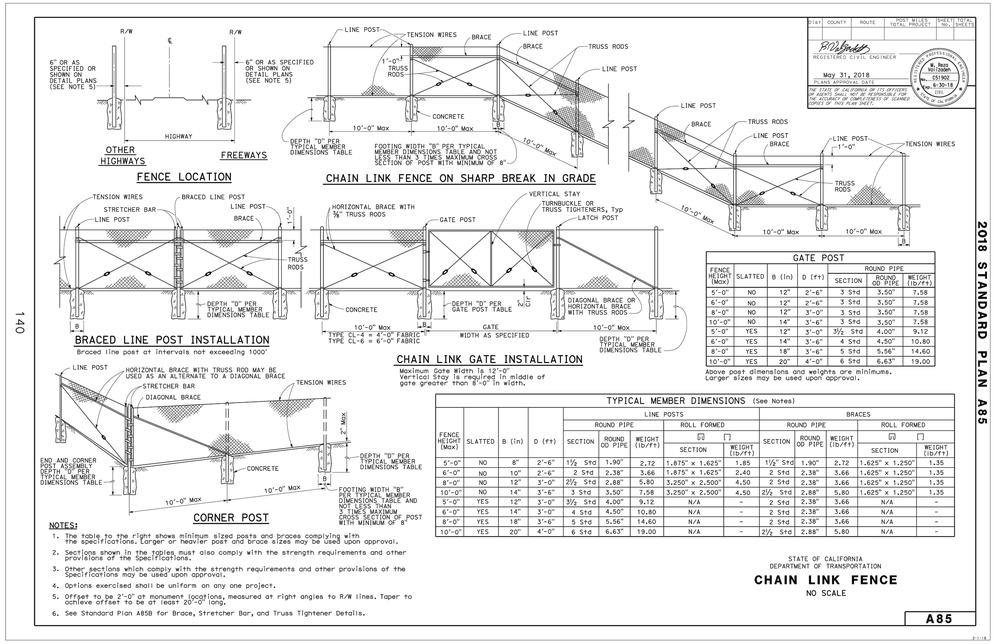

GATE POST					
FENCE HEIGHT (Max)	SLATTED	B (in)	D (ft)	ROUND PIPE SECTION	ROUND PIPE OD PIPE	ROUND PIPE WEIGHT (lb/ft)
5'-0"	NO	12"	2'-6"	3 Std	3.50"	7.58
6'-0"	NO	12"	2'-6"	3 Std	3.50"	7.58
8'-0"	NO	12"	3'-0"	3 Std	3.50"	7.58
10'-0"	NO	14"	3'-6"	3 Std	3.50"	7.58
5'-0"	YES	12"	3'-0"	3½ Std	4.00"	9.12
6'-0"	YES	14"	3'-6"	4 Std	4.50"	10.80
8'-0"	YES	18"	3'-6"	5 Std	5.56"	14.60
10'-0"	YES	20"	4'-0"	6 Std	6.63"	19.00

Above post dimensions and weights are minimums. Larger sizes may be used upon approval.

TYPICAL MEMBER DIMENSIONS (See Notes)													
				LINE POSTS					BRACES				
				ROUND PIPE		ROLL FORMED			ROUND PIPE			ROLL FORMED	
FENCE HEIGHT (Max)	SLATTED	B (in)	D (ft)	SECTION	ROUND OD PIPE	WEIGHT (lb/ft)	SECTION	WEIGHT (lb/ft)	SECTION	ROUND OD PIPE	WEIGHT (lb/ft)	SECTION	WEIGHT (lb/ft)
5'-0"	NO	8"	2'-6"	1½ Std	1.90"	2.72	1.875" x 1.625"	1.85	1½" Std	1.90"	2.72	1.625" x 1.250"	1.35
6'-0"	NO	10"	2'-6"	2 Std	2.38"	3.66	1.875" x 1.625"	2.40	2 Std	2.38"	3.66	1.625" x 1.250"	1.35
8'-0"	NO	12"	3'-0"	2½ Std	2.88"	5.80	3.250" x 2.500"	4.50	2 Std	2.38"	3.66	1.625" x 1.250"	1.35
10'-0"	NO	14"	3'-6"	3 Std	3.50"	7.58	3.250" x 2.500"	4.50	2½ Std	2.88"	5.80	1.625" x 1.250"	1.35
5'-0"	YES	12"	3'-0"	3½ Std	4.00"	9.12	N/A	-	2 Std	2.38"	3.66	N/A	-
6'-0"	YES	14"	3'-0"	4 Std	4.50"	10.80	N/A	-	2 Std	2.38"	3.66	N/A	-
8'-0"	YES	18"	3'-6"	5 Std	5.56"	14.60	N/A	-	2 Std	2.38"	3.66	N/A	-
10'-0"	YES	20"	4'-0"	6 Std	6.63"	19.00	N/A	-	2½ Std	2.88"	5.80	N/A	-

NOTES:
1. The table to the right shows minimum sized posts and braces complying with the specifications. Larger or heavier post and brace sizes may be used upon approval.
2. Sections shown in the tables must also comply with the strength requirements and other provisions of the specifications.
3. Other sections which comply with the strength requirements and other provisions of the specifications may be used upon approval.
4. Options exercised shall be uniform on any one project.
5. Offset to be 2'-0" at monument locations, measured at right angles to R/W lines. Taper to achieve offset to be at least 20'-0" long.
6. See Standard Plan A85B for Brace, Stretcher Bar, and Truss Tightener Details.

STATE OF CALIFORNIA
DEPARTMENT OF TRANSPORTATION
CHAIN LINK FENCE
NO SCALE
A85

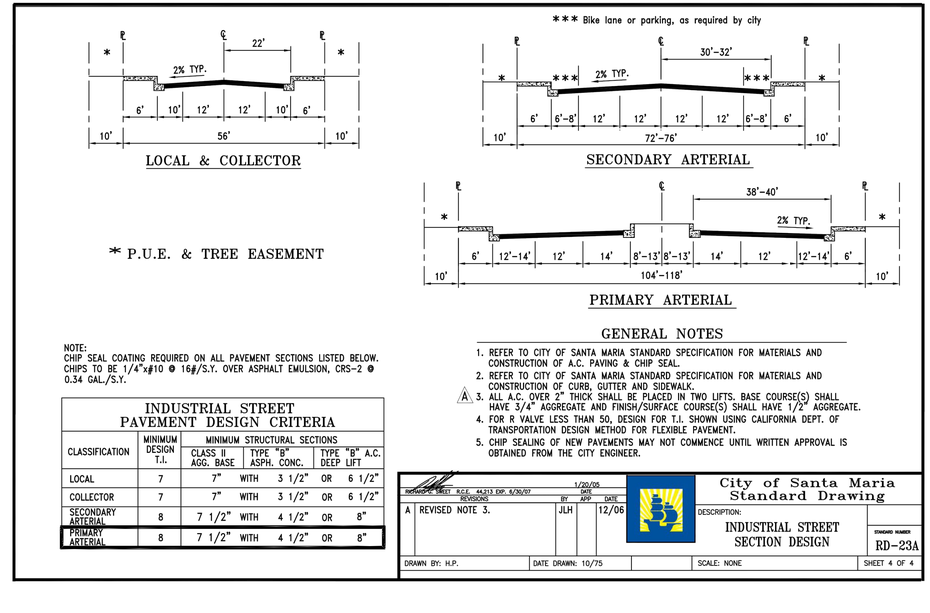

NOTE:
CHIP SEAL COATING REQUIRED ON ALL PAVEMENT SECTIONS LISTED BELOW. CHIPS TO BE 1/4"x#10 @ 16#/S.Y. OVER ASPHALT EMULSION, CRS-2 @ 0.34 GAL./S.Y.

INDUSTRIAL STREET PAVEMENT DESIGN CRITERIA							
CLASSIFICATION	MINIMUM DESIGN T.I.	MINIMUM STRUCTURAL SECTIONS					
		CLASS II AGG. BASE	TYPE "B" ASPH. CONC.			TYPE "B" A.C. DEEP LIFT	
LOCAL	7	7"	WITH	3 1/2"	OR	6 1/2"	
COLLECTOR	7	7"	WITH	3 1/2"	OR	6 1/2"	
SECONDARY ARTERIAL	8	7 1/2"	WITH	4 1/2"	OR	8"	
PRIMARY ARTERIAL	8	7 1/2"	WITH	4 1/2"	OR	8"	

GENERAL NOTES
1. REFER TO CITY OF SANTA MARIA STANDARD SPECIFICATION FOR MATERIALS AND CONSTRUCTION OF A.C. PAVING & CHIP SEAL.
2. REFER TO CITY OF SANTA MARIA STANDARD SPECIFICATION FOR MATERIALS AND CONSTRUCTION OF CURB, GUTTER AND SIDEWALK.
3. ALL A.C. OVER 2" THICK SHALL BE PLACED IN TWO LIFTS. BASE COURSE(S) SHALL HAVE 3/4" AGGREGATE AND FINISH/SURFACE COURSE(S) SHALL HAVE 1/2" AGGREGATE.
4. FOR R VALVE LESS THAN 50, DESIGN FOR T.I. SHOWN USING CALIFORNIA DEPT. OF TRANSPORTATION DESIGN METHOD FOR FLEXIBLE PAVEMENT.
5. CHIP SEALING OF NEW PAVEMENTS MAY NOT COMMENCE UNTIL WRITTEN APPROVAL IS OBTAINED FROM THE CITY ENGINEER.

REVISIONS	BY	APP	DATE
A REVISED NOTE 3.	JLH		12/06

RICHARD D. SWEET R.C.E. 44313 EXP. 6/30/07 — 1/20/05 DATE

City of Santa Maria
Standard Drawing

DESCRIPTION: INDUSTRIAL STREET SECTION DESIGN
STANDARD NUMBER: RD-23A

DRAWN BY: H.P. | DATE DRAWN: 10/75 | SCALE: NONE | SHEET 4 OF 4

2018 STANDARD PLAN A88A

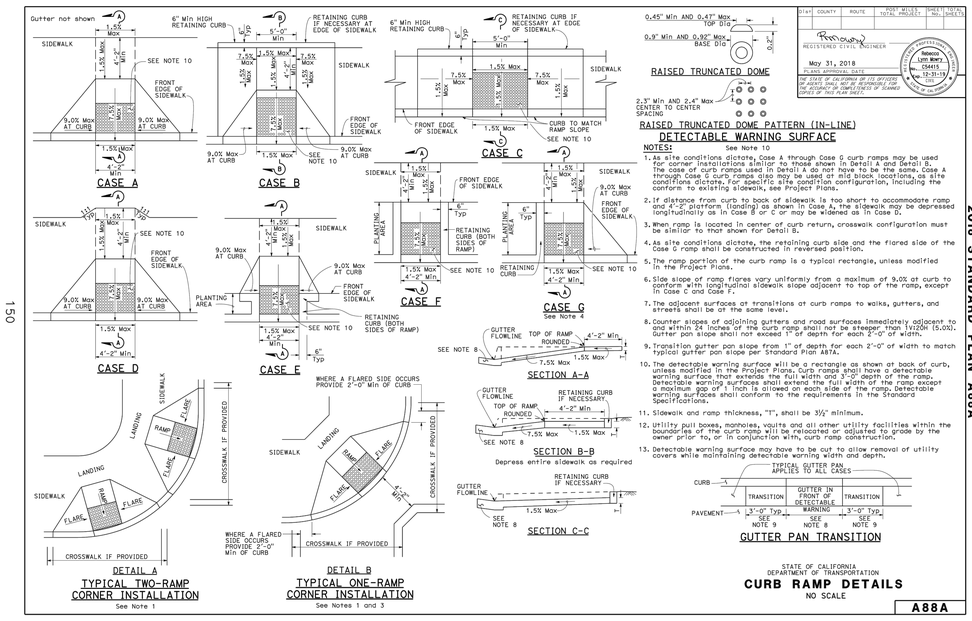

NOTES:
See Note 10
1. As site conditions dictate, Case A through Case G curb ramps may be used for corner installations similar to those shown in Detail A and Detail B. The case of curb ramps used in Detail A do not have to be the same. Case A through Case G curb ramps also may be used at mid block locations, as site conditions dictate. For specific site condition configuration, including the conform to existing sidewalk, see Project Plans.
2. If distance from curb to back of sidewalk is too short to accommodate ramp and 4'-2" platform (landing) as shown in Case A, the sidewalk may be depressed longitudinally as in Case B or C or may be widened as in Case D.
3. When ramp is located in center of curb return, crosswalk configuration must be similar to that shown for Detail B.
4. As site conditions dictate, the retaining curb side and the flared side of the Case G ramp shall be constructed in reversed position.
5. The ramp portion of the curb ramp is a typical rectangle, unless modified in the Project Plans.
6. Side slope of ramp flares vary uniformly from a maximum of 9.0% at curb to conform with longitudinal sidewalk slope adjacent to top of the ramp, except in Case C and Case F.
7. The adjacent surfaces at transitions at curb ramps to walks, gutters, and streets shall be at the same level.
8. Counter slopes of adjoining gutters and road surfaces immediately adjacent to and within 24 inches of the curb ramp shall not be steeper than 1V:20H (5.0%). Gutter pan slope shall not exceed 1" of depth for each 2'-0" of width.
9. Transition gutter pan slope from 1" of depth for each 2'-0" of width to match typical gutter pan slope per Standard Plan A87A.
10. The detectable warning surface will be a rectangle as shown at back of curb, unless modified in the Project Plans. Curb ramps shall have a detectable warning surface that extends the full width and 3'-0" depth of the ramp. Detectable warning surfaces shall extend the full width of the ramp except a maximum gap of 1 inch is allowed on each side of the ramp. Detectable warning surfaces shall conform to the requirements in the Standard Specifications.
11. Sidewalk and ramp thickness, "T", shall be 3½" minimum.
12. Utility pull boxes, manholes, vaults and all other utility facilities within the boundaries of the curb ramp will be relocated or adjusted to grade by the owner prior to, or in conjunction with, curb ramp construction.
13. Detectable warning surface may have to be cut to allow removal of utility covers while maintaining detectable warning width and depth.

STATE OF CALIFORNIA
DEPARTMENT OF TRANSPORTATION
CURB RAMP DETAILS
NO SCALE
A88A

CAD File: X:\Projects\14xxxx\140725\DWG\PLT\C506.dwg Plot Date: Jul 11, 2022 - 2:27pm Plotted by: SMcDonel

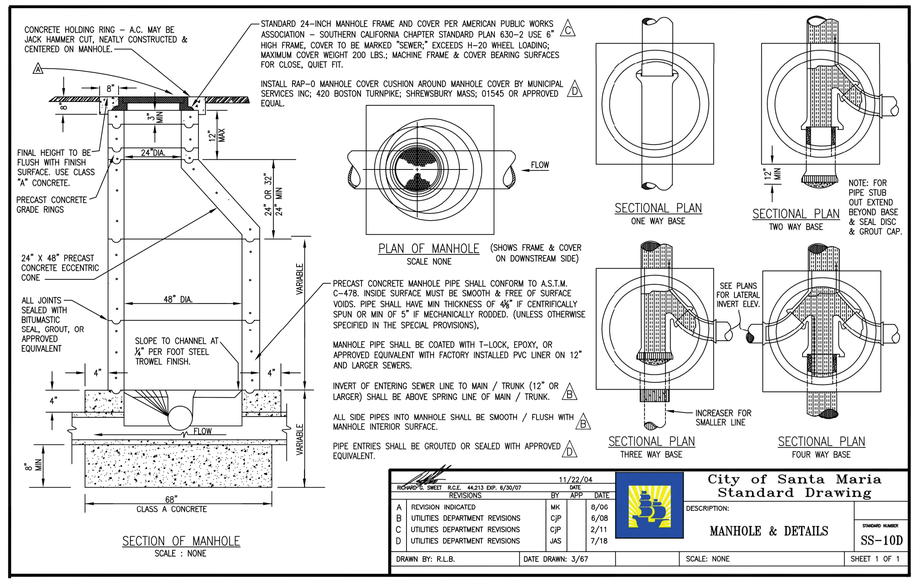

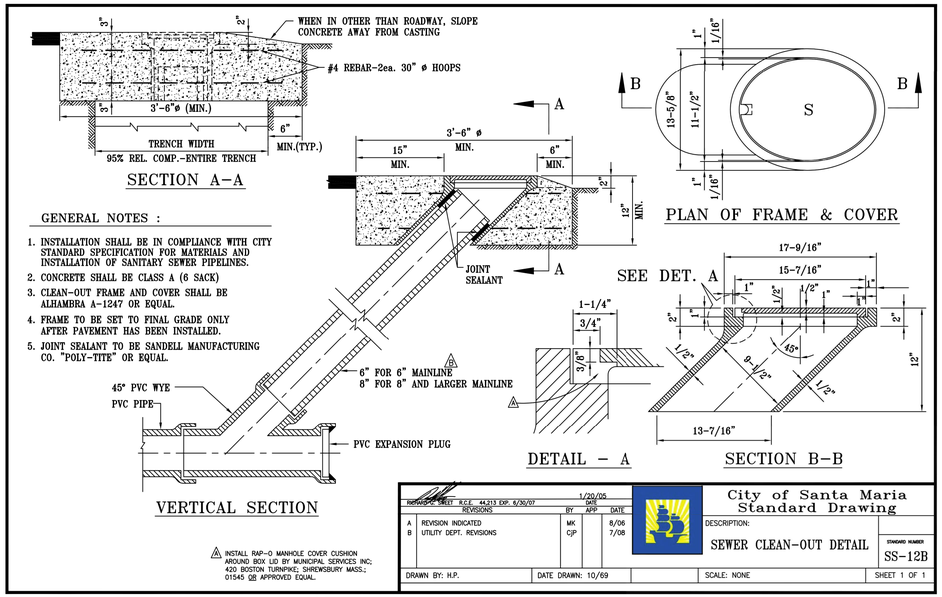

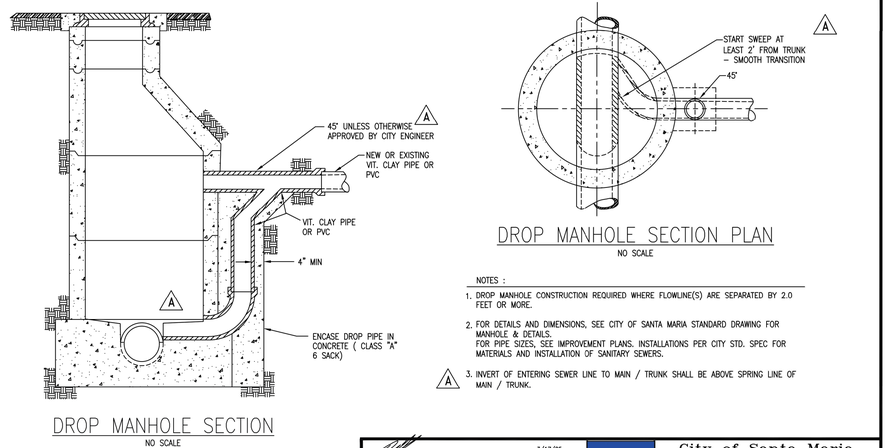

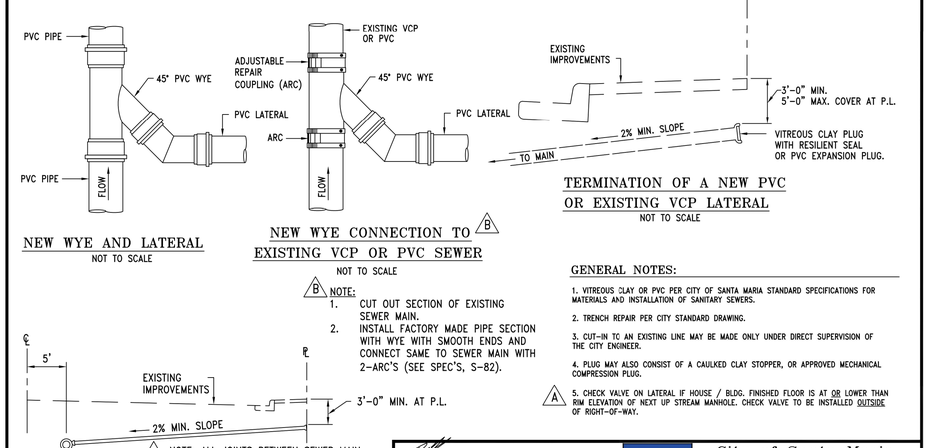

IDENTIFICATION STAMP
DIV. OF THE STATE ARCHITECT
APP: 03-121324 INC:
REVIEWED FOR
SS ☐ FLS ☐ ACS ☑
DATE: 09/14/2022

OFFICE OF THE STATE FIRE MARSHAL
APPROVED FIRE AND PANIC ONLY
09/07/22
21-0233

Approval of this plan does not authorize or approve any omission or deviation from applicable regulations. Final approval is subject to field inspection. One set of approved plans shall be available on the project site at all times.

DGS GENERAL SERVICES
Department of General Services
Architecture & Engineering Sections
State of California
Real Estate Services Division
Project Management & Development Branch
707 Third Street, Suite 4-105
West Sacramento, California 95605

REGISTERED PROFESSIONAL ENGINEER
JAMES DIGIORGIO
No. C-55479
Exp. 12/31/22
CIVIL
STATE OF CALIFORNIA
1/21/22

DMV
State of California
Department of Motor Vehicles

Issue		
No.	Date	Description
1	9/2/22	

Project
SANTA MARIA FIELD OFFICE REPLACEMENT
2770 SANTA MARIA WAY
SANTA MARIA, CA 93455
SANTA BARBARA COUNTY
DEPT OF MOTOR VEHICLES

Supervisor	Designed	Drawn
J.DIGIORGIO	C.ELLICOCK	C.ELLICOCK

DSA App No. 03-121324
SFM Permit No. 21-S-0233-CP-ER

Sheet Title
CIVIL CITY SANITARY SEWER DETAILS

Project Number
DGS000000140725

Reference North
Sheet Scale AS NOTED
Sheet Number C507

Copyright ©2022, California Department of General Services - Real Estate Services Division

CAD File: X:\Projects\14xxxx\140725\DWG\PLT\C507 CIVIL CITY SS DETAILS.dwg Plot Date: Jan 21, 2022 - 12:49am Plotted by: CEllicock

RELATIVE BORDER SCALE IN INCHES 0 1 2 3

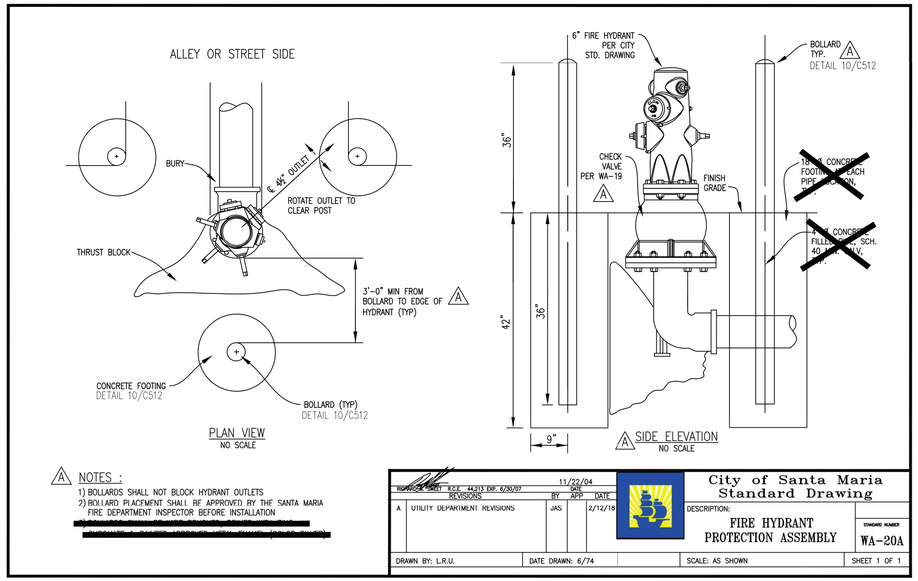

A NOTES :

1) BOLLARDS SHALL NOT BLOCK HYDRANT OUTLETS
2) BOLLARD PLACEMENT SHALL BE APPROVED BY THE SANTA MARIA FIRE DEPARTMENT INSPECTOR BEFORE INSTALLATION.

[redacted]

RICHARD C. SWEET R.C.E. 44,213 EXP. 6/30/07			11/22/04 DATE	
REVISIONS		BY	APP	DATE
A	UTILITY DEPARTMENT REVISIONS	JAS		2/12/18

City of Santa Maria
Standard Drawing

DESCRIPTION: FIRE HYDRANT PROTECTION ASSEMBLY

STANDARD NUMBER WA-20A

DRAWN BY: L.R.U. | DATE DRAWN: 6/74 | SCALE: AS SHOWN | SHEET 1 OF 1

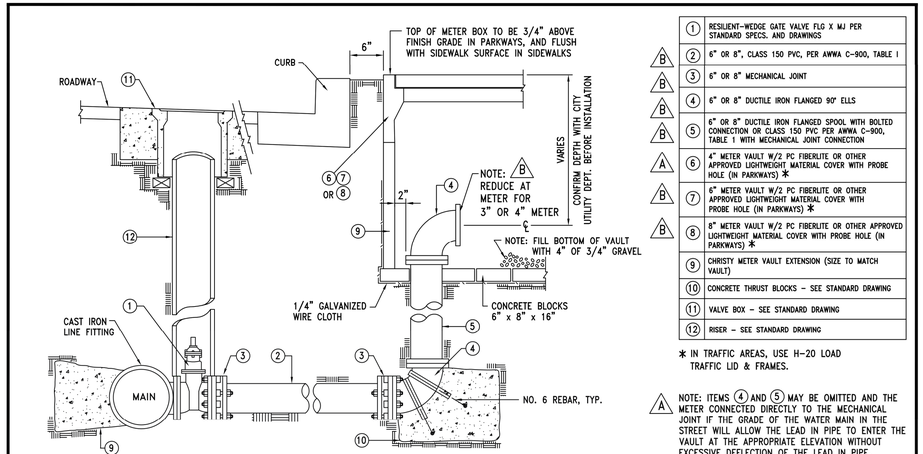

B	1	RESILIENT-WEDGE GATE VALVE FLG X MJ PER STANDARD SPECS. AND DRAWINGS
B	2	6" OR 8", CLASS 150 PVC, PER AWWA C-900, TABLE I
B	3	6" OR 8" MECHANICAL JOINT
B	4	6" OR 8" DUCTILE IRON FLANGED 90° ELLS
B	5	6" OR 8" DUCTILE IRON FLANGED SPOOL WITH BOLTED CONNECTION OR CLASS 150 PVC PER AWWA C-900, TABLE I WITH MECHANICAL JOINT CONNECTION
A	6	4" METER VAULT W/2 PC FIBERLITE OR OTHER APPROVED LIGHTWEIGHT MATERIAL COVER WITH PROBE HOLE (IN PARKWAYS) *
B	7	6" METER VAULT W/2 PC FIBERLITE OR OTHER APPROVED LIGHTWEIGHT MATERIAL COVER WITH PROBE HOLE (IN PARKWAYS) *
B	8	8" METER VAULT W/2 PC FIBERLITE OR OTHER APPROVED LIGHTWEIGHT MATERIAL COVER WITH PROBE HOLE (IN PARKWAYS) *
	9	CHRISTY METER VAULT EXTENSION (SIZE TO MATCH VAULT)
	10	CONCRETE THRUST BLOCKS – SEE STANDARD DRAWING
	11	VALVE BOX – SEE STANDARD DRAWING
	12	RISER – SEE STANDARD DRAWING

* IN TRAFFIC AREAS, USE H-20 LOAD TRAFFIC LID & FRAMES.

A NOTE: ITEMS (4) AND (5) MAY BE OMITTED AND THE METER CONNECTED DIRECTLY TO THE MECHANICAL JOINT IF THE GRADE OF THE WATER MAIN IN THE STREET WILL ALLOW THE LEAD IN PIPE TO ENTER THE VAULT AT THE APPROPRIATE ELEVATION WITHOUT EXCESSIVE DEFLECTION OF THE LEAD IN PIPE.

B GENERAL NOTES:

1. ALL NUT AND BOLT FITTINGS SHALL BE COVERED WITH CHRISTY CG-15 OR APPROVED EQUAL.
2. ALL FITTINGS SHALL BE WRAPPED WITH 20 MIL PLASTIC VISQUEEN.

RICHARD C. SWEET R.C.E. 44,213 EXP. 6/30/07			7/18/05 DATE	
REVISIONS		BY	APP	DATE
A	UTILITY DEPARTMENT REVISIONS	CJP		6/23/08
B	UTILITY DEPARTMENT REVISIONS	JAS		1/16/18

City of Santa Maria
Standard Drawing

DESCRIPTION: 3", 4", 6" OR 8" A,B WATER SERVICE

STANDARD NUMBER WA-18B

DRAWN BY: J.G. | DATE DRAWN: 3/80 | SCALE: NONE | SHEET 1 OF 1

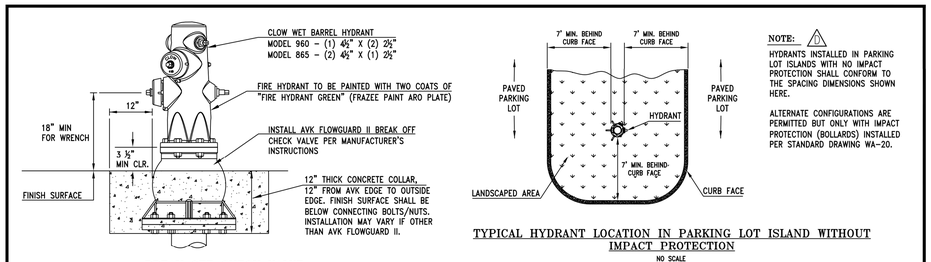

BREAK OFF CHECK VALVE
NO SCALE

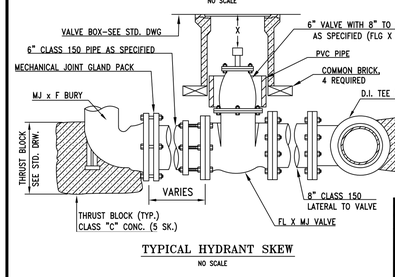

TYPICAL HYDRANT SKEW
NO SCALE

TYPICAL HYDRANT LOCATION IN PARKING LOT ISLAND WITHOUT IMPACT PROTECTION
NO SCALE

NOTE: A

HYDRANTS INSTALLED IN PARKING LOT ISLANDS WITH NO IMPACT PROTECTION SHALL CONFORM TO THE SPACING DIMENSIONS SHOWN HERE.

ALTERNATE CONFIGURATIONS ARE PERMITTED BUT ONLY WITH IMPACT PROTECTION (BOLLARDS) INSTALLED PER STANDARD DRAWING WA-20.

GENERAL NOTES:

1. THREADS ON THE 4 1/2" & 2 1/2" OUTLETS SHALL BE LUBRICATED W/ "NEVER SEEZ" ANTISEIZE & LUBRICATING COMPOUND AS MANUFACTURED BY NEVER SEEZ COMPOUND CORP. OR APPROVED EQUAL.
2. SEE STANDARD DRAWING FOR FIRE HYDRANT PROTECTION ASSEMBLY.
3. WHEN DIMENSION "X" EXCEEDS 48", SEE STANDARD DRAWING FOR VALVE STEM EXTENSION.
4. INTEGRAL MECHANICAL JOINTS ON FITTINGS ARE ACCEPTABLE.
5. REGARDLESS OF LOCATION, ALL HYDRANTS REQUIRE A CHECK VALVE.
6. ALL NUT AND BOLT FITTINGS SHALL BE COVERED WITH CHRISTY CG-15 OR APPROVED EQUAL.
7. ALL FITTINGS SHALL BE WRAPPED WITH 20 MIL PLASTIC VISQUEEN.
8. CONTRACTOR SHALL FOLLOW BURY DEPTH GUIDE STAMPED ON SIDE OF CHECK VALVE.

RICHARD C. SWEET R.C.E. 44,213 EXP. 6/30/07			11/22/04 DATE	
REVISIONS		BY	APP	DATE

City of Santa Maria
Standard Drawing

DESCRIPTION: 6" FIRE HYDRANT INSTALLATION COMMERCIAL/MULTI-FAMILY RESIDENTIAL

STANDARD NUMBER WA-31

DRAWN BY: JAS | DATE DRAWN: 1/16/2018 | SCALE: NONE | SHEET 1 OF 1

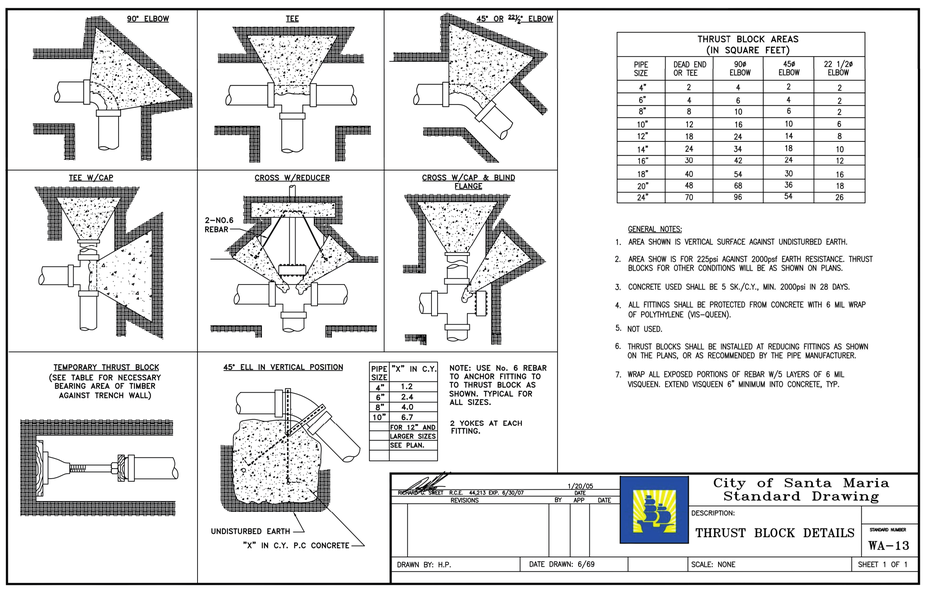

PIPE SIZE	"X" IN C.Y.
4"	1.2
6"	2.4
8"	4.0
10"	6.7
	FOR 12" AND LARGER SIZES SEE PLAN.

NOTE: USE No. 6 REBAR TO ANCHOR FITTING TO TO THRUST BLOCK AS SHOWN. TYPICAL FOR ALL SIZES.

2 YOKES AT EACH FITTING.

THRUST BLOCK AREAS (IN SQUARE FEET)

PIPE SIZE	DEAD END OR TEE	90ø ELBOW	45ø ELBOW	22 1/2ø ELBOW
4"	2	4	2	2
6"	4	6	4	2
8"	8	10	6	2
10"	12	16	10	6
12"	18	24	14	8
14"	24	34	18	10
16"	30	42	24	12
18"	40	54	30	16
20"	48	68	36	18
24"	70	96	54	26

GENERAL NOTES:

1. AREA SHOWN IS VERTICAL SURFACE AGAINST UNDISTURBED EARTH.
2. AREA SHOW IS FOR 225psi AGAINST 2000psf EARTH RESISTANCE. THRUST BLOCKS FOR OTHER CONDITIONS WILL BE AS SHOWN ON PLANS.
3. CONCRETE USED SHALL BE 5 SK./C.Y., MIN. 2000psi IN 28 DAYS.
4. ALL FITTINGS SHALL BE PROTECTED FROM CONCRETE WITH 6 MIL WRAP OF POLYTHYLENE (VIS-QUEEN).
5. NOT USED.
6. THRUST BLOCKS SHALL BE INSTALLED AT REDUCING FITTINGS AS SHOWN ON THE PLANS, OR AS RECOMMENDED BY THE PIPE MANUFACTURER.
7. WRAP ALL EXPOSED PORTIONS OF REBAR W/5 LAYERS OF 6 MIL VISQUEEN. EXTEND VISQUEEN 6" MINIMUM INTO CONCRETE, TYP.

RICHARD C. SWEET R.C.E. 44,213 EXP. 6/30/07			1/20/05 DATE	
REVISIONS		BY	APP	DATE

City of Santa Maria
Standard Drawing

DESCRIPTION: THRUST BLOCK DETAILS

STANDARD NUMBER WA-13

DRAWN BY: H.P. | DATE DRAWN: 6/69 | SCALE: NONE | SHEET 1 OF 1

IDENTIFICATION STAMP
DIV. OF THE STATE ARCHITECT
APP: 03-121324 INC: A
REVIEWED FOR
SS ☐ FLS ☐ ACS ☑
DATE: 09/14/2022

OFFICE OF THE STATE FIRE MARSHAL
APPROVED FIRE AND PANIC ONLY
09/07/22
21-0233
Approval of this plan does not authorize or approve any omission or deviation from applicable regulations. Final approval is subject to field inspection. One set of approved plans shall be available on the project site at all times.

DGS GENERAL SERVICES
Department of General Services
Architecture & Engineering Sections
State of California
Real Estate Services Division
Project Management & Development Branch
707 Third Street, Suite 4-105
West Sacramento, California 95605

REGISTERED PROFESSIONAL ENGINEER JAMES DIGIORGIO No. C-55479 Exp. 12/31/22 CIVIL STATE OF CALIFORNIA
1/21/22

DMV
State of California
Department of Motor Vehicles

Issue

No.	Date	Description
1	9/2/22	

Project
SANTA MARIA FIELD OFFICE REPLACEMENT
2770 SANTA MARIA WAY
SANTA MARIA, CA 93455
SANTA BARBARA COUNTY

DEPT OF MOTOR VEHICLES

Supervisor	Designed	Drawn
J.DIGIORGIO	C.ELLICOCK	C.ELLICOCK

DSA App No. 03-121324
SFM Permit No. 21-S-0233-CP-ER

Sheet Title
CIVIL CITY WATER DETAILS

Project Number
DGS000000140725

Reference North
Sheet Scale AS NOTED
Sheet Number C508

Copyright © 2022, California Department of General Services - Real Estate Services Division

CAD File: X:\Projects\144xxxx\140725\DWG\PLTC508 CIVIL CITY WATER DETAILS.dwg Plot Date: Jan 21, 2022 - 12:50am Plotted by: CEllicoc

RELATIVE BORDER SCALE IN INCHES 0 1 2 3

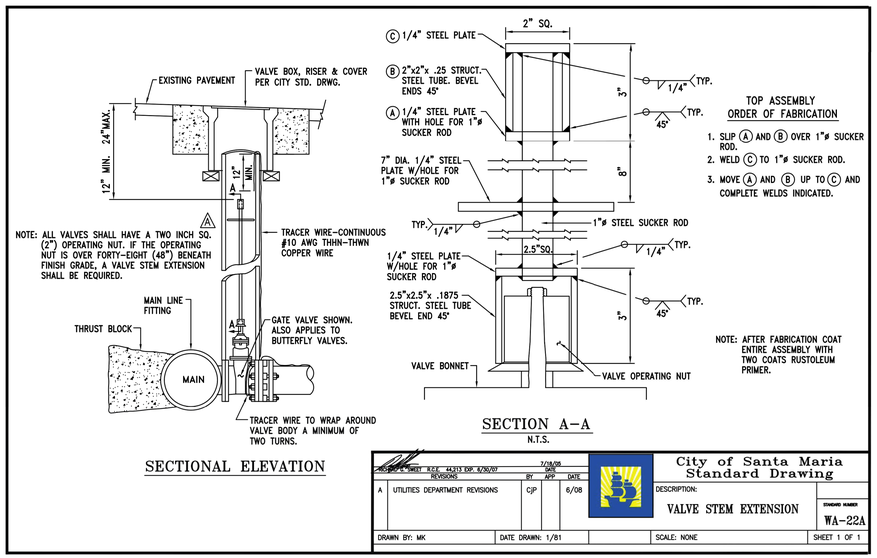

RICHARD G. SWEET R.C.E. 44,213 EXP. 6/30/07			DATE 7/28/08	City of Santa Maria Standard Drawing
REVISIONS		BY	APP DATE	
A	UTILITIES DEPARTMENT REVISIONS	CJP	6/08	DESCRIPTION: VALVE STEM EXTENSION
				STANDARD NUMBER WA-22A
DRAWN BY: MK	DATE DRAWN: 1/81		SCALE: NONE	SHEET 1 OF 1

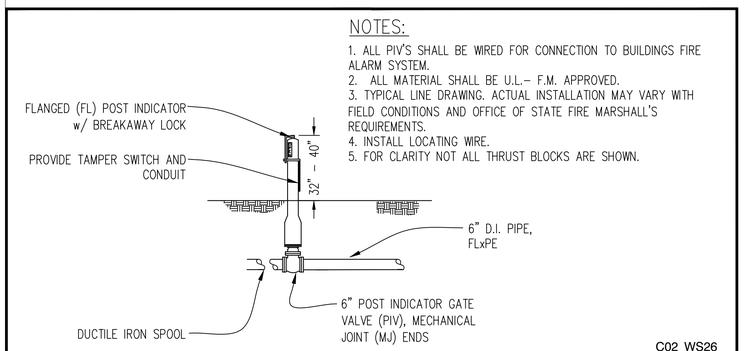

1	POST INDICATOR VALVE	NO SCALE

GENERAL NOTES:

1. ALL VALVE SIZES FROM 3" TO 12" SHALL BE RESILIENT WEDGE GATE VALVES WITH FLANGE BY MECHANICAL JOINT ENDS AWWA C-509 (CLOW, WATEROUS, AVK, M&H, OR APPROVED EQUAL).
2. ALL VALVE SIZES 14" AND ABOVE SHALL BE RUBBER SEATED BUTTERFLY VALVES WITH FLANGE BY MECHANICAL JOINT ENDS AWWA C-504 (MUELLER BRAND LINE SEAL III EPOXY LINED I.D. OR APPROVED EQUAL).
3. ALL FITTINGS SHALL BE DUCTILE IRON IN ACCORDANCE WITH ANSI/ AWWA C-110 SPECIFICATION.
4. BOLTS SHALL BE IN ACCORDANCE WITH AWWA SPECIFICATION C-207. ALL BOLTS SHALL BE ELECTRO GALVANIZED OR CADMIUM PLATED
5. GASKETS SHALL BE RUBBER (RING TYPE) IN ACCORDANCE WITH AWWA SPECIFICATION C110/C111.
6. BUTTERFLY VALVES ARE TO BE INSTALLED WITH THE OPERATORS ON THE RIGHT LOOKING DOWN THE RUN AS VIEWED WHEN STANDING ON THE INTERSECTION OF THE TEE OR CROSS.
7. TEE BOLTS SHALL BE USED WITH FLANGE COUPLING ADAPTORS.
8. ALL VALVES, FITTINGS AND PIPE SHALL BE IN ACCORDANCE WITH CITY STANDARD SPECIFICATION FOR MATERIALS AND INSTALLATION OF WATER MAINS.
9. ALL NUT AND BOLT FITTINGS SHALL BE COVERED WITH CHRISTY CG-15 OR APPROVED EQUAL.
10. ALL TEE'S AND FITTINGS SHALL BE WRAPPED WITH 20 MIL PLASTIC VIS-QUEEN.

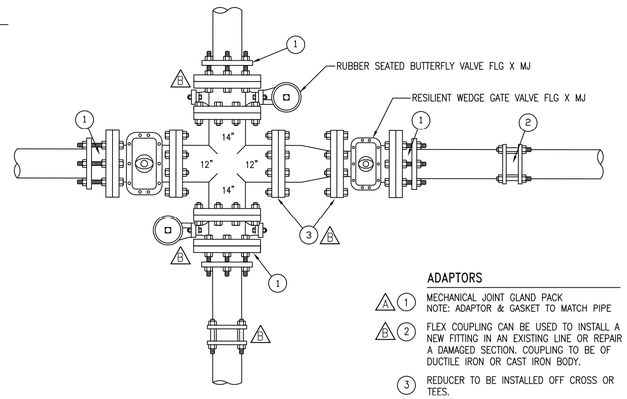

PLAN VIEW

ADAPTORS

A 1 MECHANICAL JOINT GLAND PACK
NOTE: ADAPTOR & GASKET TO MATCH PIPE

B 2 FLEX COUPLING CAN BE USED TO INSTALL A NEW FITTING IN AN EXISTING LINE OR REPAIR A DAMAGED SECTION. COUPLING TO BE OF DUCTILE IRON OR CAST IRON BODY.

3 REDUCER TO BE INSTALLED OFF CROSS OR TEES.

NOTE: INTEGRAL MECHANICAL JOINTS ON FITTINGS ARE ACCEPTABLE

RICHARD G. SWEET R.C.E. 44,213 EXP. 6/30/07			DATE 1/20/05	City of Santa Maria Standard Drawing
REVISIONS		BY	APP DATE	
A	UTILITY DEPARTMENT REVISIONS	CJP	11/15/12	DESCRIPTION: WATER MAIN-VALVE FITTING ARRANGEMENT
B	UTILITY DEPARTMENT REVISIONS	JAS	1/2/18	STANDARD NUMBER WA-12B
DRAWN BY: H.P.	DATE DRAWN: 4/69		SCALE: NONE	SHEET 1 OF 1

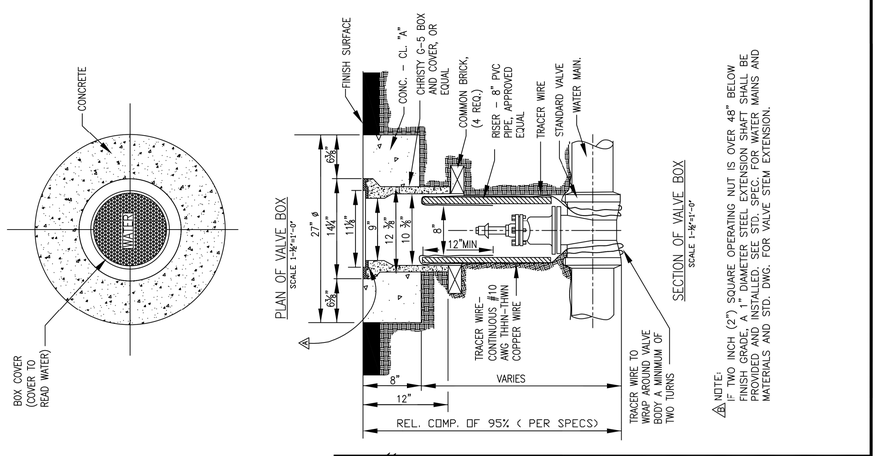

A INSTALL RAP-O MANHOLE COVER CUSHION AROUND BOX LID BY MUNICIPAL SERVICES INC.; 420 BOSTON TURNPIKE; SHREWSBURY MASS.; 01545 OR APPROVED EQUAL.

RICHARD G. SWEET R.C.E. 44,213 EXP. 6/30/07			DATE 11/22/04	City of Santa Maria Standard Drawing
REVISIONS		BY	APP DATE	
A	REVISION INDICATED	MK	8/06	DESCRIPTION: VALVE BOX & RISER
B	UTILITIES DEPARTMENT REVISIONS	CJP	6/08	STANDARD NUMBER WA-21B
DRAWN BY: R.L.B.	DATE DRAWN: 11/66		SCALE: NONE	SHEET 1 OF 1

IDENTIFICATION STAMP
DIV. OF THE STATE ARCHITECT
APP: 03-121324 INC:
REVIEWED FOR
SS ☐ FLS ☐ ACS ☑
DATE: 09/14/2022

OFFICE OF THE STATE FIRE MARSHAL
APPROVED FIRE AND PANIC ONLY
09/07/22
21-0233
Approval of this plan does not authorize or approve any omission or deviation from applicable regulations. Final approval is subject to field inspection. One set of approved plans shall be available on the project site at all times.

DGS GENERAL SERVICES
Department of General Services
Architecture & Engineering Sections
State of California
Real Estate Services Division
Project Management & Development Branch
707 Third Street, Suite 4-105
West Sacramento, California 95605

REGISTERED PROFESSIONAL ENGINEER
JAMES DIGIORGIO
No. C-55479
Exp. 12/31/22
CIVIL
STATE OF CALIFORNIA
1/21/22

DMV
State of California
Department of Motor Vehicles

Issue

No.	Date	Description
1	9/2/22	

Project
SANTA MARIA FIELD OFFICE REPLACEMENT
2770 SANTA MARIA WAY
SANTA MARIA, CA 93455
SANTA BARBARA COUNTY
DEPT OF MOTOR VEHICLES

Supervisor	Designed	Drawn
J.DIGIORGIO	C.ELLICOCK	C.ELLICOCK

DSA App No. 03-121324
SFM Permit No. 21-S-0233-CP-ER

Sheet Title
CIVIL CITY WATER DETAILS

Project Number
DGS000000140725

Reference North
Sheet Scale AS NOTED
Sheet Number C509

Copyright © 2022, California Department of General Services - Real Estate Services Division

CAD File: X:\Projects\14xxxx\140725\DWG\PLTC509 CIVIL CITY WATER DETAILS.dwg Plot Date: Jan 21, 2022 - 12:51am Plotted by: CEllicoc

RELATIVE BORDER SCALE IN INCHES 0 1 2 3

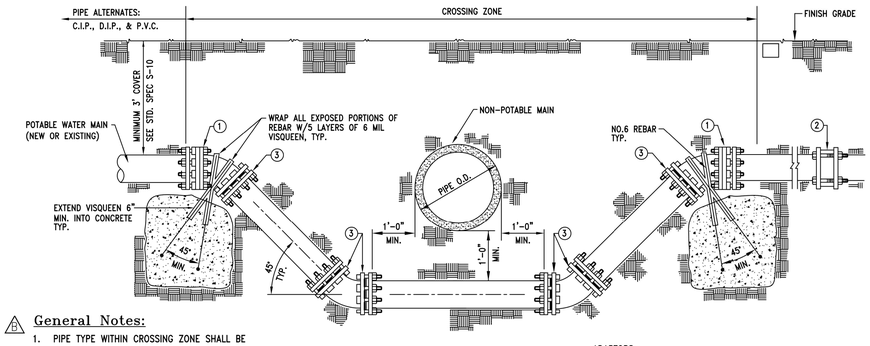

General Notes:

1. PIPE TYPE WITHIN CROSSING ZONE SHALL BE
   - A. HDPE PIPE WITH FUSION WELDED JOINTS (PER AWWA C906-99)
   - B. DUCTILE IRON PIPE WITH HOT DIP BITUMINOUS COATING AND GASKETED, BOLTED JOINTS.
   - C. DIPPED AND WRAPPED ¼" THICK WELDED STEEL PIPE
   - D. CLASS 200 PVC WATER PIPE (DR 14 PER AWWA C900-97)
   - E. REINFORCED CONCRETE PRESSURE PIPE, STEEL CYLINDER TYPE, PER AWWA (C300-97 OR C301-99, OR C303-95)
2. MATERIALS, FITTINGS, AND WORKMANSHIP SHALL COMPLY WITH CITY OF SANTA MARIA STANDARD SPECIFICATIONS AND DRAWINGS.
3. ALL FITTINGS SHALL BE WRAPPED WITH 20 MIL PLASTIC VISQUEEN.
4. PER CORRESPONDENCE WITH STATE DIVISION OF DRINKING WATER ON FILE WITH CITY PUBLIC WORKS THIS DETAIL SHALL SERVE AS AN APPROVED DEVIATION FROM CCR TITLE 22 SECTION 64572 FOR TRANSVERSE CROSSING OF WATER MAINS.

ADAPTORS:
1. MECHANICAL JOINT ADAPTOR x FE
   NOTE: ADAPTOR & GASKET TO MATCH PIPE
2. FLEX COUPLING CAN BE USED TO INSTALL A NEW FITTING IN AN EXISTING LINE. COUPLING TO BE OF DUCTILE IRON OR CAST METAL BODY.
3. RESTRAINED JOINT, "MEGA-LUG" OR APPROVED EQUIVALENT, PRESSURE RATED AT 350 PSI

KEVIN P. MCCUNE R.C.E. 59572 — 5/8/19

REVISIONS	BY	APP	DATE
A UTILITY DEPARTMENT REVISIONS	CJP		11/15/12
B UTILITY DEPARTMENT REVISIONS	JAS		4/8/19

City of Santa Maria Standard Drawing

DESCRIPTION: WATERLINE LOWERING DETAIL (CROSSING NON-POTABLE LINES)

STANDARD NUMBER: WA-28B

DRAWN BY: L.R.U. | DATE DRAWN: 3/79 | SCALE: NONE | SHEET 1 OF 1

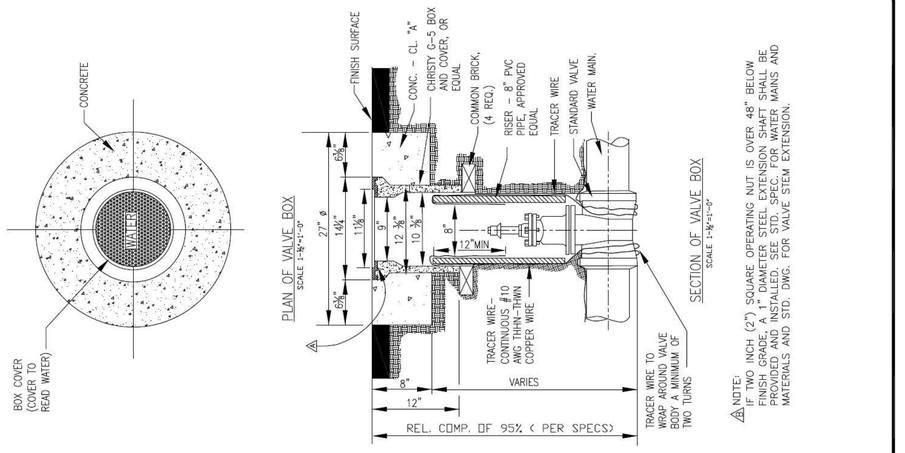

NOTE: IF TWO INCH (2") SQUARE OPERATING NUT IS OVER 48" BELOW FINISH GRADE, A 1" DIAMETER STEEL EXTENSION SHAFT SHALL BE PROVIDED AND INSTALLED. SEE STD. SPEC. FOR WATER MAINS AND MATERIALS AND STD. DWG. FOR VALVE STEM EXTENSION.

INSTALL RAP-O MANHOLE COVER CUSHION AROUND BOX LID BY MUNICIPAL SERVICES INC.; 420 BOSTON TURNPIKE, SHREWSBURY MASS.; 01545 OR APPROVED EQUAL.

MICHAEL S. SWEET R.C.E. 44213 EXP. 6/30/07 — 11/22/04

REVISIONS	BY	APP	DATE
A REVISION INDICATED	MK		8/06
B UTILITIES DEPARTMENT REVISIONS	CJP		6/08

City of Santa Maria Standard Drawing

DESCRIPTION: VALVE BOX & RISER

STANDARD NUMBER: WA-21B

DRAWN BY: R.L.B. | DATE DRAWN: 11/66 | SCALE: NONE | SHEET 1 OF 1

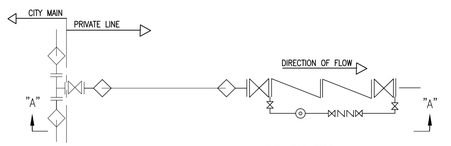

SCHEMATIC

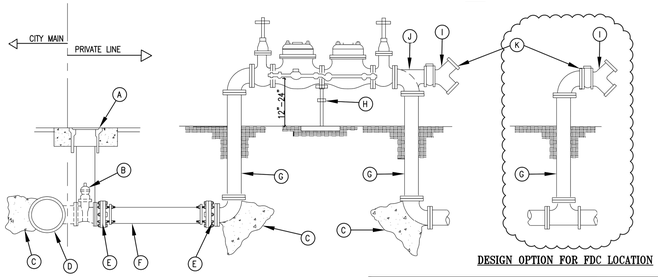

SECTION "A"-"A"

DESIGN OPTION FOR FDC LOCATION

GENERAL NOTES

1. All backflow prevention assemblies shall be in accordance with Section 7601 of Title 17 of the California Code of Regulations.
2. Developer shall install an approved *Double Check – Detector Check Backflow Prevention Assembly* (DCDA) on fire sprinkler systems.
3. All backflow prevention assembly installations – including spatial requirements and assembly orientation – shall be performed according to the Foundation of Cross Connection Control and Hydraulic Research of USC as established in the Manual of Cross-Connection Control – Specifications of Backflow Prevention Assemblies, Tenth Edition, or any successor edition.
4. The DCDA shall be a specially designed assembly composed of a line-size approved double check valve assembly with a bypass containing a specific water meter and an approved double check valve assembly.
5. Backflow prevention assembly location must be clearly indicated on plans and shall be installed above ground with 12 to 24 inches clearance unless otherwise approved by City Engineer.
6. Assembly must be accessible for testing, maintenance, and meter reading.
7. Meter shall be brass construction throughout and shall read cubic feet.
8. All fittings to be wrapped with 20 mil plastic Visqueen.

LEGEND

- A) Valve Box & Riser per City Std. Drwg. WA-21B this sheet.
- B) F X F Resilient-Seated Gate Valve.
- C) Thrust Block per City Std. Drwg.
- D) F X F X F Tee.
- E) PVC Adaptor (F & MJ) or replace item B above with F X MJ Resilient-Seated Gate Valve.
- F) PVC Pipe.
- G) Spools shall be ductile iron and have threaded flanges.
- H) Min. 1 adjustable support with min. 18"x24"x4" concrete building pad. All exposed metal shall be galvanized.
- I) Fire Department Connection (FDC) with flapper check valve. FDC shall be "Siamese" type with dual inlets or "Quadramese" type with four (4) inlets.
- J) Use Tee to connect FDC. Replace with 90 elbow if plumbing FDC separately. See note K below.
- K) FDC may be plumbed directly to backflow assembly or on a separate standpipe downstream of the backflow as shown.

F Item E revised. Added items I, J, K

Steven B. Kahn — STEVE KAHN – PUBLIC WORKS DIRECTOR/CITY ENGINEER R.C.E. 42350

REVISIONS	BY	APP	DATE
D UTILITY DEPT. REVISIONS	CJP		11/12
E UTILITY DEPT. REVISIONS	CJP		10/17
F PUBLIC WORKS/FIRE REVISIONS	JAS		5/19

City of Santa Maria Standard Drawing

DESCRIPTION: FIRE SERVICE BACKFLOW PREVENTION ASSEMBLIES 4" AND LARGER

STANDARD NUMBER: WA-27F

DRAWN BY: M.K. | DATE DRAWN: 10/92 | SCALE: NONE | SHEET 1 OF 1

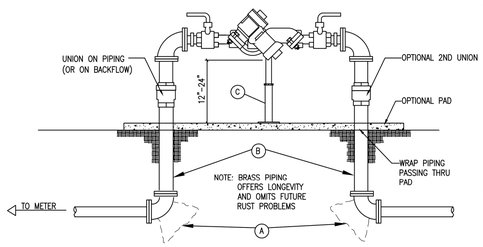

GENERAL NOTES

1. All backflow prevention assemblies shall be in accordance with Section 7601 of Title 17 of the California Code of Regulations.
2. Developer shall install an approved Reduced Pressure Principle Backflow Prevention Assembly (RP) on domestic and landscape water service lines.
3. Backflow prevention devices serving domestic uses shall be "lead-free" per California AB1953 and meet the requirements of ANSI/NSF 61, Section 9.
4. All backflow prevention assembly installations – including spatial requirements and assembly orientation – shall be performed according to the Foundation of Cross Connection Control and Hydraulic Research of USC as established in the Manual of Cross-Connection Control – Specifications of Backflow Prevention Assemblies, Tenth Edition, or any successor edition.
5. Backflow prevention assembly location must be clearly indicated on plans and shall be installed above ground with 12 to 24 inches clearance unless otherwise approved by City Engineer.
6. Assembly must be accessible for testing, maintenance, and meter reading.
7. Backflow prevention assemblies shall be located within 10 feet of the water meter. No connections or tees are allowed between the meter and the assembly.

LEGEND

- A) Thrust Block per City Std. Drwg.
- B) Pipe fittings shall be brass or copper when diameter is 3" or less and DI pipe when larger than 3".
- C) Min. 1 adjustable support with min. 18"x24"x4" concrete pad. All exposed metal shall be galvanized (as needed).

Steven B. Kahn — STEVE KAHN – PUBLIC WORKS DIRECTOR – R.C.E. 42350

REVISIONS	BY	APP	DATE
A			
B			
C			
D			

City of Santa Maria Standard Drawing

DESCRIPTION: NON-FIRE SERVICE BACKFLOW PREVENTION ASSEMBLIES 3/4" TO 10"

STANDARD NUMBER: WA-29

DRAWN BY: CJP | DATE DRAWN: 9/2017 | SCALE: NONE | SHEET 1 OF 1

IDENTIFICATION STAMP
DIV. OF THE STATE ARCHITECT
APP: 03-121324 INC:
REVIEWED FOR
SS ☐ FLS ☐ ACS ☑
DATE: 09/14/2022

OFFICE OF THE STATE FIRE MARSHAL
APPROVED FIRE AND PANIC ONLY
09/07/22
21-0233
Approval of this plan does not authorize or approve any omission or deviation from applicable regulations. Final approval is subject to field inspection. One set of approved plans shall be available on the project site at all times.

DGS GENERAL SERVICES
Department of General Services
Architecture & Engineering Sections
State of California
Real Estate Services Division
Project Management & Development Branch
707 Third Street, Suite 4-105
West Sacramento, California 95605

REGISTERED PROFESSIONAL ENGINEER — JAMES DIGIORGIO — No. C-55479 Exp. 12/31/22 — CIVIL — STATE OF CALIFORNIA
1/21/22

DMV State of California Department of Motor Vehicles

Issue

No.	Date	Description
1	9/2/22	

Project
SANTA MARIA FIELD OFFICE REPLACEMENT
2770 SANTA MARIA WAY
SANTA MARIA, CA 93455
SANTA BARBARA COUNTY

DEPT OF MOTOR VEHICLES

Supervisor	Designed	Drawn
J.DIGIORGIO	C.ELLICOCK	C.ELLICOCK

DSA App No. 03-121324 | SFM Permit No. 21-S-0233-CP-ER

Sheet Title: CIVIL CITY WATER DETAILS

Project Number: DGS000000140725

Reference North | Sheet Scale: AS NOTED | Sheet Number: C510

Copyright © 2022, California Department of General Services - Real Estate Services Division

CAD File: X:\Projects\14xxxx\140725\DWG\PLTC510 CIVIL CITY WATER DETAILS.dwg Plot Date: Jan 21, 2022 - 12:52am Plotted by: CBjlicoc

RELATIVE BORDER SCALE IN INCHES 0 1 2 3

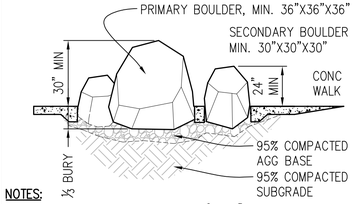

NOTES:

1. BURY BOULDERS TO EXPOSE ⅔ TO ¾ THEIR HEIGHT AND APPEAR AS NATURAL AS POSSIBLE.
2. INSTALL LOCALLY SOURCED WEATHERED BOULDERS OR MOSS ROCK. NEWLY FRACTURED 'RIPRAP' WILL NOT BE ACCEPTED.
3. PLACE BOULDERS IN GROUPS OF THREE, 2' MIN FROM FACE OF CURB AS SHOWN ON PLANS.

8 BOULDER INSTALLATION

NOTE:

1. SIGN SHALL BE A MINIMUM OF 12"X12" IN SIZE.
2. REFLECTORIZED SIGN PANEL – 0.08" MINIMUM ALUMINUM SHEET, ENAMEL PAINTED AFTER SMOOTHING ALL EDGES OR PORCELAIN COATED 18 GAGE STEEL SHEET. PAINT ROYAL BLUE, COLOR NO. 15090 IN SAE INTERNATIONAL STANDARD SAE–AMS–STD–595, BACKGROUND WITH WHITE SYMBOL, ARROW AND BORDER STRIPE.
3. MOUNT ON POST, DETAIL 2, AT A MINIMUM HEIGHT OF 42" ABOVE GRADE AND OFF ACCESSIBLE ROUTE.
4. ARROW DIRECTION SHALL BE AS REQUIRED BY PLANS.

REF. CBC 11B–703.5

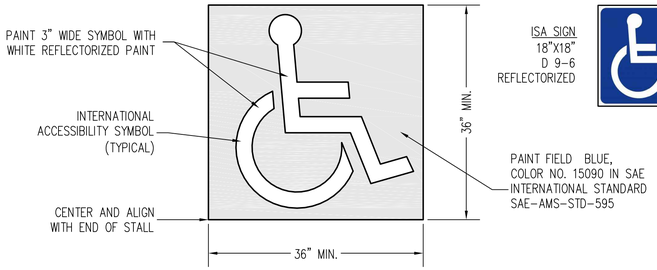

ISA PAVEMENT MARKING

REF. CBC 11B–502.6.4

6 INTERNATIONAL SYMBOL OF ACCESSIBILITY

1" = 1'–0"

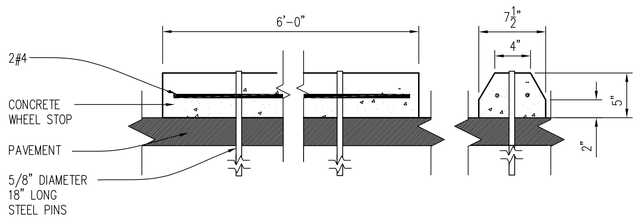

EXACT DIMENSIONS MAY VARY PER MANUFACTURER.

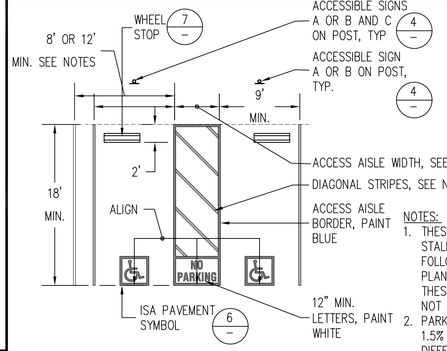

DOUBLE ACCESSIBLE PARKING STALLS

NOTES:

1. THESE DETAILS SHOW COMPLIANCE WITH CBC FOR STALL CONFIGURATION. CONTRACTOR SHALL FOLLOW GRADES AND DIMENSIONS SHOWN ON PLANS. CONTRACTOR SHALL CONFIRM THAT THESE DETAILED MINIMUMS AND MAXIMUMS HAVE NOT BEEN EXCEEDED.
2. PARKING AND ACCESS AISLE SLOPE SHALL BE 1.5% MAX. IN ANY DIRECTION UNLESS NOTED DIFFERENTLY ON THESE PLANS.
3. ALL STRIPING 4" WIDE, UNLESS OTHERWISE NOTED.
4. DIMENSIONS ARE TO CENTERLINE OF STRIPE, UNLESS OTHERWISE NOTED.
5. ACCESSIBLE AISLE WIDTH – SHALL NOT PROJECT INTO ADJACENT WALKWAYS.
   - 8'–0" MINIMUM FOR VAN ACCESS, 5'–0" ACCEPTABLE WITH 12'–0" MIN. STALL WIDTH
   - 5'–0" MINIMUM FOR CAR
6. DIAGONAL HATCH PATTERN, 3'–0" MAXIMUM ON CENTER, PAINT WITH CONTRASTING COLOR AGAINST PARKING SURFACE
   - BLUE ON CONCRETE
   - WHITE ON ASPHALT
7. SEE PLAN FOR CURB RAMP LOCATION AND CONFIGURATION.
8. AN ACCESSIBLE ROUTE SHALL CONNECT THE ACCESSIBLE EVCS SPACE AND THE EV CHARGER WHICH SERVES IT.
9. THE EV CHARGER OPERABLE PARTS, INCLUDING CHARGING CORD STORAGE, SHALL BE ACCESSIBLE PER 11B–309.

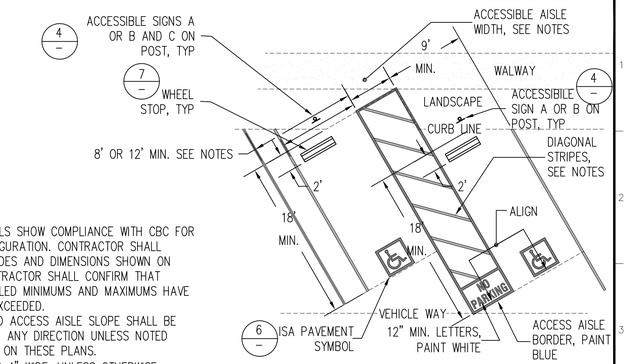

DIAGONAL ACCESSIBLE PARKING STALLS

ACCESSIBLE PARKING COUNT

TOTAL PARKING IN LOT	MIN. TOTAL ACCESSIBLE PARKING	MINIMUM VAN ACCESSIBLE	INCLUDED IN PROJECT (TOT/TOT ACC/VAN)
1–25	1 SPACE(S)	1 SPACE(S)	
26–50	2	1	
51–75	3	1	
76–100	4	1	(90/4/2)
101–150	5	1	
151–200	6	1	
201–300	7	2	
301–400	8	2	
401–500	9	2	
501–1,000	*	1 IN 6 SPACES	
1,001 AND OVER	**	1 IN 6 SPACES	

*TWO PERCENT OF TOTAL.
**TWENTY PLUS ONE FOR EACH 100, OR FRACTION OVER 1,000.
REF. CBC TABLE 11B–208.2

EVCS STALL COUNT

TOTAL PARKING	REQUIRED EV CHARGING SPACES	MINIMUM ADA ACCESSIBLE (VAN/STD/AMB)	INCLUDED IN PROJECT (EV/VAN/STD/AMB)
0–9	0 STALL(S)	0/0/0 STALL(S)	
10–25	2	1/0/0	
26–50	4	1/0/0	
51–75	7	1/1/0	
76–100	9	1/1/0	(9/1/1/0)
101–150	13	1/1/0	
151–200	18	1/1/0	
201 +	*	**	

* 10% of total. Calculation for spaces shall be rounded up to the nearest whole number. See Cal Green Table 5.106.3.3
** See CBC Table 11B–228.3.2.1.

REF. CBC 11B–208 & 501

9 DIRECTIONAL SIGN

2" = 1'–0"

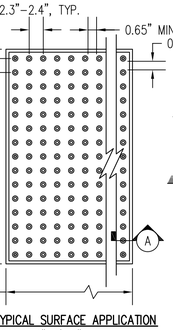

TYPICAL SURFACE APPLICATION
SCALE: 1"=1'–0"

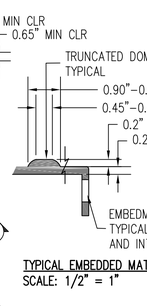

TYPICAL EMBEDDED MAT EDGE SECTION A
SCALE: 1/2" = 1"

7 6' CONCRETE WHEEL STOP

¾"=1'–0"

NOTES:

1. MAT SHALL BE UV PROTECTED, SLIP–RESISTANT YELLOW FIBERGLASS MATERIAL (FS33538 OF FEDERAL STD. 595C) W/REPLACEABLE SURFACE.
2. PREPARE SURFACE PER MANUFACTURERS REQUIREMENTS.
3. TRUNCATED DOMES SHALL BE EMBEDDED IN CONCRETE OR SURFACE APPLIED, AS SHOWN IN PLANS, PER MANUFACTURES REQUIREMENTS OR HEREIN DETAILED, WHICHEVER PROVIDES GREATER ANCHORAGE. ANY VARIATION FROM THESE DETAILS SHALL BE APPROVED BY THE STATE.
4. TRUNCATED DOMES SHALL CONFORM TO SPECIFICATIONS OF 2019 CBC SECTION 11B–705.1.

REF. CBC 11B–705

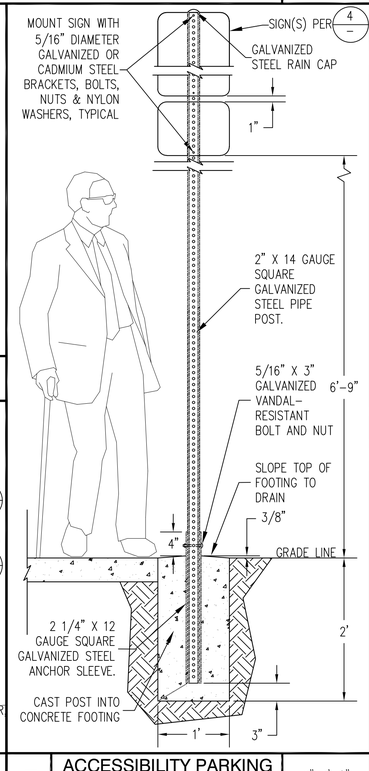

10 DETECTABLE WARNING, TRUNCATED DOMES

AS NOTED

NOTE: CBC MINIMUMS ONLY. CONTRACTOR SHALL FOLLOW LAYOUT & GRADES SHOWN ON PLANS; ACCESSIBLE PARKING AND ACCESS AISLE SLOPE SHALL BE 1.5% MAX. IN ANY DIRECTION UNLESS NOTED DIFFERENTLY ON THESE PLANS.

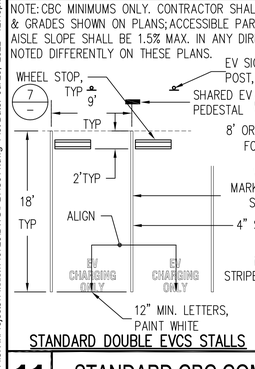

STANDARD DOUBLE EVCS STALLS

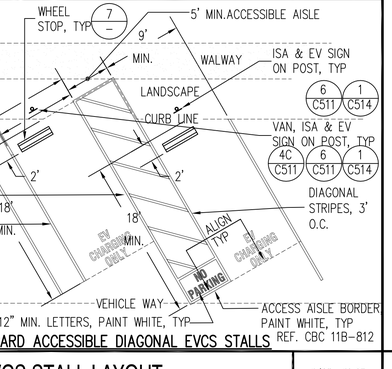

STANDARD ACCESSIBLE DIAGONAL EVCS STALLS

REF. CBC 11B–812

11 STANDARD CBC COMPLIANT EVCS STALL LAYOUT

1/8"=1'–0"

5 ACCESSIBILITY PARKING SIGN POST DETAIL

1"=1'–0"

2 STANDARDS FOR ACCESSIBLE PARKING AND EVCS STALL COUNT

1/8"=1'–0"

NOTE:

1. SIGN SHALL NOT BE LESS THAN 17" BY 22" IN SIZE AND HAVE A MINIMUM OF 1" HIGH LETTERING.
2. SIGN SHALL BE INSTALLED ON A POST OR WALL AT A 42 INCHES ABOVE GRADE AS SHOWN ON PLANS.
3. POSTED SIGN IN A CONSPICUOUS PLACE AT EACH ENTRANCE TO OFF–STREET PARKING AS SHOWN ON PLANS.
10. REFLECTORIZED SIGN PANEL – 0.08" MINIMUM ALUMINUM SHEET, ENAMEL PAINTED AFTER SMOOTHING ALL EDGES OR PORCELAIN COATED 18 GAGE STEEL SHEET. WHITE BACKGROUND WITH BLACK SYMBOL, LETTERS, NUMBERS AND BORDER STRIPE.

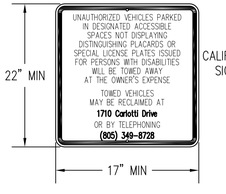

CALIFORNIA REGULATORY SIGN SPECIFICATION: R100B(CA)

REF. CBC 11B–502.8

3 ACCESSIBILE PARKING TOW-AWAY SIGN

1" = 1'–0"

NOTE:

1. EACH PARKING SPACE SHALL BE IDENTIFIED BY A REFLECTORIZED SIGN PERMANENTLY POSTED IMMEDIATELY ADJACENT TO AND VISIBLE FROM EACH STALL OR SPACE, CONSISTING OF THE INTERNATIONAL SYMBOL OF ACCESSIBILITY IN WHITE ON A DARK BLUE BACKGROUND.
2. PLACE SIGN IN FRONT OF EACH ACCESSIBLE PARKING STALL WITHIN CLEAR VIEW AND ON A POST, AS SHOWN ON PLANS. SIGNS MAY BE LOCATED CENTERED ON WALL AT A MINIMUM HEIGHT OF 60 INCHES ABOVE GRADE AND ALIGNED WITH THE PARKING STALL AT THE INTERIOR END OF THE PARKING SPACE IF SHOWN ON PLANS.
7. AN ADDITIONAL SIGN OR ADDITIONAL LANGUAGE BELOW THE SYMBOL OF ACCESSIBILITY SHALL STATE "MINIMUM FINE $250.
8. AN ADDITIONAL "VAN ACCESSIBLE" SIGN, IF REQUIRED, SHALL BE LOCATED BELOW THE SYMBOL OF ACCESSIBILITY. MAINTAIN MIMIMUM HEIGHT ABOVE GRADE AS INDICATED IN NOTE 2.
9. LOCATION OF SIGN SHALL NOT OBSTRUCT PASSAGE FROM PARKING ACCESS ISLE OR ANY WALKWAYS.
10. REFLECTORIZED SIGN PANEL – 0.08" MINIMUM ALUMINUM SHEET, ENAMEL PAINTED AFTER SMOOTHING ALL EDGES OR PORCELAIN COATED 18 GAGE STEEL SHEET. PAINT ROYAL BLUE, COLOR NO. 15090 IN FEDERAL STANDARD 595B, BACKGROUND WITH WHITE SYMBOL, LETTERS, NUMBERS AND BORDER STRIPE.

CALIFORNIA REGULATORY SIGN SPECIFICATION:

A1 R99(CA)

A2 R99B(CA)

B R99C(CA)

C FEDERAL REGULATORY SIGN R7–8B

REF. CBC 11B–502.6

4 ACCESSIBLE PARKING SPACE SIGNS

1" = 1'–0"

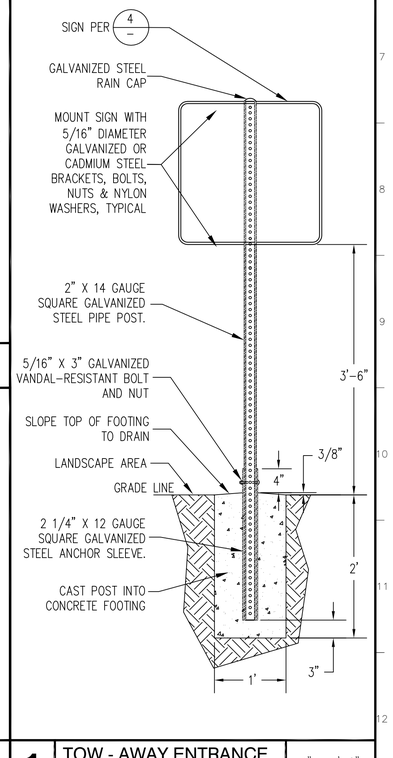

1 TOW - AWAY ENTRANCE SIGN POST DETAIL

1" = 1'–0"

RELATIVE BORDER SCALE IN INCHES 0 1 2 3

IDENTIFICATION STAMP
DIV. OF THE STATE ARCHITECT
APP: 03-121324 INC:
REVIEWED FOR
SS ☐ FLS ☐ ACS ☑
DATE: 09/14/2022

OFFICE OF THE STATE FIRE MARSHAL
APPROVED FIRE AND PANIC ONLY
09/07/22
21-0233
Approval of this plan does not authorize or approve any omission or deviation from applicable regulations. Final approval is subject to field inspection. One set of approved plans shall be available on the project site at all times.

DGS GENERAL SERVICES
Department of General Services
Architecture & Engineering Sections
State of California
Real Estate Services Division
Project Management & Development Branch
707 Third Street, Suite 4-105
West Sacramento, California 95605

REGISTERED PROFESSIONAL ENGINEER
Scott C. McDonell
No. C-62154
CIVIL
STATE OF CALIFORNIA
7/29/22

DMV
State of California
Department of Motor Vehicles

Issue

No.	Date	Description
1	9/2/22	

Project
SANTA MARIA FIELD OFFICE REPLACEMENT
2770 SANTA MARIA WAY
SANTA MARIA, CA 93455
SANTA BARBARA COUNTY
DEPT OF MOTOR VEHICLES

Supervisor	Designed	Drawn
E. VELAGIC	S. MCDONELL	S. MCDONELL

DSA App No. 03-121324
SFM Permit No. 21-S-0233-CP-ER

Sheet Title
CIVIL ACCESSIBILITY STANDARD DETAILS

Project Number
DGS000000140725

Reference North
Sheet Scale AS NOTED
Sheet Number C511

© Copyright 2022, California Department of General Services - Real Estate Services Division

CAD File: X:\Projects\14xxxx\140725\DWG\PLTC511.dwg Plot Date: Jul 29, 2022 - 12:45pm Plotted by: SMcDonel

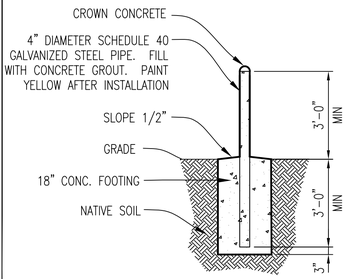

NOTE: CENTER POST IN FOOTING.

11 PROTECTION BOLLARD — 1/2"=1'-0"

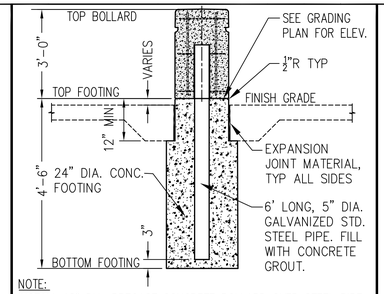

NOTE:
INSTALL 18" DIA. PRECAST CONCRETE BOLLARD OVER STEEL PIPE. FINISH SHALL BE ACID WASH WITH COLOR APPROVED BY STATE. BOLLARD SHALL BE CUSTOM PREMANUFACTURED BOLLARD BY WAUSAU TILE OR APPROVED EQUAL.

C02_GP03

10 PRECAST CONCRETE BARRIER BOLLARD — 1" = 1'-0"

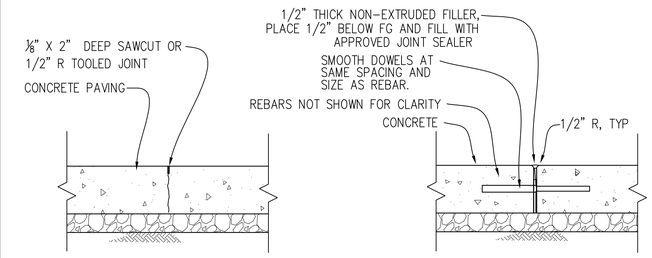

C02_CG04

6 TYPICAL CONCRETE PAVING JOINTS — NTS

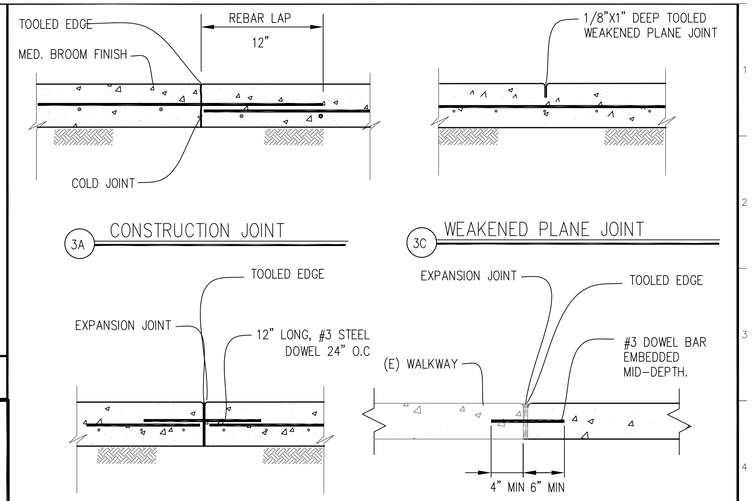

NOTE :
1. AT EXISTING WALKWAYS, DRILL AND EPOXY DOWELS INTO EXISTING CONCRETE.
2. AT NEW CONSTRUCTION JOINTS, INSERT DOWELS 6" EQUALLY INTO EACH SLAB.
3. FOR EXPANSION JOINTS USE "THICK NON-EXTRUDED FELT AND PLACE 1/2" BELOW FINISH GRADE AND FILL WITH 2-PART JOINT SEALANT.
4. EDGES SHALL BE TOOLED 1/8" RADIUS TYPICAL 5. EXPANSION JOINT REQUIRED WHERE SHOWN ON PLANS AND ALONG WALLS, FOOTINGS AND FOUNDATIONS.
6. ALL WALKWAYS THAT CONNECT TO DOORWAYS OR GATES SHALL BE DOWELED TO FOUNDATION 12" O.C., TYP.

C025Nd21

2 TYPICAL CONC. WALKWAY JOINTS — NTS

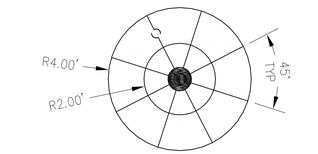

CONCRETE SCORE PATTERN

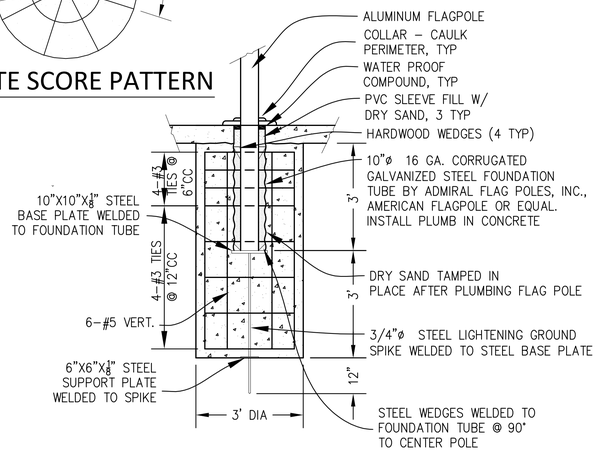

CONCRETE FOOTING SECTION

CONSTRUCTION AND ASSEMBLY NOTES:

1. REMOVE HARDWOOD WEDGES AFTER FLAGPOLE PLACEMENT AND COMPACTION OF SAND AND PRIOR TO PLACEMENT OF WATERPROOF COMPOUND.
2. HOT DIP GALVANIZE STEEL BASE PLATE, SUPPORT AND STEEL LIGHTNING GROUND SPIKE AFTER ASSEMBLY AND WELDING ARE COMPLETE.
3. DO NOT USE ADMIXTURES IN FOUNDATION CONCRETE WHICH CONTAIN MORE THAN 1% CHLORIDES AS CL BY WEIGHT OF ADMIXTURE.
4. ENSURE THAT FLAGPOLE SETTING SAND IS DRY DURING ENTIRE PLACEMENT, COMPACTION AND SEALING PROCESS.

13 FLAG POLE FOUNDATION — N.T.S.

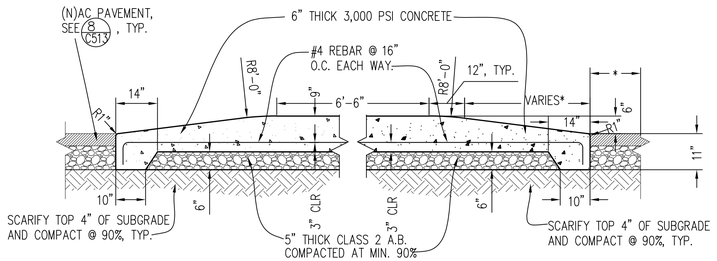

* SEE PARTIAL SITE PLANS FOR THIS DIMENSION.

C02_CP02

12 SPEED TABLE CROSSWALK — NO SCALE

NOTES:
*6" TYP, HEIGHT VARIES IN SOME LOCATIONS, SEE GRADING PLAN FOR TOP OF PAVEMENT AND TOP OF CURB ELEVATIONS. 12" HEIGHT AT TRUCK DELIVERY AREA.
**DEPTH AT BIO-SWALES SHALL BE 12" BELOW FLOWLINE. CURB ENDS SHALL TRANSITION TO GRADE IN 12" DISTANCE.

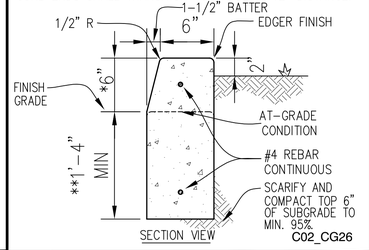

C02_CG26

7 6"/12" CONC CURB — 1 1/2" = 1'-0"

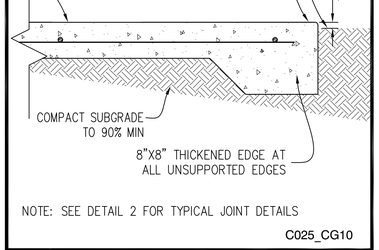

NOTE: SEE DETAIL 2 FOR TYPICAL JOINT DETAILS

C025_CG10

3 CONCRETE WALK — 1 1/2"=1'-0"

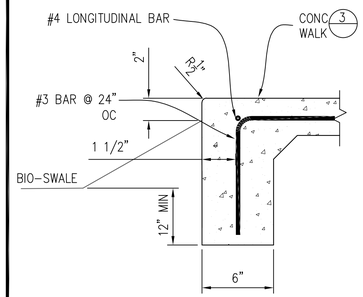

C02_CG21

8 CUT-OFF WALL — N.T.S

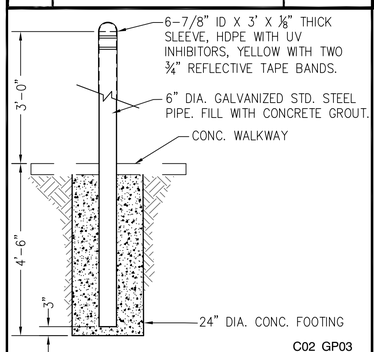

C02_GP03

9 BARRIER BOLLARD — NTS

NOTE:
1. SEE DETAIL 6 FOR TYP JOINT DETAILS
2. CONSTRUCT EXPANSION JOINTS AT FOUNDATIONS, CURBS, GUTTERS AND WHERE SHOWN ON PLANS.

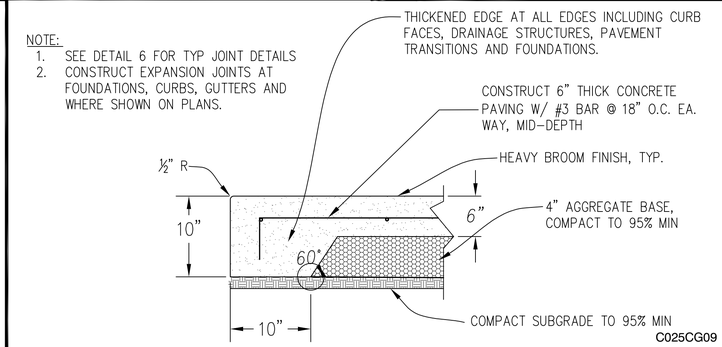

C025CG09

4 CONCRETE PAVEMENT — 1-1/2"=1'-0"

NOTES:
1. FOOTING SHALL BE PLACED ON UNDISTURBED NATIVE SOIL.
2. COLOR CONCRETE AS APPROVED BY STATE, MEDIUM BROOM OR SAND BLAST FINISH

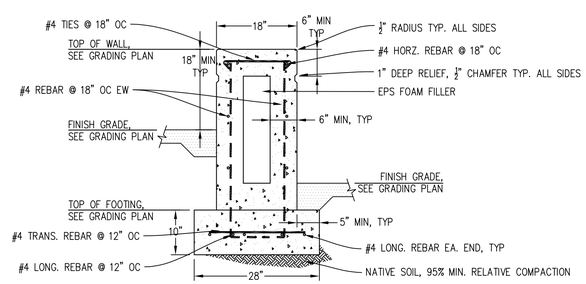

5 CONCRETE SEAT WALL — N.T.S.

NOTES:
1. GROUT FILLED WALL SHALL HAVE STRENGTH OF 2150 PSI NORMAL WEIGHT. CMU SHALL BE SPLIT FACE, COLOR MATCHING BLDG & APPROVED BY THE STATE.
2. CONCRETE SHALL ATTAIN 28TH DAY COMPRESSION STRENGTH AT 3,000 PSI.

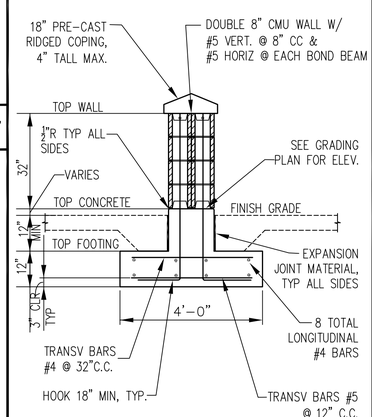

X01_XX01

1 BARRIER WALL — N.T.S

IDENTIFICATION STAMP
DIV. OF THE STATE ARCHITECT
APP: 03-121324 INC: A
REVIEWED FOR
SS ☐ FLS ☐ ACS ☑
DATE: 09/14/2022

OFFICE OF THE STATE FIRE MARSHAL
APPROVED FIRE AND PANIC ONLY
09/07/22
21-0233
Approval of this plan does not authorize or approve any omission or deviation from applicable regulations. Final approval is subject to field inspection. One set of approved plans shall be available on the project site at all times.

DGS GENERAL SERVICES
Department of General Services
Architecture & Engineering Sections
State of California
Real Estate Services Division
Project Management & Development Branch
707 Third Street, Suite 4-105
West Sacramento, California 95605

REGISTERED PROFESSIONAL ENGINEER
Scott C. McDonell
No. C-62154
CIVIL
STATE OF CALIFORNIA
7/11/22

DMV
State of California
Department of Motor Vehicles

Issue		
No.	Date	Description
1	9/2/22	

Project
SANTA MARIA FIELD OFFICE REPLACEMENT
2770 SANTA MARIA WAY
SANTA MARIA, CA 93455
SANTA BARBARA COUNTY
DEPT OF MOTOR VEHICLES

Supervisor	Designed	Drawn
E. VELAGIC	S. MCDONELL	S. MCDONELL

DSA App No. 03-121324
SFM Permit No. 21-S-0233-CP-ER

Sheet Title
CIVIL TYPICAL CONCRETE DETAILS

Project Number
DGS000000140725

Reference North
Sheet Scale AS NOTED
Sheet Number C512

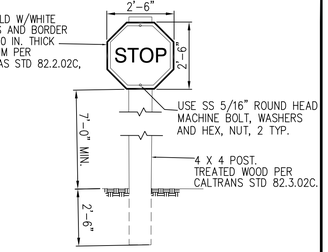

7 STOP SIGN — NTS

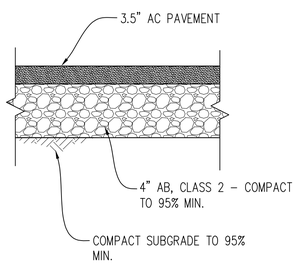

C02_AC02

8 ASPHALT CONCRETE PAVEMENT SECTION — NTS

NOTES:

1. AMERISTAR MONTAGE II, GENESIS STYLE SHOWN.
2. AN "OR EQUAL" PRODUCT SHALL BE SUBMITTED FOR PRE-APPROVAL PRIOR TO BID.
4. FOOTING SIZE PER GATE MANUFACTURE DESIGN PARAMETERS AS SPECIFIED.

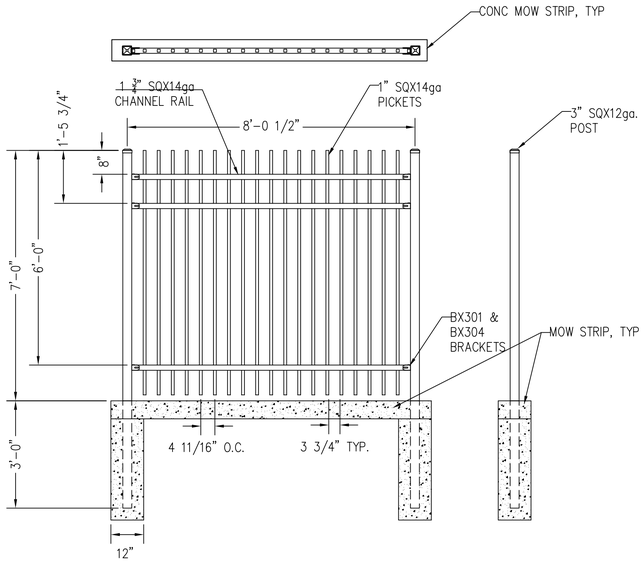

6 SECURITY FENCE — 1" = 3'

NOTE
A 10'-0" CLEARANCE SHOULD BE MAINTAINED FROM THE FURTHEST OUTSIDE POINT OF THE STRIPING TO ANY OBSTRUCTION WHEN POSSIBLE.

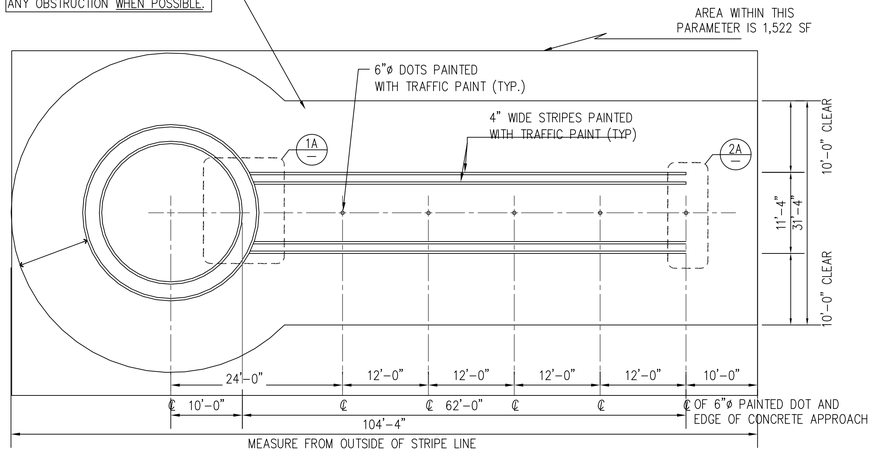

TOTAL AREA REQUIRED: 3,499 SF

MOTORCYCLE TESTING PATTERN VER.03
NOV 21/2005, BY AJG

4 MOTORCYCLE TESTING PATTERN — 1" = 10'

NOTES:

1. AMERISTAR PASSPORT II ROLLING GATE OR EQUAL. DESIGNED TO MEET ASTM F2200 REQUIREMENTS.
2. REQUIRED SAFETY MESH NOT SHOWN FOR CLARITY.
3. FOOTING SIZE PER GATE MANUFACTURE DESIGN PARAMETERS AS SPECIFIED.
4. NORTH ENTRANCE DOUBLE GATE SHALL INCLUDE MINIMUM TWO 17' GATES TO CREATE A 32' CLEAR OPENING.
5. SOUTH ENTRANCE DOUBLE GATE SHALL INCLUDE MINIMUM 21' GATES TO CREATE A 40' CLEAR OPENING.

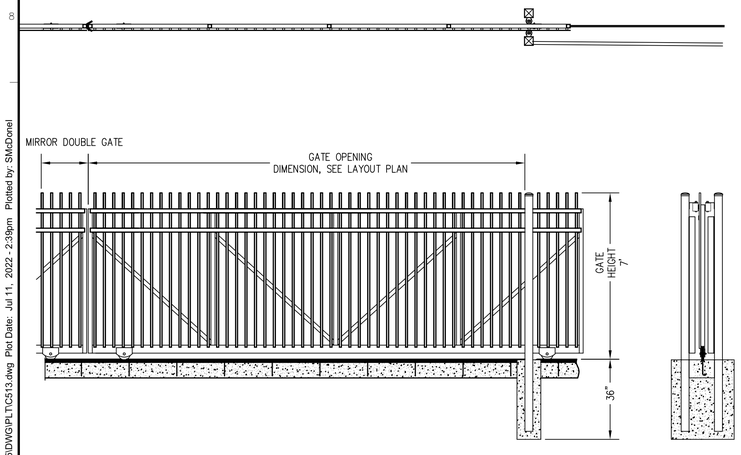

9 VEHICLE GATE — 1" = 3'

NOTES:

1. GATE TO BE CUSTOM FABRICATED WELDED STEEL STRUCTURE. GALVANIZE AFTER FABRICATION AND POWDER COAT GLOSS BLACK.
2. INSTALL COMPONENTS WITH STAINLESS STEEL FASTENERS.
3. SUBMIT SHOP DRAWINGS FOR STATE APPROVAL

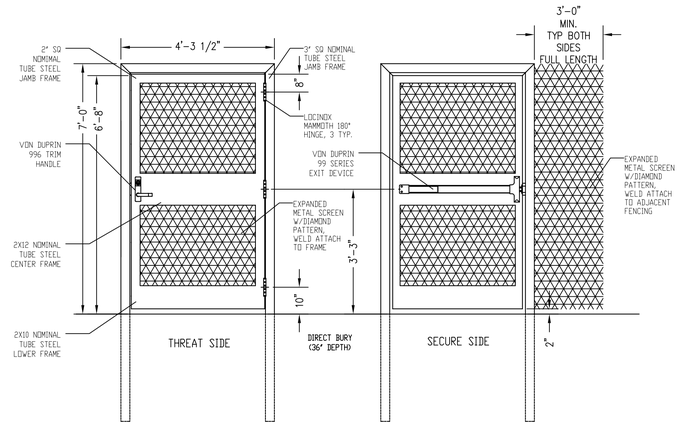

5 PEDESTRIAN GATE — N.T.S.

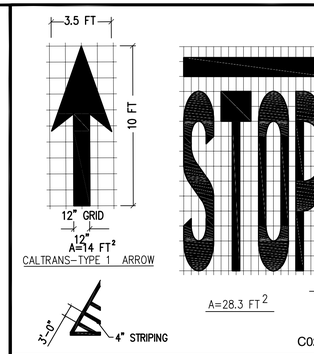

C02_AC09

2 PAVEMENT MARKING — N.T.S

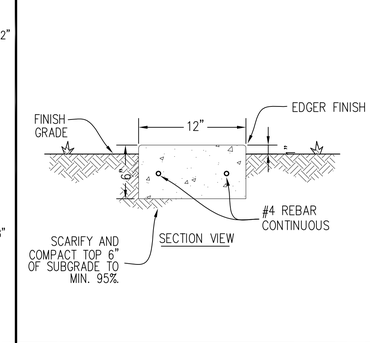

1 CONC MOW STRIP — 1 1/2" = 1'-0"

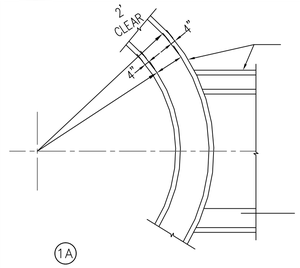

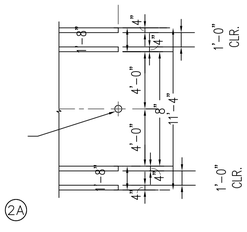

3 MOTORCYCLE TESTING PATTERN DETAIL — 1" = 1'

IDENTIFICATION STAMP
DIV. OF THE STATE ARCHITECT
APP: 03-121324 INC: A
REVIEWED FOR
SS ☐ FLS ☐ ACS ☑
DATE: 09/14/2022

OFFICE OF THE STATE FIRE MARSHAL
APPROVED FIRE AND PANIC ONLY
09/07/22
21-0233
Approval of this plan does not authorize or approve any omission or deviation from applicable regulations. Final approval is subject to field inspection. One set of approved plans shall be available on the project site at all times.

DGS GENERAL SERVICES
Department of General Services
Architecture & Engineering Sections
State of California
Real Estate Services Division
Project Management & Development Branch
707 Third Street, Suite 4-105
West Sacramento, California 95605

REGISTERED PROFESSIONAL ENGINEER
SCOTT C. McDONELL
No. C-62154
CIVIL
STATE OF CALIFORNIA
7/11/22

DMV
State of California
Department of Motor Vehicles

Issue		
No.	Date	Description
1	9/2/22	

Project
SANTA MARIA FIELD OFFICE REPLACEMENT
2770 SANTA MARIA WAY
SANTA MARIA, CA 93455
SANTA BARBARA COUNTY

DEPT OF MOTOR VEHICLES

Supervisor	Designed	Drawn
E. VELAGIC	S. MCDONELL	S. MCDONELL

DSA App No.	SFM Permit No.
03-121324	21-S-0233-CP-ER

Sheet Title
CIVIL TYPICAL DETAILS

Project Number
DGS000000140725

Reference North | Sheet Scale: AS NOTED | Sheet Number: C513

Copyright © 2022, California Department of General Services - Real Estate Services Division

CAD File: X:\Projects\14xxxx\140725\DWG\PLTC\513.dwg Plot Date: Jul 11, 2022 - 2:39pm Plotted by: SMcDonel

RELATIVE BORDER SCALE IN INCHES 0 1 2 3

NOTES:
1. BUILDING PAD SUBGRADE REQUIREMENTS SHOWN ARE FOR ALL STRUCTURES AND PAVEMENTS WITHIN UNDOCUMENTED FILLS. UNDOCUMENTED FILL (POTENTIAL EXTENTS AS SHOWN IN STATE'S GEOTECHNICAL REPORT) REQUIRES A MINIMUM OF 3.5' OVER-EXCAVATION EXTENDING 5' BEYOND STRUCTURES AND PAVEMENTS.
2. REFERENCE STATE'S GEOTECHNICAL REPORT FOR GRADING REQUIREMENTS AND PROPERTIES OF ENGINEERED FILL.
3. ENGINEERED FILL SHALL BE PLACED IN 8" LIFTS MAXIMUM AND COMPACTED TO A MINIMUM OF 90% BELOW STRUCTURES AND 95% BELOW PAVEMENTS AS NOTED IN STATE'S GEOTECHNICAL REPORT.

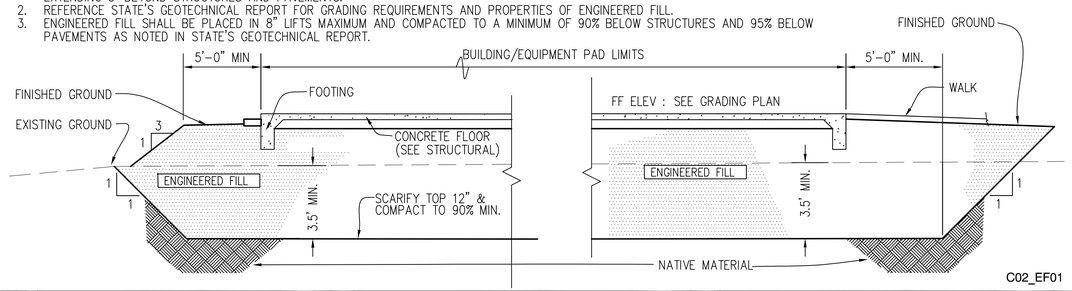

6 BUILDING PAD & PAVEMENTS WITHIN UNDOCUMENTED FILL — NO SCALE

MOUNT TO CONCRETE SURFACE W/CORROSION PROTECTION TAPE AND SS ANCHORS. EXACT LOCATION TO BE APPROVED BY STATE PRIOR TO ANCHORING.

MOUNT TO CONCRETE SURFACE W/SS ANCHORS. EXACT LOCATION TO BE APPROVED BY STATE PRIOR TO ANCHORING.

NOTES:
1. PROVIDE BELSON OUTDOOR PRODUCT (800-323-5664, WWW.BELSON.COM) L1439 & L1440 OR APPROVED EQUAL.
2. COLOR GRAY.

3 COATED ALUMINUM/STEEL BENCH AND TRASH COMBO — NTS

NOTE:
1. SEE DETAIL 9/C512 FOR CONTROL JOINTS. PLACE EXPANSION JOINTS EVERY 50' MAX. INTERVAL AND CONTRACTION JOINTS EVERY 5' MAX. INTERVAL.

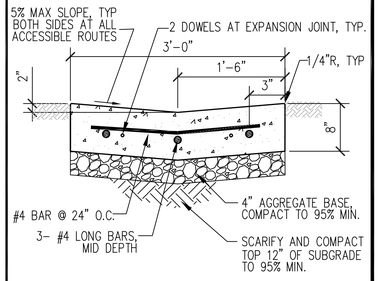

5 CONC. V-GUTTER — NTS

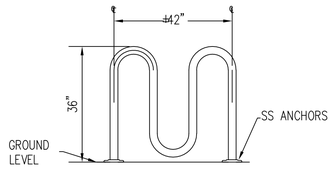

NOTES:
1. PROVIDE BELSON OUTDOOR PRODUCT (800-323-5664, WWW.BELSON.COM) CBBR-9UR-SS OR APPROVED EQUAL.

4 BIKE RACK — *N.T.S.*

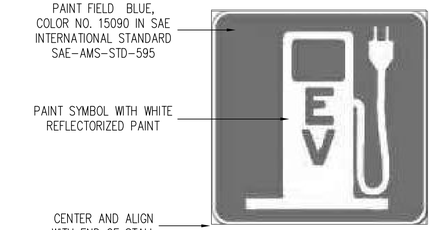

G66-21B (CA) 30"X30"

1 CA STANDARD ELEC VEHICLE SYMBOL MARKING — 1" = 1'-0"

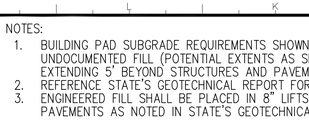

DETAIL A
48"X18" HORIZONTAL
BLACK 1" BORDER AND 6"
TEXT ON WHITE BACKGROUND

DETAIL B
36"X24" HORIZONTAL
BLACK 1/2" BORDER AND 4"
TEXT ON WHITE BACKGROUND

DETAIL C
36"X24" HORIZONTAL
BLACK 1/2" BORDER AND 4"
TEXT ON WHITE BACKGROUND

DETAIL D
36"X24" HORIZONTAL
BLACK 1/2" BORDER AND 4"
TEXT ON WHITE BACKGROUND

DETAIL E
24"X18" HORIZONTAL
BLACK 1/2" BORDER AND 4"
TEXT ON WHITE BACKGROUND

DETAIL F
18"X24" VERTICAL
BLACK 1/2" BORDER AND 3"
TEXT ON WHITE BACKGROUND

DETAIL G
18"X24" VERTICAL
BLACK 1/2" BORDER AND 3"
TEXT ON WHITE BACKGROUND

NOTE:
1. LOCATION OF SIGN SHALL NOT OBSTRUCT PASSAGE FROM PARKING ACCESS ISLE OR ANY WALKWAYS.
2. REFLECTORIZED SIGN PANEL – 0.08" MINIMUM ALUMINUM SHEET, ASTM D4956 TYPE III OR IV. ROUND AND SMOOTH ALL EDGES. COLORS SHALL MEET CA STANDARD SIGNAGE AS INDICATED OR AS DESCRIBED HERE.
3. SIGNS SHALL BE MOUNTED ON POSTS PER DETAIL 5/C511 OR AS DESCRIBED HERE. USE SINGLE POST FOR SIGNS 24" WIDE OR LESS AND DOUBLE POST FOR SIGNS GREATER THAN 24".

DETAIL I
24"X18" HORIZONTAL
G93-C (CA)

DETAIL J
12"X18" VERTICAL
S34 (CA)

DETAIL K
24"X24"
NO STRAIGHT THROUGH
R3-27 (CA)

DETAIL L
24"X24"
NO RIGHT TURN
R3-1 (CA)

DETAIL M
16"X12"
DMV LOGO W/
BLACK 1/2"
BORDER, 1" AND
1/2" TEXT
ON WHITE
BACKGROUND

2 STANDARD EXTERIOR DMV AND STANDARD CA PARKING/REGULATORY SIGNS ON POST — 1" = 1'-0"

IDENTIFICATION STAMP
DIV. OF THE STATE ARCHITECT
APP: 03-121324 INC: A
REVIEWED FOR
SS ☐ FLS ☐ ACS ☑
DATE: 09/14/2022

OFFICE OF THE STATE FIRE MARSHAL
APPROVED FIRE AND PANIC ONLY
09/07/22
21-0233
Approval of this plan does not authorize or approve any omission or deviation from applicable regulations. Final approval is subject to field inspection. One set of approved plans shall be available on the project site at all times.

DGS GENERAL SERVICES
Department of General Services
Architecture & Engineering Sections
State of California
Real Estate Services Division
Project Management & Development Branch
707 Third Street, Suite 4-105
West Sacramento, California 95605

REGISTERED PROFESSIONAL ENGINEER
Scott C. McDonell
No. C-62154
CIVIL
STATE OF CALIFORNIA

DMV
State of California
Department of Motor Vehicles

Issue

No.	Date	Description
1	9/2/22	

Project
SANTA MARIA FIELD OFFICE REPLACEMENT
2770 SANTA MARIA WAY
SANTA MARIA, CA 93455
SANTA BARBARA COUNTY
DEPT OF MOTOR VEHICLES

Supervisor	Designed	Drawn
E.VELAGIC	S.MCDONELL	S.MCDONELL

DSA App No. 03-121324
SFM Permit No. 21-S-0233-CP-ER

Sheet Title
MICELLANEOUS DETAILS

Project Number
DGS000000140725

Reference North
Sheet Scale AS NOTED
Sheet Number C514

Copyright © 2022, California Department of General Services - Real Estate Services Division

CAD File: X:\Projects\140xxx\140725\DWG\PLT\C514 CIVIL TYPICAL DETAILS.dwg Plot Date: Jun 23, 2022 - 3:03pm Plotted by: SMcDonell

RELATIVE BORDER SCALE IN INCHES 0 1 2 3

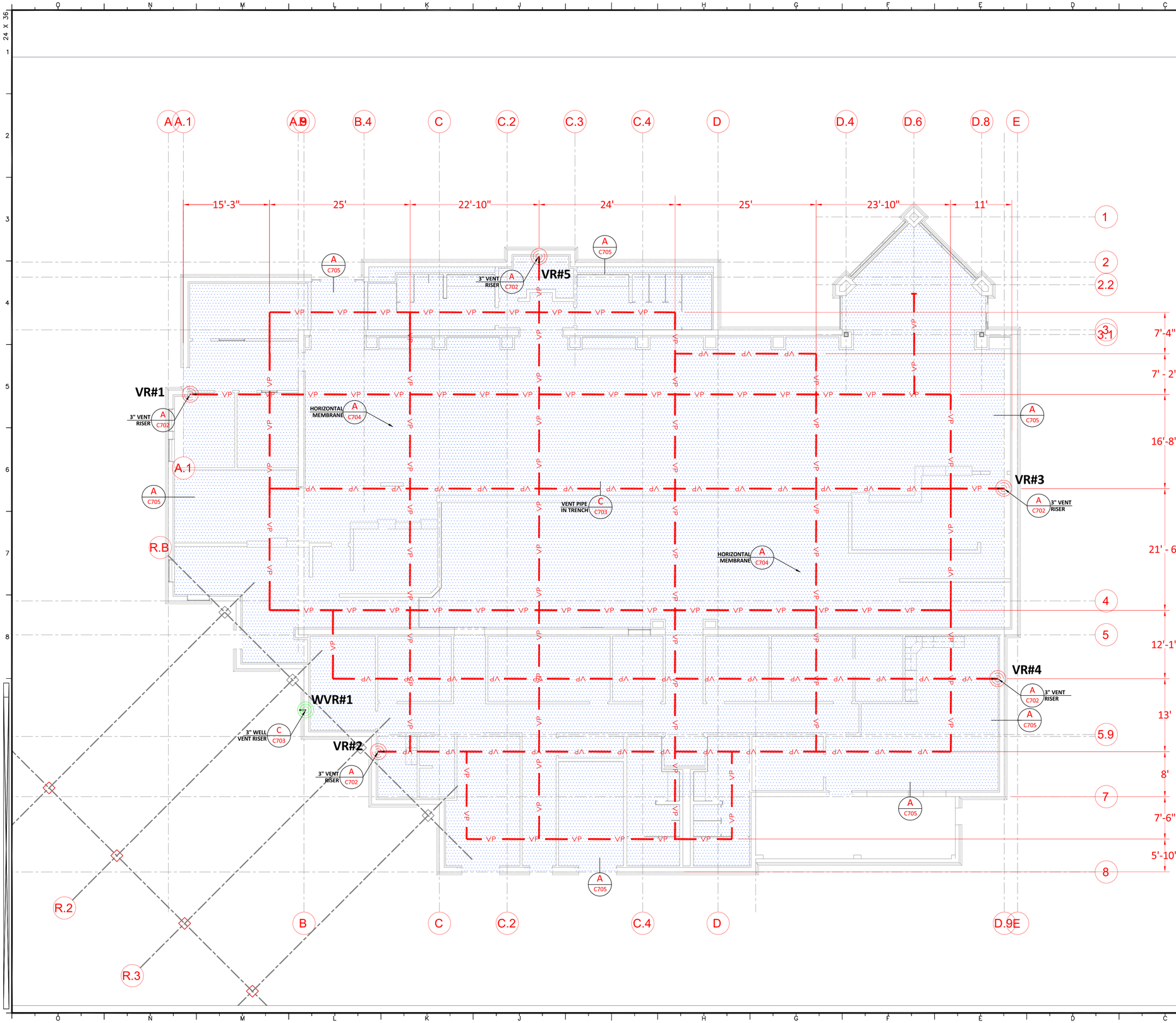

NOTES

1. PRIOR TO TRENCHING, CONTRACTOR SHALL VERIFY VENT RISER LOCATIONS WITH BUILDING CONTRACTOR & ARCHITECT FOR STRUCTURAL FRAMING, DOOR AND WINDOW LOCATIONS.
2. VENT PIPING MAY BE FIELD LOCATED TO COINCIDE WITH UTILITY TRENCHES, WITH APPROVAL OF ARCHITECT.
3. VENT RISERS MAY BE FIELD ADJUSTED TO AVOID DOORS, WINDOWS, OR OTHER ARCHITECTURAL INTERFERENCE.
4. INTERIOR SIDE OF FOOTINGS NEED TO BE TROWELED SMOOTH FOR THE METHANE BARRIER TERMINATIONS.
5. FIELD SITUATIONS NOT SPECIALLY DETAILED SHALL BE HANDLED PER THE INTENT OF THESE PLANS AND SPECIFICATIONS WITH THE APPROVAL OF METHANE SPECIALISTS. CONTRACTOR MAY SUBMIT SHOP DRAWINGS FOR ALTERNATIVE METHODS, WHICH MAY BE APPROVED IF THEY REPRESENT NO ADDITIONAL COST TO THE OWNER.
6. BUILDING DIMENSIONS ARE APPROXIMATE AND PROVIDED BY OTHERS.
7. THE UPPER SURFACE OF THE GAS MEMBRANE BARRIER SHALL BE PROTECTED BY A MINIMUM 2" SAND LAYER OR 2" THICK LEAN CONCRETE PLACED BETWEEN THE FLOOR SLAB AND THE MEMBRANE.
8. NO VENT RISER SHALL BE INSTALLED WITHIN 10 FT. OF THE EXTREME OUTSIDE EDGE OF A FIRE PLACE.

GENERAL NOTES

BUILDING FOOTPRINT: APPROX. 13,342 SQ. FT.

PROVIDED 5 VENT RISERS FOR SPACING

LEGEND

MEMBRANE LIMITS

VENT PIPE

VR#5 VENT RISER

WVR#1 OIL WELL VENT RISER

N

0' 4' 8' 16'

IDENTIFICATION STAMP
DIV. OF THE STATE ARCHITECT
APP: 03-121324 INC:
REVIEWED FOR
SS ☐ FLS ☐ ACS ☑
DATE: 09/14/2022

OFFICE OF THE STATE FIRE MARSHAL
APPROVED FIRE AND PANIC ONLY
09/07/22
21-0233
Approval of this plan does not authorize or approve any omission or deviation from applicable regulations. Final approval is subject to field inspection. One set of approved plans shall be available on the project site at all times.

DGS GENERAL SERVICES
Department of General Services
Architecture & Engineering Sections
State of California
Real Estate Services Division
Project Management & Development Branch
707 Third Street, Suite 4-105
West Sacramento, California 95605

REGISTERED PROFESSIONAL ENGINEER
C-31416
exp. 12-31-22
CIVIL
STATE OF CALIFORNIA

METHANE SPECIALISTS
5210 LEWIS ROAD
SUITE 1
AGOURA HILLS, CA
91301
TEL: 805.987.0104
www.methanespecialists.com

Issue

No.	Date	Description
1	9/2/22	

Project
SANTA MARIA FIELD OFFICE REPLACEMENT
2770 SANTA MARIA WAY
SANTA MARIA, CA 93455
SANTA BARBARA COUNTY
DEPT OF MOTOR VEHICLES

Supervisor	Designed	Drawn
K. ARRIOLA	J. KASONDRA	J. KASONDRA

DSA App No.	SFM Permit No.
03-121324	21-S-0233-CP-ER

Sheet Title
SUB-SLAB VENT PIPE & MEMBRANE PLAN

Project Number
DGS000000140725

Reference North

Sheet Scale

Sheet Number
C701

Copyright © 2020, California Department of General Services - Real Estate Services Division

RELATIVE BORDER SCALE IN INCHES

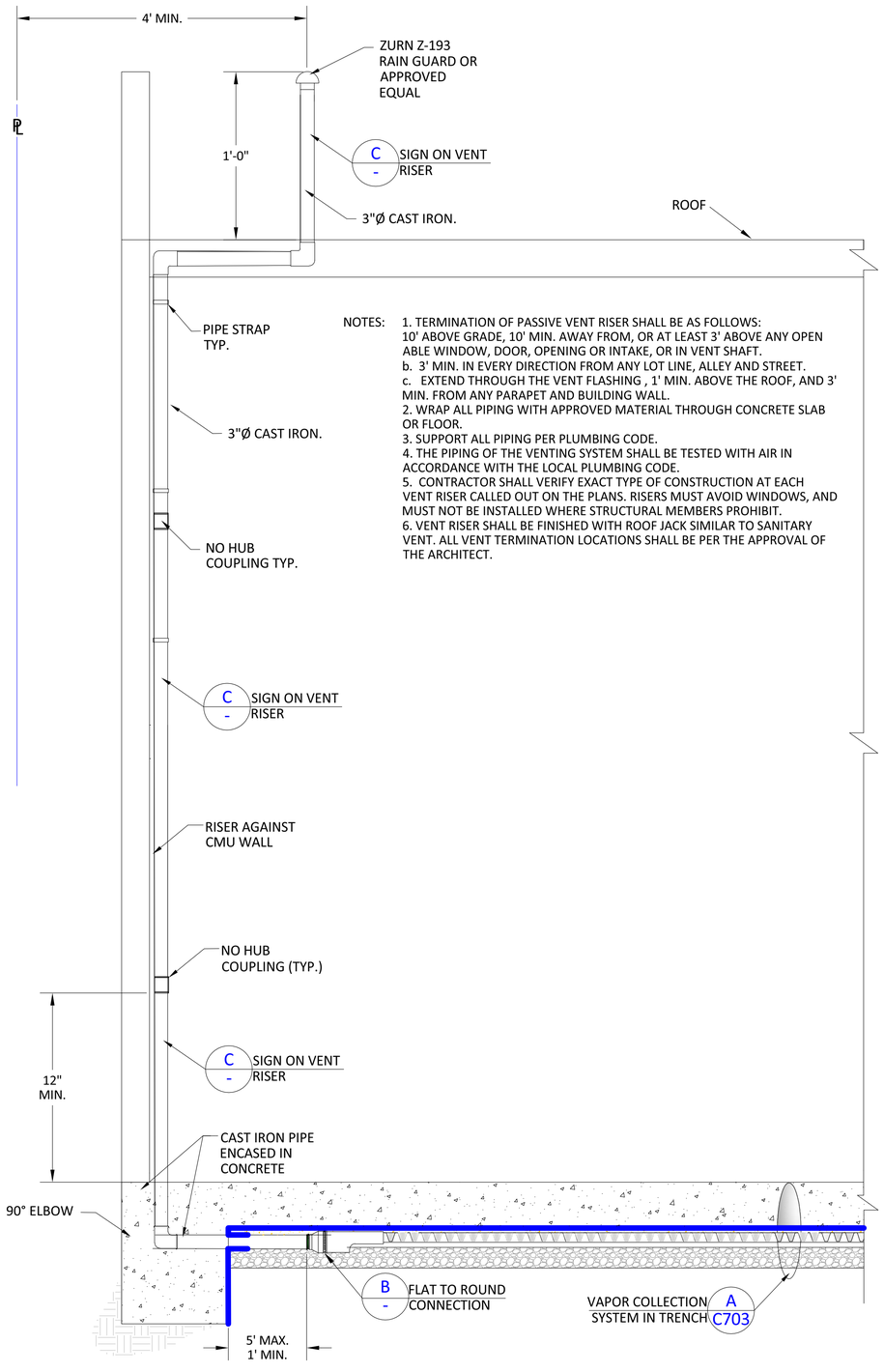

NOTES:
1. TERMINATION OF PASSIVE VENT RISER SHALL BE AS FOLLOWS:
10' ABOVE GRADE, 10' MIN. AWAY FROM, OR AT LEAST 3' ABOVE ANY OPEN ABLE WINDOW, DOOR, OPENING OR INTAKE, OR IN VENT SHAFT.
b. 3' MIN. IN EVERY DIRECTION FROM ANY LOT LINE, ALLEY AND STREET.
c. EXTEND THROUGH THE VENT FLASHING , 1' MIN. ABOVE THE ROOF, AND 3' MIN. FROM ANY PARAPET AND BUILDING WALL.
2. WRAP ALL PIPING WITH APPROVED MATERIAL THROUGH CONCRETE SLAB OR FLOOR.
3. SUPPORT ALL PIPING PER PLUMBING CODE.
4. THE PIPING OF THE VENTING SYSTEM SHALL BE TESTED WITH AIR IN ACCORDANCE WITH THE LOCAL PLUMBING CODE.
5. CONTRACTOR SHALL VERIFY EXACT TYPE OF CONSTRUCTION AT EACH VENT RISER CALLED OUT ON THE PLANS. RISERS MUST AVOID WINDOWS, AND MUST NOT BE INSTALLED WHERE STRUCTURAL MEMBERS PROHIBIT.
6. VENT RISER SHALL BE FINISHED WITH ROOF JACK SIMILAR TO SANITARY VENT. ALL VENT TERMINATION LOCATIONS SHALL BE PER THE APPROVAL OF THE ARCHITECT.

VENT RISER (TYPICAL) A

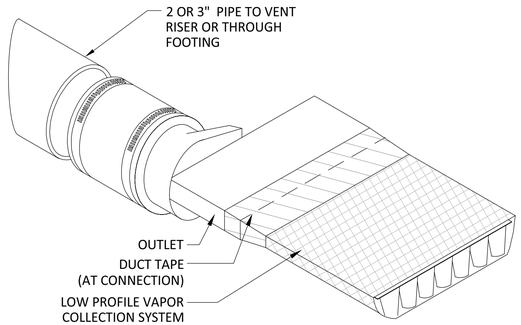

FLAT TO ROUND PIPE CONNECTION B

CAUTION

METHANE GAS IN PIPE NO SMOKING OR ELECTRICAL EQUIPMENT WITHIN 10'

3" X 4" WIDE, ALL SIGNS PLASTIC WITH ADHESIVE BACKING, LARGE LETTERS MIN. 1/2" HIGH BLACK LETTERS ON WHITE BACKGROUND.

THIS SIGN SHALL BE POSTED ON EACH VENT RISER AT FIVE FOOT (5') INTERVALS ALONG PIPE.

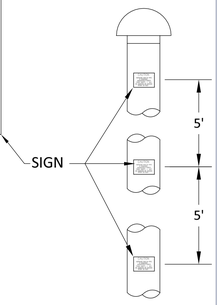

SIGN ON VENT RISER C

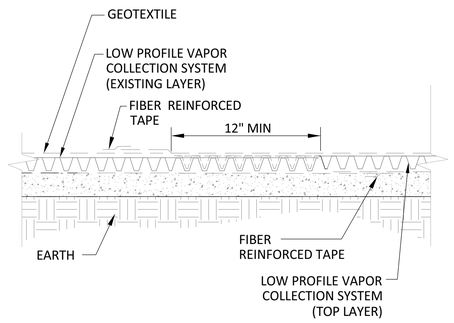

INTERLOCKING CONNECTIONS D

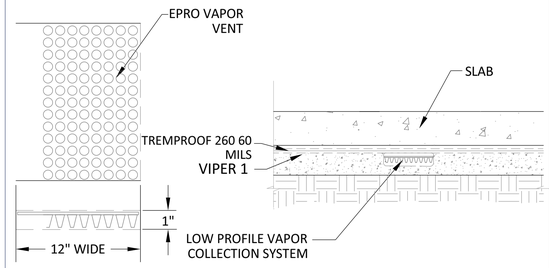

METHANE COLLECTION SYSTEM DETAIL E

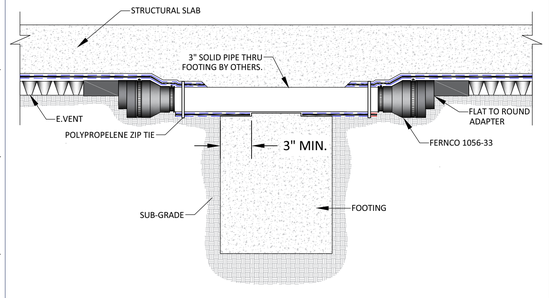

VENT PIPE THRU FOOTING (TYPICAL) F

IDENTIFICATION STAMP
DIV. OF THE STATE ARCHITECT
APP: 03-121324 INC:
REVIEWED FOR
SS ☐ FLS ☐ ACS ☑
DATE: 09/14/2022

OFFICE OF THE STATE FIRE MARSHAL
APPROVED FIRE AND PANIC ONLY
09/07/22
21-0233
Approval of this plan does not authorize or approve any omission or deviation from applicable regulations. Final approval is subject to field inspection. One set of approved plans shall be available on the project site at all times.

DGS GENERAL SERVICES
Department of General Services
Architecture & Engineering Sections
State of California
Real Estate Services Division
Project Management & Development Branch
707 Third Street, Suite 4-105
West Sacramento, California 95605

REGISTERED PROFESSIONAL ENGINEER
JAY N. ARRIOLA
C-31416
exp. 12-31-22
CIVIL
STATE OF CALIFORNIA

METHANE SPECIALISTS
5210 LEWIS ROAD
SUITE 5
AGOURA HILLS, CA
91301
TEL 805.987.0146
www.methanespecialists.com

Issue		
No.	Date	Description
1	9/2/22	

Project
SANTA MARIA FIELD OFFICE REPLACEMENT
2770 SANTA MARIA WAY
SANTA MARIA, CA 93455
SANTA BARBARA COUNTY

DEPT OF MOTOR VEHICLES

Supervisor	Designed	Drawn
K. ARRIOLA	J. KASONDRA	J. KASONDRA

DSA App No.	SFM Permit No.
03-121324	21-S-0233-CP-ER

Sheet Title
SUB-SLAB VENT PIPE DETAILS

Project Number
DGS000000140725

Reference North | Sheet Scale

Sheet Number
C702

Copyright © 2020, California Department of General Services - Real Estate Services Division

RELATIVE BORDER SCALE IN INCHES 0 1 2 3

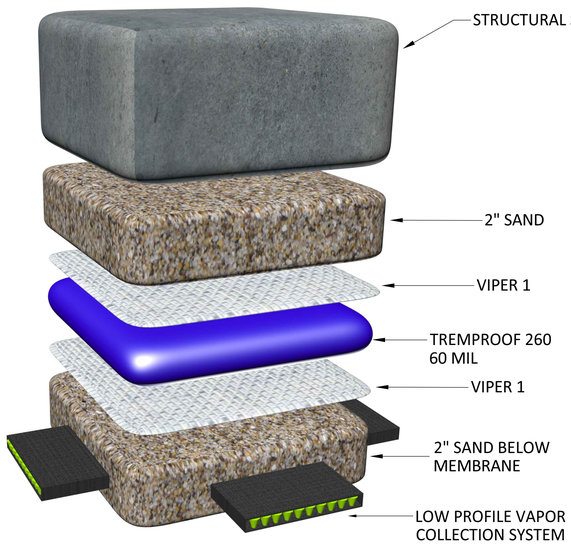

NOT TO SCALE

VENTING SYSTEM A

NOTES:
1. CONTRACTOR SHALL VERIFY EXACT TYPE OF CONSTRUCTION AT EACH VENT RISER CALLED OUT ON THE PLANS. RISERS MUST AVOID WINDOWS, AND MUST NOT BE INSTALLED WHERE STRUCTURAL MEMBERS PROHIBIT.

2. DRY WALL SHALL NOT BE INSTALLED WITH OUT METHANE SIGN INSPECTION.

3. AIR TEST AT 5PSIG FOR 15 MINUTES. TEST FROM TEST TEE THRU ROOF VIA PRESSURE GUAGE LOCATED AT ROOF VENT.

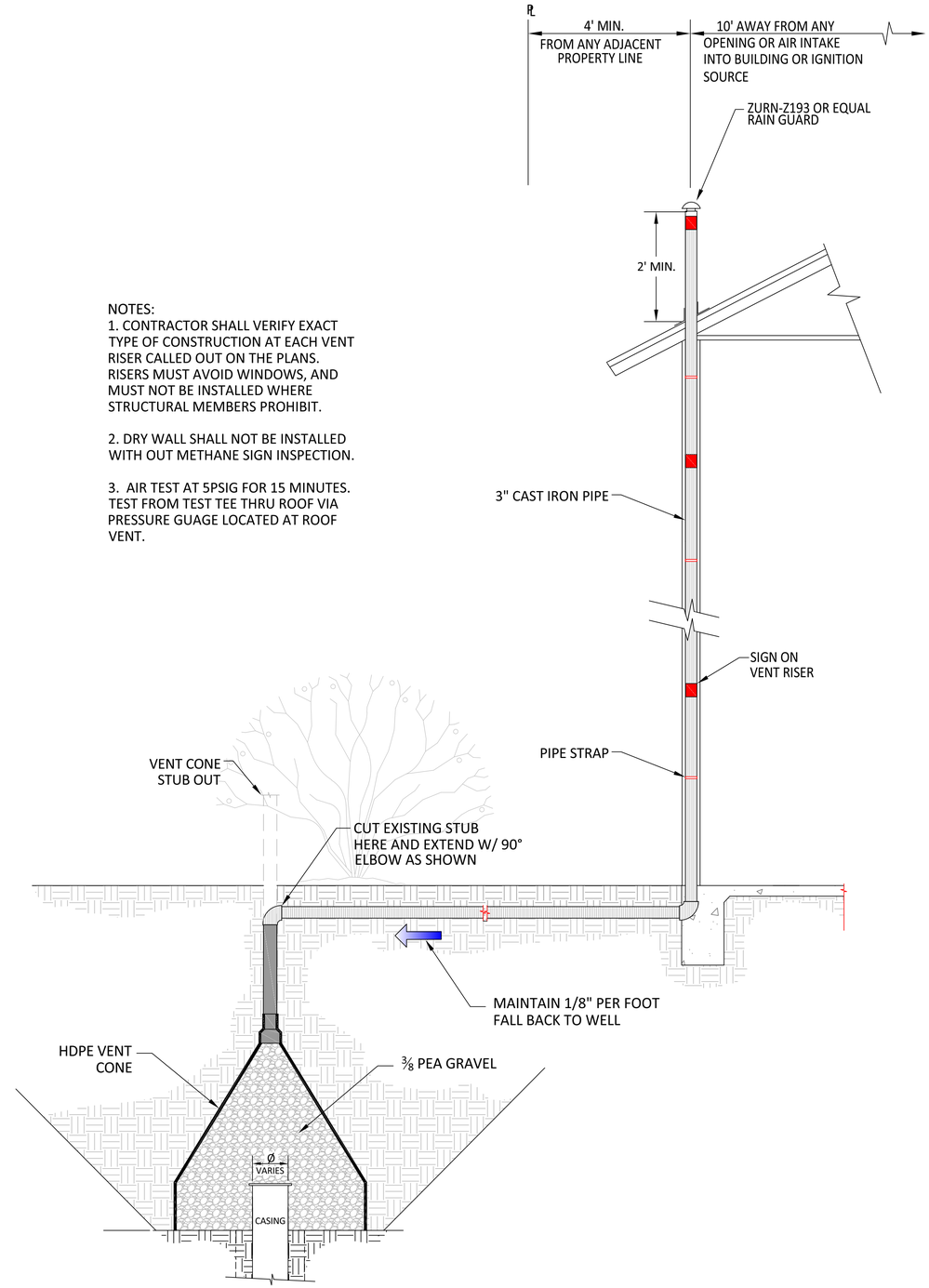

NO DETAIL B

OIL WELL VENTING C

IDENTIFICATION STAMP
DIV. OF THE STATE ARCHITECT
APP: 03-121324 INC:
REVIEWED FOR
SS ☐ FLS ☐ ACS ☑
DATE: 09/14/2022

OFFICE OF THE STATE FIRE MARSHAL
APPROVED FIRE AND PANIC ONLY
09/07/22
21-0233
Approval of this plan does not authorize or approve any omission or deviation from applicable regulations. Final approval is subject to field inspection. One set of approved plans shall be available on the project site at all times.

DGS GENERAL SERVICES
Department of General Services
Architecture & Engineering Sections
State of California
Real Estate Services Division
Project Management & Development Branch
707 Third Street, Suite 4-105
West Sacramento, California 95605

REGISTERED PROFESSIONAL ENGINEER
JAY N. ARRIOLA
C-31416
exp. 12-31-22
CIVIL
STATE OF CALIFORNIA

METHANE SPECIALISTS
5210 LEWIS ROAD
SUITE 1
AGOURA HILLS, CA
91301
TEL: 805.987.5356
www.methanespecialists.com

Issue

No.	Date	Description
1	9/2/22	

Project
SANTA MARIA FIELD
OFFICE REPLACEMENT

2770 SANTA MARIA WAY
SANTA MARIA, CA 93455
SANTA BARBARA COUNTY

DEPT OF MOTOR VEHICLES

Supervisor	Designed	Drawn
K. ARRIOLA	J. KASONDRA	J. KASONDRA

DSA App No.	SFM Permit No.
03-121324	21-S-0233-CP-ER

Sheet Title
SUB-SLAB VENT PIPE DETAILS

Project Number
DGS000000140725

Reference North | Sheet Scale

Sheet Number
C703

Copyright© 2020, California Department of General Services - Real Estate Services Division

RELATIVE BORDER SCALE IN INCHES 0 1 2 3

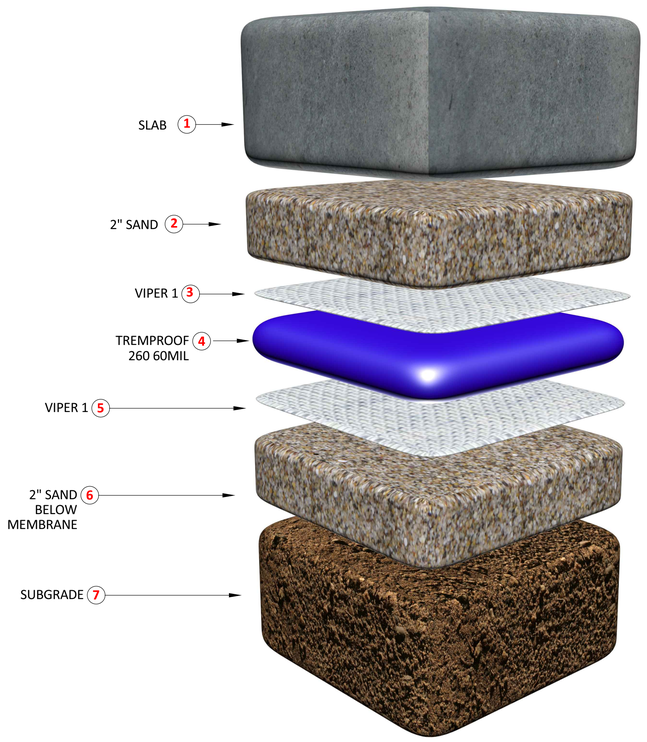

NOTES:
1. THE IMPERVIOUS MEMBRANE SHALL BE PLACED ON THE EXTERIOR SURFACE OF WALLS FROM THE FINISHED GRADE LEVEL TO A MINIMUM OF 6 INCHES BELOW THE BOTTOM OF THE ADJOINING BUILDING SLAB.
2. THE UPPER SURFACE OF THE GAS MEMBRANE BARRIER SHALL BE PROTECTED BY A MINIMUM 2" SAND LAYER OR 1" THICK LEAN CONCRETE PLACED BETWEEN THE FLOOR SLAB AND THE MEMBRANE.
3. REINFORCING STEEL, PIPING, FORMS, ETC. SHALL NOT BE SUPPORTED DIRECTLY ON THE MEMBRANE OR PROTECTIVE COVERING AND EQUIPMENT SHALL NOT BE DRIVEN OVER THE MEMBRANE OR ITS PROTECTIVE COVERING.

HORIZONTAL MEMBRANE A

NOTE: ALL MEMBRANE SHALL BE CLEANED WITH SOFT BRUSH AND WATER PRIOR TO SPRAYING LAP JOINTS.

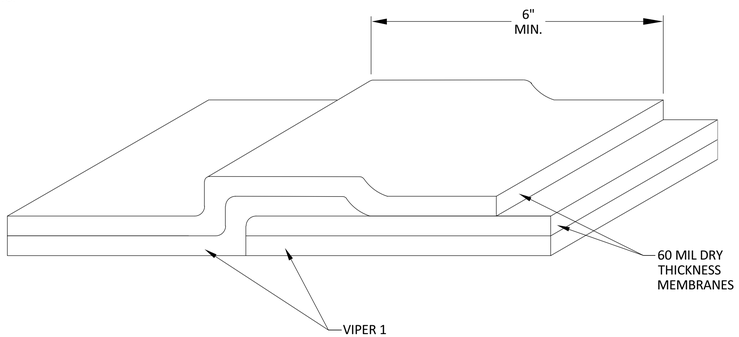

MEMBRANE LAP B

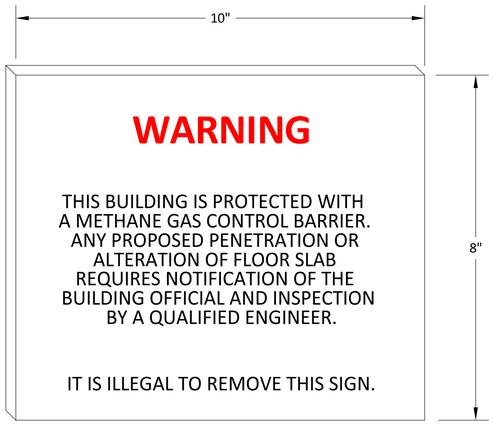

NOTES:
1. THIS NOTIFICATION IS TO BE PERMANENTLY STAMPED OR ETCHED IN THE SURFACE OF THE GARAGE SLAB OR OTHER LOCATION APPROVED BY THE BUILDING INSPECTOR AT THE TIME OF CONSTRUCTION.
2. ALL LETTERS $\frac{1}{2}$" (MIN.) IN HEIGHT.
3. AT LEAST ONE REQUIRED PER BUILDING.
4. THIS NOTIFICATION SHALL BE POSTED AND MAINTAINED AT THE FRONT ENTRANCE OF THE BUILDING, EXCEPT RESIDENTIAL BUILDINGS.

SIGN IN BUILDING C

THIS DETAIL TO BE USED **ONLY** WITH PRIOR APPROVAL OF THE METHANE ENGINEER.

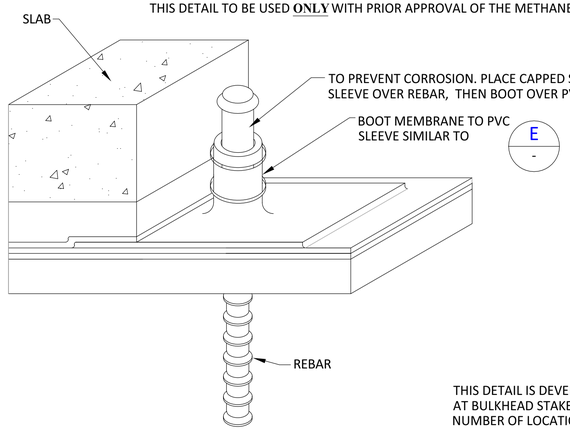

THIS DETAIL IS DEVELOPED TO SATISFY FIELD CONDITIONS AT BULKHEAD STAKES. CONTRACTOR SHALL VERIFY NUMBER OF LOCATIONS PER HOME PAD.

REBAR PENETRATION D

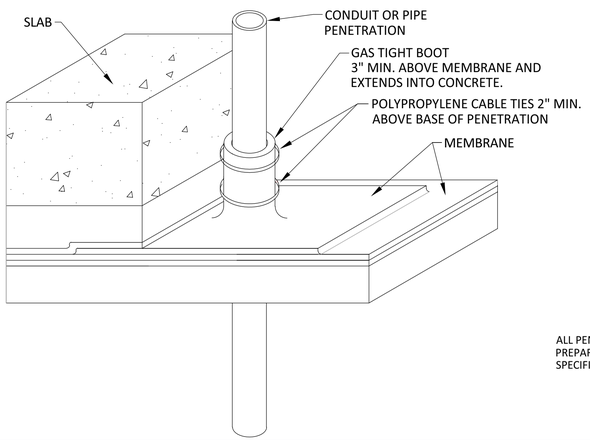

ALL PENETRATIONS TO BE BOOTED SHALL BE PREPARED CLEAN PER MANUFACTURER SPECIFICATIONS BEFORE BOOT IS APPLIED.

MEMBRANE BOOT E

THE MEMBRANE SHIELD MATERIAL SHALL BE A MINIMUM 60 MIL TREMPROOF 260.

A. INSTALLATION

THE MEMBRANE SHALL BE PLACED BETWEEN THE BOTTOM OF 2" SAND LAYER AND THE TOP OF 2" SAND LAYER, AROUND OR FASTENED TO FOOTINGS AND PITS PER THESE PLANS AND DETAILS. THE SHIELDING SHALL NOT BE PLACED MORE THAN 6-INCHES BELOW THE BOTTOM OF THE FLOOR SLAB. SEAMS SHALL BE LAPPED A MINIMUM OF 6-INCHES AND SEALED IN ACCORDANCE WITH THE MEMBRANE MANUFACTURER'S WRITTEN SPECIFICATIONS.

PRIOR TO PLACING THE FLOOR SLAB OVER THE MEMBRANE, THE METHANE ENGINEER/SPECIAL INSPECTOR SHALL HAVE INSPECTED THE MEMBRANE IN ACCORDANCE WITH THESE SPECIFICATIONS AND ANY REPAIRS SHALL HAVE BEEN MADE BY CONTRACTOR.

B. PENETRATIONS OF THE MEMBRANE

WHERE FOOTINGS, PLUMBING PIPES, ELECTRICAL CONDITIONS, ETC. PENETRATE THE MEMBRANE, SLEEVES OR BOOTS COMPOSED OF THE SAME SHIELDING MATERIAL OR OTHER APPROVED MATERIAL SHALL BE PROVIDED TO SEAL THE SPACE AROUND THE PENETRATIONS. THESE DEVICES ARE TO BE BONDED TO THE MEMBRANE MATERIAL AND SEALED AROUND THE PENETRATION WITH AN APPROVED SEALANT OR OTHER APPROVED METHOD IN ACCORDANCE WITH THE MANUFACTURER'S SPECIFICATIONS.

C. PROTECTION OF THE MEMBRANE

THE SUBGRADE UNDER THE MEMBRANE SHALL BE ROLLED SMOOTH AND WELL COMPACTED. ANGULAR MATERIAL SUCH AS ROCKS AND STONES SHALL BE COVERED BY A MINIMUM 2" SAND LAYER, OR ALTERNATE 10 OZ. GEOTEXTILE TO PREVENT PUNCTURE OF THE MEMBRANE.

THE MEMBRANE SHALL BE PROTECTED BY A MINIMUM 2" SAND, OR OTHER APPROVED MATERIAL PLACED BETWEEN THE FLOOR SLAB AND THE MEMBRANE, AS SPECIFIED ON THESE PLANS.

REINFORCING STEEL, PIPING, FORMS, ETC. SHALL NOT BE SUPPORTED DIRECTLY ON THE MEMBRANE ORPROTECTIVE COVERING AND EQUIPMENT SHALL NOT BE DRIVEN OVER THE MEMBRANE OR ITS PROTECTIVE COVERING.

D. SPECIAL INSPECTION

COMPLETE AND COMPREHENSIVE INSPECTION BY METHANE SPECIALISTS INSPECTOR SHALL BE PROVIDED FOR MEMBRANE SHIELD INSTALLATION.

FOUNDATION PROTECTION NOTES F

JOBS WITH METHANE CONTROL MEMBRANE ARE DIFFERENT THAN OTHER JOBS. THE METHANE CONTROL MEMBRANE IS DIFFERENT FROM SIMPLE WATERPROOFING, IN THAT IT MUST BE INSTALLED WITH SPECIAL INSPECTION AND TESTING. ANY DAMAGE DONE TO THE MEMBRANE AFTER IT HAS INITIALLY PASSED INSPECTION MUST BE REPAIRED, RETESTED, AND INSPECTED AGAIN. OBSERVING THE FOLLOWING PRECAUTIONS SHOULD MINIMIZE REPAIR COSTS.

GENERAL CONTRACTOR AND ALL SUBCONTRACTORS SHALL INSURE THAT NO DAMAGE IS DONE TO MEMBRANE SUBSEQUENT TO INITIAL INSTALLATION, INCLUDING PUNCTURING WITH TOOLS OR OTHERWISE, OR PLACING OR STORING MATERIAL OVER THE MEMBRANE, OR DRIVING EQUIPMENT OVER THE MEMBRANE WITHOUT ADEQUATE PROTECTION & THE APPROVAL OF METHANE SPECIALISTS.

PLUMBERS SHALL INSURE THAT ALL SUBSLAB PIPING AND DRAINS ARE IN PLACE PRIOR TO PLACING MEMBRANE, TO AVOID CUTTING MEMBRANE.

ELECTRICIANS SHALL INSURE THAT ALL SUBSLAB CONDUIT IS IN PLACE PRIOR TO PLACING MEMBRANE, TO AVOID CUTTING MEMBRANE.

CONCRETE WORKERS SHALL NOTE THAT CERTAIN CONCRETE WORKS NEED A SMOOTH TROWEL FINISH IN ORDER TO ALLOW MEMBRANE BATTENING TO THE CONCRETE. COORDINATE WITH THE MEMBRANE CONTRACTOR;

CONCRETE WORKERS SHALL AVOID CHIPPING CONCRETE FROM ABOVE DIRECTLY ONTO INSTALLED MEMBRANE BELOW;

WELDERS SHALL AVOID BURNING MEMBRANE BY PLACING A HEAT RESISTANT PROTECTIVE COVER OVER MEMBRANE MATERIAL.

GRADING OR OTHER SUBCONTRACTORS SHALL AVOID BURYING MEMBRANE TERMINATIONS THAT NEED TO BE ATTACHED TO LATER ON. COORDINATE WITH MEMBRANE CONTRACTOR.

CONCRETE SUBCONTRACTORS SHALL EXERCISE CAUTION IN PLACING REBAR IN MEMBRANED AREAS. REBAR CHAIRS SHALL NEVER BE PLACED DIRECTLY UPON MEMBRANE;

CONCRETE SUBCONTRACTORS SHALL NOT POUR OVER MEMBRANE WITHOUT SPECIFIC APPROVAL OF THE METHANE SPECIAL INSPECTOR, AND A COMPLETED CITY OF LOS ANGELES B94 FORM FOR THE AREA TO BE POURED. COORDINATE WITH MEMBRANE CONTRACTOR AND METHANE SPECIALISTS.

MEMBRANE PROTECTION NOTES G

IDENTIFICATION STAMP
DIV. OF THE STATE ARCHITECT
APP: 03-121324 INC:
REVIEWED FOR
SS ☐ FLS ☐ ACS ☑
DATE: 09/14/2022

OFFICE OF THE STATE FIRE MARSHAL
APPROVED FIRE AND PANIC ONLY
09/07/22
21-0233
Approval of this plan does not authorize or approve any omission or deviation from applicable regulations. Final approval is subject to field inspection. One set of approved plans shall be available on the project site at all times.

DGS GENERAL SERVICES
Department of General Services
Architecture & Engineering Sections
State of California
Real Estate Services Division
Project Management & Development Branch
707 Third Street, Suite 4-105
West Sacramento, California 95605

REGISTERED PROFESSIONAL ENGINEER
TROY N. ARRIOLA
C-31416
exp. 12-31-22
CIVIL
STATE OF CALIFORNIA

METHANE SPECIALISTS
5210 LEWIS ROAD
SUITE 1
AGOURA HILLS, CA
91301
TEL 805.987.5356
www.methanespecialists.com

Issue

No.	Date	Description
1	9/2/22	

Project
SANTA MARIA FIELD OFFICE REPLACEMENT
2770 SANTA MARIA WAY
SANTA MARIA, CA 93455
SANTA BARBARA COUNTY

DEPT OF MOTOR VEHICLES

Supervisor	Designed	Drawn
K. ARRIOLA	J. KASONDRA	J. KASONDRA

DSA App No. 03-121324
SFM Permit No. 21-S-0233-CP-ER

Sheet Title
SUB-SLAB MEMBRANE DETAILS

Project Number
DGS000000140725

Reference North
Sheet Scale
Sheet Number
C704

Copyright© 2020, California Department of General Services - Real Estate Services Division

RELATIVE BORDER SCALE IN INCHES 0 1 2 3

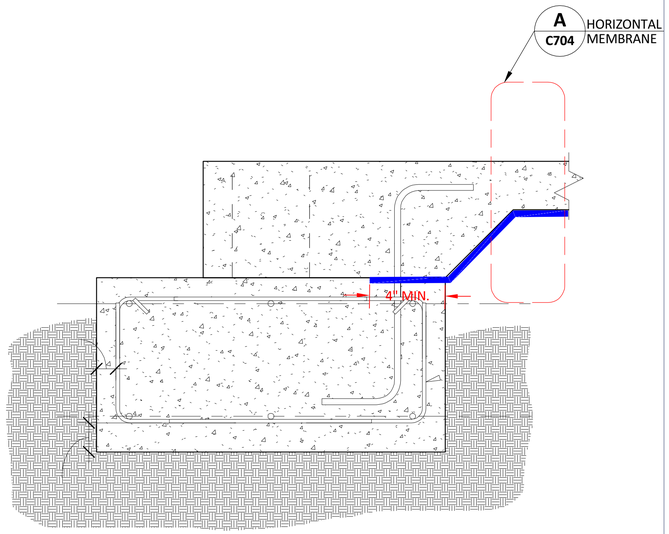

Impervious Membrane shall be installed at the following locations:

- Below the building slab surrounded by the inner face of the exterior footings
- On the exterior surface of walls from the finished grade level to a minimum of 6 inches below the bottom of the adjoining building slab
- Around sides of pile caps and caisson caps

NOT TO SCALE

MEMBRANE AT EXTERIOR FOOTING (TWO POUR) — A

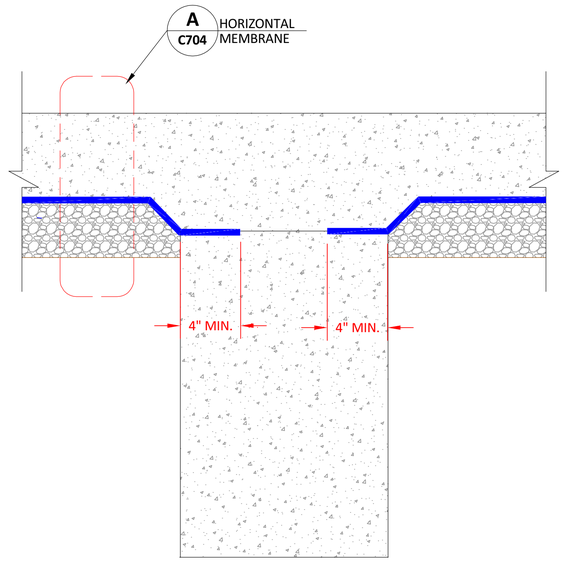

NOT TO SCALE

MEMBRANE AT INTERIOR FOOTING (TWO POUR) — B

NO DETAIL — C

NO DETAIL — D

NO DETAIL — E

NO DETAIL — F

RELATIVE BORDER SCALE IN INCHES 0 1 2 3

IDENTIFICATION STAMP
DIV. OF THE STATE ARCHITECT
APP: 03-121324 INC:
REVIEWED FOR
SS ☐ FLS ☐ ACS ☑
DATE: 09/14/2022

OFFICE OF THE STATE FIRE MARSHAL
APPROVED FIRE AND PANIC ONLY
09/07/22
21-0233
Approval of this plan does not authorize or approve any omission or deviation from applicable regulations. Final approval is subject to field inspection. One set of approved plans shall be available on the project site at all times.

DGS GENERAL SERVICES
Department of General Services
Architecture & Engineering Sections
State of California
Real Estate Services Division
Project Management & Development Branch
707 Third Street, Suite 4-105
West Sacramento, California 95605

REGISTERED PROFESSIONAL ENGINEER
JAY N. ARRIOLA
C-31416
exp. 12-31-22
CIVIL
STATE OF CALIFORNIA

METHANE SPECIALISTS
5210 LEWIS ROAD
SUITE 1
AGOURA HILLS, CA
91301
TEL: 805.987.5505
www.methanespecialists.com

Issue

No.	Date	Description
1	9/2/22	

Project
SANTA MARIA FIELD OFFICE REPLACEMENT
2770 SANTA MARIA WAY
SANTA MARIA, CA 93455
SANTA BARBARA COUNTY

DEPT OF MOTOR VEHICLES

Supervisor	Designed	Drawn
K. ARRIOLA	J. KASONDRA	J. KASONDRA

DSA App No. 03-121324
SFM Permit No. 21-S-0233-CP-ER

Sheet Title
SUB-SLAB MEMBRANE TERMINATION DETAILS

Project Number
DGS000000140725

Reference North

Sheet Scale

Sheet Number
C705

Copyright © 2020, California Department of General Services - Real Estate Services Division

SECTION 07 14 16 – COLD FLUID-APPLIED WATERPROOFING

PART 1 - GENERAL

1.1 SUMMARY

A. Section Includes:

1. Cold fluid-applied waterproofing, vertical.
2. [Drainage panels].

1.2 REFERENCES

A. References, General: Versions of the following standards current as of the date of issue of the project apply to the Work of this Section.

B. ASTM International (ASTM): www.astm.org:

1. ASTM C 836 – Standard Specification for High-Solids Content, Cold Liquid-Applied Elastomeric Waterproofing Membrane for Use with Separate Wearing Course
2. ASTM D903 - Standard Test Method for Peel or Stripping Strength of Adhesive Bonds
3. ASTM D412 – Standard Test Methods for Vulcanized Rubber and Thermoplastic Elastomers – Tension
4. ASTM E96/E96M – Standard Test Methods for Water Vapor Transmission of Materials
5. ASTM D4716 – Standard Test Method for Determining the (In-plane) Flow Rate per Unit Width and Hydraulic Transmissivity of a Geosynthetic Using a Constant Head
6. ASTM D4632 – Standard Test Method for Grab Breaking Load and Elongation of Geotextiles
7. ASTM D4833 – Standard Test Method for Index Puncture Resistance of Geomembranes and Related Products
8. ASTM D4751 – Standard Test Methods for Determining Apparent Opening Size of a Geotextile
9. ASTM D4491 – Standard Test Methods for Water Permeability of Geotextiles by Permittivity
10. ASTM D4355 – Standard Test Method for Deterioration of Geotextiles by Exposure to Light, Moisture and Heat in a Xenon Arc-Type Apparatus
11. ASTM D1777 – Standard Test Method for Thickness of Textile Materials
12. ASTM D1621 – Standard Test Method for Compressive Properties of Rigid Cellular Plastics

C. U. S. Environmental Protection Agency (EPA): www.epa.gov:

1. 40 CFR 59, Subpart D - National Volatile Organic Compound Emission Standards for Architectural Coatings

1.3 ADMINISTRATIVE REQUIREMENTS

A. Preinstallation Conference: Conduct conference at Project Site.

1. Review requirements for waterproofing products and installation, including surface preparation, substrate conditions, expansion joints as required, project and manufacturer's details, installation procedures, mockups, testing and inspection requirements, protection and repairs, and coordination and sequencing of waterproofing work with work of other Sections.

1.4 ACTION SUBMITTALS

A. Product Data: For each type of waterproofing product (and expansion joint accessory if applicable) specified, including:

1. Technical data indicating compliance with requirements.
2. Substrate preparation instructions and recommendations.

B. Shop Drawings: Show locations for waterproofing system components. Show details for each type of substrate, joints, corners, and edge conditions, including flashings, counterflashings, penetrations, transitions, and terminations.

1.5 INFORMATIONAL SUBMITTALS

A. Qualification Data: For Installer, manufacturer[, and waterproofing Inspector].

1. Certification of manufacturer's approval of Installer.

B. Low-Emitting Product Certificate: For waterproofing products specified to meet volatile organic emissions standards, submit Greenguard Children and Schools Certification or comparable certification acceptable to Architect.

C. Product Test Reports: Test data for waterproofing products and waterproofing system, by qualified testing agency, indicating proposed waterproofing meets performance requirements, when requested by Architect.

D. Warranty: Sample of unexecuted manufacturer and installer special warranties.

E. Field quality control reports.

1.6 QUALITY ASSURANCE

A. Installer Qualifications: A manufacturer-approved firm with minimum [three] years experience in installation of specified products in successful use on similar projects, employing workers trained by manufacturer, including a full-time on-site supervisor with a minimum of [three] years experience installing similar work, and able to communicate verbally with Contractor[, Architect,] and employees.

B. Manufacturer Qualifications: A qualified manufacturer [listed in this Section] with minimum five years experience in manufacture of waterproofing as one of its principal products.

1. Manufacturer's product submitted has been in satisfactory operation on five similar installations for at least five years.
2. Approval of Manufacturers and Comparable Products: Primer bidder must submit the following in accordance with project substitution requirements, within time allowed for substitution review:

a. Completed and signed Substitution Request form.
b. Product data, including certified independent test data indicating compliance with requirements.
c. Sample shop drawings from similar project.
d. Project references: Minimum of five installations of similar system not less than five years old, with Owner and Architect contact information.
e. Name and resume of proposed qualified Inspector.
f. Sample warranty.

C. Testing Agency Qualifications: Qualified independent agency experienced in the installation of the specified waterproofing system, and qualified to perform observation and inspection specified in Field Quality Control Article to determine Installer's compliance with the requirements of this Project, acceptable to Architect, retained by the Contractor.

D. Mockups: Provide waterproofing mockup application within mockups required in other sections, or if not specified, in an area of not less than 150 sq. ft. (14 sq. m) of surface where directed by Architect for each type of substrate condition. Include examples of surface preparation, crack and joint treatment, waterproofing application, and flashing, transition, and termination conditions, to set quality standards for execution.

1. Include intersection of deck waterproofing with adjacent vertical waterproofing and moisture control system.

2. If applicable, include no less than 13 ft (3.96m) including a minimum of one splice joint of Willseal® Expansion Joint System.

1.7 DELIVERY, STORAGE AND HANDLING

A. Accept materials on site in manufacturer's unopened original packaging.

B. Store products in weather protected environment, clear of ground and moisture, within temperature ranges recommended by waterproofing manufacturer.

C. Construction Waste: Store and dispose of packaging materials and construction waste in accordance with requirements of Division 01 Section ["Construction Waste Management"] ["Temporary Facilities and Controls."]

1.8 ENVIRONMENTAL REQUIREMENTS

A. Environmental Limitations: Apply waterproofing within the range of ambient and substrate temperatures recommended by waterproofing manufacturer.

1. Protect substrates from environmental conditions that affect waterproofing performance.
2. Do not apply waterproofing during snow, rain, fog, or mist.

1.9 SCHEDULING

A. Schedule work so waterproofing applications may be inspected prior to concealment.

B. Ensure waterproofing materials are cured before covering with other materials.

1.10 WARRANTY

A. Special Manufacturer's Warranty: Manufacturer's standard form in which waterproofing manufacturer agrees to furnish waterproofing material to repair or replace those materials installed according to manufacturer's written instructions that exhibit material defects or otherwise fail to perform as specified under normal use within warranty period specified.

1. Access for Repair: Owner shall provide unimpeded access to the Project and the waterproofing system for purposes of testing, leak investigation, and repair, and shall reinstall removed cladding and overburden materials upon completion of repair.
2. Cost Limitation: Manufacturer's obligation for repair or replacement shall be limited to the original installed cost of the work.
3. Warranty Period: 5 years date of Substantial Completion.

PART 2 - PRODUCTS

2.1 MANUFACTURERS

A. Basis-of-Design Products: Provide waterproofing products manufactured by **Tremco, Inc., Commercial Sealants and Waterproofing Division,** Beachwood OH; (866) 321-6357; email: techresources@tremcoinc.com; www.tremcosealants.com, [or comparable products of other manufacturer approved by Architect in accordance with Instructions to Bidders and Division 01 General Requirements]. If applicable, provide expansion joint products manufactured by Willseal, Hudson, NH; www.willseal.com .

B. Source Limitations: Provide waterproofing system materials and accessory products from single source from single manufacturer.

2.2 PERFORMANCE REQUIREMENTS

A. General: Waterproofing system shall be capable of performing as a continuous watertight installation and as a moisture drainage plane transitioned to adjacent flashings and discharging water to the building exterior. Waterproofing shall accommodate normal substrate movement and seal expansion and control joints, construction material transitions, opening transitions, penetrations, and perimeter conditions without resultant moisture deterioration.

B. VOC Content: 72 g/L maximum per 40 CFR 59, Subpart D (EPA Method 24) and complying with requirements of authorities having jurisdiction.

C. Compatibility: Provide waterproofing system materials that are compatible with one another and with adjacent materials under conditions of service and application required, as demonstrated by waterproofing manufacturer based on testing and field experience.

2.3 WATERPROOFING MEMBRANE

A. Cold Fluid-Applied Waterproofing: polymer-enhanced, single component, fluid-applied, asphalt emulsion, below-grade waterproofing membrane.

1. Basis of Design Product: **Tremco, Inc., TREMproof 260**.
2. VOC Content: No more than 72 g/L
3. Hardness, ASTM D 2240: 50 minimum; Pass.
4. Low Temperature Crack Bridging, ASTM C836; Modified ASTM C1305: Pass.
5. Adhesion-in-Peel after Water Immersion, ASTM C836; ASTM C794: Exceeds
6. Elongation, ASTM D412: 800%
7. Peel adhesion, ASTM D903: Passes
8. Low-Temp Flexibility, ASTM C836: Pass
9. Water resistance, ASTM C836, AATC-127: Pass
10. Water Vapor Permeance E96 Dry Cup: 0.028 US Perms
11. Water Vapor Permeance E96 Wet Cup: 0.032 US Perms
12. Stability (80°F/26.7°C): 6 months Minimum 1 year
13. Solids 64%, Density 8.1 lb/gal

2.4 ACCESSORY MATERIALS

A. General: Accessory materials as described in manufacturer's written installation instructions, recommended to produce complete waterproofing system meeting performance requirements, and compatible with waterproofing material and adjacent materials.

B. Joint Backing: Closed-cell, polyethylene rod as recommended by membrane manufacturer.

C. Joint Sealant: ASTM C 719, high performance, medium-modulus, low-VOC, UV-stable, non-sag polyurethane sealant approved by waterproofing manufacturer for adhesion and compatibility with waterproofing and accessories.

1. Basis of Design Product: **Tremco, Dymonic 100**

2. Basis of Design Product: **Tremco, TREMproof 260 R**

D. Expansion Joint Pre-compressed or Closed Cell, Monolithic Foam System. Foam Structure Must not Contain Unbonded Foam Laminations;

1. **Willseal® Coreseal** for use in both vertical and horizontal below grade system applications requiring +/-25% movement capability, closed cell, and a lightweight seal.
2. **Willseal® Color Coreseal** for use in both vertical and horizontal below grade system applications requiring +/-25% movement capability, closed cell, and a lightweight seal.
3. **Willseal® Color Coreseal – CM** for use in both vertical and horizontal below grade Tremco system applications requiring +/-25% movement capability, closed cell, and a lightweight seal with an integrated waterproofing membrane.
4. **Willseal® 250 BG** for use in below grade applications, requiring +/- 50% movement capability

E. Rigid Drainage, protection and Insulation Board where an R value is required: TREMDrain™ DPI (Drainage, protection and Insulation) board for vertical surfaces. The rigid board shall be designed to insulate (at R-values of 3, 5 and 10 – depending on size) while also providing positive drainage and membrane protection.

F. Prefabricated Composite Drainage

1. Basis of Design Product: **Tremco, TREMDrain 6000**

2. Basis of Design Product: **Tremco, TREMDrain Total Drain**

G. Carrier Sheet

1. Basis of Design Product: **Typar 3401G Carrier Sheet or Prior Approved Carrier Sheet**

PART 3 - EXECUTION

3.1 EXAMINATION

A. Surface Condition: Before applying waterproofing materials and accessories, examine substrate and conditions to ensure substrates are fully cured, smooth, clean, dry, and free from high spots, depressions, loose and foreign particles and other deterrents to adhesion, and conditions comply with manufacturer's written recommendations.

1. Verify surfaces are free from release agents, curing agents, laitance, and other contaminates. Test for waterproofing adhesion per manufacturer's recommended method. Notify Architect of unsatisfactory conditions.
2. Verify masonry joints are filled with mortar and struck flush.

B. Proceed with installation only after unsatisfactory conditions have been corrected.

3.2 INTERFACE WITH OTHER WORK

A. Sequencing of Work: Coordinate sequencing of waterproofing work with work of other sections that form portions of building envelope moisture control to ensure that expansion joint, flashings and transition materials can be properly installed and inspected.

B. Subsequent Work: Coordinate waterproofing work with work of other sections installed subsequent to waterproofing to ensure complete inspection of installed waterproofing and sealing of waterproofing penetrations necessitated by subsequent work.

3.3 PREPARATION

A. Clean, prepare, and treat substrates in accordance with waterproofing manufacturer's written instructions.

1. Mask adjacent finished surfaces.
2. Remove contaminants and film-forming coatings from substrates.
3. Remove projections and excess materials and fill voids with substrate patching material.
4. Prepare and treat joints and cracks in substrate per ASTM D 4258 and waterproofing manufacturer's written instructions.
5. For accessory materials, follow manufacturers application instructions.
6. On poured concrete walls, remove wall ties on outside and inside of wall. On poured concrete walls, tie holes and other voids, honeycomb, rock pockets, etc. shall be patched with a non-shrinking grout. Refer to detail drawings for repair and/or waterproofing of any cracks or non-moving control joints and/or other common waterproofing situations.
7. Rout, clean, prepare and detail surface cracks in accord with manufacturer's instructions;
8. Clean metal surfaces to bright metal by wire brushing or mechanical etching.
9. Allow detail applications to cure in accordance with manufacturer's instructions prior to general application of membrane.
10. Lagging walls for blindside waterproofing applications to be approved by local Tremco Representative

B. Detail Preparation: Prepare non-moving shrinkage cracks, large cracks, construction joints, expansion joints, projections and protrusions, penetrations, drains, and changes in plane in accordance with waterproofing manufacturer's written instructions and details, using accessory materials specified. The following are two acceptable options for detail preparation:

1. Adhere strips of elastomeric sheet to moving expansion joints on both sides in conjunction with a metal termination bar embedded in a layer of cold fluid-applied waterproofing and overlay with coat of cold fluid-applied waterproofing.
2. Apply single-component urethane within moving expansion joints and overlay with a coat of cold fluid-applied waterproofing.

C. Transitions to Adjacent Materials: Apply Tremco Approved Primer to transition cold fluid-applied waterproofing membrane to adjacent components of the building envelope.

3.4 WATERPROOFING INSTALLATION

A. General: Apply waterproofing material to form a seal to achieve a continuous waterproofing according to waterproofing manufacturer's written instructions. Apply waterproofing material within manufacturer's recommended application temperature ranges.

B. Cold Fluid-Applied Waterproofing: Apply waterproofing in total wet film thickness and with methods recommended in writing by waterproofing manufacturer.

B. Terminations: Install terminations of waterproofing membrane in accordance with ASTM C 898 Standard Guide for Use of High Solids Content, Cold Liquid-Applied Elastomeric Waterproofing Membrane with Separate Wearing Course and ASTM C 1471 Standard Guide for Use of High Solids Content Cold Liquid-Applied Elastomeric Waterproofing Membrane on Vertical Surfaces, as applicable to application, at not less than minimum height recommended by waterproofing manufacturer.

C. Correct deficiencies in or remove waterproofing that does not comply with requirements; repair substrates and reapply waterproofing components.

3.4 FIELD QUALITY CONTROL

A. Contractor's Inspector: Contractor shall engage manufacturer's qualified Inspector full-time during the Work to perform tests and inspections, including documenting of waterproofing prior to concealment.

1. Contractor's Inspector shall measure membrane thickness with a wet film gauge during the application process at least once for every 100 sq. ft. (10 sq. m).
2. Provide written report of tests and inspections.
3. Where applicable, inspect transitional material such as expansion joints, flashings, insulation are installed per manufacturers recommendations.

B. Testing Agency: Owner will engage a qualified testing agency to perform tests and inspections.

C. Testing Agency: Owner will engage a qualified testing agency to inspect substrate conditions, surface preparation, waterproofing application, protection, and drainage components, and to furnish reports to Architect.

D. Coordination of Inspection: Cooperate with testing agency. Allow access to work areas and staging. Notify testing agency in writing of schedule for Work of this Section to allow sufficient time for testing and inspection.

1. Do not cover Work until testing and inspection is completed and accepted.

E. Reporting: Forward written inspection reports to the Architect within 10 working days of the inspection and test being performed.

F. Correction of Work: Correct deficient applications not passing tests and inspections, make necessary repairs, and retest as required to demonstrate compliance with requirements.

3.5 CLEANING AND PROTECTING

A. Clean spills, stains, and overspray resulting from application utilizing cleaning agents recommended by manufacturers of affected construction. Remove masking materials.

B. Protect waterproofing from damage from subsequent work. Protect waterproofing materials from exposure to UV light for period in excess of that acceptable to waterproofing manufacturer; replace overexposed materials and retest.

END OF SECTION

SUB-SLAB MEMBRANE SPECIFICATION

A

IDENTIFICATION STAMP
DIV. OF THE STATE ARCHITECT
APP: 03-121324 INC:
REVIEWED FOR
SS ☐ FLS ☐ ACS ☑
DATE: 09/14/2022

OFFICE OF THE STATE FIRE MARSHAL
APPROVED FIRE AND PANIC ONLY
09/07/22
21-0233
Approval of this plan does not authorize or approve any omission or deviation from applicable regulations. Final approval is subject to field inspection. One set of approved plans shall be available on the project site at all times.

DGS GENERAL SERVICES
Department of General Services
Architecture & Engineering Sections
State of California
Real Estate Services Division
Project Management & Development Branch
707 Third Street, Suite 4-105
West Sacramento, California 95605

REGISTERED PROFESSIONAL ENGINEER
KARL N. ARRIOLA
C-31416
exp. 12-31-22
CIVIL
STATE OF CALIFORNIA

METHANE SPECIALISTS
5210 LEWIS ROAD
SUITE 1
AGOURA HILLS, CA
93,301
TEL 805.987.5300
www.methanespecialists.com

Issue

No.	Date	Description
1	9/2/22	

Project
SANTA MARIA FIELD OFFICE REPLACEMENT

2770 SANTA MARIA WAY
SANTA MARIA, CA 93455
SANTA BARBARA COUNTY

DEPT OF MOTOR VEHICLES

Supervisor	Designed	Drawn
K. ARRIOLA	J. KASONDRA	J. KASONDRA

DSA App No.	SFM Permit No.
03-121324	21-S-0233-CP-ER

Sheet Title
SUB-SLAB MEMBRANE TERMINATION SPECIFICATIONS

Project Number
DGS000000140725

Reference North | Sheet Scale

Sheet Number
C706

Copyright © 2020, California Department of General Services - Real Estate Services Division

RELATIVE BORDER SCALE IN INCHES 0 1 2 3

TDS

VERSION 20.0

VIPER® VAPORCHECK®

10-MIL REINFORCED CLASS A VAPOR BARRIER

VAPOR RETARDERS

DIVISION
033000, 072600

PRODUCT NAME

Viper® VaporCheck® 10-mil
"Class A" Reinforced Under-Slab Vapor Barrier

MANUFACTURER

ISI BUILDING PRODUCTS
401 Truck Haven Road
East Peoria, IL 61611
866.698.6562 / www.isibp.com

PRODUCT DESCRIPTION

BASIC USE
Viper VaporCheck 10-mil is a unique high strength, high performance, cross-woven reinforced polyethylene-based under-slab vapor barrier specifically designed for preventing moisture migration through concrete slabs-on-grade. Its superior strength properties greatly restrict punctures and tears that come with extensive jobsite traffic. Viper VaporCheck reduces water vapor emission transfer and moisture migration from entering the building envelope on commercial, industrial and residential applications. Viper VaporCheck may be used to reduce radon and methane gas migration and is resistant to other adverse soil conditions. Viper VaporCheck is also designed to control condensation, mold, mildew and degradation and prevents costly flooring failures and damage to moisture sensitive furnishings within a building's interior.

COMPOSITION & MATERIALS
Viper VaporCheck 10-mil is manufactured using the latest generation of prime virgin (non-recycled) polyethylene resin, constructed in a triple-ply extrusion coated process and engineered with physical properties that maintain long-term performance. The extrusion coated process bonds woven high-density fibers together, using molten polyethylene, creating an excellent balance of high puncture and tensile strength while maintaining very low water vapor permeance characteristics. The cross-woven high-density fibers, used as the reinforcing layer, yield the highest strength-to-weight ratio, tensile strength, tear resistance, bursting strength and puncture resistance of any product produced of its kind.

SIZE
Standard Size: 2,400 ft² rolls (12' x 200')

WEIGHT
Approximately 98 lbs per roll

BENEFITS
- Unsurpassed puncture resistance
- Exceeds ASTM E 1745 "Class A" guidelines
- Maintains long-term performance after exposure to adverse soil conditions
- Greatly reduces moisture migration through slab-on-grade applications

TECHNICAL DATA

APPLICABLE STANDARDS
American Society for Testing & Materials (ASTM)

ASTM E 1745 Standard Specification for Plastic Water Vapor Retarders Used in Contact with Soil or Granular Fill Under Concrete Slabs

ASTM E 154 Standard Test Methods for Water Vapor Retarders used in Contact with Earth Under Concrete Slabs, on Walls or as Ground Cover

ASTM D 1709 Standard Test Methods for Impact Resistance of Plastic Film by the Free-Falling Dart Method

ASTM D 5602 Standard Test Methods for Static Puncture Resistance of Roofing/Under Slab Membrane Specimens

ASTM E 96 Standard Test Methods for Water Vapor Transmission of Materials

ASTM D 882 Standard Test Method for Tensile Properties of Thin Plastic Sheeting

ASTM F 751 Standard Test Method for Coated Fabrics

ASTM E 1643 Standard Practice for Selection, Design, Installation, and Inspection of Water Vapor Retarders Used in Contact with Earth or Granular Fill Under Concrete Slabs

ACI 302.2R-06 Guide for Concrete Slabs that Receive Moisture-Sensitive Flooring Materials

NOTE: All Viper VaporCheck testing is done by accredited, third-party testing agencies following stringent industry guidelines and testing standards.

ENVIRONMENTAL CONSIDERATIONS
Viper VaporCheck can aid in controlling soil gas and poisons such and methane and radon.

PHYSICAL PROPERTIES
Viper VaporCheck exceeds all ASTM E 1745 "Class A" requirements for under-slab vapor retarders.

INSTALLATION

SUB-GRADE PREPARATION
Level and tamp or roll granular base as specified by the architectural or structural drawings.

VAPOR BARRIER PLACEMENT
Unroll Viper VaporCheck with the longest dimension parallel with the direction of the pour. Unfold to full width. Extend Viper VaporCheck over footings and seal to foundation wall, grade beam or slab at an elevation consistent with the top of the slab or terminate at impediments such as water stops or dowels. Use Viper Vapor Tape, Viper Double Bond Tape, Viper VaporPatch and/or VaporCheck Mastic at such terminations.

SEAMS AND PENETRATIONS
Seal around pipes, support columns or any other penetration with Viper VaporPatch, VaporCheck Mastic or at a minimum, a combination of Viper VaporCheck and Viper Vapor Tape. Doing so creates a monolithic membrane between the surface of the slab and moisture sources below.

Holes or openings through Viper VaporCheck should be effectively sealed with Viper Vapor Tape, Viper VaporPatch or VaporCheck Mastic to maintain integrity of the vapor barrier. Overlap joints a minimum of six inches. Seal overlap together with Viper Vapor Tape and/or Viper Double Bond Tape.

PROTECTION
When installing reinforcing steel and utilities, in addition to the placement of concrete, take precaution to protect Viper VaporCheck. Carelessness during installation can damage the most puncture-resistant vapor barriers. Provide for additional protection in high traffic areas.

Place standard reinforcing bar supports on Viper VaporCheck. The strength characteristics of Viper VaporCheck will help guard against possible punctures caused by reinforcing bar supports.

Avoid driving stakes through Viper VaporCheck. If this cannot be avoided, each individual hole must be repaired.

If a cushion or blotter layer is required in the design between the vapor barrier and the slab, additional care should be taken, especially if sharp crushed rock is used. Washed rock will provide less chance of damage during placement.

These are general installation instructions. Instructions on architectural or structural drawings should be reviewed and followed. Detailed installation instructions can be obtained by calling the manufacturer at 866.698.6562 or visiting www.isibp.com.

WARRANTY

Warranty information can be obtained by calling the manufacturer at 866.698.6562 or visiting www.isibp.com.

MAINTENANCE

Requires no maintenance once installed.

TECHNICAL SERVICES

Technical information and detailed test results can be obtained by calling the manufacturer at 866.698.6562.

FILING SYSTEMS

Additional information can be obtained by calling the manufacturer at 866.698.6562 or visiting www.isibp.com.

PROPERTIES TEST PROCEDURE (INDEPENDENT TEST FACILITY)	TEST METHOD APPLICABLE STANDARDS	RESULTS IP UNITS
THICKNESS (NOMINAL)	N/A	10-mil
WEIGHT (PER MSF)	N/A	40.8 lbs
CLASSIFICATION	ASTM E 1745	EXCEEDS CLASS A, B, C
PUNCTURE RESISTANCE	ASTM 1709	15,839 grams MAX WEIGHT
PUNCTURE RESISTANCE	ASTM E 154 SEC. 10	91.59 kg
PUNCTURE RESISTANCE	ASTM D 5602	76 lbs
TENSILE STRENGTH (NEW MATERIAL)	ASTM E 154 SEC. 9	136 lbf/in MD, 134 lbf/in TD
TENSILE STRENGTH (AFTER SOAKING)	ASTM E 154 SEC. 9	140 lbf/in MD, 133 lbf/in TD
ELONGATION (NEW MATERIAL)	ASTM E 154 SEC. 9	21.6% MD, 21.0% TD
ELONGATION (AFTER SOAKING)	ASTM E 154 SEC. 9	24.9% MD, 20.6% TD
TEAR STRENGTH	ASTM D 751 (TONGUE)	54 lbs WARP, 57 lbs WEFT
BURSTING STRENGTH	ASTM D 751 (MULLEN)	318 lbs
OPERATING TEMPERATURE RANGE	N/A	-70°F to 180°F
WATER VAPOR PERMEANCE (NEW MATERIAL)	ASTM E 96 / 154 SEC. 7	0.0016 perms
WATER VAPOR TRANSMISSION RATE (WVTR)	ASTM E 96 / 154 SEC. 7	0.0006 grains/(ft²*hr)
CHEMICAL RESISTANCE	ASTM E 154	UNAFFECTED
LIFE EXPECTANCY	ASTM E 154	INDEFINITE
RADON DIFFUSION COEFFICIENT	K/124/02/95	11 x 10^{-12} M²/S

DISCLAIMER: TO THE BEST OF OUR KNOWLEDGE, THE SPECIFICATION CHART LISTS TYPICAL PROPERTY VALUES AND ARE INTENDED AS GUIDES ONLY, NOT AS SPECIFICATION LIMITS. ISI BUILDING PRODUCTS MAKES NO WARRANTIES AS TO THE FITNESS FOR A SPECIFIC USE OR MERCHANTABILITY OF PRODUCTS REFERRED TO, NO GUARANTEE OF SATISFACTORY RESULTS FROM RELIANCE UPON CONTAINED INFORMATION OR RECOMMENDATIONS AND DISCLAIMS ALL LIABILITY FOR RESULTING LOSS OR DAMAGE.

ISI BUILDING PRODUCTS®
AN AFFILIATE OF MEYER ENTERPRISES, LLC
401 TRUCK HAVEN ROAD, EAST PEORIA, IL 61611
PHONE: 309.698.0062 / FAX: 309.698.0065

IDENTIFICATION STAMP
DIV. OF THE STATE ARCHITECT
APP: 03-121324 INC:
REVIEWED FOR
SS ☐ FLS ☐ ACS ☑
DATE: 09/14/2022

OFFICE OF THE STATE FIRE MARSHAL
APPROVED FIRE AND PANIC ONLY
09/07/22
21-0233
Approval of this plan does not authorize or approve any omission or deviation from applicable regulations. Final approval is subject to field inspection. One set of approved plans shall be available on the project site at all times.

DGS GENERAL SERVICES
Department of General Services
Architecture & Engineering Sections
State of California
Real Estate Services Division
Project Management & Development Branch
707 Third Street, Suite 4-105
West Sacramento, California 95605

REGISTERED PROFESSIONAL ENGINEER
JOSEPH N. ARRIOLA
C-31416
exp. 12-31-22
CIVIL
STATE OF CALIFORNIA

METHANE SPECIALISTS
5230 LEWIS ROAD
SUITE 1
AGOURA HILLS, CA
91301
TEL 805.822.1334
www.methanespecialists.com

Issue

No.	Date	Description
1	9/2/22	

Project
SANTA MARIA FIELD OFFICE REPLACEMENT

2770 SANTA MARIA WAY
SANTA MARIA, CA 93455
SANTA BARBARA COUNTY

DEPT OF MOTOR VEHICLES

Supervisor	Designed	Drawn
K. ARRIOLA	J. KASONDRA	J. KASONDRA

DSA App No. 03-121324
SFM Permit No. 21-S-0233-CP-ER

Sheet Title
SUB-SLAB MEMBRANE TERMINATION SPECIFICATIONS

Project Number
DGS000000140725

Reference North
Sheet Scale
Sheet Number
C707

Copyright © 2020, California Department of General Services - Real Estate Services Division

SUB-SLAB MEMBRANE SPECIFICATION A

RELATIVE BORDER SCALE IN INCHES 0 1 2 3

VAPOR-VENT LOW PROFILE SUB-SLAB VAPOR COLLECTION SYSTEM

SECTION 02 56 16 – GAS CONTROL

PART 1 - GENERAL

1.1 RELATED DOCUMENTS

A. Drawings and general provisions of the contract, including general and supplementary conditions, and Division 1 specification section, apply to this section.

1.2 SECTION INCLUDES

A. The installation of materials designed to provide a sub-slab vapor collection system to eliminate the buildup of contaminant vapors under a structure, this section includes the following:

1. Surface preparation and substrate treatment
2. ***Vapor-Vent*** low profile vent fittings
3. Vent riser installation stub up

1.3 RELATED SECTIONS

A. Section 02 24 00: Environmental Assessment

B. Section 02 32 00: Geotechnical Investigation

C. Section 03 15 00: Concrete Accessories

D. Section 03 30 00: Cast-in-Place Concrete

E. Section 03 40 00: Precast Concrete

F. Section 07 90 00: Joint Protection

G. Section 31 30 00: Earthwork Methods

1.4 PERFORMANCE REQUIREMENTS

A. General: Provide a venting material that collects contaminant vapors and directs them to discharge, or to collection points, as specified in the vapor mitigation drawings and complies with the physical requirements set forth by the manufacturer.

1.5 SUBMITTALS

A. Product Data: Submit manufacturer's printed technical data, and tested physical and performance properties.

B. Shop Drawings: Project specific drawings showing related transitions from flat ***Vapor-Vent*** pipe to circular pipe.

C. Samples: Submit a sample of each, if required:

1. ***Vapor-Vent***
2. ***Vapor-Vent End Out***.

D. Applicator Certification: Submit written confirmation at the vapor collection installer is currently approved by the membrane manufacturer.

1.6 QUALITY ASSURANCE

A. Applicator Qualifications: Mitigation system applicator shall be an EPRO Authorized Applicator who is trained and abides to EPRO standards and policies.

B. Third Party Inspection: Independent inspection of the vapor intrusion barrier may be required based on project conditions and desired warranty coverage, or as required based on local building code/government agency jurisdiction. Inspection reports shall be submitted directly to the vapor intrusion barrier manufacturer and made available to other parties per the owner's direction.

C. Pre-Construction Meeting: A meeting shall be held prior to application of the vapor intrusion barrier system to assure proper substrate preparation, confirm installation conditions, and any additional project specific requirements.

D. Materials: Vapor collection system and vapor intrusion barrier materials and system shall be single sourced by a manufacturer specializing in vapor intrusion barriers.

1.7 DELIVERY, STORAGE AND HANDLING

A. Delivery: Deliver materials to site labeled with manufacturer's name, product brand name, material type, and date of manufacture. Upon the arrival of materials to the jobsite, inspect materials to confirm material has not been damaged during transit.

B. Storage: Proper storage of materials is the responsibility of the certified applicator. Consult product data sheets to confirm storage requirements. Protect stored materials from direct sunlight.

C. Disposal: Remove and replace any material that cannot be properly applied in accordance with local regulations and specification section 01 74 19.

1.8 PROJECT CONDITIONS

A. Substrate Review: Substrates shall be reviewed by the certified applicator, engineer of record, and accepted prior to application.

PART 2 - PRODUCTS

2.1 MANUFACTURERS

A. Acceptable Manufacturer: EPRO Services, Inc. (EPRO), P.O. Box 347; Derby, KS 67037; Tel: (800) 882-1896; Email: Info@eproinc.com; Web: www.eproinc.com

B. Basis of Design: ***Vapor-Vent***

C. Approved Alternative: ***e.vent***

2.2 VAPOR COLLECTION MATERIALS

1. ***Vapor-Vent***: ***Vapor-Vent*** features a lightweight three-dimensional, highly flexible polypropylene core and a non-woven geotextile filter fabric. The filter fabric is bonded to the dimples of the polypropylene core to prevent clogging within the vent.

PROPERTIES	TEST METHOD	VALUE
	DIMPLED CORE	
Core Material		Polypropylene
Color		Black
Compressive strength	ASTM D 1621	9,500 PSF (455 kN/m²)
Thickness	ASTM - 1777	1 in.
Flow rate	ASTM D 4716	30 gpm./ft. of width
	FILTER FABRIC	
CBR puncture	ASTM D 6241	250 lbs.
Grab tensile strength	ASTM D 4632	100 lbs
AOS	ASTM D 4751	70 U.S. sieve
Permitivity	ASTM D 4491	2.0 sec -1
Flow rate	ASTM D 4491	140 gpm./ft²
UV resistance	ASTM D 4355	70% (500 hrs.)
Dimensions: 165' x 12" x 1"		
Weight: 65 pounds		

2.3 AUXILIARY MATERIALS

A. General: All accessory products shall be provided by the specified vapor intrusion barrier manufacturer. Auxiliary products used in lieu of, or in addition to, the manufactures products must be approved in writing by the manufacturer prior to installation.

B. Vapor-Vent Fittings: Transition low profile venting to ***Vapor-Vent End Out*** in order to properly transition to specified round pipe.

C. Reinforcement Tape: ***e.tape*** should be used when securing ***Vapor-Vent*** to fittings and at transition joints.

PART 3 - EXECUTION

3.1 EXAMINATION

A. Comply with project documents, manufacturer's product information, including product installation guidelines and pre-job punch list.

3.1.2 IDENTIFY LOW PROFILE VENT LAYOUT

A. Identify and mark the layout of the low-profile vent material according the vapor mitigation plans developed by the engineer of record.

3.2 LOW PROFILE VENT INSTALATION

A. General: Install ***Vapor-Vent*** over substrate material where designated on drawings. The flat base of the inner core shall be placed up, facing the installer. Seams shall be overlapped in accordance with manufacturer's recommendations.

B. Intersection: At areas where low profile vent intersects, cut and fold back fabric to expose the dimpled core. Arrange the strips so that the top strip interconnects into the bottom strip in an interlocking fashion. Unfold fabric to cover the core and use ***e.tape*** to seal the connection to prevent sand or gravel from entering the core.

C. Footings and Grade Beams: When crossing low-profile over footings or grade beams, a solid pipe sleeve may be required to keep the vapor collection system continuous. The solid pipe sleeve will be placed on top of, or through, the desired transition area. Once the solid pipe sleeve is in place, attach a ***Vapor-Vent End Out*** fitting on either side of the solid pipe and seal the low profile vent to the ***Vapor-Vent End Out***. Consult with engineer of record and structural engineer for appropriate use and placement of solid pipe sleeve.

D. Vent Risers: Place vent risers per the vapor mitigation plans, or as directed by the engineer of record. Connect the low-profile vent to ***Vapor-Vent End Out*** and seal with ***e.tape***. An additional reducer may be required to transition the 4" diameter end out fitting to the specified diameter vent riser.

3.2.1 PLACEMENT OF OVERBURDON

A. If placing overburden over the vapor collection system take care to prevent damage to the venting material.

B. Heavy equipment shall not be driven over the low-profile pipe.

C. Do not penetrate the vapor collection system once it is installed.

End of Section

SUB-SLAB FLAT VENT SPECIFICATION

A

IDENTIFICATION STAMP
DIV. OF THE STATE ARCHITECT
APP: 03-121324 INC:
REVIEWED FOR
SS ☐ FLS ☐ ACS ☑
DATE: 09/14/2022

OFFICE OF THE STATE FIRE MARSHAL
APPROVED FIRE AND PANIC ONLY
09/07/22
21-0233
Approval of this plan does not authorize or approve any omission or deviation from applicable regulations. Final approval is subject to field inspection. One set of approved plans shall be available on the project site at all times.

DGS GENERAL SERVICES

Department of General Services
Architecture & Engineering Sections
State of California
Real Estate Services Division
Project Management & Development Branch
707 Third Street, Suite 4-105
West Sacramento, California 95605

REGISTERED PROFESSIONAL ENGINEER
KAY N. ARRIOLA
C-31416
exp. 12-31-22
CIVIL
STATE OF CALIFORNIA

METHANE SPECIALISTS
5210 LEWIS ROAD
SUITE 1
AGOURA HILLS, CA
91301
(818) 991-1996
www.methanespecialists.com

Issue

No.	Date	Description
1	9/2/22	

Project
SANTA MARIA FIELD OFFICE REPLACEMENT

2770 SANTA MARIA WAY
SANTA MARIA, CA 93455
SANTA BARBARA COUNTY

DEPT OF MOTOR VEHICLES

Supervisor	Designed	Drawn
K. ARRIOLA	J. KASONDRA	J. KASONDRA

DSA App No.	SFM Permit No.
03-121324	21-S-0233-CP-ER

Sheet Title
SUB-SLAB MEMBRANE TERMINATION SPECIFICATIONS

Project Number
DGS000000140725

Reference North | Sheet Scale

Sheet Number
C708

Copyright © 2020, California Department of General Services - Real Estate Services Division

RELATIVE BORDER SCALE IN INCHES 0 1 2 3

OUTDOOR HAZARDOUS AREA CLASSIFICATION

LOCATION	PAVEMENT SIZE	METHANE DESIGN LEVEL	MEASURED SOIL GAS CONCENTRATION (ppmv)	MEASURED SOIL GAS PRESSURE (inches of water)	HAZARDOUS AREA CLASSIFICATION
Below Finished grade	None	I, II, III or IV	< 12,500	Less than 2" water	Unclassified
		I, II, III or IV	< 12,500	Greater than 2" water	5' or less depth; Unclassified Between 5' to 10' depth; Class 1 Division 2 Over 10' depth; Class I Division 1
		V	> 12,500	N/A	
Below finished grade with pavement greater than 15' from outside wall of building	❁ Less than 5000 Sq. Ft. or ❁ Greater than 5000 Sq. Ft. & Less 25' Width	I, II, III or IV	< 12,500	Less than 2" water	Unclassified
		I, II, III or IV	< 12,500	Greater than 2" water	5' or less depth; Unclassified Between 5' to 10' depth; Class 1 Division 2 Over 10' depth; Class I Division 1
		V	> 12,500	N/A	
Below finished grade with pavement greater than 15' from outside wall of building or structure	Greater than 5000 Sq. Ft.	I, II, III	< 5,000	Less than 2" water	Unclassified
		IV	> 5,000, < 12,500,	Less than 2" water	2.5' or less depth; Unclassified Between 2.5' to 10' depth; Class 1 Division 2 Over 10' depth; Class I Division 1
		I, II, III or IV	< 12,500	Greater than 2" water	10' or less depth; Class I Division 2 Over 10' depth; Class I Division 1
		V	> 12,500	N/A	
Below Finished grade with pave-ment with less than or equal to 15' from the outside wall of a building or structure	Greater than 5000 Sq. Ft.	I, or II	< 1,000	Less than 2" water	Unclassified
		III	>1,000, < 5,000	Less than 2" water	2.5' or less depth; Unclassified Between 2.5' to 10' depth; Class 1 Division 2 Over 10' depth; Class I Division 1
		IV	>5,000, < 12,500	Less than 2" water	10' or less depth; Class I Division 2 Over 10' depth; Class I Division 1
		I, II, III or IV	<12,500	Greater than 2" water	Class I Division 1
		V	>12,500	N/A	
	Greater than 5000 Sq. Ft.	I, II, III or IV	< 12,500	Less than 2" water	Unclassified
		I, II, III or IV	< 12,500	Greater than 2" water	5' or less depth; Unclassified Between 5' to 10' depth; Class 1 Division 2 Over 10' depth; Class I Division 1
		V	> 12,500	N/A	
Above grade	Regardless	N/A	N/A	N/A	Unclassified

VENT RISER HAZARDOUS AREA CLASSIFICATION

LOCATION	POWER VENTILATED	HEMISPHERICAL DISTANCE FROM THE RIM OF THE VENT, A JOINT OR A FITTING	HAZARDOUS AREA CLASSIFICATION
Outlet	No	Within 0 to 3 feet	Class 1, Division 1
		Within 3 to 5 feet	Class 1, Division 2
		Over 5 feet	Unclassified
	Yes	Within 0 to 5 feet	Class 1, Division 1
		Within 5 to 10 feet	Class 1, Division 2
		Over 10 feet	Unclassified
Joints and Fittings not enclosed within wall spaces	N/A	Within 0 to 3 feet	Class 1, Division 2
		Over 3 feet	Unclassified
Joints and Fittings within framed wall spaces	N/A	Any distance within the frame stud bay	Class 1, Division 1
In the Vent System	N/A	Any distance within the frame stud bay	Class 1, Division 1
Gas Sampling Port	N/A	Within 0 to 3 feet	Class 1, Division 2
Mechanical extraction vent with direct drive blade motor with a mechanical check valve in the outlet of the motor duct.	Yes	N/A	Unclassified
Mechanical extraction vent with direct drive blade motor without a check valve in the outlet of the motor duct.	Yes	Within 0 to 3 feet	Class 1, Division 2

BUILDING HAZARDOUS AREA CLASSIFICATION

LOCATION	METHANE DESIGN LEVEL	MEASURED SOIL GAS CONCENTRATION (ppmv)	MEASURED SOIL GAS PRESSURE (inches of water)	HAZARDOUS AREA CLASSIFICATION
Below Impervious Membrane	I or II	< 1,000	Less than 2" water	Unclassified
	III or IV	> 1,000, < 12,500	Less than 2" water	10' or less depth; Class 1, Division 2, Over 10' depth; Class 1, Division 1
	I, II, III or IV	< 12,500	Greater than 2" water	Class 1, Division 1
	V	> 12,500	N/A	
Below grade within the raised floor foundation or lowest building slab without an Impervious Membrane	I or II	< 1000	Less than 2" water	Unclassified
	III or IV	> 1,000 and < 12,500	Less than 2" water	10' or less depth; Class 1, Division 2, Over 10' depth; Class 1, Division 1
	I, II, III or IV	< 12,500	Greater than 2" water	Class 1, Division 1
	V	> 12,500	N/A	
Above grade within the raised floor foundation footing without an Impervious Membrane but with adequate ventilation	I, II, III or IV	< 12,500	Less than 2" water	Unclassified
	I, II, III or IV	< 12,500	Greater than 2" water	Class 1, Division 2
	V	> 12,500	N/A	
Above Impervious Membrane, but below the lowest building slab or raised floor foundation	I, II, III or IV	Below Membrane Less than 12,500	Below Membrane Greater than 2" water	Unclassified
	I, II, III or IV	Below Membrane Less than 12,500	Below Membrane Less than 2" water	
	V	Below Membrane Greater than 12,500	N/A	Class 1, Division 2
Above Impervious Membrane, through the lowest building slab or Above Slab	N/A	N/A	N/A	Unclassified

NOTES:

UNPAVED OPEN AREA, SUCH AS PLANTERS OR LANDSCAPING NOT LESS THAN 3' X 3' SPACED AT LESS THAN OR EQUAL TO 50' FROM EACH OTHERS EDGE, THE AREA IN BETWEEN THEM SHALL BE TREATED AS AN AREA THAT IS LESS THAN 5,000 SQ. FT. IF THE SPACE IN BETWEEN THEM EXCEEDS 50', THAT AREA CAN BE CONSTRUED AS LESS THAN 5,000 SQ. FT. PROVIDED THAT THE CONDUIT OR CABLE IS INSTALLED IN A TRENCH AND BACKFIELD WITH 3/4-INCH AGGREGATE OR GRAVEL UP TO THE GRADE.

THE HAZARDOUS AREA DESIGNATION FOR THESE AREAS IS CONSIDERED AS UNCLASSIFIED UNDER ANY ONE OF THE FOLLOWING CONDITIONS:

a. ALL JOINTS AND FITTINGS ARE WELDED IN APPROVED MANNER.

b. APPROVED DOUBLE WALLED VENT RISERS

c. APPROVED FOUR INCHED OR SMALLER THREADED STEEL PIPE VENTING SYSTEM OR EQUIVALENT APPROVED PIPING SYSTEM

IDENTIFICATION STAMP
DIV. OF THE STATE ARCHITECT
APP: 03-121324 INC:
REVIEWED FOR
SS ☐ FLS ☐ ACS ☑
DATE: 09/14/2022

OFFICE OF THE STATE FIRE MARSHAL
APPROVED FIRE AND PANIC ONLY
09/07/22
21-0233
Approval of this plan does not authorize or approve any omission or deviation from applicable regulations. Final approval is subject to field inspection. One set of approved plans shall be available on the project site at all times.

DGS GENERAL SERVICES
Department of General Services
Architecture & Engineering Sections
State of California
Real Estate Services Division
Project Management & Development Branch
707 Third Street, Suite 4-105
West Sacramento, California 95605

REGISTERED PROFESSIONAL ENGINEER
KEVIN N. ARRIOLA
C-31416
exp. 12-31-22
CIVIL
STATE OF CALIFORNIA

5210 LEWIS ROAD
SUITE 1
AGOURA HILLS, CA
91301
(818) 597-1405
www.methanespecialists.com
METHANE SPECIALISTS

Issue

No.	Date	Description
1	9/2/22	

Project
SANTA MARIA FIELD OFFICE REPLACEMENT
2770 SANTA MARIA WAY
SANTA MARIA, CA 93455
SANTA BARBARA COUNTY

DEPT OF MOTOR VEHICLES

Supervisor	Designed	Drawn
K. ARRIOLA	J. KASONDRA	J. KASONDRA

DSA App No. 03-121324
SFM Permit No. 21-S-0233-CP-ER

Sheet Title
HAZARDOUS AREA CLASSIFICATION

Project Number
DGS000000140725

Reference North
Sheet Scale
Sheet Number
C709

Copyright © 2020, California Department of General Services - Real Estate Services Division

RELATIVE BORDER SCALE IN INCHES 0 1 2 3

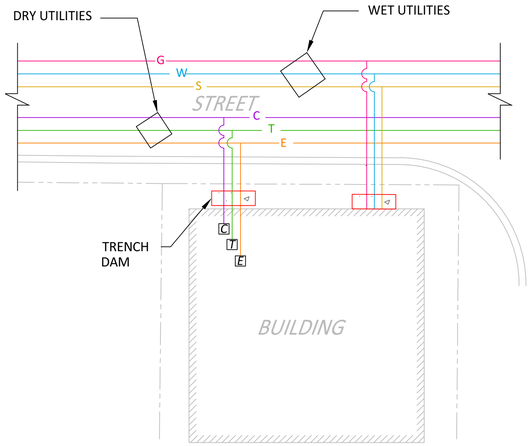

LEGEND

- PROPERTY LINE
- TRENCH DAM

WET UTILITIES
- G — GAS
- W — WATER
- S — SEWER

DRY UTILITIES
- C — CABLE TV
- T — TELEPHONE
- E — ELECTRICAL

UTILITIES-OVERVIEW | A

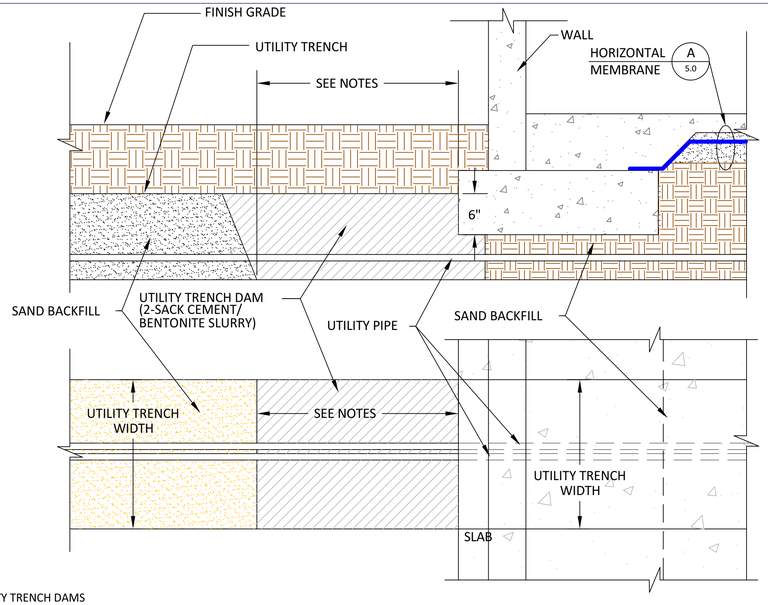

SECTION

PLAN VIEW

UTILITY TRENCH DAMS

1. ALL TRENCH DAMS SHALL BE INSTALLED IN TRENCHES CONTAINING PIPING AND CONDUIT THAT CONNECTS DIRECTLY FROM THE UTILITY LINES IN THE STREET.
2. THE WIDTH OF A TRENCH DAM SHALL BE ONE HALF THE LENGTH.
3. TRENCH DAMS SHALL BE CONSTRUCTED OF A MINIMUM 5-FOOT CONTINUOUS LENGTH OF NATIVE SOIL BACKFILL COMPACTED TO AT LEAST 90% RELATIVE COMPACTION IN ACCORDANCE WITH ASTM D-1557 TESTING PROCEDURES. THE COMPACTED SOIL BACKFILL SHALL EXTEND FROM THE BOTTOM OF THE TRENCH TO A LEVEL AT LEAST 6" ABOVE THE BASE OF THE ADJACENT FOOTING.
4. PIPING AND CONDUIT SHALL BE PROTECTED FROM CORROSION AND STRUCTURAL SETTLEMENT AS FOLLOWS:
 a) TAPE SHALL BE APPLIED ON CONDUIT AND PIPING ENCASED IN CEMENT SLURRY OR CONCRETE.
 b) TAPE SHALL BE PS-37-90, BLACK PLASTIC PVC OR PE PRESSURE-SENSITIVE CORROSION PREVENTATIVE TAPE.
5. WHEN A CONCRETE MIX, OTHER THAN BENTONITE CEMENT SLURRY IS USED FOR TRENCH DAM MATERIAL; THEN A HIGH DENSITY PVC FOAM TAPE, CLOSED CELLS, ADHESIVE BACKED, 1/4" THICK BY 1/2" WIDE SHALL BE APPLIED TO CLEAR SURFACE WITH ENDS BUFFED TOGETHER AT MOST VISIBLE LOCATIONS IN TRENCH DAM.
6. A GAS MIGRATION BARRIER (TRENCH DAM) SHALL BE INSTALLED IN ALL UTILITY TRENCHES THAT EXTEND BENEATH THE FOUNDATION FROM AREAS OUTSIDE THE PERIMETER OF HTE BUILDING.
7. THE GAS MIGRATION BARRIER (TRENCH DAM) SHALL BE INSTALLED IN THE UTILITY TRENCH IMMEDIATELY ADJACENT TO THE EXTERIOR OF THE BUILDING FOUNDATION.

TRENCH DAM SECTION | B

NOTES:
1. THE GAS MIGRATION BARRIER (TRENCH DAM) SHALL BE INSTALLED IN THE UTILITY TRENCH IMMEDIATELY ADJACENT TO THE EXTERIOR OF THE BUILDING FOUNDATION.
2. THE GAS MIGRATION BARRIER (TRENCH DAM) SHALL CONSIST OF ONE OF THE FOLLOWING:
   A) A MINIMUM OF 2-FOOT CONTINUOUS LENGTH OF SAND SLURRY CONSISTING OF A MIXTURE OF 4% TYPE II CEMENT, AND 2% POWDERED BENTONITE BY WEIGHT. THE SLURRY SHALL EXTEND FROM THE BOTTOM OF THE TRENCH TO A LEVEL OF 6-INCHES ABOVE THE BASE OF THE ADJACENT FOOTING.
   B) A MINIMUM OF 5-FOOT CONTINUOUS LENGTH OF NATIVE SOIL BACKFILL COMPACTED TO AT LEAST 90% RELATIVE COMPACTION IN ACCORDANCE WITH ASTM D-1557 TESTING PROCEDURES. THE COMPACTED SOIL BACKFILL SHALL EXTEND FROM THE BOTTOM OF THE TRENCH TO A LEVEL AT LEAST 6" ABOVE THE BASE OF THE ADJACENT FOOTING.

NFPA CODE:

APPLICATION OF SEAL-OFFS AT THIS PROJECT

EYS FITTINGS ARE REQUIRED FOR ANY ELECTRICAL CONDUIT COMING FROM OUTSIDE OF THE MEMBRANE, THROUGH THE MEMBRANE TO THE STRUCTURE, OR DIRECTLY FROM THE SOIL OUTSIDE OF THE BUILDING FOOTPRINT INTO THE STRUCTURE. EYS FITTINGS ARE ALSO REQUIRED FOR ANY ELECTRICAL COMING FROM INSIDE OF THE BUILDING, PENETRATING THE MEMBRANE, AND EXITING THE BUILDING SLAB EDGE. THIS CLASSIFICATION IS FOR 120 VAC OR GREATER, ONLY. FOR COMMUNICATIONS, CABLES, OR OTHER LOW VOLTAGE CIRCUITS, IT IS STILL RECOMMENDED THAT ALL OF THESE RUNS BE MADE ABOVE THE MEMBRANE.

NOTES | C

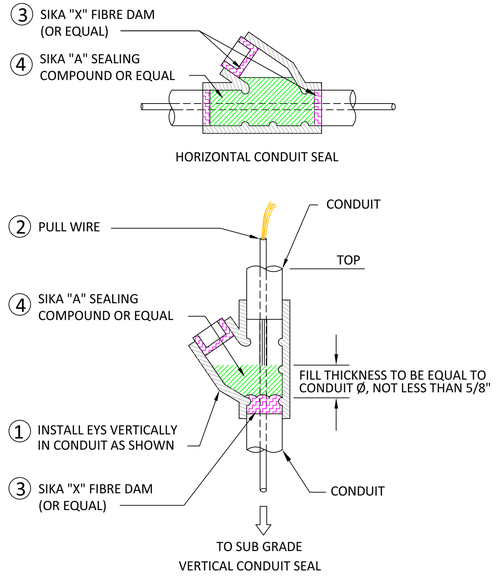

THIS DETAIL IS FOR ELECTRICAL ONLY

NOTE:
WYE SEAL CAN NOT BE USED ON THE MAIN ELECTRIC FEED.

SEAL OFF DETAILS | D

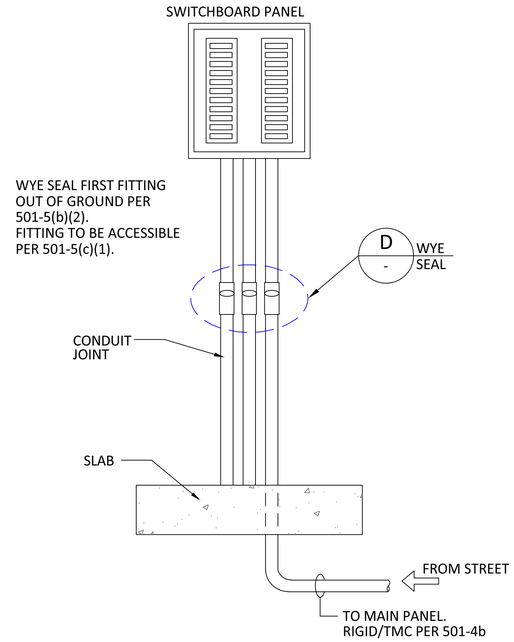

UTILITY POWER FEED SEAL | E

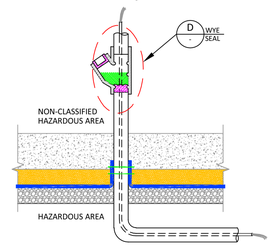

"NOTE: THIS DETAIL IS INTENDED FOR ALL HIGH AND LOW VOLTAGE CONDUITS COMING FROM A CLASSIFIED HAZARDOUS AREA AND ENTERING A NON-CLASSIFIED HAZARDOUS AREA"

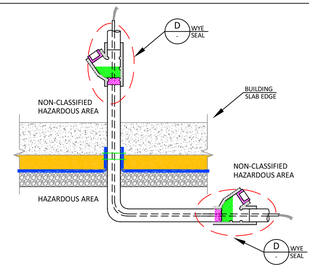

"NOTE:THIS DETAIL IS INTENDED FOR ALL HIGH AND LOW VOLTAGE CONDUITS COMING FROM INSIDE THE BUILDING (UNCLASSIFIED HAZARDOUS AREA), ENTERING BELOW GRADE (A CLASSIFIED HAZARDOUS AREA), AND EXITING THE BUILDING FOOTPRINT (UNCLASSIFIED HAZARDOUS AREA) INTO (I.E. LIGHT POLE OR POWERED GATE)

CONDUIT SEAL | F

IDENTIFICATION STAMP
DIV. OF THE STATE ARCHITECT
APP: 03-121324 INC:
REVIEWED FOR
SS ☐ FLS ☐ ACS ☑
DATE: 09/14/2022

OFFICE OF THE STATE FIRE MARSHAL
APPROVED FIRE AND PANIC ONLY
09/07/22
21-0233
Approval of this plan does not authorize or approve any omission or deviation from applicable regulations. Final approval is subject to field inspection. One set of approved plans shall be available on the project site at all times.

DGS GENERAL SERVICES
Department of General Services
Architecture & Engineering Sections
State of California
Real Estate Services Division
Project Management & Development Branch
707 Third Street, Suite 4-105
West Sacramento, California 95605

REGISTERED PROFESSIONAL ENGINEER
JAY N. ARRIOLA
C-31416
exp. 12-31-22
CIVIL
STATE OF CALIFORNIA

METHANE SPECIALISTS
5210 LEWIS ROAD
SUITE 1
AGOURA HILLS, CA
91301
TEL 805.987.5356
www.methanespecialists.com

Issue

No.	Date	Description
1	9/2/22	

Project
SANTA MARIA FIELD OFFICE REPLACEMENT

2770 SANTA MARIA WAY
SANTA MARIA, CA 93455
SANTA BARBARA COUNTY

DEPT OF MOTOR VEHICLES

Supervisor	Designed	Drawn
K. ARRIOLA	J. KASONDRA	J. KASONDRA

DSA App No. 03-121324
SFM Permit No. 21-S-0233-CP-ER

Sheet Title
TRENCH DAM AND SEAL-OFF DETAILS

Project Number
DGS000000140725

Reference North | Sheet Scale

Sheet Number
C710

Copyright© 2020, California Department of General Services - Real Estate Services Division

RELATIVE BORDER SCALE IN INCHES 0 1 2 3

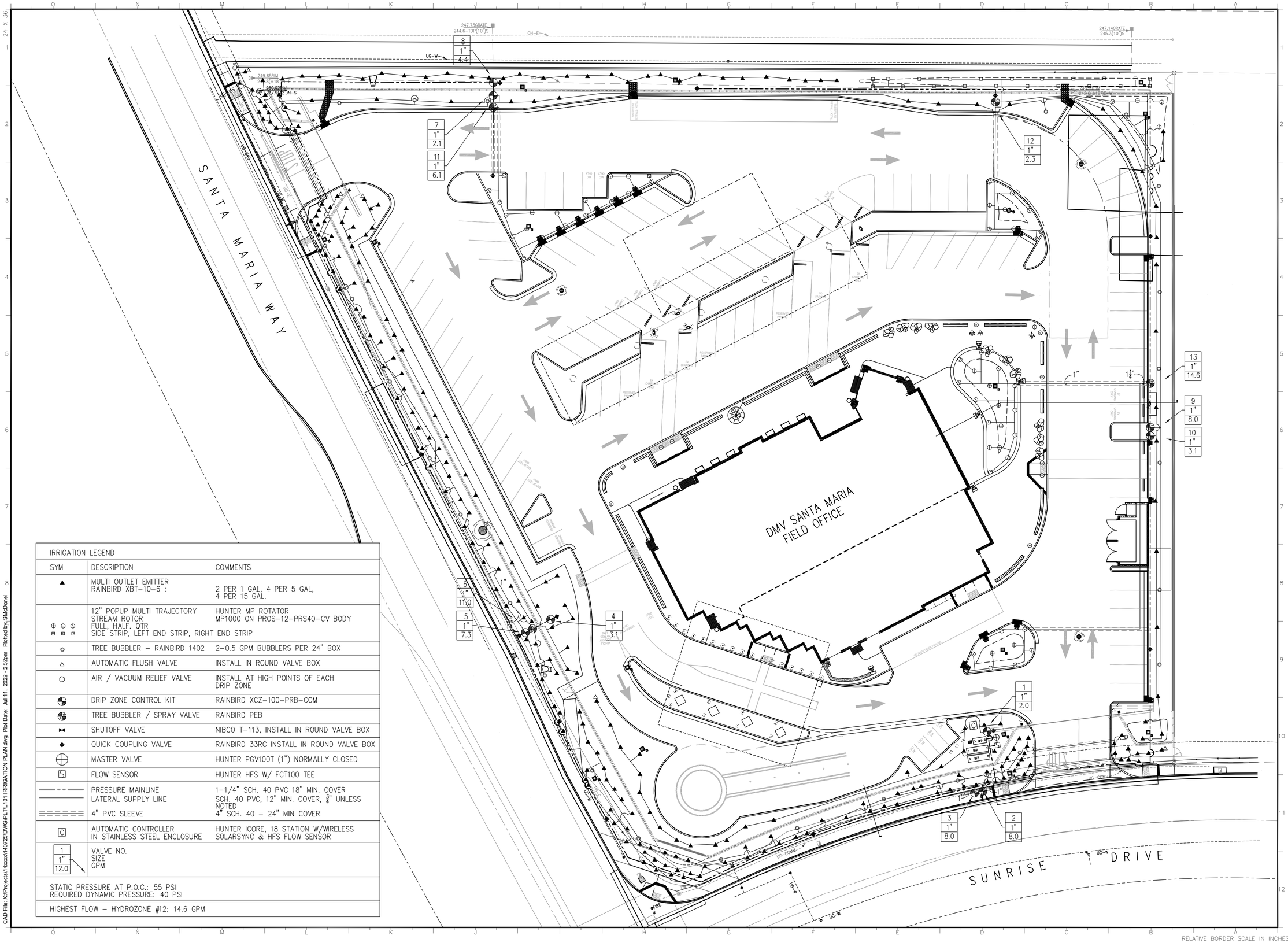

IRRIGATION LEGEND		
SYM	DESCRIPTION	COMMENTS
▲	MULTI OUTLET EMITTER RAINBIRD XBT–10–6 :	2 PER 1 GAL, 4 PER 5 GAL, 4 PER 15 GAL.
⊕ ⊖ ◷ ⊟ ◱ ◲	12" POPUP MULTI TRAJECTORY STREAM ROTOR FULL, HALF. QTR SIDE STRIP, LEFT END STRIP, RIGHT END STRIP	HUNTER MP ROTATOR MP1000 ON PROS–12–PRS40–CV BODY
○	TREE BUBBLER – RAINBIRD 1402	2–0.5 GPM BUBBLERS PER 24" BOX
△	AUTOMATIC FLUSH VALVE	INSTALL IN ROUND VALVE BOX
⬡	AIR / VACUUM RELIEF VALVE	INSTALL AT HIGH POINTS OF EACH DRIP ZONE
◍	DRIP ZONE CONTROL KIT	RAINBIRD XCZ–100–PRB–COM
◍	TREE BUBBLER / SPRAY VALVE	RAINBIRD PEB
⋈	SHUTOFF VALVE	NIBCO T–113, INSTALL IN ROUND VALVE BOX
◆	QUICK COUPLING VALVE	RAINBIRD 33RC INSTALL IN ROUND VALVE BOX
⊕	MASTER VALVE	HUNTER PGV100T (1") NORMALLY CLOSED
⧅	FLOW SENSOR	HUNTER HFS W/ FCT100 TEE
———	PRESSURE MAINLINE	1–1/4" SCH. 40 PVC 18" MIN. COVER
———	LATERAL SUPPLY LINE	SCH. 40 PVC, 12" MIN. COVER, ¾" UNLESS NOTED
═══	4" PVC SLEEVE	4" SCH. 40 – 24" MIN COVER
C	AUTOMATIC CONTROLLER IN STAINLESS STEEL ENCLOSURE	HUNTER ICORE, 18 STATION W/WIRELESS SOLARSYNC & HFS FLOW SENSOR
1 / 1" / 12.0	VALVE NO. SIZE GPM	
STATIC PRESSURE AT P.O.C.: 55 PSI REQUIRED DYNAMIC PRESSURE: 40 PSI		
HIGHEST FLOW – HYDROZONE #12: 14.6 GPM		

IDENTIFICATION STAMP
DIV. OF THE STATE ARCHITECT
APP: 03-121324 INC:
REVIEWED FOR
SS ☐ FLS ☐ ACS ☑
DATE: 09/14/2022

OFFICE OF THE STATE FIRE MARSHAL
APPROVED FIRE AND PANIC ONLY
09/07/22
21-0233
Approval of this plan does not authorize or approve any omission or deviation from applicable regulations. Final approval is subject to field inspection. One set of approved plans shall be available on the project site at all times.

DGS GENERAL SERVICES

Department of General Services
Architecture & Engineering Sections
State of California
Real Estate Services Division
Project Management & Development Branch
707 Third Street, Suite 4-105
West Sacramento, California 95605

REGISTERED PROFESSIONAL ENGINEER
ESMER VELAGIC
No. C-60472
CIVIL
STATE OF CALIFORNIA
03-18-2021

DMV
State of California
Department of Motor Vehicles

Issue		
No.	Date	Description
1	9/2/22	

Project
SANTA MARIA FIELD OFFICE REPLACEMENT
2770 SANTA MARIA WAY
SANTA MARIA, CA 93455
SANTA BARBARA COUNTY

DEPT OF MOTOR VEHICLES

Supervisor	Designed	Drawn
E.VELAGIC	J.TSURUOKA	J.TSURUOKA

DSA App No.	SFM Permit No.
03-121324	21-S-0233-CP-ER

Sheet Title
IRRIGATION PLAN

Project Number
DGS000000140725

Reference North

Sheet Scale
1" = 20'-0"

Sheet Number
L101

© Copyright 2022, California Department of General Services - Real Estate Services Division

RELATIVE BORDER SCALE IN INCHES 0 1 2 3

CAD File: X:\Projects\14xxxx\140725\DWG\PLTL101 IRRIGATION PLAN.dwg Plot Date: Jul 11, 2022 - 2:52pm Plotted by: SMcDonel

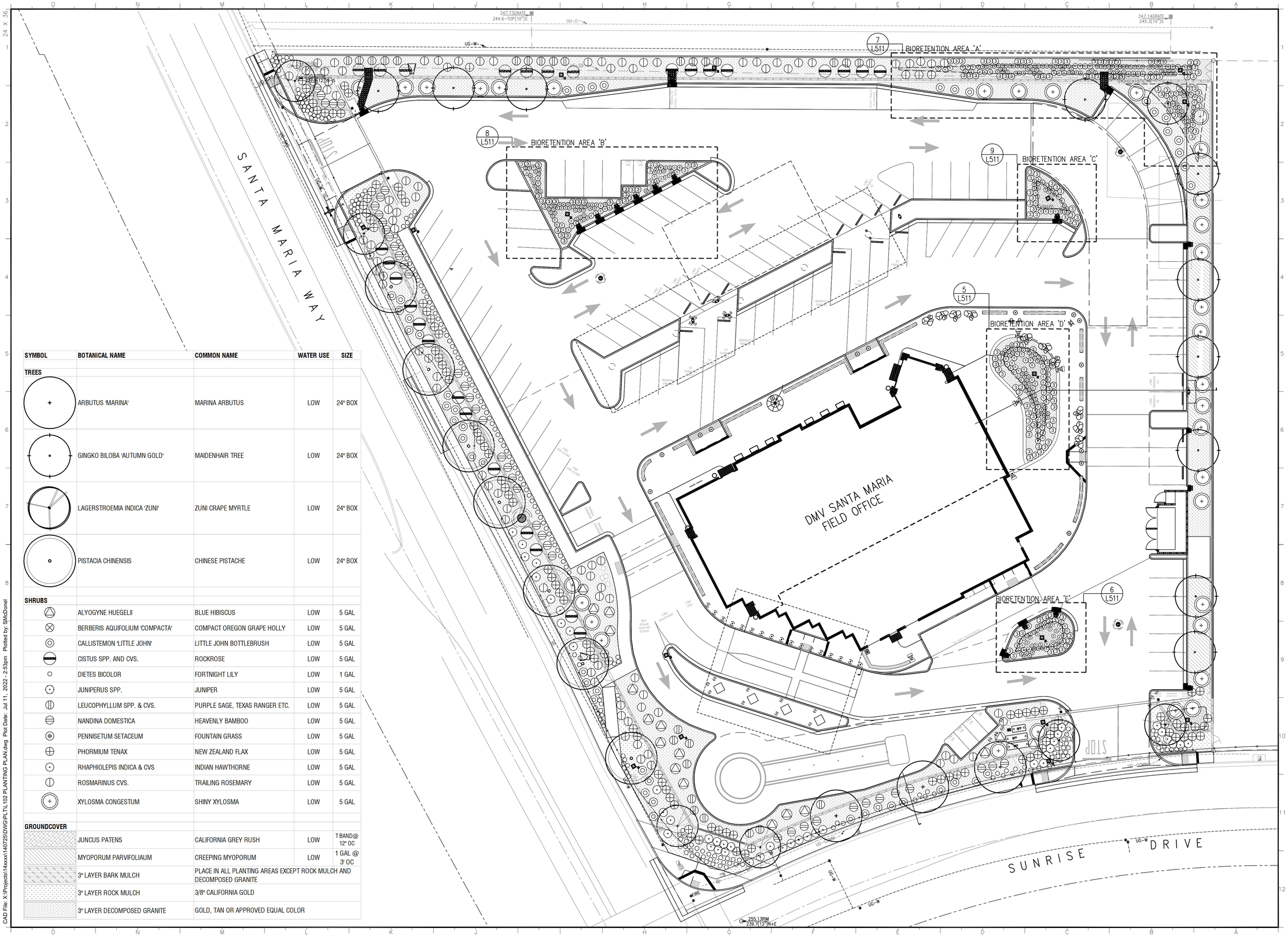

SYMBOL	BOTANICAL NAME	COMMON NAME	WATER USE	SIZE
TREES				
+	ARBUTUS 'MARINA'	MARINA ARBUTUS	LOW	24" BOX
•	GINGKO BILOBA 'AUTUMN GOLD'	MAIDENHAIR TREE	LOW	24" BOX
	LAGERSTROEMIA INDICA 'ZUNI'	ZUNI CRAPE MYRTLE	LOW	24" BOX
○	PISTACIA CHINENSIS	CHINESE PISTACHE	LOW	24" BOX
SHRUBS				
△	ALYOGYNE HUEGELII	BLUE HIBISCUS	LOW	5 GAL
⊗	BERBERIS AQUIFOLIUM 'COMPACTA'	COMPACT OREGON GRAPE HOLLY	LOW	5 GAL
◎	CALLISTEMON 'LITTLE JOHN'	LITTLE JOHN BOTTLEBRUSH	LOW	5 GAL
⬬	CISTUS SPP. AND CVS.	ROCKROSE	LOW	5 GAL
○	DIETES BICOLOR	FORTNIGHT LILY	LOW	1 GAL
⊙	JUNIPERUS SPP.	JUNIPER	LOW	5 GAL
◍	LEUCOPHYLLUM SPP. & CVS.	PURPLE SAGE, TEXAS RANGER ETC.	LOW	5 GAL
⊜	NANDINA DOMESTICA	HEAVENLY BAMBOO	LOW	5 GAL
⊛	PENNISETUM SETACEUM	FOUNTAIN GRASS	LOW	5 GAL
⊕	PHORMIUM TENAX	NEW ZEALAND FLAX	LOW	5 GAL
⊙	RHAPHIOLEPIS INDICA & CVS	INDIAN HAWTHORNE	LOW	5 GAL
◍	ROSMARINUS CVS.	TRAILING ROSEMARY	LOW	5 GAL
⊕	XYLOSMA CONGESTUM	SHINY XYLOSMA	LOW	5 GAL
GROUNDCOVER				
	JUNCUS PATENS	CALIFORNIA GREY RUSH	LOW	T BAND@ 12" OC
	MYOPORUM PARVIFOLIAUM	CREEPING MYOPORUM	LOW	1 GAL @ 3' OC
	3" LAYER BARK MULCH	PLACE IN ALL PLANTING AREAS EXCEPT ROCK MULCH AND DECOMPOSED GRANITE		
	3" LAYER ROCK MULCH	3/8" CALIFORNIA GOLD		
	3" LAYER DECOMPOSED GRANITE	GOLD, TAN OR APPROVED EQUAL COLOR		

IDENTIFICATION STAMP
DIV. OF THE STATE ARCHITECT
APP: 03-121324 INC: A
REVIEWED FOR
SS ☐ FLS ☐ ACS ☑
DATE: 09/14/2022

OFFICE OF THE STATE FIRE MARSHAL
APPROVED FIRE AND PANIC ONLY
09/07/22
21-0233
Approval of this plan does not authorize or approve any omission or deviation from applicable regulations. Final approval is subject to field inspection. One set of approved plans shall be available on the project site at all times.

DGS GENERAL SERVICES
Department of General Services
Architecture & Engineering Sections
State of California
Real Estate Services Division
Project Management & Development Branch
707 Third Street, Suite 4-105
West Sacramento, California 95605

REGISTERED PROFESSIONAL ENGINEER
ESMER VELAGIC
No. C-60472
STATE OF CALIFORNIA
03-18-2021

DMV
State of California
Department of Motor Vehicles

Issue

No.	Date	Description
1	9/2/22	

Project
SANTA MARIA FIELD OFFICE REPLACEMENT
2770 SANTA MARIA WAY
SANTA MARIA, CA 93455
SANTA BARBARA COUNTY

DEPT OF MOTOR VEHICLES

Supervisor	Designed	Drawn
E.VELAGIC	J.TSURUOKA	J.TSURUOKA

DSA App No.	SFM Permit No.
03-121324	21-S-0233-CP-ER

Sheet Title
PLANTING PLAN

Project Number
DGS000000140725

Reference North

Sheet Scale
1" = 20'-0"

Sheet Number
L102

Copyright © 2022, California Department of General Services - Real Estate Services Division

CAD File: X:\Projects\14xxxx\140725\DWG\PLT\L102 PLANTING PLAN.dwg Plot Date: Jul 11, 2022 - 2:53pm Plotted by: SMcDonel

RELATIVE BORDER SCALE IN INCHES 0 1 2 3

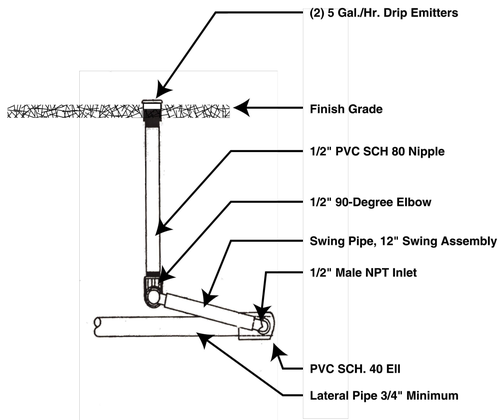

Plate 7	No Scale	TREE DRIP EMITTER	City of Santa Maria Parks Division

5 CITY OF SANTA MARIA TREE DRIP EMITTER DETAIL NO SCALE

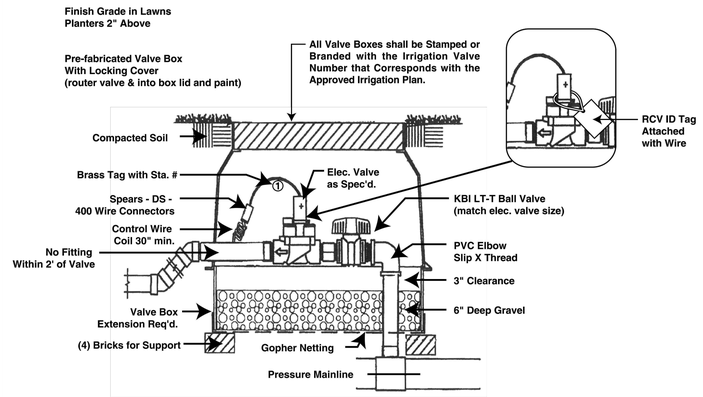

Plate 18	No Scale	ELECTRIC VALVE	City of Santa Maria Parks Division

3 CITY OF SANTA MARIA ELECTRIC VALVE DETAIL NO SCALE

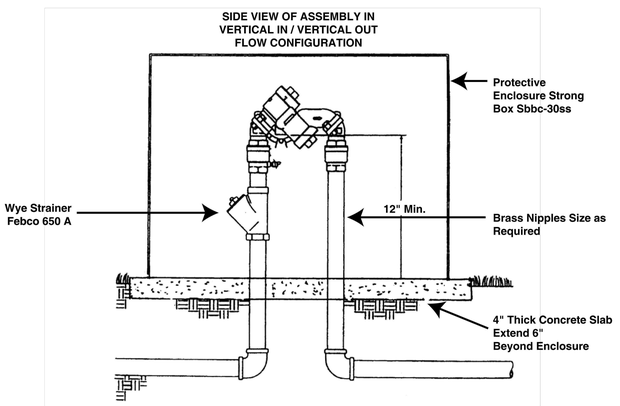

Plate 15	No Scale	BACKFLOW ASSEMBLY FEBCO 825 YA	City of Santa Maria Parks Division

1 CITY OF SANTA MARIA BACKFLOW PREVENTER ASSEMBLY DETAIL NO SCALE

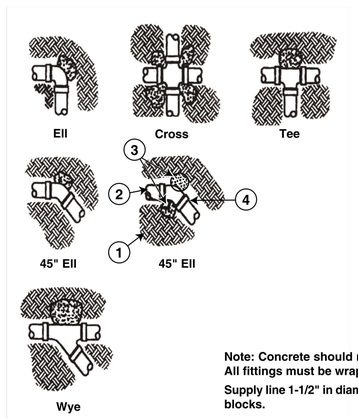

Note: Concrete should not come in contact with PVC or any fitting. All fittings must be wrapped in plastic.

Supply line 1-1/2" in diameter and larger shall receive concrete thrust blocks.

Plate 28	No Scale	THRUST BLOCK	City of Santa Maria Parks Division

6 CITY OF SANTA MARIA THRUST BLOCK DETAIL NO SCALE

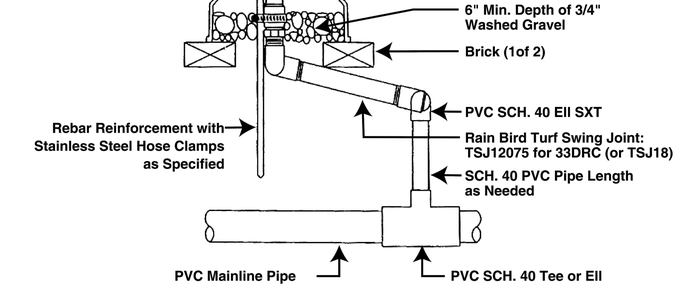

Plate 25	No Scale	QUICK-COUPLING VALVE	City of Santa Maria Parks Division

4 CITY OF SANTA MARIA QUICK-COUPLING VALVE DETAIL NO SCALE

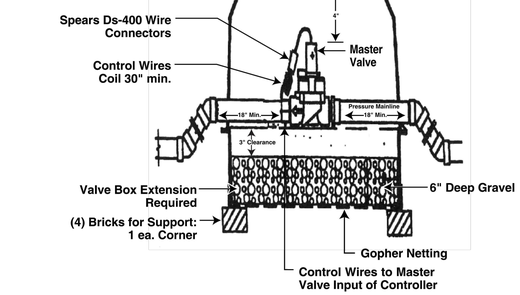

Plate 17	No Scale	MASTER ELECTRIC VALVE	City of Santa Maria Parks Division

2 CITY OF SANTA MARIA MASTER ELECTRIC VALVE DETAIL NO SCALE

IDENTIFICATION STAMP
DIV. OF THE STATE ARCHITECT
APP: 03-121324 INC:
REVIEWED FOR
SS ☐ FLS ☐ ACS ☑
DATE: 09/14/2022

OFFICE OF THE STATE FIRE MARSHAL
APPROVED FIRE AND PANIC ONLY
09/07/22
21-0233
Approval of this plan does not authorize or approve any omission or deviation from applicable regulations. Final approval is subject to field inspection. One set of approved plans shall be available on the project site at all times.

DGS GENERAL SERVICES
Department of General Services
Architecture & Engineering Sections
State of California
Real Estate Services Division
Project Management & Development Branch
707 Third Street, Suite 4-105
West Sacramento, California 95605

REGISTERED PROFESSIONAL ENGINEER
ESMER VELAGIC
No. C-60472
CIVIL
STATE OF CALIFORNIA
03-18-2021

DMV
State of California
Department of Motor Vehicles

Issue

No.	Date	Description
1	9/2/22	

Project
SANTA MARIA FIELD OFFICE REPLACEMENT
2770 SANTA MARIA WAY
SANTA MARIA, CA 93455
SANTA BARBARA COUNTY
DEPT OF MOTOR VEHICLES

Supervisor	Designed	Drawn
E.VELAGIC	J.TSURUOKA	J.TSURUOKA

DSA App No. 03-121324
SFM Permit No. 21-S-0233-CP-ER

Sheet Title
IRRIGATION DETAILS

Project Number
DGS000000140725

Reference North
Sheet Scale AS NOTED
Sheet Number L501

Copyright © 2022, California Department of General Services - Real Estate Services Division

CAD File: X:\Projects\140xxxx\140725\DWG\PLTL501 IRRIGATION NOTES AND DETAILS.dwg Plot Date: Jul 11, 2022 - 2:54pm Plotted by: SMcDonel

RELATIVE BORDER SCALE IN INCHES 0 1 2 3

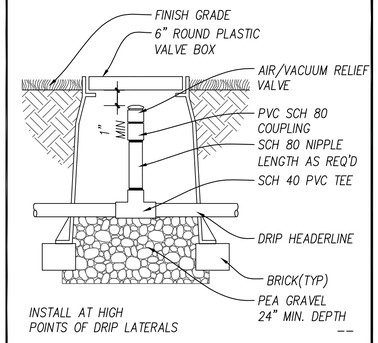

2 AIR RELIEF VALVE — NTS

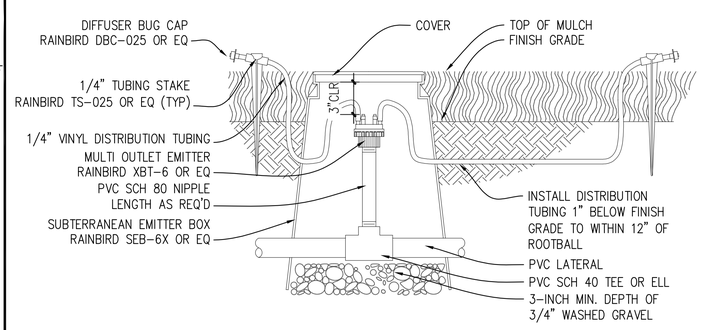

1 MULTI OUTLET DRIP EMITTER — NTS

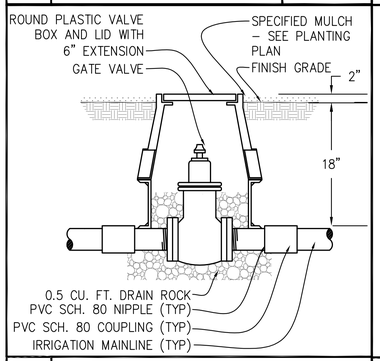

4 GATE VALVE

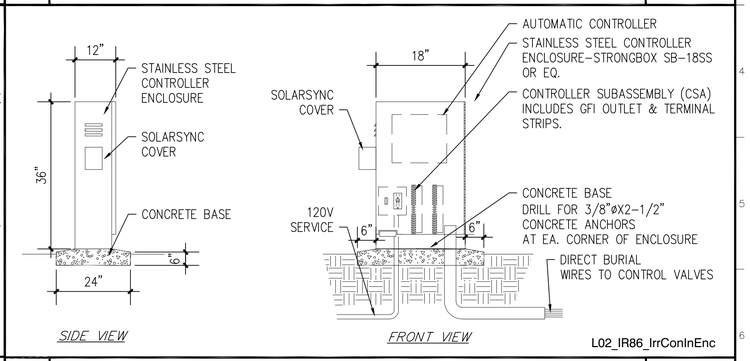

L02_IR86_IrrConInEnc

3 AUTOMATIC CONTROLLER IN ENCLOSURE — NTS

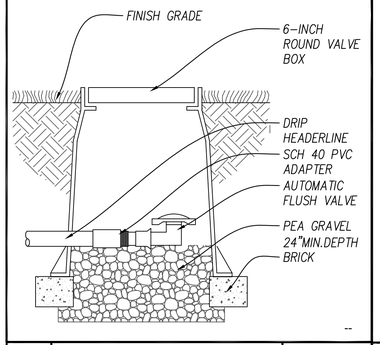

6 AUTOMATIC FLUSH VALVE — NTS

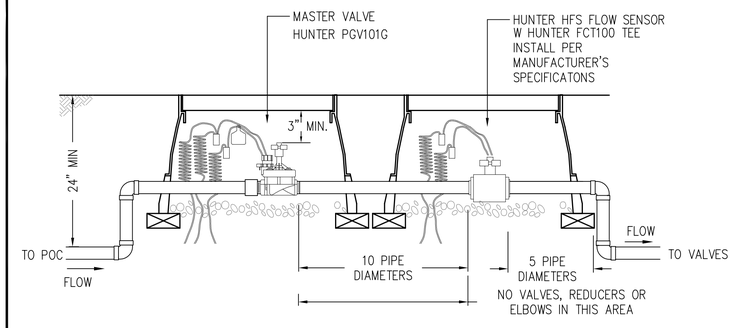

5 MASTER VALVE / FLOW SENSOR ASSEMBLY — NTS

WATER EFFICIENT LANDSCAPE WORKSHEET

HYDROZONE #	PLANT FACTOR	IRRIGATION METHOD	IRRIGATION EFFICIENCY	ETAF (PF/IE)	LANDSCAPE AREA	ETAF X AREA	EST. TOTAL WATER USE (ETWU)	
REGULAR LANDSCAPE AREAS								
1	0.3	DRIP	0.81	0.37	2680	993	29170	
2	0.3	TREE BUBBLER	0.81	0.37	510	189	5551	
3	0.3	DRIP	0.81	0.37	2710	1004	29497	
4	0.3	DRIP	0.81	0.37	2650	981	28844	
5	0.3	DRIP	0.81	0.37	3510	1300	38204	
6	0.3	TREE BUBBLER	0.81	0.37	700	259	7619	
7	0.3	DRIP	0.81	0.37	4110	1522	44735	
8	0.3	DRIP	0.81	0.37	2680	993	29170	
9	0.3	TREE BUBBLER	0.81	0.37	510	189	5551	
10	0.3	DRIP	0.81	0.37	2780	1030	30259	
11	0.5	SPRAY	0.75	0.67	1000	667	19592	
12	0.5	SPRAY	0.75	0.67	470	313	9208	
13	0.5	SPRAY	0.75	0.67	1630	1087	31935	
ETO: 47.4				TOTALS	25940	10526	309336	
						ETWU TOTAL	309336	GALLONS
PLANT FACTOR LOW WATER USE PLANTS: 0.3						MAWA	533627	GALLONS
NO SPECIAL LANDSCAPE AREAS PRESENT								
NO LAWN PRESENT								

ETAF CALCULATIONS	
TOTAL ETAF X AREA	10526
AREA	25940
AVERAGE ETAF	0.41

7 WATER EFFICIENT LANDSCAPE WORKSHEET & ETAF CALCULATION — NO SCALE

IDENTIFICATION STAMP
DIV. OF THE STATE ARCHITECT
APP: 03-121324 INC: A
REVIEWED FOR
SS ☐ FLS ☐ ACS ☑
DATE: 09/14/2022

OFFICE OF THE STATE FIRE MARSHAL
APPROVED FIRE AND PANIC ONLY
09/07/22
21-0233
Approval of this plan does not authorize or approve any omission or deviation from applicable regulations. Final approval is subject to field inspection. One set of approved plans shall be available on the project site at all times.

DGS GENERAL SERVICES

Department of General Services
Architecture & Engineering Sections
State of California
Real Estate Services Division
Project Management & Development Branch
707 Third Street, Suite 4-105
West Sacramento, California 95605

REGISTERED PROFESSIONAL ENGINEER
ESMER VELAGIC
No. C-60472
CIVIL
STATE OF CALIFORNIA
03-18-2021

DMV
State of California
Department of Motor Vehicles

Issue

No.	Date	Description
1	9/2/22	

Project
SANTA MARIA FIELD OFFICE REPLACEMENT
2770 SANTA MARIA WAY
SANTA MARIA, CA 93455
SANTA BARBARA COUNTY
DEPT OF MOTOR VEHICLES

Supervisor	Designed	Drawn
E.VELAGIC	J.TSURUOKA	J.TSURUOKA

DSA App No. 03-121324
SFM Permit No. 21-S-0233-CP-ER

Sheet Title
IRRIGATION DETAILS

Project Number
DGS000000140725

Reference North
Sheet Scale 1" = 10'-0"
Sheet Number L502

Copyright © 2022, California Department of General Services - Real Estate Services Division

CAD File: X:\Projects\14xxxx\140725\DWG\PLTL502 IRRIGATION NOTES AND DETAILS.dwg Plot Date: Jul 11, 2022 - 2:55pm Plotted by: SMcDonel

RELATIVE BORDER SCALE IN INCHES 0 1 2 3

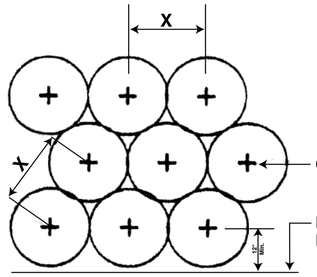

Note:

1. "X" is groundcover and shrub spacing as per landcape plan, plant list and legend.
2. Keep mulch clear of plant base.

Plate	No Scale	SHRUB & GROUNDCOVER LAYOUT	City of Santa Maria Parks Division
14			

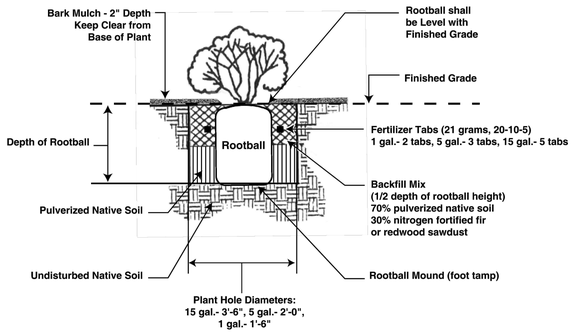

Plate	No Scale	SHRUB & GROUNDCOVER PLANTING	City of Santa Maria Parks Division
13			

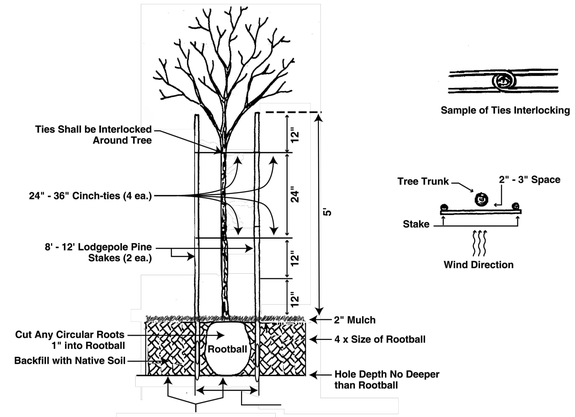

Plate	No Scale	TREE PLANTING SPECIFICATIONS	City of Santa Maria Parks Division
8			

3 CITY OF SANTA MARIA SHRUB & GROUNDCOVER LAYOUT — NO SCALE

2 CITY OF SANTA MARIA SHRUB PLANTING — NO SCALE

1 CITY OF SANTA MARIA TREE PLANTING — NO SCALE

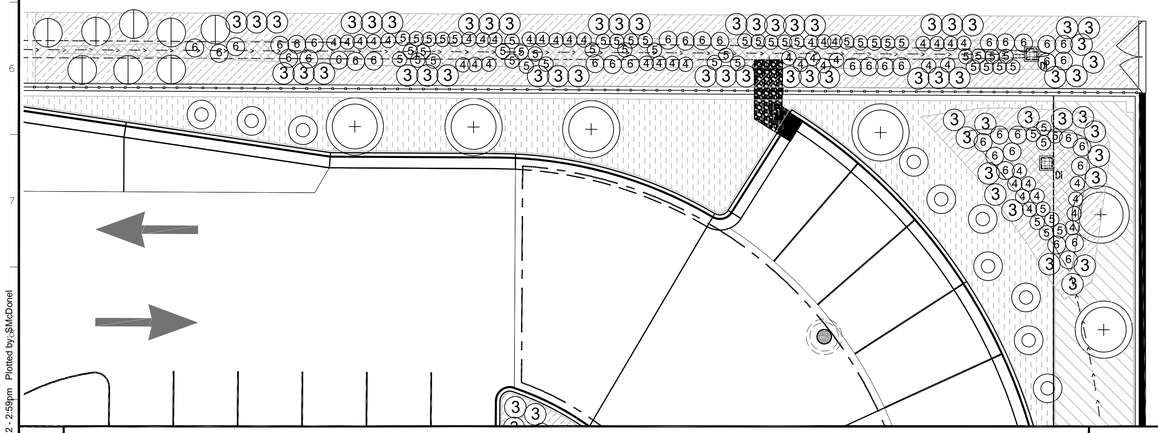

7 BIORETENTION AREA 'A' — 1"=10'-0"

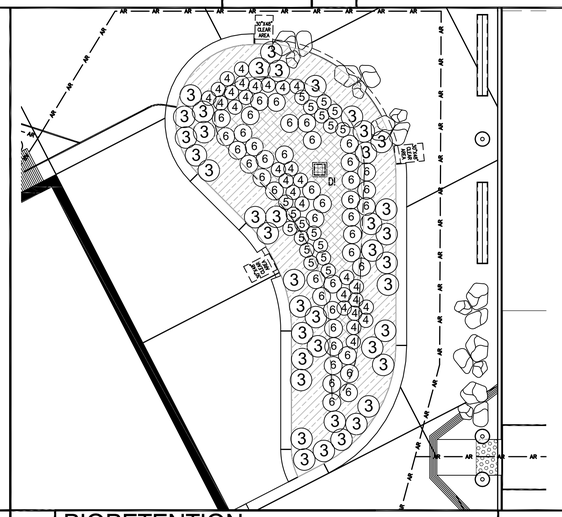

5 BIORETENTION AREA 'D' — 1"=10'-0"

BIORETENTION AREA PLANTING LEGEND

SYM	BOTANICAL / COMMON NAME	SIZE
4	ACHILLEA MILLEFOLIUM / YARROW	TREEBANDS
5	IRIS DOUGLASIANA / DOUGLAS IRIS	1 GALLON
3	MUHLENBERGIA RIGENS / DEERGRASS	1 GALLON
6	SALVIA SPATHACEA / HUMMINGBIRD SAGE	1 GALLON
	CAREX PANSA / CALIF. MEADOW SEDGE	LINERS @ 12"OC
	ELYMUS GLAUCUS / BLUE WILD RYE	LINERS @ 12" OC

4 BIORETENTION PLANTING LEGEND — NO SCALE

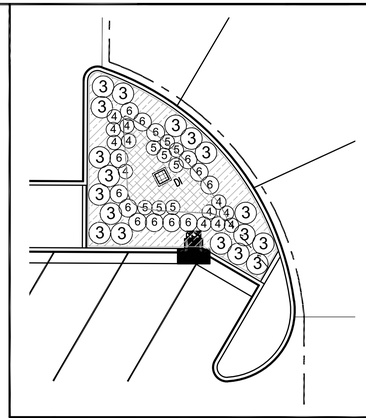

9 BIORETENTION AREA 'C' — 1"=10'-0"

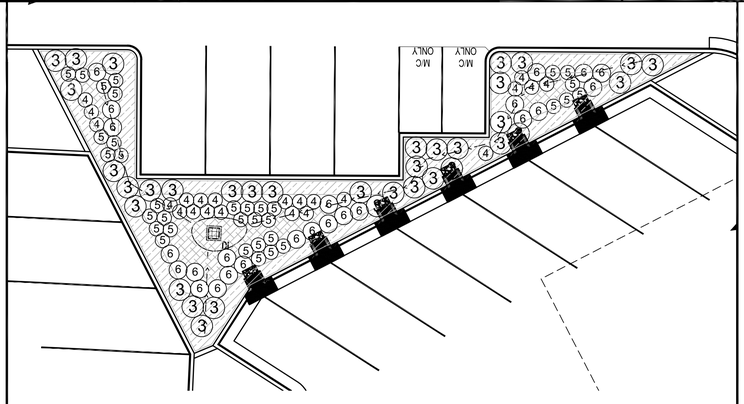

8 BIORETENTION AREA 'B' — 1"=10'-0"

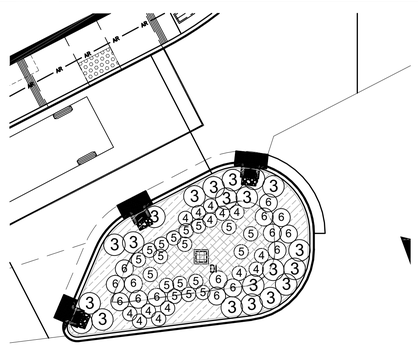

6 BIORETENTION AREA 'E' — 1"=10'-0"

IDENTIFICATION STAMP
DIV. OF THE STATE ARCHITECT
APP: 03-121324 INC:
REVIEWED FOR
SS ☐ FLS ☐ ACS ☑
DATE: 09/14/2022

OFFICE OF THE STATE FIRE MARSHAL
APPROVED FIRE AND PANIC ONLY
09/07/22
21-0233
Approval of this plan does not authorize or approve any omission or deviation from applicable regulations. Final approval is subject to field inspection. One set of approved plans shall be available on the project site at all times.

DGS GENERAL SERVICES
Department of General Services
Architecture & Engineering Sections
State of California
Real Estate Services Division
Project Management & Development Branch
707 Third Street, Suite 4-105
West Sacramento, California 95605

REGISTERED PROFESSIONAL ENGINEER — ESMER VELAGIC — No. C-60472 — CIVIL — STATE OF CALIFORNIA
03-18-2021

DMV
State of California
Department of Motor Vehicles

Issue		
No.	Date	Description
1	9/2/22	

Project
SANTA MARIA FIELD OFFICE REPLACEMENT
2770 SANTA MARIA WAY
SANTA MARIA, CA 93455
SANTA BARBARA COUNTY
DEPT OF MOTOR VEHICLES

Supervisor	Designed	Drawn
E.VELAGIC	J.TSURUOKA	J.TSURUOKA

DSA App No.	SFM Permit No.
03-121324	21-S-0233-CP-ER

Sheet Title
PLANTING NOTES AND DETAILS

Project Number
DGS000000140725

Reference North | Sheet Scale AS NOTED | Sheet Number L511

© Copyright 2022, California Department of General Services - Real Estate Services Division

CAD File: X:\Projects\14xxxx\140725\DWG\PLTL511 PLANTING NOTES AND DETAILS.dwg Plot Date: Jul 11, 2022 - 2:59pm Plotted by:SMcDonel

RELATIVE BORDER SCALE IN INCHES 0 1 2 3

ARCHITECTURAL ABBREVIATIONS

℄	CENTERLINE
⌀	DIAMETER OR ROUND
#	NUMBER
AC	ASPHALT CONCRETE
ACM	ASBESTOS CONTAINING MATERIAL
ACT	ACCOUSTIC CEILING TILE
AFF	ABOVE FINISH FLOOR
AHU	AIR HANDLING UNIT
AR	ACCESSIBLE ROUTE
ARCH	ARCHITECTURAL
ASB	ASBESTOS
AVG	AVERAGE
BD	BOARD
BLDG	BUILDING
BO	BOTTOM OF
BOT	BOTTOM
C	DEGREE CELCIUS
CATV	CABLE TELEVISION
CCTV	CLOSED-CIRCUIT TELEVISION
CF	CUBIC FEET
CFOI	CONTRACTOR FURNISHED OWNER INSTALLED
CJ	CONTROL JOINT
CI	CAST IRON
CLG	CEILING
CMU	CONCRETE MASONRY UNIT
COL	COLUMN
COMP	COMPOSITION
CONC	CONCRETE
CONT	CONTINUATION OR CONTINUOUS
CORR	CORRIDOR
DBL	DOUBLE
DEPT	DEPARTMENT
DF	DRINKING FOUNTAIN
DIA	DIAMETER
DIM	DIMENSION
DISP	DISPENSER
DN	DOWN
DR	DOOR
DS	DOWNSPOUT
DW	DISH WASHER
DWG	DRAWING
E	EAST
(E)	EXISTING
EA	EACH
EJ	EXPANSION JOINT
EL	ELEVATION
ELEC	ELECTRICAL
ELEV	ELEVATOR
EMER	EMERGENCY
EQ	EQUAL
EXP	EXPANSION
EXT	EXTERIOR
FA	FIRE ALARM
FAAP	FIRE ALARM ANNUNCIATOR PANEL
FACP	FIRE ALARM CONTROL PANEL
FD	FLOOR DRAIN
FE	FIRE EXTINGUISHER
FEC	FIRE EXTINGUISHER CABINET
FF	FINISH FLOOR
FG	FINISH GRADE
FLR	FLOOR
FO	FACE OF
FOF	FACE OF FINISH
FOS	FACE OF STUD
FRP	FIBERGLASS REINFORCED PLASTIC
FRZR	FREEZER
FS	FLOOR SINK
FT	FOOT OR FEET
FTG	FOOTING
FV	FIELD VERIFY
GA	GAUGE
GAL	GALLON
GALV	GALVANIZED
GB	GRAB BAR
GI	GLAVANIZED IRON
GSM	GALVANIZED SHEET METAL
GSP	GALVANIZED STEEL PIPE
GYP	GYPSUM
GYPBD	GYPSUM BOARD
HB	HOSE BIBB
HM	HOLLOW METAL
HORIZ	HORIZONTAL
HT	HEIGHT
HVAC	HEATING, VENTILATION, AND AIR CONDITIONING
ID	INSIDE DIAMETER
IN	INCH
INSUL	INSULATION
INT	INTERIOR
JB	JUNCTION BOX
JAN	JANITOR
JT	JOINT
KIT	KITCHEN
L	LENGTH
LAB	LABORATORY
LAV	LAVATORY
LB	POUND
LTG	LIGHTING
M	METER
MAX	MAXIMUM
MC	MEDICINE CABINET
MECH	MECHANICAL
MEMB	MEMBRANE
MFR	MANUFACTURER
MIN	MINIMUM
MISC	MISCELLANEOUS
MM	MILLIMETER
MTD	MOUNTED
MTL	METAL
MUL	MULLION
N	NORTH
NIC	NOT IN CONTRACT
NOM	NOMINAL
NTS	NOT TO SCALE
OC	ON CENTER
OD	OUTSIDE DIAMETER
OFCI	OWNER FURNISHED CONTRACTOR INSTALLED
OFOI	OWNER FURNISHED OWNER INSTALLED
OFF	OFFICE
OH	OPPOSITE HAND
OPP	OPPOSITE
O/	OVER
PL	PROPERTY LINE OR PLATE
PL	PLANTER
PLAM	PLASTIC LAMINATE
PLAS	PLASTER
PLWD	PLYWOOD
POT	PATH OF TRAVEL
PR	PAIR
PRTL	PARTIAL
PSI	POUNDS PER SQUARE INCH
PT	PRESSURE TREATED
PTD	PAPER TOWEL DISPENSER
PVC	POLYVINYL CHLORIDE
QT	QUARRY TILE
R	RADIUS
RAF	RAISED ACCESS FLOOR
RCP	REFLECTED CEILING PLAN
RD	ROOF DRAIN
REF	REFERENCE
REFR	REFRIGERATOR
REINF	REINFORCED
REQ'D	REQUIRED
RO	ROUGH OPENING
RR	RESTROOM
RWD	REDWOOD
RWL	RAIN WATER LEADER
S	SOUTH
SCD	SEAT COVER DISPENSER
SCHED	SCHEDULE
SD	SOAP DISPENSER
SDST	SELF DRILLING SELF TAPPING
SF	SQUARE FEET, SQUARE FOOT
SIM	SIMILAR
SMS	SHEET METAL SCREW
SND	SANITARY NAPKIN DISPENSER
SNR	SANITARY NAPKIN RECEPTACLE
SQ	SQUARE
SSC	SOLID SURFACE COUNTERTOP
SS	SERVICE SINK
SST	STAINLESS STEEL
STL	STEEL
STD	STANDARD
STOR	STORAGE
STRUCT	STRUCTURAL
SUPPL	SUPPLEMENTAL
T	TREAD
T&B	TOP AND BOTTOM
T&G	TONGUE AND GROOVE
TB	TOWEL BAR
TEL	TELEPHONE
TEMP	TEMPORARY
TER	TERRAZZO
THK	THICK
TJ	TOOLED JOINT
TO	TOP OF
TPD	TOILET PAPER DISPENSER
TV	TELEVISION
TYP	TYPICAL
UON	UNLESS OTHERWISE NOTED
UR	URINAL
VCT	VINYL COMPOSITION TILE
VERT	VERTICAL
VEST	VESTIBULE
VIF	VERIFY IN FIELD
W	WEST
W/	WITH
W/O	WITHOUT
WC	WATER CLOSET
WNW	WINDOW
WD	WOOD
WH	WATER HEATER
WP	WATER PROOF
WR	WATER RESISTANT
WT	WEIGHT
WWF	WELDED WIRE FABRIC
YD	YARD

NOTE: ADDITIONAL ABBREVIATIONS MAY BE FOUND IN OTHER DISCIPLINES

ARCHITECTURAL MATERIALS

- EARTH
- POROUS FILL
- CONCRETE
- BRICK
- CONCRETE BLOCK
- METAL
- CONTINUOUS WOOD
- SHIM OR NON-CONT. WOOD BLKING
- FINISH WOOD
- PLYWOOD
- GYPSUM WALLBOARD
- STONE
- RIGID INSULATION
- BATT INSULATION
- ACOUSTIC TILE
- PLASTER ON METAL LATH
- TILE
- SEALANT W/ BACK-UP MATERIAL

ARCHITECTURAL SYMBOLS

CENTERLINE

BREAK LINE

MATCH LINE

ELEVATION MARK OR DATUM POINT — T.O.PARAPET 24'-0"

WALL TYPE (SEE A611) — 1S4A

REVISION CLOUD (EXTENT OF REVISION)

REVISION IDENTIFIER — 1

GRID LINE — D

NORTH ARROW

ROOM NAME AND NUMBER — OFFICE 100

DOOR NUMBER — 100

WINDOW TYPE — 1t

KEYNOTE REFERENCE — 1

SIGN DESIGNATION — S1

EXTERIOR ELEVATION REFERENCE — EAST, 1, A211

SECTION REFERENCE — 1, A311 — SECTION NUMBER, SHEET NUMBER

DETAIL REFERENCE — 2, A541

INTERIOR ELEVATION REFERENCE — 1, 2, 3, 4, A221 — ELEVATION NUMBER, SHEET NUMBER

ALIGN SURFACES

GENERAL NOTES

1. THESE GENERAL NOTES APPLY TO THE ARCHITECTURAL DRAWINGS AND SHALL GOVERN UNLESS NOTED OTHERWISE BY GENERAL NOTES OR KEYNOTES ON SPECIFIC SHEETS.
2. CONTRACTOR SHALL NOT SCALE DRAWINGS. IF A DIMENSION IS NOT PROVIDED, CONSULT THE ARCHITECT FOR DIRECTION.
3. ALL ELEMENTS SHALL BE CONSTRUCTED IN CONFORMANCE WITH THE AMERICANS DISABILITIES ACT (ADA), 2010 ADA STANDARDS FOR ACCESSIBLE DESIGN (ADAS), AND THE 2019 CALIFORNIA BUILDING CODE, CHAPTER 11B. WHERE THESE REGULATIONS CONFLICT, ADHERENCE TO THE PROVISION THAT PROVIDES THE HIGHEST DEGREE OF ACCESS IS REQUIRED.
4. WITHIN THE AREA OF WORK, THE CONTRACTOR SHALL CLEAN, PATCH & REPAIR ANY DAMAGE DONE DURING CONSTRUCTION TO THE EXISTING FACILITY AND RESTORE ANY DAMAGED FINISH TO MATCH EXISTING ADJACENT FINISH.
5. SEE DETAIL 9/A504 FOR DIMENSION AND TOLERANCE REQUIREMENTS.
6. ALL DIMENSIONS FOR METAL STUDS ARE TO FACE OF STUD UNLESS OTHERWISE NOTED.

IDENTIFICATION STAMP
DIV. OF THE STATE ARCHITECT
APP: 03-121324 INC:
REVIEWED FOR
SS ☐ FLS ☐ ACS ☑
DATE: 09/14/2022

OFFICE OF THE STATE FIRE MARSHAL
APPROVED FIRE AND PANIC ONLY
09/07/22
21-0233
Approval of this plan does not authorize or approve any omission or deviation from applicable regulations. Final approval is subject to field inspection. One set of approved plans shall be available on the project site at all times.

DGS GENERAL SERVICES
Department of General Services
Architecture & Engineering Sections
State of California
Real Estate Services Division
Project Management & Development Branch
707 Third Street, Suite 4-105
West Sacramento, California 95605

LICENSED ARCHITECT
JEREMY K. KHOO
C-35651
REN. 05/31/23
STATE OF CALIFORNIA

DMV
State of California
Department of Motor Vehicles

Issue

No.	Date	Description
1	9/2/22	

Project
SANTA MARIA FIELD OFFICE REPLACEMENT
2770 SANTA MARIA WAY
SANTA MARIA, CA 93455
SANTA MARIA COUNTY

DEPT OF MOTOR VEHICLES

Supervisor	Designed	Drawn
MG	GP	JK

DSA App No. 03-121324
SFM Permit No. 21-S-0233-CP-ER

Sheet Title
ARCHITECTURAL ABBREVIATIONS, SYMBOLS, & MATERIALS

Project Number
DGS000000140725

Sheet Scale

Sheet Number
A001

Copyright © 2020, California Department of General Services, Real Estate Services Division

C:\Projects\000000000140725_ARC_Project Master_22_Jeremy.Khoo59F93.rvt
7/12/2022 11:58:10 AM

RELATIVE BORDER SCALE IN INCHES

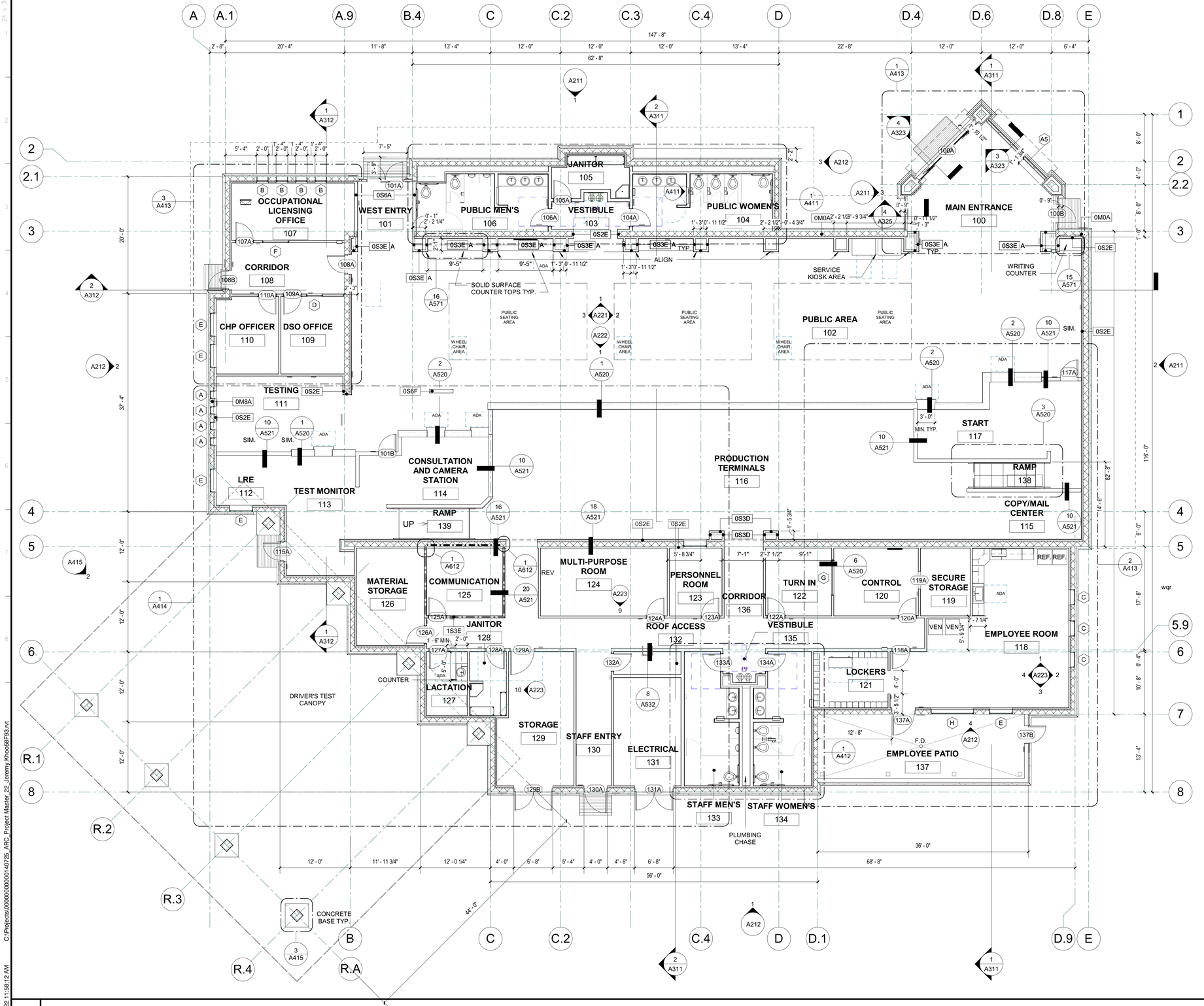

GENERAL NOTES

1. ARCHITECTURAL DIMENSIONS ARE TO FACE OF STUDS/STRUCTURE OR CENTERLINE OF COLUMNS GRIDS, UNLESS NOTED OTHERWISE
2. LOCATE DOOR JAMBS 4" AWAY FROM ADJACENT WALLS UNLESS OTHERWISE DIMENSIONED.
3. ROOMS WITH FLOOR DRAINS (FD), SLOPE MAX 2% TO DRAIN
4. FOR TYPICAL BACKING/BLOCKING AT VARIOUS FIXTURES, ACCESSORIES, EQUIPMENT, CASEWORK,ETC.
5. INSTALL THERMAL INSULATION ON ALL EXTERIOR WALLS TO UNDERSIDE OF ROOF
6. FOR TOILET ACCESSORY MOUNTING HEIGHTS SEE 3 / A504
7. SEMI-RECESSED FIRE EXTINGUISHER CABINETS SEE 6 / A502 10 / A612

LEGEND

- DOOR, SEE DOOR SCHEDULE ON SHEET 8 / A621
- WINDOW, SEE WINDOW SCHEDULE ON SHEET 1 / A631
- 0S4A X — WALL TYPES PER 1 / A611
- MASONRY WALL WITH METAL INSULATED WALL WITH RIGID INSULATION AND GYP. BD. ON INTERIOR METAL STUD FURRING
- METAL STUD WALL
- 1 HR RATED METAL STUD BARRIER WALL
- 1t — WINDOW TYPE, SEE 1 / A631
- 101 — DOOR NUMBER, SEE DOOR SCHEDULE FOR TYPES 8 / A621
- 0 — GRID LINE & NUMBER
- WALK OFF MATS

1 FLOOR PLAN — 1/8" = 1'-0"

IDENTIFICATION STAMP
DIV. OF THE STATE ARCHITECT
APP: 03-121324 INC:
REVIEWED FOR
SS ☐ FLS ☐ ACS ☑
DATE: 09/14/2022

OFFICE OF THE STATE FIRE MARSHAL
APPROVED FIRE AND PANIC ONLY
09/07/22
21-0233
Approval of this plan does not authorize or approve any omission or deviation from applicable regulations. Final approval is subject to field inspection. One set of approved plans shall be available on the project site at all times.

DGS GENERAL SERVICES
Department of General Services
Architecture & Engineering Sections
State of California
Real Estate Services Division
Project Management & Development Branch
707 Third Street, Suite 4-105
West Sacramento, California 95605

LICENSED ARCHITECT
JEREMY K. KHOO
C-35651
REN. 05/31/23
STATE OF CALIFORNIA

DMV
State of California
Department of Motor Vehicles

Issue		
No.	Date	Description
1	9/2/22	

Project
SANTA MARIA FIELD OFFICE REPLACEMENT
2770 SANTA MARIA WAY
SANTA MARIA, CA 93455
SANTA MARIA COUNTY

DEPT OF MOTOR VEHICLES

Supervisor	Designed	Drawn
MG	GP	JK

DSA App No. 03-121324
SFM Permit No. 21-S-0233-CP-ER

Sheet Title
ARCHITECTURAL FLOOR PLAN

Project Number
DGS000000140725

Sheet Scale
Sheet Number
A111

Copyright © 2020, California Department of General Services- Real Estate Services Division

C:\Projects\000000000140725_ARC_Project Master_22_Jeremy.Khoo58F93.rvt
7/12/2022 11:58:12 AM
RELATIVE BORDER SCALE IN INCHES

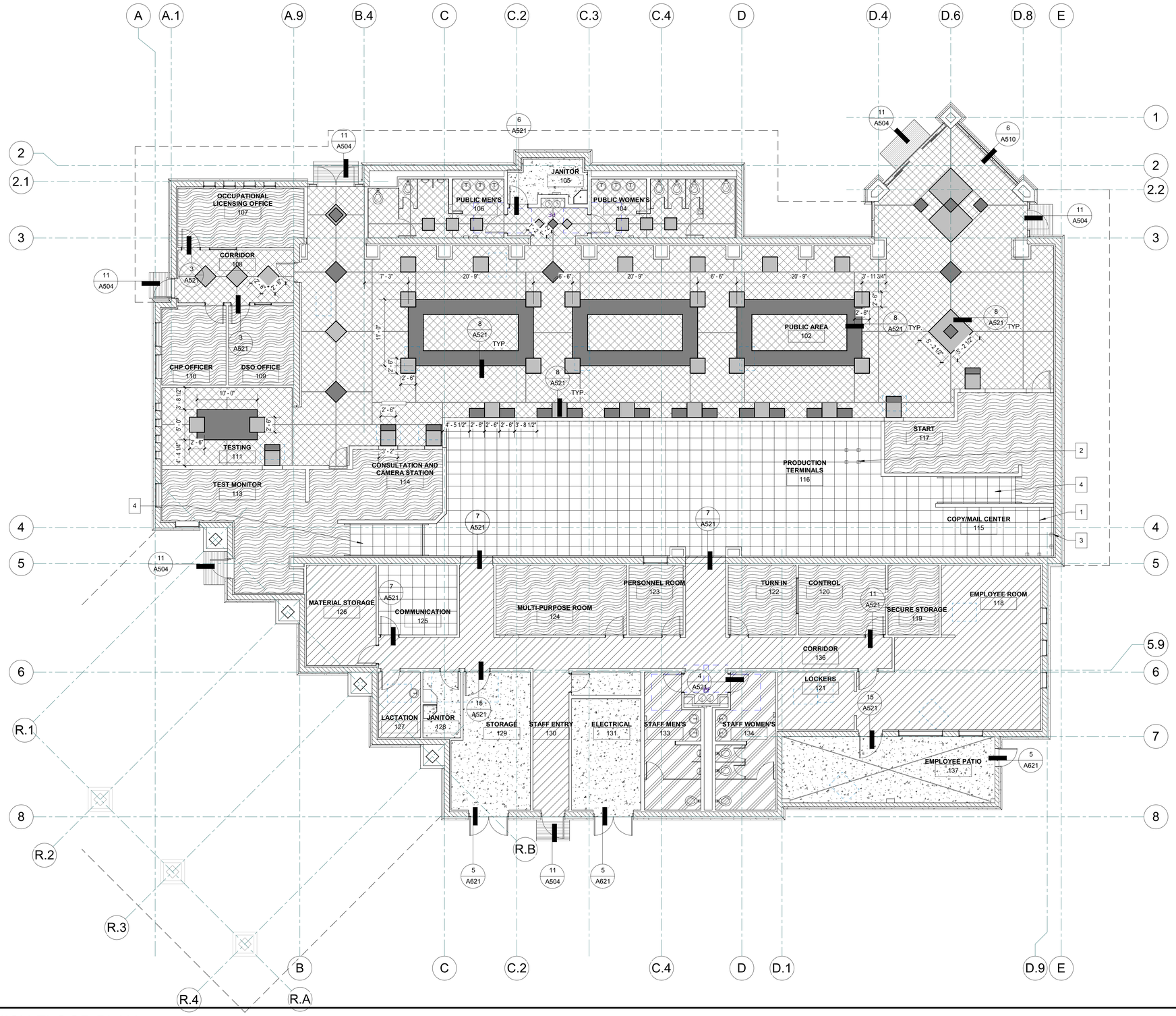

LEGEND

- TERRAZO DIVIDER STRIP
- TERRAZO FIELD COLOR
- TERRAZO ACCENT COLOR 1
- TERRAZO ACCENT COLOR 2
- CONCRETE
- LINOLEUM RESILIENT FLOORING
- CARPET TILES OVER RAISED FLOORING SYSTEM
- RECESSED WALK OFF MATS
- CERAMIC TILE
- CARPET TILE

GENERAL NOTES

1. FOR FINISH SCHEDULE SEE SHEET A641.
2. ALL FLOORING SHOWN ON PLAN FOR REFERENCE ONLY, SEE FINISH SCHEDULE ONLY, SEE FINISH SCHEDULE FOR EXACT PRODUCT.
3. TERRAZZO FLOORING SHALL HAVE 4 DIFFERENNT COLOR PATTERNS REPRESENTED IN THE 3 DIFFERENT SHADES SHOWN ON THE FINISH PLAN.
4. ALL FINISH FLOOR AND GROUND SURFACES SHALL BE STABLE, FIRM AND SLIP RESISTANT.

KEYNOTES

1. ACCESS FLOORING PANEL GRID, LOCATION SEE DETAILS .
2. STEEL SUPPORT PEDESTAL W/BOLTED STRINGER SYSTEM, TYP. @ ALL INTERSECTIONS.
3. STEEL PERIMETER SUPPORT PEDESTAL W/BOLTED STRINGER, TYP. @ ALL PERIMETER INTERSECTIONS.
4. ACCESS FLOOR RAMP SEE 3/A520

1 FINISH FLOOR PLAN — 1/8" = 1'-0"

IDENTIFICATION STAMP
DIV. OF THE STATE ARCHITECT
APP: 03-121324 INC:
REVIEWED FOR
SS ☐ FLS ☐ ACS ☑
DATE: 09/14/2022

OFFICE OF THE STATE FIRE MARSHAL
APPROVED FIRE AND PANIC ONLY
09/07/22
21-0233
Approval of this plan does not authorize or approve any omission or deviation from applicable regulations. Final approval is subject to field inspection. One set of approved plans shall be available on the project site at all times.

DGS GENERAL SERVICES
Department of General Services
Architecture & Engineering Sections
State of California
Real Estate Services Division
Project Management & Development Branch
707 Third Street, Suite 4-105
West Sacramento, California 95605

LICENSED ARCHITECT
JEREMY K. KHOO
C-35651
REN. 05/31/23
STATE OF CALIFORNIA

DMV
State of California
Department of Motor Vehicles

Issue

No.	Date	Description
1	9/2/22	

Project
SANTA MARIA FIELD OFFICE REPLACEMENT
2770 SANTA MARIA WAY
SANTA MARIA, CA 93455
SANTA MARIA COUNTY

DEPT OF MOTOR VEHICLES

Supervisor	Designed	Drawn
MG	GP	JK

DSA App No.	SFM Permit No.
03-121324	21-S-0233-CP-ER

Sheet Title
FLOOR FINISH PLAN

Project Number
DGS000000140725

Reference North | Sheet Scale

Sheet Number
A112

Copyright © 2020, California Department of General Services - Real Estate Services Division

C:\Projects\000000000000140725_ARC_Project Master_22_Jeremy Khoo58F893.rvt
7/12/2022 11:58:17 AM

RELATIVE BORDER SCALE IN INCHES

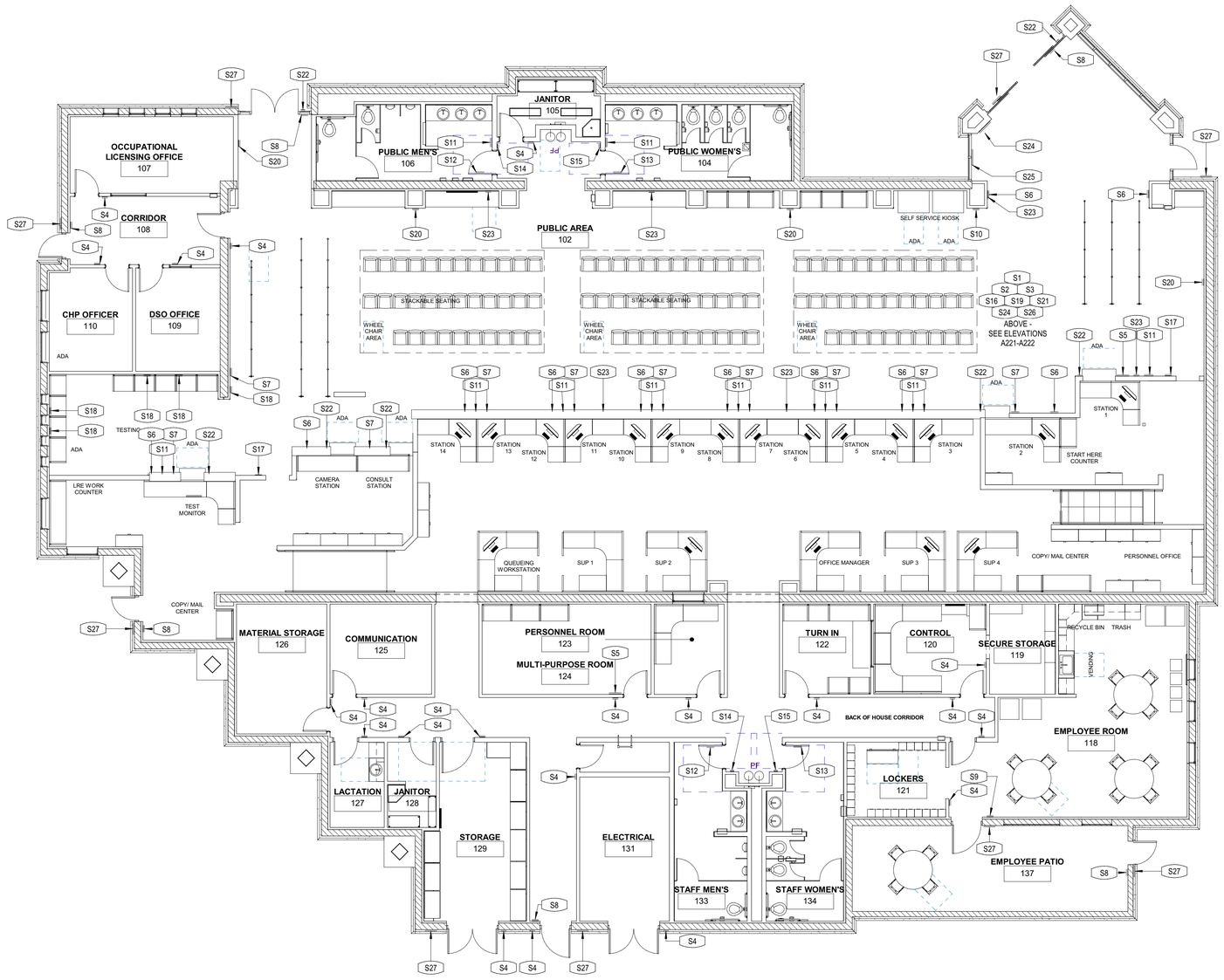

1 SIGNAGE PLAN

1/8" = 1'-0"

SIGNAGE PLAN - SIGN SCHEDULE

SIGN ID	TYPE	TACTILE TEXT MESSAGE	BRAILLE TRANSCRIPTION	VISUAL TEXT MESSAGE	GEOMETRIC SHAPE	SIGNAGE PICTOGRAM	DETAIL	COMMENTS
S1	START HERE					No	17/A508	
S2	CAMERA / CONSULTING					No	17/A508	
S3	STATION NUMBER			<varies>		No	12/A508	
S5	ASSISTIVE LISTENING					No	8/A503	
S6	FOR SERVICE					No	10/A508	
S7	CURRENCY ACCEPTED					No	9/A508	
S8	EXIT	EXIT	exit			No	4/A503	
S9	EXIT ROUTE	EXIT ROUTE	exit route			No	4/A503	
S10	OCCUPANCY LOAD			MAXIMUM OCCUPANT LOAD		No	5/A508	
S11	UNATTENDED CHILDREN			DO NOT LEAVE CHILD UNATTENDED		No	7/A508	
S12	GEOMETRIC RESTROOM				EQUILATERAL TRIANGLE	No	3/A503	
S13	GEOMETRIC RESTROOM				CIRCLE	No	3/A503	
S14	RESTROOM	MEN	men			Yes	2/A503	
S15	RESTROOM	WOMEN	women			Yes	2/A503	
S16	EYE CHART					No	3/A508, 4/A508	
S17	AUTHORIZED PERSONNEL					No	8/A508	
S18	NO VISITING					No	6/A508	TWO SIGNS TO BE IN SPANISH, TWO SIGNS TO BE IN ENGLISH
S19	EXAMINATION AREA					No	3/A508, 16/A508	
S20	NO FOOD					No	2/A508	
S21	DOOR TO REMAIN UNLOCKED					No	11/A508	
S22	ACCESSIBLE SYMBOL					Yes	1/A503	
S23	NOTICE OF THREAT					No	13/A508	
S24	CCTV					No	14/A508	
S25	FOR APPOINTMENTS					No	15/A508	
S26	CONSULT					No	16/A508	
S27	NO SMOKING					No	8/A511	

SIGN SCHEDULE - ROOM IDENTIFICATION

SIGN ID	TYPE	TACTILE TEXT MESSAGE	BRAILLE TRANSCRIPTION	VISUAL TEXT MESSAGE	GEOMETRIC SHAPE	SIGNAGE PICTOGRAM	DETAIL	COMMENTS
S4	ROOM IDENTIFICATION	CHP OFFICER	chp officer	CHP OFFICER		No	4/A503	COORDINATE SPECIFIC ROOM NAMES AND NUMBERS WITH THE STATE
S4	ROOM IDENTIFICATION	COMMUNICATION	communication	COMMUNICATION		No	4/A503	COORDINATE SPECIFIC ROOM NAMES AND NUMBERS WITH THE STATE
S4	ROOM IDENTIFICATION	CONTROL	control	CONTROL		No	4/A503	COORDINATE SPECIFIC ROOM NAMES AND NUMBERS WITH THE STATE
S4	ROOM IDENTIFICATION	CORRIDOR	corridor	CORRIDOR		No	4/A503	COORDINATE SPECIFIC ROOM NAMES AND NUMBERS WITH THE STATE
S4	ROOM IDENTIFICATION	DSO OFFICE	dso office	DSO OFFICE		No	4/A503	COORDINATE SPECIFIC ROOM NAMES AND NUMBERS WITH THE STATE
S4	ROOM IDENTIFICATION	ELECTRICAL	electrical	ELECTRICAL		No	4/A503	COORDINATE SPECIFIC ROOM NAMES AND NUMBERS WITH THE STATE
S4	ROOM IDENTIFICATION	EMPLOYEE ROOM	employee room	EMPLOYEE ROOM		No	4/A503	COORDINATE SPECIFIC ROOM NAMES AND NUMBERS WITH THE STATE
S4	ROOM IDENTIFICATION	JANITOR	janitor	JANITOR		No	4/A503	COORDINATE SPECIFIC ROOM NAMES AND NUMBERS WITH THE STATE
S4	ROOM IDENTIFICATION	LACTATION	lactation	LACTATION		No	4/A503	COORDINATE SPECIFIC ROOM NAMES AND NUMBERS WITH THE STATE
S4	ROOM IDENTIFICATION	LOCKERS	lockers	LOCKERS		No	4/A503	COORDINATE SPECIFIC ROOM NAMES AND NUMBERS WITH THE STATE
S4	ROOM IDENTIFICATION	MATERIAL STORAGE	material storage	MATERIAL STORAGE		No	4/A503	COORDINATE SPECIFIC ROOM NAMES AND NUMBERS WITH THE STATE
S4	ROOM IDENTIFICATION	MULTI PURPOSE ROOM	multi purpose room	MULTI-PURPOSE ROOM		No	4/A503	COORDINATE SPECIFIC ROOM NAMES AND NUMBERS WITH THE STATE
S4	ROOM IDENTIFICATION	OCCUPATIONAL LICENSING	occupational licensing	OCCUPATIONAL LICENSING		No	4/A503	
S4	ROOM IDENTIFICATION	PERSONNEL ROOM	personnel room	PERSONNEL ROOM		No	4/A503	COORDINATE SPECIFIC ROOM NAMES AND NUMBERS WITH THE STATE
S4	ROOM IDENTIFICATION	ROOF ACCESS	roof access	ROOF ACCESS		No	4/A503	COORDINATE SPECIFIC ROOM NAMES AND NUMBERS WITH THE STATE
S4	ROOM IDENTIFICATION	SECURE STORAGE	secure storage	SECURE STORAGE		No	4/A503	COORDINATE SPECIFIC ROOM NAMES AND NUMBERS WITH THE STATE
S4	ROOM IDENTIFICATION	STAFF ENTRY	staff entry	STAFF ENTRY		No	4/A503	COORDINATE SPECIFIC ROOM NAMES AND NUMBERS WITH THE STATE
S4	ROOM IDENTIFICATION	STORAGE	storage	STORAGE		No	4/A503	COORDINATE SPECIFIC ROOM NAMES AND NUMBERS WITH THE STATE
S4	ROOM IDENTIFICATION	TURN IN	turn in	TURN IN		No	4/A503	COORDINATE SPECIFIC ROOM NAMES AND NUMBERS WITH THE STATE

IDENTIFICATION STAMP
DIV. OF THE STATE ARCHITECT
APP: 03-121324 INC:
REVIEWED FOR
SS ☐ FLS ☐ ACS ☑
DATE: 09/14/2022

OFFICE OF THE STATE FIRE MARSHAL
APPROVED FIRE AND PANIC ONLY
09/07/22
21-0233
Approval of this plan does not authorize or approve any omission or deviation from applicable regulations. Final approval is subject to field inspection. One set of approved plans shall be available on the project site at all times.

DGS GENERAL SERVICES
Department of General Services
Architecture & Engineering Sections
State of California
Real Estate Services Division
Project Management & Development Branch
707 Third Street, Suite 4-105
West Sacramento, California 95605

LICENSED ARCHITECT
JEREMY K. KHOO
C-35651
REN. 05/31/23
STATE OF CALIFORNIA

DMV
State of California
Department of Motor Vehicles

Issue

No.	Date	Description
1	9/2/22	

Project
SANTA MARIA FIELD OFFICE REPLACEMENT
2770 SANTA MARIA WAY
SANTA MARIA, CA 93455
SANTA MARIA COUNTY

DEPT OF MOTOR VEHICLES

Supervisor	Designed	Drawn
MG	GP	JK

DSA App No. 03-121324
SFM Permit No. 21-S-0233-CP-ER

Sheet Title
SIGNAGE PLAN

Project Number
DGS000000140725

Reference North
Sheet Scale
Sheet Number
A113

Copyright © 2020, California Department of General Services - Real Estate Services Division

C:\Projects\000000000140725_ARC_Project Master_22_Jeremy.Khoo59F93.rvt
7/12/2022 11:58:25 AM
RELATIVE BORDER SCALE IN INCHES

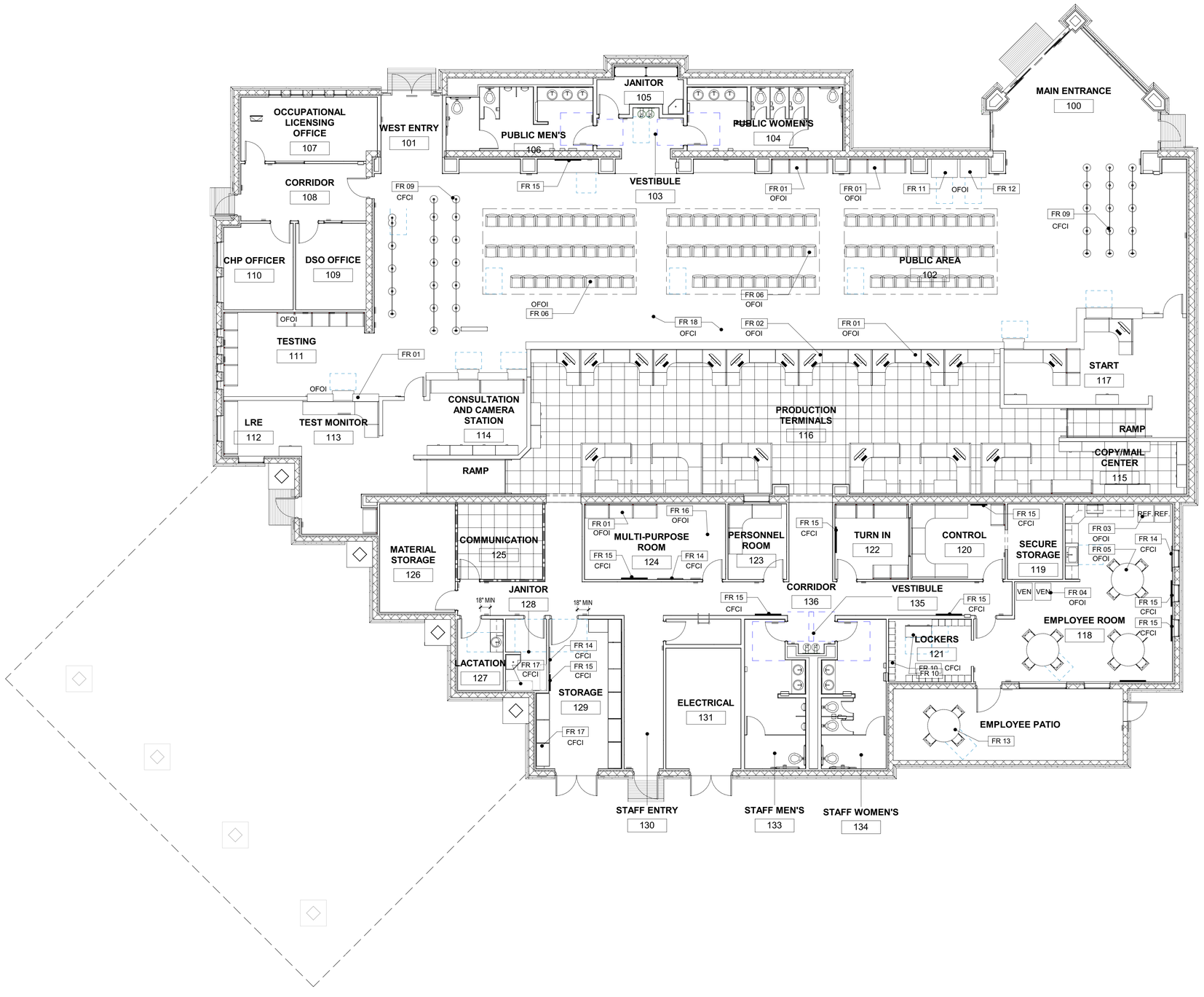

Keynote Legend	
Key Value	Keynote Text
FR 01	OWNER PROVIDED MODULAR SYSTEMS FURNITURE
FR 02	OWNER PROVIDED COMPUTERS
FR 03	OWNER PROVIDED REFRIGERATOR
FR 04	OWNER PROVIDED VENDING MACHINE
FR 05	OWNER PROVIDED LUNCH TABLES AND CHAIRS
FR 06	LOBBY CHAIRS (102 TOTAL, 6 WHEELCHAIR SPACES)
FR 09	STANCHION (ROPE & POST SYSTEM)
FR 10	48" MIN x 20" MIN ACCESSIBLE BENCH WITH BACK
FR 11	QUEUE KIOSK
FR 12	SELF SERVICE TERMINAL (SST)
FR 13	OUTDOOR EMPLOYEE PATIO FURNITURE
FR 14	WHITEBOARD
FR 15	TACKBOARD
FR 16	TABLE & CHAIRS
FR 17	METAL SHELVING UNIT
FR 18	TELEVISIONS SHOWN ON A222

OFOI OWNER FURNISHED / OWNER INSTALLED
OFCI OWNER FURNISHED / CONTRACTOR INSTALLED
CFCI CONTRACTOR FURNISHED / CONTRACTOR INSTALLED

1 FURNITURE PLAN

1/8" = 1'-0"

IDENTIFICATION STAMP
DIV. OF THE STATE ARCHITECT
APP: 03-121324 INC:
REVIEWED FOR
SS ☐ FLS ☐ ACS ☑
DATE: 09/14/2022

OFFICE OF THE STATE FIRE MARSHAL
APPROVED FIRE AND PANIC ONLY
09/07/22
21-0233
Approval of this plan does not authorize or approve any omission or deviation from applicable regulations. Final approval is subject to field inspection. One set of approved plans shall be available on the project site at all times.

DGS GENERAL SERVICES
Department of General Services
Architecture & Engineering Sections
State of California
Real Estate Services Division
Project Management & Development Branch
707 Third Street, Suite 4-105
West Sacramento, California 95605

LICENSED ARCHITECT
JEREMY K. KHOO
C-35651
REN. 05/31/23
STATE OF CALIFORNIA

DMV
State of California
Department of Motor Vehicles

Issue

No.	Date	Description
1	9/2/22	

Project
SANTA MARIA FIELD OFFICE REPLACEMENT
2770 SANTA MARIA WAY
SANTA MARIA, CA 93455
SANTA MARIA COUNTY

DEPT OF MOTOR VEHICLES

Supervisor	Designed	Drawn
M.G.	GP	JK

DSA App No.	SFM Permit No.
03-121324	21-S-0233-CP-ER

Sheet Title
FURNITURE PLAN

Project Number
DGS000000140725

Sheet Scale

Sheet Number
A114

Copyright © 2020, California Department of General Services- Real Estate Services Division

7/12/2022 11:58:33 AM C:\Projects\000000000140725_ARC_Project Master_22_Jeremy.Khoo58F93.rvt

RELATIVE BORDER SCALE IN INCHES

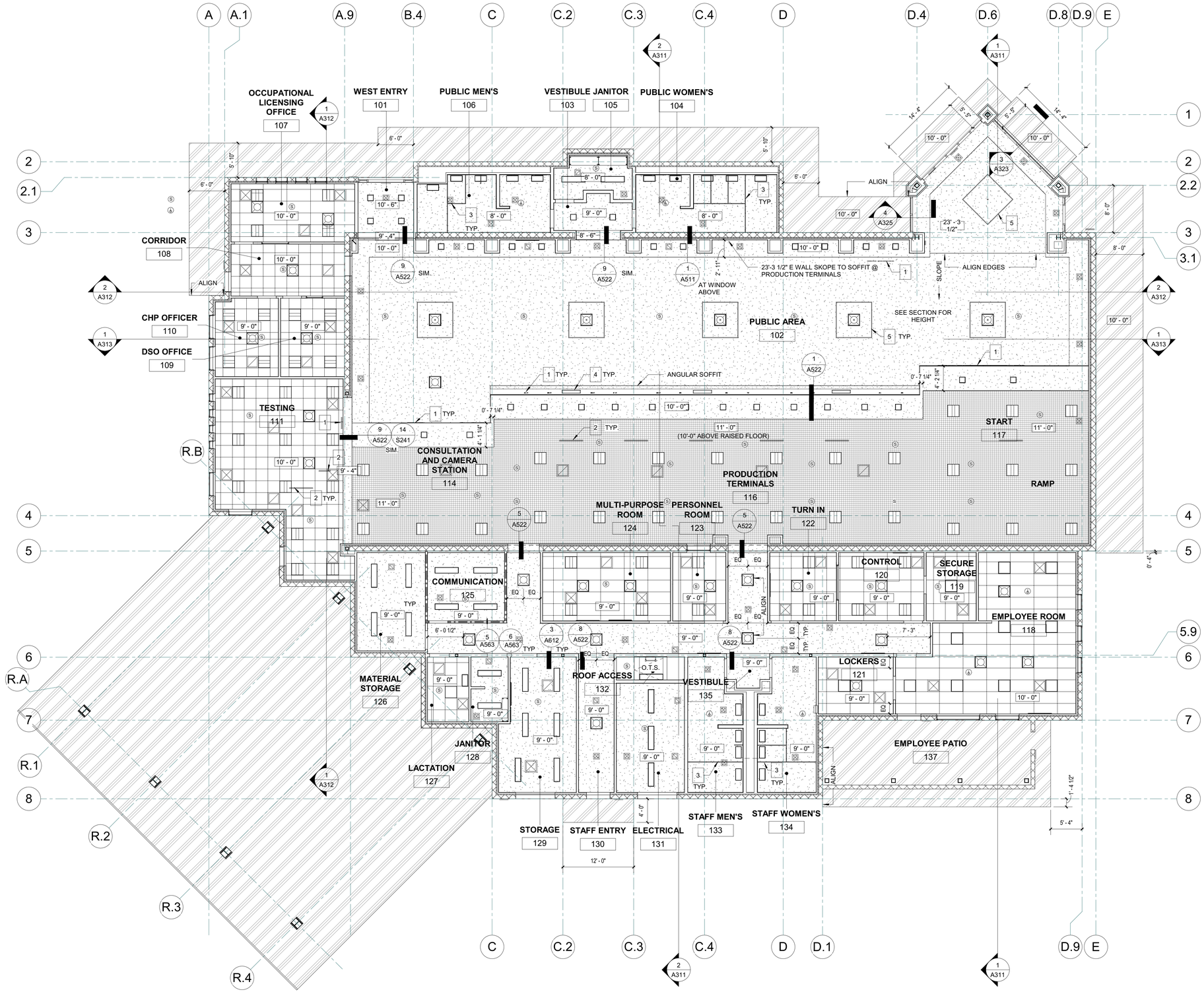

LEGEND

- LARGE PENDANT LIGHT
- SOLAR TUBE
- 2'x2' LIGHT
- 1'x4' LIGHT
- METAL PANEL
- GYP. CEILING
- EGGCRATE PANEL CEILING TILE
- 2'x2' CEILING TILE
- 2'x2' CEILING TILE
- CEILING ACCESS PANEL
- 4" SQ. DOWNLIGHT
- CEILING MOUNTED FIRE ALARM SMOKE DETECTOR
- CEILING MOUNTED FIRE ALARM HEAT DETECTOR

GENERAL NOTES

1. REFER TO FINISH SCHEDULE FOR ADDITIONAL FINISH INFO.
2. ALL CLG GRIDS ARE CENTERED IN ROOMS.
3. SEE ELECTRICAL LIGHTING PLAN FOR LIGHTING DESIGNATIONS.

KEYNOTES

1. STATION NUMBER MOUNTING PER DETAIL 1/A508 SIM.
2. EYE CHART SIGNAGE MOUNTING PER DETAIL 3/A508.
3. CEILING HUNG PARTITION SEE DETAIL 14/A502.
4. TV MONITOR MOUNTING ON WALL/ANGULAR SOFFIT SEE DETAIL 8/S582 & 1/A522.
5. LARGE PENDANT LIGHT SEE ELECT.

1 REFLECTED CEILING PLAN

1/8" = 1'-0"

IDENTIFICATION STAMP
DIV. OF THE STATE ARCHITECT
APP: 03-121324 INC:
REVIEWED FOR
SS ☐ FLS ☐ ACS ☑
DATE: 09/14/2022

OFFICE OF THE STATE FIRE MARSHAL
APPROVED FIRE AND PANIC ONLY
09/07/22
21-0233
Approval of this plan does not authorize or approve any omission or deviation from applicable regulations. Final approval is subject to field inspection. One set of approved plans shall be available on the project site at all times.

DGS GENERAL SERVICES
Department of General Services
Architecture & Engineering Sections
State of California
Real Estate Services Division
Project Management & Development Branch
707 Third Street, Suite 4-105
West Sacramento, California 95605

LICENSED ARCHITECT
JEREMY K. KHOO
C-35853
REN: 05/31/23
STATE OF CALIFORNIA

DMV
State of California
Department of Motor Vehicles

Issue		
No.	Date	Description
1	9/2/22	

Project
SANTA MARIA FIELD OFFICE REPLACEMENT
2770 SANTA MARIA WAY
SANTA MARIA, CA 93455
SANTA MARIA COUNTY
DEPT OF MOTOR VEHICLES

Supervisor	Designed	Drawn
MG	GP	JK

DSA App No.	SFM Permit No.
03-121324	21-S-0233-CP-ER

Sheet Title
REFLECTED CEILING PLAN

Project Number
DGS000000140725

Sheet Scale

Sheet Number
A121

Copyright © 2020, California Department of General Services- Real Estate Services Division

9/2/2022 12:22:38 PM C:\Projects\000000000140725_ARC_Project Master_22_Jeremy.Khoo58F93.rvt

RELATIVE BORDER SCALE IN INCHES

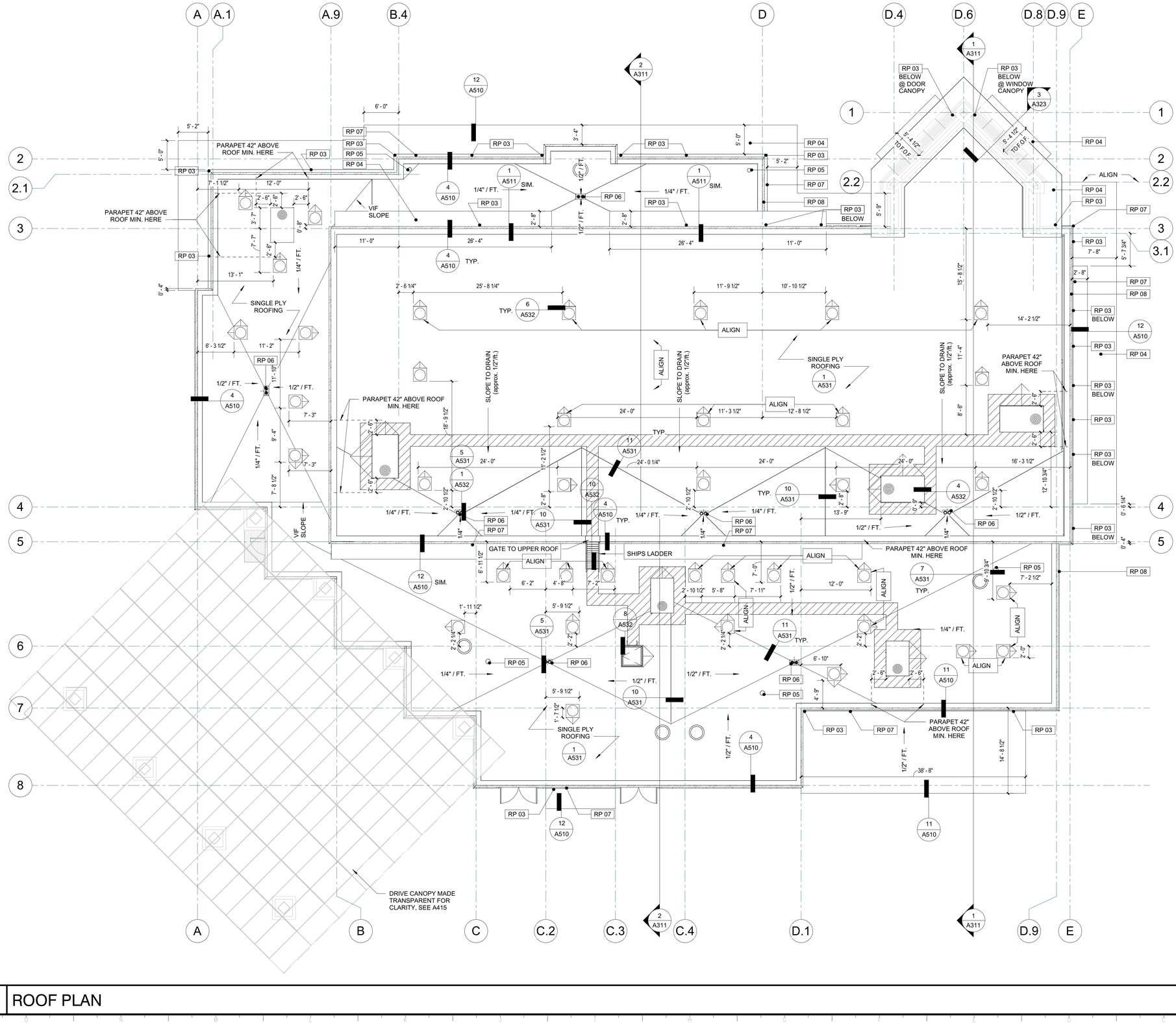

LEGEND

- AC ROOFTOP UNIT
- SKYLIGHT - 21" LIGHTDOME W/ CURB
- OVER FLOW DRAIN, SEE DETAIL 1 / A532
- ROOF HATCH, SEE DETAIL 8 / A532
- SHIPS LADDER, SEE DETAIL 10 / A532
- 2' WIDE WALK PAD, DETAIL @ 4/A531
- CRICKETS
- EXHAUST FAN

Keynote Legend	
Key Value	Keynote Text
RP 03	RAIN WATER LEADER (SEE ELEVATIONS)
RP 04	METAL PANEL CANOPY
RP 05	VENT THROUGH ROOF, SEE DETAIL 7/A531
RP 06	OVER FLOW DRAIN SEE DETAIL 4/P521
RP 07	GUTTER
RP 08	CORNICE

1 ROOF PLAN — 1/8" = 1'-0"

IDENTIFICATION STAMP
DIV. OF THE STATE ARCHITECT
APP: 03-121324 INC:
REVIEWED FOR
SS ☐ FLS ☐ ACS ☑
DATE: 09/14/2022

OFFICE OF THE STATE FIRE MARSHAL
APPROVED FIRE AND PANIC ONLY
09/07/22
21-0233
Approval of this plan does not authorize or approve any omission or deviation from applicable regulations. Final approval is subject to field inspection. One set of approved plans shall be available on the project site at all times.

DGS GENERAL SERVICES
Department of General Services
Architecture & Engineering Sections
State of California
Real Estate Services Division
Project Management & Development Branch
707 Third Street, Suite 4-105
West Sacramento, California 95605

LICENSED ARCHITECT
JEREMY K. KHOO
C-35651
REN. 05/31/23
STATE OF CALIFORNIA

DMV
State of California
Department of Motor Vehicles

Issue		
No.	Date	Description
1	9/2/22	

Project
SANTA MARIA FIELD OFFICE REPLACEMENT
2770 SANTA MARIA WAY
SANTA MARIA, CA 93455
SANTA MARIA COUNTY

DEPT OF MOTOR VEHICLES

Supervisor	Designed	Drawn
M.G.	GP	JK

DSA App No.	SFM Permit No.
03-121324	21-S-0233-CP-ER

Sheet Title
ROOF PLAN

Project Number
DGS000000140725

Sheet Scale

Sheet Number
A131

Copyright © 2020, California Department of General Services, Real Estate Services Division

C:\Projects\000000000140725_ARC_Project Master_22_Jeremy.Khoo58F93.rvt
9/2/2022 1:25:32 PM

RELATIVE BORDER SCALE IN INCHES

Keynote Legend	
Key Value	Keynote Text
EL 01	PAINTED 16" METAL TRIM CORNICE
EL 02	CMU A - FIELD
EL 03	CMU B - ACCENT SEE DETAIL 9/A212
EL 04	PRECAST CONCRETE PANEL WAINSCOT
EL 06	STOREFRONT WINDOW SYSTEM
EL 07	INSULATED SPANDREL PANEL
EL 08	WINDOW PANEL
EL 09	STOREFRONT DOOR
EL 10	INTEGRATED LOUVERED SHADE OF WINDOW SYSTEM
EL 12	EXPANSION JOINT
EL 13	16" DEEP AWNING, METAL PANELS, SLOPED
EL 17	16" DEEP FORMED METAL PANEL
EL 18	CANOPY BEYOND
EL 20	RAIN WATER LEADER
EL 21	8x12x24 BENT SHEET METAL BLOCK
EL 22	METAL PANEL SYSTEM SEE SHEET A507
EL 24	CUSTOM 4' ANODIZED ALUMINUM LETTERING PER IN SPECS, SEE 2/A511
EL 25	METAL PANEL JOINT

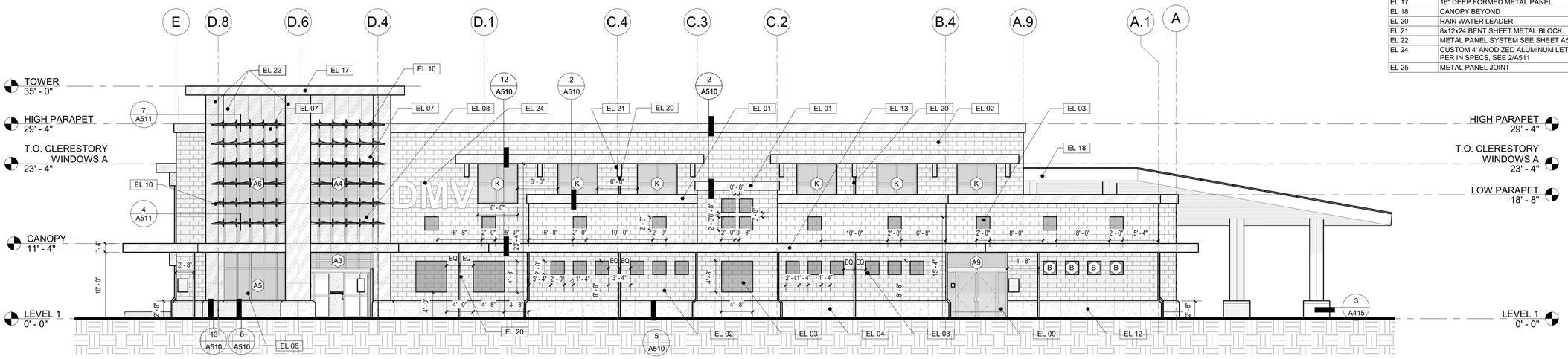

1 NORTH ELEVATION

1/8" = 1'-0"

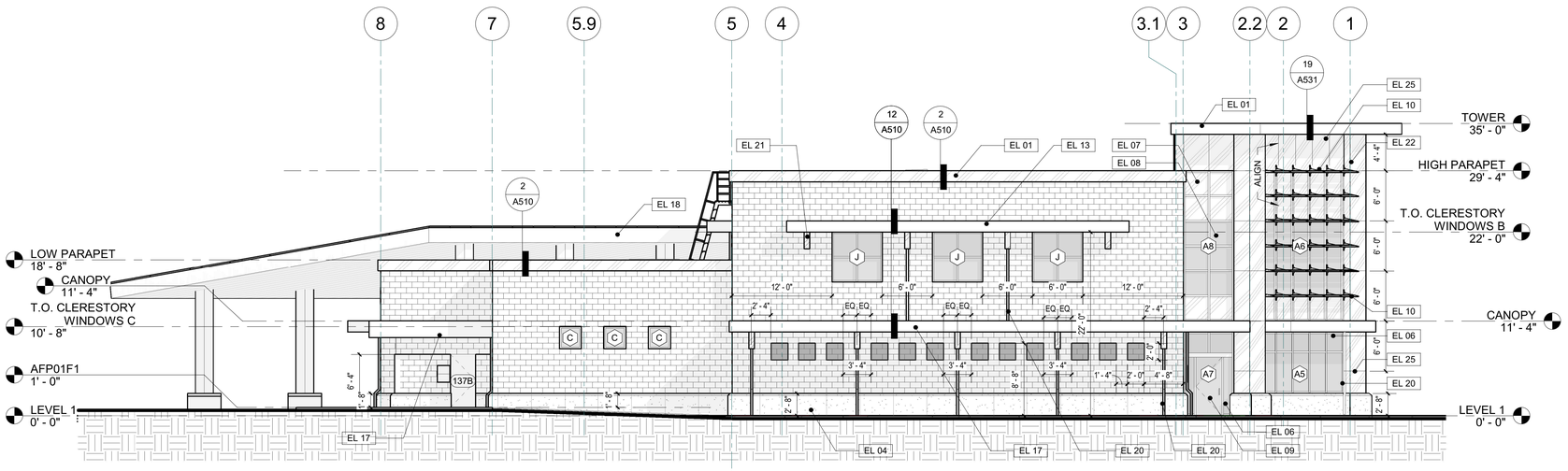

2 EAST ELEVATION

1/8" = 1'-0"

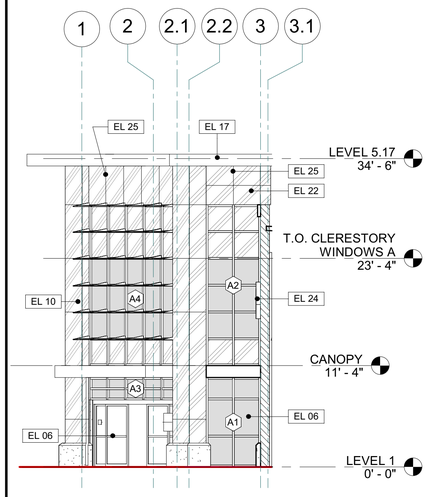

3 PRTL WEST ELEVATION

1/8" = 1'-0"

IDENTIFICATION STAMP
DIV. OF THE STATE ARCHITECT
APP: 03-121324 INC:
REVIEWED FOR
SS ☐ FLS ☐ ACS ☑
DATE: 09/14/2022

OFFICE OF THE STATE FIRE MARSHAL
APPROVED FIRE AND PANIC ONLY
09/07/22
21-0233
Approval of this plan does not authorize or approve any omission or deviation from applicable regulations. Final approval is subject to field inspection. One set of approved plans shall be available on the project site at all times.

GENERAL SERVICES
Department of General Services
Architecture & Engineering Sections
State of California
Real Estate Services Division
Project Management & Development Branch
707 Third Street, Suite 4-105
West Sacramento, California 95605

LICENSED ARCHITECT
JEREMY K. KHOO
C-35651
REN. 05/31/23
STATE OF CALIFORNIA

DMV
State of California
Department of Motor Vehicles

Issue		
No.	Date	Description
1	9/2/22	

Project
SANTA MARIA FIELD OFFICE REPLACEMENT
2770 SANTA MARIA WAY
SANTA MARIA, CA 93455
SANTA MARIA COUNTY

DEPT OF MOTOR VEHICLES

Supervisor	Designed	Drawn
MG	GP	JK

DSA App No.	SFM Permit No.
03-121324	21-S-0233-CP-ER

Sheet Title
NORTH AND EAST ELEVATIONS

Project Number
DGS000000140725

Sheet Scale

Sheet Number
A211

Copyright © 2020, California Department of General Services- Real Estate Services Division

C:\Projects\0000000000140725_ARC_Project Master_22_Jeremy.Khoo58F93.rvt
7/12/2022 11:58:57 AM

RELATIVE BORDER SCALE IN INCHES

Keynote Legend	
Key Value	Keynote Text
EL 01	PAINTED 16" METAL TRIM CORNICE
EL 02	CMU A - FIELD
EL 03	CMU B - ACCENT SEE DETAIL 9/A212
EL 05	SHIPS LADDER TO HIGH ROOF WITH GATE
EL 10	INTEGRATED LOUVERED SHADE OF WINDOW SYSTEM
EL 12	EXPANSION JOINT
EL 13	16" DEEP AWNING, METAL PANELS, SLOPED
EL 14	STEP OF GRADE CHANGE
EL 15	WROUGHT IRON BARS AT WALL
EL 17	16" DEEP FORMED METAL PANEL
EL 19	CANOPY ROOF AND COLUMNS SHOWN AS TRANSPARENT FOR CLARITY
EL 20	RAIN WATER LEADER
EL 22	METAL PANEL SYSTEM SEE SHEET A507

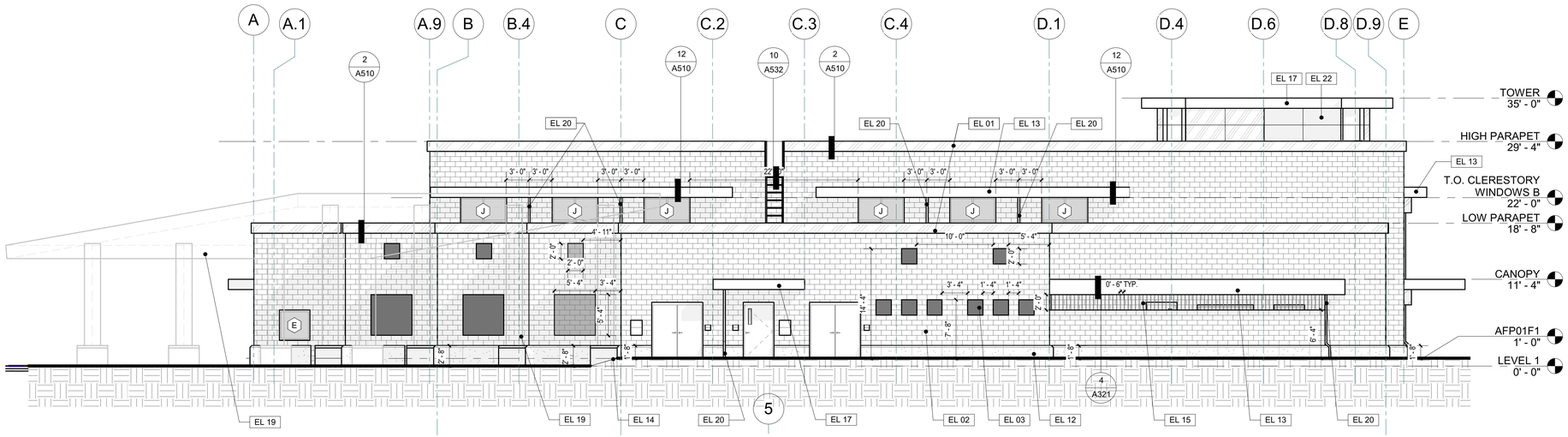

1 SOUTH ELEVATION — 1/8" = 1'-0"

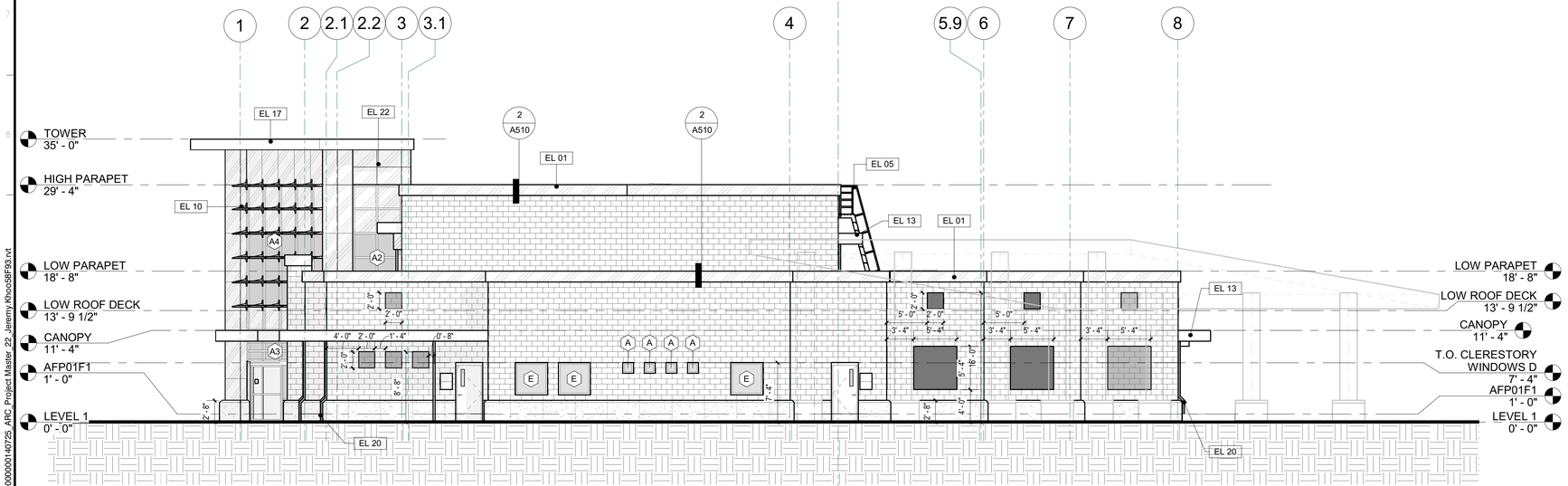

2 WEST ELEVATION — 1/8" = 1'-0"

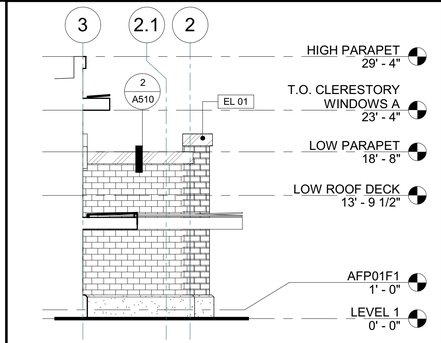

3 PRTL EAST ELEVATION — 1/8" = 1'-0"

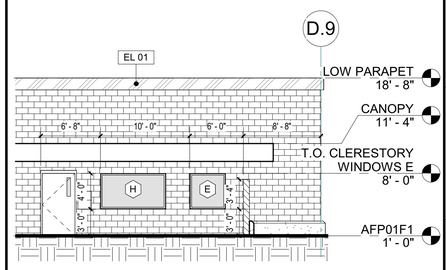

4 PRTL SOUTH ELEVATION — 1/8" = 1'-0"

IDENTIFICATION STAMP
DIV. OF THE STATE ARCHITECT
APP: 03-121324 INC:
REVIEWED FOR
SS ☐ FLS ☐ ACS ☑
DATE: 09/14/2022

OFFICE OF THE STATE FIRE MARSHAL
APPROVED FIRE AND PANIC ONLY
09/07/22
21-0233
Approval of this plan does not authorize or approve any omission or deviation from applicable regulations. Final approval is subject to field inspection. One set of approved plans shall be available on the project site at all times.

DGS GENERAL SERVICES
Department of General Services
Architecture & Engineering Sections
State of California
Real Estate Services Division
Project Management & Development Branch
707 Third Street, Suite 4-105
West Sacramento, California 95605

LICENSED ARCHITECT
JEREMY K. KHOO
C-35651
REN. 05/31/23
STATE OF CALIFORNIA

DMV
State of California
Department of Motor Vehicles

Issue

No.	Date	Description
1	9/2/22	

Project
SANTA MARIA FIELD OFFICE REPLACEMENT
2770 SANTA MARIA WAY
SANTA MARIA, CA 93455
SANTA MARIA COUNTY

DEPT OF MOTOR VEHICLES

Supervisor	Designed	Drawn
MG	GP	JK

DSA App No.	SFM Permit No.
03-121324	21-S-0233-CP-ER

Sheet Title
SOUTH AND WEST ELEVATIONS

Project Number
DGS000000140725

Sheet Scale

Sheet Number
A212

C:\Projects\000000000000140725_ARC_Project Master_22_Jeremy.Khoo08F93.rvt
7/12/2022 11:59:14 AM
© Copyright © 2020, California Department of General Services - Real Estate Services Division

RELATIVE BORDER SCALE IN INCHES

SIGN SCHEDULE

SIGN ID	TYPE	TACTILE TEXT MESSAGE	BRAILLE TRANSCRIPTION	VISUAL TEXT MESSAGE	GEOMETRIC SHAPE	SIGNAGE PICTOGRAM	DETAIL	COMMENTS
S1	START HERE					No	17/A508	
S2	CAMERA / CONSULTING					No	17/A508	
S3	STATION NUMBER			<varies>		No	12/A508	
S5	ASSISTIVE LISTENING					No	8/A503	
S6	FOR SERVICE					No	10/A508	
S7	CURRENCY ACCEPTED					No	9/A508	
S8	EXIT	EXIT	exit			No	4/A503	
S9	EXIT ROUTE	EXIT ROUTE	exit route			No	4/A503	
S10	OCCUPANCY LOAD			MAXIMUM OCCUPANT LOAD		No	5/A508	
S11	UNATTENDED CHILDREN			DO NOT LEAVE CHILD UNATTENDED		No	7/A508	
S12	GEOMETRIC RESTROOM				EQUILATERAL TRIANGLE	No	3/A503	
S13	GEOMETRIC RESTROOM				CIRCLE	No	3/A503	
S14	RESTROOM	MEN	men			Yes	2/A503	

SIGN SCHEDULE

SIGN ID	TYPE	TACTILE TEXT MESSAGE	BRAILLE TRANSCRIPTION	VISUAL TEXT MESSAGE	GEOMETRIC SHAPE	SIGNAGE PICTOGRAM	DETAIL	COMMENTS
S15	RESTROOM	WOMEN	women			Yes	2/A503	
S16	EYE CHART					No	3/A508, 4/A508	
S17	AUTHORIZED PERSONNEL					No	8/A508	
S18	NO VISITING					No	6/A508	TWO SIGNS TO BE IN SPANISH, TWO SIGNS TO BE IN ENGLISH
S19	EXAMINATION AREA					No	3/A508, 16/A508	
S20	NO FOOD					No	2/A508	
S21	DOOR TO REMAIN UNLOCKED					No	11/A508	
S22	ACCESSIBLE SYMBOL					Yes	1/A503	
S23	NOTICE OF THREAT					No	13/A508	
S24	CCTV					No	14/A508	
S25	FOR APPOINTMENTS					No	15/A508	
S26	CONSULT					No	16/A508	
S27	NO SMOKING					No	8/A511	

Keynote Legend	
Key Value	Keynote Text
FP 16	FIRE EXTINGUISHER, SEE 10/A612 FOR RECESS
FP 17	AUTOMATED EXTERNAL DEFIBRILLATOR, SEE 10/A612 FOR RECESS
SC 11	DUST CAP SLOPE@SOFFIT
SC 13	LARGE PENDANT LIGHT
SC 22	SUSPENDED EGG CRATE CEILING
SC 23	SUSPENDED GYP BOARD CEILING
SC 24	ACCESSIBLE FLOOR SYSTEM
SC 27	PAMPHLET LOCATION
SC 28	TACK BOARD
SC 29	METAL PANEL SYSTEM SEE SHEET A507
SC 32	CORNER GUARD
SC 34	LAMINATE WAINSCOT PER FINISH SCHEDULE
SC 35	GYPSUM BOARD WALLS

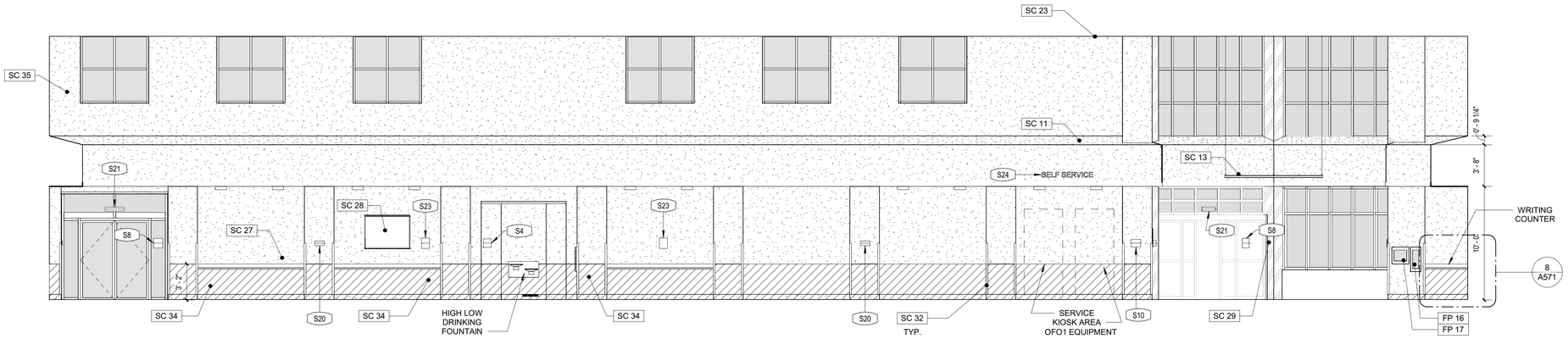

1 PUBLIC AREA 102 - PARTIAL NORTH

3/16" = 1'-0"

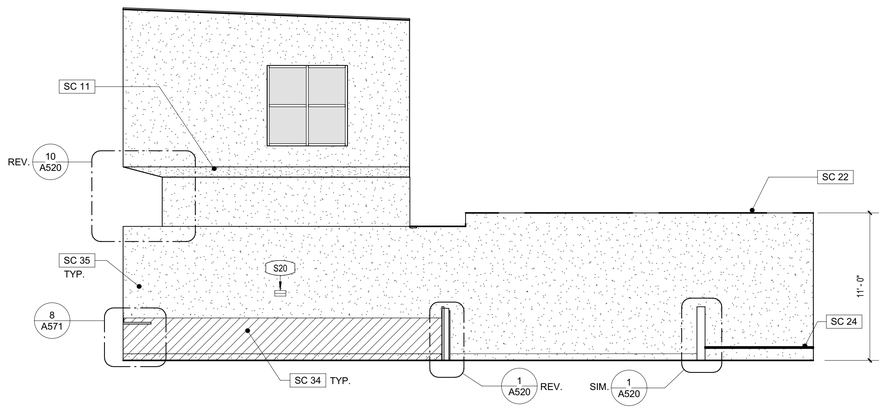

2 PUBLIC AREA 102 - EAST

3/16" = 1'-0"

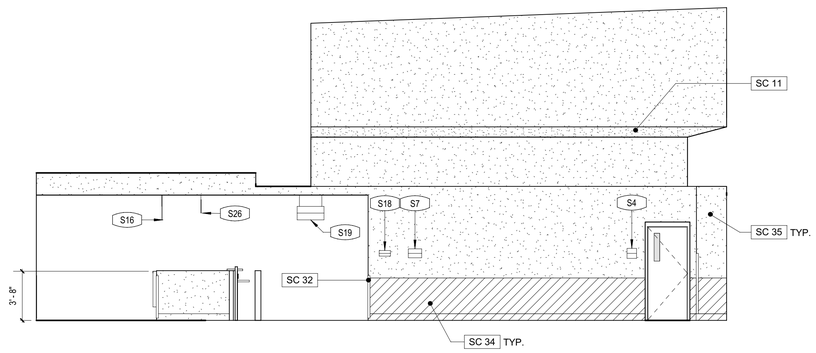

3 PUBLIC AREA 102 - PARTUAL WEST

3/16" = 1'-0"

GENERAL NOTES

1. FOR FINISH SCHEDULE SEE SHEET A641.

IDENTIFICATION STAMP
DIV. OF THE STATE ARCHITECT
APP: 03-121324 INC: A
REVIEWED FOR
SS ☐ FLS ☐ ACS ☑
DATE: 09/14/2022

OFFICE OF THE STATE FIRE MARSHAL
APPROVED FIRE AND PANIC ONLY
09/07/22
21-0233
Approval of this plan does not authorize or approve any omission or deviation from applicable regulations. Final approval is subject to field inspection. One set of approved plans shall be available on the project site at all times.

DGS GENERAL SERVICES

Department of General Services
Architecture & Engineering Sections
State of California
Real Estate Services Division
Project Management & Development Branch

707 Third Street, Suite 4-105
West Sacramento, California 95605

LICENSED ARCHITECT
JEREMY K. KHOO
C-35651
REN. 05/31/23
STATE OF CALIFORNIA

DMV
State of California
Department of Motor Vehicles

Issue

No.	Date	Description
1	9/2/22	

Project
SANTA MARIA FIELD OFFICE REPLACEMENT

2770 SANTA MARIA WAY
SANTA MARIA, CA 93455
SANTA MARIA COUNTY

DEPT OF MOTOR VEHICLES

Supervisor	Designed	Drawn
MG	GP	JK

DSA App No.	SFM Permit No.
03-121324	21-S-0233-CP-ER

Sheet Title
INTERIOR ELEVATIONS

Project Number
DGS0000000140725

Sheet Scale

Sheet Number
A221

Copyright © 2020, California Department of General Services- Real Estate Services Division

C:\Projects\0000000000140725_ARC_Project Master_22_Jeremy.Khoo58F93.rvt
7/12/2022 11:59:20 AM

RELATIVE BORDER SCALE IN INCHES

Keynote Legend	
Key Value	Keynote Text
FR 01	OWNER PROVIDED MODULAR SYSTEMS FURNITURE
SC 11	DUST CAP SLOPE@SOFFIT
SC 13	LARGE PENDANT LIGHT
SC 33	ANGULAR SOFFIT

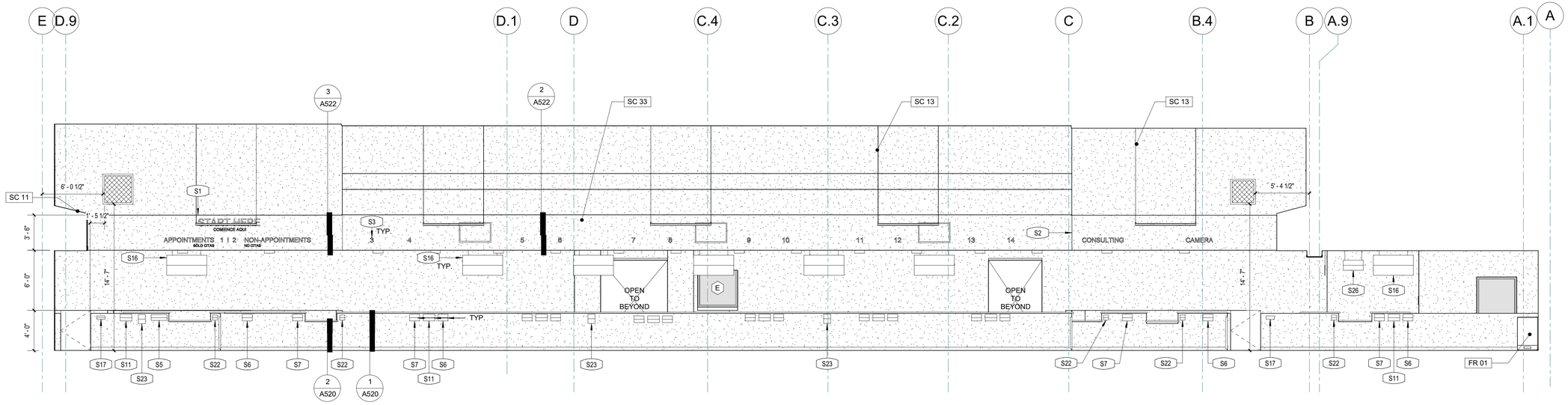

1 PUBLIC AREA 102 - SOUTH

3/16" = 1'-0"

SIGN SCHEDULE

SIGN ID	TYPE	T.ACTILE TEXT MESSAGE	BRAILLE TRANSCRIPTION	VISUAL TEXT MESSAGE	GEOMETRIC SHAPE	SIGNAGE PICTOGRAM	DETAIL	COMMENTS
S1	START HERE					No	17/A508	
S2	CAMERA / CONSULTING					No	17/A508	
S3	STATION NUMBER			<varies>		No	12/A508	
S5	ASSISTIVE LISTENING					No	8/A503	
S6	FOR SERVICE					No	10/A508	
S7	CURRENCY ACCEPTED					No	9/A508	
S8	EXIT	EXIT	exit			No	4/A503	
S9	EXIT ROUTE	EXIT ROUTE	exit route			No	4/A503	
S10	OCCUPANCY LOAD			MAXIMUM OCCUPANT LOAD		No	5/A508	
S11	UNATTENDED CHILDREN			DO NOT LEAVE CHILD UNATTENDED		No	7/A508	
S12	GEOMETRIC RESTROOM				EQUILATERAL TRIANGLE	No	3/A503	
S13	GEOMETRIC RESTROOM				CIRCLE	No	3/A503	
S14	RESTROOM	MEN	men			Yes	2/A503	

SIGN SCHEDULE

SIGN ID	TYPE	T.ACTILE TEXT MESSAGE	BRAILLE TRANSCRIPTION	VISUAL TEXT MESSAGE	GEOMETRIC SHAPE	SIGNAGE PICTOGRAM	DETAIL	COMMENTS
S15	RESTROOM	WOMEN	women			Yes	2/A503	
S16	EYE CHART					No	3/A508, 4/A508	
S17	AUTHORIZED PERSONNEL					No	8/A508	
S18	NO VISITING					No	6/A508	TWO SIGNS TO BE IN SPANISH, TWO SIGNS TO BE IN ENGLISH
S19	EXAMINATION AREA					No	3/A508, 16/A508	
S20	NO FOOD					No	2/A508	
S21	DOOR TO REMAIN UNLOCKED					No	11/A508	
S22	ACCESSIBLE SYMBOL					Yes	1/A503	
S23	NOTICE OF THREAT					No	13/A508	
S24	CCTV					No	14/A508	
S25	FOR APPOINTMENTS					No	15/A508	
S26	CONSULT					No	16/A508	
S27	NO SMOKING					No	8/A511	

GENERAL NOTES

1. FOR FINISH SCHEDULE SEE SHEET A641.

IDENTIFICATION STAMP
DIV. OF THE STATE ARCHITECT
APP: 03-121324 INC:
REVIEWED FOR
SS ☐ FLS ☐ ACS ☑
DATE: 09/14/2022

OFFICE OF THE STATE FIRE MARSHAL
APPROVED FIRE AND PANIC ONLY
09/07/22
21-0233
Approval of this plan does not authorize or approve any omission or deviation from applicable regulations. Final approval is subject to field inspection. One set of approved plans shall be available on the project site at all times.

DGS GENERAL SERVICES

Department of General Services
Architecture & Engineering Sections
State of California
Real Estate Services Division
Project Management & Development Branch
707 Third Street, Suite 4-105
West Sacramento, California 95605

LICENSED ARCHITECT
JEREMY K. KHOO
C-35651
REN. 05/31/23
STATE OF CALIFORNIA

DMV
State of California
Department of Motor Vehicles

Issue

No.	Date	Description
1	9/2/22	

Project
SANTA MARIA FIELD OFFICE REPLACEMENT

2770 SANTA MARIA WAY
SANTA MARIA, CA 93455
SANTA MARIA COUNTY

DEPT OF MOTOR VEHICLES

Supervisor	Designed	Drawn
GM	GP	JK

DSA App No.	SFM Permit No.
03-121324	21-S-0233-CP-ER

Sheet Title
INTERIOR ELEVATIONS

Project Number
DGS000000140725

Sheet Scale

Sheet Number
A222

Copyright © 2020, California Department of General Services - Real Estate Services Division

C:\Projects\000000000140725_ARC_Project Master_22_Jeremy.Khoo58F93.rvt
7/12/2022 11:59:26 AM

RELATIVE BORDER SCALE IN INCHES

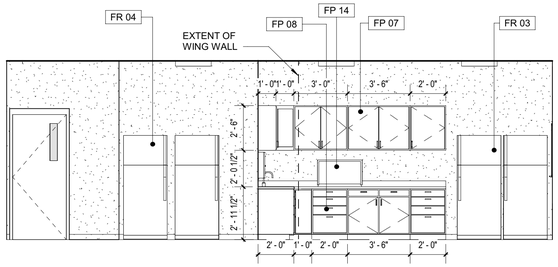

1 - NORTH

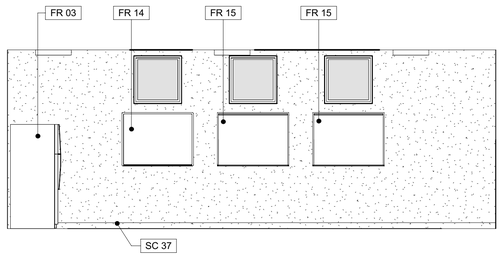

2 - EAST

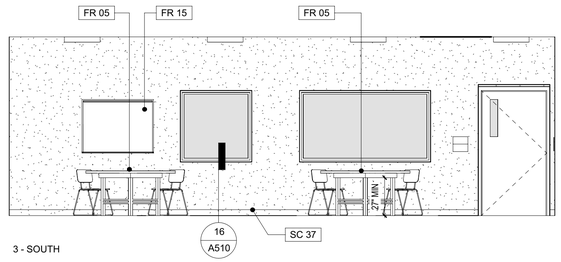

3 - SOUTH

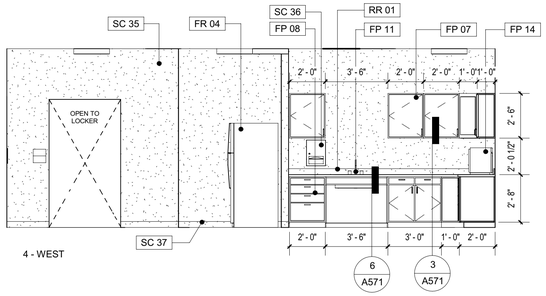

4 - WEST

Keynote Legend	
Key Value	Keynote Text
FP 05	METAL LOCKER
FP 07	UPPER CABINETS
FP 08	LOWER CABINETS
FP 11	KITCHEN SINK
FP 14	MICROWAVE OVEN
FR 03	OWNER PROVIDED REFRIGERATOR
FR 04	OWNER PROVIDED VENDING MACHINE
FR 05	OWNER PROVIDED LUNCH TABLES AND CHAIRS
FR 10	48" MIN x 20" MIN ACCESSIBLE BENCH WITH BACK
FR 14	WHITEBOARD
FR 15	TACKBOARD
RR 01	SOLID SURFACE COUNTER TOP
SC 35	GYPSUM BOARD WALLS
SC 36	PAPER TOWEL DISPENSER
SC 37	BASE PER FINISH SCHEDULE

1 EMPLOYEE ROOM 118

1/4" = 1'-0"

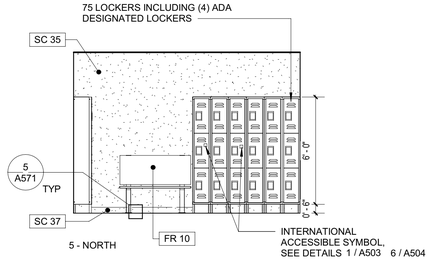

5 - NORTH

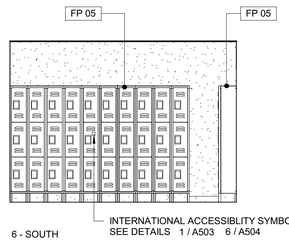

6 - SOUTH

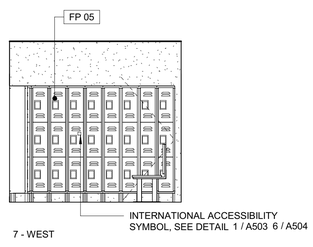

7 - WEST

5 LOCKERS 121

1/4" = 1'-0"

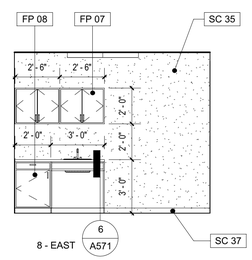

8 - EAST

8 LACTATION 127

1/4" = 1'-0"

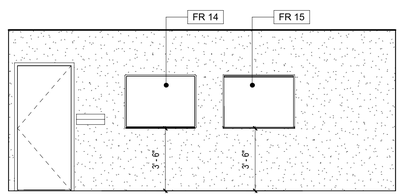

9 MULTI-PURPOSE 124

1/4" = 1'-0"

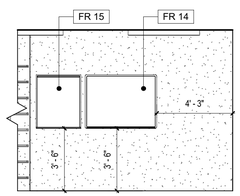

10 STORAGE 129

1/4" = 1'-0"

IDENTIFICATION STAMP
DIV. OF THE STATE ARCHITECT
APP: 03-121324 INC: A
REVIEWED FOR
SS ☐ FLS ☐ ACS ☑
DATE: 09/14/2022

OFFICE OF THE STATE FIRE MARSHAL
APPROVED FIRE AND PANIC ONLY
09/07/22
21-0233
Approval of this plan does not authorize or approve any omission or deviation from applicable regulations. Final approval is subject to field inspection. One set of approved plans shall be available on the project site at all times.

DGS GENERAL SERVICES

Department of General Services
Architecture & Engineering Sections
State of California
Real Estate Services Division
Project Management & Development Branch
707 Third Street, Suite 4-105
West Sacramento, California 95605

LICENSED ARCHITECT
JEREMY K. KHOO
C-35651
REN. 05/31/23
STATE OF CALIFORNIA

DMV
State of California
Department of Motor Vehicles

Issue		
No.	Date	Description
1	9/2/22	

Project
SANTA MARIA FIELD OFFICE REPLACEMENT

2770 SANTA MARIA WAY
SANTA MARIA, CA 93455
SANTA MARIA COUNTY

DEPT OF MOTOR VEHICLES

Supervisor	Designed	Drawn
MG	GP	JK

DSA App No.	SFM Permit No.
03-121324	21-S-0233-CP-ER

Sheet Title
INTERIOR ELEVATIONS

Project Number
DGS000000140725

Sheet Scale

Sheet Number
A223

Copyright © 2020, California Department of General Services- Real Estate Services Division

C:\Projects\000000000140725_ARC_Project Master_22_Jeremy.Khoo58F93.rvt
7/12/2022 11:59:30 AM

RELATIVE BORDER SCALE IN INCHES 0 1 2

Keynote Legend	
Key Value	Keynote Text
SC 02	16" METAL TRIM CORNICE
SC 03	CMU WALL
SC 06	SPANDREL PANEL
SC 10	RIGID INSULATION OVER METAL DECK
SC 15	16" DEEP FORMED METAL PANEL CANOPY
SC 19	SOLAR TUBE
SC 20	AC UNIT
SC 21	ACOUSTICAL LAY IN CEILING
SC 29	METAL PANEL SYSTEM SEE SHEET A507
SC 30	OPEN WEB JOISTS, SEE STRUCTURAL
SC 31	LINEAR METAL PANEL OVER GYP BOARD

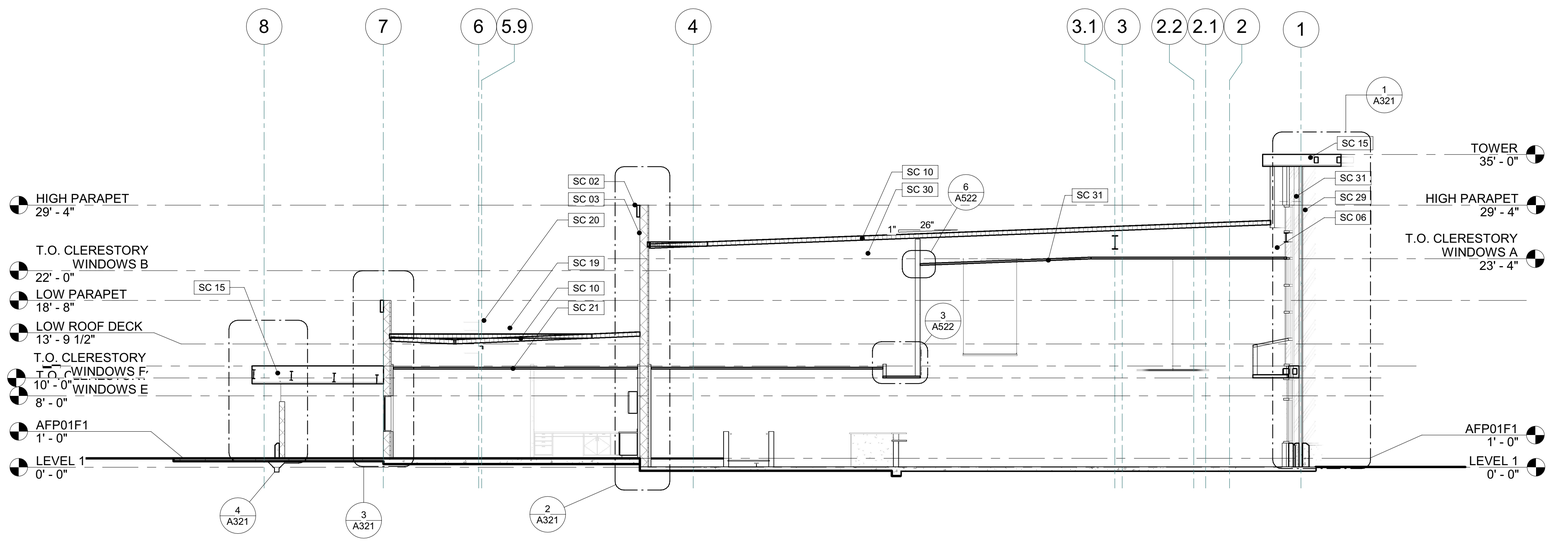

1 SECTION 1 — 1/8" = 1'-0"

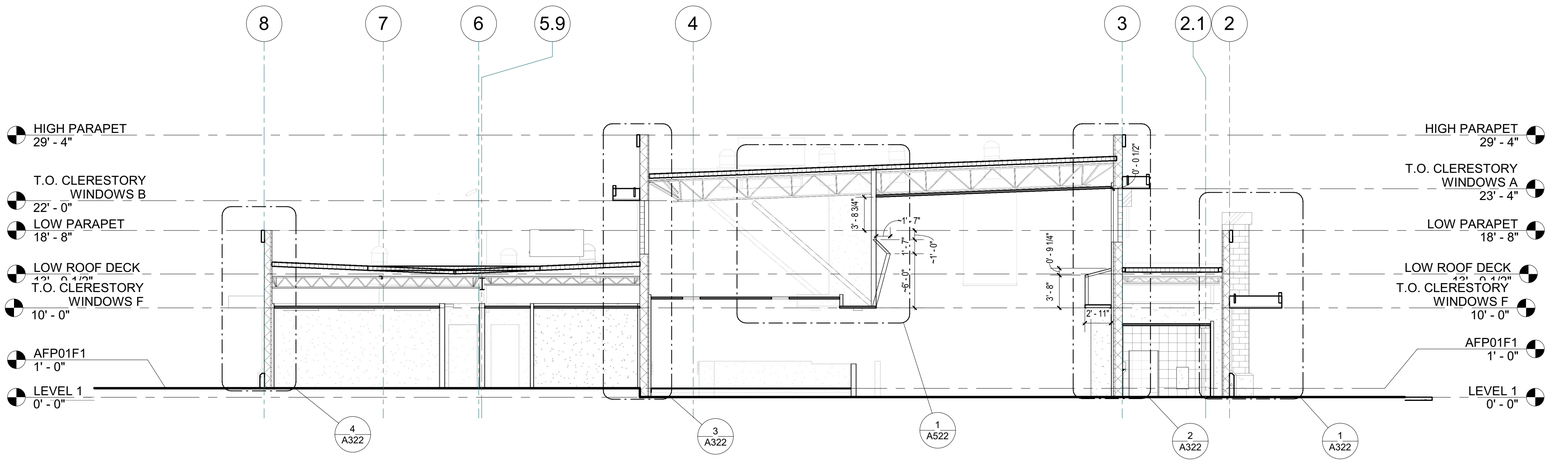

2 SECTION 2 — 1/8" = 1'-0"

IDENTIFICATION STAMP
DIV. OF THE STATE ARCHITECT
APP: 03-121324 INC:
REVIEWED FOR
SS ☐ FLS ☐ ACS ☑
DATE: 09/14/2022

OFFICE OF THE STATE FIRE MARSHAL
APPROVED FIRE AND PANIC ONLY
09/07/22
21-0233
Approval of this plan does not authorize or approve any omission or deviation from applicable regulations. Final approval is subject to field inspection. One set of approved plans shall be available on the project site at all times.

DGS GENERAL SERVICES

Department of General Services
Architecture & Engineering Sections
State of California
Real Estate Services Division
Project Management & Development Branch
707 Third Street, Suite 4-105
West Sacramento, California 95605

LICENSED ARCHITECT
JEREMY K. KHOO
C-35651
REN. 05/31/23
STATE OF CALIFORNIA

DMV
State of California
Department of Motor Vehicles

Issue		
No.	Date	Description
1	9/2/22	

Project
SANTA MARIA FIELD OFFICE REPLACEMENT

2770 SANTA MARIA WAY
SANTA MARIA, CA 93455
SANTA MARIA COUNTY

DEPT OF MOTOR VEHICLES

Supervisor	Designed	Drawn
MG	GP	JK

DSA App No.	SFM Permit No.
03-121324	21-S-0233-CP-ER

Sheet Title
BUILDING SECTIONS

Project Number
DGS000000140725

Sheet Scale

Sheet Number
A311

Copyright © 2020, California Department of General Services- Real Estate Services Division

C:\Projects\000000000140725_ARC_Project Master_22_Jeremy.Khoo58F93.rvt
7/12/2022 11:59:36 AM

RELATIVE BORDER SCALE IN INCHES 0 1 2

Keynote Legend	
Key Value	Keynote Text
SC 01	PRECAST CONCRETE WAINSCOT
SC 02	16" METAL TRIM CORNICE
SC 03	CMU WALL
SC 11	DUST CAP SLOPE@SOFFIT
SC 13	LARGE PENDANT LIGHT
SC 15	16" DEEP FORMED METAL PANEL CANOPY
SC 17	CANOPY ROOF AND COLUMNS SHOWN AS TRANSPARENT FOR CLARITY, SEE A415 FOR CANOPY
SC 18	RAIN WATER LEADER
SC 19	SOLAR TUBE
SC 20	AC UNIT
SC 21	ACOUSTICAL LAY IN CEILING
SC 26	MEMBRANE ROOFING

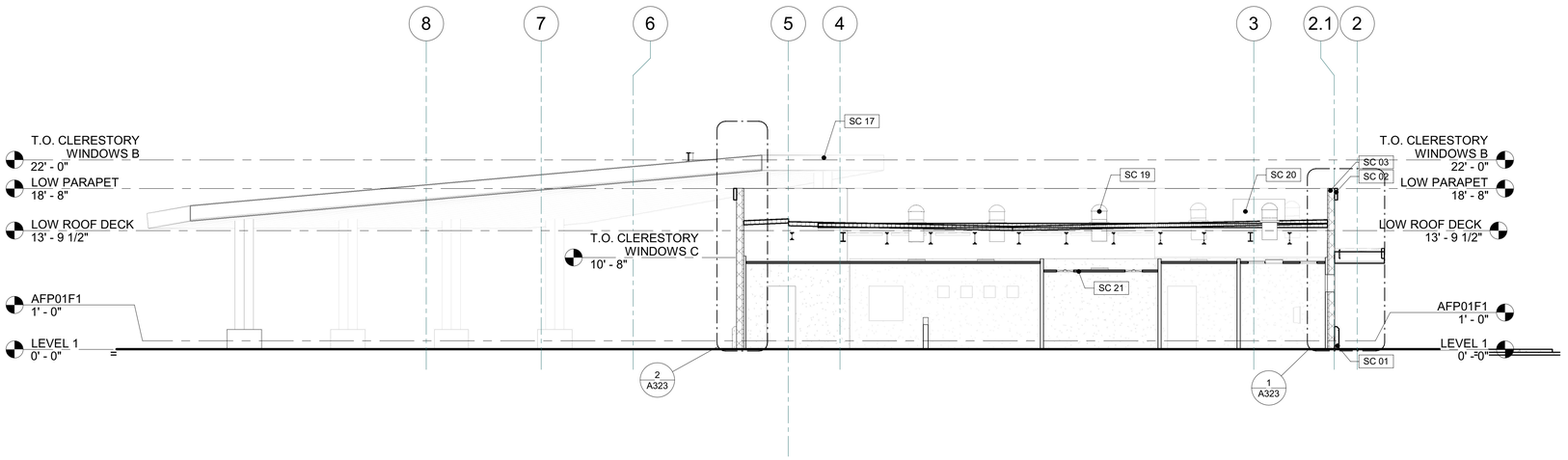

1 SECTION 3 — 1/8" = 1'-0"

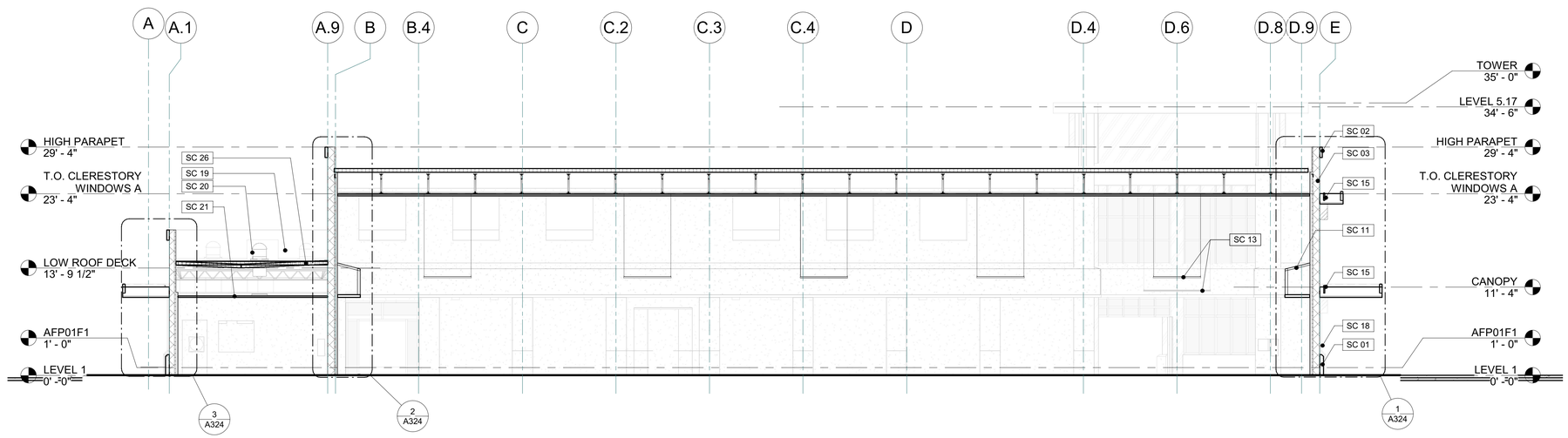

2 SECTION 4 — 1/8" = 1'-0"

IDENTIFICATION STAMP
DIV. OF THE STATE ARCHITECT
APP: 03-121324 INC:
REVIEWED FOR
SS ☐ FLS ☐ ACS ☑
DATE: 09/14/2022

OFFICE OF THE STATE FIRE MARSHAL
APPROVED FIRE AND PANIC ONLY
09/07/22
21-0233
Approval of this plan does not authorize or approve any omission or deviation from applicable regulations. Final approval is subject to field inspection. One set of approved plans shall be available on the project site at all times.

DGS GENERAL SERVICES
Department of General Services
Architecture & Engineering Sections
State of California
Real Estate Services Division
Project Management & Development Branch
707 Third Street, Suite 4-105
West Sacramento, California 95605

LICENSED ARCHITECT
JEREMY K. KHOO
C-35651
REN. 05/31/23
STATE OF CALIFORNIA

DMV
State of California
Department of Motor Vehicles

Issue		
No.	Date	Description
1	9/2/22	

Project
SANTA MARIA FIELD OFFICE REPLACEMENT

2770 SANTA MARIA WAY
SANTA MARIA, CA 93455
SANTA MARIA COUNTY

DEPT OF MOTOR VEHICLES

Supervisor	Designed	Drawn
MG	GP	JK

DSA App No.	SFM Permit No.
03-121324	21-S-0233-CP-ER

Sheet Title
BUILDING SECTIONS

Project Number
DGS000000140725

Sheet Scale

Sheet Number
A312

Copyright © 2020, California Department of General Services- Real Estate Services Division

C:\Projects\000000000140725_ARC_Project Master_22_Jeremy.Khoo58F93.rvt
7/12/2022 11:59:43 AM

RELATIVE BORDER SCALE IN INCHES

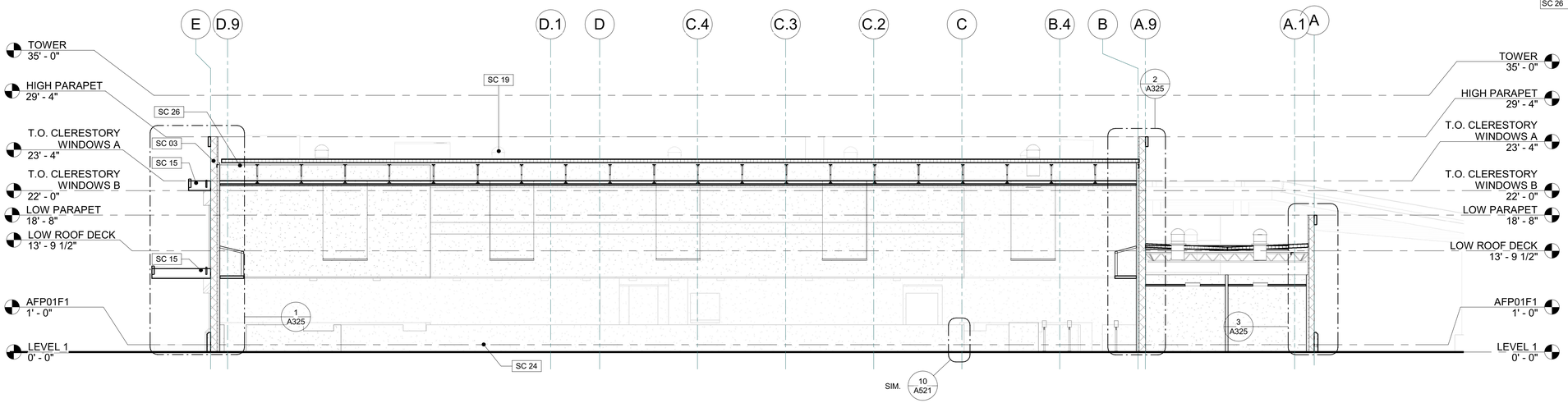

Keynote Legend	
Key Value	Keynote Text
SC 03	CMU WALL
SC 15	16" DEEP FORMED METAL PANEL CANOPY
SC 19	SOLAR TUBE
SC 24	ACCESSIBLE FLOOR SYSTEM
SC 26	MEMBRANE ROOFING

1 SECTION 5 — 1/8" = 1'-0"

IDENTIFICATION STAMP
DIV. OF THE STATE ARCHITECT
APP: 03-121324 INC:
REVIEWED FOR
SS ☐ FLS ☐ ACS ☑
DATE: 09/14/2022

OFFICE OF THE STATE FIRE MARSHAL
APPROVED FIRE AND PANIC ONLY
09/07/22
21-0233
Approval of this plan does not authorize or approve any omission or deviation from applicable regulations. Final approval is subject to field inspection. One set of approved plans shall be available on the project site at all times.

DGS GENERAL SERVICES
Department of General Services
Architecture & Engineering Sections
State of California
Real Estate Services Division
Project Management & Development Branch
707 Third Street, Suite 4-105
West Sacramento, California 95605

LICENSED ARCHITECT
JEREMY K. KHOO
C-35651
REN. 05/31/23
STATE OF CALIFORNIA

DMV
State of California
Department of Motor Vehicles

Issue

No.	Date	Description
1	9/2/22	

Project
SANTA MARIA FIELD OFFICE REPLACEMENT

2770 SANTA MARIA WAY
SANTA MARIA, CA 93455
SANTA MARIA COUNTY

DEPT OF MOTOR VEHICLES

Supervisor	Designed	Drawn
MG	GP	JK

DSA App No.	SFM Permit No.
03-121324	21-S-0233-CP-ER

Sheet Title
BUILDING SECTIONS

Project Number
DGS000000140725

Sheet Scale

Sheet Number
A313

Copyright © 2020, California Department of General Services- Real Estate Services Division

7/12/2022 11:59:48 AM C:\Projects\000000000140725_ARC_Project Master_22_Jeremy.Khoo58F93.rvt

RELATIVE BORDER SCALE IN INCHES 0 1 2

Keynote Legend	
Key Value	Keynote Text
SC 01	PRECAST CONCRETE WAINSCOT
SC 02	16" METAL TRIM CORNICE
SC 03	CMU WALL
SC 09	INTEGRATED LOUVERED SHADE OF WINDOW SYSTEM
SC 10	RIGID INSULATION OVER METAL DECK
SC 15	16" DEEP FORMED METAL PANEL CANOPY
SC 16	WINDOW SEE SCHEDULE
SC 21	ACOUSTICAL LAY IN CEILING
SC 24	ACCESSIBLE FLOOR SYSTEM
SC 38	FURRED WALL

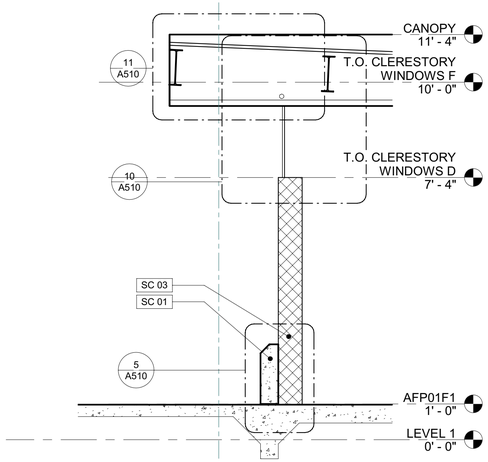

4 WALL SECTION 4 — 1/2" = 1'-0"

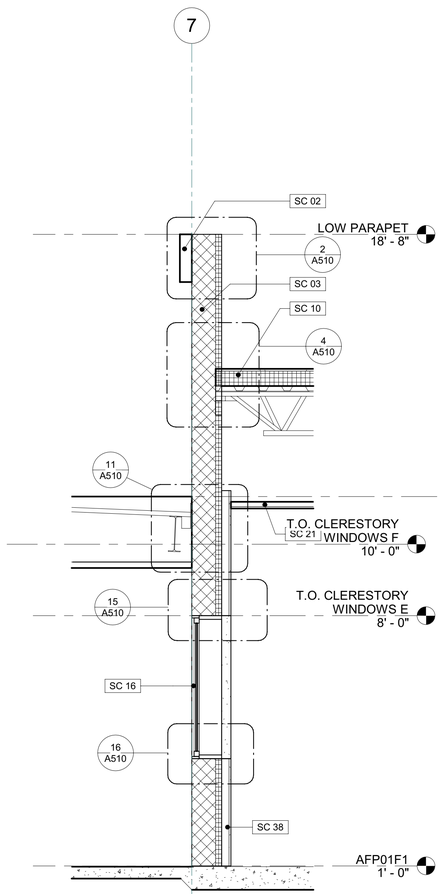

3 WALL SECTION 3 — 1/2" = 1'-0"

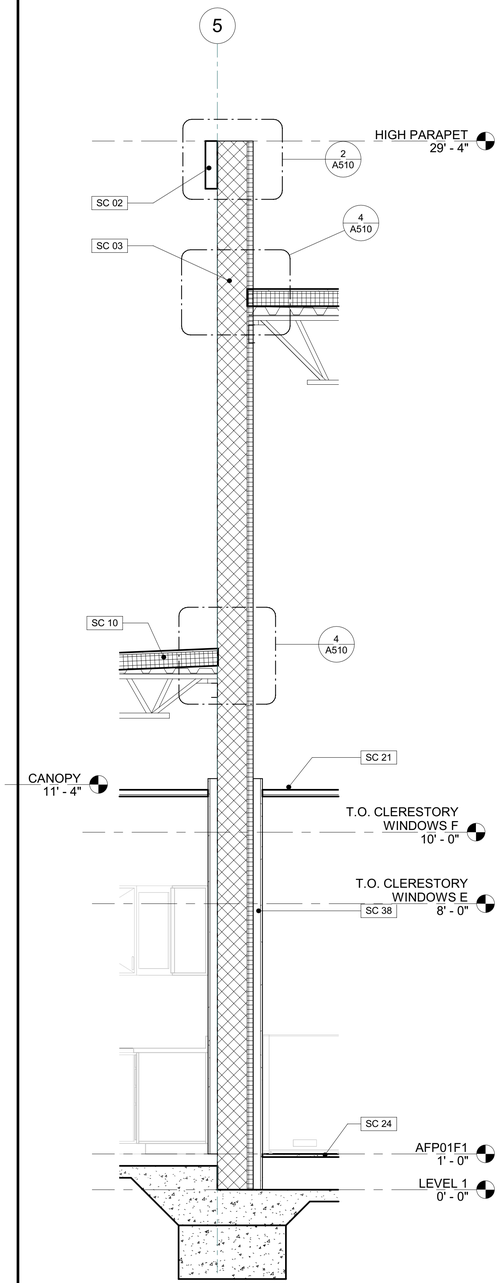

2 WALL SECTION 2 — 1/2" = 1'-0"

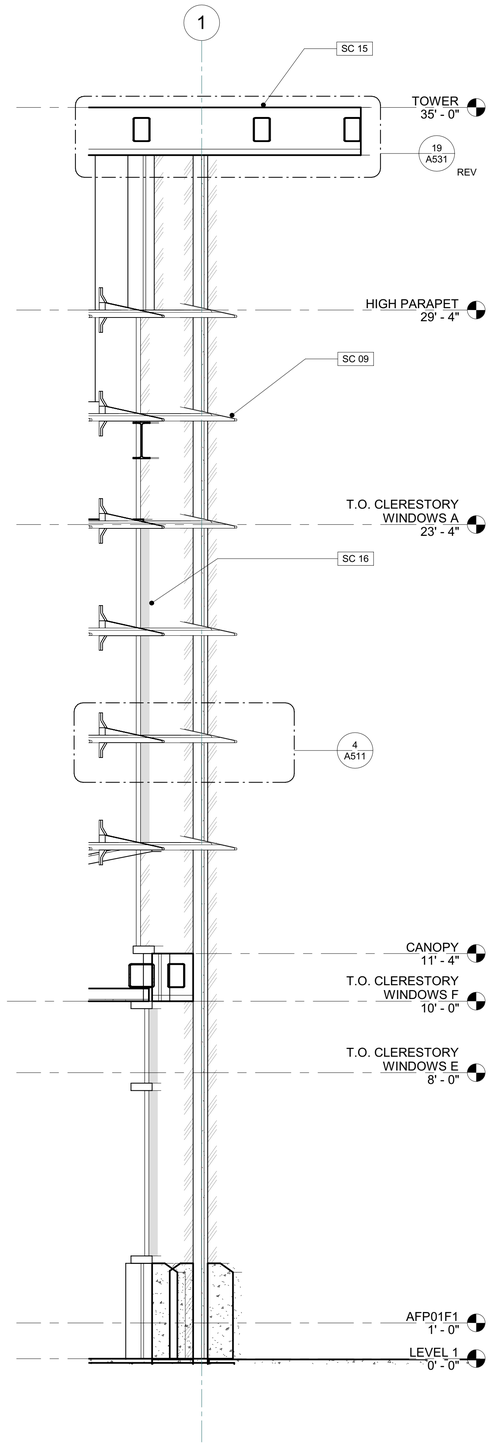

1 WALL SECTION 1 — 1/2" = 1'-0"

IDENTIFICATION STAMP
DIV. OF THE STATE ARCHITECT
APP: 03-121324 INC:
REVIEWED FOR
SS ☐ FLS ☐ ACS ☑
DATE: 09/14/2022

OFFICE OF THE STATE FIRE MARSHAL
APPROVED FIRE AND PANIC ONLY
09/07/22
21-0233
Approval of this plan does not authorize or approve any omission or deviation from applicable regulations. Final approval is subject to field inspection. One set of approved plans shall be available on the project site at all times.

DGS GENERAL SERVICES
Department of General Services
Architecture & Engineering Sections
State of California
Real Estate Services Division
Project Management & Development Branch
707 Third Street, Suite 4-105
West Sacramento, California 95605

LICENSED ARCHITECT
JEREMY K. KHOO
C-35651
REN. 05/31/23
STATE OF CALIFORNIA

DMV
State of California
Department of Motor Vehicles

Issue		
No.	Date	Description
1	9/2/22	

Project
SANTA MARIA FIELD OFFICE REPLACEMENT
2770 SANTA MARIA WAY
SANTA MARIA, CA 93455
SANTA MARIA COUNTY

DEPT OF MOTOR VEHICLES

Supervisor	Designed	Drawn
Approver	Designer	Author

DSA App No.	SFM Permit No.
03-121324	21-S-0233-CP-ER

Sheet Title
WALL SECTIONS

Project Number
DGS000000140725

Sheet Scale

Sheet Number
A321

Copyright © 2020, California Department of General Services- Real Estate Services Division

C:\Projects\000000000140725_ARC_Project Master_22_Jeremy.Khoo58F93.rvt
7/12/2022 11:59:53 AM

RELATIVE BORDER SCALE IN INCHES

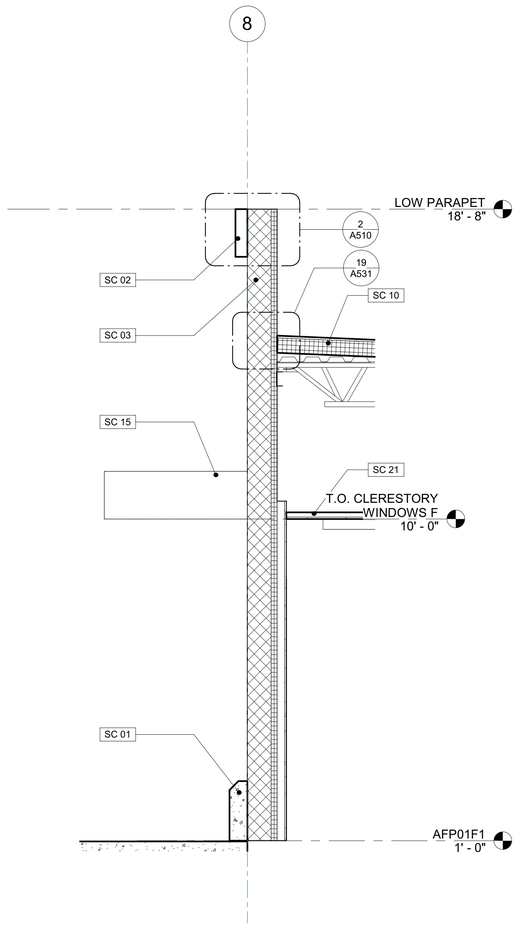

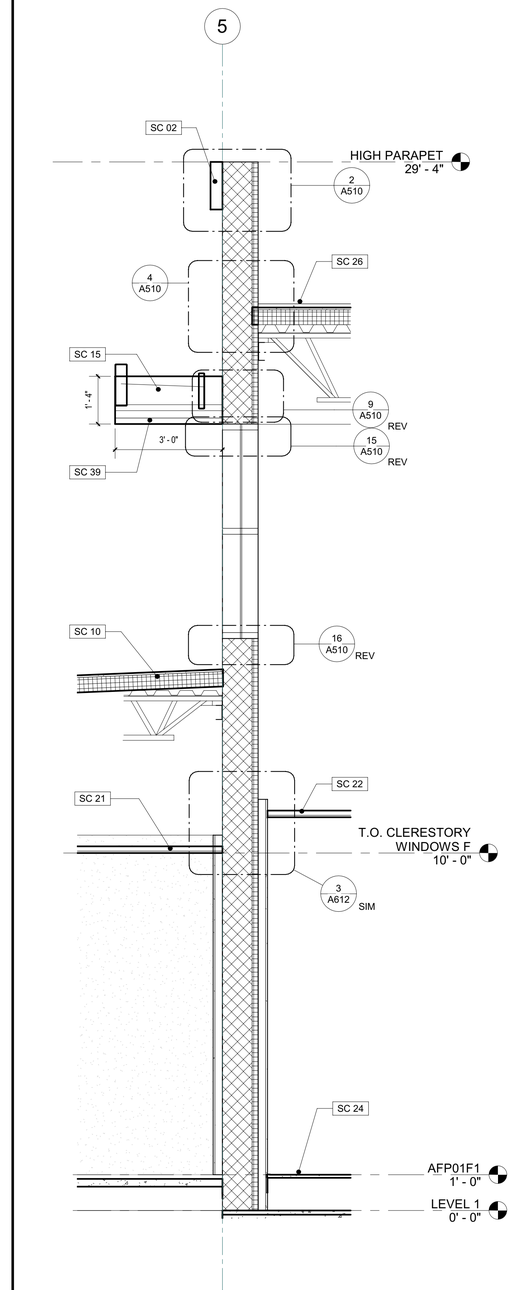

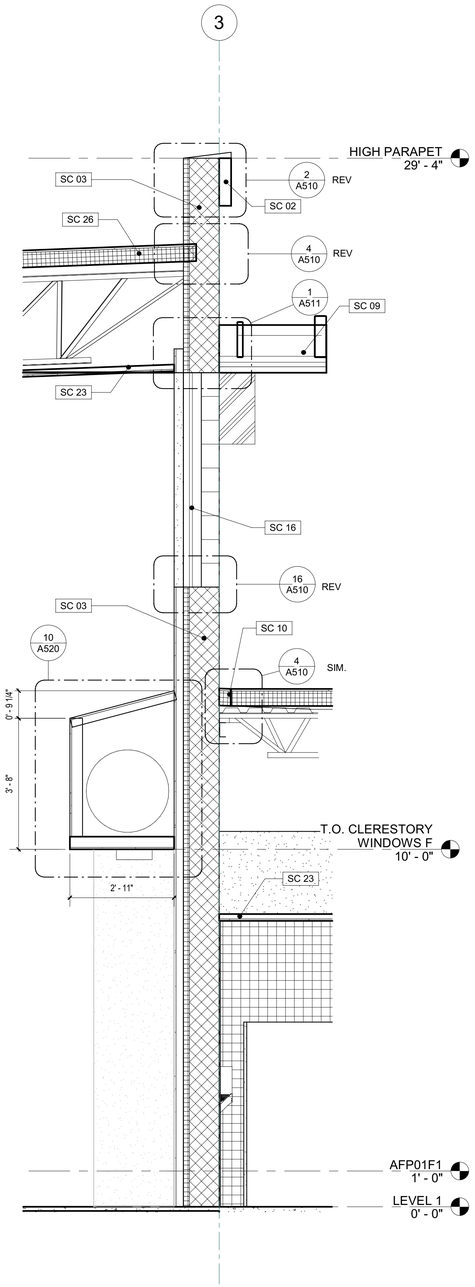

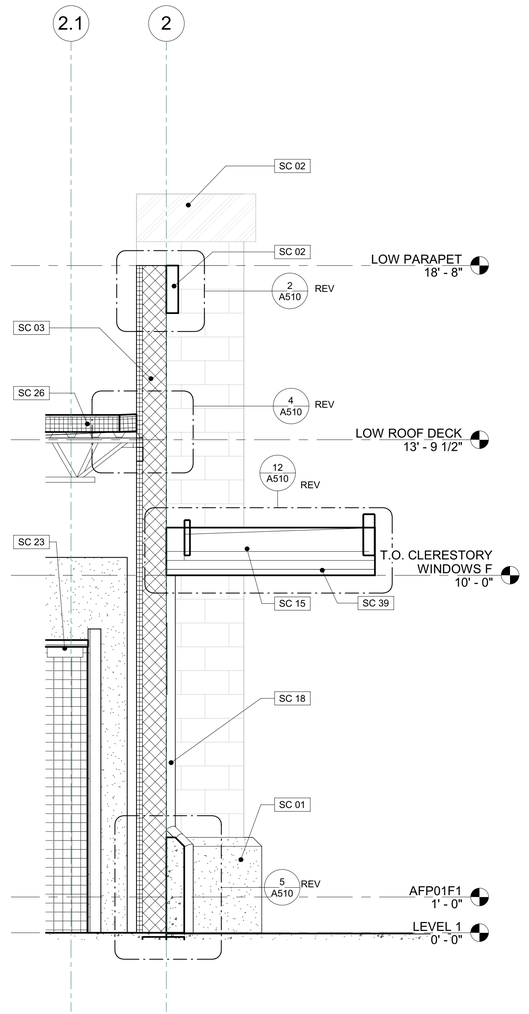

Keynote Legend	
Key Value	Keynote Text
SC 01	PRECAST CONCRETE WAINSCOT
SC 02	16" METAL TRIM CORNICE
SC 03	CMU WALL
SC 09	INTEGRATED LOUVERED SHADE OF WINDOW SYSTEM
SC 10	RIGID INSULATION OVER METAL DECK
SC 15	16" DEEP FORMED METAL PANEL CANOPY
SC 16	WINDOW SEE SCHEDULE
SC 18	RAIN WATER LEADER
SC 21	ACOUSTICAL LAY IN CEILING
SC 22	SUSPENDED EGG CRATE CEILING
SC 23	SUSPENDED GYP BOARD CEILING
SC 24	ACCESSIBLE FLOOR SYSTEM
SC 26	MEMBRANE ROOFING
SC 39	SOFFIT PANEL

4	WALL SECTION 8	1/2" = 1'-0"
3	WALL SECTION 7	1/2" = 1'-0"
2	WALL SECTION 6	1/2" = 1'-0"
1	WALL SECTION 5	1/2" = 1'-0"

IDENTIFICATION STAMP
DIV. OF THE STATE ARCHITECT
APP: 03-121324 INC:
REVIEWED FOR
SS ☐ FLS ☐ ACS ☑
DATE: 09/14/2022

OFFICE OF THE STATE FIRE MARSHAL
APPROVED FIRE AND PANIC ONLY
09/07/22
21-0233
Approval of this plan does not authorize or approve any omission or deviation from applicable regulations. Final approval is subject to field inspection. One set of approved plans shall be available on the project site at all times.

GENERAL SERVICES

Department of General Services
Architecture & Engineering Sections
State of California
Real Estate Services Division
Project Management & Development Branch
707 Third Street, Suite 4-105
West Sacramento, California 95605

LICENSED ARCHITECT
JEREMY K. KHOO
C-35651
REN. 05/31/23
STATE OF CALIFORNIA

DMV
State of California
Department of Motor Vehicles

Issue

No.	Date	Description
1	9/2/22	

Project
SANTA MARIA FIELD OFFICE REPLACEMENT
2770 SANTA MARIA WAY
SANTA MARIA, CA 93455
SANTA MARIA COUNTY

DEPT OF MOTOR VEHICLES

Supervisor	Designed	Drawn
MG	GP	JK

DSA App No.	SFM Permit No.
03-121324	21-S-0233-CP-ER

Sheet Title
WALL SECTIONS

Project Number
DGS000000140725

Sheet Scale
Sheet Number
A322

© Copyright © 2020, California Department of General Services - Real Estate Services Division

C:\Projects\000000000000140725_ARC_Project Master_22_Jeremy.Khoo98F93.rvt
7/12/2022 11:59:59 AM

RELATIVE BORDER SCALE IN INCHES

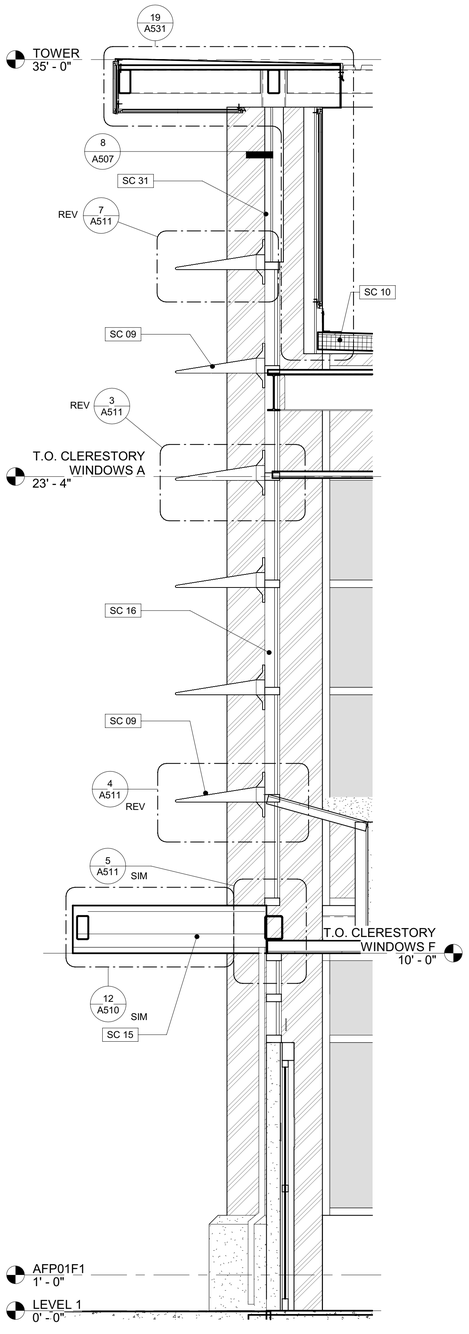

4 WALL SECTION 12

1/2" = 1'-0"

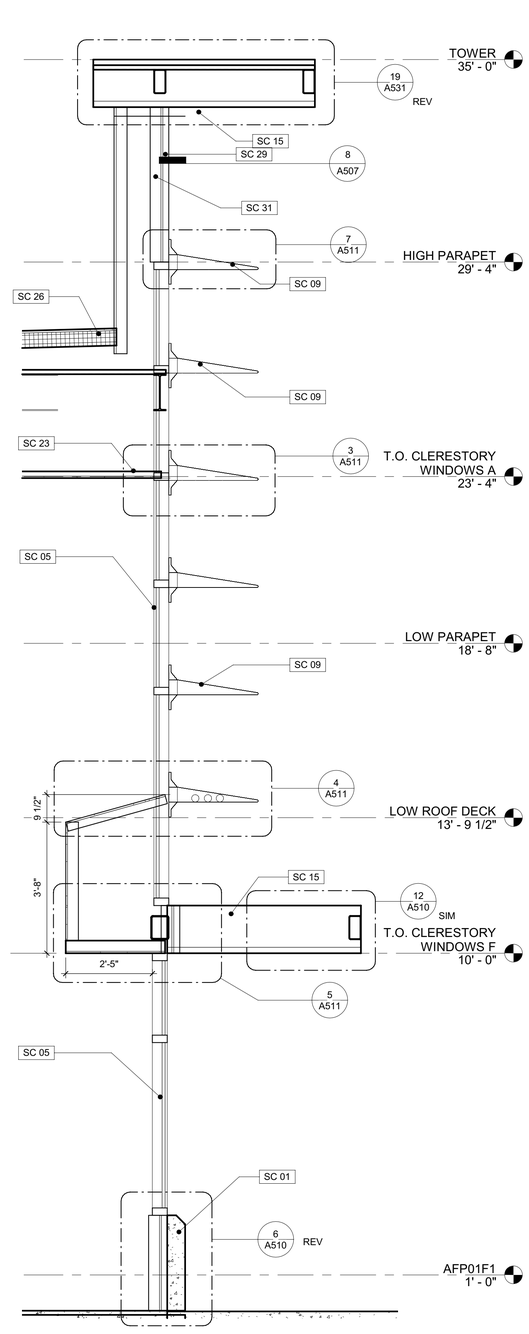

3 WALL SECTION 11

1/2" = 1'-0"

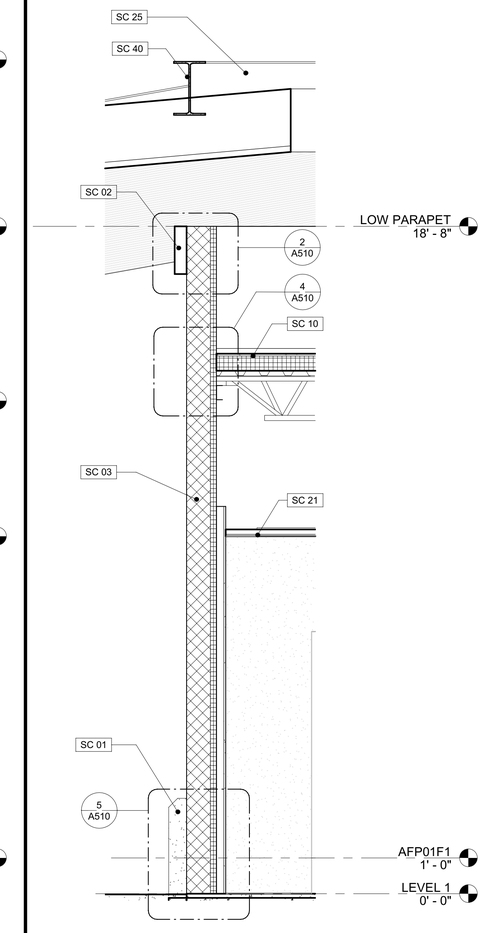

2 WALL SECTION 10

1/2" = 1'-0"

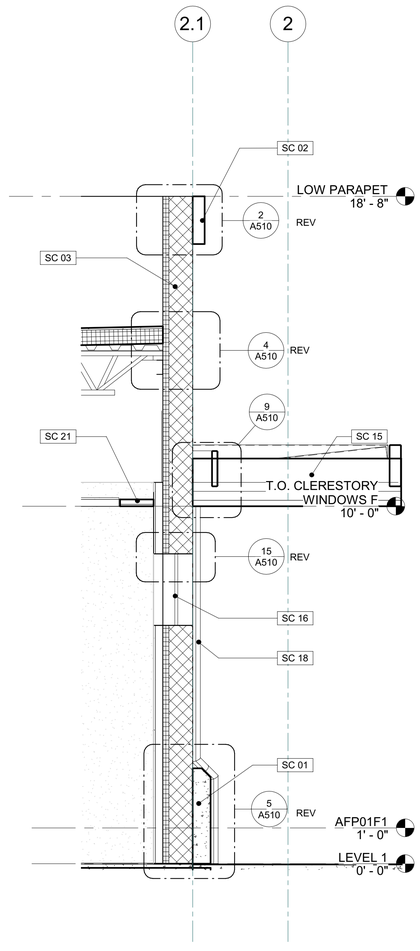

1 WALL SECTION 9

1/2" = 1'-0"

Keynote Legend	
Key Value	Keynote Text
SC 01	PRECAST CONCRETE WAINSCOT
SC 02	16" METAL TRIM CORNICE
SC 03	CMU WALL
SC 05	STOREFRONT WINDOW SYSTEM
SC 09	INTEGRATED LOUVERED SHADE OF WINDOW SYSTEM
SC 10	RIGID INSULATION OVER METAL DECK
SC 15	16" DEEP FORMED METAL PANEL CANOPY
SC 16	WINDOW SEE SCHEDULE
SC 18	RAIN WATER LEADER
SC 21	ACOUSTICAL LAY IN CEILING
SC 23	SUSPENDED GYP BOARD CEILING
SC 25	STANDING METAL ROOF
SC 26	MEMBRANE ROOFING
SC 29	METAL PANEL SYSTEM SEE SHEET A507
SC 31	LINEAR METAL PANEL OVER GYP BOARD
SC 40	BEAM AT DRIVER CANOPY

IDENTIFICATION STAMP
DIV. OF THE STATE ARCHITECT
APP: 03-121324 INC:
REVIEWED FOR
SS ☐ FLS ☐ ACS ☑
DATE: 09/14/2022

OFFICE OF THE STATE FIRE MARSHAL
APPROVED FIRE AND PANIC ONLY
09/07/22
21-0233
Approval of this plan does not authorize or approve any omission or deviation from applicable regulations. Final approval is subject to field inspection. One set of approved plans shall be available on the project site at all times.

DGS GENERAL SERVICES
Department of General Services
Architecture & Engineering Sections
State of California
Real Estate Services Division
Project Management & Development Branch
707 Third Street, Suite 4-105
West Sacramento, California 95605

LICENSED ARCHITECT
JEREMY K. KHOO
C-35651
REN. 05/31/23
STATE OF CALIFORNIA

DMV
State of California
Department of Motor Vehicles

Issue

No.	Date	Description
1	9/2/22	

Project
SANTA MARIA FIELD OFFICE REPLACEMENT
2770 SANTA MARIA WAY
SANTA MARIA, CA 93455
SANTA MARIA COUNTY

DEPT OF MOTOR VEHICLES

Supervisor	Designed	Drawn
MG	GP	JK

DSA App No. 03-121324
SFM Permit No. 21-S-0233-CP-ER

Sheet Title
WALL SECTIONS

Project Number
DGS000000140725

Sheet Scale

Sheet Number
A323

Copyright © 2020, California Department of General Services, Real Estate Services Division

C:\Projects\000000000000140725_ARC_Project Master_22_Jeremy.Khoo58F93.rvt
7/12/2022 12:00:04 PM
RELATIVE BORDER SCALE IN INCHES
24 x 36

Keynote Legend	
Key Value	Keynote Text
SC 01	PRECAST CONCRETE WAINSCOT
SC 02	16" METAL TRIM CORNICE
SC 03	CMU WALL
SC 10	RIGID INSULATION OVER METAL DECK
SC 15	16" DEEP FORMED METAL PANEL CANOPY
SC 18	RAIN WATER LEADER
SC 21	ACOUSTICAL LAY IN CEILING
SC 23	SUSPENDED GYP BOARD CEILING
SC 26	MEMBRANE ROOFING

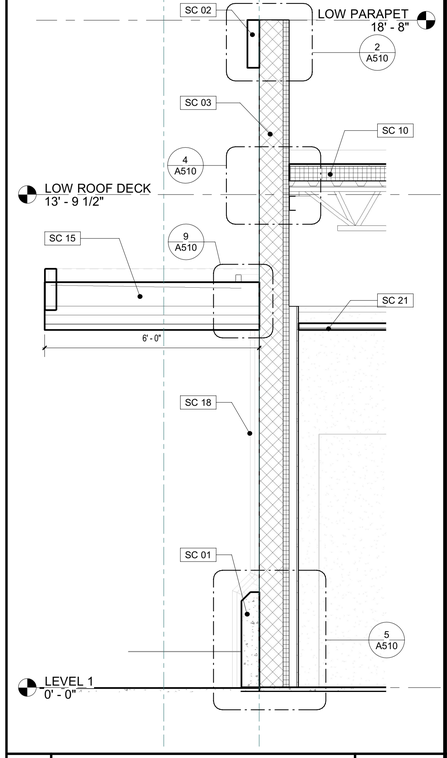

3 WALL SECTION 15 — 1/2" = 1'-0"

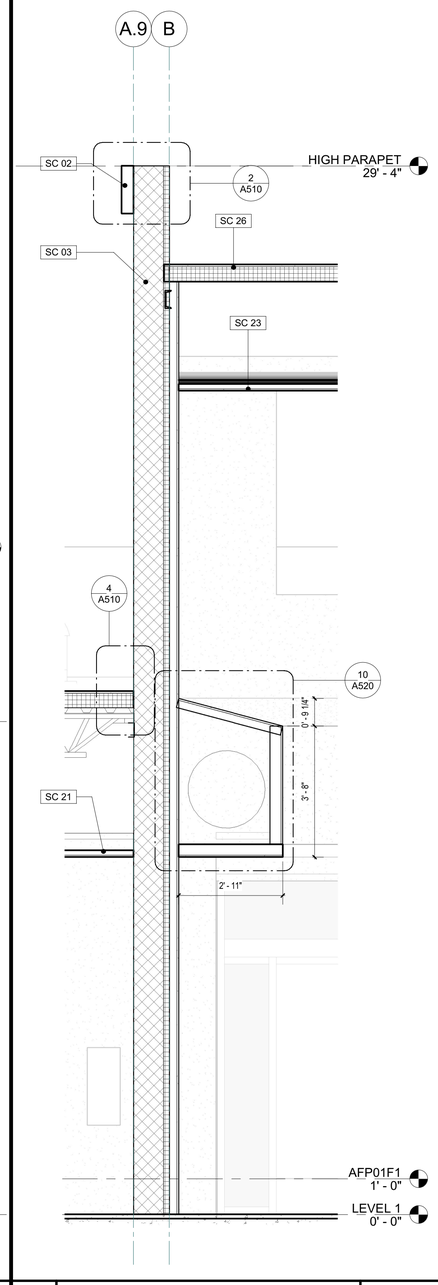

2 WALL SECTION 14 — 1/2" = 1'-0"

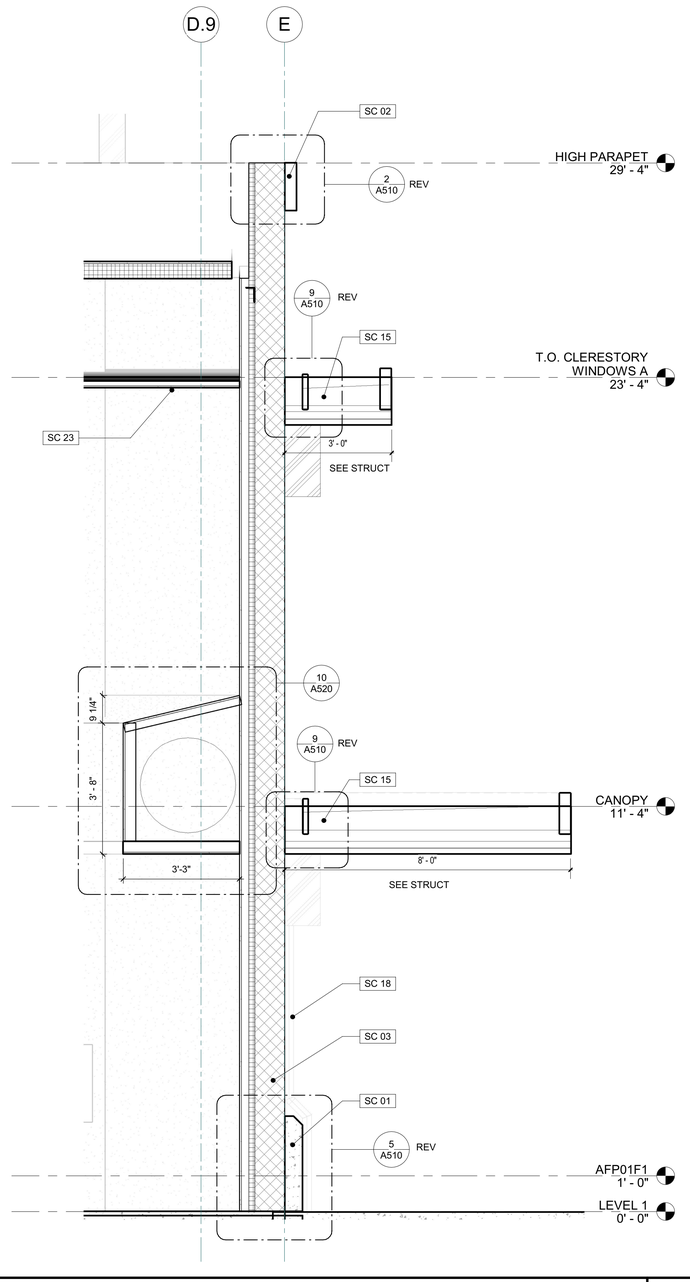

1 WALL SECTION 13 — 1/2" = 1'-0"

IDENTIFICATION STAMP
DIV. OF THE STATE ARCHITECT
APP: 03-121324 INC:
REVIEWED FOR
SS ☐ FLS ☐ ACS ☑
DATE: 09/14/2022

OFFICE OF THE STATE FIRE MARSHAL
APPROVED FIRE AND PANIC ONLY
09/07/22
21-0233
Approval of this plan does not authorize or approve any omission or deviation from applicable regulations. Final approval is subject to field inspection. One set of approved plans shall be available on the project site at all times.

DGS GENERAL SERVICES

Department of General Services
Architecture & Engineering Sections
State of California
Real Estate Services Division
Project Management & Development Branch
707 Third Street, Suite 4-105
West Sacramento, California 95605

LICENSED ARCHITECT
JEREMY K. KHOO
C-35651
REN. 05/31/23
STATE OF CALIFORNIA

DMV
State of California
Department of Motor Vehicles

Issue		
No.	Date	Description
1	9/2/22	

Project
SANTA MARIA FIELD OFFICE REPLACEMENT
2770 SANTA MARIA WAY
SANTA MARIA, CA 93455
SANTA MARIA COUNTY

DEPT OF MOTOR VEHICLES

Supervisor	Designed	Drawn
MG	GP	JK

DSA App No.	SFM Permit No.
03-121324	21-S-0233-CP-ER

Sheet Title
WALL SECTIONS

Project Number
DGS000000140725

Sheet Scale

Sheet Number
A324

Copyright © 2020, California Department of General Services: Real Estate Services Division

C:\Projects\000000000000140725_ARC_Project Master_22_Jeremy.Khoo58F93.rvt
7/12/2022 12:00:10 PM

RELATIVE BORDER SCALE IN INCHES

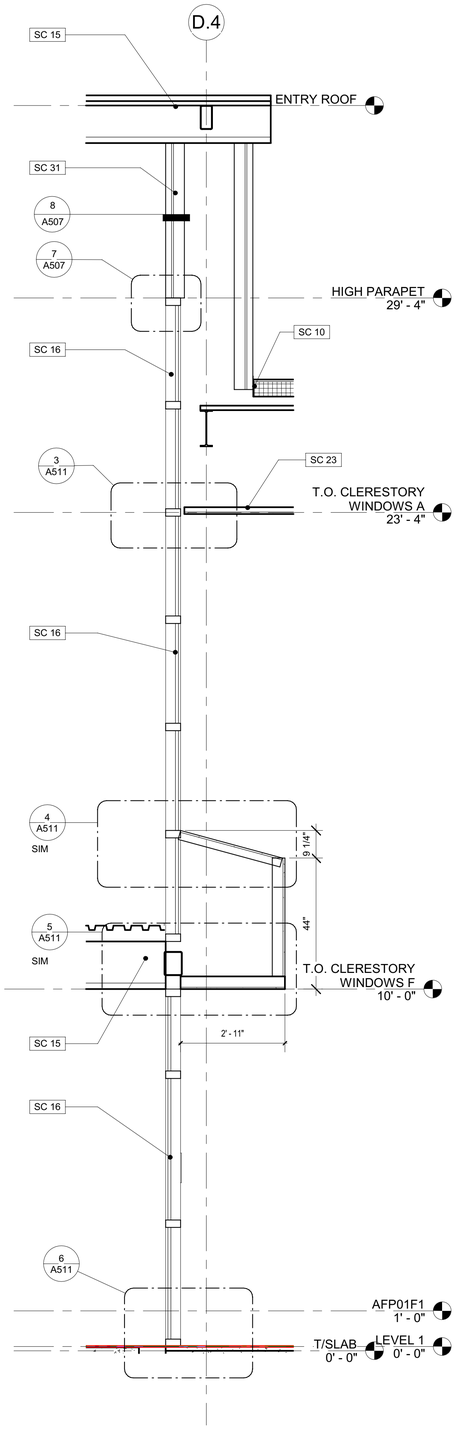

4 WALL SECTION 19 — 1/2" = 1'-0"

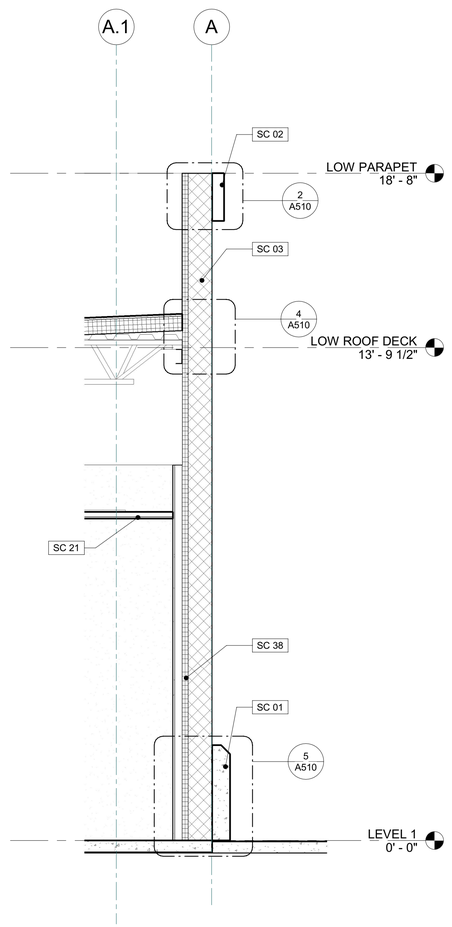

3 WALL SECTION 18 — 1/2" = 1'-0"

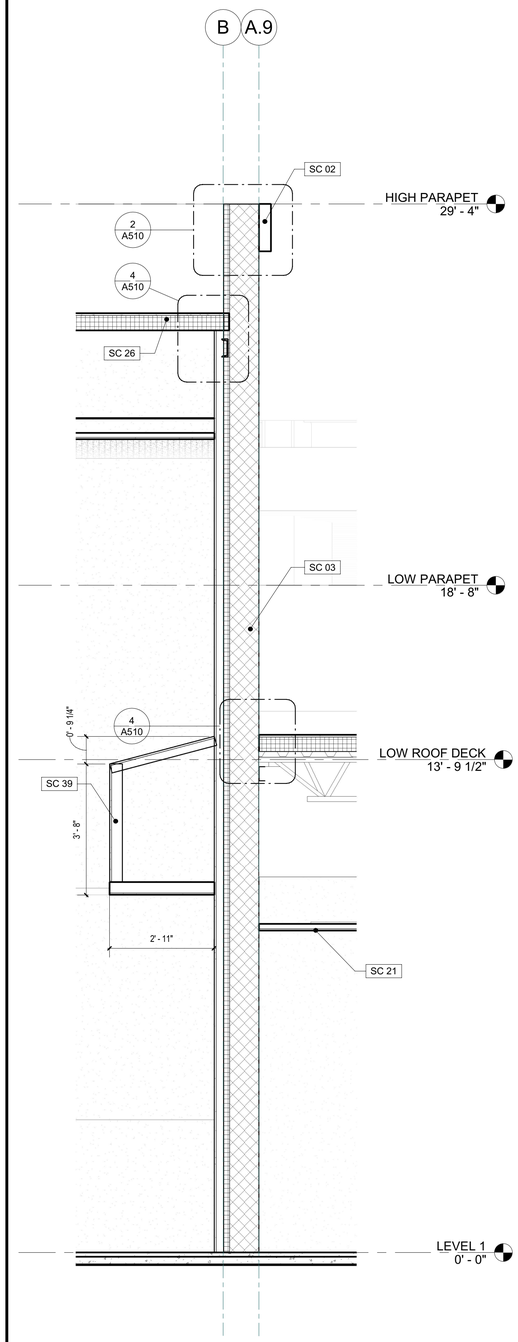

2 WALL SECTION 17 — 1/2" = 1'-0"

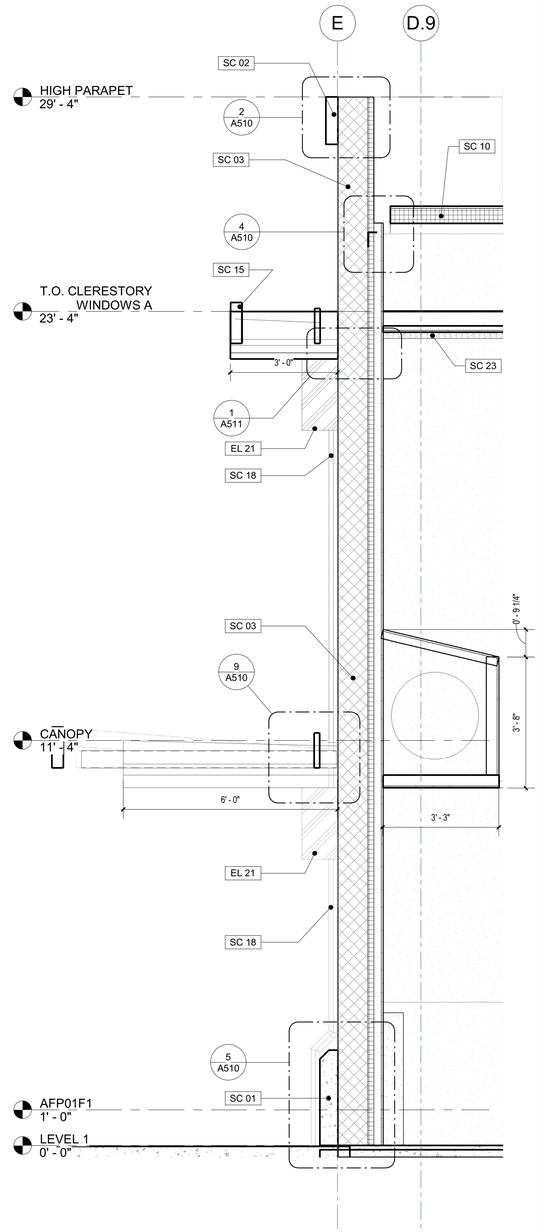

1 WALL SECTION 16 — 1/2" = 1'-0"

Keynote Legend	
Key Value	Keynote Text
EL 21	8x12x24 BENT SHEET METAL BLOCK
SC 01	PRECAST CONCRETE WAINSCOT
SC 02	16" METAL TRIM CORNICE
SC 03	CMU WALL
SC 10	RIGID INSULATION OVER METAL DECK
SC 15	16" DEEP FORMED METAL PANEL CANOPY
SC 16	WINDOW SEE SCHEDULE
SC 18	RAIN WATER LEADER
SC 21	ACOUSTICAL LAY IN CEILING
SC 23	SUSPENDED GYP BOARD CEILING
SC 26	MEMBRANE ROOFING
SC 31	LINEAR METAL PANEL OVER GYP BOARD
SC 38	FURRED WALL
SC 39	SOFFIT PANEL

IDENTIFICATION STAMP
DIV. OF THE STATE ARCHITECT
APP: 03-121324 INC: A
REVIEWED FOR
SS ☐ FLS ☐ ACS ☑
DATE: 09/14/2022

OFFICE OF THE STATE FIRE MARSHAL
APPROVED FIRE AND PANIC ONLY
09/07/22
21-0233
Approval of this plan does not authorize or approve any omission or deviation from applicable regulations. Final approval is subject to field inspection. One set of approved plans shall be available on the project site at all times.

DGS GENERAL SERVICES
Department of General Services
Architecture & Engineering Sections
State of California
Real Estate Services Division
Project Management & Development Branch
707 Third Street, Suite 4-105
West Sacramento, California 95605

LICENSED ARCHITECT
JEREMY K. KHOO
C-35853
REN. 05/31/23
STATE OF CALIFORNIA

DMV
State of California
Department of Motor Vehicles

Issue

No.	Date	Description
1	9/2/22	

Project
SANTA MARIA FIELD OFFICE REPLACEMENT

2770 SANTA MARIA WAY
SANTA MARIA, CA 93455
SANTA MARIA COUNTY

DEPT OF MOTOR VEHICLES

Supervisor	Designed	Drawn
MG	GP	JK

DSA App No. 03-121324
SFM Permit No. 21-S-0233-CP-ER

Sheet Title
WALL SECTIONS

Project Number
DGS000000140725

Sheet Scale

Sheet Number
A325

Copyright © 2020, California Department of General Services- Real Estate Services Division

V5

C:\Projects\000000000140725_ARC_Project Master_22_Jeremy.Khoo58F93.rvt
7/12/2022 12:00:16 PM

RELATIVE BORDER SCALE IN INCHES

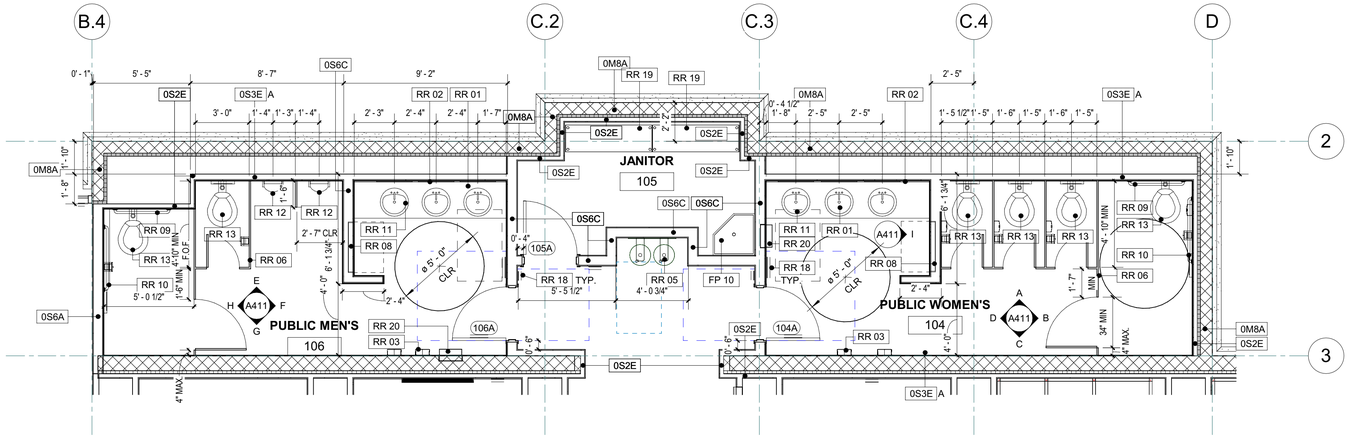

KEY PLAN

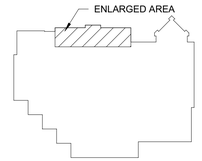

Keynote Legend	
Key Value	Keynote Text
FP 10	MOP SINK
RR 01	SOLID SURFACE COUNTER TOP
RR 02	2'x3' MIRROR
RR 03	ELECTRICAL HAND DRYER
RR 05	HI-LOW DRINKING FOUNTAIN
RR 06	CEILING HUNG TOILET PARTITIONS
RR 08	BABY CHANGING STATION
RR 09	36" GRAB BARS
RR 10	42" GRAB BARS
RR 11	LAV, SEE 10/A502
RR 12	WALL HUNG URINAL
RR 13	WALL HUNG TOILET
RR 14	TOILET PAPER DISPENSER
RR 15	SANITARY NAPKIN DISPOSAL
RR 16	URINAL SCREEN
RR 18	SIGNAGE SEE SIGNAGE SCHEDULE
RR 19	SHELVING
RR 20	WASTE RECEPTACLE
RR 21	SEAT COVER DISPENSER

GENERAL NOTES

1. ARCHITECTURAL DIMENSIONS ARE TO FACE OF STUDS/STRUCTURE OR CENTERLINE OF COLUMNS GRIDS, UNLESS NOTED OTHERWISE
2. LOCATE DOOR JAMBS 4" AWAY FROM ADJACENT WALLS UNLESS OTHERWISE DIMENSIONED.
3. ROOMS WITH FLOOR DRAINS (FD), SLOPE MAX 2% TO DRAIN
4. FOR TYPICAL BACKING/BLOCKING AT VARIOUS FIXTURES, ACCESSORIES, EQUIPMENT, CASEWORK,ETC.
5. INSTALL THERMAL INSULATION ON ALL EXTERIOR WALLS TO UNDERSIDE OF ROOF
6. FOR TOILET ACCESSORY MOUNTING HEIGHTS SEE 3 / A504
7. SEMI-RECESSED FIRE EXTINGUISHER CABINETS SEE 6 / A502 10 / A612

1 ENLARGED FLOOR PLAN - PUBLIC RESTROOMS

1/4" = 1'-0"

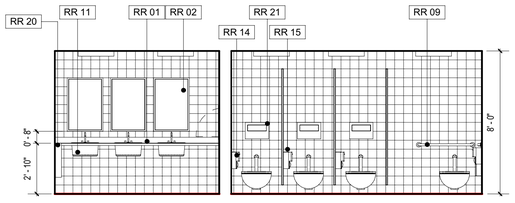

A - NORTH

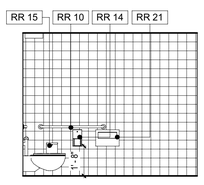

B - EAST

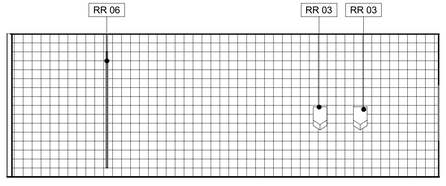

C - SOUTH

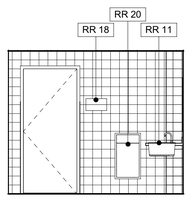

D - WEST

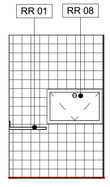

I - EAST PARTIAL

A PUBLIC RESTROOM 104

1/4" = 1'-0"

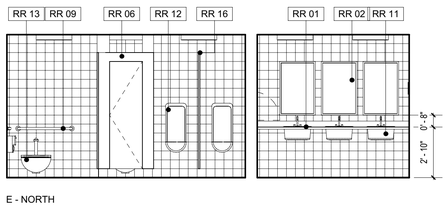

E - NORTH

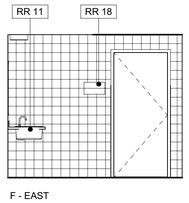

F - EAST

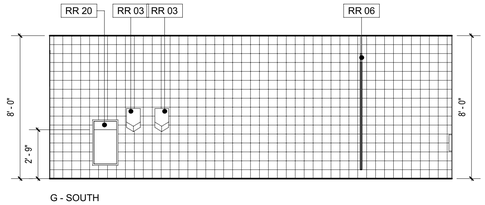

G - SOUTH

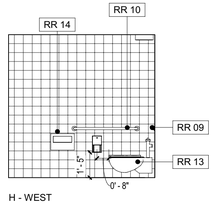

H - WEST

E PUBLIC RESTROOM 106

1/4" = 1'-0"

IDENTIFICATION STAMP
DIV. OF THE STATE ARCHITECT
APP: 03-121324 INC:
REVIEWED FOR
SS ☐ FLS ☐ ACS ☑
DATE: 09/14/2022

OFFICE OF THE STATE FIRE MARSHAL
APPROVED FIRE AND PANIC ONLY
09/07/22
21-0233
Approval of this plan does not authorize or approve any omission or deviation from applicable regulations. Final approval is subject to field inspection. One set of approved plans shall be available on the project site at all times.

DGS GENERAL SERVICES
Department of General Services
Architecture & Engineering Sections
State of California
Real Estate Services Division
Project Management & Development Branch
707 Third Street, Suite 4-105
West Sacramento, California 95605

LICENSED ARCHITECT
JEREMY K. KHOO
C-35651
REN. 05/31/23
STATE OF CALIFORNIA

DMV
State of California
Department of Motor Vehicles

Issue

No.	Date	Description
1	9/2/22	

Project
SANTA MARIA FIELD OFFICE REPLACEMENT

2770 SANTA MARIA WAY
SANTA MARIA, CA 93455
SANTA MARIA COUNTY

DEPT OF MOTOR VEHICLES

Supervisor	Designed	Drawn
MG	GP	JK

DSA App No.	SFM Permit No.
03-121324	21-S-0233-CP-ER

Sheet Title
ENLARGED FLOOR PLANS - RESTROOMS

Project Number
DGS000000140725

Sheet Scale

Sheet Number
A411

Copyright © 2020, California Department of General Services- Real Estate Services Division

C:\Projects\000000000140725_ARC_Project Master_22_Jeremy.Khoo58F93.rvt
7/12/2022 12:00:21 PM

RELATIVE BORDER SCALE IN INCHES

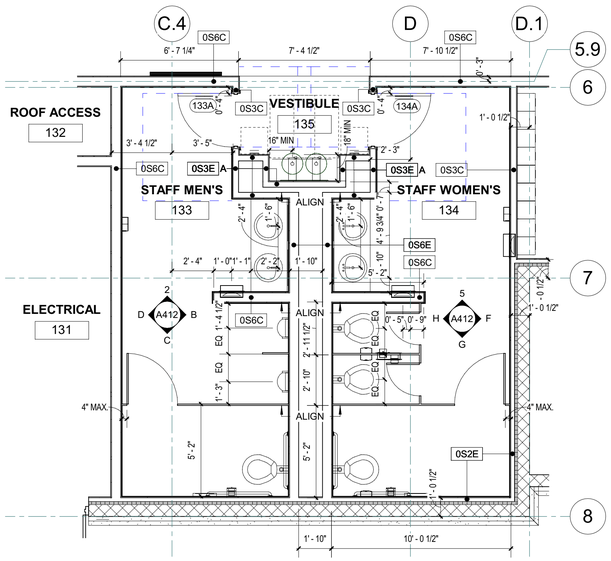

KEY PLAN

Keynote Legend	
Key Value	Keynote Text
RR 01	SOLID SURFACE COUNTER TOP
RR 02	2'x3' MIRROR
RR 03	ELECTRICAL HAND DRYER
RR 04	PAPER TOWEL DISPENSER
RR 06	CEILING HUNG TOILET PARTITIONS
RR 09	36" GRAB BARS
RR 10	42" GRAB BARS
RR 11	LAV, SEE 10/A502
RR 12	WALL HUNG URINAL
RR 13	WALL HUNG TOILET
RR 14	TOILET PAPER DISPENSER
RR 15	SANITARY NAPKIN DISPOSAL
RR 16	URINAL SCREEN
RR 21	SEAT COVER DISPENSER

GENERAL NOTES

1. ARCHITECTURAL DIMENSIONS ARE TO FACE OF STUDS/STRUCTURE OR CENTERLINE OF COLUMNS GRIDS, UNLESS NOTED OTHERWISE
2. LOCATE DOOR JAMBS 4" AWAY FROM ADJACENT WALLS UNLESS OTHERWISE DIMENSIONED.
3. ROOMS WITH FLOOR DRAINS (FD), SLOPE MAX 2% TO DRAIN
4. FOR TYPICAL BACKING/BLOCKING AT VARIOUS FIXTURES, ACCESSORIES, EQUIPMENT, CASEWORK,ETC.
5. INSTALL THERMAL INSULATION ON ALL EXTERIOR WALLS TO UNDERSIDE OF ROOF
6. FOR TOILET ACCESSORY MOUNTING HEIGHTS SEE 3 / A504
7. SEMI-RECESSED FIRE EXTINGUISHER CABINETS SEE 6 / A502 10 / A612

1 ENLARGED FLOOR PLAN - EMPLOYEE TOILETS

1/4" = 1'-0"

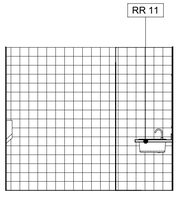

A-NORTH

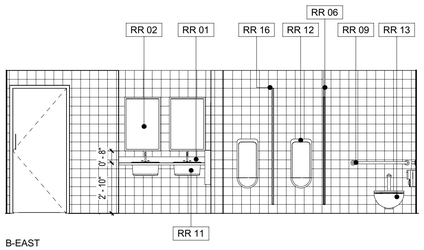

B-EAST

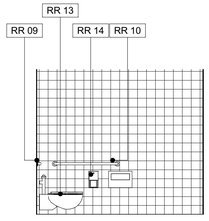

C-SOUTH

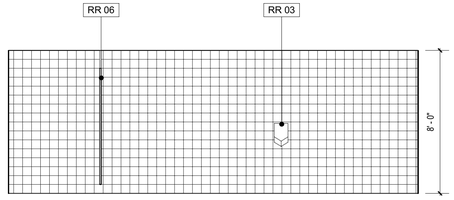

D-WEST

2 EMPLOYEE TOILET 133

1/4" = 1'-0"

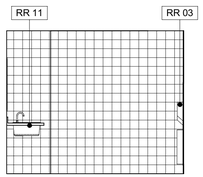

E - NORTH

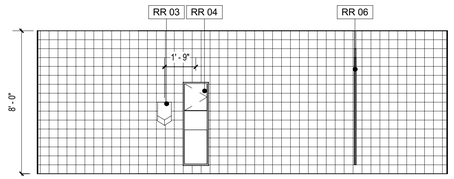

F - EAST

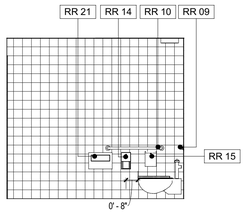

G - SOUTH

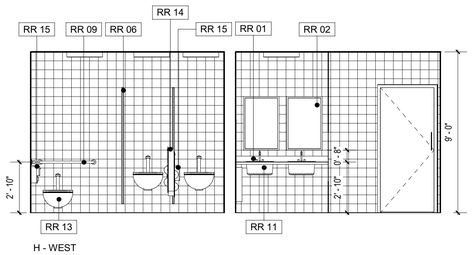

H - WEST

5 EMPLOYEE TOILET 134

1/4" = 1'-0"

IDENTIFICATION STAMP
DIV. OF THE STATE ARCHITECT
APP: 03-121324 INC:
REVIEWED FOR
SS ☐ FLS ☐ ACS ☑
DATE: 09/14/2022

OFFICE OF THE STATE FIRE MARSHAL
APPROVED FIRE AND PANIC ONLY
09/07/22
21-0233
Approval of this plan does not authorize or approve any omission or deviation from applicable regulations. Final approval is subject to field inspection. One set of approved plans shall be available on the project site at all times.

GENERAL SERVICES
Department of General Services
Architecture & Engineering Sections
State of California
Real Estate Services Division
Project Management & Development Branch
707 Third Street, Suite 4-105
West Sacramento, California 95605

LICENSED ARCHITECT
JEREMY K. KHOO
C-35651
REN. 05/31/23
STATE OF CALIFORNIA

DMV
State of California
Department of Motor Vehicles

Issue		
No.	Date	Description
	9/2/22	

Project
SANTA MARIA FIELD OFFICE REPLACEMENT

2770 SANTA MARIA WAY
SANTA MARIA, CA 93455
SANTA MARIA COUNTY

DEPT OF MOTOR VEHICLES

Supervisor	Designed	Drawn
MG	GP	JK

DSA App No.	SFM Permit No.
03-121324	21-S-0233-CP-ER

Sheet Title
ENLARGED FLOOR PLANS - RESTROOMS

Project Number
DGS000000140725

Sheet Scale

Sheet Number
A412

Copyright © 2020, California Department of General Services- Real Estate Services Division

C:\Projects\000000000140725_ARC_Project Master_22_Jeremy.Khoo58F93.rvt
7/12/2022 12:00:24 PM

RELATIVE BORDER SCALE IN INCHES

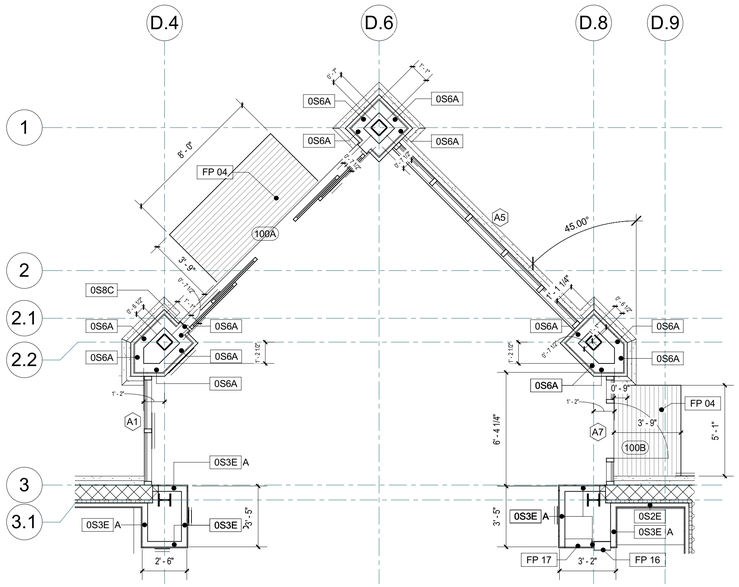

1 ENLARGED FLOOR PLAN - ENTRY

1/4" = 1'-0"

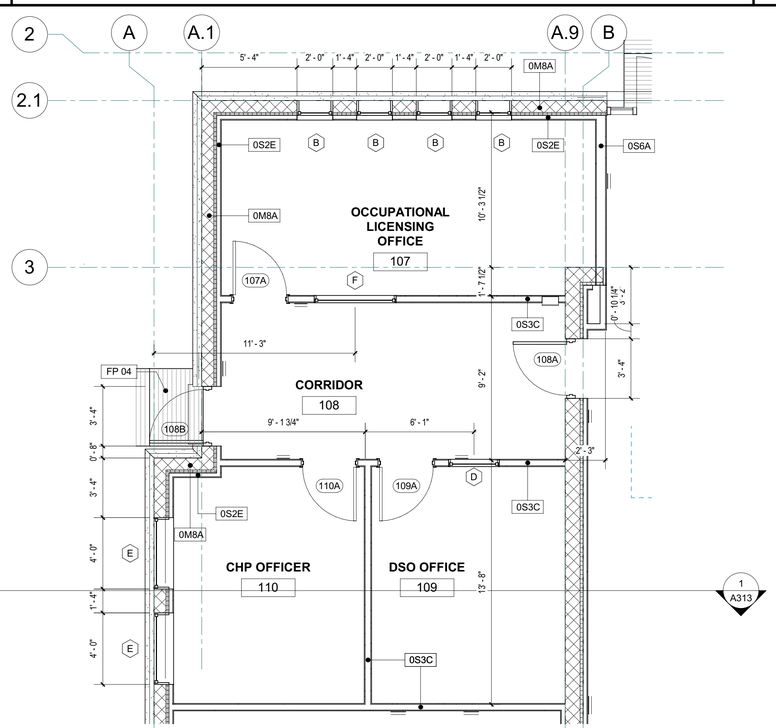

3 ENLARGED FLOOR PLAN - OFFICES

1/4" = 1'-0"

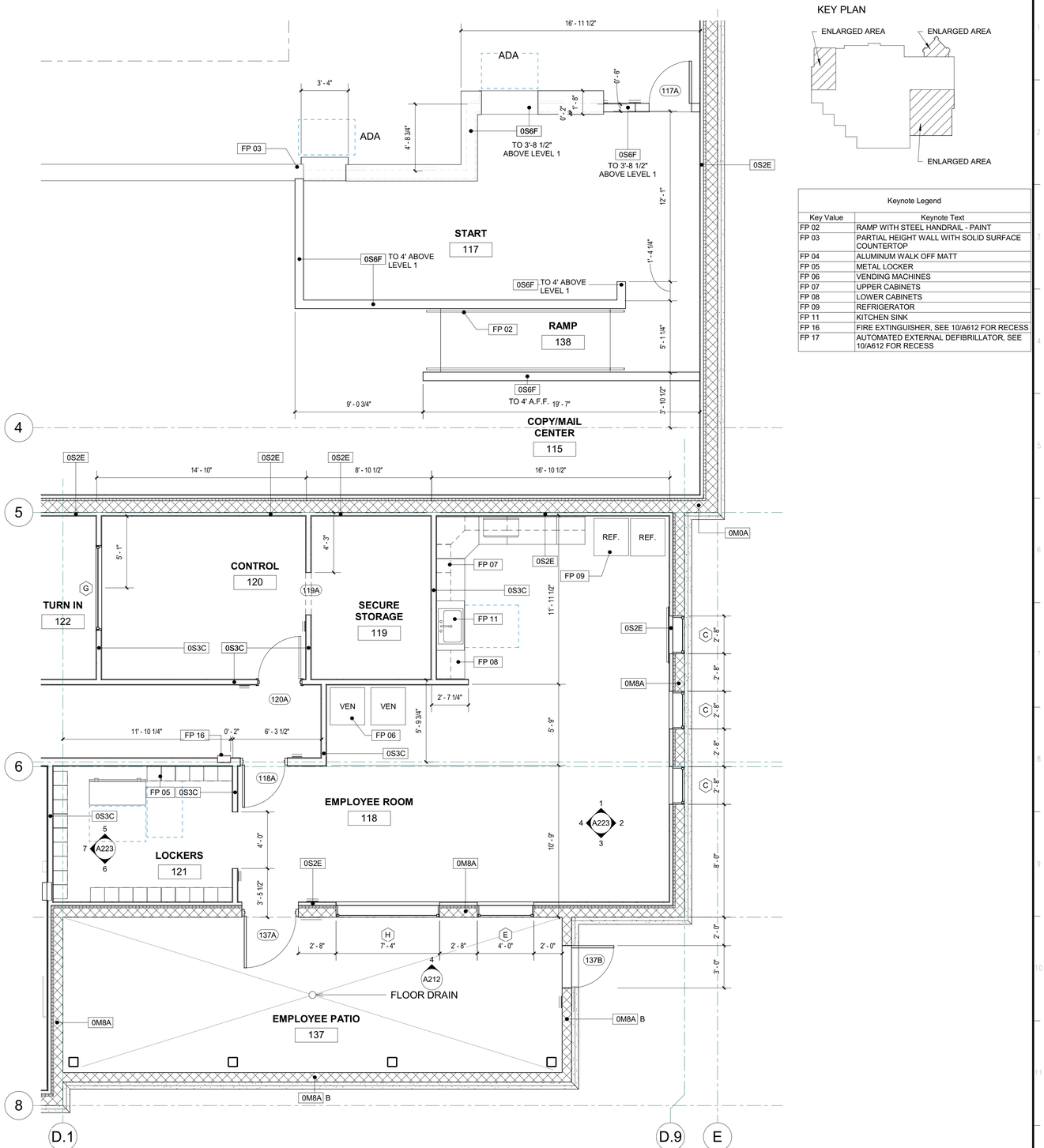

2 ENLARGED FLOOR PLAN - SOUTHEAST CORNER

1/4" = 1'-0"

KEY PLAN

Keynote Legend	
Key Value	Keynote Text
FP 02	RAMP WITH STEEL HANDRAIL - PAINT
FP 03	PARTIAL HEIGHT WALL WITH SOLID SURFACE COUNTERTOP
FP 04	ALUMINUM WALK OFF MATT
FP 05	METAL LOCKER
FP 06	VENDING MACHINES
FP 07	UPPER CABINETS
FP 08	LOWER CABINETS
FP 09	REFRIGERATOR
FP 11	KITCHEN SINK
FP 16	FIRE EXTINGUISHER, SEE 10/A612 FOR RECESS
FP 17	AUTOMATED EXTERNAL DEFIBRILLATOR, SEE 10/A612 FOR RECESS

IDENTIFICATION STAMP
DIV. OF THE STATE ARCHITECT
APP: 03-121324 INC:
REVIEWED FOR
SS ☐ FLS ☐ ACS ☑
DATE: 09/14/2022

OFFICE OF THE STATE FIRE MARSHAL
APPROVED FIRE AND PANIC ONLY
09/07/22
21-0233
Approval of this plan does not authorize or approve any omission or deviation from applicable regulations. Final approval is subject to field inspection. One set of approved plans shall be available on the project site at all times.

DGS GENERAL SERVICES
Department of General Services
Architecture & Engineering Sections
State of California
Real Estate Services Division
Project Management & Development Branch
707 Third Street, Suite 4-105
West Sacramento, California 95605

LICENSED ARCHITECT
JEREMY K. KHOO
C-35653
REN. 05/31/23
STATE OF CALIFORNIA

DMV
State of California
Department of Motor Vehicles

Issue		
No.	Date	Description
1	9/2/22	

Project
SANTA MARIA FIELD OFFICE REPLACEMENT
2770 SANTA MARIA WAY
SANTA MARIA, CA 93455
SANTA MARIA COUNTY

DEPT OF MOTOR VEHICLES

Supervisor	Designed	Drawn
MG	GP	JK

DSA App No.	SFM Permit No.
03-121324	21-S-0233-CP-ER

Sheet Title
ENLARGED FLOOR PLANS - VARIOUS

Project Number
DGS000000140725

Sheet Scale

Sheet Number
A413

Copyright © 2020, California Department of General Services - Real Estate Services Division

C:\Projects\000000000140725_ARC_Project Master_22_Jeremy.Khoo58F93.rvt
7/12/2022 12:00:31 PM
RELATIVE BORDER SCALE IN INCHES

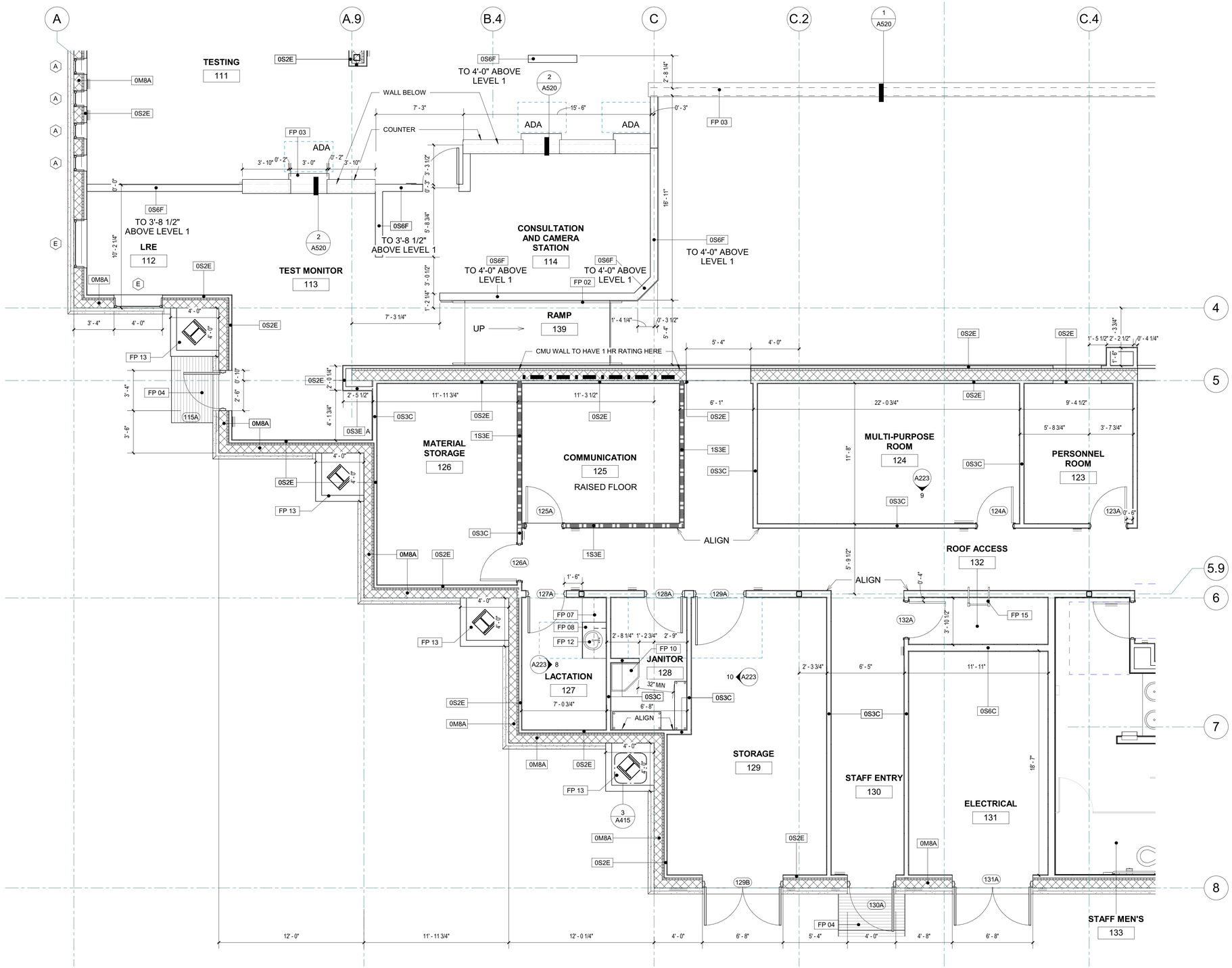

KEY PLAN

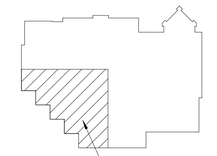

Keynote Legend	
Key Value	Keynote Text
FP 02	RAMP WITH STEEL HANDRAIL - PAINT
FP 03	PARTIAL HEIGHT WALL WITH SOLID SURFACE COUNTERTOP
FP 04	ALUMINUM WALK OFF MATT
FP 07	UPPER CABINETS
FP 08	LOWER CABINETS
FP 10	MOP SINK
FP 12	SINK
FP 13	RAISED CONCRETE BASE
FP 15	ACCESS ROOF LADDER

1 ENLARGED FLOOR PLAN - SOUTHWEST CORNER

1/4" = 1'-0"

IDENTIFICATION STAMP
DIV. OF THE STATE ARCHITECT
APP: 03-121324 INC:
REVIEWED FOR
SS ☐ FLS ☐ ACS ☑
DATE: 09/14/2022

OFFICE OF THE STATE FIRE MARSHAL
APPROVED FIRE AND PANIC ONLY
09/07/22
21-0233
Approval of this plan does not authorize or approve any omission or deviation from applicable regulations. Final approval is subject to field inspection. One set of approved plans shall be available on the project site at all times.

DGS GENERAL SERVICES
Department of General Services
Architecture & Engineering Sections
State of California
Real Estate Services Division
Project Management & Development Branch
707 Third Street, Suite 4-105
West Sacramento, California 95605

LICENSED ARCHITECT
JEREMY K. KHOO
C-35651
REN. 05/31/23
STATE OF CALIFORNIA

DMV
State of California
Department of Motor Vehicles

Issue		
No.	Date	Description
1	9/2/22	

Project
SANTA MARIA FIELD OFFICE REPLACEMENT
2770 SANTA MARIA WAY
SANTA MARIA, CA 93455
SANTA MARIA COUNTY

DEPT OF MOTOR VEHICLES

Supervisor	Designed	Drawn
MG	GP	JK

DSA App No.	SFM Permit No.
03-121324	21-S-0233-CP-ER

Sheet Title
ENLARGED FLOOR PLANS - SOUTHWEST CORNER

Project Number
DGS000000140725

Sheet Scale

Sheet Number
A414

Copyright © 2020, California Department of General Services - Real Estate Services Division

C:\Projects\000000000140725_ARC_Project Master_22_Jaremy Khoo58F93.rvt
7/12/2022 12:00:36 PM
RELATIVE BORDER SCALE IN INCHES

KEY PLAN

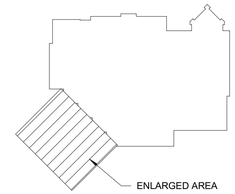

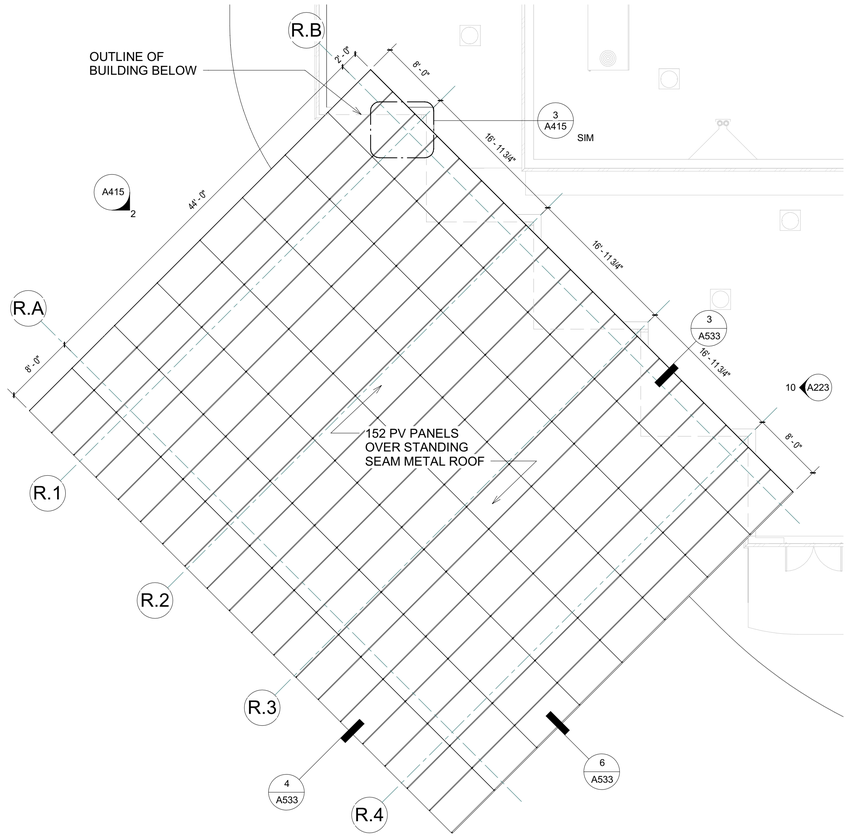

1 DRIVE CANOPY ROOF PLAN — 1/8" = 1'-0"

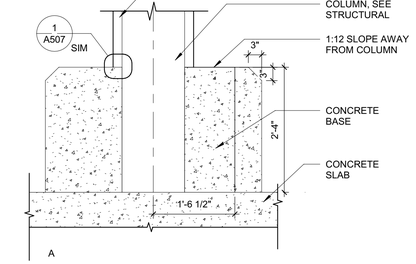

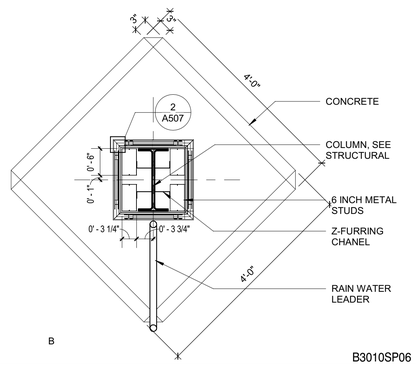

B3010SP06

3 DRIVE CANOPY DTL — 3/4" = 1'-0"

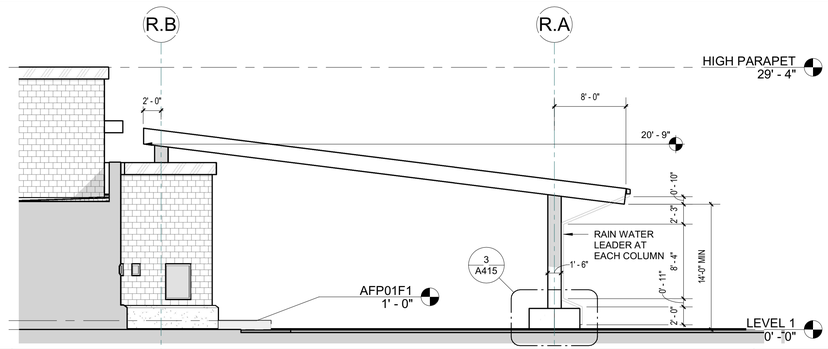

2 CANOPY ELEVATION — 1/8" = 1'-0"

IDENTIFICATION STAMP
DIV. OF THE STATE ARCHITECT
APP: 03-121324 INC:
REVIEWED FOR
SS ☐ FLS ☐ ACS ☑
DATE: 09/14/2022

OFFICE OF THE STATE FIRE MARSHAL
APPROVED FIRE AND PANIC ONLY
09/07/22
21-0233
Approval of this plan does not authorize or approve any omission or deviation from applicable regulations. Final approval is subject to field inspection. One set of approved plans shall be available on the project site at all times.

DGS GENERAL SERVICES
Department of General Services
Architecture & Engineering Sections
State of California
Real Estate Services Division
Project Management & Development Branch
707 Third Street, Suite 4-105
West Sacramento, California 95605

LICENSED ARCHITECT
JEREMY K. KHOO
C-35651
REN. 05/31/23
STATE OF CALIFORNIA

DMV
State of California
Department of Motor Vehicles

Issue		
No.	Date	Description
1	9/2/22	

Project
SANTA MARIA FIELD OFFICE REPLACEMENT

2770 SANTA MARIA WAY
SANTA MARIA, CA 93455
SANTA MARIA COUNTY

DEPT OF MOTOR VEHICLES

Supervisor	Designed	Drawn
MG	GP	JK

DSA App No.	SFM Permit No.
03-121324	21-S-0233-CP-ER

Sheet Title
DRIVE CANOPY PLAN

Project Number
DGS000000140725

Sheet Scale

Sheet Number
A415

© Copyright © 2020, California Department of General Services - Real Estate Services Division

C:\Projects\000000000000140725_ARC_Project Master_22_Jeremy.Khoo58F93.rvt
7/12/2022 12:00:39 PM

RELATIVE BORDER SCALE IN INCHES

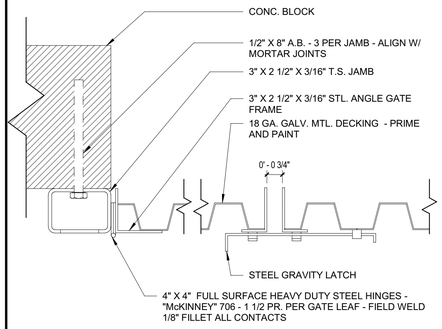

8 GATE JAMB AND LATCH — 3" = 1'-0"

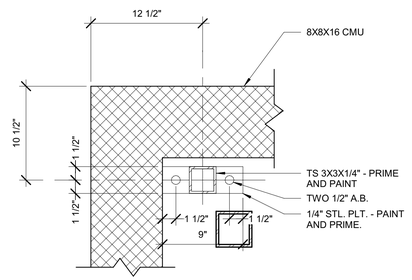

4 CANOPY COLUMN BASE — 1 1/2" = 1'-0"

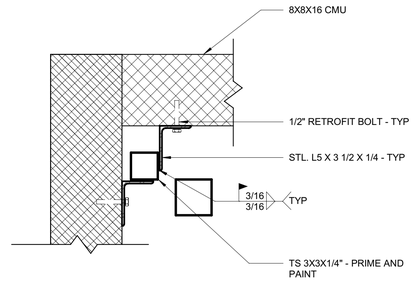

5 ANCHORAGE TO WALL — 1 1/2" = 1'-0"

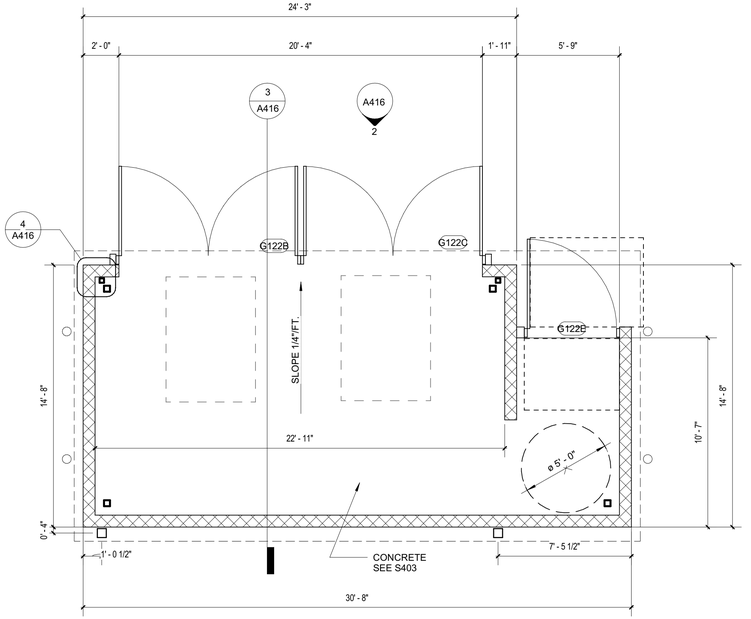

1 SITE - ENLARGED TRASH ENCLOSURE PLAN — 1/4" = 1'-0"

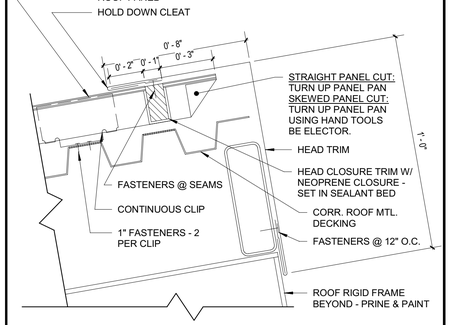

6 CANOPY HIGH EAVE — NOT TO SCALE

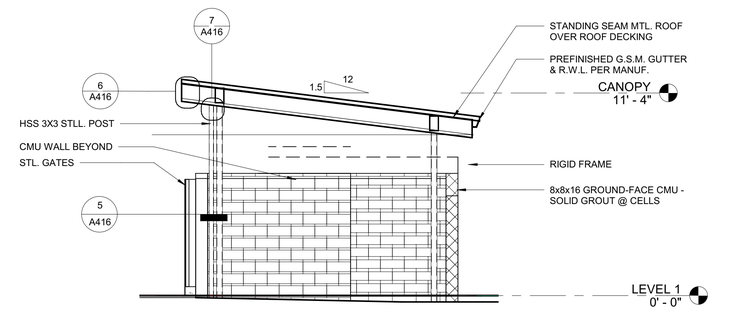

3 TRASH ENCLOSURE SECTION — 1/4" = 1'-0"

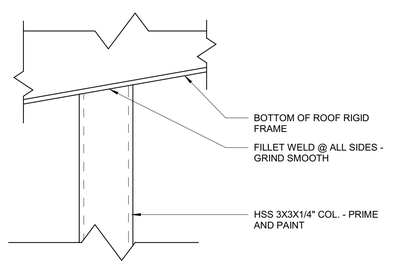

7 ROOF FRAMING CONCT — 3" = 1'-0"

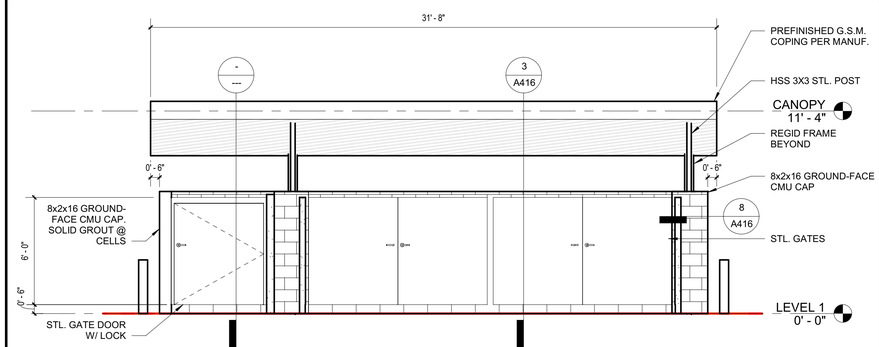

2 TRASH ENCLOSURE ELEVATION — 1/4" = 1'-0"

IDENTIFICATION STAMP
DIV. OF THE STATE ARCHITECT
APP: 03-121324 INC:
REVIEWED FOR
SS ☐ FLS ☐ ACS ☑
DATE: 09/14/2022

OFFICE OF THE STATE FIRE MARSHAL
APPROVED FIRE AND PANIC ONLY
09/07/22
21-0233
Approval of this plan does not authorize or approve any omission or deviation from applicable regulations. Final approval is subject to field inspection. One set of approved plans shall be available on the project site at all times.

DGS GENERAL SERVICES
Department of General Services
Architecture & Engineering Sections
State of California
Real Estate Services Division
Project Management & Development Branch
707 Third Street, Suite 4-105
West Sacramento, California 95605

LICENSED ARCHITECT
JEREMY K. KHOO
C-35651
REN. 05/31/23
STATE OF CALIFORNIA

DMV
State of California
Department of Motor Vehicles

Issue

No.	Date	Description
1	9/2/22	

Project
SANTA MARIA FIELD OFFICE REPLACEMENT

2770 SANTA MARIA WAY
SANTA MARIA, CA 93455
SANTA MARIA COUNTY

DEPT OF MOTOR VEHICLES

Supervisor	Designed	Drawn
MG	GP	JK

DSA App No.	SFM Permit No.
03-121324	21-S-0233-CP-ER

Sheet Title
TRASH ENCLOSURE PLAN

Project Number
DGS000000140725

Sheet Scale

Sheet Number
A416

Copyright © 2020, California Department of General Services - Real Estate Services Division

C:\Projects\000000000140725_ARC_Project Master_22_Jaremy Khoo58F93.rvt
7/12/2022 12:00:44 PM
24 x 36
RELATIVE BORDER SCALE IN INCHES
vs

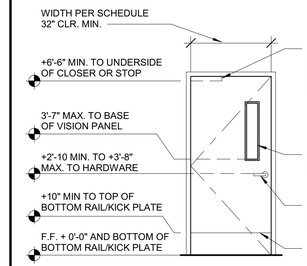

NOTE: THESE CLEARANCES APPLY TO ALL DOORS REQUIRED TO BE ACCESSIBLE TO PERSONS WITH DISABILITIES.

C1000AA01

1 DOOR ELEVATION — 3/8" = 1'-0"

NOTES:

1. THE DOOR OPERATOR SHALL BE ACTIVATED BY A KNOWING ACT.
2. DOORS SHALL OPEN FROM CLOSED TO BACK CHECK, OR 80° WHICHEVER OCCURS FIRST, IN 3 SECONDS OR LONGER AS REQUIRED BY TABLE 12 / A501
3. BACK CHECK SHALL NOT OCCUR BEFORE 60° OPENING.
4. TOTAL OPENING TIME TO 90° SHALL BE AS REQUIRED BY TABLE 2. IF THE DOOR OPENS MORE THAN 90°, IT SHALL CONTINUE AT THE SAME RATE AS BACK CHECK SPEED. SEE TABLE 2 12 / A501
5. WHEN POWERED OPEN, THE DOOR SHALL REMAIN AT THE FULLY OPEN POSITION FOR NOT LESS THAN 5 SECONDS. EXCEPTION: WHEN PUSH-PULL ACTIVATION IS USED, THE DOOR SHALL REMAIN AT THE FULLY OPEN POSITION FOR NOT LESS THAN 3 SECONDS.
6. DOORS SHALL CLOSE FROM 90° TO 10° IN 3 SECONDS OR LONGER AS REQUIRED BY TABLE 1. 12 / A501 DOORS SHALL CLOSE FROM 10° TO FULLY CLOSED IN NOT LESS THAN 1.5 SECONDS.
7. THE FORCE REQUIRED TO PREVENT A STOPPED DOOR FROM OPENING OR CLOSING SHALL NOT EXCEED 15 LBS MEASURED 1" FROM THE LATCH EDGE OF THE DOOR AT ANY POINT DURING OPENING OR CLOSING.
8. DOORS SHALL OPEN WITH A MANUAL FORCE NOT TO EXCEED 15 LBS TO RELEASE A LATCH, IF EQUIPPED WITH A LATCH, 30 LBS TO SET THE DOOR IN MOTION, AND 15 LBS. TO FULLY OPEN THE DOOR. THE FORCES SHALL BE APPLIED AT 1" FROM THE LATCH EDGE OF THE DOOR.
9. ALL LOW ENERGY DOORS SHALL BE MARKED WITH SIGNAGE VISIBLE FROM BOTH SIDES OF THE DOOR. ADDITIONALLY, ONE OR BOTH OF THE FOLLOWING MESSAGE SIGNS SHALL BE APPLIED. SEE 7 / A503 9.1. THE DOORS SHALL BE PROVIDED WITH SIGNS ON EACH SIDE OF THE DOOR WHERE THE SWITCH IS LOCATED, WITH THE MESSAGE, "ACTIVATE SWITCH TO OPERATE".
10. LOW ENERGY DOORS NOT CONNECTED TO BACK-UP POWER MUST PROVIDE MANEUVERING CLEARANCES. REFER TO 8 / A501

C1000AA10

10 LOW ENERGY DOORS — NOT TO SCALE

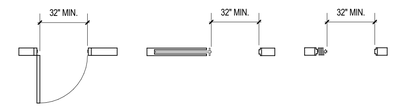

(A) HINGED DOOR (B) SLIDING DOOR (C) FOLDING DOOR

NOTE: THESE CLEARANCES APPLY TO ALL DOORS REQUIRED TO BE ACCESSIBLE TO PERSONS WITH DISABILITIES.

C1000AA06

6 DOORWAY WIDTH — 1/4" = 1'-0"

NOTES:

1. POWER ASSIST DOORS SHALL OPERATE ONLY BY PUSHING OR PULLING THE DOOR. AN ACTIVATING MEANS IS PERMITTED TO BE USED TO PUT THE DOOR IN THE POWER ASSIST MODE.
2. IF THE OPENING FORCE OF THE DOOR IS RELEASED, THE DOOR SHALL COME TO A STOP AND EITHER IMMEDIATELY BEGIN TO CLOSE OR BEGIN TO CLOSE AFTER A PREDETERMINED TIME.
3. NO TIME DELAY IS REQUIRED.
4. DOOR SHALL CLOSE FROM 90° TO 10° IN 3 SECONDS OR LONGER AS REQUIRED BY TABLE 1 IN 12 / A501
5. DOORS SHALL CLOSE FROM 10° TO FULLY CLOSED IN NOT LESS THAN 1.5 SECONDS
6. THE FORCE REQUIRED TO PREVENT A DOOR FROM CLOSING SHALL NOT EXCEED 15 LBS MEASURED 1" FROM THE LATCH EDGE OF THE DOOR AT ANY POINT DURING THE CLOSING CYCLE.
7. DOORS SHALL OPEN WITH A MANUAL FORCE NOT TO EXCEED 15 LBS TO RELEASE A LATCH, IF EQUIPPED WITH A LATCH, 30 LBS TO SET THE DOOR IN MOTION, AND 15 LBS TO FULLY OPEN THE DOOR. THE FORCES SHALL BE APPLIED AT 1" FROM THE LATCH EDGE OF THE DOOR.
8. ALL POWER ASSIST DOORS SHALL BE MARKED WITH SIGNAGE VISIBLE FROM BOTH SIDES OF THE DOOR. ADDITIONALLY, ONE OR BOTH OF THE FOLLOWING ACTIVATION MESSAGE SIGNS SHALL BE APPLIED PER 8.1. 7 / A503 WHEN A SEPARATE WALL SWITCH IS USED TO INITIATE POWER ASSIST, THE DOORS SHALL BE PROVIDED WITH SIGNS ON BOTH SIDES OF THE DOOR WITH THE MESSAGE "EASY OPEN DOOR - ACTIVATE SWITCH THEN OPEN DOOR". 8.2. 7 / A503 WHEN REMOTE DEVICES AND/OR PUSHING OR PULLING THE DOOR ARE USED TO INITIATE POWER ASSIST, THE DOORS SHALL BE PROVIDED WITH THE MESSAGE "EASY OPEN DOOR PUSH TO OPERATE" ON THE PUSH SIDE OF THE DOOR AND "EASY OPEN DOOR - PULL TO OPERATE" ON THE PULL SIDE OF THE DOOR.

C1000AA11

11 POWER ASSIST DOORS — NOT TO SCALE

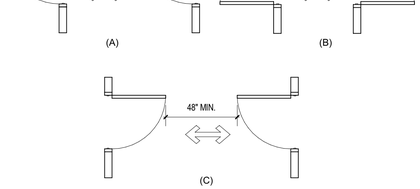

NOTE: THESE CLEARANCES APPLY TO ALL DOORS REQUIRED TO BE ACCESSIBLE TO PERSONS WITH DISABILITIES.

C1000AA07

7 DOORS IN SERIES — 1/4" = 1'-0"

NOTES:

1. THE FOLLOWING APPLY TO HARDWARE FOR MANUAL LOCKS AND PEDESTRIAN GATES ONLY.
2. HANDLES, PULLS, LATCHES, LOCKS AND OTHER OPERABLE PARTS ON DOORS AND GATES SHALL BE OPERABLE WITH ONE HAND AND SHALL NOT REQUIRE TIGHT GRASPING, PINCHING OR TWISTING OF THE WRIST. THE FORCE REQUIRED TO ACTIVATE OPERABLE PARTS SHALL NOT EXCEED 5 POUNDS MAX.
3. OPERABLE PARTS SHALL BE 34" MINIMUM AND 44" MAXIMUM ABOVE FINISHED FLOOR.
4. THE UNLATCHING OF ANY DOOR OR LEAF SHALL NOT REQUIRE MORE THAN ONE OPERATION.
5. DOOR CLOSERS SHALL BE ADJUSTED SO THAT FROM AN OPEN POSITION OF 90°,THE TIME REQUIRED TO MOVE THE DOOR TO A POSITION OF 12° FROM THE LATCH IS 5 SECONDS MIN.
6. DOOR SPRING HINGES SHALL BE ADJUSTED SO THAT FROM THE OPEN POSITION TO 70°, THE DOOR SHALL MOVE TO THE CLOSED POSITION IN 1.5 SECONDS MIN.
7. THE MAXIMUM FORCE FOR PUSHING OR PULLING A DOOR SHALL NOT EXCEED THE FOLLOWING:
   a. INTERIOR / EXTERIOR HINGED DOOR: 5 POUNDS
   b. SLIDING OR FOLDING DOORS: 5 POUNDS
   c. FIRE DOORS: 15 POUNDS

C1000AA02

2 HARDWARE — NOT TO SCALE

NOTES:

1. DOOR OPENINGS SHALL PROVIDE A CLEAR WIDTH OF 32" MINIMUM. CLEAR OPENINGS OF DOORWAYS WITH SWINGING DOORS SHALL BE MEASURED BETWEEN THE FACE OF THE DOOR AND THE STOP, WITH THE DOOR OPEN 90°. REFERRED TO 6 / A501
2. OPENINGS MORE THAN 24" DEEP SHALL PROVIDE A CLEAR OPENING OF 36" MINIMUM.
3. THERE SHALL BE NO PROJECTIONS INTO THE REQUIRED CLEAR OPENING LOWER THAN 34" ABOVE THE FINISH FLOOR OR GROUND.
4. PROJECTIONS INTO THE CLEAR OPENING WIDTH BETWEEN 34" AND 80" ABOVE THE FINISH FLOOR OR GROUND SHALL NOT EXCEED 4".
5. THE DISTANCE BETWEEN TWO HINGED OR PIVOTED DOORS IN A SERIES SHALL BE 48" MINIMUM PLUS THE WIDTH OF THE DOOR(S) SWINGING INTO THE SPACE. SEE 7 / A501
6. DOORS AND SIDE LIGHTS ADJACENT TO DOORS, CONTAINING ONE OR MORE GLAZING PANELS THAT PERMIT VIEWING THROUGH THE PANEL SHALL HAVE THE BOTTOM OF AT LEAST ONE GLAZED PANEL LOCATED 43" MAX. ABOVE THE FINISH FLOOR. SEE 1 / A501
7. ALL SWINGING DOORS SHALL BE PROVIDED WITH MANEUVERING CLEARANCES ON BOTH SIDES OF THE DOOR AS REQUIRED BY 8 / A501

C1000AA03

3 DOORS — NOT TO SCALE

TABLE 1					
MIN. OPENING TIME TO BACK CHECK OR 80°, WHICHEVER OCCURS FIRST; AND MIN. CLOSING TIME FROM 90° TO LATCH CHECK OR 10°, WHICHEVER OCCURS FIRST (SECONDS)					
DOOR LEAF WIDTH	DOOR WEIGHT				
	100 LBS	125 LBS	150 LBS	175 LBS	200 LBS
36"	3.0	3.5	3.5	4.0	4.0
42"	3.5	4.0	4.0	4.5	4.5
48"	4.0	4.5	4.5	5.0	5.5

TABLE 2		
TOTAL OPENING TIME TO 90°		
BACK CHECK AT 60°	BACK CHECK AT 70°	BACK CHECK AT 80°
TABLE 1 + 2 SECONDS	TABLE 1 + 1.5 SECONDS	TABLE 1 + 1 SECONDS
IF DOOR OPENS MORE THAN 90°, IT SHALL CONTINUE AT THE SAME RATE AS BACK CHECK SPEED.		

C1000AA12

12 POWER DOOR SPEEDS — NOT TO SCALE

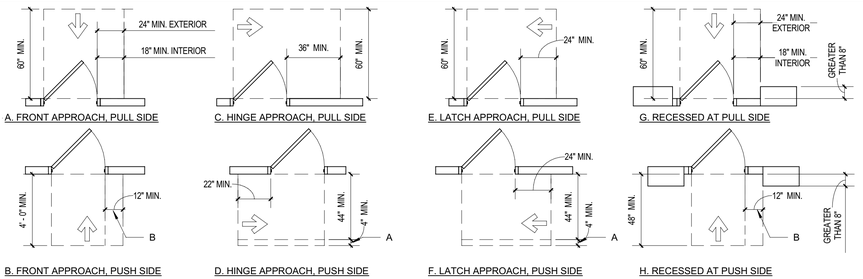

KEY NOTES:

A - 4" CLEARANCE, AS SHOWN, IS REQUIRED ONLY WHEN DOOR IS EQUIPPED WITH BOTH A LATCH AND CLOSER.
B - 12" CLEARANCE, AS SHOWN, IS REQUIRED ONLY WHEN DOOR IS EQUIPPED WITH BOTH A LATCH AND CLOSER.

GENERAL NOTE: THESE CLEARANCES APPLY TO ALL DOORS AND GATES REQUIRED TO BE ACCESSIBLE TO PERSONS WITH DISABILITIES EXCEPT AUTOMATIC DOORS AND GATES CONNECTED TO BACK UP POWER.

C1000AA08

8 MANEUVERING CLEARANCES AT SWINGING DOORS & GATES — 1/4" = 1'-0"

IDENTIFICATION STAMP
DIV. OF THE STATE ARCHITECT
APP: 03-121324 INC:
REVIEWED FOR
SS ☐ FLS ☐ ACS ☑
DATE: 09/14/2022

OFFICE OF THE STATE FIRE MARSHAL
APPROVED FIRE AND PANIC ONLY
09/07/22
21-0233

Approval of this plan does not authorize or approve any omission or deviation from applicable regulations. Final approval is subject to field inspection. One set of approved plans shall be available on the project site at all times.

DGS GENERAL SERVICES

Department of General Services
Architecture & Engineering Sections
State of California
Real Estate Services Division
Project Management & Development Branch

707 Third Street, Suite 4-105
West Sacramento, California 95605

LICENSED ARCHITECT
JEREMY K. KHOO
C-35651
REN. 05/31/23
STATE OF CALIFORNIA

DMV
State of California
Department of Motor Vehicles

Issue

No.	Date	Description
	9/2/22	

Project

SANTA MARIA FIELD OFFICE REPLACEMENT

2770 SANTA MARIA WAY
SANTA MARIA, CA 93455
SANTA MARIA COUNTY

DEPT OF MOTOR VEHICLES

Supervisor	Designed	Drawn
MG	GP	JK

DSA App No. 03-121324
SFM Permit No. 21-S-0233-CP-ER

Sheet Title
ACCESSIBLE DOOR AND VERTICAL CIRCULATION DETAILS

Project Number
DGS000000140725

Sheet Scale

Sheet Number
A501

© Copyright © 2020, California Department of General Services - Real Estate Services Division

C:\Projects\000000000140725_ARC_Project Master_22_Jeremy.Khoo08F93.rvt
7/12/2022 12:00:47 PM

RELATIVE BORDER SCALE IN INCHES

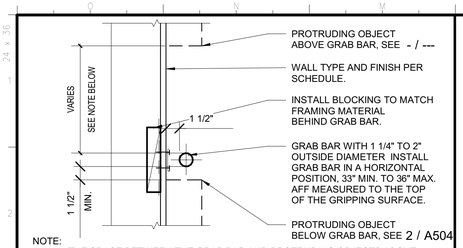

NOTE:

- THE SPACE BETWEEN THE GRAB BAR AND PROTRUDING OBJECTS ABOVE SHALL BE 12" MIN. EXCEPT THAT THE SPACE MAY BE REDUCED TO 1 1/2" MIN. BETWEEN THE GRAB BAR AND SHOWER CONTROLS, SHOWER FITTINGS AND OTHER GRAB BARS ABOVE.
- ALLOWABLE STRESSES SHALL NOT BE EXCEEDED FOR MATERIALS USED WHEN A VERTICAL OR HORIZONTAL FORCE OF 250 LBS. IS APPLIED AT ANY POINT ON THE GRAB BAR, FASTENER, MOUNTING DEVICE, OR SUPPORT STRUCTURE.
- SPACE BETWEEN GRAB BAR AND ACCESSORY MUST BE 1 1/2". ACCESSORY TO BE FLUSH TO ADJACENT SURFACE, SEE 16 / A502

C1000AA39

17 GRAB BAR SECTION — 1 1/2" = 1'-0"

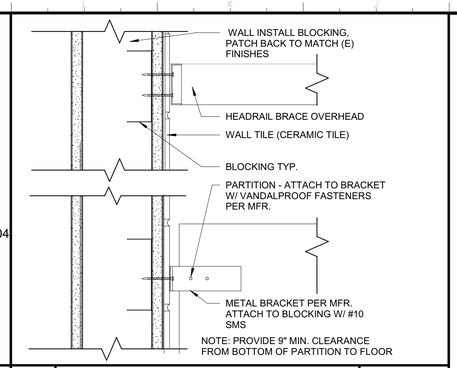

13 PARTITION ANCHORAGE — 3" = 1'-0"

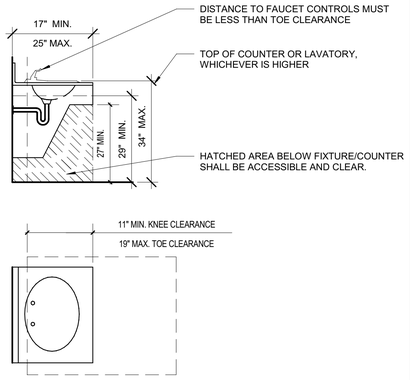

NOTES:

- SINK DEPTH SHALL BE 6 1/2" MAXIMUM.
- FAUCET CONTROLS SHALL BE OPERABLE WITH ONE HAND AND SHALL NOT REQUIRE TIGHT GRASPING, PINCHING, OR TWISTING OF THE WRIST.
- THE FORCE REQUIRED TO ACTIVATE CONTROLS SHALL NOT REQUIRE MORE THAN 5 LBS. OF FORCE TO OPERATE.
- PUSH TYPE, LEVER OPERATED AND ELECTRONICALLY CONTROLLED MECHANISMS ARE ACCEPTABLE.
- SELF CLOSING VALVES ARE ALLOWED IF THE FAUCET VALVE REMAINS OPEN FOR AT LEAST 10 SECONDS.
- EXPOSED WATER SUPPLY AND DRAIN PIPES SHALL BE INSULATED OR OTHERWISE COVERED. THERE SHALL BE NO SHARP OR ABRASIVE SURFACES UNDER LAVATORIES.
- KNEE AND TOE CLEARANCE SHALL BE PROVIDED. REFER TO 9 A504
- THE DIP IN THE OVERFLOW SHALL NOT BE CONSIDERED IN DETERMINING THE KNEE AND TOE CLEARANCE.

C1000AA30

10 LAVATORY — 1/2" = 1'-0"

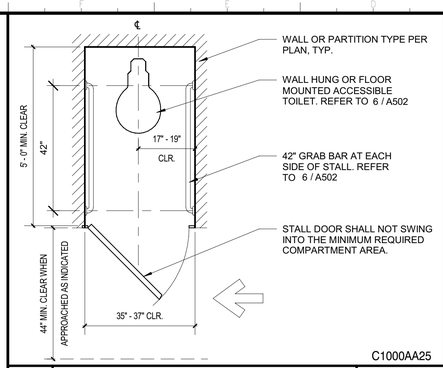

C1000AA25

5 AMBULATORY TOILET — 1/2" = 1'-0"

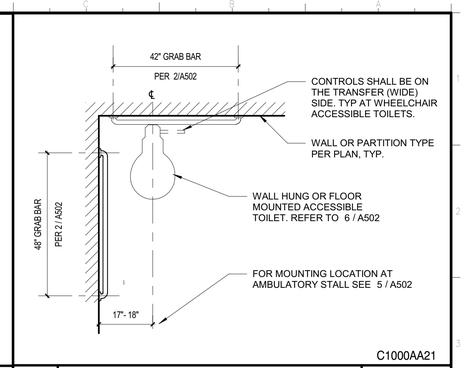

C1000AA21

1 TOILET PLAN — 1/2" = 1'-0"

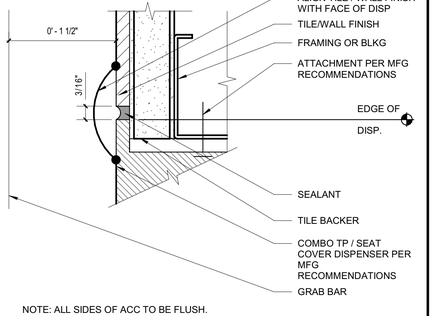

NOTE: ALL SIDES OF ACC TO BE FLUSH.

C1000AA40

18 ACC @ TILE — 12" = 1'-0"

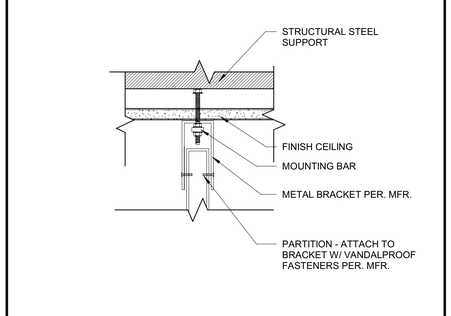

14 CEILING HUNG PARTITION — 3" = 1'-0"

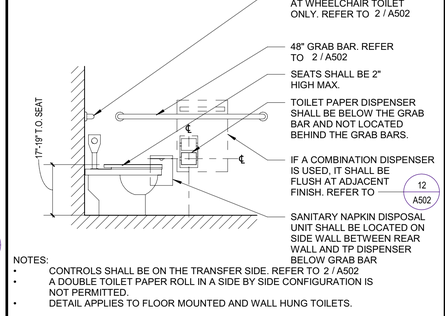

NOTES:

- CONTROLS SHALL BE ON THE TRANSFER SIDE. REFER TO 2 / A502
- A DOUBLE TOILET PAPER ROLL IN A SIDE BY SIDE CONFIGURATION IS NOT PERMITTED.
- DETAIL APPLIES TO FLOOR MOUNTED AND WALL HUNG TOILETS.

C1000AA26

6 TOILET AND ACCS — 1/2" = 1'-0"

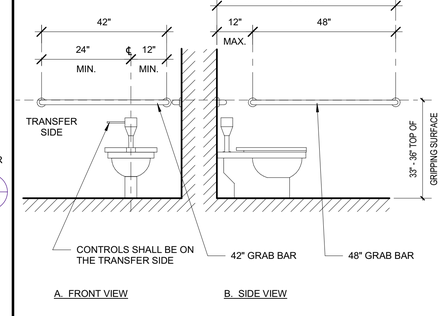

C1000AA22

2 GRAB BARS ELEV — 1/2" = 1'-0"

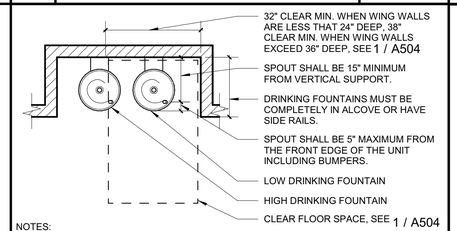

NOTES:

- THE FLOW OF WATER SHALL BE ACTIVATED BY MANUALLY OPERATED SYSTEM THAT IS FRONT OR SIDE MOUNTED WITHIN 6" OF THE FRONT EDGE OF THE FIXTURE OR BY AN AUTOMATIC CONTROL DEVICE.
- THE SPOUT SHALL PROVIDE A FLOW OF WATER 4" HIGH MINIMUM.
- THE ANGLE OF THE WATER STREAM SHALL BE MEASURED HORIZONTALLY RELATIVE TO THE FRONT FACE OF THE UNIT.
- WHERE SPOUTS ARE LOCATED LESS THAN 3" FROM THE FRONT OF THE UNIT, THE ANGLE OF THE WATER STREAM SHALL BE 30 DEG. MAX.
- WHERE SPOUTS ARE LOCATED BETWEEN 3" AND 5" MAX. FROM THE FRONT OF THE UNIT, THE ANGLE OF THE WATER STREAM SHALL BE 15 DEG. MAX.

C1000AA35

15 DRINKING FOUNTAIN — 1/2" = 1'-0"

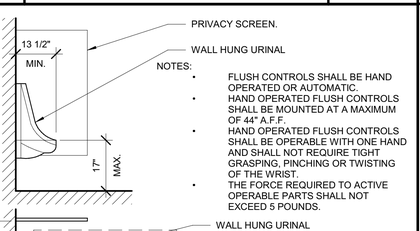

C1000AA31

11 URINAL — 1/2" = 1'-0"

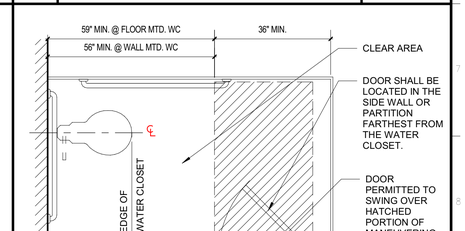

A. IN-SWINGING DOOR

A. IN-SWINGING DOOR

B. OUT-SWINGING DOOR

MANEUVERING SPACE WITH END OPENING DOOR

B. OUT-SWINGING DOOR

MANEUVERING SPACE WITH SIDE OPENING DOOR

C1000AA24

8 STD STALL (FRONT) — 1/2" = 1'-0"

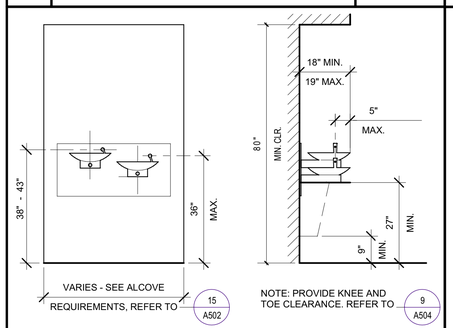

A. FRONT VIEW — B. SECTION VIEW

C1000AA36

16 DRINKING FOUNTAIN — 1/2" = 1'-0"

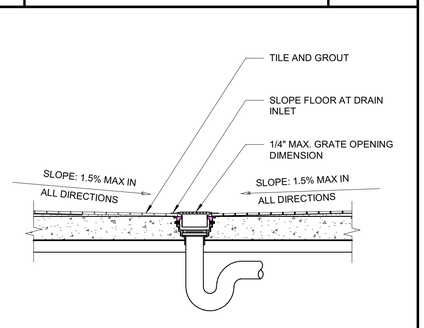

C1000AA32

12 FLOOR DRAIN — 1" = 1'-0"

4 STD STALL (SIDE) — 1/2" = 1'-0"

IDENTIFICATION STAMP
DIV. OF THE STATE ARCHITECT
APP: 03-121324 INC:
REVIEWED FOR
SS ☐ FLS ☐ ACS ☑
DATE: 09/14/2022

OFFICE OF THE STATE FIRE MARSHAL
APPROVED FIRE AND PANIC ONLY
09/07/22
21-0233
Approval of this plan does not authorize or approve any omission or deviation from applicable regulations. Final approval is subject to field inspection. One set of approved plans shall be available on the project site at all times.

DGS GENERAL SERVICES
Department of General Services
Architecture & Engineering Sections
State of California
Real Estate Services Division
Project Management & Development Branch
707 Third Street, Suite 4-105
West Sacramento, California 95605

LICENSED ARCHITECT
JEREMY K. KHOO
C-35651
REN. 05/31/23
STATE OF CALIFORNIA

DMV
State of California
Department of Motor Vehicles

Issue

No.	Date	Description
1	9/2/22	

Project
SANTA MARIA FIELD OFFICE REPLACEMENT
2770 SANTA MARIA WAY
SANTA MARIA, CA 93455
SANTA MARIA COUNTY
DEPT OF MOTOR VEHICLES

Supervisor	Designed	Drawn
MG	GP	JK

DSA App No. 03-121324
SFM Permit No. 21-S-0233-CP-ER
Sheet Title: ACCESSIBLE STANDARD DETAILS
Project Number: DGS000000140725
Sheet Scale
Sheet Number: A502

Copyright © 2020, California Department of General Services - Real Estate Services Division

C:\Projects\000000000140725_ARC_Project Master_22_Jeremy.Khoo58F93.rvt
7/12/2022 12:00:52 PM

RELATIVE BORDER SCALE IN INCHES

ITEM	MEASUREMENT	CHARACTER FEATURE
A	DOT BASE DIAMETER	0.059"-0.063"
B	DISTANCE BETWEEN TWO DOTS IN THE SAME CELL (MEASURED CENTER TO CENTER)	0.100"
C	DISTANCE BETWEEN CORRESPONDING DOTS IN ADJACENT CELLS (MEASURED CENTER TO CENTER)	0.300"
D	DOT HEIGHT (RAISED)	0.025"-0.037"
E	DISTANCE BETWEEN CORRESPONDING DOTS FROM CELL DIRECTLY BELOW (MEASURED CENTER TO CENTER)	0.395"-0.400"

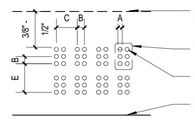

NOTES:

- DOT PATTERNS SHOWN ON SIGN DETAILS ARE NOT REPRESENTATIVE OF FINAL GRADE 2 BRAILLE. CONTRACTOR TO VERIFY ACCURACY OF ALL CHARACTERS.
- GRADE 2 BRAILLE SHALL BE POSITIONED BELOW THE CORRESPONDING TEXT IN A HORIZONTAL FORMAT, FLUSH LEFT OR CENTERED. IF TEXT IS MULTI-LINED, BRAILLE SHALL BE PLACED BELOW THE ENTIRE TEXT (E.G. ALL BRAILLE CHARACTERS SHALL BE PLACED TOGETHER AND NOT SEPARATE BY ADDITIONAL LINES OF RAISED TEXT).
- THE INDICATION OF A SINGLE UPPERCASE LETTER SHALL ONLY BE USED BEFORE PROPER NOUNS AND NAMES; BEFORE INDIVIDUAL LETTERS OF THE ALPHABET; BEFORE THE FIRST WORD OF SENTENCES.
- THE INDICATION OF MULTIPLE UPPERCASE LETTERS SHALL ONLY BE USED BEFORE INITIALS AND ACRONYMS.
- BRAILLE SHALL BE SEPARATED 3/8" MIN. FROM RAISED BORDERS AND DECORATIVE ELEMENTS.
- BRAILLE SHALL BE UNIFIED ENGLISH BRAILLE (UEB) CONTRACTED (GRADE 2 BRAILLE).
- ALL BRAILLE SHALL BE REVIEWED AND APPROVED BY A CERTIFIED BRAILLE TRANSCRIBER PRIOR TO STATES APPROVAL. A COPY OF THE

INSPECTION: TRANSCRIBERS CERTIFICATION SHALL ACCOMPANY THE MEMO OF ACCEPTANCE.

1. SIGNS AND IDENTIFICATION DEVICES SHALL BE FIELD INSPECTED AFTER INSTALLATION AND APPROVED BY THE ENFORCING AGENCY PRIOR TO THE ISSUANCE OF A FINAL CERTIFICATE OF OCCUPANCY, OR FINAL APPROVAL WHERE NO CERTIFICATE OF OCCUPANCY IS ISSUED. THE INSPECTION SHALL INCLUDE, BUT NOT BE LIMITED TO, VERIFICATION THAT BRAILLE DOTS AND CELLS ARE PROPERLY SPACED AND THE SIZE, PROPORTION AND TYPE OF RAISED CHARACTERS ARE IN COMPLIANCE WITH THESE REGULATIONS.

C1000AA54

14 GRADE 2 BRAILLE — 12" = 1'-0"

HEIGHT TO FINISH FLOOR OR GROUND FROM BASELINE OF HIGHEST CHARACTER	HORIZONTAL VIEWING DISTANCE	MINIMUM CHARACTER HEIGHT
40" TO LESS THAN OR EQUAL TO 70"	LESS THAN 72"	5/8"
	72" AND GREATER	5/8" PLUS 1/8" PER FOOT OF VIEWING DISTANCE GREATER THAN 72".
GREATER THAN 70" TO LESS THAN OR EQUAL TO 120"	LESS THAN 180"	2"
	180" AND GREATER	2" PLUS 1/8" PER FOOT OF VIEWING DISTANCE GREATER THAN 180".
GREATER THAN 120"	LESS THAN 21'	3"
	21'-0" AND GREATER	3" PLUS 1/8" PER FOOT OF VIEWING DISTANCE GREATER THAN 21'.

C1000AA55

15 VISUAL CHARACTERS — NOT TO SCALE

ITEM	CHARACTER FEATURE	MEASUREMENT
A	HEIGHT	MINIMUM CHARACTER HEIGHT SHALL BE AS REQUIRED BY BASED ON HEIGHT OF UPPERCASE "I". 15 / A503
B	PROPORTION	WIDTH OF UPPERCASE "O" SHALL BE 60% MIN. TO 110% MAX. OF HEIGHT OF UPPERCASE "I".
C	STROKE THICKNESS	STROKE THICKNESS OF UPPERCASE "I" SHALL BE 10% MIN. TO 20% MAX. OF CHARACTER HEIGHT.
D	CHARACTER SPACING	SPACING BETWEEN INDIVIDUAL CHARACTERS SHALL BE 10% MIN. TO 35% MAX. OF CHARACTER HEIGHT.
E	LINE SPACING	SPACING BETWEEN BASELINES OF SEPARATE LINES SHALL BE 135% MIN. TO 170% MAX. OF CHARACTER HEIGHT.

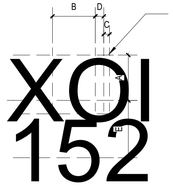

NOTES:

- VISUAL TEXT SHALL NOT BE ACCOMPANIED BY GRADE 2 BRAILLE.
- CHARACTERS AND THEIR BACKGROUND SHALL HAVE A NON-GLARE FINISH. CHARACTERS SHALL CONTRAST WITH THEIR BACKGROUND WITH EITHER LIGHT CHARACTERS ON DARK BACKGROUND OR DARK CHARACTERS ON LIGHT BACKGROUND.
- CHARACTERS MAY BE UPPERCASE, LOWER CASE OR A COMBINATION OF BOTH.
- CHARACTERS SHALL BE CONVENTIONAL IN FORM: CHARACTERS SHALL NOT BE ITALIC, OBLIQUE, SCRIPT, HIGHLY DECORATIVE, OR OF OTHER UNUSUAL FORMS.

C1000AA50

10 VISUAL TEXT — 12" = 1'-0"

ITEM	CHARACTER FEATURE	MEASUREMENT
A	HEIGHT	5/8" MIN. TO 2" MAX. BASED ON HEIGHT OF UPPERCASE "I".
B	PROPORTION	WIDTH OF UPPERCASE "O" SHALL BE 60% MIN. TO 110% MAX. OF HEIGHT OF UPPERCASE "I".
C	STROKE THICKNESS	STROKE THICKNESS OF UPPERCASE "I" SHALL BE 15% MAXIMUM OF CHARACTER HEIGHT.
D	CHARACTER SPACING	SPACING BETWEEN CHARACTERS WITH RECTANGULAR CROSS SECTIONS: 1/8" MIN. TO 4 TIMES STROKE WIDTH MAX. SPACING BETWEEN CHARACTERS WITH NON-RECTILINEAR CROSS SECTIONS: 1/16" MIN. TO 4 TIMES STROKE WIDTH MAX. AT BASE OF THE CROSS SECTIONS, AND 1/8" MIN. TO 4 TIMES STROKE WIDTH MAX. AT TOP OF THE CROSS SECTIONS.
E	LINE SPACING	SPACING BETWEEN BASELINES OF SEPARATE LINES SHALL BE 135% MIN. TO 170% MAX. OF CHARACTER HEIGHT.
F	RAISED BORDERS	CHARACTERS SHALL BE SEPARATED FROM RAISED BORDERS AND DECORATIVE ELEMENTS 3/8" MIN.

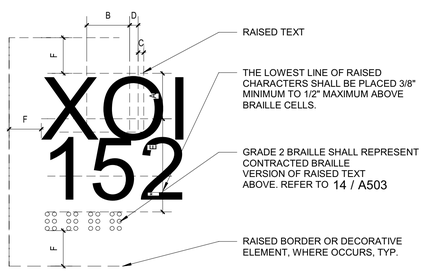

NOTES:

- CHARACTERS SHALL BE RAISED 1/32" MIN. USING UPPERCASE SANS SERIF FONT.
- RAISED TEXT SHALL ALWAYS BE ACCOMPANIED BY GRADE 2 BRAILLE - SEE. CHARACTERS SHALL BE SEPARATED 3/8" MIN. FROM RAISED SIGN BORDERS OR OTHER ELEMENTS. REFER TO 14 / A503

C1000AA52

12 RAISED TEXT — 12" = 1'-0"

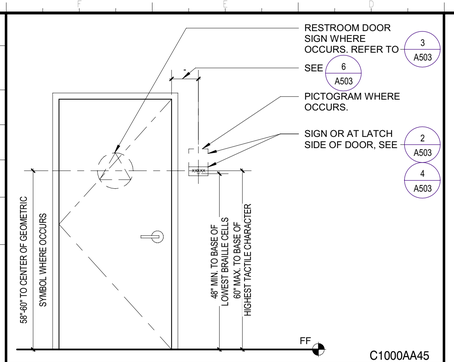

C1000AA45

5 SIGN ELEVATION — 1/2" = 1'-0"

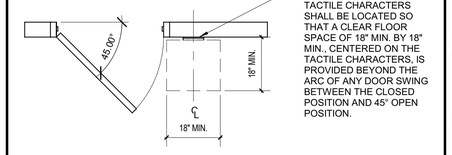

NOTES:

- WHERE A SIGN IS PROVIDED AT A DOOR, THE SIGN SHALL BE LOCATED ALONGSIDE THE DOOR AT THE LATCH SIDE.
- WHERE A TACTILE SIGN IS PROVIDED AT DOUBLE DOORS WITH ONE ACTIVE LEAF, THE SIGN SHALL BE LOCATED ON THE INACTIVE LEAF.
- WHERE A TACTILE SIGN IS LOCATED AT DOUBLE DOORS WITH TWO ACTIVE LEAFS, THE SIGN SHALL BE LOCATED TO THE RIGHT OF THE RIGHT HAND DOOR.
- WHERE THERE IS NO WALL SPACE AT THE LATCH SIDE OF A SINGLE DOOR OR AT THE RIGHT SIDE OF DOUBLE DOORS, THE SIGN SHALL BE LOCATED ON THE NEAREST ADJACENT WALL.

C1000AA46

6 SIGN PLAN — 1/2" = 1'-0"

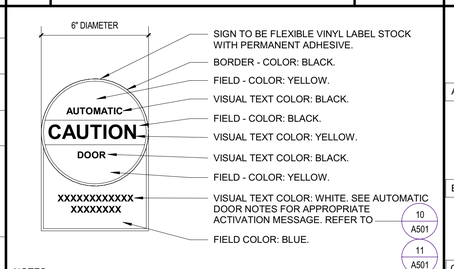

NOTES:

- ALL VISUAL TEXT SHALL BE PER DETAIL.
- INSTALL ONE SIGN ON EACH SIDE OF EACH DOOR. INSTALL ONE SIGN AT EACH SIDE OF EACH LEAF AT DOUBLE DOORS.
- SIGN SHALL BE MOUNTED 50" +/- 12" FROM THE FLOOR TO THE CENTERLINE OF THE SIGN.

C1000AA60

7 POWER DOORS — 3" = 1'-0"

NOTES:

- CHARACTERS AND SYMBOLS SHALL CONTRAST WITH THEIR BACKGROUND EITHER LIGHT CHARACTERS ON A DARK BACKGROUND OR DARK CHARACTERS ON A LIGHT BACKGROUND.
- SIGN, CHARACTERS, AND THEIR FINISH SHALL HAVE NON-GLARE FIN

C1000AA48

8 ASSISTIVE LISTENING — 3" = 1'-0"

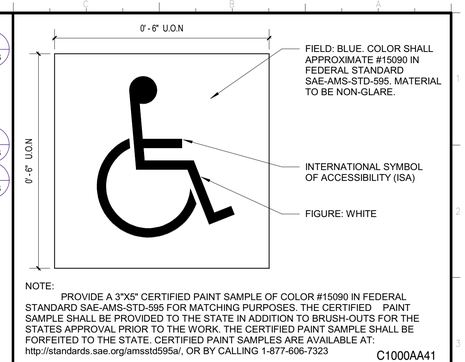

NOTE:

PROVIDE A 3"X5" CERTIFIED PAINT SAMPLE OF COLOR #15090 IN FEDERAL STANDARD SAE-AMS-STD-595 FOR MATCHING PURPOSES. THE CERTIFIED PAINT SAMPLE SHALL BE PROVIDED TO THE STATE IN ADDITION TO BRUSH-OUTS FOR THE STATES APPROVAL PRIOR TO THE WORK. THE CERTIFIED PAINT SAMPLE SHALL BE FORFEITED TO THE STATE. CERTIFIED PAINT SAMPLES ARE AVAILABLE AT: http://standards.sae.org/amsstd595a/, OR BY CALLING 1-877-606-7323

C1000AA41

1 ACCESSIBILITY SYMBOL — 6" = 1'-0"

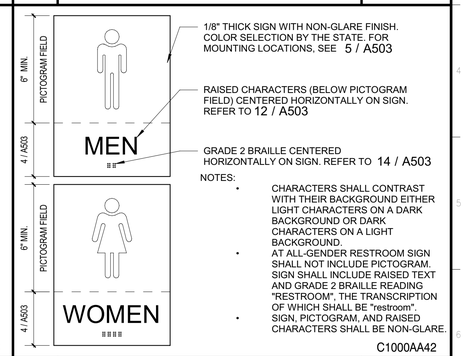

NOTES:

- CHARACTERS SHALL CONTRAST WITH THEIR BACKGROUND EITHER LIGHT CHARACTERS ON A DARK BACKGROUND OR DARK CHARACTERS ON A LIGHT BACKGROUND.
- AT ALL-GENDER RESTROOM SIGN SHALL NOT INCLUDE PICTOGRAM. SIGN SHALL INCLUDE RAISED TEXT AND GRADE 2 BRAILLE READING "RESTROOM", THE TRANSCRIPTION OF WHICH SHALL BE "restroom".
- SIGN, PICTOGRAM, AND RAISED CHARACTERS SHALL BE NON-GLARE.

C1000AA42

2 PICTOGRAMS — 3" = 1'-0"

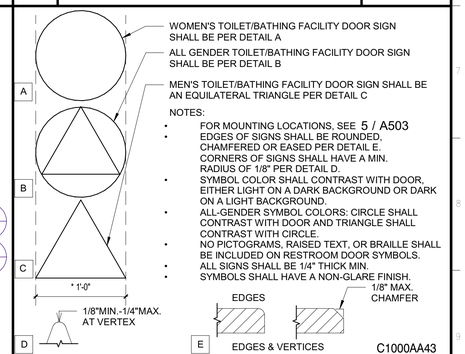

NOTES:

- FOR MOUNTING LOCATIONS, SEE 5 / A503
- EDGES OF SIGNS SHALL BE ROUNDED, CHAMFERED OR EASED PER DETAIL E. CORNERS OF SIGNS SHALL HAVE A MIN. RADIUS OF 1/8" PER DETAIL D.
- SYMBOL COLOR SHALL CONTRAST WITH DOOR, EITHER LIGHT ON A DARK BACKGROUND OR DARK ON A LIGHT BACKGROUND.
- ALL-GENDER SYMBOL COLORS: CIRCLE SHALL CONTRAST WITH DOOR AND TRIANGLE SHALL CONTRAST WITH CIRCLE.
- NO PICTOGRAMS, RAISED TEXT, OR BRAILLE SHALL BE INCLUDED ON RESTROOM DOOR SYMBOLS.
- ALL SIGNS SHALL BE 1/4" THICK MIN.
- SYMBOLS SHALL HAVE A NON-GLARE FINISH.

C1000AA43

3 RESTROOM DOOR — NOT TO SCALE

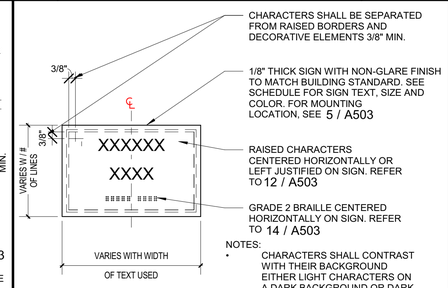

NOTES:

- CHARACTERS SHALL CONTRAST WITH THEIR BACKGROUND EITHER LIGHT CHARACTERS ON A DARK BACKGROUND OR DARK CHARACTERS ON A LIGHT BACKGROUND.
- SIGN, CHARACTERS, AND THEIR FINISH SHALL HAVE NON-GLARE FINISH.

C1000AA44

4 ROOM AND EGRESS — 3" = 1'-0"

RELATIVE BORDER SCALE IN INCHES

IDENTIFICATION STAMP
DIV. OF THE STATE ARCHITECT
APP: 03-121324 INC:
REVIEWED FOR
SS ☐ FLS ☐ ACS ☑
DATE: 09/14/2022

OFFICE OF THE STATE FIRE MARSHAL
APPROVED FIRE AND PANIC ONLY
09/07/22
21-0233
Approval of this plan does not authorize or approve any omission or deviation from applicable regulations. Final approval is subject to field inspection. One set of approved plans shall be available on the project site at all times.

DGS GENERAL SERVICES

Department of General Services
Architecture & Engineering Sections
State of California
Real Estate Services Division
Project Management & Development Branch
707 Third Street, Suite 4-105
West Sacramento, California 95605

LICENSED ARCHITECT
JEREMY K. KHOO
C-35651
REN. 05/31/23
STATE OF CALIFORNIA

DMV
State of California
Department of Motor Vehicles

Issue

No.	Date	Description
	9/2/22	

Project
SANTA MARIA FIELD OFFICE REPLACEMENT
2770 SANTA MARIA WAY
SANTA MARIA, CA 93455
SANTA MARIA COUNTY

DEPT OF MOTOR VEHICLES

Supervisor	Designed	Drawn
MG	GP	JK

DSA App No. 03-121324
SFM Permit No. 21-S-0233-CP-ER

Sheet Title
ACCESSIBLE SIGN DETAILS

Project Number
DGS000000140725

Sheet Scale
Sheet Number
A503

Copyright © 2020, California Department of General Services- Real Estate Services Division

C:\Projects\000000000140725_ARC_Project Master_22_Jeremy.Khoo58F93.rvt
7/12/2022 12:00:55 PM

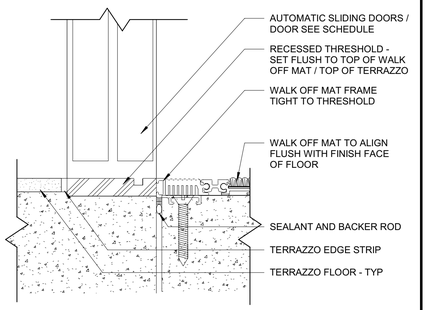

8 ENTRY MAT THRESHOLD — 6" = 1'-0"

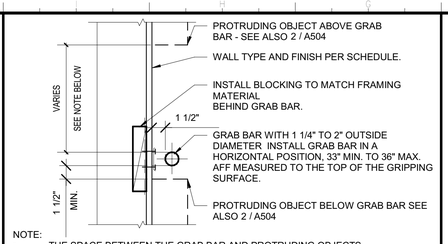

NOTE:
- THE SPACE BETWEEN THE GRAB BAR AND PROTRUDING OBJECTS ABOVE SHALL BE 12" MIN. EXCEPT THAT THE SPACE MAY BE REDUCED TO 1 1/2" MIN. BETWEEN THE GRAB BAR AND SHOWER CONTROLS, SHOWER FITTINGS AND OTHER GRAB BARS ABOVE.
- ALLOWABLE STRESSES SHALL NOT BE EXCEEDED FOR MATERIALS USED WHEN A VERTICAL OR HORIZONTAL FORCE OF 250 LBS. IS APPLIED AT ANY POINT ON THE GRAB BAR, FASTENER, MOUNTING DEVICE, OR SUPPORT STRUCTURE.

A10_GB_01

4 GRAB BAR SECTION — 1 1/2" = 1'-0"

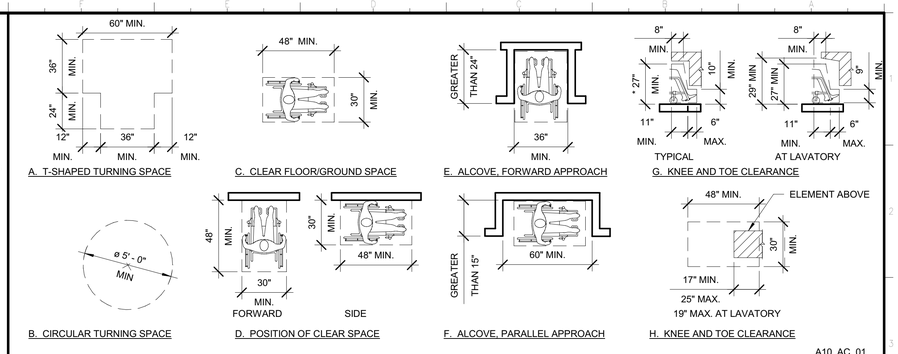

A10_AC_01

1 ACCESSIBLE MANEUVERING AND CLEAR SPACES — 1/4" = 1'-0"

DIMENSION NOTES:

1. ALL DIMENSIONS SHOWS ON SHEETS A501 THROUGH A508 ARE TO FACE OF FINISH UNLESS NOTED TO A CENTERLINE.
2. DIMENSIONS THAT ARE STATED AS "MAXIMUM" OR MINIMUM ARE ABSOLUTE.
3. ALL DIMENSIONS ARE SUBJECT TO CONVENTIONAL INDUSTRY TOLERANCES EXCEPT WHERE THE REQUIREMENT STATES A RANGE WITH SPECIFIC MINIMUM AND MAXIMUM END POINTS.
4. ALL CONVENTIONAL INDUSTRY TOLERANCES SHALL BE SUBJECT TO APPROVAL BY THE STATE.

4.1 WHERE THE REQUIREMENT STATE A SPECIFIC RANGE, THE RANGE PROVIDES AN ADEQUATE TOLERANCE AND THEREFORE NO TOLERANCE OUTSIDE OF THE RANGE AT EITHER END POINT IS PERMITTED.

4.2 CONVENTIONAL INDUSTRY STANDARDS INCLUDE THOSE FOR FIELD CONDITIONS AND THOSE THAT MAY BE NECESSARY CONSEQUENCE OF A PARTICULAR MANUFACTURING PROCESS.

4.3 INFORMATION ON SPECIFIC TOLERANCES MAY BE AVAILABLE FROM INDUSTRY OR TRADE ORGANIZATIONS, CODE GROUPS AND PUBLISHED REFERENCES.

4.4 USE OF TOLERANCES IN THIS PROJECT SHALL BE SUPPORTED BY DOCUMENTATION FROM ONE OF THESE RECOGNIZED SOURCES.

A01_AC_05

9 DIMENSION NOTES — 1/2" = 1'-0"

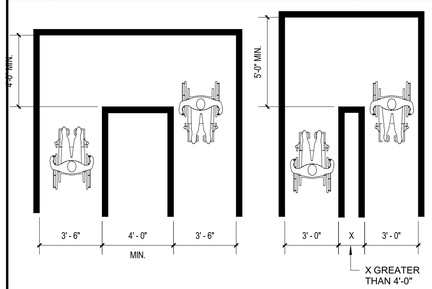

A10_AC_06

10 CLEAR WIDTH AT TURNS — 1/4" = 1'-0"

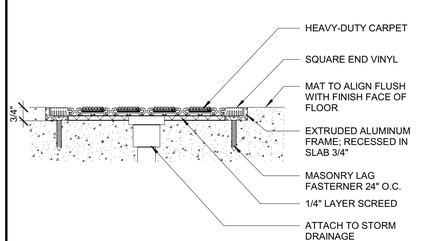

11 ENTRY MAT — 3" = 1'-0"

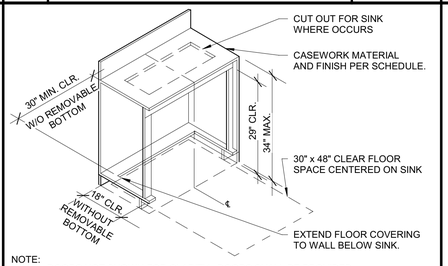

NOTE:
- DOORS NOT SHOWN FOR CLARITY. DOORS SHALL BE PROVIDED.
- INTERIOR SURFACES OF ACCESSIBLE CABINET SHALL MATCH EXTERIOR FINISH.
- INSTALL RESILIENT BASE AT INTERIOR CABINET SIDE PANELS AND BACK TO MATCH ROOM.
- SEE ALSO 5 / ---.4.

A06_CW_01

5 LAVATORY CASEWORK — 1/2" = 1'-0"

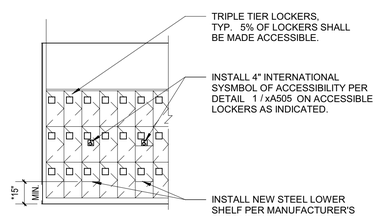

NOTES:
- CENTER 30" x 48" CLEAR FLOOR AREA ON CENTERLINE OF EACH ACCESSIBLE LOCKER.
- ACCESSIBLE LOCKERS SHALL ALL BE LOCATED IN THE LOWER TIER.

A10_LC_01

6 LOCKER ELEVATION — 1/4" = 1'-0"

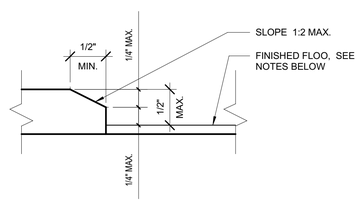

NOTE: CARPETS, WHERE OCCURS, SHALL HAVE 1/2" MAX. PILE THICKNESS.

A01_AC_03

7 FLOOR LEVEL CHANGE — 12" = 1'-0"

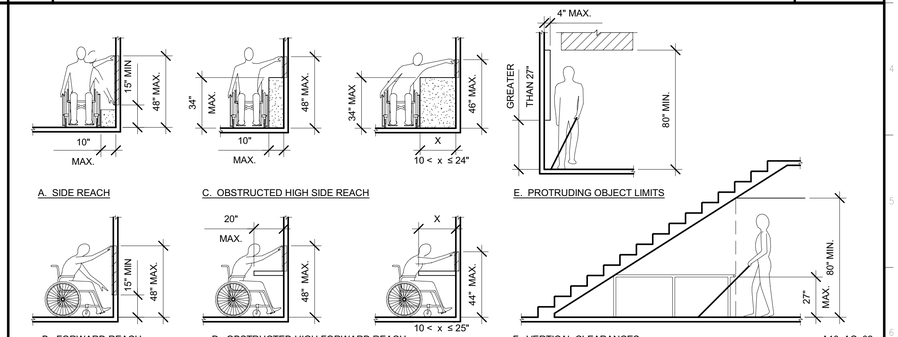

A10_AC_02

2 ACCESSIBLE REACH RANGES AND VERTICAL CLEARNCES — 1/4" = 1'-0"

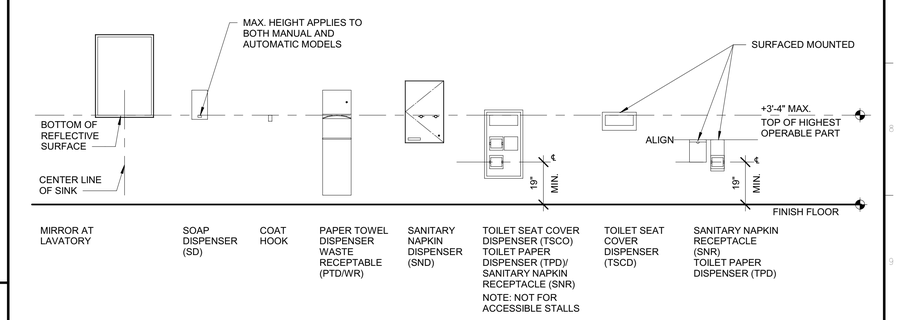

NOTE: WHERE TOWEL DISPENSERS, SANITARY NAPKIN DISPENSERS, WASTE RECEPTACLES AND OTHER ACCESSORIES PROVIDED IN RESTROOM FACILITIES AT LEAST ONE EACH TYPE SHALL BE LOCATED ON ACCESSIBLE ROUTE. ALL OPERABLE PARTS INCLUDING COIN SLOTS SHALL BE 40" MAX. ABOVE FINISH FLOOR.

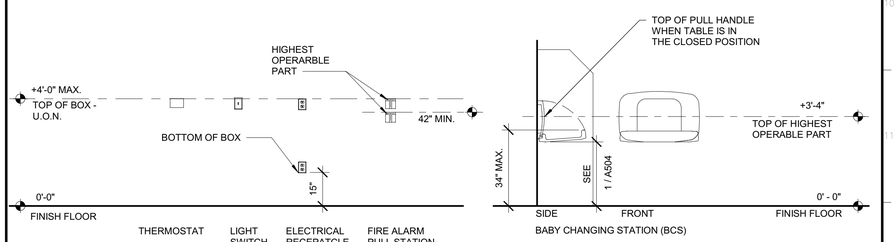

A10_MH_01

3 TYPICAL MOUNTING HEIGHTS — 3/8" = 1'-0"

IDENTIFICATION STAMP
DIV. OF THE STATE ARCHITECT
APP: 03-121324 INC:
REVIEWED FOR
SS ☐ FLS ☐ ACS ☑
DATE: 09/14/2022

OFFICE OF THE STATE FIRE MARSHAL
APPROVED FIRE AND PANIC ONLY
09/07/22
21-0233
Approval of this plan does not authorize or approve any omission or deviation from applicable regulations. Final approval is subject to field inspection. One set of approved plans shall be available on the project site at all times.

GENERAL SERVICES
Department of General Services
Architecture & Engineering Sections
State of California
Real Estate Services Division
Project Management & Development Branch
707 Third Street, Suite 4-105
West Sacramento, California 95605

LICENSED ARCHITECT
JEREMY K. KHOO
C-35651
REN. 05/31/23
STATE OF CALIFORNIA

DMV
State of California
Department of Motor Vehicles

Issue

No.	Date	Description
1	9/2/22	

Project
SANTA MARIA FIELD OFFICE REPLACEMENT
2770 SANTA MARIA WAY
SANTA MARIA, CA 93455
SANTA MARIA COUNTY

DEPT OF MOTOR VEHICLES

Supervisor	Designed	Drawn
MG	GP	JK

DSA App No. 03-121324
SFM Permit No. 21-S-0233-CP-ER

Sheet Title
MISCELLANEOUS TYPICAL DETAILS

Project Number
DGS000000140725

Sheet Scale

Sheet Number
A504

Copyright © 2020, California Department of General Services, Real Estate Services Division

C:\Projects\000000000140725_ARC_Project Master_22_Jeremy.Khoo\58F93.rvt
7/12/2022 12:00:57 PM
RELATIVE BORDER SCALE IN INCHES

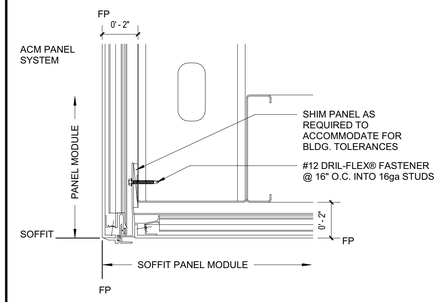

9 PANEL TRANSITION — 3" = 1'-0"

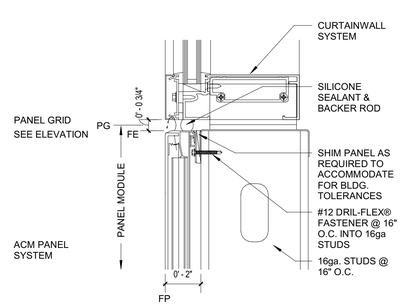

5 PANEL WINDOW SILL — 3" = 1'-0"

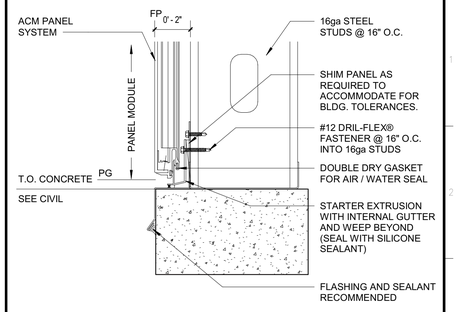

1 METAL PANEL SILL — 3" = 1'-0"

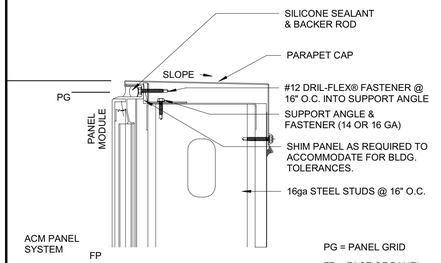

10 PANEL PARAPET — 3" = 1'-0"

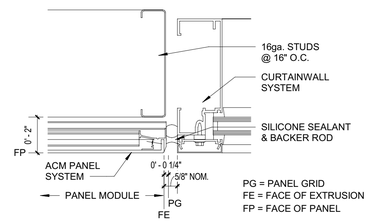

6 PANEL WINDOW JAMB — 3" = 1'-0"

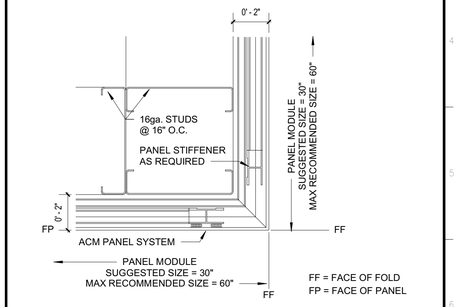

2 PANEL OUTSIDE CORNER — 3" = 1'-0"

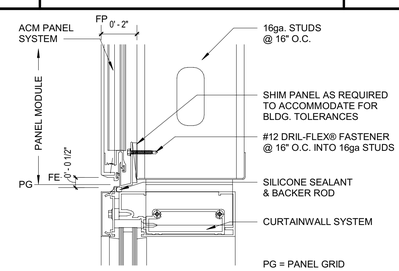

7 PANEL WINDOW HEAD — 3" = 1'-0"

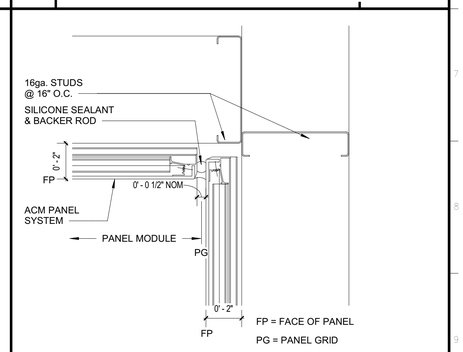

3 PANEL INSIDE CORNER — 3" = 1'-0"

8 PANEL VERTICAL JOINT — 3" = 1'-0"

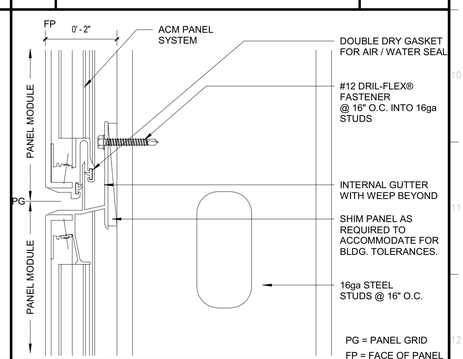

4 PANEL HORIZONTAL JOINT — 6" = 1'-0"

IDENTIFICATION STAMP
DIV. OF THE STATE ARCHITECT
APP: 03-121324 INC:
REVIEWED FOR
SS ☐ FLS ☐ ACS ☑
DATE: 09/14/2022

OFFICE OF THE STATE FIRE MARSHAL
APPROVED FIRE AND PANIC ONLY
09/07/22
21-0233
Approval of this plan does not authorize or approve any omission or deviation from applicable regulations. Final approval is subject to field inspection. One set of approved plans shall be available on the project site at all times.

DGS GENERAL SERVICES
Department of General Services
Architecture & Engineering Sections
State of California
Real Estate Services Division
Project Management & Development Branch
707 Third Street, Suite 4-105
West Sacramento, California 95605

LICENSED ARCHITECT
JEREMY K. KHOO
C-35853
REN. 05/31/23
STATE OF CALIFORNIA

DMV
State of California
Department of Motor Vehicles

Issue

No.	Date	Description
1	9/2/22	

Project
SANTA MARIA FIELD OFFICE REPLACEMENT
2770 SANTA MARIA WAY
SANTA MARIA, CA 93455
SANTA MARIA COUNTY

DEPT OF MOTOR VEHICLES

Supervisor	Designed	Drawn
MG	GP	JK

DSA App No. 03-121324
SFM Permit No. 21-S-0233-CP-ER

Sheet Title
PANEL SYSTEM DETAILS

Project Number
DGS000000140725

Sheet Scale
Sheet Number
A507

Copyright © 2020, California Department of General Services - Real Estate Services Division

7/12/2022 12:01:00 PM C:\Projects\000000000140725_ARC_Project Master_22_Jeremy.Khoo58F93.rvt

RELATIVE BORDER SCALE IN INCHES

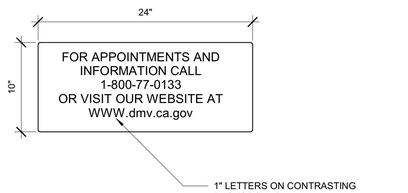

15 APPOINTMENTS — 1 1/2" = 1'-0"

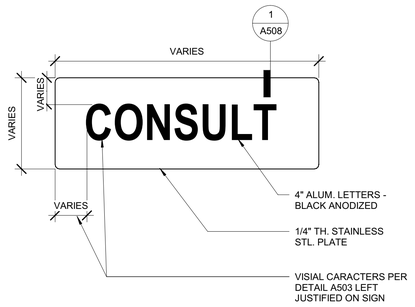

16 TYPE-C — 3" = 1'-0"

17 START HERE — 3" = 1'-0"

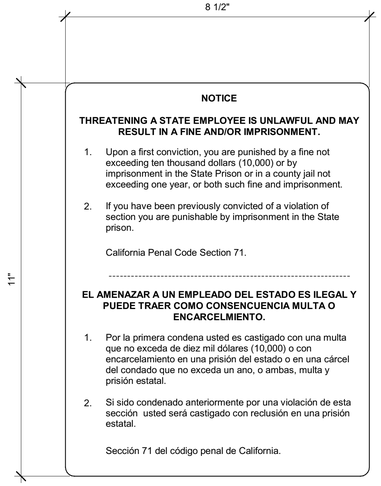

13 NOTICE OF THREAT — 6" = 1'-0"

14 CCTV — 3" = 1'-0"

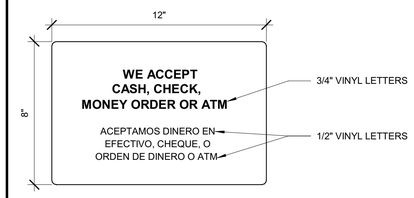

9 CURRENCY ACCEPT. — 3" = 1'-0"

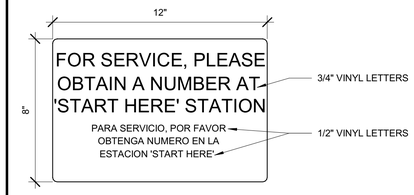

10 FOR SERVICE — 3" = 1'-0"

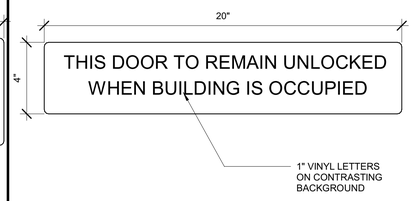

11 DOOR UNLOCKED — 3" = 1'-0"

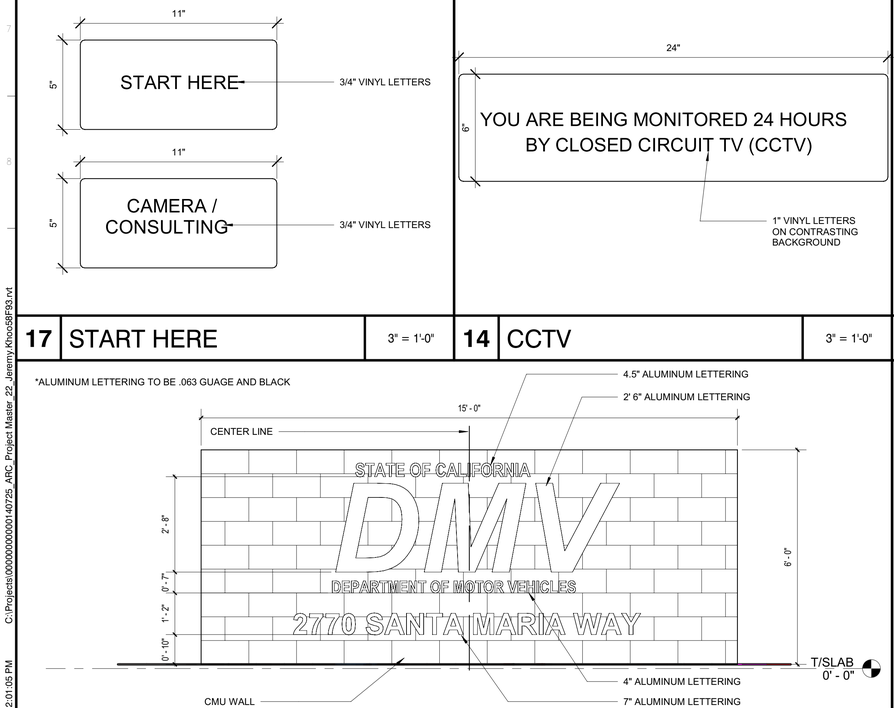

18 MONUMENT SIGN — 1/2" = 1'-0"

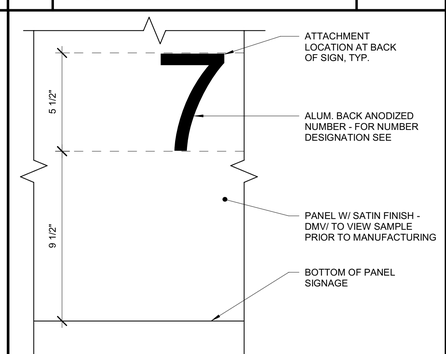

12 STATION NUMBER (1-14) — 3" = 1'-0"

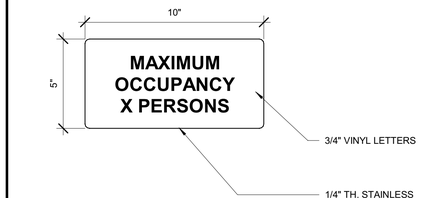

5 MAX. OCCUPANCY — 3" = 1'-0"

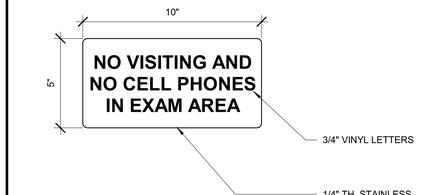

6 NO VISITING — 3" = 1'-0"

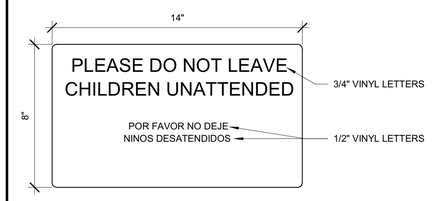

7 UNATTENDED — 3" = 1'-0"

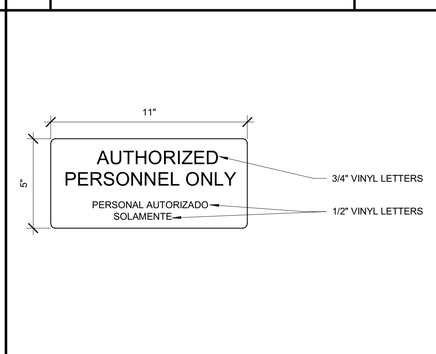

8 AUTH. PERSONNEL ONLY — 3" = 1'-0"

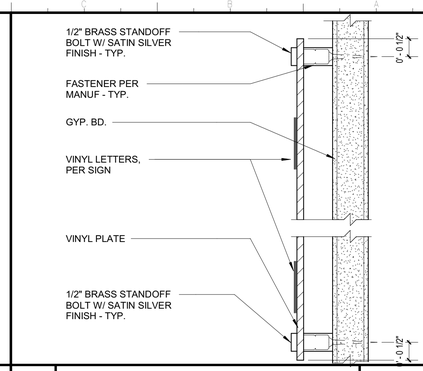

1 WALL INT. SIGN — 6" = 1'-0"

2 NO FOOD AND DRINKS — 3" = 1'-0"

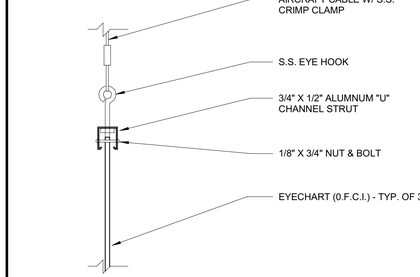

3 MOUNTING — 3" = 1'-0"

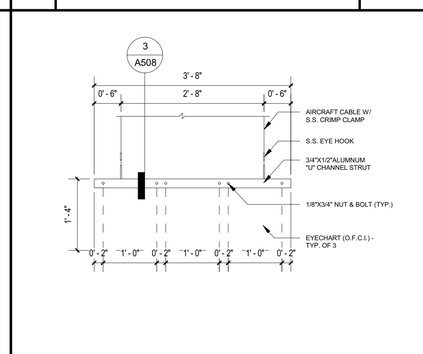

4 SIGNAGE-EYE CHART — 3/4" = 1'-0"

IDENTIFICATION STAMP
DIV. OF THE STATE ARCHITECT
APP: 03-121324 INC:
REVIEWED FOR
SS ☐ FLS ☐ ACS ☑
DATE: 09/14/2022

OFFICE OF THE STATE FIRE MARSHAL
APPROVED FIRE AND PANIC ONLY
09/07/22
21-0233
Approval of this plan does not authorize or approve any omission or deviation from applicable regulations. Final approval is subject to field inspection. One set of approved plans shall be available on the project site at all times.

DGS GENERAL SERVICES

Department of General Services
Architecture & Engineering Sections
State of California
Real Estate Services Division
Project Management & Development Branch
707 Third Street, Suite 4-105
West Sacramento, California 95605

LICENSED ARCHITECT
JEREMY K. KHOO
C-35651
REN. 05/31/23
STATE OF CALIFORNIA

DMV
State of California
Department of Motor Vehicles

Issue

No.	Date	Description
1	9/2/22	

Project
SANTA MARIA FIELD OFFICE REPLACEMENT
2770 SANTA MARIA WAY
SANTA MARIA, CA 93455
SANTA MARIA COUNTY

DEPT OF MOTOR VEHICLES

Supervisor	Designed	Drawn
MG	GP	JK

DSA App No. 03-121324
SFM Permit No. 21-S-0233-CP-ER

Sheet Title
DETAILS - SIGNAGE

Project Number
DGS000000140725

Sheet Scale
Sheet Number
A508

Copyright © 2020, California Department of General Services - Real Estate Services Division

C:\Projects\000000000000140725_ARC_Project Master_22_Jeremy Khoo58F93.rvt
7/12/2022 12:01:05 PM

RELATIVE BORDER SCALE IN INCHES

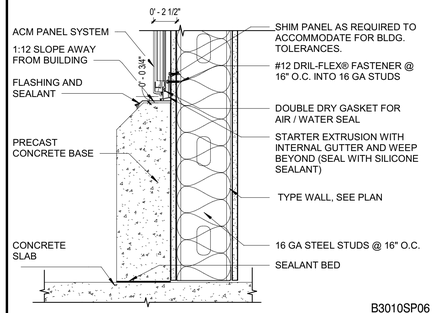

13 CONC BASE@MTL PANEL — 1 1/2" = 1'-0"

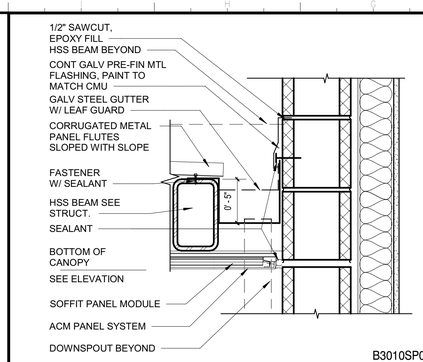

9 CANOPY @ CMU — 1 1/2" = 1'-0"

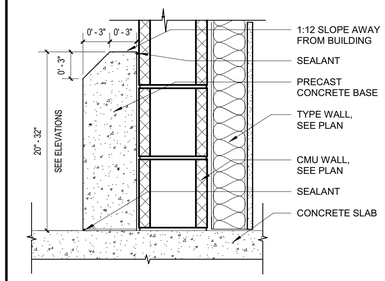

5 CONCRETE BASE — 1 1/2" = 1'-0"

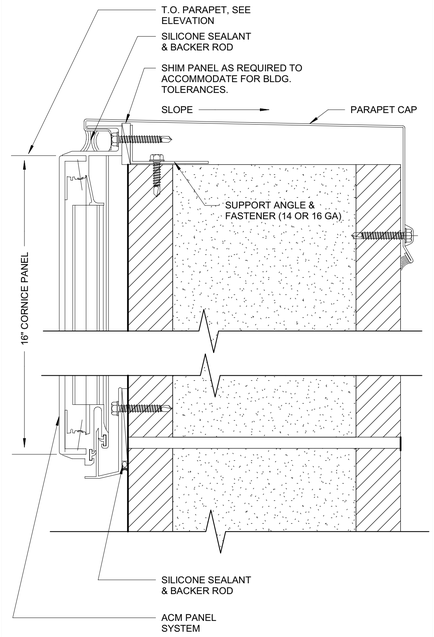

2 CORNICE DETAIL — 6" = 1'-0"

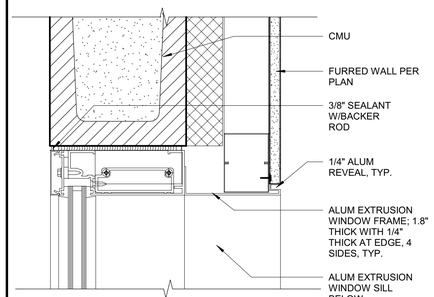

14 ALUM WND JAMB @ CMU — 3" = 1'-0"

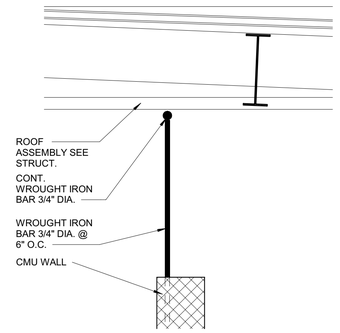

10 PATIO PICKETS — 1" = 1'-0"

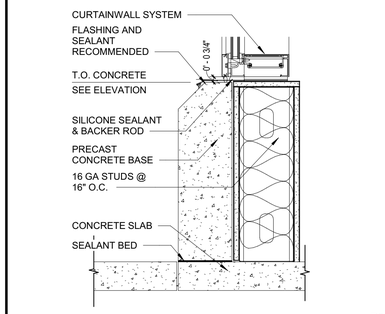

6 CONC BASE @ MTL WND — 1 1/2" = 1'-0"

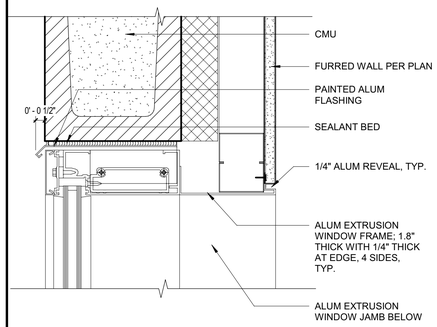

15 ALUM WND HEAD CMU — 3" = 1'-0"

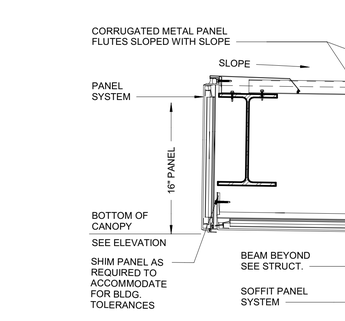

11 PATIO CANOPY — 1 1/2" = 1'-0"

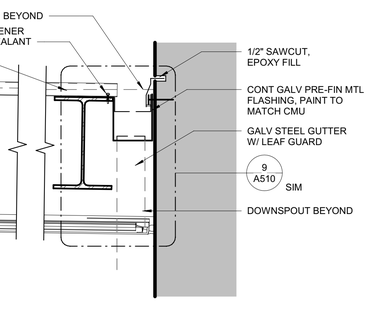

NOTE: SEE 18/A531 FOR HIGH PARAPET WALLS

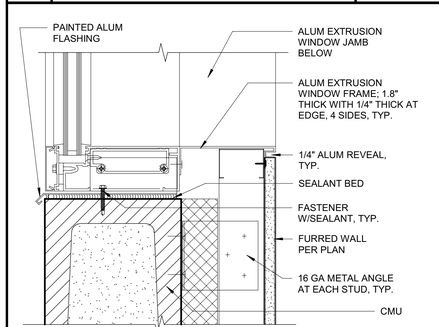

16 ALUM WND SILL @ CMU — 3" = 1'-0"

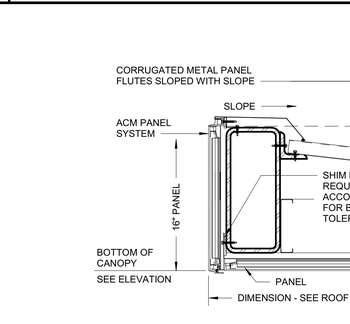

12 CANOPY DETAIL — 1 1/2" = 1'-0"

B3010SP06

4 ROOF AT PARAPET — 3" = 1'-0"

IDENTIFICATION STAMP
DIV. OF THE STATE ARCHITECT
APP: 03-121324 INC: A
REVIEWED FOR
SS ☐ FLS ☐ ACS ☑
DATE: 09/14/2022

OFFICE OF THE STATE FIRE MARSHAL
APPROVED FIRE AND PANIC ONLY
09/07/22
21-0233
Approval of this plan does not authorize or approve any omission or deviation from applicable regulations. Final approval is subject to field inspection. One set of approved plans shall be available on the project site at all times.

DGS GENERAL SERVICES
Department of General Services
Architecture & Engineering Sections
State of California
Real Estate Services Division
Project Management & Development Branch
707 Third Street, Suite 4-105
West Sacramento, California 95605

LICENSED ARCHITECT
JEREMY K. KHOO
C-35651
REN. 05/31/23
STATE OF CALIFORNIA

DMV
State of California
Department of Motor Vehicles

Issue

No.	Date	Description
1	9/2/22	

Project
SANTA MARIA FIELD OFFICE REPLACEMENT
2770 SANTA MARIA WAY
SANTA MARIA, CA 93455
SANTA MARIA COUNTY

DEPT OF MOTOR VEHICLES

Supervisor	Designed	Drawn
MG	GP	EK

DSA App No. 03-121324
SFM Permit No. 21-S-0233-CP-ER

Sheet Title
EXTERIOR DETAILS

Project Number
DGS000000140725

Sheet Scale
Sheet Number
A510

Copyright © 2020, California Department of General Services- Real Estate Services Division

C:\Projects\000000000140725_ARC_Project Master_22_Jeremy.Khoo58F93.rvt
7/13/2022 10:33:32 AM

RELATIVE BORDER SCALE IN INCHES

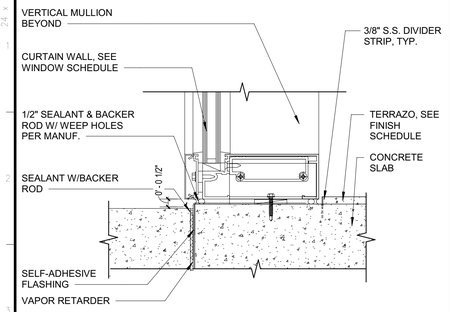

6 TYP MTL WNW SILL@SLB — 3" = 1'-0"

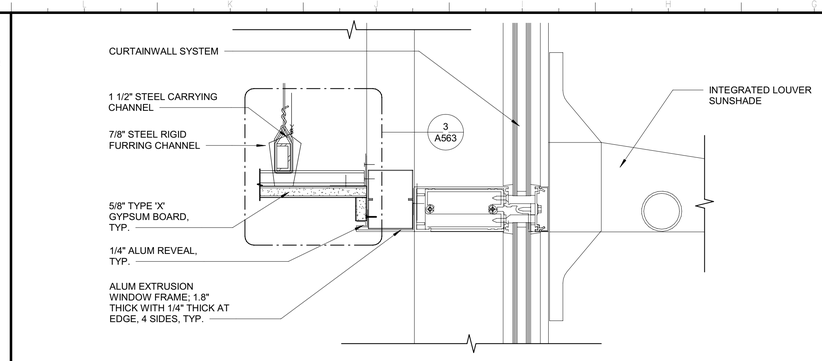

3 TYPICAL METAL PANEL WINDOW W/CLG & SUNSHADE — 3" = 1'-0"

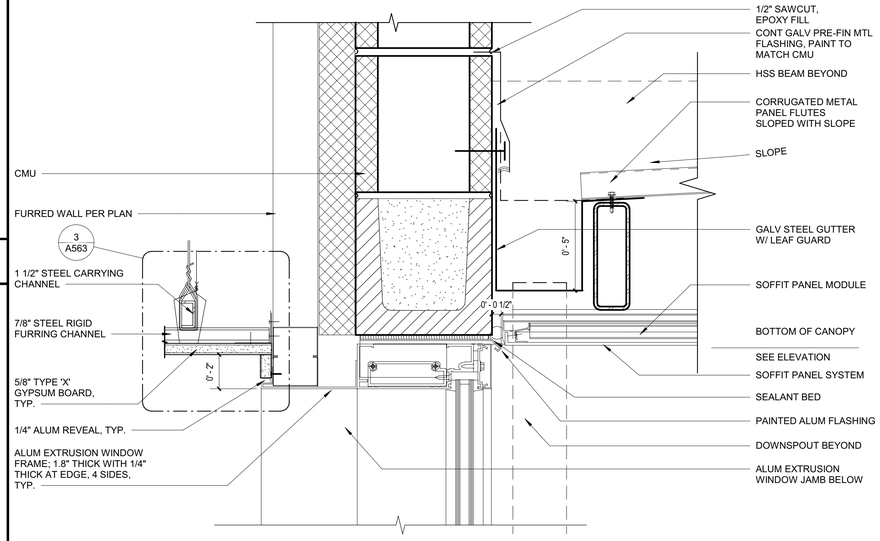

1 ALUM WINDOW HEAD CMU W/CLG — 3" = 1'-0"

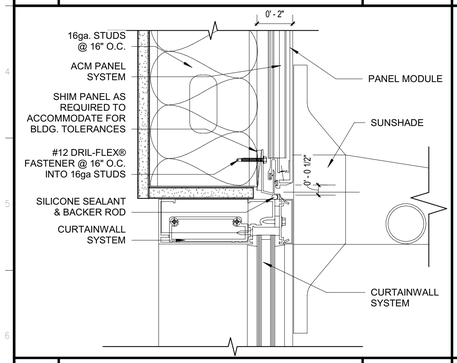

7 TYP MTL WNW HD@SHD — 3" = 1'-0"

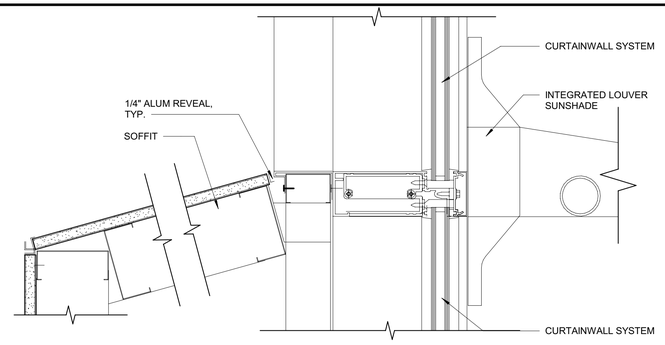

4 TYPICAL METAL PANEL WINDOW W/SOFFIT & SUNSHADE — 3" = 1'-0"

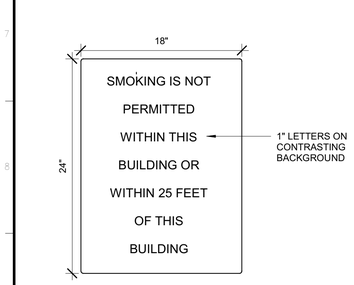

8 NO SMOKING — 1 1/2" = 1'-0"

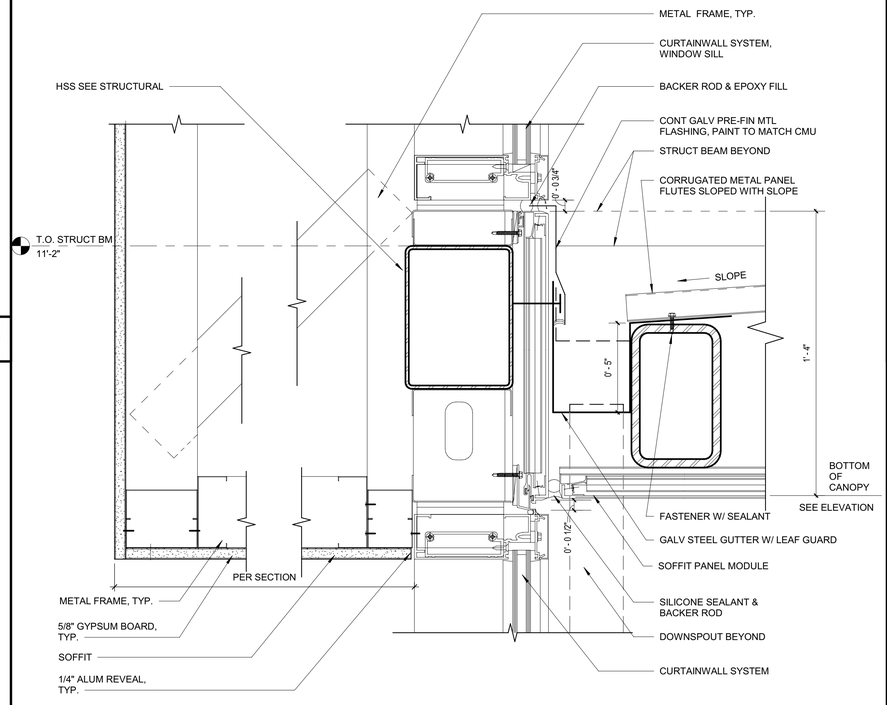

5 TYPICAL METAL PANEL CANOPY@WINDOW & SOFFIT — 3" = 1'-0"

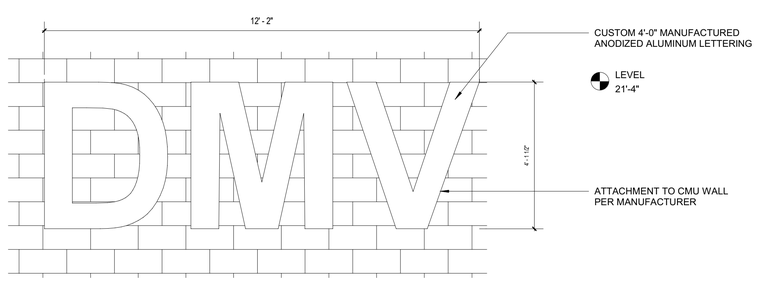

2 DMV LETTERING — 1/2" = 1'-0"

IDENTIFICATION STAMP
DIV. OF THE STATE ARCHITECT
APP: 03-121324 INC:
REVIEWED FOR
SS ☐ FLS ☐ ACS ☑
DATE: 09/14/2022

OFFICE OF THE STATE FIRE MARSHAL
APPROVED FIRE AND PANIC ONLY
09/07/22
21-0233
Approval of this plan does not authorize or approve any omission or deviation from applicable regulations. Final approval is subject to field inspection. One set of approved plans shall be available on the project site at all times.

DGS GENERAL SERVICES
Department of General Services
Architecture & Engineering Sections
State of California
Real Estate Services Division
Project Management & Development Branch
707 Third Street, Suite 4-105
West Sacramento, California 95605

LICENSED ARCHITECT
JEREMY K. KHOO
C-35651
REN. 05/31/23
STATE OF CALIFORNIA

DMV
State of California
Department of Motor Vehicles

Issue No.	Date	Description
1	9/2/22	

Project
SANTA MARIA FIELD OFFICE REPLACEMENT

2770 SANTA MARIA WAY
SANTA MARIA, CA 93455
SANTA MARIA COUNTY

DEPT OF MOTOR VEHICLES

Supervisor	Designed	Drawn
MG	GP	EK

DSA App No.	SFM Permit No.
03-121324	21-S-0233-CP-ER

Sheet Title
EXTERIOR DETAILS

Project Number
DGS000000140725

Sheet Scale

Sheet Number
A511

Copyright © 2020, California Department of General Services - Real Estate Services Division

C:\Projects\000000000140725_ARC_Project Master_22_Jeremy.Khoo58F93.rvt
7/12/2022 12:01:13 PM

RELATIVE BORDER SCALE IN INCHES

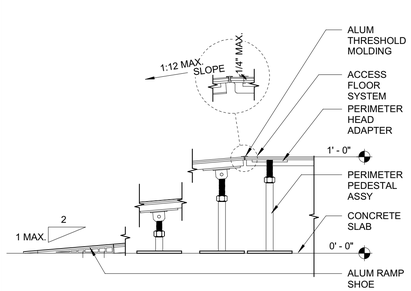

9 RAF RAMP ASSEMBLY — 1 1/2" = 1'-0"

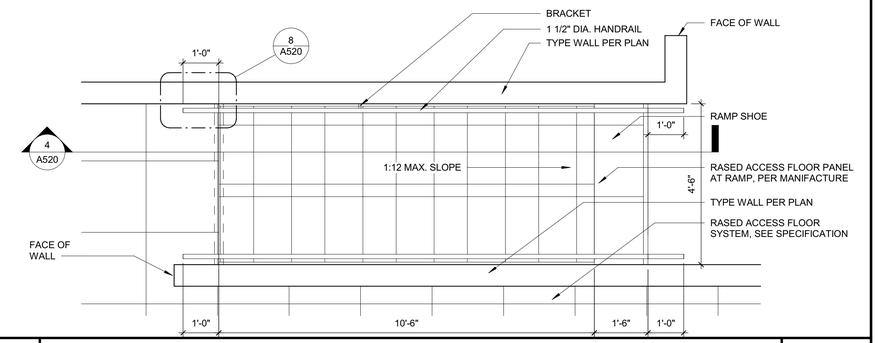

3 RAMP — 1/2" = 1'-0"

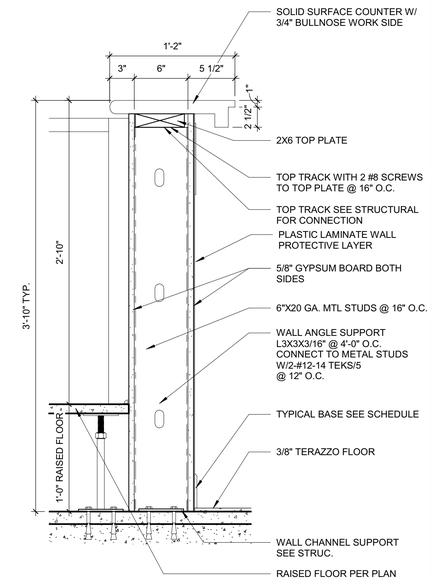

1 COUNTER AT PONY WALL — 1 1/2" = 1'-0"

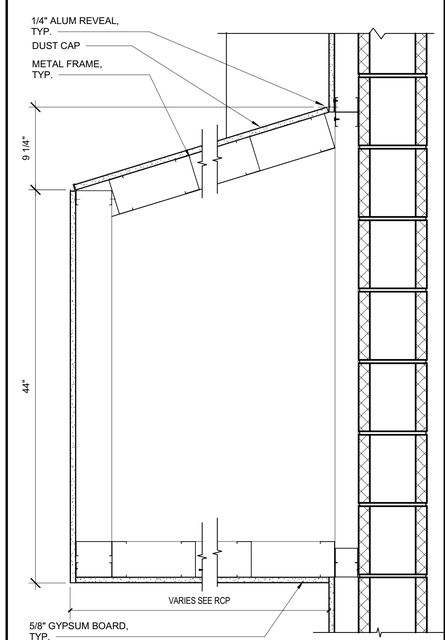

10 SOFFIT @ CMU — 1 1/2" = 1'-0"

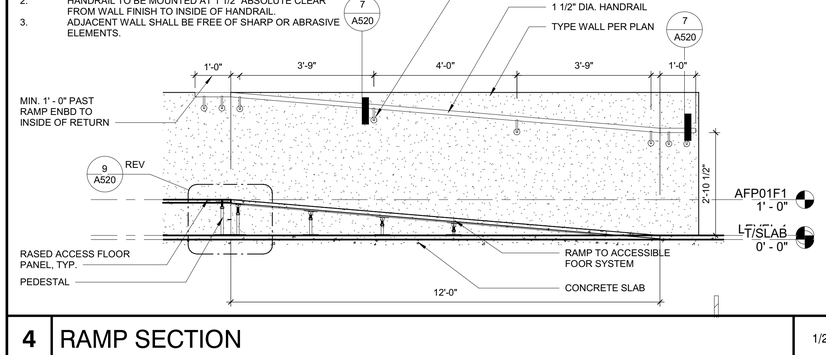

4 RAMP SECTION — 1/2" = 1'-0"

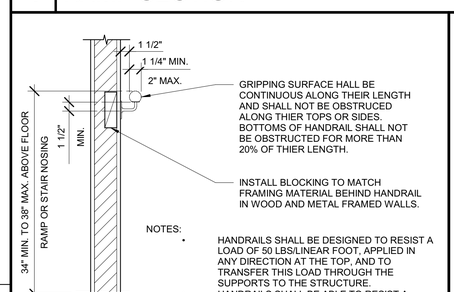

7 HANDRAIL SECTION — 1" = 1'-0"

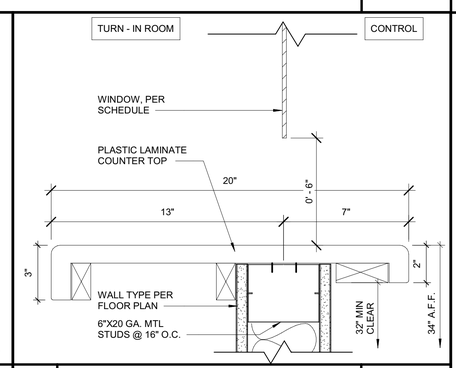

5 TRANSACTION WINDOW — 3" = 1'-0"

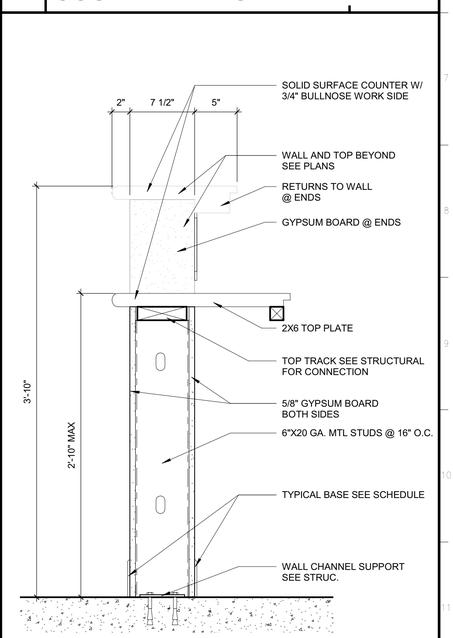

2 COUNTER ADA — 1 1/2" = 1'-0"

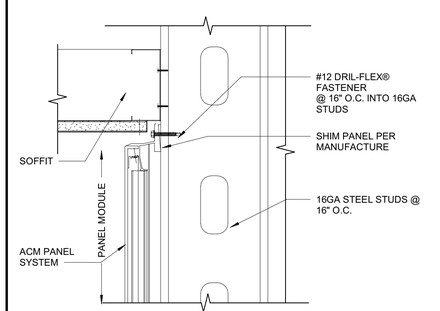

11 METAL PANEL @ SOFFIT — 3" = 1'-0"

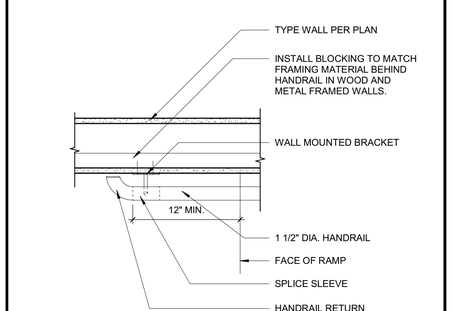

8 HANDRAIL MOUNTING DTL — 1 1/2" = 1'-0"

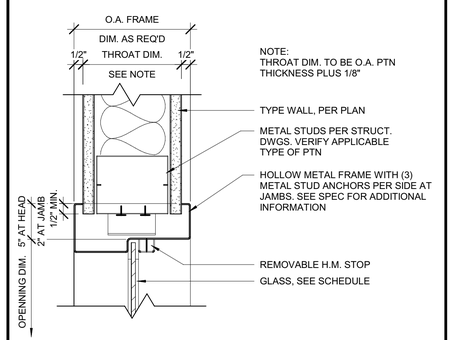

6 GLAZING HEAD/JAMB — 3" = 1'-0"

IDENTIFICATION STAMP
DIV. OF THE STATE ARCHITECT
APP: 03-121324 INC:
REVIEWED FOR
SS ☐ FLS ☐ ACS ☑
DATE: 09/14/2022

OFFICE OF THE STATE FIRE MARSHAL
APPROVED FIRE AND PANIC ONLY
09/07/22
21-0233
Approval of this plan does not authorize or approve any omission or deviation from applicable regulations. Final approval is subject to field inspection. One set of approved plans shall be available on the project site at all times.

GENERAL SERVICES
Department of General Services
Architecture & Engineering Sections
State of California
Real Estate Services Division
Project Management & Development Branch
707 Third Street, Suite 4-105
West Sacramento, California 95605

LICENSED ARCHITECT
JEREMY K. KHOO
C-35651
REN. 05/31/23
STATE OF CALIFORNIA

State of California
Department of Motor Vehicles

Issue

No.	Date	Description
1	9/2/22	

Project
SANTA MARIA FIELD OFFICE REPLACEMENT
2770 SANTA MARIA WAY
SANTA MARIA, CA 93455
SANTA MARIA COUNTY

DEPT OF MOTOR VEHICLES

Supervisor	Designed	Drawn
MG	GP	JK

DSA App No.	SFM Permit No.
03-121324	21-S-0233-CP-ER

Sheet Title
INTERIOR DETAILS

Project Number
DGS000000140725

Sheet Scale

Sheet Number
A520

Copyright © 2020, California Department of General Services- Real Estate Services Division

C:\Projects\000000000140725_ARC_Project Master_22_Jeremy.Khoo58F93.rvt
7/12/2022 12:01:18 PM

RELATIVE BORDER SCALE IN INCHES

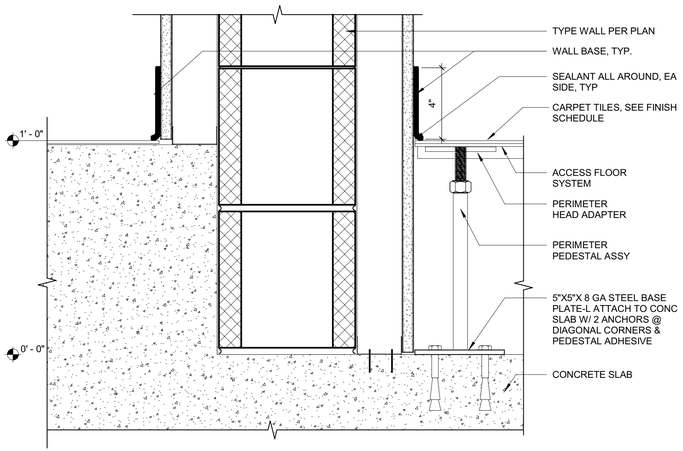

18 RAF @ CMU INT — 3" = 1'-0"

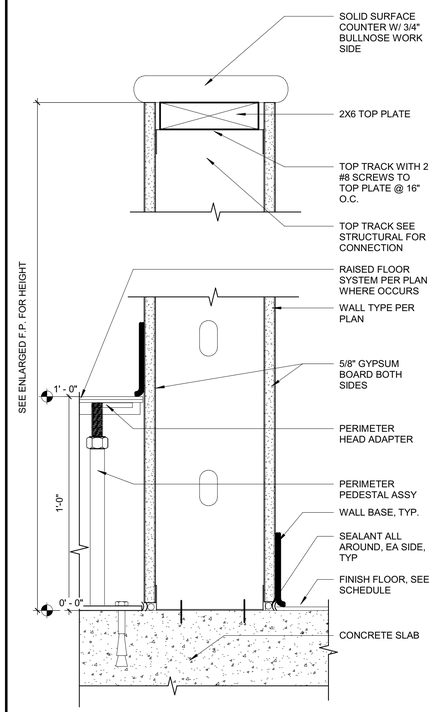

10 RAF @ PRTL HT WALL — 3" = 1'-0"

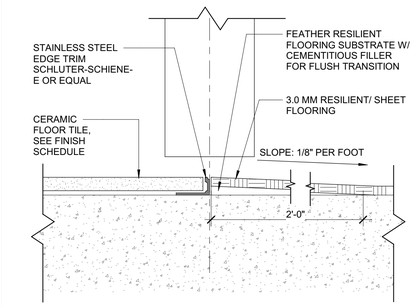

5 FLOOR TRANSITION C — 6" = 1'-0"

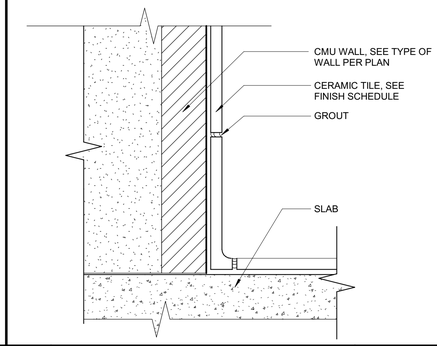

1 FLOOR TILE / CMU — 6" = 1'-0"

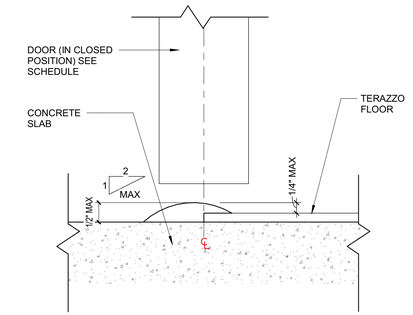

6 FLOOR TRANSITION D — 6" = 1'-0"

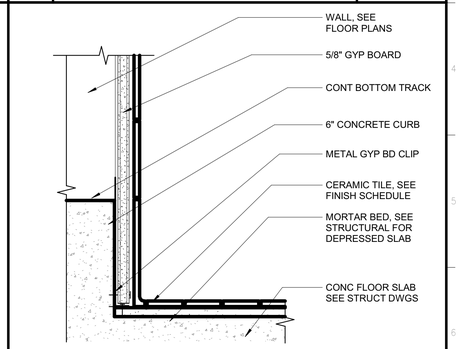

2 FLOOR TILE BASE — 3" = 1'-0"

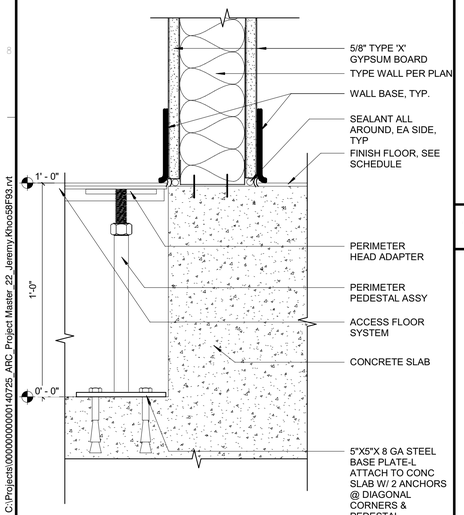

20 RAF @ 1-HR PARTITION — 3" = 1'-0"

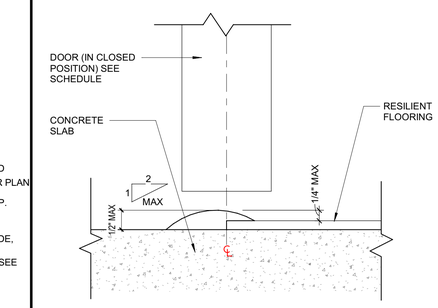

15 FLOOR TRANSITION H — 6" = 1'-0"

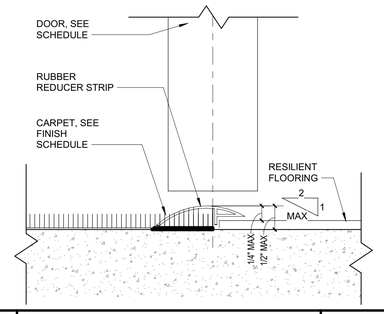

11 FLOOR TRANSITION G — 6" = 1'-0"

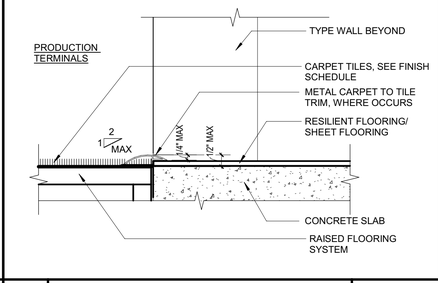

7 FLOOR TRANSITION E — 3" = 1'-0"

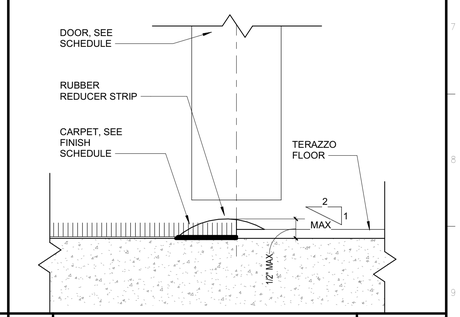

3 FLOOR TRANSITION A — 6" = 1'-0"

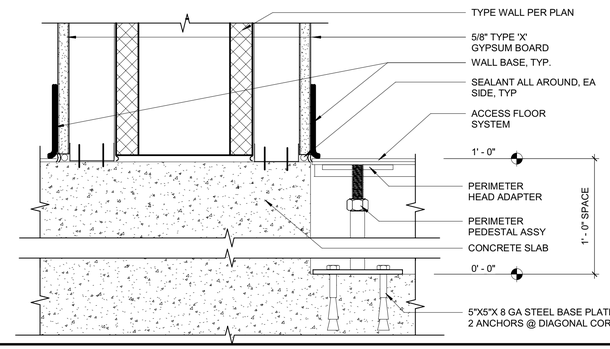

16 RAF @ CMU INT FURRED — 3" = 1'-0"

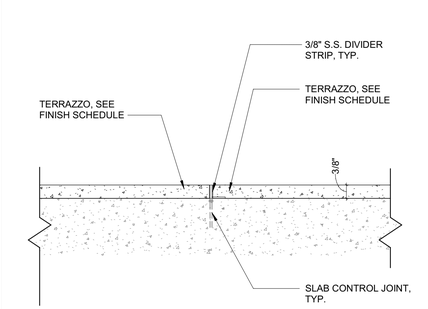

8 FLOOR TRANSITION F — 6" = 1'-0"

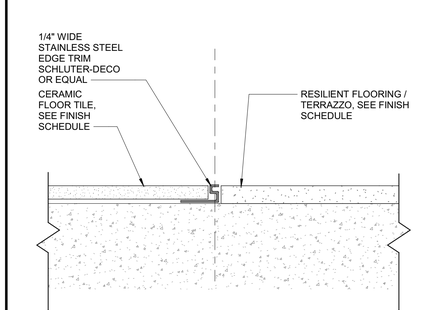

4 FLOOR TRANSITION B — 6" = 1'-0"

IDENTIFICATION STAMP
DIV. OF THE STATE ARCHITECT
APP: 03-121324 INC:
REVIEWED FOR
SS ☐ FLS ☐ ACS ☑
DATE: 09/14/2022

OFFICE OF THE STATE FIRE MARSHAL
APPROVED FIRE AND PANIC ONLY
09/07/22
21-0233
Approval of this plan does not authorize or approve any omission or deviation from applicable regulations. Final approval is subject to field inspection. One set of approved plans shall be available on the project site at all times.

DGS GENERAL SERVICES
Department of General Services
Architecture & Engineering Sections
State of California
Real Estate Services Division
Project Management & Development Branch
707 Third Street, Suite 4-105
West Sacramento, California 95605

LICENSED ARCHITECT
JEREMY K. KHOO
C-35651
REN. 05/31/23
STATE OF CALIFORNIA

DMV
State of California
Department of Motor Vehicles

Issue

No.	Date	Description
1	9/2/22	

Project
SANTA MARIA FIELD OFFICE REPLACEMENT
2770 SANTA MARIA WAY
SANTA MARIA, CA 93455
SANTA MARIA COUNTY

DEPT OF MOTOR VEHICLES

Supervisor	Designed	Drawn
MG	GP	EK

DSA App No. 03-121324
SFM Permit No. 21-S-0233-CP-ER

Sheet Title
INTERIOR DETAILS

Project Number
DGS000000140725

Sheet Scale
Sheet Number
A521

Copyright © 2020, California Department of General Services- Real Estate Services Division

C:\Projects\000000000140725_ARC_Project Master_22_Jeremy.Khoo58F93.rvt
7/12/2022 12:01:22 PM

RELATIVE BORDER SCALE IN INCHES

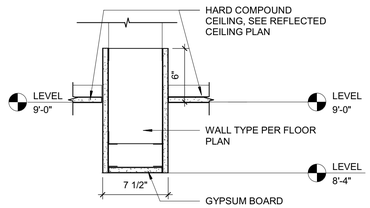

8 OPENING AT PARTITION — 1 1/2" = 1'-0"

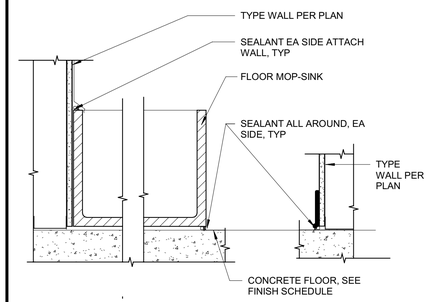

4 MOP SINK — 1 1/2" = 1'-0"

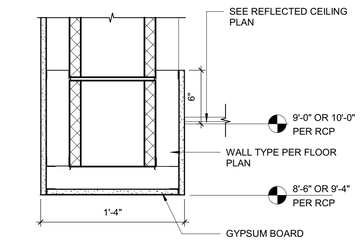

9 OPENING AT WALL 2 — 1 1/2" = 1'-0"

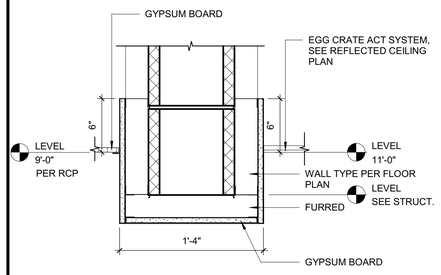

5 OPENING AT WALL 1 — 1 1/2" = 1'-0"

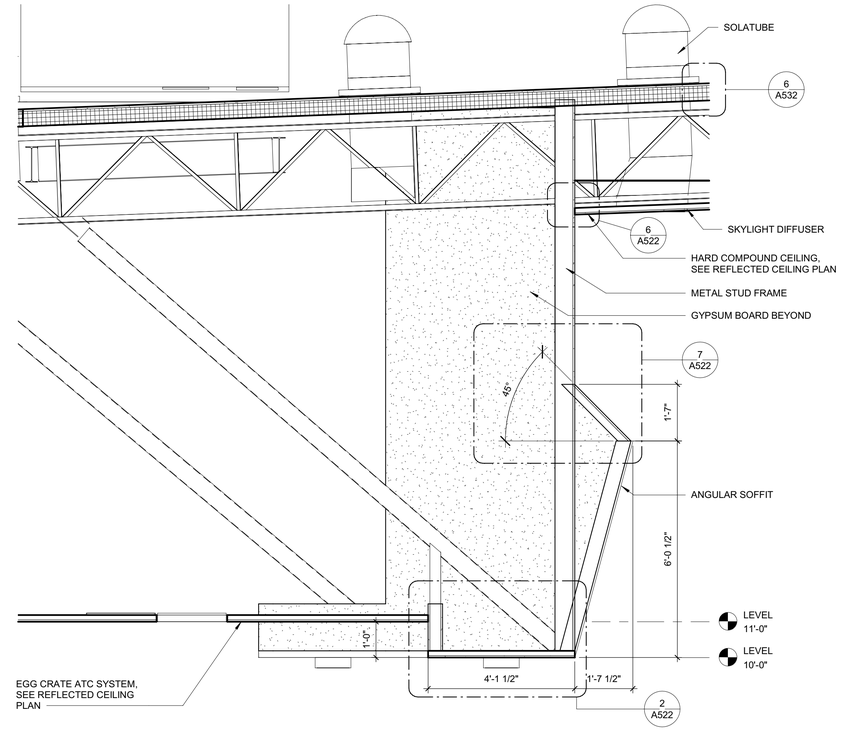

1 SOFFIT @ PRODUCTION TERMINALS — 1/2" = 1'-0"

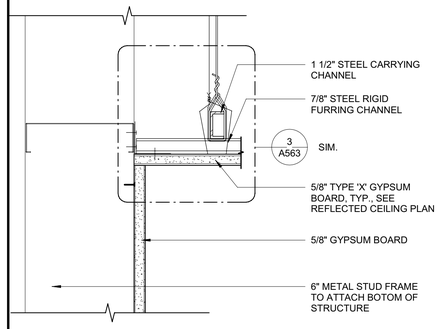

6 SOFFIT @ CLG — 3" = 1'-0"

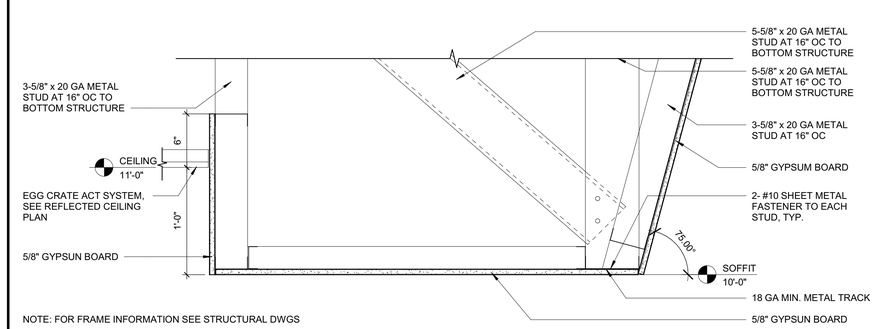

NOTE: FOR FRAME INFORMATION SEE STRUCTURAL DWGS

2 ANGULAR SOFFIT @ PRODUCTION TERMINALS — 1 1/2" = 1'-0"

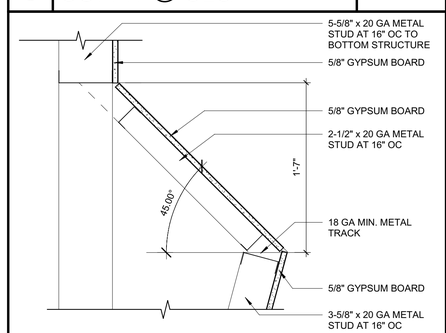

NOTE: FOR FRAME INFORMATION SEE STRUCTURAL DWGS

7 ANGULAR SOFFIT-TOP — 1 1/2" = 1'-0"

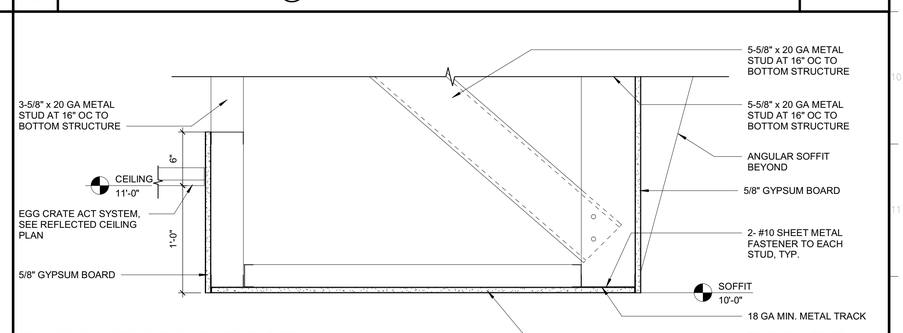

NOTE: FOR FRAME INFORMATION SEE STRUCTURAL DWGS

3 SOFFIT @ PRODUCTION TERMINALS — 1 1/2" = 1'-0"

IDENTIFICATION STAMP
DIV. OF THE STATE ARCHITECT
APP: 03-121324 INC:
REVIEWED FOR
SS ☐ FLS ☐ ACS ☑
DATE: 09/14/2022

OFFICE OF THE STATE FIRE MARSHAL
APPROVED FIRE AND PANIC ONLY
09/07/22
21-0233
Approval of this plan does not authorize or approve any omission or deviation from applicable regulations. Final approval is subject to field inspection. One set of approved plans shall be available on the project site at all times.

DGS GENERAL SERVICES
Department of General Services
Architecture & Engineering Sections
State of California
Real Estate Services Division
Project Management & Development Branch
707 Third Street, Suite 4-105
West Sacramento, California 95605

LICENSED ARCHITECT
JEREMY K. KHOO
C-35651
REN. 05/31/23
STATE OF CALIFORNIA

DMV
State of California
Department of Motor Vehicles

Issue

No.	Date	Description
1	9/2/22	

Project
SANTA MARIA FIELD OFFICE REPLACEMENT
2770 SANTA MARIA WAY
SANTA MARIA, CA 93455
SANTA MARIA COUNTY

DEPT OF MOTOR VEHICLES

Supervisor	Designed	Drawn
MG	JK	EK

DSA App No. 03-121324
SFM Permit No. 21-S-0233-CP-ER

Sheet Title
INTERIOR DETAILS

Project Number
DGS000000140725

Sheet Scale
Sheet Number
A522

Copyright © 2020, California Department of General Services - Real Estate Services Division

C:\Projects\000000000000140725_ARC_Project Master_22_Jeremy.Khoo58F93.rvt
7/12/2022 12:01:26 PM

RELATIVE BORDER SCALE IN INCHES

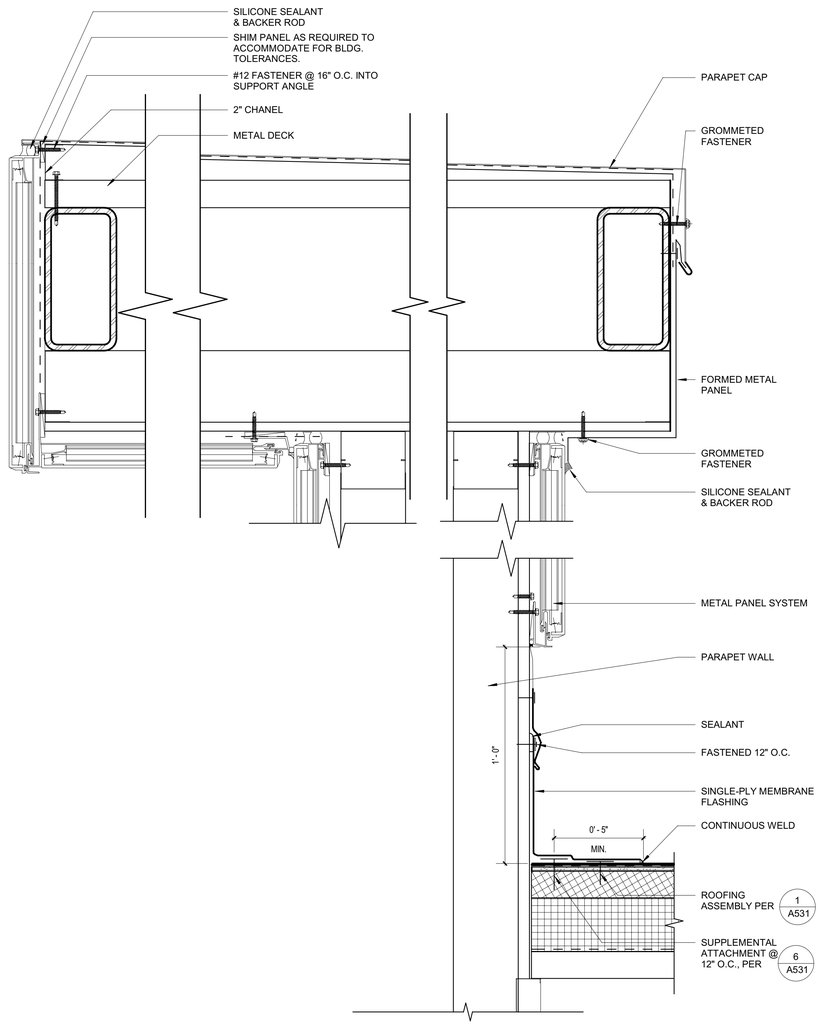

B3010SP06

19 ROOF AT PARAPET — 3" = 1'-0"

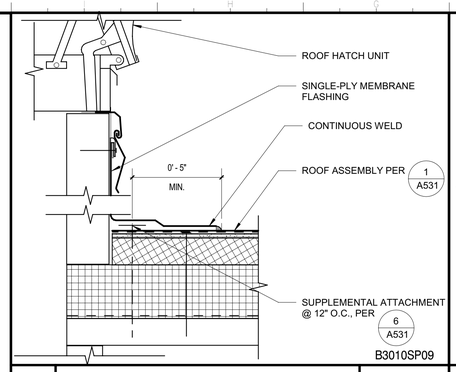

B3010SP09

9 ROOF HATCH FLASHING — 3" = 1'-0"

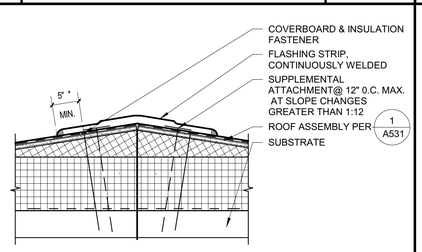

B3010SP10

10 PEAK / RIDGE — 3" = 1'-0"

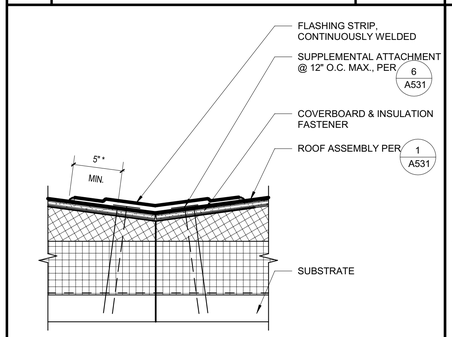

B3010SP11

11 SLOPE TRANSITION — 3" = 1'-0"

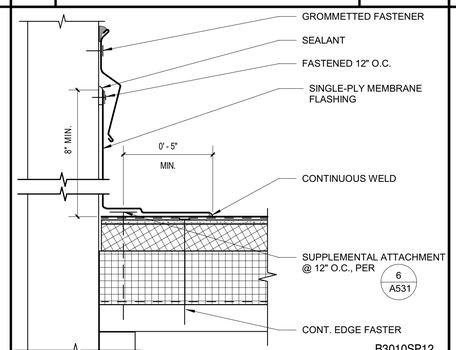

B3010SP12

12 COUNTERFLASH TERM — 3" = 1'-0"

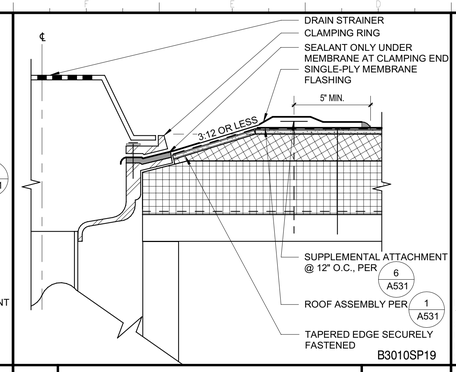

B3010SP19

5 CLAMPING RING DRAIN — 3" = 1'-0"

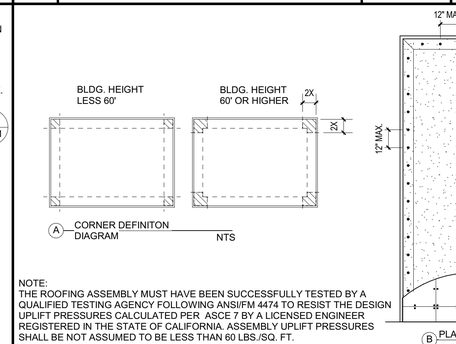

NOTE:
THE ROOFING ASSEMBLY MUST HAVE BEEN SUCCESSFULLY TESTED BY A QUALIFIED TESTING AGENCY FOLLOWING ANSI/FM 4474 TO RESIST THE DESIGN UPLIFT PRESSURES CALCULATED PER ASCE 7 BY A LICENSED ENGINEER REGISTERED IN THE STATE OF CALIFORNIA. ASSEMBLY UPLIFT PRESSURES SHALL BE NOT ASSUMED TO BE LESS THAN 60 LBS./SQ. FT.

6 SINGLE PLY ASSEMBLY ATTACHMENT — 1/4" = 1'-0"

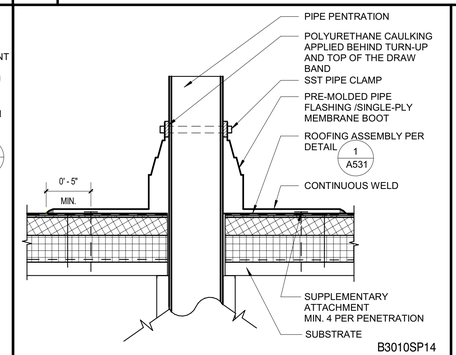

B3010SP14

7 PIPE PENETRATION — 1 1/2" = 1'-0"

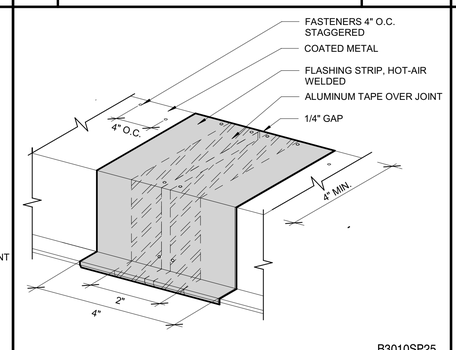

B3010SP25

8 FLASHING AT JOINTS — NOT TO SCALE

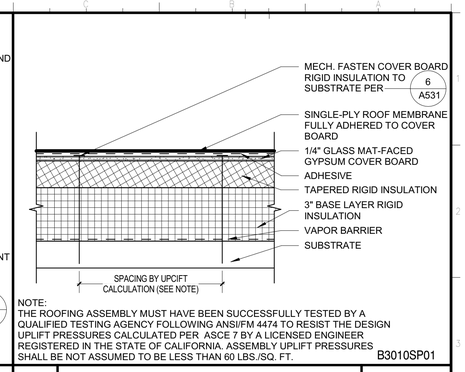

NOTE:
THE ROOFING ASSEMBLY MUST HAVE BEEN SUCCESSFULLY TESTED BY A QUALIFIED TESTING AGENCY FOLLOWING ANSI/FM 4474 TO RESIST THE DESIGN UPLIFT PRESSURES CALCULATED PER ASCE 7 BY A LICENSED ENGINEER REGISTERED IN THE STATE OF CALIFORNIA. ASSEMBLY UPLIFT PRESSURES SHALL BE NOT ASSUMED TO BE LESS THAN 60 LBS./SQ. FT.

B3010SP01

1 SINGLE PLY ASSEMBLY — 3" = 1'-0"

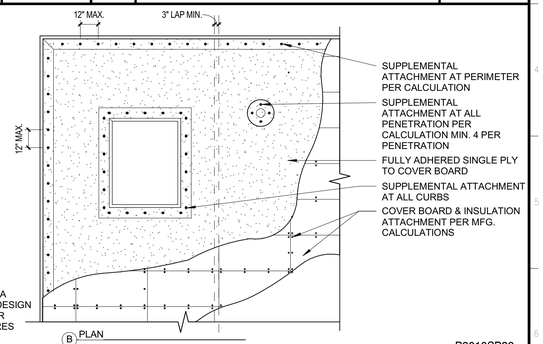

B3010SP26

6 SINGLE PLY ASSEMBLY ATTACHMENT — 1/4" = 1'-0"

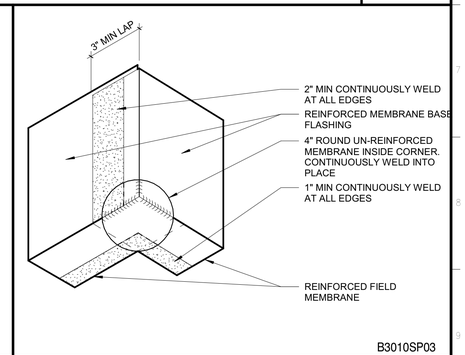

B3010SP03

3 CORNER FLASHING — NOT TO SCALE

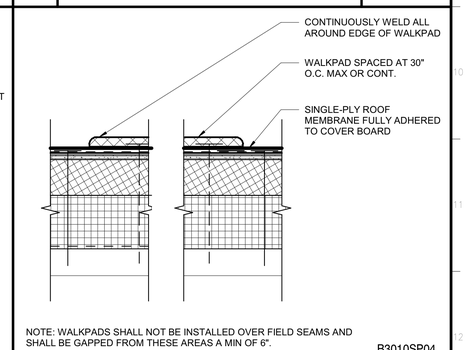

NOTE: WALKPADS SHALL NOT BE INSTALLED OVER FIELD SEAMS AND SHALL BE GAPPED FROM THESE AREAS A MIN OF 6".

B3010SP04

4 WALKPADS — 3" = 1'-0"

IDENTIFICATION STAMP
DIV. OF THE STATE ARCHITECT
APP: 03-121324 INC:
REVIEWED FOR
SS ☐ FLS ☐ ACS ☑
DATE: 09/14/2022

OFFICE OF THE STATE FIRE MARSHAL
APPROVED FIRE AND PANIC ONLY
09/07/22
21-0233
Approval of this plan does not authorize or approve any omission or deviation from applicable regulations. Final approval is subject to field inspection. One set of approved plans shall be available on the project site at all times.

DGS GENERAL SERVICES

Department of General Services
Architecture & Engineering Sections
State of California
Real Estate Services Division
Project Management & Development Branch
707 Third Street, Suite 4-105
West Sacramento, California 95605

LICENSED ARCHITECT
JEREMY K. KHOO
C-35651
REN. 05/31/23
STATE OF CALIFORNIA

DMV
State of California
Department of Motor Vehicles

Issue

No.	Date	Description
1	9/2/22	

Project
SANTA MARIA FIELD OFFICE REPLACEMENT
2770 SANTA MARIA WAY
SANTA MARIA, CA 93455
SANTA MARIA COUNTY
DEPT OF MOTOR VEHICLES

Supervisor	Designed	Drawn
MG	GP	JK

DSA App No. 03-121324
SFM Permit No. 21-S-0233-CP-ER

Sheet Title
ROOFING DETAILS

Project Number
DGS000000140725

Sheet Scale
Sheet Number
A531

Copyright © 2020, California Department of General Services: Real Estate Services Division

C:\Projects\000000000140725_ARC_Project Master_22_Jeremy.Khoo58F93.rvt
7/12/2022 12:01:30 PM

RELATIVE BORDER SCALE IN INCHES

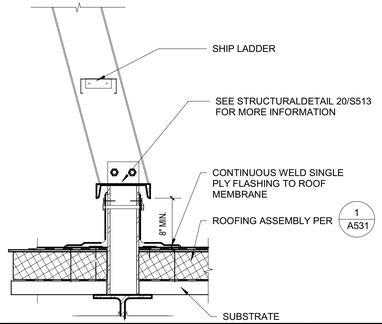

13 SHIP LADDER DTL — 1 1/2" = 1'-0"

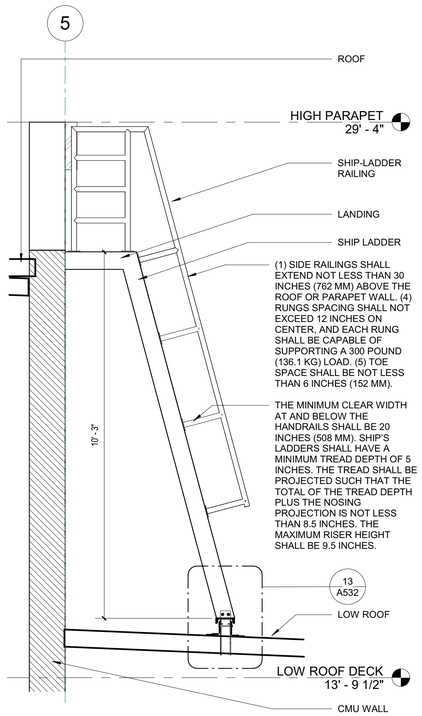

10 SHIP-LADDER SECTION — 1/2" = 1'-0"

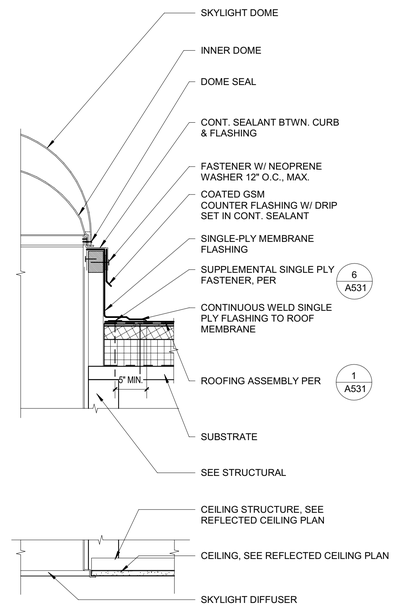

B3010SP22

6 SOLATUBE SKYLIGHT — 1 1/2" = 1'-0"

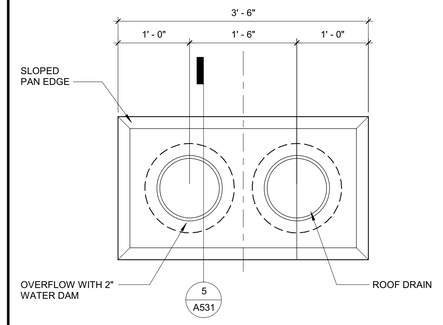

1 ROOF DRAIN AND O.F — 1" = 1'-0"

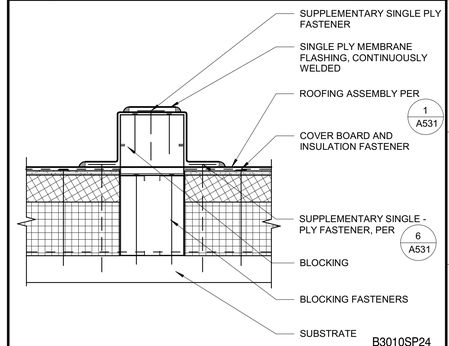

B3010SP24

2 WOOD SLEEPER — 3" = 1'-0"

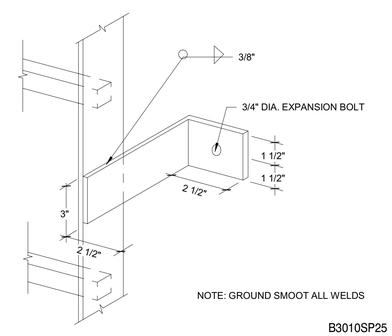

NOTE: GROUND SMOOT ALL WELDS

B3010SP25

11 LADDER WALL ANCHOR — 3" = 1'-0"

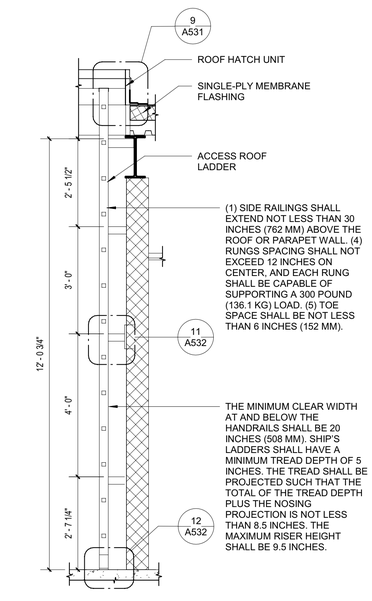

8 LADDER — 1/2" = 1'-0"

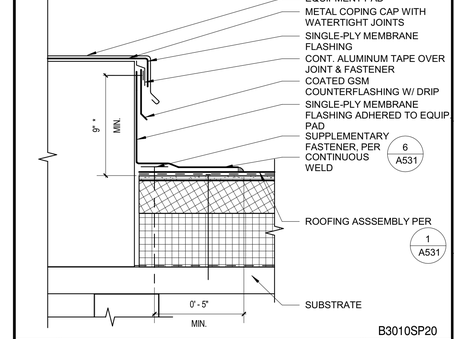

B3010SP20

3 EQUIPMENT PAD — 3" = 1'-0"

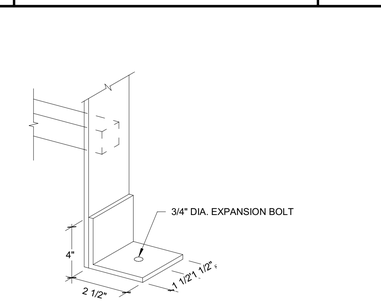

NOTE: GROUND SMOOTH ALL WELDS

B3010SP25

12 LADDER FLR. ANCHOR — 3" = 1'-0"

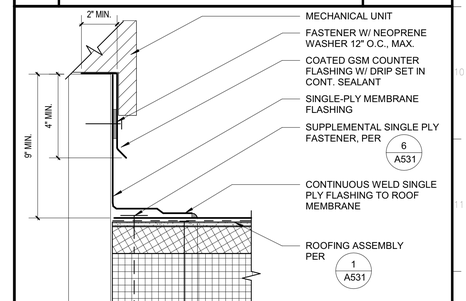

B3010SP22

4 CURB FLASHING — 3" = 1'-0"

IDENTIFICATION STAMP
DIV. OF THE STATE ARCHITECT
APP: 03-121324 INC:
REVIEWED FOR
SS ☐ FLS ☐ ACS ☑
DATE: 09/14/2022

OFFICE OF THE STATE FIRE MARSHAL
APPROVED FIRE AND PANIC ONLY
09/07/22
21-0233
Approval of this plan does not authorize or approve any omission or deviation from applicable regulations. Final approval is subject to field inspection. One set of approved plans shall be available on the project site at all times.

DGS GENERAL SERVICES

Department of General Services
Architecture & Engineering Sections
State of California
Real Estate Services Division
Project Management & Development Branch
707 Third Street, Suite 4-105
West Sacramento, California 95605

LICENSED ARCHITECT
JEREMY K. KHOO
C-35651
REN. 05/31/23
STATE OF CALIFORNIA

DMV
State of California
Department of Motor Vehicles

Issue No.	Date	Description
1	9/2/22	

Project
SANTA MARIA FIELD OFFICE REPLACEMENT

2770 SANTA MARIA WAY
SANTA MARIA, CA 93455
SANTA MARIA COUNTY

DEPT OF MOTOR VEHICLES

Supervisor	Designed	Drawn
MG	GP	JK

DSA App No. 03-121324
SFM Permit No. 21-S-0233-CP-ER

Sheet Title
ROOFING DETAILS

Project Number
DGS000000140725

Sheet Scale

Sheet Number
A532

Copyright © 2020, California Department of General Services - Real Estate Services Division

C:\Projects\000000000140725_ARC_Project Master_22_Jeremy.Khoo58F93.rvt
9/2/2022 1:24:03 PM

RELATIVE BORDER SCALE IN INCHES 0 1 2

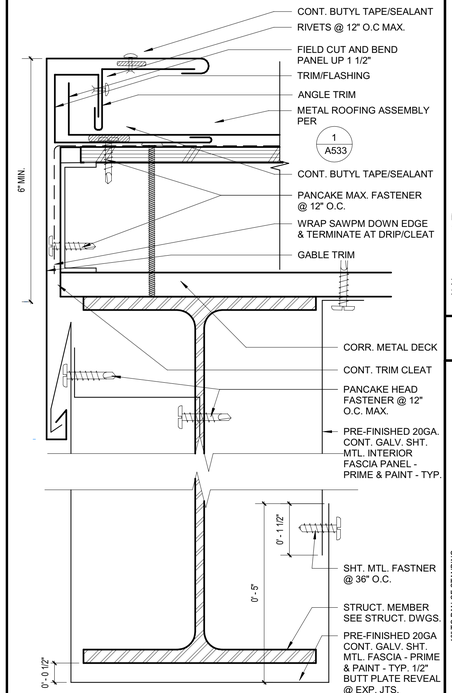

6 RAKE — 6" = 1'-0"

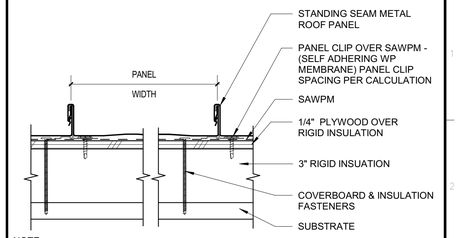

NOTE:
1. THE ROOFING ASSEMBLY MUST HAVE BEEN SUCCESSFULLY TESTED BY A QUALIFIED TESTING AGENCY FOLLOWING ANSI/FM 4474 TO RESIST THE DESIGN UPLIFT PRESSURES CALCULATED PER ASEC 7 BY A LICENSED ENGINEER REGISTERED IN THE STATE OF CALIFORNIA ASSEMBLY UPLIFT PRESSURES SHALL BE NOT ASSUMED TO BE LESS THAN 60 LBS./SQ. FT.
2. FIELD CUT FIRST AND LAST PANEL TO EQUAL WIDTH, TYP.
3. ALL EXPOSED ENDS OF PANELS, TRIM OR ACCESSORIES TO BE HEMMED 1" MIN. - TYP.

B3010MT01

1 MTL. ROOF ASSEMBLY — 3" = 1'-0"

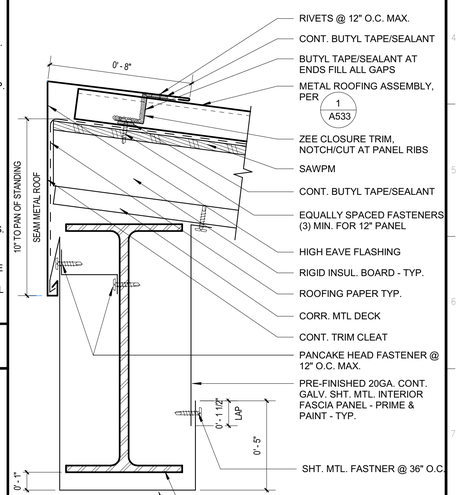

B3010MT13

3 EAVE - HIGH — 3" = 1'-0"

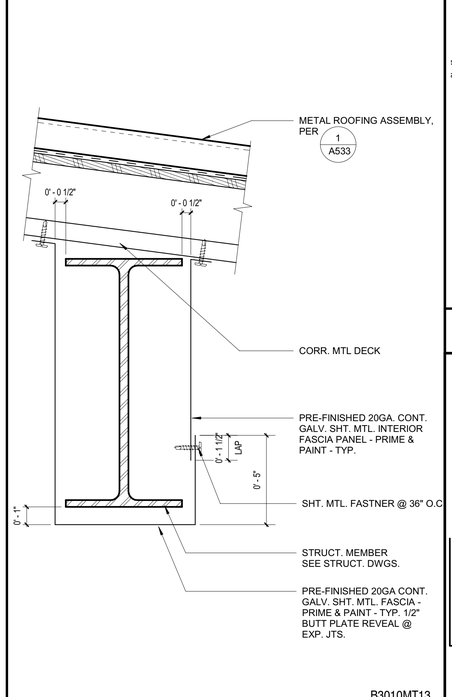

B3010MT13

8 BEAMS — 3" = 1'-0"

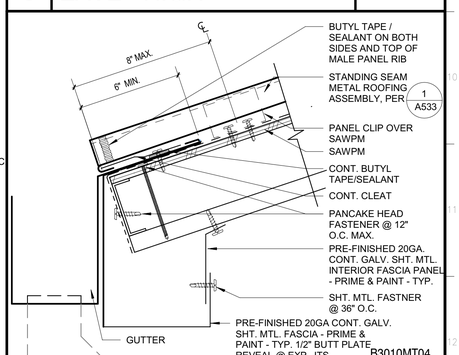

B3010MT04

4 EAVE — 3" = 1'-0"

IDENTIFICATION STAMP
DIV. OF THE STATE ARCHITECT
APP: 03-121324 INC:
REVIEWED FOR
SS ☐ FLS ☐ ACS ☑
DATE: 09/14/2022

OFFICE OF THE STATE FIRE MARSHAL
APPROVED FIRE AND PANIC ONLY
09/07/22
21-0233
Approval of this plan does not authorize or approve any omission or deviation from applicable regulations. Final approval is subject to field inspection. One set of approved plans shall be available on the project site at all times.

GENERAL SERVICES
Department of General Services
Architecture & Engineering Sections
State of California
Real Estate Services Division
Project Management & Development Branch
707 Third Street, Suite 4-105
West Sacramento, California 95605

LICENSED ARCHITECT
JEREMY K. KHOO
C-35651
REN. 05/31/23
STATE OF CALIFORNIA

DMV
State of California
Department of Motor Vehicles

Issue

No.	Date	Description
1	9/2/22	

Project
SANTA MARIA FIELD OFFICE REPLACEMENT
2770 SANTA MARIA WAY
SANTA MARIA, CA 93455
SANTA MARIA COUNTY

DEPT OF MOTOR VEHICLES

Supervisor	Designed	Drawn
MG	GP	JK

DSA App No.	SFM Permit No.
03-121324	21-S-0233-CP-ER

Sheet Title
GENERAL METAL ROOFING DETAILS

Project Number
DGS000000140725

Sheet Scale

Sheet Number
A533

Copyright © 2020, California Department of General Services- Real Estate Services Division

C:\Projects\000000000140725_ARC_Project Master_22_Jeremy.Khoo58F93.rvt
7/12/2022 12:01:37 PM

RELATIVE BORDER SCALE IN INCHES

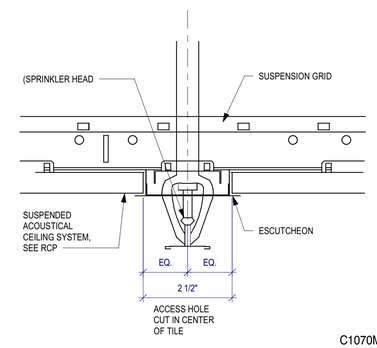

C1070MS11

11 SPRINKLER HEAD — 6" = 1'-0"

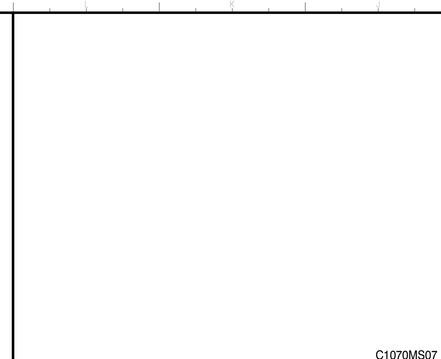

C1070MS07

7 NOT USED — 6" = 1'-0"

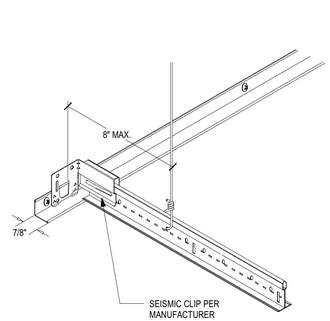

C1070MS05

5 GRID FIXED END — 1/8" = 1'-0"

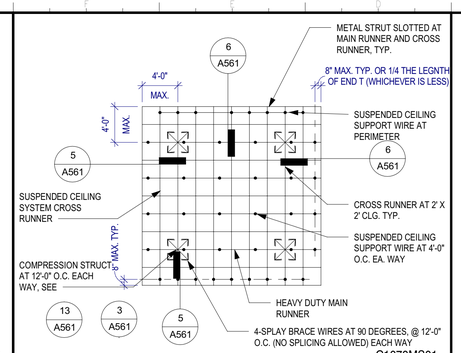

C1070MS01

1 TYP. 2X2 GRID PLAN — 1/8" = 1'-0"

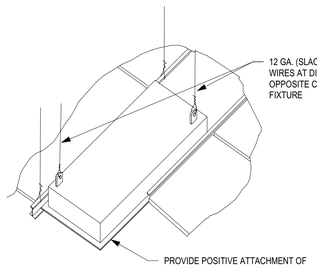

C1070MS12

12 LIGHT FIXT. SUPPORT — 1/8" = 1'-0"

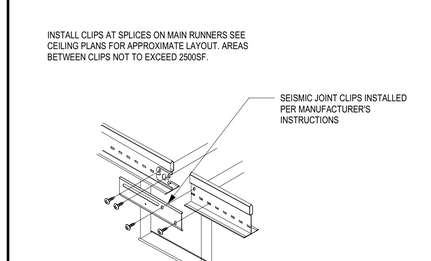

C1070MS08

8 BEAM SEISMIC JOINT — 1/8" = 1'-0"

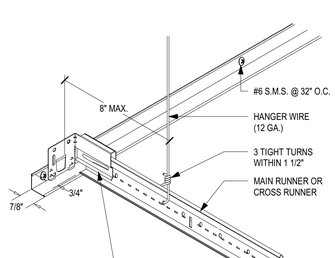

C1070MS06

6 GRID OPEN END — 1/8" = 1'-0"

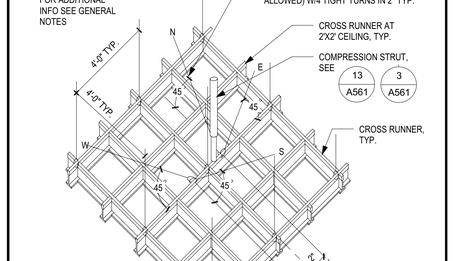

C1070MS02

2 TYP. 2X2 GRID SUPPORT — 1/8" = 1'-0"

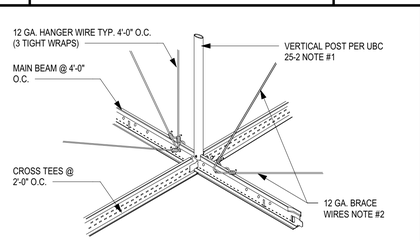

BRACING NOTES:

1. VERTICAL POSTS MAY NOT BE REQUIRED IN SOME CITIES AND NOT ENFORCED IN ALL SEISMIC ZONES.

2. BRACING WIRES TO BE ATTACHED MAXIMUM OF 45 DEGREES TO THE PLANE OF THE CEILING AND PARALLEL TO THE COMPONENTS AT THE BRACING POINT. BRACE WIRES TO BE TAUT AND TIED AT BOTH ENDS WITH THREE TIGHT WRAPS

C1070MS13

13 COMPRESSION POST — 1 1/2" = 1'-0"

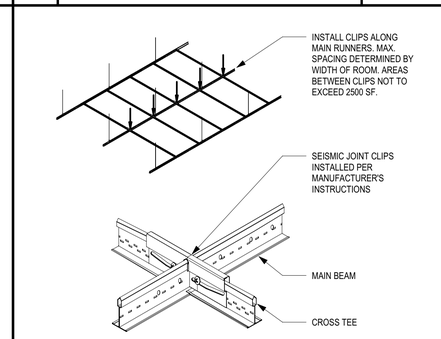

C1070MS09

9 SEISMIC JOINT CLIP — 1/8" = 1'-0"

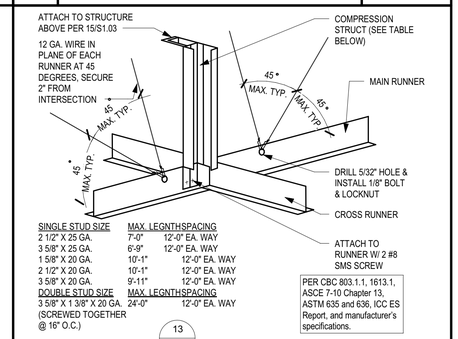

SINGLE STUD SIZE	MAX. LEGNTH	SPACING
2 1/2" X 25 GA.	7'-0"	12'-0" EA. WAY
3 5/8" X 25 GA.	6'-9"	12'-0" EA. WAY
1 5/8" X 20 GA.	10'-1"	12'-0" EA. WAY
2 1/2" X 20 GA.	10'-1"	12'-0" EA. WAY
3 5/8" X 20 GA.	9'-11"	12'-0" EA. WAY

DOUBLE STUD SIZE	MAX. LEGNTH	SPACING
3 5/8" X 1 3/8" X 20 GA. (SCREWED TOGETHER @ 16" O.C.)	24'-0"	12'-0" EA. WAY

PER CBC 803.1.1, 1613.1, ASCE 7-10 Chapter 13, ASTM 635 and 636, ICC ES Report, and manufacturer's specifications.

SEE GENERAL NOTES AND 13/A561 FOR ADDITIONAL INFORMATION

C1070MS14

3 COMPRESSION STUD — 1 1/2" = 1'-0"

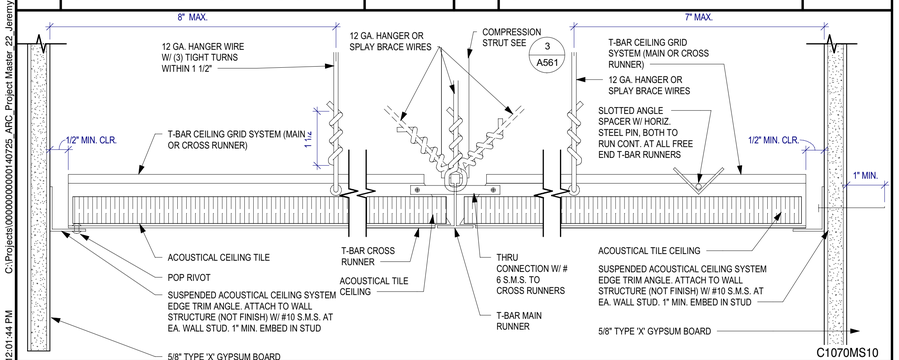

C1070MS10

10 LAY-IN CEILING SECTION — 6" = 1'-0"

GENERAL NOTES: C1070MS00

1. PROVIDE SETS OF FOUR 12 GA. SPLAYED BRACING WIRES ORIENTED 90 DEGREES FROM EACH OTHER AT THE FOLLOWING SPACING;
   A. PLACE SETS OF BRACING WIRES NOT MORE THAN 12 FT. X 12 FT. ON CENTER.
   B. PROVIDE BRACING WIRES AT LOCATIONS NOT MORE THAN 1/2 THE SPACING GIVEN IN 'A' ABOVE FROM EACH PERIMETER WALL AND AT THE EDGE OF VERTICAL CEILING OFFSETS.

2. SPLICES WILL NOT BE PERMITTED IN ANY HANGER WIRES.

3. PROVIDE TRAPEZE OR OTHER SUPPLEMENTAL SUPPORT MEMBERS AT OBSTRUCTIONS TO MAIN HANGER SPACING. PROVIDE ADDITIONAL HANGERS, STRUTS OR BRACES AS REQUIRED AT ALL CEILING BREAKS, SOFFITS OR DISCONTINUOUS AREAS. HANGER WIRES THAT ARE MORE THAN 1 IN 6 OUT OF PLUMB SHALL HAVE COUNTER-SLOPING WIRES.

4. FASTEN HANGER WIRES WITH NOT LESS THAN 3 TIGHT TURNS. FASTEN BRACING WIRES WITH 4 TIGHT TURNS. MAKE ALL TIGHT TURNS WITHIN A DISTANCE OF 11/2". HANGER OR BRACING WIRE ANCHORS TO THE STRUCTURE SHALL BE INSTALLED IN SUCH A MANNER THAT THE DIRECTION OF THE WIRE ALIGNS AS CLOSELY AS POSSIBLE WITH THE DIRECTION OF THE FORCES ON THAT WIRE.

5. SEPARATE ALL CEILING HANGING AND BRACING WIRES AT LEAST 6 INCHES FORM ALL UNBRACED DUCTS, PIPES, CONDUITS, ETC.

6. ATTACH ALL LIGHT FIXTURES TO THE CEILING GRID RUNNERS TO RESIST A HORIZONTAL FORCE EQUAL TO THE WEIGHT OF THE FIXTURES. ALL LIGHT FIXTURES SHALL BE ATTACHED SECURELY TO THE GRID WITH 4 SCREWS, ONE AT EACH CORNER OF THE FIXTURE.

7. WHEN DRILLED-IN CONCRETE ANCHORS ARE USED IN REINFORCED CONCRETE FOR HANGER WIRES, 1 OUT OF 10 MUST BE FIELD TESTED FOR 200 POUNDS OF TENSION. WHEN DRILLED-IN CONCRETE ANCHORS ARE USED FOR BRACING WIRES, 1 OUT OF 2 MUST BE FIELD TESTED FOR 440 POUNDS OF TENSION. SHOT -IN ANCHORS IN CONCRETE ARE NOT PERMITTED FOR BRACING WIRE. IF ANY SHOT-IN OR DRILLED-IN ANCHOR FAILS, ALL ADJACENT ANCHORS MUST BE TESTED. NOTES: DRILLED-IN OR SHOT-IN ANCHORS REQUIRE SPECIAL INSPECTION WHEN USED IN PRESTRESSED CONCRETE.

8. FLUSH OR RECESSED LIGHT FIXTURES AND AIR TERMINALS OR SERVICES WEIGHING LESS THAN 56 POUNDS MAY BE SUPPORTED DIRECTLY ON THE RUNNERS OF A HEAVY DUTY GRID SYSTEM BUT, IN ADDITION, THEY MUST HAVE A MINIMUM OF TWO 12 GA. SLACK SAFETY WIRES ATTACHED TO THE FIXTURES AT DIAGONAL CORNERS AND ANCHORED TO THE STRUCTURE ABOVE. ALL 4 FT. X 4 FT. LIGHT FIXTURES MUST HAVE SLACK SAFETY WIRES AT EACH CORNER.

9. ALL FLUSH OR RECESSED LIGHT FIXTURES AND AIR TERMINALS OR SERVICES WEIGHING 56 POUNDS OR MORE MUST BE INDEPENDENTLY SUPPORTED BY NOT LESS THAN 4 TAUT 12 GA. WIRES, EACH ATTACHED TO THE FIXTURE AND TO THE STRUCTURE ABOVE REGARDLESS OF THE TYPE OF CEILING GRID SYSTEM USED. THE 4 TAUT 12 GA. WIRES INCLUDING THEIR ATTACHMENT TO THE STRUCTURE ABOVE MUST BE CAPABLE OF SUPPORTING 4 TIMES THE WEIGHT OF THE UNIT.

10. SUPPORT SURFACE MOUNTED LIGHT FIXTURES BY AT LEAST TWO POSITIVE DEVICES WHICH SURROUND THE CEILING RUNNER AND WHICH ARE EACH SUPPORTED FROM THE STRUCTURE ABOVE BY A 12 GA. WIRE. SPRING CLIPS OR CLAMPS THAT CONNECT ONLY TO THE RUNNER ARE NOT ACCEPTABLE. PROVIDE ADDITIONAL SUPPORTS WHEN LIGHT FIXTURES ARE 8 FT. OR LONGER.

11. SUPPORT PENDANT MOUNTED LIGHT FIXTURES DIRECTLY FROM THE STRUCTURE ABOVE WITH HANGER WIRES OR CABLES PASSING THROUGH EACH PENDANT HANGER AND CAPABLE OF SUPPORTING 4 TIMES THE WEIGHT OF THE FIXTURE. ATTACH ALL LIGHT FIXTURES TO THE CEILING GRID RUNNERS TO RESIST A HORIZONTAL FORCE EQUAL TO THE WEIGHT OF THE FIXTURES. SPECIAL DETAILS ARE NECESSARY FOR THIS CONDITION AT THE CEILING GRID.

12. SPLICE MAIN RUNNER BY LAPPING AND INTERLOCKING FLAGES 12" MINIMUM TYING NEAR EACH END WITH DOUBLE LOOPS OF 16 GAGE WIRE

13. SPLICE CROSS-FURRING BY LAPPING AND INTERLOCKING THE PIECES 8" MINIMUM AND TYING NEAR EACH END WITH DOUBLE LOOPS OF 16 GAGE WIRE.

14. LIGHT FIXTURES AND MECHANICAL GRILLES WEIGHING LESS THAN 54 POUNDS: INSTALL MIN. TWO 12 GA. SLACK WIRES AT DIAGONAL CORNERS.
SURFACE OR CEILING GRID MOUNTED LIGHT FIXTURES AND MECHANICAL GRILLES WEIGHING MORE THAN 54 POUNDS: SUPPORT INDEPENDENTLY WITH TAUT WIRES CAPABLE OF SUPPORTING 4 TIMES THE WEIGHT OF THE ITEM. CEILING SYSTEM TO BE HEAVY DUTY. ATTACH ALL FIXTURES TO GRID RUNNERS TO RESIST HORIZONTAL FORCE EQUAL TO WEIGHT OF FIXTURE/GRILLE.

15. TOTAL WEIGHT OF CEILING SYSTEM INCLUDING CEILING MOUNTED AIR TERMINALS, SERVICES, AND LIGHT FIXTURES DOES NOT EXCEED 4 PSF.

16. REQUIRED ATTACHMENTS FOR METAL PANELS:
AC 3-SPECIFIED PANEL WEIGHTS .375 PSF. POSITIVE ATTACHMENT IS NOT REQUIRED REF. DSA 25-5, 2.2.
AC 4-SPECIFIED PANEL WEIGHTS 1 PSF. ATTACH PANEL TO CEILING SUSPENSION RUNNERS. PROVIDE MIN. #10 SMS EACH CORNER.

IDENTIFICATION STAMP
DIV. OF THE STATE ARCHITECT
APP: 03-121324 INC:
REVIEWED FOR
SS ☐ FLS ☐ ACS ☑
DATE: 09/14/2022

OFFICE OF THE STATE FIRE MARSHAL
APPROVED FIRE AND PANIC ONLY
09/07/22
21-0233
Approval of this plan does not authorize or approve any omission or deviation from applicable regulations. Final approval is subject to field inspection. One set of approved plans shall be available on the project site at all times.

DGS GENERAL SERVICES
Department of General Services
Architecture & Engineering Sections
State of California
Real Estate Services Division
Project Management & Development Branch
707 Third Street, Suite 4-105
West Sacramento, California 95605

LICENSED ARCHITECT
JEREMY K. KHOO
C-35651
REN. 05/31/23
STATE OF CALIFORNIA

DMV
State of California
Department of Motor Vehicles

Issue

No.	Date	Description
1	9/2/22	

Project
SANTA MARIA FIELD OFFICE REPLACEMENT
2770 SANTA MARIA WAY
SANTA MARIA, CA 93455
SANTA MARIA COUNTY

DEPT OF MOTOR VEHICLES

Supervisor	Designed	Drawn
MG	GP	JK

DSA App No. 03-121324
SFM Permit No. 21-S-0233-CP-ER

Sheet Title
LAY-IN CEILING DETAILS

Project Number
DGS000000140725

Sheet Scale

Sheet Number
A561

Copyright © 2020, California Department of General Services, Real Estate Services Division

C:\Projects\000000000140725_ARC_Project Master_22_Jeremy.Khoo58F93.rvt
7/12/2022 12:01:44 PM

RELATIVE BORDER SCALE IN INCHES

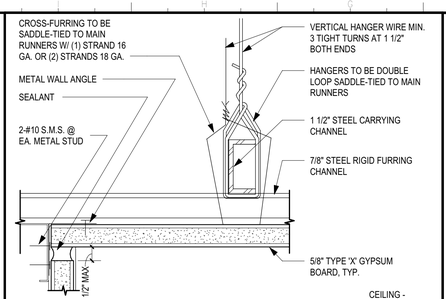

NOTE:
1. MAIN RUNNERS SHALL BE SPLICED BY LAPPING AND INTERLOCKING FLANGES 12" MIN. & CROSS-FURRING 8" MIN. AND TYPING NEAR EA. END W/ DOUBLE LOOPS OF #16 GA WIRE
2. FOR DETAILED HANGER WIRE REQUIREMENTS SEE GENERAL NOTES

(A) C1071MS05

5 CLG@RATED WALL — 6" = 1'-0"

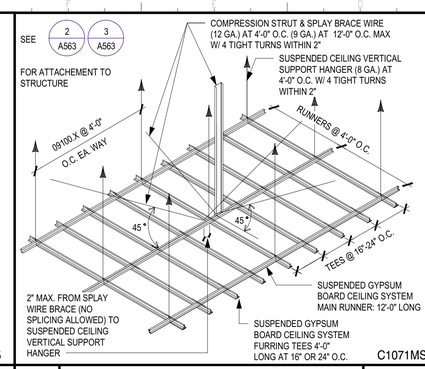

C1071MS01

1 SPLAY WIRE BRACING — 3" = 1'-0"

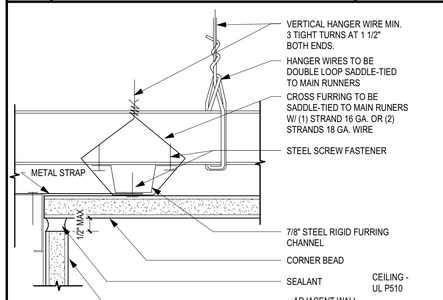

(B) NOTE:
1.FOR DETAILED HANGER WIRE REQUIREMENTS SEE GENERAL NOTES

C1071MS06

6 CLG@RATED WALL — 6" = 1'-0"

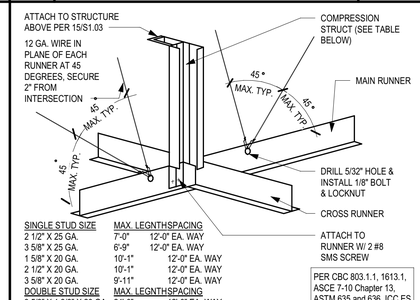

SINGLE STUD SIZE	MAX. LEGNTHSPACING	
2 1/2" X 25 GA.	7'-0"	12'-0" EA. WAY
3 5/8" X 25 GA.	6'-9"	12'-0" EA. WAY
1 5/8" X 20 GA.	10'-1"	12'-0" EA. WAY
2 1/2" X 20 GA.	10'-1"	12'-0" EA. WAY
3 5/8" X 20 GA.	9'-11"	12'-0" EA. WAY
DOUBLE STUD SIZE	MAX. LEGNTHSPACING	
3 5/8" X 1 3/8" X 20 GA. (SCREWED TOGETHER @ 16" O.C.)	24'-0"	12'-0" EA. WAY

SEE 1 A563 3 A563 FOR ADDITIONAL INFORMATION

PER CBC 803.1.1, 1613.1, ASCE 7-10 Chapter 13, ASTM 635 and 636, ICC ES Report, and manufacturer's specifications.

C1071MS02

2 COMPRESSION STUD — 1 1/2" = 1'-0"

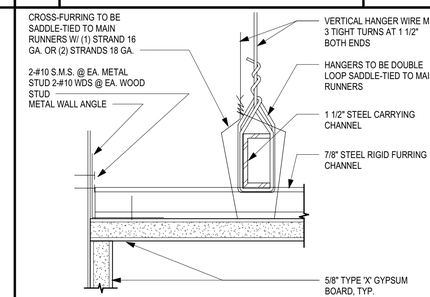

NOTE:
1. MAIN RUNNERS SHALL BE SPLICED BY LAPPING AND INTERLOCKING FLANGES 12" MIN. & CROSS-FURRING 8" MIN. AND TYPING NEAR EA. END W/ DOUBLE LOOPS OF #16 GA WIRE
2. FOR DETAILED HANGER WIRE REQUIREMENTS GENERAL NOTES

(A) C1071MS03

3 CLG@NON RATED WALL — 6" = 1'-0"

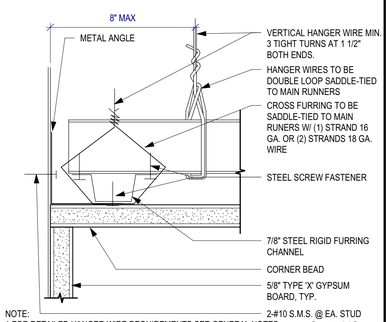

(B) NOTE:
1.FOR DETAILED HANGER WIRE REQUIREMENTS SEE GENERAL NOTES

C1071MS04

4 CLG@NON RATED WALL — 6" = 1'-0"

GENERAL NOTES: C1071MS00

1. PROVIDE SETS OF FOUR 12 GA. SPLAYED BRACING WIRES ORIENTED 90 DEGREES FROM EACH OTHER AT THE FOLLOWING SPACING:
   A. PLACE SETS OF BRACING WIRES NOT MORE THAN 12 FT. X 12 FT. ON CENTER.
   B. PROVIDE BRACING WIRES AT LOCATIONS NOT MORE THAN 1/2 THE SPACING GIVEN IN 'A' ABOVE FROM EACH PERIMETER WALL AND AT THE EDGE OF VERTICAL CEILING OFFSETS.

2. SPLICES WILL NOT BE PERMITTED IN ANY HANGER WIRES.

3. PROVIDE TRAPEZE OR OTHER SUPPLEMENTAL SUPPORT MEMBERS AT OBSTRUCTIONS TO MAIN HANGER SPACING. PROVIDE ADDITIONAL HANGERS, STRUTS OR BRACES AS REQUIRED AT ALL CEILING BREAKS, SOFFITS OR DISCONTINUOUS AREAS. HANGER WIRES THAT ARE MORE THAN 1 IN 6 OUT OF PLUMB SHALL HAVE COUNTER-SLOPING WIRES.

4. FASTEN HANGER WIRES WITH NOT LESS THAN 3 TIGHT TURNS. FASTEN BRACING WIRES WITH 4 TIGHT TURNS. MAKE ALL TIGHT TURNS WITHIN A DISTANCE OF 11/2". HANGER OR BRACING WIRE ANCHORS TO THE STRUCTURE SHALL BE INSTALLED IN SUCH A MANNER THAT THE DIRECTION OF THE WIRE ALIGNS AS CLOSELY AS POSSIBLE WITH THE DIRECTION OF THE FORCES ON THAT WIRE.

5. SEPARATE ALL CEILING HANGING AND BRACING WIRES AT LEAST 6 INCHES FORM ALL UNBRACED DUCTS, PIPES, CONDUITS, ETC.

6. WHEN DRILLED-IN CONCRETE ANCHORS ARE USED IN REINFORCED CONCRETE FOR HANGER WIRES, 1 OUT OF 10 MUST BE FIELD TESTED FOR 200 POUNDS OF TENSION. WHEN DRILLED-IN CONCRETE ANCHORS ARE USED FOR BRACING WIRES, 1 OUT OF 2 MUST BE FIELD TESTED FOR 440 POUNDS OF TENSION. SHOT -IN ANCHORS IN CONCRETE ARE NOT PERMITTED FOR BRACING WIRE. IF ANY SHOT-IN OR DRILLED-IN ANCHOR FAILS, ALL ADJACENT ANCHORS MUST BE TESTED.
NOTES: DRILLED-IN OR SHOT-IN ANCHORS REQUIRE SPECIAL INSPECTION WHEN USED IN PRESTRESSED CONCRETE.

IDENTIFICATION STAMP
DIV. OF THE STATE ARCHITECT
APP: 03-121324 INC: A
REVIEWED FOR
SS ☐ FLS ☐ ACS ☑
DATE: 09/14/2022

OFFICE OF THE STATE FIRE MARSHAL
APPROVED FIRE AND PANIC ONLY
09/07/22
21-0233

Approval of this plan does not authorize or approve any omission or deviation from applicable regulations. Final approval is subject to field inspection. One set of approved plans shall be available on the project site at all times.

DGS GENERAL SERVICES
Department of General Services
Architecture & Engineering Sections
State of California
Real Estate Services Division
Project Management & Development Branch
707 Third Street, Suite 4-105
West Sacramento, California 95605

LICENSED ARCHITECT
JEREMY K. KHOO
C-35651
REN. 05/31/23
STATE OF CALIFORNIA

DMV
State of California
Department of Motor Vehicles

Issue

No.	Date	Description
1	9/2/22	

Project
SANTA MARIA FIELD OFFICE REPLACEMENT
2770 SANTA MARIA WAY
SANTA MARIA, CA 93455
SANTA MARIA COUNTY

DEPT OF MOTOR VEHICLES

Supervisor	Designed	Drawn
MG	GP	JK

DSA App No.	SFM Permit No.
03-121324	21-S-0233-CP-ER

Sheet Title
SUSPENDED GYP. BD. CEILING DETAILS

Project Number
DGS000000140725

Sheet Scale

Sheet Number
A563

Copyright © 2020, California Department of General Services- Real Estate Services Division

C:\Projects\000000000140725_ARC_Project Master_22_Jeremy.Khoo58F93.rvt
9/2/2022 12:24:15 PM

RELATIVE BORDER SCALE IN INCHES

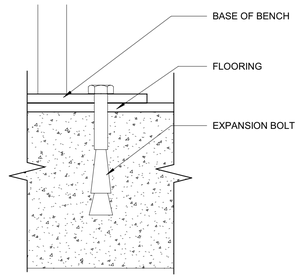

5 LOCKER ANCHORAGE — 6" = 1'-0"

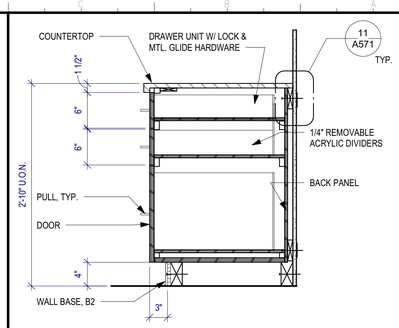

NOTE:
SEE SPECIFICATIONS FOR CABINET FINISHES AND HARDWARE

1 BASE CABINET W/ FILE — 1" = 1'-0"

NOTE:
SEE SPECIFICATIONS FOR CABINET FINISHES AND HARDWARE

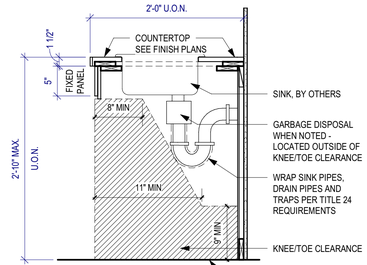

6 SINK CABINET — 1" = 1'-0"

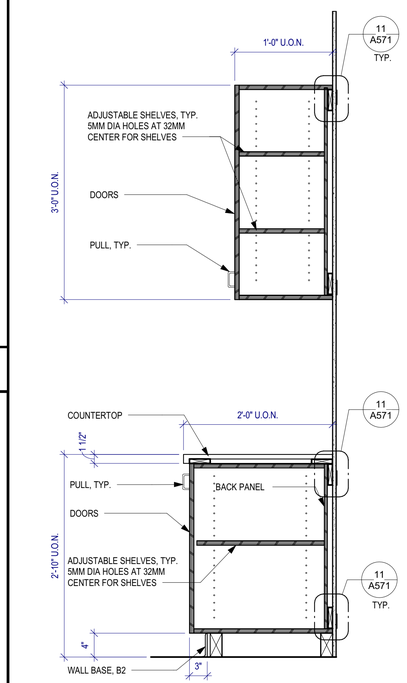

NOTE:
SEE SPECIFICATIONS FOR CABINET FINISHES AND HARDWARE

3 BASE & UPPER CABINET — 1" = 1'-0"

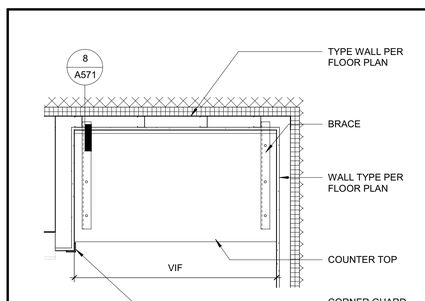

15 WRITING COUNTER — 3/4" = 1'-0"

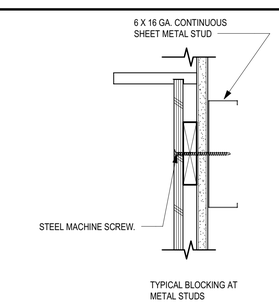

NOTE: EACH CABINET OR UNDIVIDED SPAN SHALL HAVE A MINIMUM OF 4 ANCHORAGE FASTENERS; 2 AT TOP AND 2 AT BOTTOM. MAXIMUM HORIZONTAL SPACING TO BE 16" O.C. OR 12" O.C. IF CABINET OVER 48"H. ANCHORAGE FASTENERS TO BE LOCATED WITHIN 2" OF THE OUTSIDE TOP OR BOTTOM AND WITHIN 2" OF THE OUTSIDE END

11 BLOCKING — 3" = 1'-0"

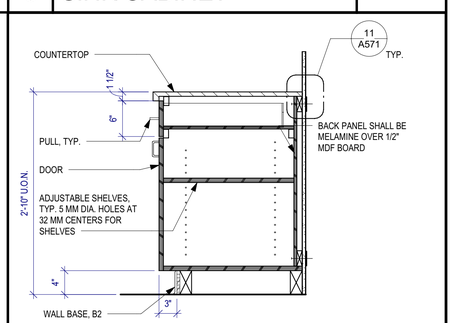

NOTE:
SEE SPECIFICATIONS FOR CABINET FINISHES AND HARDWARE

7 BASE W/ DRAWER — 1" = 1'-0"

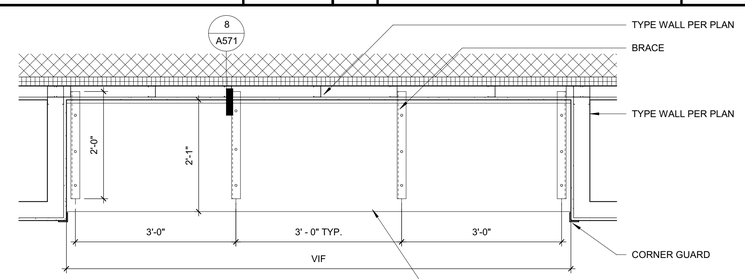

16 WRITING COUNTER AT PUBLIC AREA, PLAN — 3/4" = 1'-0"

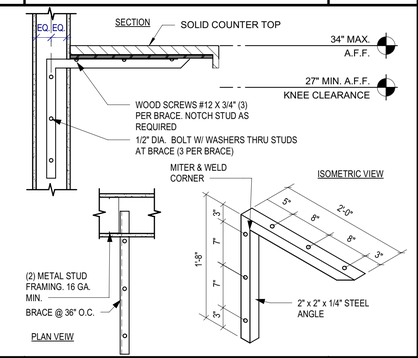

8 SUPPORT-STEEL — 1" = 1'-0"

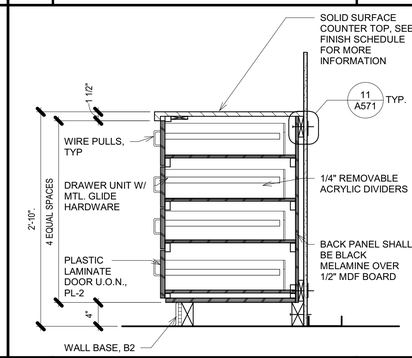

4 BASE W/ DRAWERS — 1" = 1'-0"

IDENTIFICATION STAMP
DIV. OF THE STATE ARCHITECT
APP: 03-121324 INC:
REVIEWED FOR
SS ☐ FLS ☐ ACS ☑
DATE: 09/14/2022

OFFICE OF THE STATE FIRE MARSHAL
APPROVED FIRE AND PANIC ONLY
09/07/22
21-0233
Approval of this plan does not authorize or approve any omission or deviation from applicable regulations. Final approval is subject to field inspection. One set of approved plans shall be available on the project site at all times.

DGS GENERAL SERVICES
Department of General Services
Architecture & Engineering Sections
State of California
Real Estate Services Division
Project Management & Development Branch
707 Third Street, Suite 4-105
West Sacramento, California 95605

LICENSED ARCHITECT
JEREMY K. KHOO
C-35651
REN. 05/31/23
STATE OF CALIFORNIA

DMV
State of California
Department of Motor Vehicles

Issue

No.	Date	Description
1	9/2/22	

Project
SANTA MARIA FIELD OFFICE REPLACEMENT
2770 SANTA MARIA WAY
SANTA MARIA, CA 93455
SANTA MARIA COUNTY

DEPT OF MOTOR VEHICLES

Supervisor	Designed	Drawn
MG	GP	JK

DSA App No. 03-121324
SFM Permit No. 21-S-0233-CP-ER

Sheet Title
DETAILS- CASEWORK

Project Number
DGS000000140725

Sheet Scale

Sheet Number
A571

Copyright © 2020, California Department of General Services- Real Estate Services Division

C:\Projects\000000000140725_ARC_Project Master_22_Jeremy.Khoo58F93.rvt
7/12/2022 12:01:48 PM
24 x 36
RELATIVE BORDER SCALE IN INCHES

PARTITION CONFIGURATION DIAGRAMS

FOURTH CHARACTER DESIGNATOR

*DESIGNATOR ALSO SIGNIFIES WALL TYPE - SEE APPLICABLE DETAILS

A

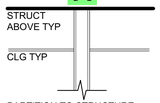

PARTITION TO STRUCTURE
GYP BD BOTH SIDES TO STRUCTURE

B

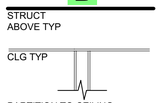

PARTITION TO CEILING
GYP BD BOTH SIDES CEILING

C

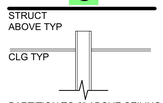

PARTITION TO 6" ABOVE CEILING
GYP BD BOTH SIDES TO 6" ABOVE CEILING

D

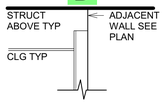

PARTITION TO 6" ABOVE CEILING
GYP BD ONE SIDE TO 6" ABOVE CEILING

E

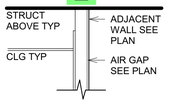

PARTITION TO STRUCTURE
GYP BD ONE SIDE TO 6" ABOVE CEILING

F

PARTIAL HEIGHT WALL

PARTITION SYMBOL DESIGNATORS

FIRST CHARACTER

DESIGNATOR	FIRE RATING
0	NON-RATED
1	1 HR
2	2 HR
3	3 HR
4	4 HR

SECOND CHARACTER

DESIGNATOR	CORE MATERIAL
C	CONCRETE
D	DETENTION WALL
E	EXISTING
F	FURRING - WOOD
H	STEEL HAT CHANNELS
M	MASONRY
S	STEEL STUD
T	SHAFTWALL STUD
W	WOOD STUD
Z	STEEL Z CHANNELS
-	-

THIRD CHARACTER

SIZES	DESIGNATOR	C	D	F	H	M	S	T	W	Z	-
	1			3/4"	3/4"		1 5/8"			7/8"	
	2		2"	1 1/2"	1 1/2"		2 1/2"			1 1/2"	
	3			2 1/2"	2 1/2"		3 5/8"	2 1/2"			
	4	4"					4"	4"	3 1/2"		
	6	6"				5 5/8"	6"	6"	5 1/2"		
	8	8"				7 5/8"	8"		7 1/4"		
	0	10"				9 5/8"	10"		9 1/4"		
	A	12"				11 5/8"	12"		11 1/4"		

PARTITION TYPE SYMBOL KEY

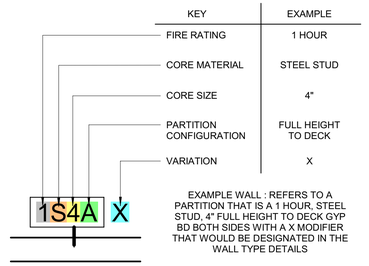

EXAMPLE WALL : REFERS TO A PARTITION THAT IS A 1 HOUR, STEEL STUD, 4" FULL HEIGHT TO DECK GYP BD BOTH SIDES WITH A X MODIFIER THAT WOULD BE DESIGNATED IN THE WALL TYPE DETAILS

FOURTH CHARACTER (WALL TYPE)

SEE PARTITION CONFIGURATION DIAGRAM TO THE LEFT

FIFTH CHARACTER

SEE WALL TYPES TO SEE FIFTH CHARACTER DESIGNATIONS AND VARIATION DEFINITTIONS

PARTITION PRIORITY LEGEND

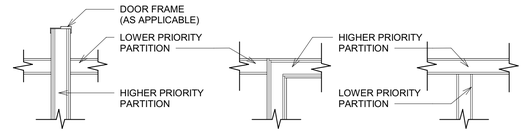

PARTITION PRIORITY LEGEND	PRIORITY
FOUR HOUR FIRE AND/OR SMOKE PARTITION	1ST (HIGHEST)
THREE HOUR FIRE AND/OR SMOKE PARTITION	2ND
TWO HOUR FIRE AND/OR SMOKE PARTITION	3RD
TWO HOUR FIRE PARTITION	4TH (SHARED)
TWO HOUR SHAFT WALL	4TH (SHARED)
ONE HOUR FIRE AND/OR SMOKE PARTITION	5TH
ONE HOUR FIRE PARTITION	6TH
NON-RATED PARTITION	7TH (LOWEST)

NOTE:
1. ALL PARTITIONS MAY NOT BE USED, SEE PLANS.
2. PARTITIONS WITH HIGHER ASSIGNED PRIORITY SHALL BE CONTINUOUS THROUGH INTERSECTIONS

1 WALL TYPES, PARTITION CONFIGURATION

NOT TO SCALE

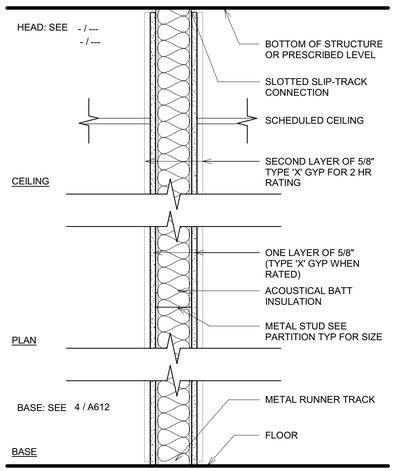

FULL HEIGHT PARTITION W/ ACOUSTICAL — UL V452

DESIGNATION				VARIATION
-				
-				
-	NON RATED WALL	1 LAYER GYP EACH SIDE	STC 45	
-	1 HOUR WALL	1 LAYER GYP EACH SIDE	STC 45	
-	2 HOUR WALL	2 LAYER GYP EACH SIDE	STC 52	

NOTE: 1. SEE GENERAL WALL TYPE NOTES ON THIS SHEET
2. SEE FLOOR PLANS FOR WALL RATINGS

6 WALL TYPE xSxA (METAL STUD)

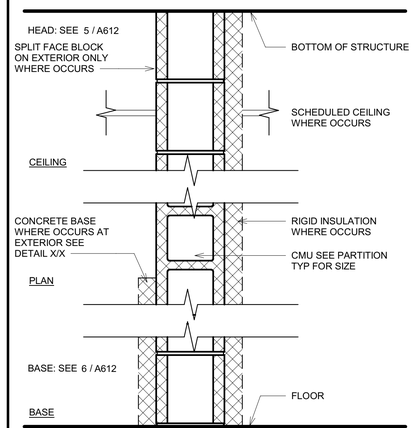

FULL HEIGHT CMU WALL — UL U905

DESIGNATION							VARIATION
-	SPLIT FACE W/ 8" VERT SCORE WITH 2" RIGID INSULATION 1 SIDE AND CONCRETE BASE OTHER SIDE						
A	SPLIT FACE W/ 8" VERT SCORE W/ 2" RIGID INSULATION 1 SIDE						
B	SPLIT FACE W/ 8" VERT SCORE W/ CONCRETE BASE 1 SIDE						
C	SMOOTH CMU TO 13'-4" WITH SPLIT FACE W/ 8" VERT SCORE ABOVE W/ 2" RIGID INSULATION 1 SIDE						
		4"	6"	8"	10"	12"	CMU WALL THICKNESS
-	2 HOUR WALL (HOLLOW)	40	42	44	46	48	EST. STC
-	4 HOUR WALL (FILLED)	44	48	52	55	57	

NOTE: 1. SEE GENERAL WALL TYPE NOTES ON THIS SHEET
2. SEE FLOOR PLANS FOR WALL RATINGS

5 WALL TYPE xMxA (CMU) 1 1/2" = 1'-0"

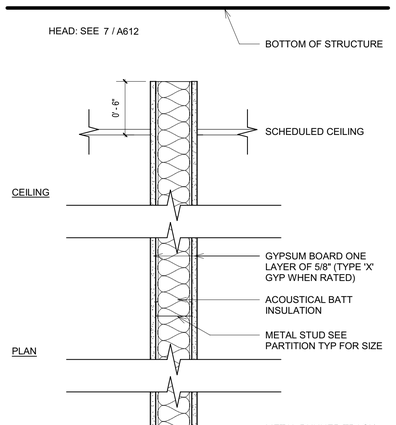

FULL HEIGHT PARTITION GYP TO 6" — UL V452

DESIGNATION				VARIATION
-	NON RATED WALL	1 LAYER GYP EACH SIDE	STC 35-40	
-	1 HOUR WALL	1 LAYER GYP EACH SIDE		
-	2 HOUR WALL	2 LAYER GYP EACH SIDE		

NOTE: 1. SEE GENERAL WALL TYPE NOTES ON THIS SHEET
2. SEE FLOOR PLANS FOR WALL RATINGS

4 WALL TYPE xSxC 1 1/2" = 1'-0"

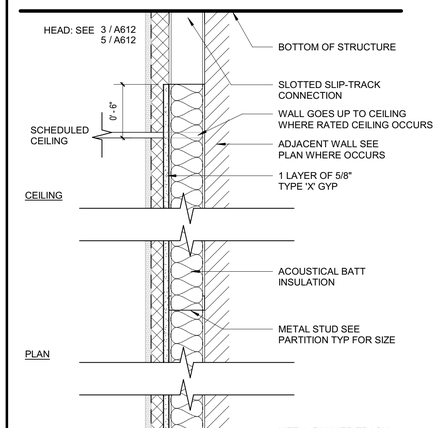

FURRED WALL MTL STUD

DESIGNATION				VARIATION
-	NON RATED WALL	1 LAYER GYP	NO AIR GAP	
A	NON RATED WALL	1 LAYER GYP	CHASE	
B	NON RATED WALL	2" RIGID INSULATION, 5/8" PLYWOOD, METAL PANEL		

WALL TYPE xSxE ON 2/A612

3 WALL TYPE xSxE FURRED 1 1/2" = 1'-0"

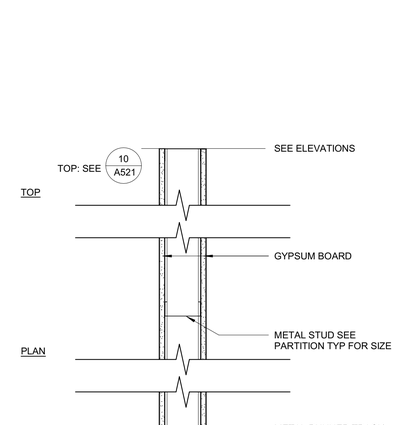

PARTIAL HEIGHT PARTITION

DESIGNATION		VARIATION

NOTE: 1. SEE GENERAL WALL TYPE NOTES ON THIS SHEET
2. SEE FLOOR PLANS FOR WALL RATINGS

2 WALL TYPE xSxF 1 1/2" = 1'-0"

RELATIVE BORDER SCALE IN INCHES

IDENTIFICATION STAMP
DIV. OF THE STATE ARCHITECT
APP: 03-121324 INC:
REVIEWED FOR
SS ☐ FLS ☐ ACS ☑
DATE: 09/14/2022

OFFICE OF THE STATE FIRE MARSHAL
APPROVED FIRE AND PANIC ONLY
09/07/22
21-0233
Approval of this plan does not authorize or approve any omission or deviation from applicable regulations. Final approval is subject to field inspection. One set of approved plans shall be available on the project site at all times.

DGS GENERAL SERVICES
Department of General Services
Architecture & Engineering Sections
State of California
Real Estate Services Division
Project Management & Development Branch
707 Third Street, Suite 4-105
West Sacramento, California 95605

LICENSED ARCHITECT
JEREMY K. KHOO
C-35651
REN. 05/31/23
STATE OF CALIFORNIA

DMV
State of California
Department of Motor Vehicles

Issue

No.	Date	Description
1	9/2/22	

Project
SANTA MARIA FIELD OFFICE REPLACEMENT
2770 SANTA MARIA WAY
SANTA MARIA, CA 93455
SANTA MARIA COUNTY
DEPT OF MOTOR VEHICLES

Supervisor	Designed	Drawn
MG	GP	JK

DSA App No. 03-121324
SFM Permit No. 21-S-0233-CP-ER

Sheet Title
WALL TYPES

Project Number
DGS000000140725

Sheet Scale

Sheet Number
A611

Copyright © 2020, California Department of General Services- Real Estate Services Division

C:\Projects\000000000140725_ARC_Project Master_22_Jeremy.Khoo58F93.rvt
9/2/2022 12:35:42 PM

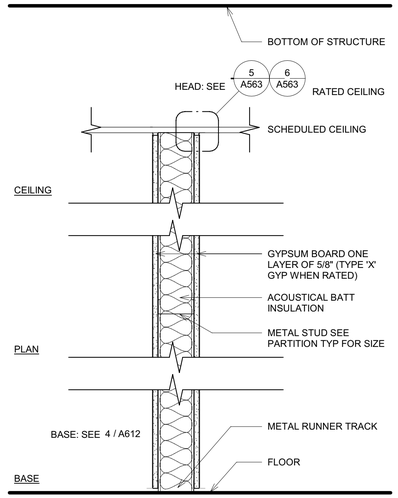

FULL HEIGHT PARTITION GYP TO CEILING — UL V452

DESIGNATION				VARIATION
-	NON RATED WALL	1 LAYER GYP EACH SIDE	STC 35-40	
-	1 HOUR WALL	1 LAYER GYP EACH SIDE		
-	2 HOUR WALL	2 LAYER GYP EACH SIDE		

NOTE: 1. SEE GENERAL WALL TYPE NOTES ON THIS SHEET
2. SEE FLOOR PLANS FOR WALL RATINGS

11 WALL TYPE xSxB — 1 1/2" = 1'-0"

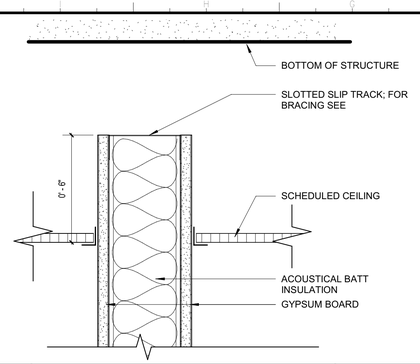

7 TYP. WALL HEAD xSxC — 3" = 1'-0"

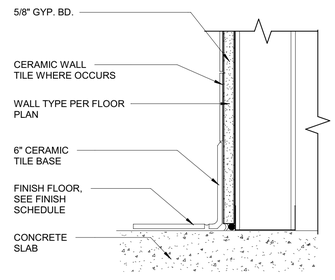

8 BASE OF WALL (TILE) — 3" = 1'-0"

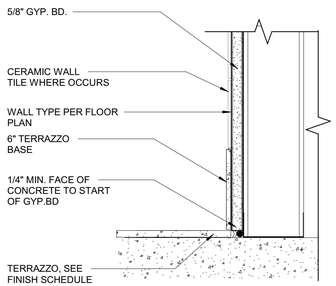

9 BASE OF WALL (TERRAZZO) — 3" = 1'-0"

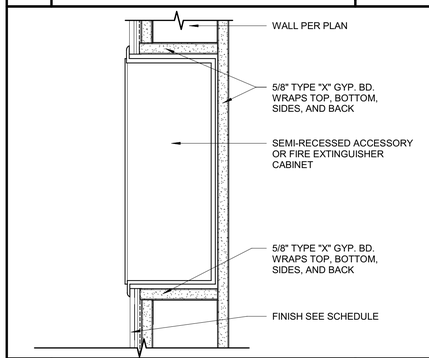

10 RECCESS ACCESS — 3" = 1'-0"

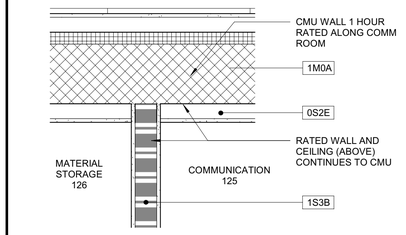

1 RATED INTERSECTION — 1" = 1'-0"

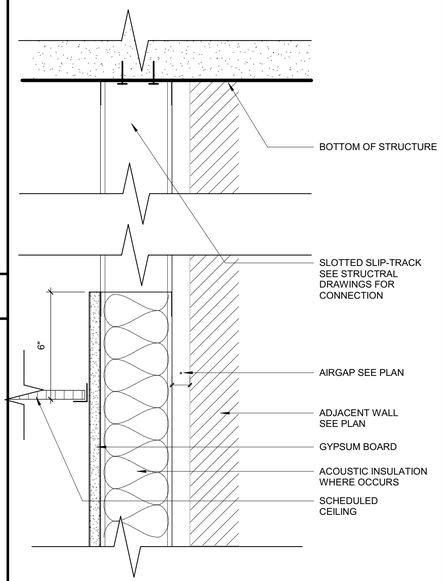

5 HEAD @ FURRED WALL — 3" = 1'-0"

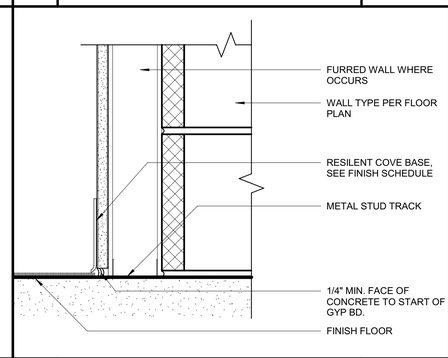

6 BASE OF WALL (CMU) — 3" = 1'-0"

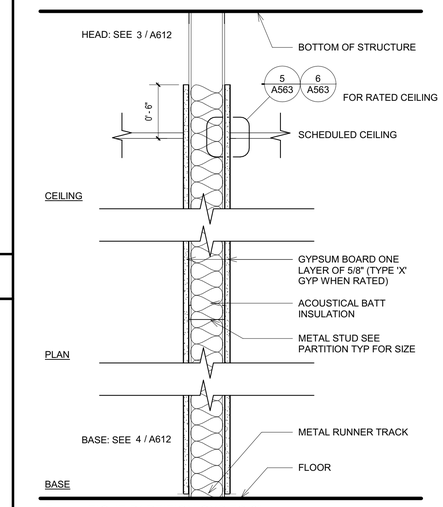

FULL HEIGHT PARTITION GYP TO 6" — UL V452

DESIGNATION				VARIATION
-	NON RATED WALL	1 LAYER GYP EACH SIDE	STC 35-40	
-	1 HOUR WALL	1 LAYER GYP EACH SIDE		
-	2 HOUR WALL	2 LAYER GYP EACH SIDE		

NOTE: 1. SEE GENERAL WALL TYPE NOTES ON THIS SHEET
2. SEE FLOOR PLANS FOR WALL RATINGS

2 WALL TYPE xSxE — 1 1/2" = 1'-0"

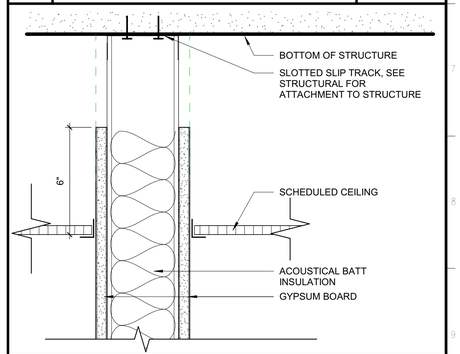

3 TYP. WALL HEAD xSxE — 3" = 1'-0"

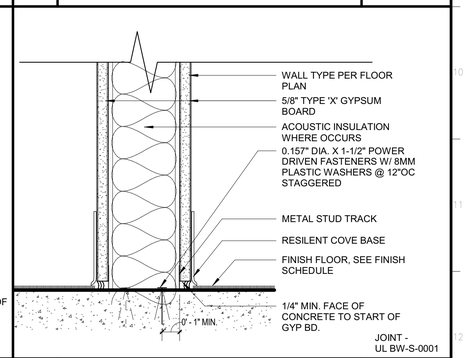

4 BASE OF WALL — 3" = 1'-0"

IDENTIFICATION STAMP
DIV. OF THE STATE ARCHITECT
APP: 03-121324 INC:
REVIEWED FOR
SS ☐ FLS ☐ ACS ☑
DATE: 09/14/2022

OFFICE OF THE STATE FIRE MARSHAL
APPROVED FIRE AND PANIC ONLY
09/07/22
21-0233
Approval of this plan does not authorize or approve any omission or deviation from applicable regulations. Final approval is subject to field inspection. One set of approved plans shall be available on the project site at all times.

GENERAL SERVICES
Department of General Services
Architecture & Engineering Sections
State of California
Real Estate Services Division
Project Management & Development Branch
707 Third Street, Suite 4-105
West Sacramento, California 95605

LICENSED ARCHITECT
JEREMY K. KHOO
C-35653
REN. 05/31/23
STATE OF CALIFORNIA

DMV
State of California
Department of Motor Vehicles

Issue

No.	Date	Description

Project
SANTA MARIA FIELD OFFICE REPLACEMENT
2770 SANTA MARIA WAY
SANTA MARIA, CA 93455
SANTA MARIA COUNTY

DEPT OF MOTOR VEHICLES

Supervisor	Designed	Drawn
MG	GP	JK

DSA App No. 03-121324
SFM Permit No. 21-S-0233-CP-ER

Sheet Title
WALL DETAILS

Project Number
DGS000000140725

Sheet Scale
Sheet Number
A612

Copyright © 2020, California Department of General Services, Real Estate Services Division

C:\Projects\000000000140725_ARC_Project Master_22_Jeremy.Khoo58F93.rvt
9/2/2022 1:15:18 PM

RELATIVE BORDER SCALE IN INCHES

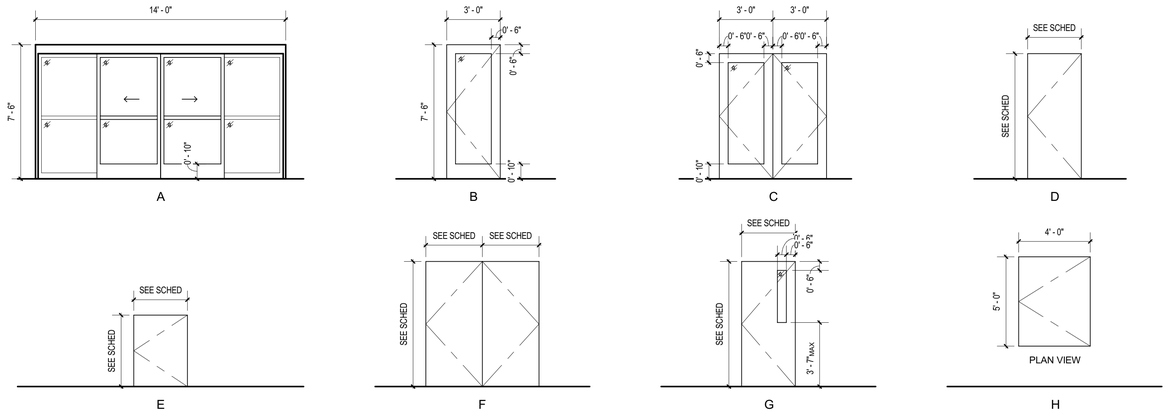

8 DOOR TYPES

1/4" = 1'-0"

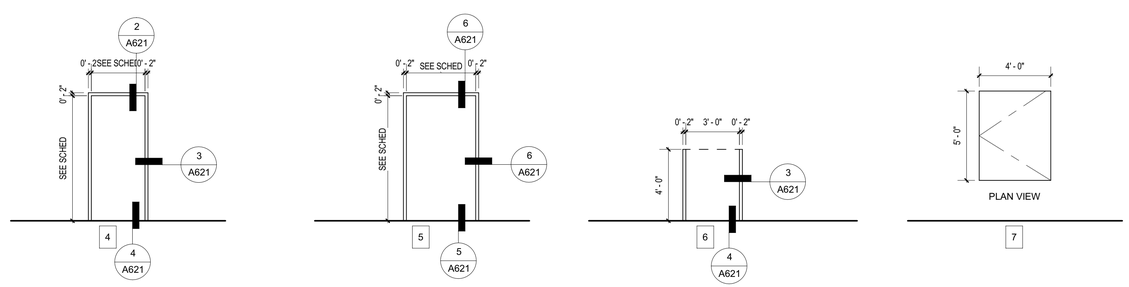

7 DOOR FRAME TYPES

1/4" = 1'-0"

DOOR SCHEDULE

Mark	DOOR SIZE WD	DOOR SIZE HGT	DOOR SIZE THK	DOOR MATL	DOOR GLZ	DOOR TYPE	FRAME TYPE	FRAME MATL	FRAME DETAIL HEAD	FRAME DETAIL JAMB	FRAME DETAIL SILL	FIRE RATING LABEL	HARDWARE SET NO	HARDWARE KEYSIDE ROOM NO	NOTES
100A	14' - 0"	7' - 6"	0' - 2"	Aluminum	Glass	A	-	ALUM			8/A504	-	HW 12	100	
100B	3' - 1"	7' - 0"		Aluminum	Glass	B	-	ALUM			8/A504 SIM	-	HW 12	100	
101A	6' - 0"	7' - 0"		Aluminum	Glass	C	-	ALUM			8/A504 SIM	-	HW 12	101	
101B	3' - 0"	4' - 0"	0' - 2"	WD		E	6	HM		3/A621	3/A521	-	HW 2	102	
104A	3' - 0"	7' - 0"	0' - 1 3/4"	WD		D	4	HM	2/A621	3/A621	8/A521	-	HW 1	103	
105A	3' - 0"	7' - 0"	0' - 1 3/4"	WD		D	4	HM	2/A621	3/A621	6/A521	-	HW 3	103	
106A	3' - 0"	7' - 0"	0' - 1 3/4"	WD		D	4	HM	2/A621	3/A621	8/A521	-	HW 1	103	
107A	3' - 0"	7' - 0"	0' - 1 3/4"	WD		D	4	HM	2/A621	3/A621	3/A521	-	HW 6	108	
108A	3' - 0"	7' - 0"	0' - 1 3/4"	WD	Glass	G	5	HM	6/A621	6/A621	8/A521	-	HW 9	102	
108B	3' - 0"	7' - 0"	0' - 1 3/4"	HM	Glass	G	5	HM	6/A621	6/A621	5/A621	-	HW 13	108	
109A	3' - 0"	7' - 0"	0' - 1 3/4"	WD		D	4	HM	2/A621	3/A621	3/A521	-	HW 6	108	
110A	3' - 0"	7' - 0"	0' - 1 3/4"	WD		D	4	HM	2/A621	3/A621	3/A521	-	HW 6	108	
115A	3' - 0"	7' - 0"	0' - 1 3/4"	HM	Glass	G	5	HM	6/A621	6/A621	5/A621	-	HW 14	114	
117A	3' - 0"	4' - 0"	0' - 2"	WD		E	6	HM		3/A621	3/A521	-	HW 2	102	
118A	3' - 0"	7' - 0"	0' - 1 3/4"	WD	Glass	G	4	HM	2/A621	3/A621	4/A621	-	HW 9	136	
119A	3' - 0"	7' - 0"		None			4	HM	2/A621	3/A621		-		120	
120A	3' - 0"	7' - 0"	0' - 1 3/4"	WD		D	4	HM	2/A621	3/A621	11/A521	-	HW 7	136	
122A	3' - 0"	7' - 0"	0' - 1 3/4"	WD		D	4	HM	2/A621	3/A621	11/A521	-	HW 6	136	
123A	3' - 0"	7' - 0"	0' - 1 3/4"	WD		D	4	HM	2/A621	3/A621	11/A521	-	HW 6	136	
124A	3' - 0"	7' - 0"	0' - 1 3/4"	WD		D	4	HM	2/A621	3/A621	11/A521	-	HW 8	124	
125A	3' - 0"	7' - 0"	0' - 1 3/4"	WD		D	4	HM	2/A621	3/A621	7/A521	20 MIN	HW 4	136	
126A	3' - 0"	7' - 0"	0' - 1 3/4"	WD		D	4	HM	2/A621	3/A621	4/A621	-	HW 3	126	
127A	3' - 0"	7' - 0"	0' - 1 3/4"	WD	Glass	G	4	HM	2/A621	3/A621	4/A621	-	HW 6	136	
128A	3' - 0"	7' - 0"	0' - 1 3/4"	WD	Glass	G	4	HM	2/A621	3/A621	15/A521	-	HW 3	136	
129A	4' - 0"	6' - 8"	0' - 1 3/4"	WD		D	4	HM	2/A621	3/A621	15/A521	-	HW 5	136	
129B	6' - 4"	7' - 0"	0' - 1 3/4"	HM		F	5	HM	6/A621	6/A621	5/A621	-	HW 17		
130A	3' - 8"	7' - 0"	0' - 1 3/4"	HM		G	5	HM	6/A621	6/A621	5/A621	-	HW 15	130	
131A	6' - 4"	7' - 0"	0' - 1 3/4"	HM		F	5	HM	6/A621	6/A621	5/A621	-	HW 16		
132A	3' - 0"	7' - 0"	0' - 1 3/4"	WD		D	4	HM	2/A621	3/A621	15/A521	-	HW 3	130	
133A	3' - 0"	7' - 0"	0' - 1 3/4"	WD		D	4	HM	2/A621	3/A621	4/A521	-	HW 1	135	
134A	3' - 0"	7' - 0"	0' - 1 3/4"	WD		D	4	HM	2/A621	3/A621	4/A521	-	HW 1	135	
137A	3' - 8"	7' - 0"	0' - 1 3/4"	HM		G	5	HM	6/A621	6/A621	5/A621	-	HW 10	118	
137B	3' - 0"	6' - 4"	0' - 2"	HM		D	6	HM	NONE	6/A621	5/A621	-	HW 15	137	
G122E	5' - 0"	5' - 8"	0' - 1 3/4"	HM		D	6	HM	NONE	6/A621	6/A621	-	HW 18		
R1	3' - 0"	4' - 0"	0' - 2"	HM		H									ROOF HATCH

1 DOOR SCHEDULE

NOT TO SCALE

ABBREVIATION DOOR SCHEDULE:

1,2	=	HARDWARE GROUP
WD	=	SOLID CORE WOOD
A, B	=	INTERIOR DOOR TYPE
1	=	INTERIOR FRAME TYPE
HM	=	HOLLOW METAL
NR	=	NON RATED
PTD	=	PAINTED
G	=	GLASS
GXXX	=	GATE FOR TRASH INCLOSURE
RX	=	GATE FOR ROOF ACCESS

NOTES:

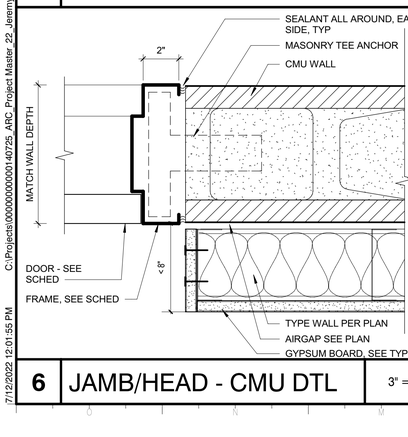

6 JAMB/HEAD - CMU DTL

3" = 1'-0"

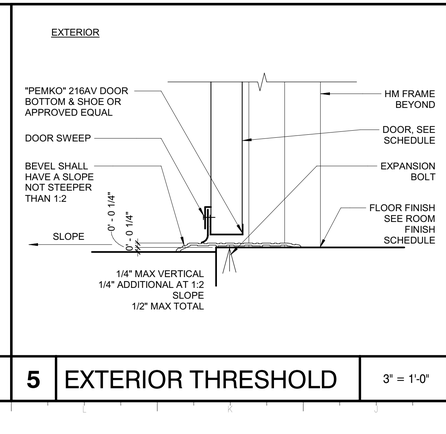

5 EXTERIOR THRESHOLD

3" = 1'-0"

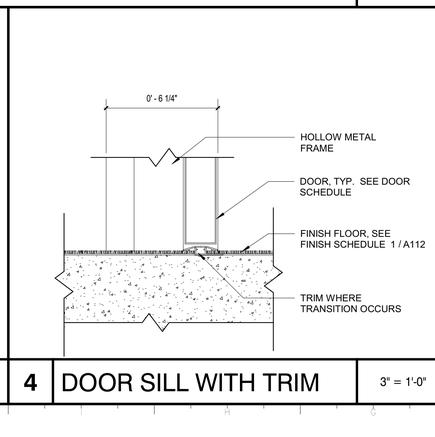

4 DOOR SILL WITH TRIM

3" = 1'-0"

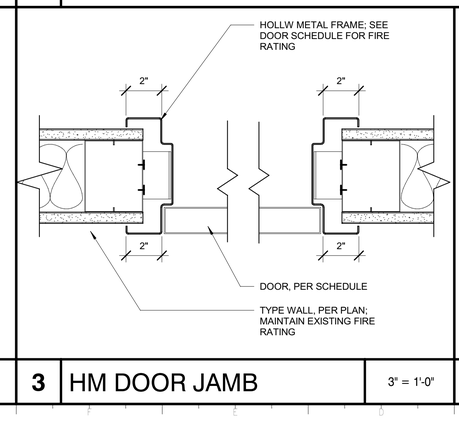

3 HM DOOR JAMB

3" = 1'-0"

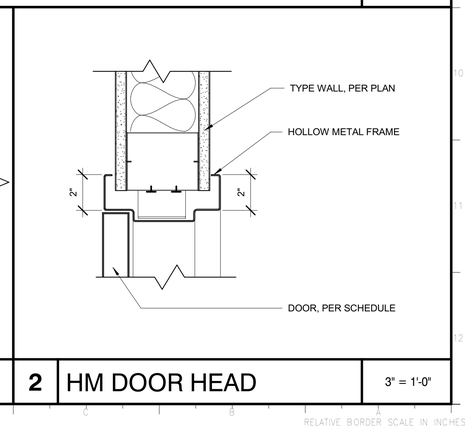

2 HM DOOR HEAD

3" = 1'-0"

IDENTIFICATION STAMP
DIV. OF THE STATE ARCHITECT
APP: 03-121324 INC:
REVIEWED FOR
SS ☐ FLS ☐ ACS ☑
DATE: 09/14/2022

OFFICE OF THE STATE FIRE MARSHAL
APPROVED FIRE AND PANIC ONLY
09/07/22
21-0233
Approval of this plan does not authorize or approve any omission or deviation from applicable regulations. Final approval is subject to field inspection. One set of approved plans shall be available on the project site at all times.

DGS GENERAL SERVICES

Department of General Services
Architecture & Engineering Sections
State of California
Real Estate Services Division
Project Management & Development Branch
707 Third Street, Suite 4-105
West Sacramento, California 95605

LICENSED ARCHITECT
JEREMY K. KHOO
C-35651
REN. 05/31/23
STATE OF CALIFORNIA

DMV
State of California
Department of Motor Vehicles

Issue

No.	Date	Description
1	9/2/22	

Project
SANTA MARIA FIELD OFFICE REPLACEMENT
2770 SANTA MARIA WAY
SANTA MARIA, CA 93455
SANTA MARIA COUNTY

DEPT OF MOTOR VEHICLES

Supervisor	Designed	Drawn
MG	GP	JK

DSA App No. 03-121324
SFM Permit No. 21-S-0233-CP-ER

Sheet Title
DOOR SCHEDULE

Project Number
DGS000000140725

Sheet Scale

Sheet Number
A621

Copyright © 2020, California Department of General Services: Real Estate Services Division

C:\Projects\000000000140725_ARC_Project Master_22_Jeremy.Khoo58F93.rvt
7/12/2022 12:01:55 PM

RELATIVE BORDER SCALE IN INCHES

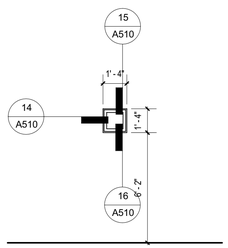

A

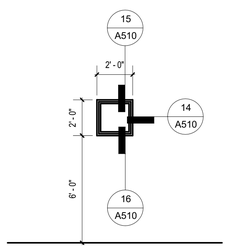

B

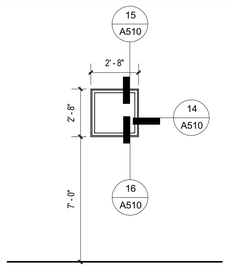

C

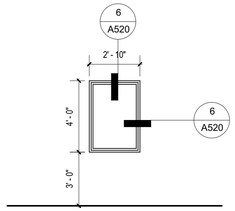

D

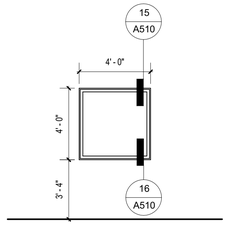

E

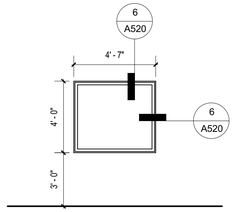

F

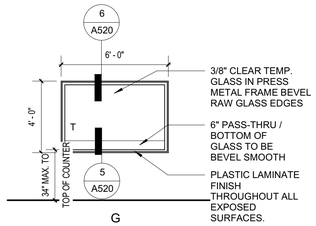

G

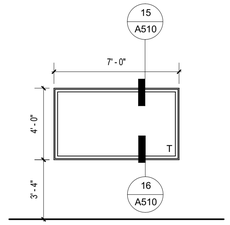

H

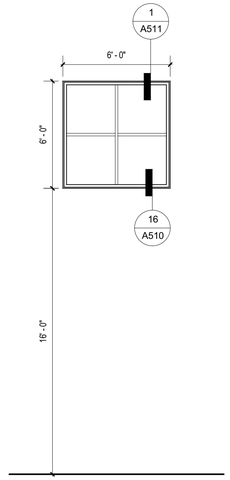

J

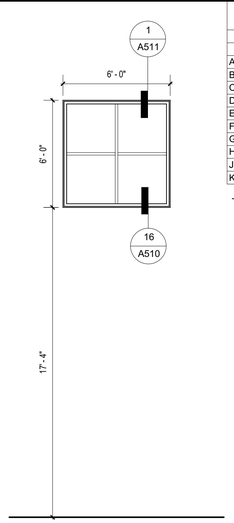

K

Window Schedule

Type Mark	Count	Height	Width	Sill Height
A	4	1' - 4"	1' - 4"	6' - 0"
B	4	2' - 0"	2' - 0"	6' - 8"
C	3	2' - 8"	2' - 8"	7' - 0"
D	1	4' - 0"	2' - 10"	3' - 0"
E	6	4' - 0"	4' - 0"	<varies>
F	1	4' - 0"	4' - 7"	3' - 0"
G	1	4' - 0"	6' - 0"	3' - 0"
H	1	4' - 0"	7' - 4"	3' - 0"
J	9	6' - 0"	6' - 0"	16' - 0"
K	6	6' - 0"	6' - 0"	17' - 4"

T - TEMPERED

1 WINDOW TYPES

1/4" = 1'-0"

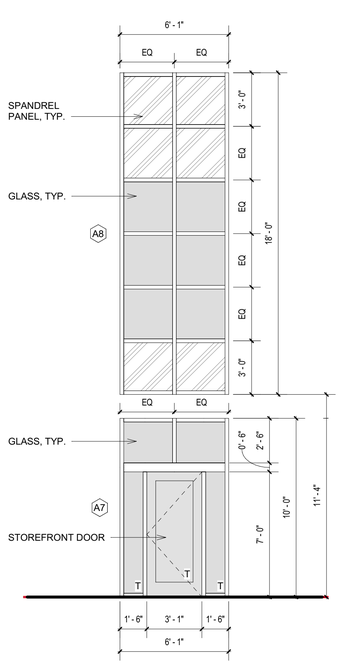

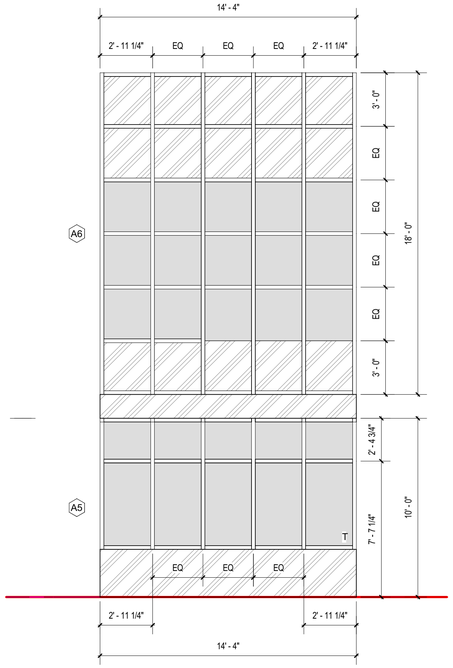

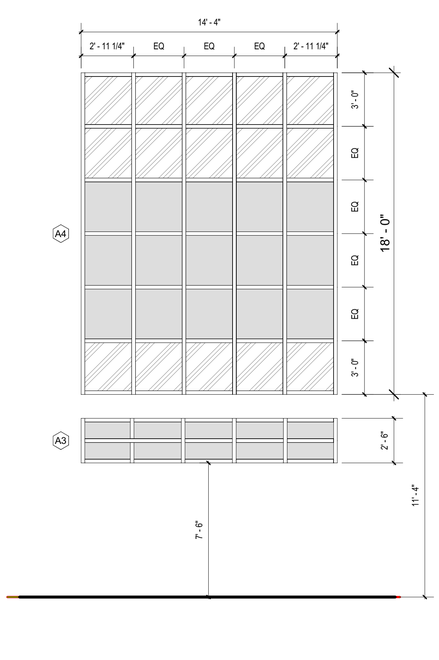

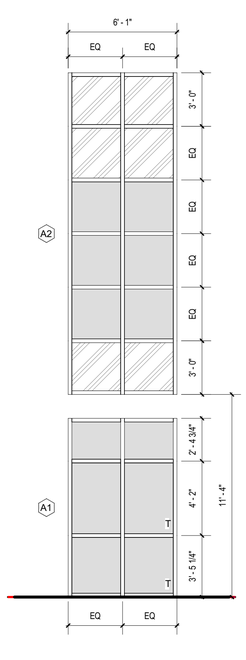

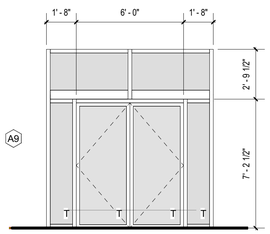

GENERAL NOTES

1. SEE SHEET A511 FOR INTEGRATED LOUVERED SHADES

2 STOREFRONT SYSTEMS

1/4" = 1'-0"

IDENTIFICATION STAMP
DIV. OF THE STATE ARCHITECT
APP: 03-121324 INC:
REVIEWED FOR
SS ☐ FLS ☐ ACS ☑
DATE: 09/14/2022

OFFICE OF THE STATE FIRE MARSHAL
APPROVED FIRE AND PANIC ONLY
09/07/22
21-0233
Approval of this plan does not authorize or approve any omission or deviation from applicable regulations. Final approval is subject to field inspection. One set of approved plans shall be available on the project site at all times.

DGS GENERAL SERVICES
Department of General Services
Architecture & Engineering Sections
State of California
Real Estate Services Division
Project Management & Development Branch
707 Third Street, Suite 4-105
West Sacramento, California 95605

LICENSED ARCHITECT
JEREMY K. KHOO
C-35651
REN. 05/31/23
STATE OF CALIFORNIA

DMV
State of California
Department of Motor Vehicles

Issue

No.	Date	Description
1	9/2/22	

Project
SANTA MARIA FIELD OFFICE REPLACEMENT
2770 SANTA MARIA WAY
SANTA MARIA, CA 93455
SANTA MARIA COUNTY

DEPT OF MOTOR VEHICLES

Supervisor	Designed	Drawn
MG	GP	JK

DSA App No. 03-121324
SFM Permit No. 21-S-0233-CP-ER

Sheet Title
WINDOW SCHEDULE

Project Number
DGS000000140725

Sheet Scale
Sheet Number
A631

Copyright © 2020, California Department of General Services - Real Estate Services Division

C:\Projects\000000000001140725_ARC_Project Master_22_Jeremy.Khoo58F93.rvt
7/12/2022 12:02:01 PM

RELATIVE BORDER SCALE IN INCHES

ROOM SCHEDULE

Number	Name	Floor Finish	Base Finish	Ceiling Finish	Wall Finish
100	MAIN ENTRANCE	TERRAZZO	TERRAZZO	ACT SYSTEM	PAINTED GYP w/ LAMINATE WAINSCOT
101	WEST ENTRY	TERRAZZO	TERRAZZO	GYP	PAINTED GYP w/ LAMINATE WAINSCOT
102	PUBLIC AREA	TERRAZZO	TERRAZZO	SEE RCP	PAINTED GYP w/ LAMINATE WAINSCOT
103	VESTIBULE	TERRAZZO	TERRAZZO	GYP	PAINTED GYP w/ LAMINATE WAINSCOT
104	PUBLIC WOMEN'S	TERRAZZO	TERRAZZO	GYP	TILE
105	JANITOR	CONCRETE	NONE	GYP	PAINTED GYP
106	PUBLIC MEN'S	TERRAZZO	TERRAZZO	GYP	TILE
107	OCCUPATIONAL LICENSING OFFICE	CARPET TILES	RUBBER BASE	ACT SYSTEM	PAINTED GYP
108	CORRIDOR	TERRAZZO	TERRAZZO	ACT SYSTEM	PAINTED GYP
109	DSO OFFICE	CARPET TILES	RUBBER BASE	ACT SYSTEM	PAINTED GYP
110	CHP OFFICER	CARPET TILES	RUBBER BASE	ACT SYSTEM	PAINTED GYP
111	TESTING	TERRAZZO	TERRAZZO	ACT SYSTEM	PAINTED GYP w/ LAMINATE WAINSCOT
112	LRE	CARPET TILES	RUBBER BASE	ACT SYSTEM	PAINTED GYP
113	TEST MONITOR	CARPET TILES	RUBBER BASE	ACT SYSTEM	PAINTED GYP
114	CONSULTATION AND CAMERA STATION	CARPET TILES	RUBBER BASE	SEE RCP	PAINTED GYP
115	COPY/MAIL CENTER	RAISED FLOOR SYSTEM	PAINTED WOOD	ACT SYSTEM	PAINTED GYP
116	PRODUCTION TERMINALS	RAISED FLOOR SYSTEM	RUBBER BASE	SEE RCP	PAINTED GYP
117	START	CARPET TILES	RUBBER BASE	SEE RCP	PAINTED GYP
118	EMPLOYEE ROOM	LINOLEUM RESILIENT FLOORING	VINYL	ACT SYSTEM	PAINTED GYP
119	SECURE STORAGE	CARPET TILES	RUBBER BASE	ACT SYSTEM	PAINTED GYP
120	CONTROL	CARPET TILES	RUBBER BASE	ACT SYSTEM	PAINTED GYP
121	LOCKERS	LINOLEUM RESILIENT FLOORING	VINYL	ACT SYSTEM	PAINTED GYP
122	TURN IN	CARPET TILES	RUBBER BASE	ACT SYSTEM	PAINTED GYP
123	PERSONNEL ROOM	CARPET TILES	RUBBER BASE	ACT SYSTEM	PAINTED GYP
124	MULTI-PURPOSE ROOM	CARPET TILES	RUBBER BASE	ACT SYSTEM	PAINTED GYP
125	COMMUNICATION	RAISED FLOOR SYSTEM	NONE	GYP (1-HOUR)	PAINTED GYP
126	MATERIAL STORAGE	LINOLEUM RESILIENT FLOORING	VINYL	ACT SYSTEM	PAINTED GYP
127	LACTATION	LINOLEUM RESILIENT FLOORING	VINYL	ACT SYSTEM	PAINTED GYP
128	JANITOR	CONCRETE	RUBBER BASE	GYP	PAINTED GYP
129	STORAGE	CONCRETE	NONE	GYP	PAINTED GYP
130	STAFF ENTRY	LINOLEUM RESILIENT FLOORING	VINYL	GYP	PAINTED GYP
131	ELECTRICAL	CONCRETE	NONE	GYP	PAINTED GYP
132	ROOF ACCESS	CONCRETE	NONE	OPEN TO STRUCTURE	PAINTED GYP
133	STAFF MEN'S	TILE	TILE	GYP	TILE
134	STAFF WOMEN'S	TILE	TILE	GYP	TILE
135	VESTIBULE	LINOLEUM RESILIENT FLOORING	VINYL	GYP	PAINTED GYP
136	CORRIDOR	LINOLEUM RESILIENT FLOORING	VINYL	GYP	PAINTED GYP
137	EMPLOYEE PATIO	CONCRETE	NONE	SEE RCP	PAINTED GYP
138	RAMP	CARPET TILES	RUBBER BASE	SEE RCP	PAINT
139	RAMP	CARPET TILES	RUBBER BASE	SEE RCP	PAINT

IDENTIFICATION STAMP
DIV. OF THE STATE ARCHITECT
APP: 03-121324 INC:
REVIEWED FOR
SS ☐ FLS ☐ ACS ☑
DATE: 09/14/2022

OFFICE OF THE STATE FIRE MARSHAL
APPROVED FIRE AND PANIC ONLY
09/07/22
21-0233
Approval of this plan does not authorize or approve any omission or deviation from applicable regulations. Final approval is subject to field inspection. One set of approved plans shall be available on the project site at all times.

DGS GENERAL SERVICES

Department of General Services
Architecture & Engineering Sections
State of California
Real Estate Services Division
Project Management & Development Branch
707 Third Street, Suite 4-105
West Sacramento, California 95605

LICENSED ARCHITECT
JEREMY K. KHOO
C-35651
REN. 05/31/23
STATE OF CALIFORNIA

DMV
State of California
Department of Motor Vehicles

Issue

No.	Date	Description
1	9/2/22	

Project
SANTA MARIA FIELD OFFICE REPLACEMENT
2770 SANTA MARIA WAY
SANTA MARIA, CA 93455
SANTA MARIA COUNTY

DEPT OF MOTOR VEHICLES

Supervisor	Designed	Drawn
MG	GP	JK

DSA App No. 03-121324
SFM Permit No. 21-S-0233-CP-ER

Sheet Title
ROOM FINISH SCHEDULE

Project Number
DGS000000140725

Sheet Scale

Sheet Number
A641

© Copyright © 2020, California Department of General Services- Real Estate Services Division

7/12/2022 12:02:03 PM C:\Projects\000000000140725_ARC_Project Master_22_Jeremy.Khoo58F93.rvt

RELATIVE BORDER SCALE IN INCHES

SYMBOL	DESCRIPTION	DETAIL REF
CFx (0'-0")	CF - T/FTG ELEVATION GIVEN	5 / S531
Fx (0'-0")	SPREAD FTG - T/FTG ELEVATION GIVEN	17 / S531
S S	STEP IN CF	18 / S532
	CONCRETE WALL	
CMU8	CMU WALL	2 / S541
WEJ	EXPANSION JOINT IN CMU WALL	3 / S542
	SHEAR OR BEARING WALL BELOW	
	SHEAR OR BEARING WALL ABOVE AND BELOW	
	SLOPE ARROW POINTING FROM HIGH TO LOW	
(0")	STEP IN T/SLAB OR FRAMING	14 / S531
	CHANGE IN SLOPE IN SLAB	
	CHANGE IN SLOPE AT VALLEY	
	CHANGE IN SLOPE AT RIDGE	
ELEV	SPOT ELEVATION MARKER	
	SMRF BEAM TO COL MOMENT CONNECTION	6 / S554
	STEEL BEAM NON-SMRF MOMENT CONNECTION	10 / S552 and 13 / S552
	OPNG IN DIAPHRAGM OR WALL	4 / S553
TYPE MARK WEIGHT	MEP EQUIPMENT, MAXIMUM WEIGHT GIVEN INCLUDES CURB	
F	FULL DEPTH SHEAR TAB	8 / S552
	BOTTOM FLANGE BRACING TO ADJACENT BEAM	12 / S552
W12X14 (13' - 4")	BEAM CALLOUT. DIMENSION GIVEN IS T/STL	
	STEEL COLUMN	18 / S551
D1	METAL DECK CALLOUT	10 / S553

12 SYMBOLS — NOT TO SCALE

ABBREVIATION

AB	Anchor Bolt
ABV	Above
ARCH	Architect
AFF	Above Finish Floor
BEV	Beveled
BLK	Block
BLW	Below
B/	Bottom of
BOT	Bottom
BT	Between
CF	Continuous Footing
CJ	Cold Joint
CLJ	Control Joint
CLR	Clear
CMU	Concrete Masonry Unit
CNTR	Center
CNJ	Construction Joint
CONC	Concrete
CONT	Continuous or Continuity
CONTR	Contractor
COORD	Coordinate
CJP	Complete Joint Penetration
CSK	Countersink
DCW	Demand Critical Weld
DF	Douglas Fir
DIA	Diameter
DL	Dead Load
do	Ditto
DWG	Drawing
(E)	Existing
EA	Each
EF	Each Face
EJ	Expansion Joint
EL	Elevation
EN	Edge Nailing
EOS	Edge of Slab
EQ	Equal
ES	Each Side
EW	Each Way
EWEF	Each Way Each Face
F/	Face of
FB	Flat Bar
FC	Framing Clip
FF	Finish Floor of Face of Fascia
FS	Far Side
FTG	Footing
GA	Gauge or Gage
GALV	Galvanized
GLB	Glued Laminated Beam
HB	Headed Bolt
HD	Holddown
HDR	Header
HNGR	Hanger
HSB	High Strength Bolt
HSS	Hollow Structural Section
HT	Height
ICC	International Code Council
JH	Joist Hanger
K	Kips (1000 LBS)
LAG	Lag Bolt
LL	Live Load
LLH	Long Leg Horizontal
LLV	Long Leg Vertical
LW	Light Weight
LWIC	Light Weight Insulating Conc
MB	Machine Bolt
MFR	Manufacturer
(N)	New
NIC	Not in Contract
NS	Near Side
NTS	Not to Scale
NW	Normal Weight
OC	On Center
OH	Opposite Hand
OSB	Oriented Strand Board
P	Axial Force
PJP	Partial Joint Penetration
PL	Plate
PLY	Plywood Sheathing
PT	Pressure Treated
RWD	Redwood
REINF	Reinforcing Steel
RH	Roof Hatch
SC	Slip Critical
SCHED	Schedule
SIM	Similar
SLRS	Seismic Load Resisting System
SMRF	Steel Moment Resisting Frame
SMS	Sheet Metal Screw
SOG	Slab on Grade
SP	Structural Panel
SQ	Square
STF	Stiffener
STL	Steel
STGR	Staggered
T&B	Top & Bottom
T&G	Tongue & Groove
THRD	Threaded
TN	Toe Nail
T/	Top of
UNO	Unless Noted Otherwise
W/	With
W/O	Without
WEJ	Wall Expansion Joint
WP	Work Point
WS	Wood Screw
WWF	Welded Wire Fabric
CL	Centerline
WF	Wide Flange
#	Pounds

6 ABBREVIATIONS — NOT TO SCALE

DESIGN CRITERIA

1. CODES AND STANDARDS
   - A. 2019 California Building Code (CBC)
   - B. ACI 318-14 (CONCRETE)
   - C. 2016 AISC ASD&LRFD (15 edition) (STEEL)
   - D. TMS 402/602-16 (CMU)
2. VERTICAL LOADS (LIVE LOADS ARE REDUCED WHERE PERMITTED BY CODE)
   - A. ROOF DEAD LOAD = 24 psf
   - B. ROOF LIVE LOAD = 20 psf REDUCIBLE
   - C. ROOF SNOW LOAD = 0 psf
   - D. FLOOR DEAD LOAD = 80 psf
   - E. FLOOR LIVE LOAD = 80 psf
   - F. FLOOR PARTITION LOAD = 20 psf
3. LATERAL LOADS
   - A. WIND
     - a. BASIC WIND SPEED: V = 91 mph
     - b. EXPOSURE = C
     - c. I_w = 1.0
   - B. SEISMIC:
     - a. RISK CATEGORY: II
     - b. I_e = 1.0
     - c. S_S =0.938g
     - d. S_1 =0.351g
     - e. SITE CLASS: D
     - f. SEISMIC DESIGN CATEGORY D
     - g. F_A =1.125
     - h. F_V =1.949
     - i. S_{DS} =0.704g
     - j. S_{D1} =0.456g
     - k. SEISMIC FORCE RESISTING SYSTEM(S): SPECIAL REINFORCED MASONRY SHEAR WALLS (BEARING WALL SYSTEM)
     - l. R = 5.0
     - m. OHMEGA$_0$ = 2.5
     - n. C_D = 3.5
     - o. ANALYSIS PROCEDURE: EQUIVALENT LATERAL FORCE PROCEDURE (ASCE 7 SECTION 12.8)
     - p. C_S =0.148 (UN-FACTORED)
     - q. DESIGN BASE SHEAR: 334 KIPS
4. SOILS VALUES ALLOWABLE SOILS PRESSURE
   - A. DL 3,000 psf
   - B. DL+LL 3,000 psf
   - C. DL+LL+E/1.4 4,000 psf
   - D. ACTIVE EARTH PRESSURE = 35 pcf
   - E. PASSIVE EARTH PRESSURE = 300 pcf
   - F. COEFFICIENT OF FRICTION = 0.30
   - G. FOOTING MINIMUM DEPTH = 12" BELOW LOWEST ADJACENT EXTERIOR GRADE

8 DESIGN CRITERIA — NOT TO SCALE

1. INTERPRETATION OF DRAWINGS AND SPECIFICATIONS
   - A. FOR CONVENIENCE, SPECIFICATIONS HAVE BEEN PREPARED FOR THIS PROJECT AND ARE ARRANGED IN SEVERAL SECTIONS, BUT SUCH SEPARATION SHALL NOT BE CONSIDERED AS THE LIMITS OF THE WORK REQUIRED OF ANY SEPARATE TRADE. THE TERMS AND CONDITIONS OF SUCH LIMITATIONS ARE WHOLLY BETWEEN THE CONTRACTOR AND HIS SUBCONTRACTORS.
   - B. IN GENERAL, THE WORKING DETAILS WILL INDICATE DIMENSIONS, POSITION AND KIND OF CONSTRUCTION, AND THE SPECIFICATIONS, QUALITIES AND METHODS. ANY WORK INDICATED ON THE WORKING DETAILS AND NOT MENTIONED IN THE SPECIFICATIONS, OR VICE VERSA, SHALL BE FURNISHED AS THOUGH FULLY SET FORTH IN BOTH. WORK NOT PARTICULARLY DETAILED, MARKED OR SPECIFIED, SHALL BE THE SAME AS SIMILAR PARTS THAT ARE DETAILED, MARKED OR SPECIFIED. IF CONFLICTS OCCUR ON DRAWINGS AND/OR SPECIFICATIONS, THE MOST EXPENSIVE MATERIALS OR METHODS WILL PREVAIL.
   - C. SHOULD AN ERROR APPEAR IN THE WORKING DETAILS OR SPECIFICATIONS OR IN WORK DONE BY OTHERS AFFECTING THIS WORK, THE CONTRACTOR SHALL NOTIFY THE STATE AT ONCE AND IN WRITING. IF THE CONTRACTOR PROCEEDS WITH THE WORK SO AFFECTED WITHOUT HAVING GIVEN SUCH WRITTEN NOTICE AND WITHOUT RECEIVING THE NECESSARY APPROVAL, DECISION OR INSTRUCTIONS IN WRITING FROM THE STATE, THEN HE SHALL HAVE NO VALID CLAIM AGAINST THE STATE, FOR THE COST OF SO PROCEEDING AND SHALL MAKE GOOD ANY RESULTING DAMAGE OR DEFECT. NO VERBAL APPROVAL, DECISION, OR INSTRUCTION SHALL BE VALID OR BE THE BASIS FOR ANY CLAIM AGAINST THE STATE. THE FOREGOING INCLUDES TYPICAL ERRORS IN THE SPECIFICATIONS OR NOTATIONAL ERRORS IN THE WORKING DETAILS WHERE THE INTERPRETATION IS DOUBTFUL OR WHERE THE ERROR IS SUFFICIENTLY APPARENT AS TO PLACE A REASONABLY PRUDENT CONTRACTOR ON NOTICE THAT, SHOULD HE ELECT TO PROCEED, HE IS DOING SO AT HIS OWN RISK.
2. CONSTRUCTION SHALL CONFORM TO ALL APPLICABLE CODES AND REGULATIONS.
3. SAFETY NOTE:
   - A. IT IS THE CONTRACTORS RESPONSIBILITY TO COMPLY WITH THE PERTINENT SECTIONS, AS THEY APPLY TO THIS PROJECT, OF THE "CONSTRUCTION SAFETY ORDERS" ISSUED BY THE STATE OF CALIFORNIA LATEST EDITION, AND ALL OSHA REQUIREMENTS.
   - B. THE STATE DOES NOT ACCEPT ANY RESPONSIBILITY FOR THE CONTRACTOR'S FAILURE TO COMPLY WITH THESE REQUIREMENTS.
   - C. THE CONTRACTOR SHALL BE RESPONSIBLE FOR ADEQUATE DESIGN AND CONSTRUCTION OF ALL FORMS AND SHORING REQUIRED. CONTRACTOR SHALL PROVIDE ADEQUATE STAYS AND BRACING OF ALL FRAMING UNTIL ALL ELEMENTS OF THE DESIGN HAVE BEEN INCORPORATED INTO THE PROJECT.
4. THE CONTRACTOR SHALL NOTIFY THE STATE WHERE A CONFLICT OR DISCREPANCY OCCURS BETWEEN THE STRUCTURAL DRAWINGS AND ANY OTHER PORTION OF THE CONTRACT DOCUMENTS OR EXISTING FIELD CONDITIONS. SUCH NOTIFICATION SHALL BE GIVEN IN DUE TIME SO AS NOT TO AFFECT THE CONSTRUCTION SCHEDULE. IN CASE OF A CONFLICT BETWEEN STRUCTURAL DRAWINGS AND SPECIFICATIONS THE MORE RESTRICTIVE CONDITION SHALL TAKE PRECEDENCE UNLESS WRITTEN APPROVAL HAS BEEN GIVEN FOR THE LEAST RESTRICTIVE. CONTRACTOR SHALL VERIFY ALL DIMENSIONS WITH ARCHITECTURAL PRIOR TO COMMENCING ANY WORK.
5. WHERE NO SPECIFIC DETAIL IS SHOWN, THE CONSTRUCTION SHALL BE IDENTICAL OR SIMILAR TO THAT INDICATED FOR LIKE CASES OF CONSTRUCTION ON THIS PROJECT. SHOULD THERE BE ANY QUESTION, CONTACT THE STATE PRIOR TO PROCEEDING.
6. WHEN CONSTRUCTION ATTACHES TO AN EXISTING BUILDING, A COMPLETE SET OF DRAWINGS OF THE EXISTING BUILDING SHALL BE KEPT ON THE JOB SITE.
7. ANY PROPOSED SUBSTITUTIONS FOR STRUCTURAL MEMBERS, HARDWARE OR DETAILS SHALL BE SUBMITTED TO THE STATE FOR REVIEW PRIOR TO USE.
8. DO NOT SCALE DRAWINGS. CONTACT THE STATE FOR ANY DIMENSIONS NOT SHOWN.
9. THE CONTRACTOR SHALL NOTIFY THE STATE A MINIMUM OF TWO WORKING DAYS PRIOR TO PROCEEDING WITH THE FOLLOWING WORK:
   - A. POURING OF ANY CONCRETE
   - B. ERECTION OF ANY STEEL FRAMING
   - C. PLACING OF ANY STRUCTURAL SHEATHING AND/OR DECKING
   - D. COVERING OF ANY STRUCTURAL SHEATHING

4 GENERAL NOTES — NOT TO SCALE

IDENTIFICATION STAMP
DIV. OF THE STATE ARCHITECT
APP: 03-121324 INC:
REVIEWED FOR
SS ☐ FLS ☐ ACS ☑
DATE: 09/14/2022

OFFICE OF THE STATE FIRE MARSHAL
APPROVED FIRE AND PANIC ONLY
09/07/22
21-0233
Approval of this plan does not authorize or approve any omission or deviation from applicable regulations. Final approval is subject to field inspection. One set of approved plans shall be available on the project site at all times.

DGS GENERAL SERVICES
Department of General Services
Architecture & Engineering Sections
State of California
Real Estate Services Division
Project Management & Development Branch
707 Third Street, Suite 4-105
West Sacramento, California 95605

REGISTERED PROFESSIONAL ENGINEER
MARSHALL ROBERTS
No. S-6173
STRUCTURAL
STATE OF CALIFORNIA
1/21/22

DMV
State of California
Department of Motor Vehicles

Issue		
No.	Date	Description
1	9/2/22	

Project
SANTA MARIA FIELD OFFICE REPLACEMENT
2770 SANTA MARIA WAY
SANTA MARIA, CA 93455
SANTA BARBARA COUNTY

MOTOR VEHICLES

Supervisor	Designed	Drawn
J.DIGIORGIO	M.ROBERTS	M.ROBERTS

DSA App No. | SFM Permit No.

Sheet Title
STRUCTURAL GENERAL NOTES

Project Number
DGS000000140725

Sheet Scale
Sheet Number
S001

Copyright © 2020, California Department of General Services: Real Estate Services Division

C:\Projects\DGS000000140725_STR_Marshall Roberts.rvt
1/21/2022 2:26:39 PM

RELATIVE BORDER SCALE IN INCHES

TESTS AND INSPECTIONS
TESTS AND INSPECTIONS SHALL BE PROVIDED BY A QUALIFIED TESTING AGENCY AS REQUIRED BELOW AND SHALL CONFIRM TO THE REQUIREMENTS OF THE CBC LISTED. THE FOLLOWING ITEMS REQUIRE STRUCTURAL TESTS. FOR SPECIFIC REQUIREMENTS OF STRUCTURAL TESTS, SEE SPECIFICATIONS AND GENERAL NOTES.

1. CONCRETE REINFORCEMENT
2. CAST-IN-PLACE CONCRETE
3. SHOTCRETE
4. POST-INSTALLED ANCHORS
5. GROUTED DOWELS
6. CONCRETE MASONRY UNITS
7. STRUCTURAL STEEL MATERIALS AND FABRICATION
8. WELDING: STRUCTURAL STEEL AND REINFORCING STEEL
9. STEEL DECKING
10. COLD FORMED METAL FRAMING

THE FOLLOWING ITEMS REQUIRE SPECIAL INSPECTIONS BY A CERTIFIED SPECIAL INSPECTOR IN ACCORDANCE WITH CBC 1704 AND 1705.

SPECIAL INSPECTIONS AND TESTS - OPEN WEB STEEL JOISTS

TYPE	CONT. INSPECTION	PERIODIC INSPECTION	REFERENCED STANDARD
End connections - welded or bolted	-	X	CBC 2207.1
Bridging	-	X	

SPECIAL INSPECTIONS AND TESTS - SOILS

TYPE	CONT. INSPECTION	PERIODIC INSPECTION
Verify materials below shallow foundations are adequate to achieve the design bearing capacity	-	X
Verify excavations are extended to proper depth and have reached proper material	-	X
Perform classification and testing of compacted fill materials	-	X
Verify use of proper materials, densities and lift thicknesses during placement and compaction of compacted fill	X	-
Prior to placement of compacted fill, inspect subgrade and verify that site has been prepared peoperly.	-	X

SPECIAL INSPECTIONS AND TESTS - STRUCTURAL STEEL

VERIFICATION AND INSPECTION	CONT. INSPECTION	PERIODIC INSPECTION	REFERENCED STANDARD
Material verification of high-strength bolts, nuts, and washers			
Identification markings to conform to ASTM standards specified in the approved construction documents	-	X	AISC 360 Sec A3.3 and applicable ASTM standards
Manufacturer's certificat of compliance required	-	X	
Inspection of high-strength bolting			
Snug-tight joints	-	X	AISC 360 Sec M2.5
Slip-critical connections	X		
Pretensioned and slip-critical joints using turn-of-nut with matchmarking, twist-off bolt or direct tension indicator methods of installation	X	-	
Material verification of structural steel and cold-formed deck			
For structural steel, identification markings to conform to AISC 360	-	X	AISC 360 Sec A3.1H
For other steel, identification markings to conform to ASTM standards specified in the approved construction documents	-	X	Applicable ASTM standards
Manufacturer's certifified mill test reports	-	-	ASTM A6 or ASTM A568
Material verification of weld filler materials			
Identification markings to conform to AWS specification in the approved construction documents	-	-	AISC 360 Sec A3.5 applicable AWS documents
Manufacturer's certificate of compliance...	-	X	
Inspection of welding			
Structural steel and cold-formed steel deck			
Complete and partial penetration groove welds	X	-	AWS D1.1; CBC 1705.1
Multi-pass fillet welds	X	-	
Single-pass fillet welds > 5/16"	X	-	
Plug and slot welds	X	-	
Single-pass fillet welds <= 5/16"	-	X	
Floor and roof deck welds	-	X	AWS D1.3
Reinforcing steel			
Verification of weldability of reinforcing steel other than ASTM A706	-	X	AWS D1.4; ACI 318: 3.5.2
Reinforcing steel resisting flexural and axial forces in intermediate and special moment frames, and boundary elements of special reinforced concrete shear walls and shear reinforcement	X	-	
Shear reinforcement	X	-	
Other reinforcing steel	-	X	
Inspection of steel frame joint details for compliance with approved construction documents			
Details such as bracing and stiffening	-	X	CBC 1705.2.1
Member locations	-	X	
Application of joint details at each connection	-	X	

SPECIAL INSPECTIONS AND TESTS - CONCRETE

TYPE	CONT. INSPECTION	PERIODIC INSPECTION	REFERENCED STANDARD
Inspect concrete reinforcement, including prestressing tendons, and verify placement	-	X	ACI 318: CH 20, 25.2, 25.3, 26.61-26.63; CBC 1908.4
Rebar welding: verify weldability of reinforcing bars other than ASTM A706	-	X	AWS D1.4; ACI 318 26.6.4
Rebar welding: inspect single-pass fillet welds, maximum 5/16"	-	X	
Rebar welding: inspect all other welds	X	-	
Inspect concrete anchors cast in concrete	-	X	ACI 318: 17.8.2
Inspect adhesive anchors installed in horizontally or upwarkly inclined orientations to resist sustained tension loads	X	-	ACI 318: 17.8.2.4
Inspect post-installed mechanical anchors not defined above	-	X	ACI 318: 17.8.2
Verify use of required deisgn mix	-	X	ACI 318: Ch. 19, 26.4.3, 26.4.4; CBC: 1904.1, 1904.2, 1908.2, 1908.3
Prior to concrete placement, fabricate specimens for strength tests, perform slump and air content tests, and determine the temperature of the concrete	X	-	ASTM C172; ASTM C31; ACI 318: 26.4, 26.12; CBC 1908.10
Inspect concrete and shotcrete placement for proper application techniques	X	-	ACI 318: 26.5; CBC: 1908.6, 1908.7, 1908.8
Verify maintenance of specified curing temperature and techniques	-	X	ACI 318: 26.5.3-26.5.5; CBC 1908.9
Inspect prestressed concrete for application of prestressign forces	X	-	ACI 318: 26.10
Inspect prestressed concrete for grouting of bonded prestressing tendons	X	-	
Inspect erection of precast concrete members	-	X	ACI 318: 26.8
Verify in-situ concrete strength, prio to stressing o ftendons in post-tensioned concrete and prior to removal of shores and forms from beams and structural slabs	-	X	ACI 318: 26.11.2
Inspect formwork for shape, location, and dimensions of the concrete member being formed	-	X	ACI 318: 26.11.1.2(b)

SPECIAL INSPECTIONS AND TESTS - CONCRETE MASONRY UNITS LEVEL 2

RISK CATEGORIES I, II, III	FREQUENCY (a)	REFERENCE FOR CRITERIA	
VERIFICATION AND INSPECTION	LEVEL 2	TMS 402	TMS 602
As masonry construction begins, verify that the following are in compliance:			
Proportions of site-prepared mortar	P		Art 2.1, 2.6A, 2.6C
Grade, type and size of reinforcement, connectors, anchor bolts, and prestrssing tendons and anchorages.	P		Art 3.4, 3.6A
Poperties of thin-bed mortar for AAC masonry	C(b) / P(c)		Art 2.1 C.1
Sample panel construction	P		Art 1.6D
Prior to grouting, verify that the following are in compliance:			
Grout space	P		Art 3.2D, 3.2F
Placement of reinforcement, connectors, and anchor bolts	P	Sec 6.1, 6.3.1, 6.3.6, 6.3.7	Art 3.2E, 3.4,
Verify during construction			
Materials and procedures with the approved submittals	P		Art 1.5
Placement of masonry units and mortar joint construction	P		Art 3.3B
Size and location of structural members	P		Art 3.3F
Type, size, and location of anchors, including other details of anchorage of masonry to structural members, frames, or other construction	P	Sec 1.2.1(e), 6.2.1, 6.3.1	
Welding of reinforcement	C	Sec 6.1.6.1.2	
Preparations, construction, and protections of masonry during cold weather (temperature below 40 deg F) or hot weather (temperature above 90 deg F)	P		Art 1.8C, 1.8D
Placement of grout and prestressing grout for bonded tendonds is in compliance	C		Art 3.5, 3.6C
Placement of AAC masonry units and construction of thin-bed mortar joints	C(b) / P(c)		Art 3.3.B.9, 3.3.F.1.b
Observe preparation of grout specimens, mortar specimens, and/or prisms	P		Art 1.4B.2.a.3, 1.4B.2.b.3, 1.4B.2.c.3, 1.4B.3, 1.4B.4

(a) C=Continuous; P=Periodic
(b) Required for the first 5000 square feet of AAC masonry.
(c) Required after the first 5000 square feet of AAC masonry.

20 TESTS AND INSPECTIONS — NOT TO SCALE

1. PROVIDE METAL DECKING OF TYPE AND GAUGE AS SHOWN ON PLANS.
2. METAL FLOOR DECK SHALL BE COMPOSITE TYPE, CONFORMING TO ASTM A653, STRUCTURAL QUALITY, WITH MINIMUM YIELD STRENGTH OF 38 KSI AND SHALL BE ZINC COATED PER ASTM A653, G60 COATING DESIGNATION.
3. METAL ROOF DECK SHALL CONFORM TO ASTM A653 OR ASTM 1063, STRUCTURAL STEEL, WITH MINIMUM YIELD STRENGTH OF 50 ksi AND SHALL BE ZINC COATED PER ASTM A653, G30 COATING DESIGNATION.
4. PRIOR TO FABRICATION, THE CONTRACTOR SHALL SUBMIT SHOP DRAWINGS FOR THE METAL DECKING, SHOWING DECK GAUGE, SIZE AND LAYOUT AS WELL AS CLOSURE CONDITIONS, WELDS TO SUPPORTS AND SIDE LAP DETAILS.
5. CONNECTION AND WELDING OF DECKING TO STRUCTURAL SUPPORTS AND DECK SIDE SEAMS SHALL BE AS SPECIFIED IN THE STRUCTURAL DRAWINGS. ALL ELECTRODES FOR WELDING SHALL COMPLY WITH AWS CODE, E60 SERIES MINIMUM.
6. THE GENERAL CONTRACTOR SHALL COORDINATE THE LOAD REQUIREMENTS FROM ALL SUBCONTRACTORS SO THAT NO COMBINATION OF LOADS EXCEEDS THE LIMITATIONS GIVEN IN DESIGN CRITERIA.
7. ALL REINFORCED OPENINGS IN METAL DECK SHALL BE INSTALLED BY METAL DECK SUBCONTRACTOR.
8. AT METAL DECKS TO RECEIVE CONCRETE, ABSOLUTELY NO CONDUIT OR PIPING OF ANY TYPE IS TO BE PLACED HORIZONTALLY WITHIN THE DEPTH OF THE CONCRETE ABOVE THE METAL DECK.
9. AT METAL DECKS WITHOUT CONCRETE, USING NO MORE THAN 50 LBS. AT 1-1/2" DECK (20 GAUGE MIN.) AND 100 LBS. AT 3" DECK (20 GAUGE MIN.) PER METAL DECK RIB IN ANY SPAN; SPACE HANGERS NO CLOSER THAN 2'-0"CC PERPENDICULAR TO SPAN.
10. WHERE SUSPENSION OR HANGER WIRES ARE REQUIRED BY OTHERS, VERIFY AND COORDINATE LOCATIONS, PATTERNS, SPACINGS, ETC. WITH THE APPROPRIATE TRADE. DRILL OR PUNCH HOLES AT BOTTOM OF DECK FLUTES OF SUFFICIENT SIZE TO PASS SUPPORT WIRES. WIRE SUPPORTS SHALL BE LOOPED AND SECURED WITH A MINIMUM OF THREE (3) TIGHT TURNS AROUND A MINIMUM 1|" x 12" LONG FURRING CHANNEL OR NO. 3 x 12" LONG REINFORCING BAR CENTERED ABOVE THE HOLE AND LAID IN THE DECK FLUTES.

10 METAL DECK NOTES — NOT TO SCALE

1. FABRICATION, ERECTION, AND MATERIALS SHALL CONFORM WITH THE AISC SPECIFICATION FOR THE DESIGN, FABRICATION, AND ERECTION OF STRUCTURAL STEEL FOR BUILDINGS AND THE CBC, LATEST EDITIONS.
2. STRUCTURAL STEEL MATERIALS ARE THUS:
   A. WIDE FLANGE SHAPES: ASTM A992
   B. COLUMN BASE PLATES: ASTM A572
   C. CHANNELS, ANGLES, MISC PLATES: ASTM A36
   D. HSS RECTANGULAR SHAPES: ASTM A500 GRADE B, Fy 46 KSI
   E. HSS ROUND SHAPES: ASTM A500 GRADE B, Fy 42 KSI
   F. CONTINUITY PLATES, DOUBLE PLATES, SHEAR PLATES FOR SPECIAL MOMENT FRAMES: ASTM A992
   G. STEEL PIPE: ASTM A53
   H. BOLTS: ASTM A325N, UNO
   I. ANCHOR RODS: ASTM F1554 GRADE 36
   J. ANCHOR RODS AT SLRS: ASTM F1554 GRADE 55
3. STRUCTURAL STEEL BELOW GRADE SHALL HAVE 3 INCHES MINIMUM OF CONCRETE COVER.
4. "SLIP-CRITICAL" BOLTED CONNECTIONS:
   A. "SLIP-CRITICAL" CONNECTIONS (A325SC DESIGN VALUES WITH SPECIAL INSPECTION) ARE REQUIRED AT ALL GRIDLINE DENOTED SLRS AS NOTED ON PLANS, AND UNO, AT ALL BOLTS IN OVERSIZED OR SLOTTED HOLES.
   B. THE SPECIAL INSPECTOR MUST BE PRESENT DURING INSTALLATION AND TIGHTENING OPERATION OF "SLIP-CRITICAL" CONNECTIONS.
5. PROVIDE 1/2" DIAMETER STITCH BOLTS AND RING FILLS, SPACED AT NOT MORE THAN 2'-0" OC FOR ALL DOUBLE ANGLE MEMBERS.
6. HOLES FOR UNFINISHED BOLTS SHALL BE OF THE SAME NOMINAL DIAMETER OF THE BOLT PLUS 1/16" UNO. USE STANDARD AISC GAGE AND PITCH FOR BOLTS UNO.
7. WELDING SHALL BE DONE BY THE ELECTRIC ARC PROCESS IN ACCORDANCE WITH AMERICAN WELDING SOCIETY STDS, USING ONLY CERTIFIED WELDERS. ALL GROOVE WELDS SHALL HAVE COMPLETE PENETRATION U.N.O. ALL EXPOSED WELDS SHALL BE GROUND SMOOTH. ALL ELECTRODES FOR WELDING SHALL COMPLY w/ AWS CODE AND BE COMPATIBLE w/ BASE METAL. E70 SERIES MIN.
8. WELD LENGTHS CALLED FOR ON PLANS ARE THE NET EFFECTIVE LENGTHS REQUIRED.
9. MINIMUM FILLET WELDS: 3/16" @ t <1/2" , 1/4" @ t< 3/4", & 5/16" @ t > 3/4"WHERE t IS MINIMUM THICKNESS
10. FOR NONDESTRUCTIVE TESTING OF WELDED CONNECTIONS EXCLUDING PRIMARY MEMBERS OF MOMENT RESISTING FRAMES:
    A. WELDED CONNECTIONS SHALL BE TESTED BY NONDESTRUCTIVE METHODS FOR COMPLIANCE WITH AISC J2, AND JOB SPECIFICATIONS. ULTRASONIC TESTING SHALL BE IN ACCORDANCE WITH AWS D1.1 ASTM E164 AND ASME SECTION V. RADIOGRAPHY SHALL BE IN ACCORDANCE WITH AWS D1.1, ASTM E94 AND E99, AND ASME SECTION V. THIS TESTING SHALL BE PART OF THE SPECIAL INSPECTION REQUIREMENTS OF CBC SECTION 1701 PERFORMED BY AN STATE-APPROVED INDEPENDENT TESTING LABORATORY AS FOLLOWS:
       a. BASE METAL THICKER THAN 1 INCH WHEN SUBJECT TO THROUGH THICKNESS WELD SHRINKAGE STRAINS.
       b. ALL COMPLETE PENETRATION GROOVE OR BUTT WELDS.
       c. ALL PARTIAL PENETRATION GROOVE WELDS WHEN USED IN COLUMN SPLICES.
    B. ANY MATERIAL DISCONTINUITIES SHALL BE ACCEPTED OR REJECTED ON THE BASIS OF DEFECT RATING IN ACCORDANCE WITH THE (LARGER REFLECTOR) CRITERIA OF AISC J2.

12 STEEL NOTES — NOT TO SCALE

1. ANCHORS SHALL BE INSTALLED IN ACCORDANCE WITH THE REQUIREMENTS GIVEN IN THE ICC REPORT.
2. SPECIAL INSPECTION IS REQUIRED UNLESS NOTED OTHERWISE. PROVIDE SPECIAL INSPECTION AS INDICATED IN THE ICC REPORT.
3. WHEN INSTALLING DRILLED-IN ANCHORS IN EXISTING CONCRETE OR MASONRY, USE CARE AND CAUTION TO AVOID CUTTING OR DAMAGING EXISTING REINFORCING BARS. DO NOT INSTALL ANCHORS IN PRESTRESSED CONCRETE ELEMENTS.
4. ALL ANCHORS SHALL BE INSTALLED TO THE MAXIMUM DEPTH LISTED IN THE TABLE, UNLESS NOTED OTHERWISE ON THE DETAIL. USE OF OTHER EMBEDMENT DEPTHS MUST BE APPROVED BY THE STRUCTURAL ENGINEER. FOR ANCHORS WITH EMBEDMENTS NOT LISTED, INTERPOLATE BETWEEN THE VALUES GIVEN.
5. THE MINIMUM THICKNESS OF THE CONCRETE SHALL BE 1.5 TIMES THE EMBEDMENT DEPTH UNLESS NOTED OTHERWISE IN THE ICC REPORT.
6. ANCHORS INSTALLED FROM THE BOTTOM INTO METAL DECK WITH CONCRETE SHALL BE INSTALLED IN THE CENTER OF THE LOW FLUTE OF THE DECKING UNLESS NOTED OTHERWISE IN ICC REPORT. THE DECKING SHALL HAVE A MINIMUM THICKNESS OF 20 GAUGE. THE MINIMUM THICKNESS OF THE CONCRETE ABOVE THE HIGH FLUTE OF THE METAL DECK SHALL BE 3.25" OR THE TOTAL THICKNESS OF CONCRETE SHALL BE 1.5 TIMES THE EMBEDMENT DEPTH, WHICHEVER IS GREATER. SEE ICC REPORT FOR ADDITIONAL REQUIREMENTS, INCLUDING MINIMUM DIMENSIONS FOR FLUTE WIDTH AND DEPTH.
7. BASIS OF DESIGN POST-INSTALLED CONCRETE ANCHORS ARE THUS:
   A. EXPANSION ANCHORS:
      a. SIMPSON STRONG BOLT 2 (ICC ESR-3037)
      b. HILTI KB-TZ2 (ICC ESR-4266)
      c. DEWALT POWER-STUD+ SD2 (ICC ESR-2502)
   B. SCREW ANCHORS:
      a. SIMPSON TITEN HD (ICC ESR-2713)
      b. HILTI KWIK HUS-EZ (ICC ESR-3027)
      c. DEWALT SCREW-BOLT+ (ICC ESR-3889)
   C. EPOXY:
      a. SIMPSON SET XP (ICC ESR-1772)
      b. HILTI HIT-RE 100 (ICC ESR-3829)
      c. DEWALT AC200+ (ICC ESR-4027)
8. BASIS OF DESIGN POST-INSTALLED MASONRY ANCHORS ARE THUS:
   A. EXPANSION ANCHORS:
      a. SIMPSON STRONG-BOLT 2 (IAPMO UES ER-240)
      b. HILTI KB-TZ2 (ICC ESR-4561)
      c. DEWALT POWER-STUD+ SD1 (ICC ESR-2966)
   B. SCREW ANCHORS:
      a. SIMPSON TITEN HD (ICC ESR-1056)
      b. HILTI KWIK HUS-EZ (ICC ESR-3056)
      c. DEWALT SCREW-BOLT+ (ICC ESR-4042)
   C. EPOXY:
      a. SIMPSON SET XP (UES 265)
      b. HILTI HIT-HY 200-R (ICC ESR-3963)
9. THE TESTING OF THE ANCHORS SHALL BE DONE BY A QUALIFIED TESTING AGENCY AND A REPORT OF THE TEST RESULTS SHALL BE SUBMITTED TO THE STATE. SEE NOTES ON THIS SHEET FOR TESTING CRITERIA.

EXPANSION ANCHOR TORQUE TEST VALUES (FT-LB)

	CONCRETE					MASONRY				
DIAMETER	1/4"	3/8"	1/2"	5/8"	3/4"	1/4"	3/8"	1/2"	5/8"	3/4"
SIMPSON	4	30	65	80	150	4	20	35	55	100
HILTI	4	30	50	40	110	6	15	25	35	50
DEWALT	-	20	40	60	110	-	20	40	50	-

6 ANCHOR NOTES — NOT TO SCALE

1. VERTICAL CELLS SHALL HAVE VERTICAL ALIGNMENT SUFFICIENT TO MAINTAIN A CLEAR UNOBSTRUCTED CONTINUOUS VERTICAL CELL.
2. CLEAN OUT OPENINGS SHALL BE PROVIDED AT THE BOTTOMS OF ALL CELLS TO BE FILLED AT EACH LIFT OR POUR OF GROUT WHERE SUCH LIFT OR POUR OF GROUT IS IN EXCESS OF 2'-0" IN HEIGHT. ANY OVERHANGING MORTAR OR OTHER OBSTRUCTION OR DEBRIS SHALL BE REMOVED FROM INSIDE OF ALL CELLS. THE CLEAN OUTS SHALL BE SEALED AFTER INSPECTION AND BEFORE GROUTING. MECHANICALLY VIBRATE ALL GROUT POURS.
3. VERTICAL REINFORCING SHALL BE HELD IN POSITION AT TOP AND BOTTOM AND AT INTERVALS NOT TO EXCEED 192 BAR DIAMETERS.
4. THOROUGHLY CLEAN ALL CELLS AND BOND BEAMS OF MORTAR BEFORE GROUTING.
5. ALL CELLS SHALL BE FILLED SOLIDLY WITH GROUT. ALL GROUTING SHALL BE DONE UNDER THE OBSERVATION OF A QUALIFIED INSPECTOR.
6. WHEN GROUTING IS STOPPED FOR ONE HOUR OR LONGER, HORIZONTAL CONSTRUCTION JOINTS SHALL BE FORMED BY STOPPING THE POUR OF GROUT 1 1/2" BELOW THE TOP OF THE UPPERMOST UNIT.
7. EACH VERTICAL BAR IN WALLS SHALL BE LAPPED PER BELOW WITH A DOWEL OF THE SAME SIZE EXTENDING FROM THE FOUNDATION. LOCATE VERTICAL REINFORCING AT CENTERLINE OF WALL UNLESS SHOWN OR NOTED OTHERWISE. CARRY EACH DOWEL TO WITHIN 3" OF THE BOTTOM OF THE FOUNDATION AND TERMINATE WITH 90 DEGREE HOOK. DOWELS SHALL BE STRAIGHT AND PLUMB.
8. PLACE ALL HORIZONTAL BARS IN BOND BEAM UNITS.
9. ALL EMBEDDED ITEMS (BOLTS, STRAPS, ETC.) SHALL BE SECURED IN PLACE PRIOR TO GROUTING. CUT A HOLE IN THE FACE SHELL TO ATTAIN A MINIMUM OF 1" GROUT ALL AROUND EMBEDDED ITEMS.
10. ALL BOLTS IN MASONRY SHALL BE HEX-HEADED BOLTS CONFORMING TO ASTM F1554, ASTM A307, OR THREADED ROD w/ DBL NUTS AT ANCHORED ENDS CONFORMING TO ASTM A36.
11. ALL REBAR SHALL BE LAP SPLICED AS FOLLOWS (UNO):

CMU REINFORCEMENT LAP SPLICE SCHEDULE, INCHES

F'c = 2,000 PSI							
#3	#4	#5	#6	#7	#8	#9	
12	24	36	66	84	130	160	

8 CMU NOTES — NOT TO SCALE

1. FORCES SHOWN ARE GIVEN AS UNFACTORED FORCES (1.0D, 1.0RLL, 1.0E, ETC.) SEISMIC AXIAL FORCES SHOWN ON JOIST TAGS ARE GIVEN IN KIPS. FOR EXAMPLE, P12 REFERS TO A SEISMIC AXIAL FORCE OF 12,000 LBS.
2. STEEL JOIST DESIGN, CALCULATIONS, AND SHOP DRAWINGS SHALL BE SUBMITTED TO THE STATE FOR REVIEW AND APPROVAL PRIOR TO FABRICATION. CALCULATIONS SHALL BE STAMPED AND SIGNED BY A PROFESSIONAL CIVIL AND STRUCTURAL ENGINEER IN THE STATE OF CALIFORNIA.
3. DESIGN SHALL BE PERFORMED BASED ON THE PLANS, SPECIFICATIONS, AND LOADING CRITERIA PROVIDED HEREIN.

1 STEEL JOIST NOTES — NOT TO SCALE

1. CONCRETE MIX DESIGNS (INCLUDING TEST RECORD METHOD) SHALL BE PREPARED BY A CIVIL ENGINEER LICENSED IN THE STATE OF CALIFORNIA, REVIEWED BY THE STATE'S TESTING LABORATORY AND SUBMITTED TO THE STATE FOR REVIEW

CONCRETE MIXES

USE	f'c (psi)	WEIGHT (pcf)
FOOTINGS	3,000	145
SLAB ON GRADE	4,000	145
WALLS	4,000	145
HOUSEKEEPING PADS	3,000	145

2. DIMENSIONS SHOWN FOR LOCATION OF REINFORCING ARE TO THE FACE OF MAIN BARS AND DENOTE CLEAR COVERAGE. CONCRETE COVERAGE SHALL BE AS FOLLOWS. CONCRETE:
   A. DEPOSITED DIRECTLY AGAINST GROUND (EXCEPT SLABS).... 3"
   B. EXPOSED TO GROUND BUT PLACED IN FORMS.... 2"
   C. EXPOSED TO GROUND (TOP BARS).... 2" CLR FROM TOP UNO
   D. TIED COLUMNS (MAIN BARS).... 2"
   E. BEAMS (TOP BARS).... 1-1/2"
   F. BEAMS (ALL OTHER MAIN REINFORCING).... 2"
   G. WALLS (EXTERIOR FACE #5 & SMALLER).... 1-1/2"
   H. WALLS (EXTERIOR FACE #6 & LARGER).... 2"
   I. WALLS (INTERIOR FACE).... 3/4"
   J. SLABS (ON FORMS).... 3/4"
   K. SLABS (ON GROUND).... 2" CLR FROM TOP UNO
3. SPLICES IN CONTINUOUS REINFORCEMENT SHALL BE LAPPED UNO. SEE LAP SPLICE SCHEDULE. SPLICES IN ADJACENT BARS SHALL BE NOT LESS THAN 5'-0" APART. SPLICE CONTINUOUS BARS IN SOIL-BEARING GRADE BEAMS AS FOLLOWS: TOP BARS AT CENTERLINE OF SUPPORT, BOTTOM BARS AT MID-SPAN, BOTTOM BARS AT CENTERLINE OF SUPPORT. ALL BARS SIZE #14 AND LARGER SHALL BE CONTINUOUS FOR THE FULL LENGTH SHOWN. SPLICES IN WWF SHALL BE 1-1/2 MESHES WIDE.
4. PROVIDE HOOKS AT ENDS OF ALL REINFORCING AT ENDS, CORNERS AND INTERSECTIONS U.N.O. ALL HOOKS SHALL BE STANDARD HOOKS UNLESS OTHERWISE SHOWN OR NOTED.
5. NO WOOD SPREADERS ALLOWED. NO WOOD STAKES ALLOWED IN AREAS TO BE CONCRETED.
6. ADDITIONAL REINFORCING IN PRECAST OR TILT-UP PANELS REQUIRED FOR LIFTING STRESSES SHALL BE DESIGNED BY AND SUPPLIED BY CONTRACTOR AND SUBMITTED TO THE STATE FOR REVIEW.
7. PROVIDE 2 - #5 X 4'-0" DIAG. REINFORCING AT MID-DEPTH OF SLAB AT ALL RE-ENTRANT CORNERS, TYP.
8. ALL SAW CUTTING SHALL BE DONE AFTER INITIAL SET HAS OCCURRED TO AVOID TEARING OR DAMAGE BY THE SAW BLADE, BUT BEFORE INITIAL SHRINKAGE HAS OCCURRED.

REINFORCEMENT LAP SPLICE SCHEDULE, INCHES

F'c = 3,000 PSI										
SPLICE CLASS	REINF LOCATION	#3	#4	#5	#6	#7	#8	#9	#10	#11
A	TOP	22	29	36	43	63	72	81	91	101
	OTHER	17	22	28	33	48	55	62	70	78
B	TOP	28	37	47	56	81	93	105	118	131
	OTHER	22	29	36	43	63	72	81	91	101
F'c = 4,000 PSI										
A	TOP	19	25	31	37	54	62	70	79	87
	OTHER	15	19	24	29	42	48	54	61	67
B	TOP	24	32	40	48	70	80	91	102	113
	TOHER	19	25	31	37	54	62	70	79	87

RIENFORCEMENT LAP SPLICE SCHEDULE NOTES:
A. SCHEDULE APPLIES TO UNCOATED, GRADE 60 REINFORCING STEEL AND NORMAL-WT CONCRETE.
B. ALL LAP SPLICES SHALL BE CLASS B, UNO.
C. TOP REINFORCEMENT IS HORIZONTAL REINFORCEMENT LOCATED SUCH THAT MORE THAN 12 INCHES OF FRESH CONCRETE IS CAST IN THE MEMBER BELOW THE SPLICE.
D. WHEN LIGHTWEIGHT CONCRETE IS USED, MULTIPLY LAP LENGTHS BY 1.30.
E. WHERE CLEAR SPACING OF BARS BEING SPLICED IS LESS THAN 2 BAR DIA. OR WHERE CLEAR COVER OF BARS BEING SPLICED IS LESS THAN 1 BAR DIA.,MULTIPLY LAP LENGTHS BY 1.50, UNO.
F. WHERE NOTES #4 AND #5 OCCUR, MULTIPLY LAP LENGTHS BY 2.00, UNO.
G. WITH ALL REQUIRED INCREASES, LAP SPLICE LENGTH SHALL NOT BE LESS THAN 53 BAR DIA.

4 CONCRETE NOTES — NOT TO SCALE

IDENTIFICATION STAMP
DIV. OF THE STATE ARCHITECT
APP: 03-121324 INC:
REVIEWED FOR
SS ☐ FLS ☐ ACS ☑
DATE: 09/14/2022

OFFICE OF THE STATE FIRE MARSHAL
APPROVED FIRE AND PANIC ONLY
09/07/22
21-0233
Approval of this plan does not authorize or approve any omission or deviation from applicable regulations. Final approval is subject to field inspection. One set of approved plans shall be available on the project site at all times.

DGS GENERAL SERVICES
Department of General Services
Architecture & Engineering Sections
State of California
Real Estate Services Division
Project Management & Development Branch
707 Third Street, Suite 4-105
West Sacramento, California 95605

REGISTERED PROFESSIONAL ENGINEER
MARSHALL ROBERTS
No. S-G173
STRUCTURAL
STATE OF CALIFORNIA
1/21/22

DMV
State of California
Department of Motor Vehicles

Issue

No.	Date	Description
1	9/2/22	

Project
SANTA MARIA FIELD OFFICE REPLACEMENT
2770 SANTA MARIA WAY
SANTA MARIA, CA 93455
SANTA BARBARA COUNTY
MOTOR VEHICLES

Supervisor	Designed	Drawn
J.DIGIORGIO	M.ROBERTS	M.ROBERTS

DSA App No. | SFM Permit No.

Sheet Title
STRUCTURAL MATERIALS NOTES & SPECIAL INSPECT

Project Number
DGS000000140725

Sheet Scale
Sheet Number
S002

Copyright © 2020, California Department of General Services: Real Estate Services Division

C:\Projects\DGS000000140725_STR_Marshall.Roberts.rvt
1/21/2022 2:26:42 PM

RELATIVE BORDER SCALE IN INCHES 0 1 2

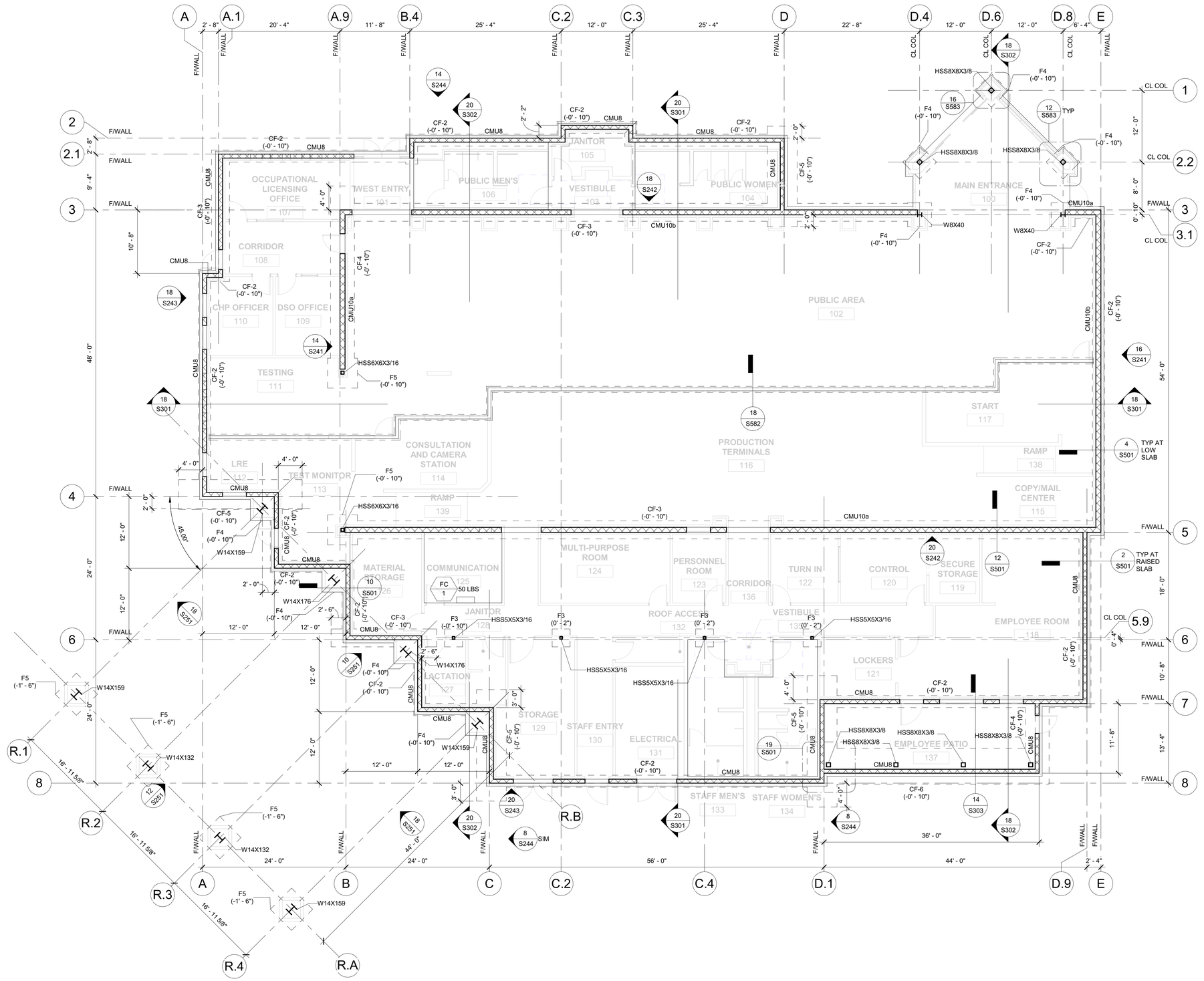

NOTES:

1. ALL ELEVATIONS ARE IN REALATION TO THE (0' - 0") DATUM (+255.50').
2. SEE GENERAL NOTES (S0) SERIES AND TYPICAL DETAILS (S5) SERIES DRAWINGS. GENERAL NOTES AND TYPICAL DETAILS ARE USED WHETHER REFERENCED OR NOT.
3. GRAPHICAL LEGEND AND ABBREVIATION DEFINITIONS ARE ON S001.
4. PREPARE BUILDING PAD IN ACCORDANCE WITH EARTH WORK SPECIFICATIONS SECTION 31 20 00 - EARTHMOVING AND 6 / C514. SEE INFORMATION REGARDING STRUCTURAL FILL REQUIREMENTS, SEE CIVIL DRAWINGS AND GENERAL NOTES.
5. GRIDLINES ARE LOCATED AT FACE OF CMU WALL OR CENTERLINE OF STEEL COLUMN.
6. ALL DIMENSIONS SHOWN ARE TO FACE OF WALL OR CENTERLINE OF COLUMN/BEAM UNO.
7. PROVIDE SLAB CONTROL JOINTS PER TYPICAL DETAILS.
8. VERIFY ALL BUILDING DIMENSIONS WITH ARCHICTECTURAL DRAWINGS. NOTIFY THE STATE IF DISCREPANCIES OCCUR.
9. SEE COLUMN SCHEDULE 18 / S551

20 FOUNDATION PLAN — 1/8" = 1'-0"

IDENTIFICATION STAMP
DIV. OF THE STATE ARCHITECT
APP: 03-121324 INC: A
REVIEWED FOR
SS ☐ FLS ☐ ACS ☑
DATE: 09/14/2022

OFFICE OF THE STATE FIRE MARSHAL
APPROVED FIRE AND PANIC ONLY
09/07/22
21-0233
Approval of this plan does not authorize or approve any omission or deviation from applicable regulations. Final approval is subject to field inspection. One set of approved plans shall be available on the project site at all times.

DGS GENERAL SERVICES
Department of General Services
Architecture & Engineering Sections
State of California
Real Estate Services Division
Project Management & Development Branch
707 Third Street, Suite 4-105
West Sacramento, California 95605

REGISTERED PROFESSIONAL ENGINEER
MARSHALL ROBERTS
No. S-6173
STRUCTURAL
STATE OF CALIFORNIA
1/21/22

DMV
State of California
Department of Motor Vehicles

Issue

No.	Date	Description
1	9/2/22	

Project
SANTA MARIA FIELD OFFICE REPLACEMENT
2770 SANTA MARIA WAY
SANTA MARIA, CA 93455
SANTA BARBARA COUNTY

MOTOR VEHICLES

Supervisor	Designed	Drawn
J.DIGIORGIO	M.ROBERTS	M.ROBERTS

DSA App No. | SFM Permit No.

Sheet Title
FOUNDATION PLAN

Project Number
DGS000000140725

Sheet Scale
Sheet Number
S111

Copyright © 2020, California Department of General Services - Real Estate Services Division

C:\Projects\DGS000000140725_STR_Marshall.Roberts.rvt
1/21/2022 2:26:46 PM

RELATIVE BORDER SCALE IN INCHES

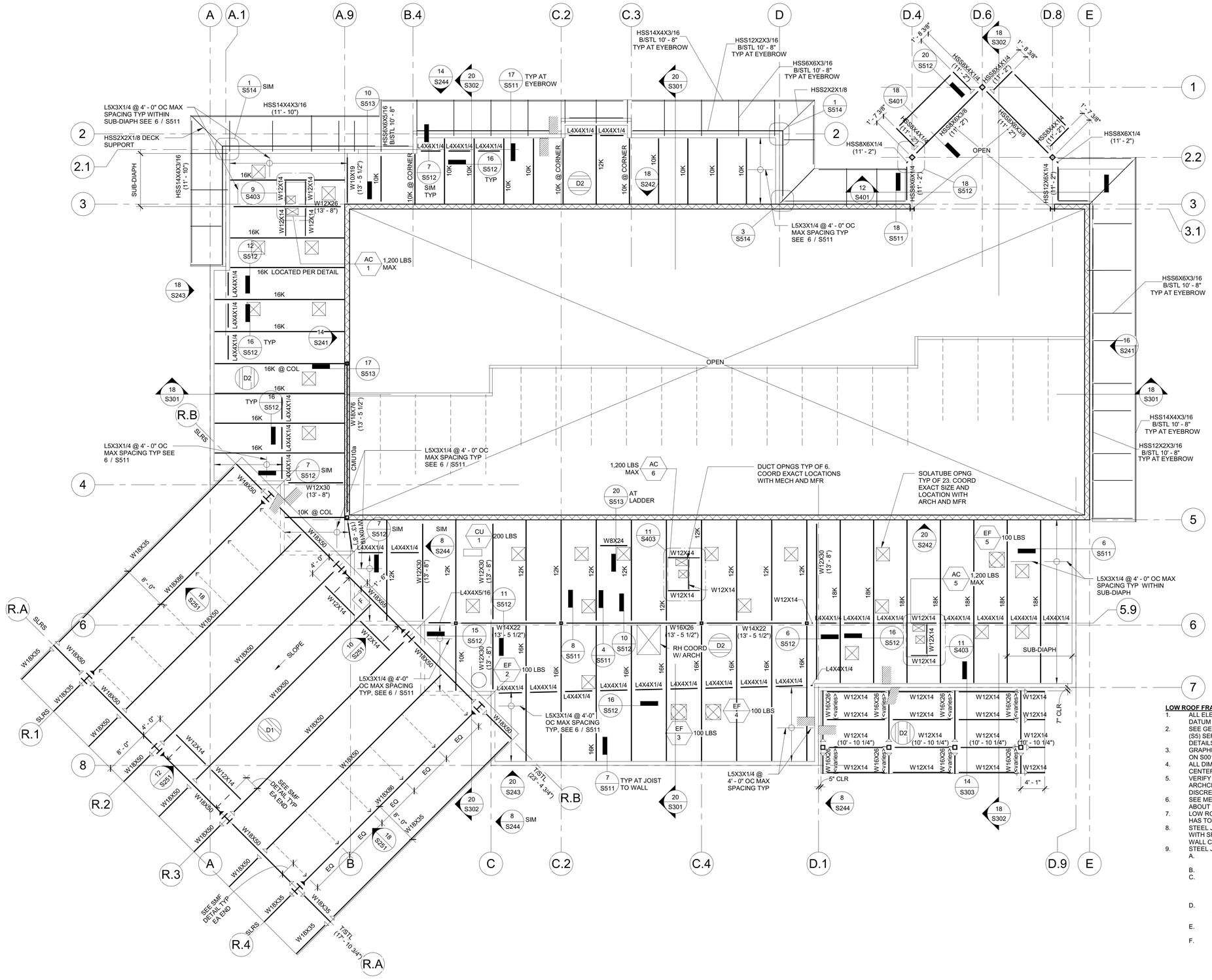

LOW ROOF FRAMING NOTES:

1. ALL ELEVATIONS ARE REFERENCED TO THE (0' - 0") DATUM - (255.50') OR PER CIVIL.
2. SEE GENERAL NOTES (S0) SERIES AND TYPICAL DETAILS (S5) SERIES DRAWINGS. GENERAL NOTES AND TYPICAL DETAILS ARE USED WHETHER REFERENCED OR NOT.
3. GRAPHICAL LEGEND AND ABBREVIATION DEFINITIONS ARE ON S001.
4. ALL DIMENSIONS SHOWN ARE TO FACE OF WALL OR CENTERLINE OF COLUMN/BEAM UNO.
5. VERIFY ALL BUILDING DIMENSIONS WITH ARCHCITECTURAL DRAWINGS. NOTIFY THE STATE IF DISCREPANCIES OCCUR.
6. SEE MECHANICAL SHEETS FOR MORE INFORMATION ABOUT EQUIPMENT.
7. LOW ROOF STEEL JOISTS BEAR ON STEEL LEDGER WHICH HAS TOP OF STEEL (+13' - 5 1/2") UNO.
8. STEEL JOIST SPACING IS UNIFORM BT JOISTS OR BEAMS WITH SPECIFIC LOCATIONS CALLED OUT I.E. @ COL OR @ WALL CORNER. MAX CLEAR DECK SPAN BT JOISTS IS 6' - 0"
9. STEEL JOIST LOADING IS THUS:
   - A. DEAD LOAD: 19 PSF (NOT INDLUDING SELF WEIGHT OF JOISTS.
   - B. ROOF LIVE LOAD: 20 PSF REDUCIBLE.
   - C. MINIMUM SEISMIC AXIAL FORCE IS 8.0 KIPS FOR ALL JOISTS ON THE LOW ROOF PLAN. LARGER AXIAL FORCES OCCUR AS SHOWN ON PLAN (Pxx). AXIAL FORCES ARE NOT FACTORED (1.0E).
   - D. MECHANICAL EQUIPMENT AS SHOWN. APPROXIMATE LOCATIONS ARE GIVEN. COORDINATE EXACT LOCATIONS IN FIELD.
   - E. JOIST DESIGNATION IS PROVIDED FOR JOISTS WITH UNIFORM LOADING.
   - F. DEPTH AND TYPE OF JOIST IS SHOWN ON PLAN FOR JOISTS WITH NON-UNIFORM LOADING.

20 LOW ROOF FRAMING PLAN — 1/8" = 1'-0"

RELATIVE BORDER SCALE IN INCHES 0 1 2 3

1/21/2022 2:26:50 PM C:\Projects\DGS000000140725_STR_Marshall Roberts.rvt

IDENTIFICATION STAMP
DIV. OF THE STATE ARCHITECT
APP: 03-121324 INC:
REVIEWED FOR
SS ☐ FLS ☐ ACS ☑
DATE: 09/14/2022

OFFICE OF THE STATE FIRE MARSHAL
APPROVED FIRE AND PANIC ONLY
09/07/22
21-0233
Approval of this plan does not authorize or approve any omission or deviation from applicable regulations. Final approval is subject to field inspection. One set of approved plans shall be available on the project site at all times.

DGS GENERAL SERVICES
Department of General Services
Architecture & Engineering Sections
State of California
Real Estate Services Division
Project Management & Development Branch
707 Third Street, Suite 4-105
West Sacramento, California 95605

REGISTERED PROFESSIONAL ENGINEER MARSHALL ROBERTS No. S-G173 STRUCTURAL STATE OF CALIFORNIA
1/21/22

DMV
State of California
Department of Motor Vehicles

Issue

No.	Date	Description
1	9/2/22	

Project
SANTA MARIA FIELD OFFICE REPLACEMENT
2770 SANTA MARIA WAY
SANTA MARIA, CA 93455
SANTA BARBARA COUNTY
MOTOR VEHICLES

Supervisor	Designed	Drawn
J.DIGIORGIO	M.ROBERTS	M.ROBERTS

DSA App No. | SFM Permit No.

Sheet Title
LOW ROOF FRAMING PLAN

Project Number
DGS000000140725

Sheet Scale
Sheet Number
S112

Copyright © 2020, California Department of General Services - Real Estate Services Division

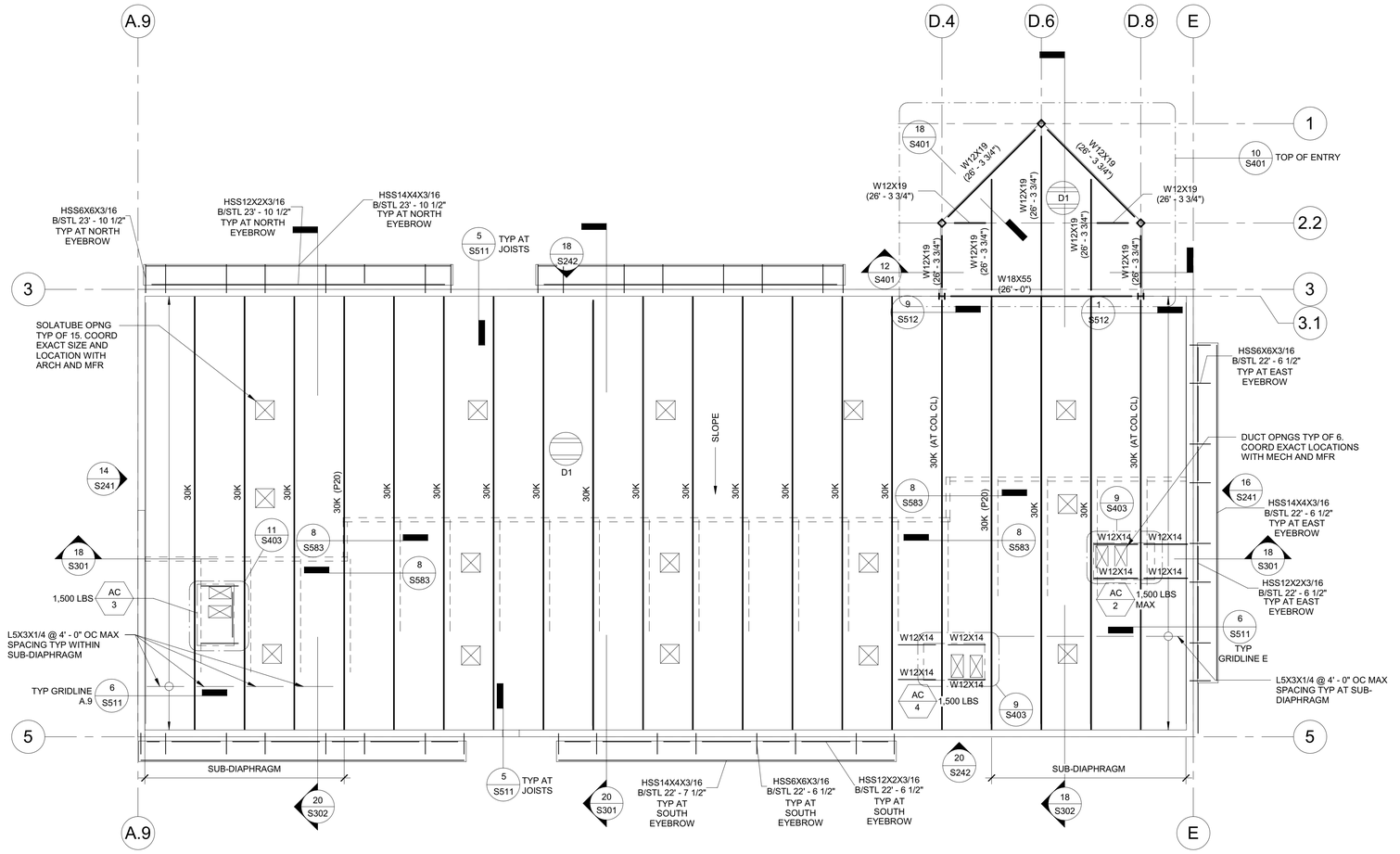

NOTES:

1. ALL ELEVATIONS ARE REFERENCED TO THE (0' - 0") DATUM - (255.50') OR PER CIVIL.
2. SEE GENERAL NOTES (S0) SERIES AND TYPICAL DETAILS. GENERAL NOTES AND TYPICAL DETAILS ARE USED WHETHER REFERENCED OR NOT.
3. GRAPHICAL LEGEND AND ABBREVIATION DEFINITIONS ARE ON S001.
4. ALL DIMENSIONS SHOWN ARE TO FACE OF WALL OR CENTERLINE OF COLUMN/BEAM UNO.
5. VERIFY ALL BUILDING DIMENSIONS WITH ARCHCITECTURAL DRAWINGS. NOTIFY THE STATE IF DISCREPANCIES OCCUR.
6. SEE MECHANICAL SHEETS FOR MORE INFORMATION ABOUT EQUIPMENT.
7. STEEL JOISTS BEAR ON STEEL LEDGER WITH T/STL OF (+24' - 1 1/2") AT GRIDLINE 5 AND (+26' - 1 1/2") AT GRIDLINE 3.
8. STEEL JOIST SPACING IS UNIFORM BT JOISTS OR BEAMS WITH SPECIFIC LOCATIONS CALLED OUT I.E. @ COL OR @ WALL CORNER. MAX CLEAR DECK SPAN BT JOISTS IS 6' - 0"
9. STEEL JOIST LOADING IS THUS:
   - A. DEAD LOAD: 19 PSF (NOT INDLUDING SELF WEIGHT OF JOISTS.
   - B. ROOF LIVE LOAD: 20 PSF REDUCIBLE.
   - C. MINIMUM SEISMIC AXIAL FORCE IS 12.0 KIPS FOR ALL JOISTS ON THE HIGH ROOF PLAN. LARGER AXIAL FORCES OCCUR AS SHOWN ON PLAN (Pxx). AXIAL FORCES ARE NOT FACTORED (1.0E).
   - D. MECHANICAL EQUIPMENT AS SHOWN. APPROXIMATE LOCATIONS ARE GIVEN. COORDINATE EXACT LOCATIONS IN FIELD.
   - E. DEAD AND SEISMIC FORCES FROM HANGING WALL ARE SHOWN IN STRUCTURAL BUILDING SECTIONS.
   - F. DEPTH AND TYPE OF JOIST IS SHOWN ON PLAN.
10. 30K IS A STEEL JOIST DESIGNATION.

20 HIGH ROOF FRAMING PLAN — 1/8" = 1'-0"

IDENTIFICATION STAMP
DIV. OF THE STATE ARCHITECT
APP: 03-121324 INC:
REVIEWED FOR
SS ☐ FLS ☐ ACS ☑
DATE: 09/14/2022

OFFICE OF THE STATE FIRE MARSHAL
APPROVED FIRE AND PANIC ONLY
09/07/22
21-0233
Approval of this plan does not authorize or approve any omission or deviation from applicable regulations. Final approval is subject to field inspection. One set of approved plans shall be available on the project site at all times.

GENERAL SERVICES

Department of General Services
Architecture & Engineering Sections
State of California
Real Estate Services Division
Project Management & Development Branch

707 Third Street, Suite 4-105
West Sacramento, California 95605

REGISTERED PROFESSIONAL ENGINEER
MARSHALL ROBERTS
No. S-G173
STRUCTURAL
STATE OF CALIFORNIA
1/21/22

DMV
State of California
Department of Motor Vehicles

Issue

No.	Date	Description
1	9/2/22	

Project
SANTA MARIA FIELD OFFICE REPLACEMENT

2770 SANTA MARIA WAY
SANTA MARIA, CA 93455
SANTA BARBARA COUNTY

MOTOR VEHICLES

Supervisor	Designed	Drawn
J.DIGIORGIO	M.ROBERTS	M.ROBERTS

DSA App No. | SFM Permit No.

Sheet Title
HIGH ROOF FRAMING PLAN

Project Number
DGS000000140725

Sheet Scale
Sheet Number
S113

Copyright © 2020, California Department of General Services, Real Estate Services Division

C:\Projects\DGS000000140725_STR_Marshall Roberts.rvt
1/21/2022 2:26:52 PM

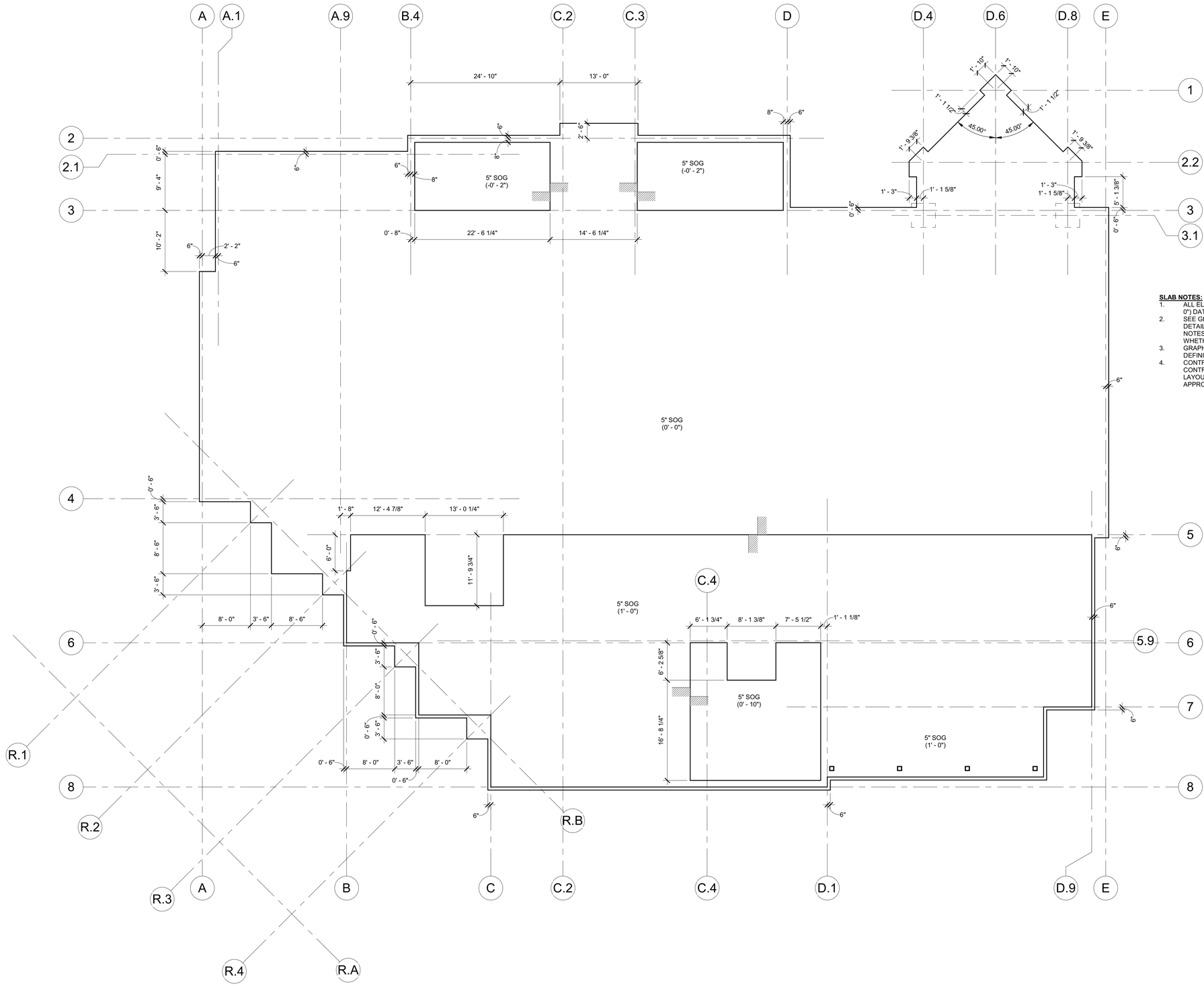

SLAB NOTES:

1. ALL ELEVATIONS ARE IN REALATION TO THE (0' - 0") DATUM (+255.50').
2. SEE GENERAL NOTES (S0) SERIES AND TYPICAL DETAILS (S5) SERIES DRAWINGS. GENERAL NOTES AND TYPICAL DETAILS ARE USED WHETHER REFERENCED OR NOT.
3. GRAPHICAL LEGEND AND ABBREVIATION DEFINITIONS ARE ON S001.
4. CONTROL JOINTS ARE PER 15 / S531. CONTRACTOR TO SUBMIT CONTROL JOINT LAYOUT TO THE STATE FOR REVIEW AND APPROVAL.

20 SLAB ON GRADE

1/8" = 1'-0"

RELATIVE BORDER SCALE IN INCHES

C:\Projects\DGS000000140725_STR_Marshall Roberts.rvt

1/21/2022 2:26:52 PM

IDENTIFICATION STAMP
DIV. OF THE STATE ARCHITECT
APP: 03-121324 INC:
REVIEWED FOR
SS ☐ FLS ☐ ACS ☑
DATE: 09/14/2022

OFFICE OF THE STATE FIRE MARSHAL
APPROVED FIRE AND PANIC ONLY
09/07/22
21-0233
Approval of this plan does not authorize or approve any omission or deviation from applicable regulations. Final approval is subject to field inspection. One set of approved plans shall be available on the project site at all times.

DGS GENERAL SERVICES

Department of General Services
Architecture & Engineering Sections
State of California
Real Estate Services Division
Project Management & Development Branch
707 Third Street, Suite 4-105
West Sacramento, California 95605

REGISTERED PROFESSIONAL ENGINEER
MARSHALL ROBERTS
No. S-6173
STRUCTURAL
STATE OF CALIFORNIA
1/21/22

DMV
State of California
Department of Motor Vehicles

Issue

No.	Date	Description
1	9/2/22	

Project
SANTA MARIA FIELD OFFICE REPLACEMENT

2770 SANTA MARIA WAY
SANTA MARIA, CA 93455
SANTA BARBARA COUNTY

MOTOR VEHICLES

Supervisor	Designed	Drawn
J.DIGIORGIO	M.ROBERTS	M.ROBERTS

DSA App No.	SFM Permit No.

Sheet Title
SLAB ON GRADE PLAN

Project Number
DGS000000140725

Sheet Scale

Sheet Number
S121

Copyright © 2020, California Department of General Services - Real Estate Services Division

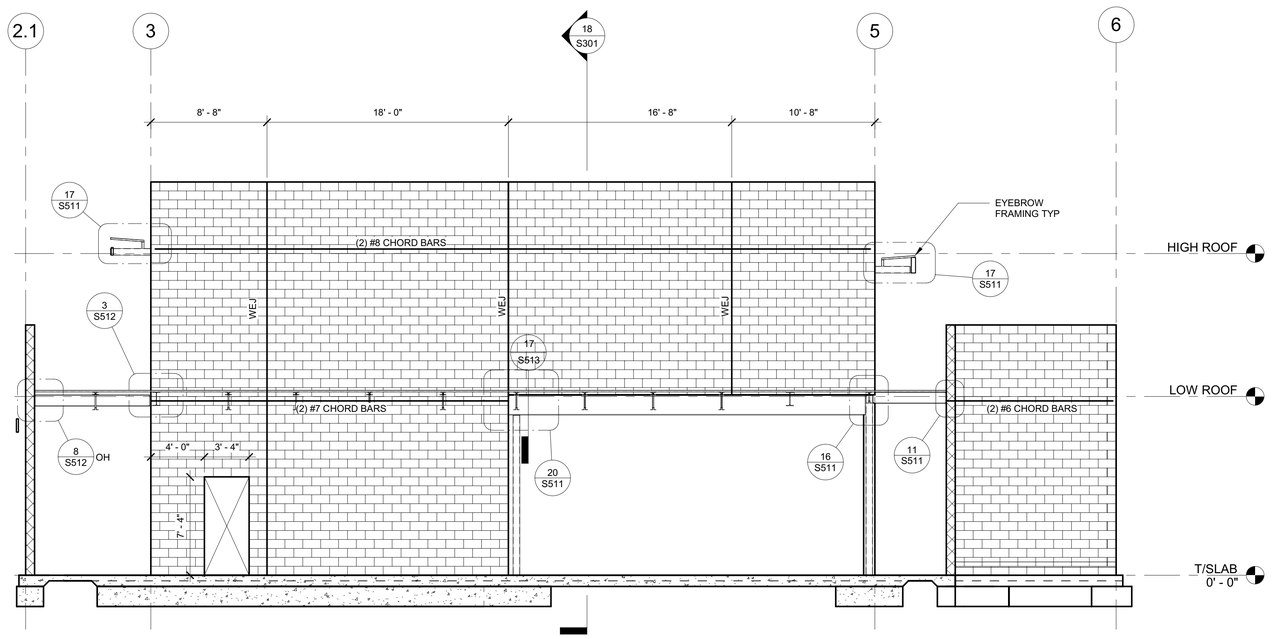

14 SHEARWALL ELEVATION A.9 LINE — 3/16" = 1'-0"

FRAMING ELEVATION NOTES:

1. ALL WALL OPENINGS ARE SHOWN ON CMU FRAMING ELEVATIONS.
2. EYEBROW FRAMING IS SHOWN SCHEMATICALLY ON FRAMING ELEVATIONS. SEE DETAILS.
3. ROOF FRAMING ELEVATIONS ARE SHOWN ON PLAN.
4. TEST DRIVE CANOPY NOT SHOWN FOR CLARITY.
5. WEJ PER 3 / S542

2 ELEVATION NOTES — NOT TO SCALE

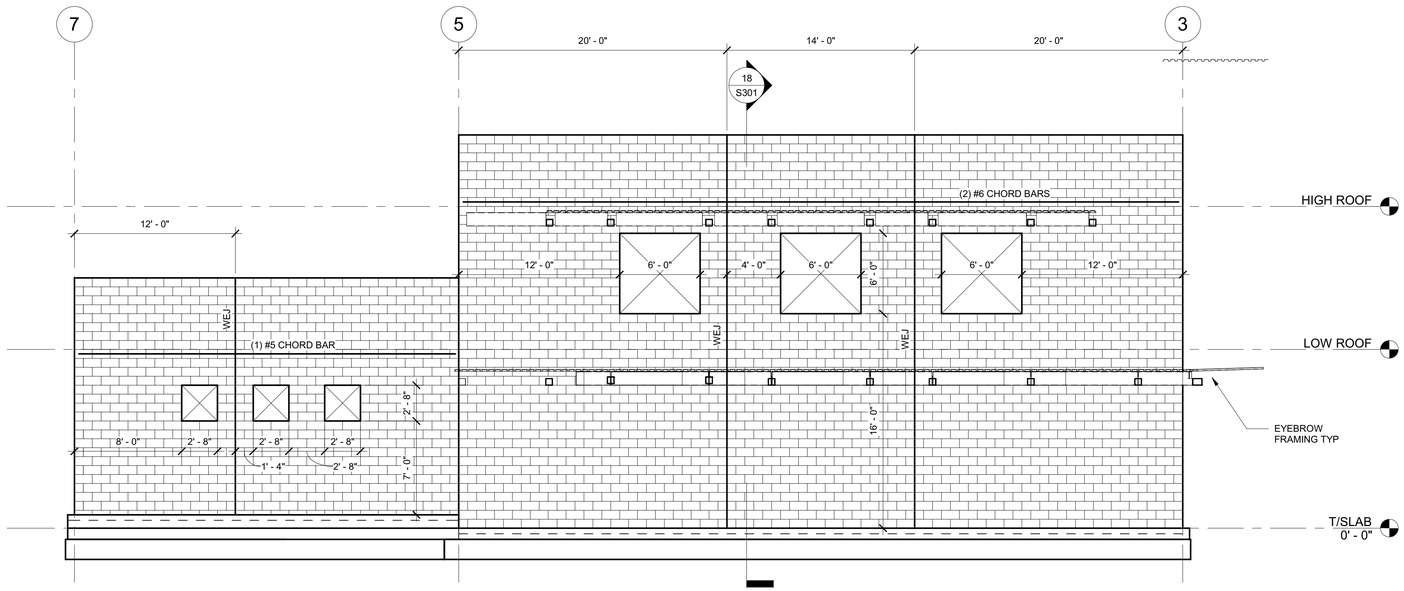

NOTE: PATIO FRAMING NOT SHOWN

16 SHEARWALL ELEVATION E LINE — 3/16" = 1'-0"

IDENTIFICATION STAMP
DIV. OF THE STATE ARCHITECT
APP: 03-121324 INC:
REVIEWED FOR
SS ☐ FLS ☐ ACS ☑
DATE: 09/14/2022

OFFICE OF THE STATE FIRE MARSHAL
APPROVED FIRE AND PANIC ONLY
09/07/22
21-0233
Approval of this plan does not authorize or approve any omission or deviation from applicable regulations. Final approval is subject to field inspection. One set of approved plans shall be available on the project site at all times.

GENERAL SERVICES
Department of General Services
Architecture & Engineering Sections
State of California
Real Estate Services Division
Project Management & Development Branch
707 Third Street, Suite 4-105
West Sacramento, California 95605

REGISTERED PROFESSIONAL ENGINEER
MARSHALL ROBERTS
No. S-6173
STRUCTURAL
STATE OF CALIFORNIA
1/21/22

DMV
State of California
Department of Motor Vehicles

Issue

No.	Date	Description
1	9/2/22	

Project
SANTA MARIA FIELD OFFICE REPLACEMENT
2770 SANTA MARIA WAY
SANTA MARIA, CA 93455
SANTA BARBARA COUNTY
MOTOR VEHICLES

Supervisor	Designed	Drawn
J.DIGIORGIO	M.ROBERTS	M.ROBERTS

DSA App No. | SFM Permit No.

Sheet Title
SHEARWALL FRAMING ELEVATIONS

Project Number
DGS000000140725

Sheet Scale
Sheet Number
S241

Copyright © 2020, California Department of General Services - Real Estate Services Division

C:\Projects\DGS000000140725_STR_Marshall.Roberts.rvt
1/21/2022 2:26:54 PM
RELATIVE BORDER SCALE IN INCHES

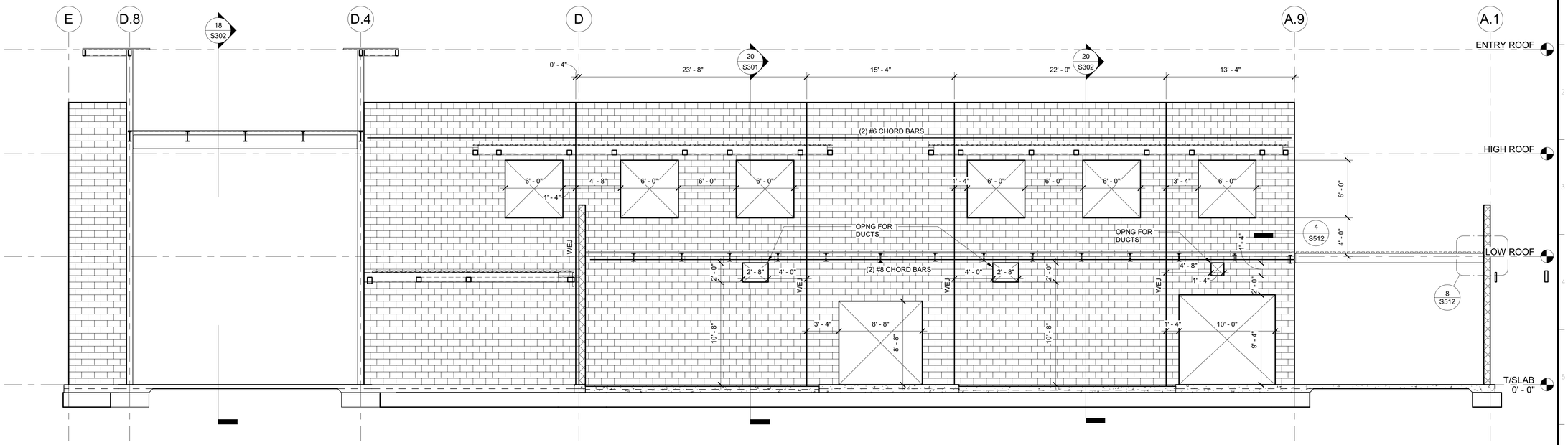

18 SHEARWALL ELEVATION 3 LINE — 3/16" = 1'-0"

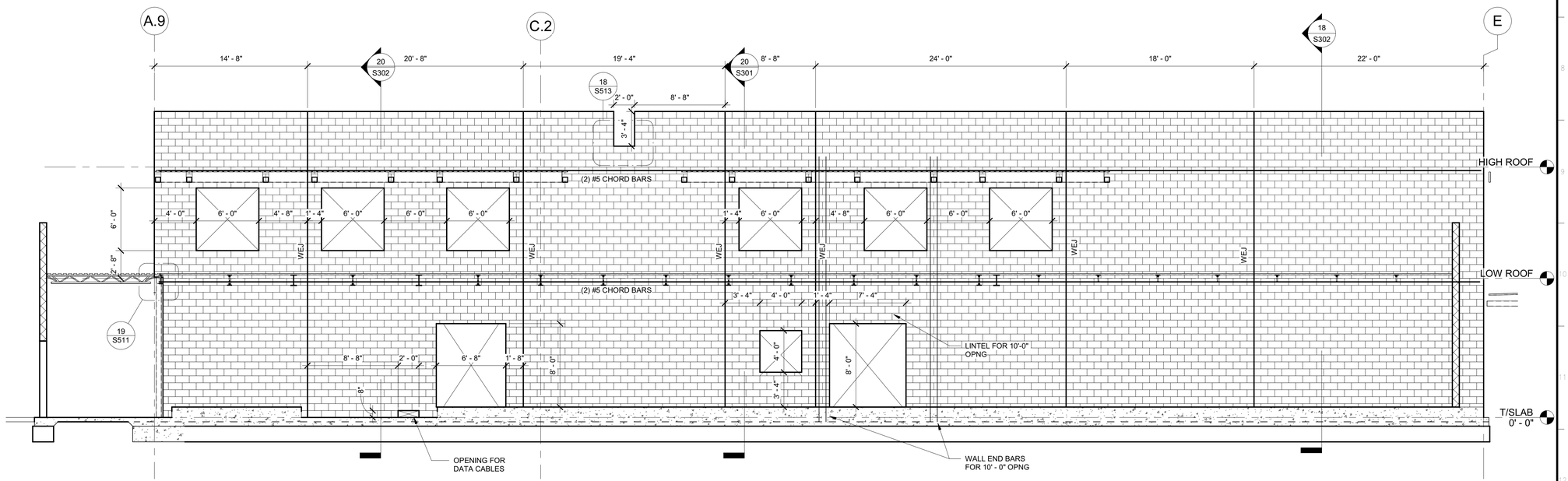

20 SHEARWALL ELEVATION 5 LINE — 3/16" = 1'-0"

IDENTIFICATION STAMP
DIV. OF THE STATE ARCHITECT
APP: 03-121324 INC:
REVIEWED FOR
SS ☐ FLS ☐ ACS ☑
DATE: 09/14/2022

OFFICE OF THE STATE FIRE MARSHAL
APPROVED FIRE AND PANIC ONLY
09/07/22
21-0233
Approval of this plan does not authorize or approve any omission or deviation from applicable regulations. Final approval is subject to field inspection. One set of approved plans shall be available on the project site at all times.

DGS GENERAL SERVICES

Department of General Services
Architecture & Engineering Sections
State of California
Real Estate Services Division
Project Management & Development Branch
707 Third Street, Suite 4-105
West Sacramento, California 95605

REGISTERED PROFESSIONAL ENGINEER
MARSHALL ROBERTS
No. S-G173
STRUCTURAL
STATE OF CALIFORNIA
1/21/22

DMV
State of California
Department of Motor Vehicles

Issue

No.	Date	Description
1	9/2/22	

Project
SANTA MARIA FIELD OFFICE REPLACEMENT

2770 SANTA MARIA WAY
SANTA MARIA, CA 93455
SANTA BARBARA COUNTY

MOTOR VEHICLES

Supervisor	Designed	Drawn
J.DIGIORGIO	M.ROBERTS	M.ROBERTS

DSA App No. | SFM Permit No.

Sheet Title
SHEARWALL FRAMING ELEVATIONS

Project Number
DGS000000140725

Sheet Scale

Sheet Number
S242

Copyright © 2020, California Department of General Services- Real Estate Services Division

C:\Projects\DGS000000140725_STR_Marshall.Roberts.rvt
1/21/2022 2:26:56 PM

RELATIVE BORDER SCALE IN INCHES 0 1 2

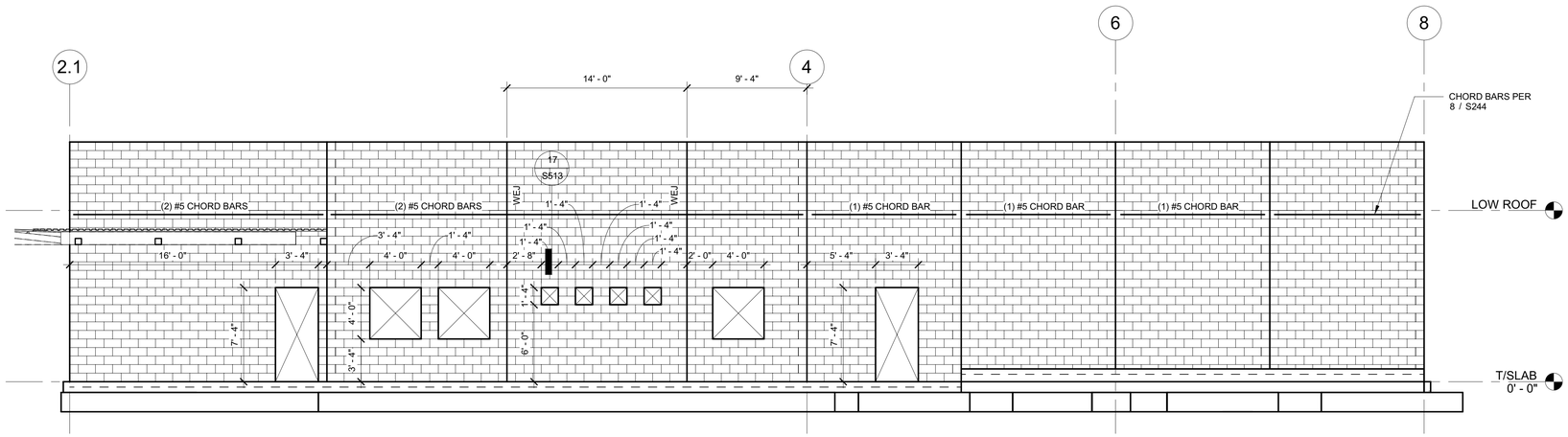

NOTES:
1. TEST DRIVE CANOPY NOT SHOWN FOR CLARITY

18 SHEARWALL ELEVATION EXTERIOR WEST

3/16" = 1'-0"

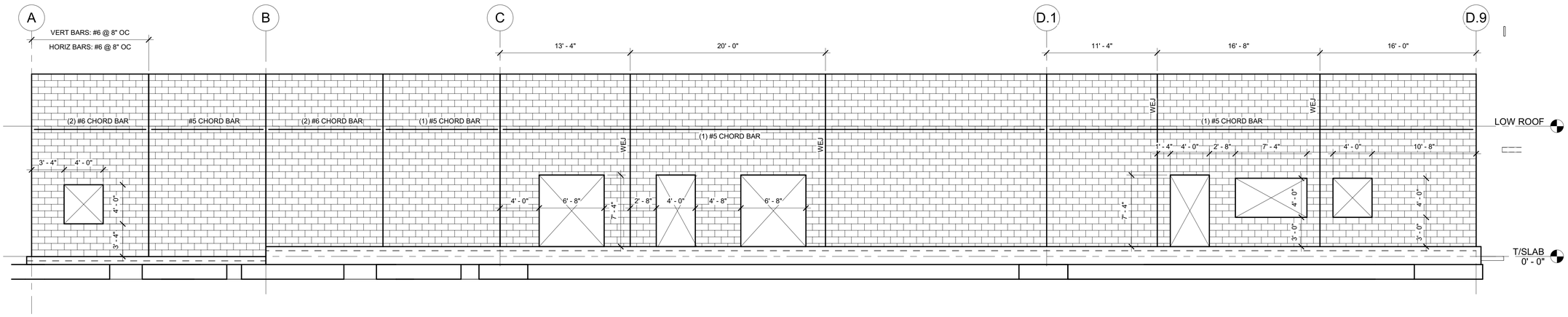

NOTES:
1. TEST DRIVE CANOPY NOT SHOWN FOR CLARITY.
2. EMPLOYEE PATIO WALL AND FRAMING NOT SHOWN FOR CLARITY.

20 SHEARWALL ELEVATION EXTERIOR SOUTH

3/16" = 1'-0"

IDENTIFICATION STAMP
DIV. OF THE STATE ARCHITECT
APP: 03-121324 INC:
REVIEWED FOR
SS ☐ FLS ☐ ACS ☑
DATE: 09/14/2022

OFFICE OF THE STATE FIRE MARSHAL
APPROVED FIRE AND PANIC ONLY
09/07/22
21-0233
Approval of this plan does not authorize or approve any omission or deviation from applicable regulations. Final approval is subject to field inspection. One set of approved plans shall be available on the project site at all times.

DGS GENERAL SERVICES

Department of General Services
Architecture & Engineering Sections
State of California
Real Estate Services Division
Project Management & Development Branch
707 Third Street, Suite 4-105
West Sacramento, California 95605

REGISTERED PROFESSIONAL ENGINEER
MARSHALL ROBERTS
No. S-6173
STRUCTURAL
STATE OF CALIFORNIA
1/21/22

DMV
State of California
Department of Motor Vehicles

Issue

No.	Date	Description
1	9/2/22	

Project
SANTA MARIA FIELD OFFICE REPLACEMENT
2770 SANTA MARIA WAY
SANTA MARIA, CA 93455
SANTA BARBARA COUNTY
MOTOR VEHICLES

Supervisor	Designed	Drawn
J.DIGIORGIO	M.ROBERTS	M.ROBERTS

DSA App No. | SFM Permit No.

Sheet Title
SHEARWALL FRAMING ELEVATIONS

Project Number
DGS000000140725

Sheet Scale
Sheet Number
S243

Copyright © 2020, California Department of General Services- Real Estate Services Division

C:\Projects\DGS000000140725_STR_Marshall.Roberts.rvt
1/21/2022 2:26:57 PM
RELATIVE BORDER SCALE IN INCHES

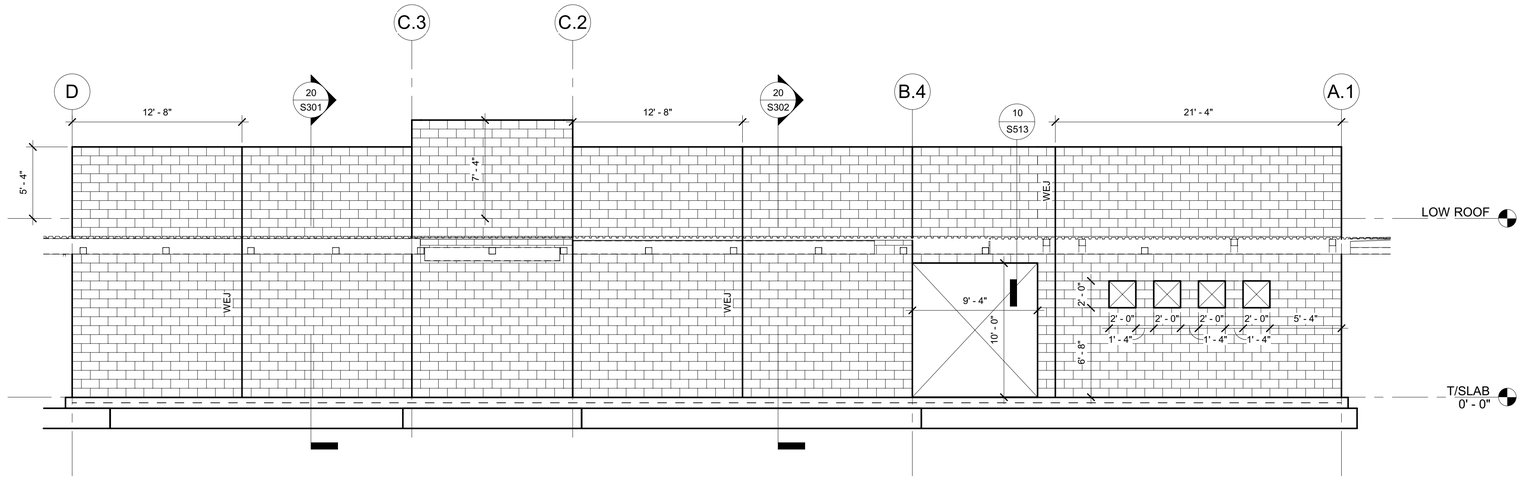

14 SHEARWALL ELEVATION EXTERIOR NORTH — 3/16" = 1'-0"

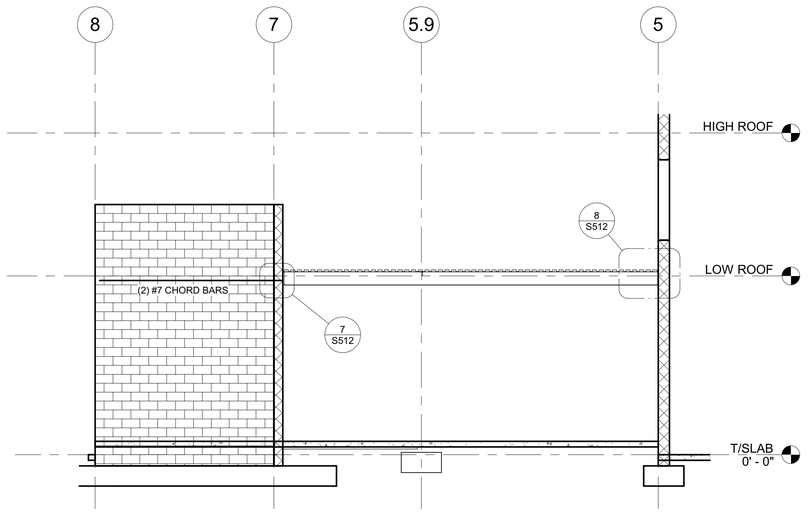

8 SHEARWALL ELEVATION GRIDLINE D.1 — 3/16" = 1'-0"

IDENTIFICATION STAMP
DIV. OF THE STATE ARCHITECT
APP: 03-121324 INC:
REVIEWED FOR
SS ☐ FLS ☐ ACS ☑
DATE: 09/14/2022

OFFICE OF THE STATE FIRE MARSHAL
APPROVED FIRE AND PANIC ONLY
09/07/22
21-0233
Approval of this plan does not authorize or approve any omission or deviation from applicable regulations. Final approval is subject to field inspection. One set of approved plans shall be available on the project site at all times.

GENERAL SERVICES
Department of General Services
Architecture & Engineering Sections
State of California
Real Estate Services Division
Project Management & Development Branch
707 Third Street, Suite 4-105
West Sacramento, California 95605

REGISTERED PROFESSIONAL ENGINEER
MARSHALL ROBERTS
No. S-6173
STRUCTURAL
STATE OF CALIFORNIA
1/21/22

DMV
State of California
Department of Motor Vehicles

Issue

No.	Date	Description
1	9/2/22	

Project
SANTA MARIA FIELD OFFICE REPLACEMENT
2770 SANTA MARIA WAY
SANTA MARIA, CA 93455
SANTA BARBARA COUNTY

MOTOR VEHICLES

Supervisor	Designed	Drawn
J.DIGIORGIO	M.ROBERTS	M.ROBERTS

DSA App No. | SFM Permit No.

Sheet Title
SHEARWALL FRAMING ELEVATIONS

Project Number
DGS000000140725

Sheet Scale

Sheet Number
S244

Copyright © 2020, California Department of General Services- Real Estate Services Division

C:\Projects\DGS000000140725_STR_Marshall.Roberts.rvt
1/21/2022 2:26:57 PM

RELATIVE BORDER SCALE IN INCHES 0 1 2

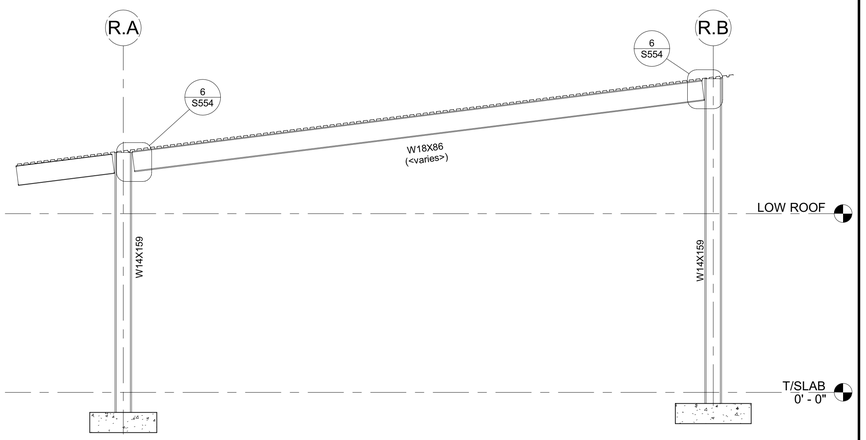

18 MOMENT FRAME ELEVATION R.1 AND R.4 LINES — 3/16" = 1'-0"

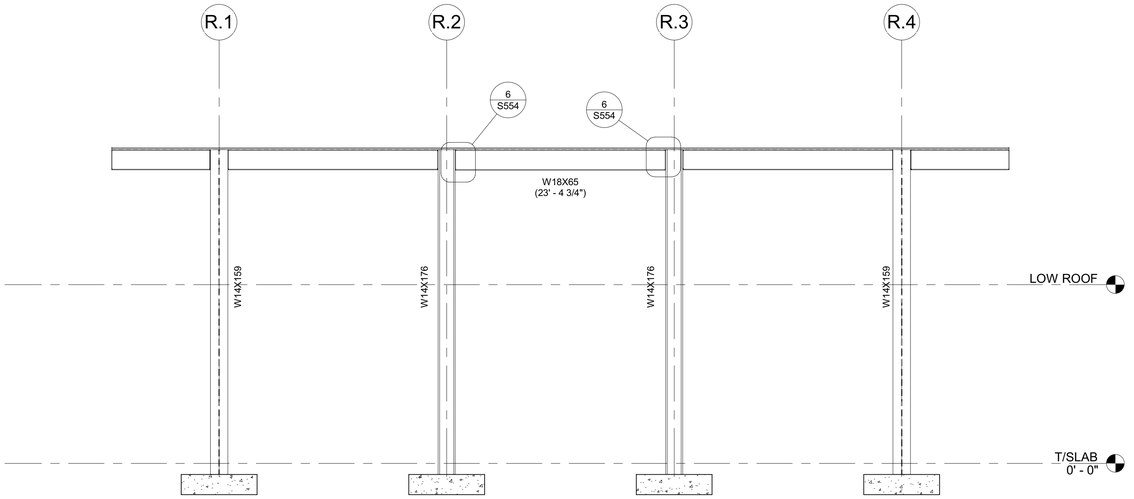

10 MOMENT FRAME ELEVATION R.B LINE — 3/16" = 1'-0"

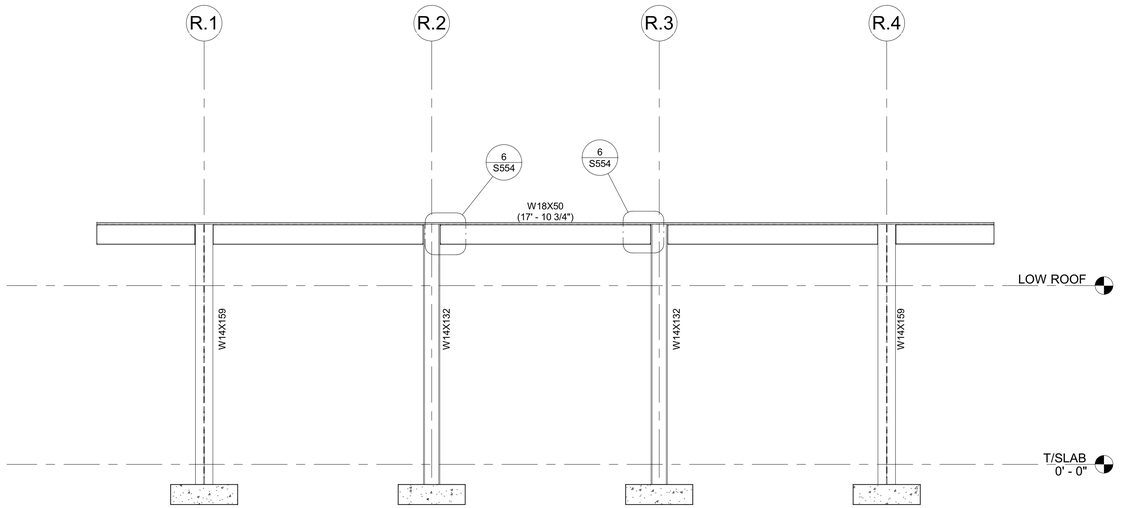

12 MOMENT FRAME ELEVATION R.A LINE — 3/16" = 1'-0"

IDENTIFICATION STAMP
DIV. OF THE STATE ARCHITECT
APP: 03-121324 INC:
REVIEWED FOR
SS ☐ FLS ☐ ACS ☑
DATE: 09/14/2022

OFFICE OF THE STATE FIRE MARSHAL
APPROVED FIRE AND PANIC ONLY
09/07/22
21-0233
Approval of this plan does not authorize or approve any omission or deviation from applicable regulations. Final approval is subject to field inspection. One set of approved plans shall be available on the project site at all times.

GENERAL SERVICES
Department of General Services
Architecture & Engineering Sections
State of California
Real Estate Services Division
Project Management & Development Branch
707 Third Street, Suite 4-105
West Sacramento, California 95605

REGISTERED PROFESSIONAL ENGINEER
MARSHALL ROBERTS
No. S-6173
STRUCTURAL
STATE OF CALIFORNIA
1/21/22

DMV
State of California
Department of Motor Vehicles

Issue

No.	Date	Description
1	9/2/22	

Project
SANTA MARIA FIELD OFFICE REPLACEMENT
2770 SANTA MARIA WAY
SANTA MARIA, CA 93455
SANTA BARBARA COUNTY

MOTOR VEHICLES

Supervisor	Designed	Drawn
J.DIGIORGIO	M.ROBERTS	M.ROBERTS

DSA App No. | SFM Permit No.

Sheet Title
STEEL MOMENT FRAME ELEVATIONS

Project Number
DGS000000140725

Sheet Scale
Sheet Number
S251

Copyright © 2020, California Department of General Services- Real Estate Services Division

C:\Projects\DGS000000140725_STR_Marshall.Roberts.rvt
1/21/2022 2:26:58 PM
RELATIVE BORDER SCALE IN INCHES

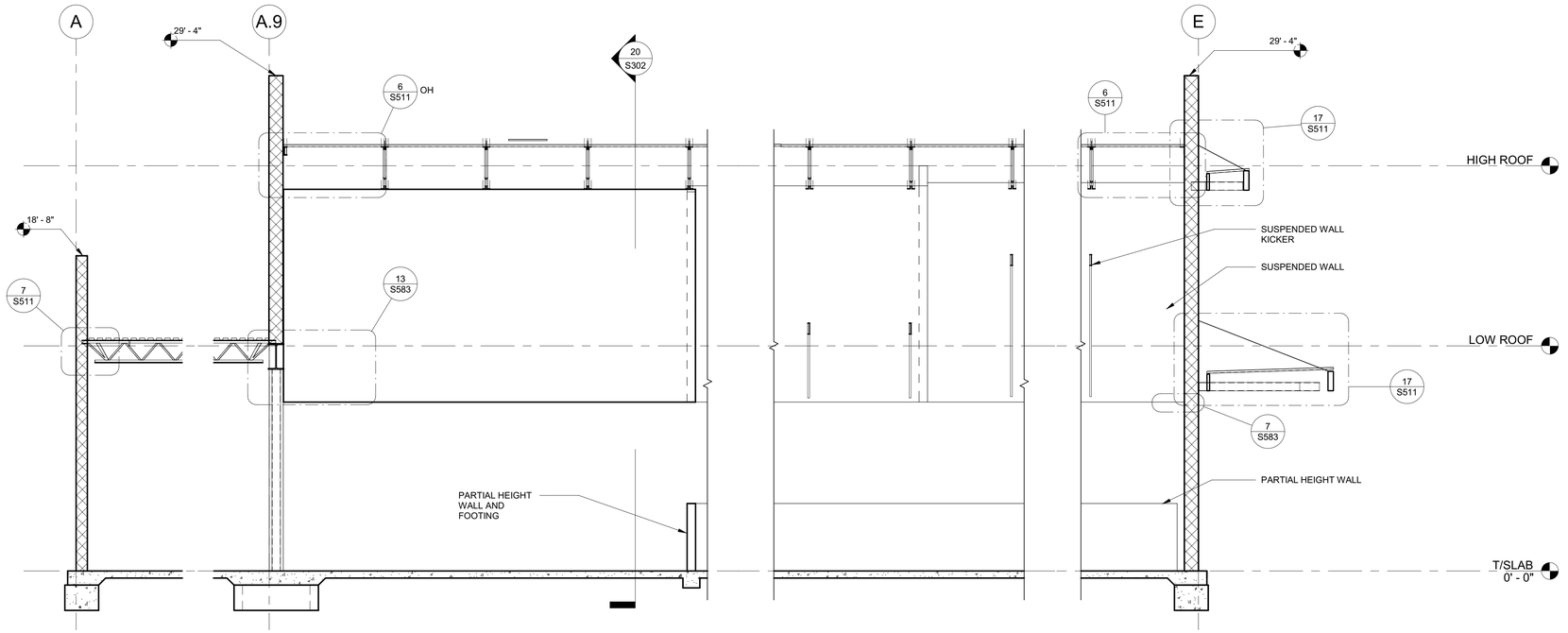

18 LONGITUDINAL SECTION — 1/4" = 1'-0"

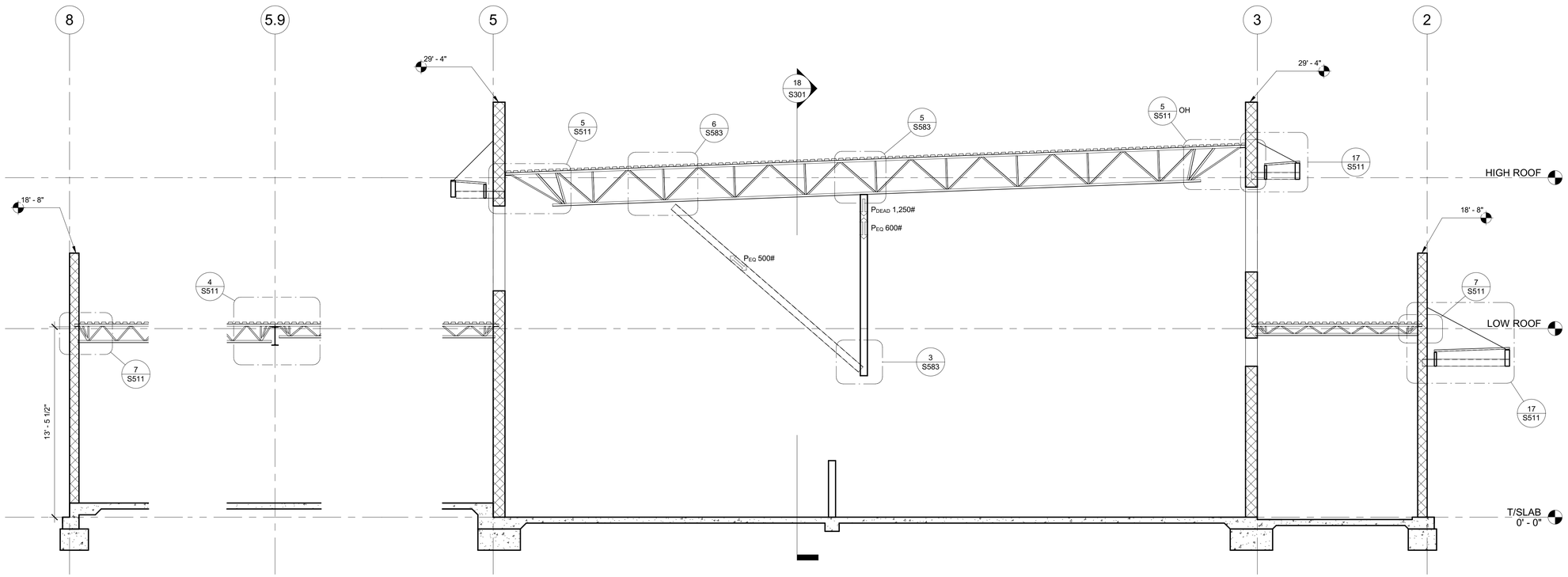

20 SECTION AT PRODUCTION TERMINALS AND PUBLIC AREA — 1/4" = 1'-0"

IDENTIFICATION STAMP
DIV. OF THE STATE ARCHITECT
APP: 03-121324 INC:
REVIEWED FOR
SS ☐ FLS ☐ ACS ☑
DATE: 09/14/2022

OFFICE OF THE STATE FIRE MARSHAL
APPROVED FIRE AND PANIC ONLY
09/07/22
21-0233
Approval of this plan does not authorize or approve any omission or deviation from applicable regulations. Final approval is subject to field inspection. One set of approved plans shall be available on the project site at all times.

GENERAL SERVICES
Department of General Services
Architecture & Engineering Sections
State of California
Real Estate Services Division
Project Management & Development Branch
707 Third Street, Suite 4-105
West Sacramento, California 95605

REGISTERED PROFESSIONAL ENGINEER
MARSHALL ROBERTS
No. S-6173
STRUCTURAL
STATE OF CALIFORNIA
1/21/22

DMV
State of California
Department of Motor Vehicles

Issue

No.	Date	Description
1	9/2/22	

Project
SANTA MARIA FIELD OFFICE REPLACEMENT
2770 SANTA MARIA WAY
SANTA MARIA, CA 93455
SANTA BARBARA COUNTY

MOTOR VEHICLES

Supervisor	Designed	Drawn
J.DIGIORGIO	M.ROBERTS	M.ROBERTS

DSA App No. | SFM Permit No.

Sheet Title
STRUCTURAL BUILDING SECTIONS

Project Number
DGS000000140725

Sheet Scale
Sheet Number
S301

Copyright © 2020, California Department of General Services: Real Estate Services Division

C:\Projects\DGS000000140725_STR_Marshall Roberts.rvt
1/21/2022 2:27:00 PM

RELATIVE BORDER SCALE IN INCHES 0 1 2

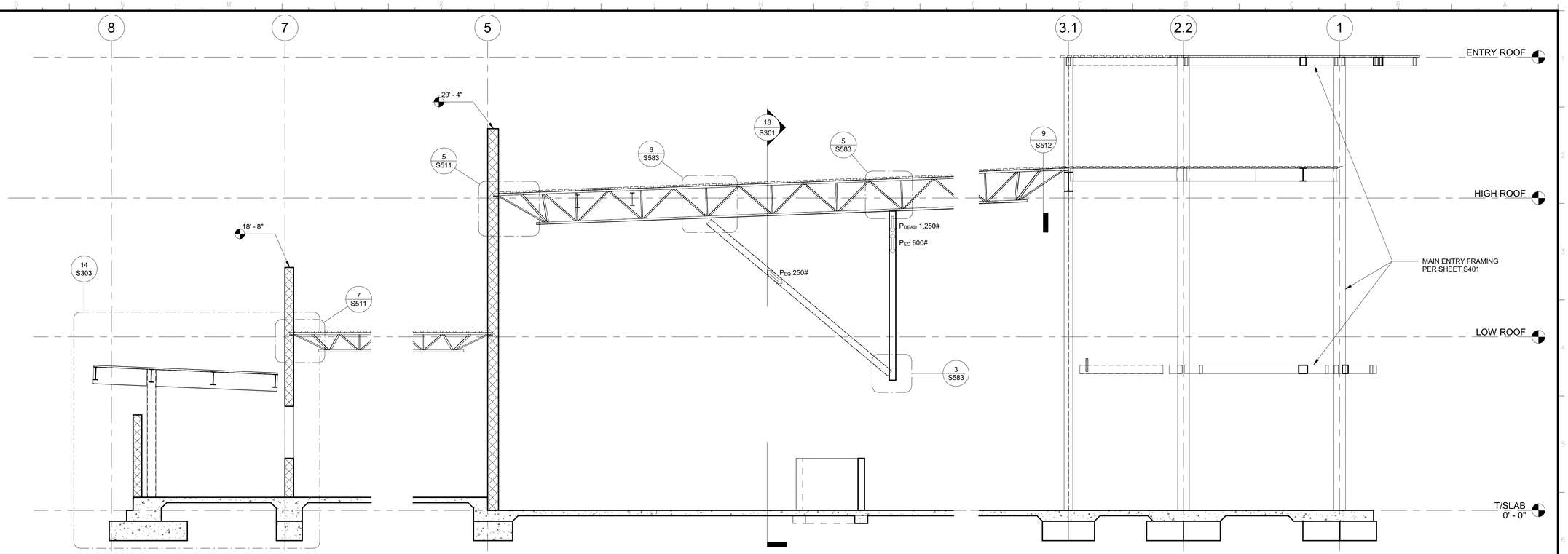

18 SECTION AT MAIN ENTRY — 1/4" = 1'-0"

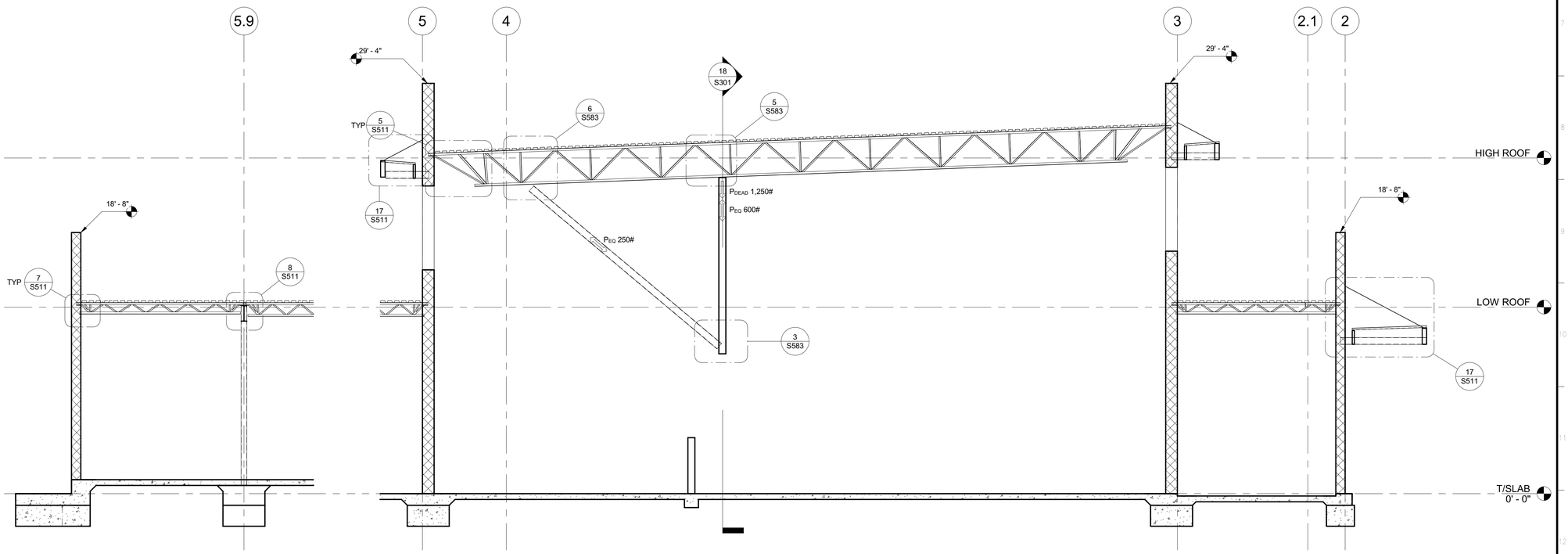

20 SECTION AT CAMERA STATION — 1/4" = 1'-0"

IDENTIFICATION STAMP
DIV. OF THE STATE ARCHITECT
APP: 03-121324 INC:
REVIEWED FOR
SS ☐ FLS ☐ ACS ☑
DATE: 09/14/2022

OFFICE OF THE STATE FIRE MARSHAL
APPROVED FIRE AND PANIC ONLY
09/07/22
21-0233
Approval of this plan does not authorize or approve any omission or deviation from applicable regulations. Final approval is subject to field inspection. One set of approved plans shall be available on the project site at all times.

DGS GENERAL SERVICES

Department of General Services
Architecture & Engineering Sections
State of California
Real Estate Services Division
Project Management & Development Branch
707 Third Street, Suite 4-105
West Sacramento, California 95605

REGISTERED PROFESSIONAL ENGINEER
MARSHALL ROBERTS
No. S-6173
STRUCTURAL
STATE OF CALIFORNIA
1/21/22

DMV
State of California
Department of Motor Vehicles

Issue

No.	Date	Description
1	9/2/22	

Project
SANTA MARIA FIELD OFFICE REPLACEMENT
2770 SANTA MARIA WAY
SANTA MARIA, CA 93455
SANTA BARBARA COUNTY

MOTOR VEHICLES

Supervisor	Designed	Drawn
J.DIGIORGIO	M.ROBERTS	M.ROBERTS

DSA App No. | SFM Permit No.

Sheet Title
STRUCTURAL BUILDING SECTIONS

Project Number
DGS000000140725

Sheet Scale
Sheet Number
S302

Copyright © 2020, California Department of General Services- Real Estate Services Division

C:\Projects\DGS000000140725_STR_Marshall Roberts.rvt
1/21/2022 2:27:01 PM

RELATIVE BORDER SCALE IN INCHES

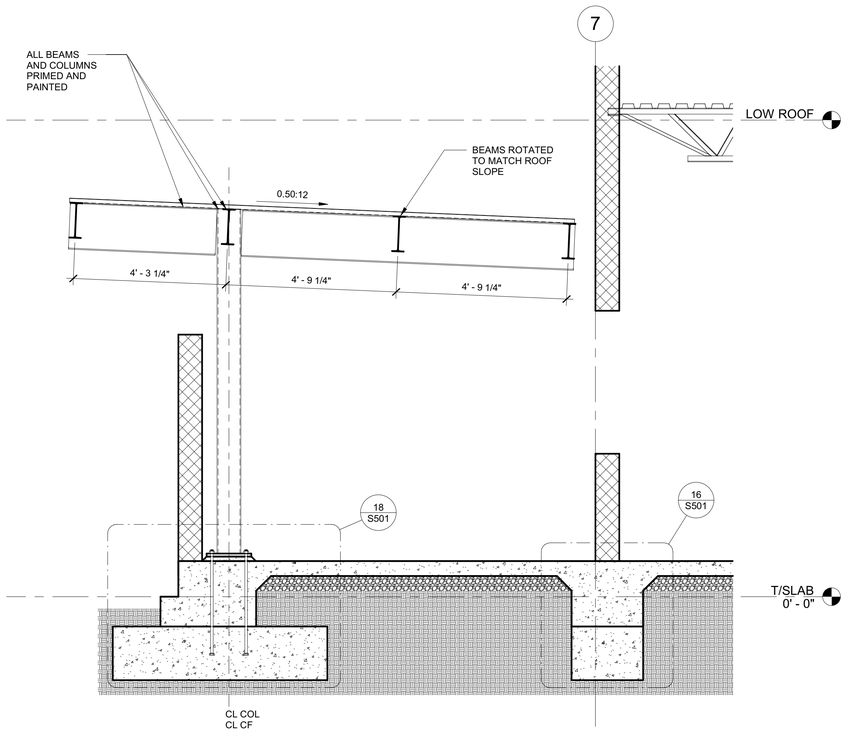

14 SECTION AT EMPLOYEE PATIO

1/2" = 1'-0"

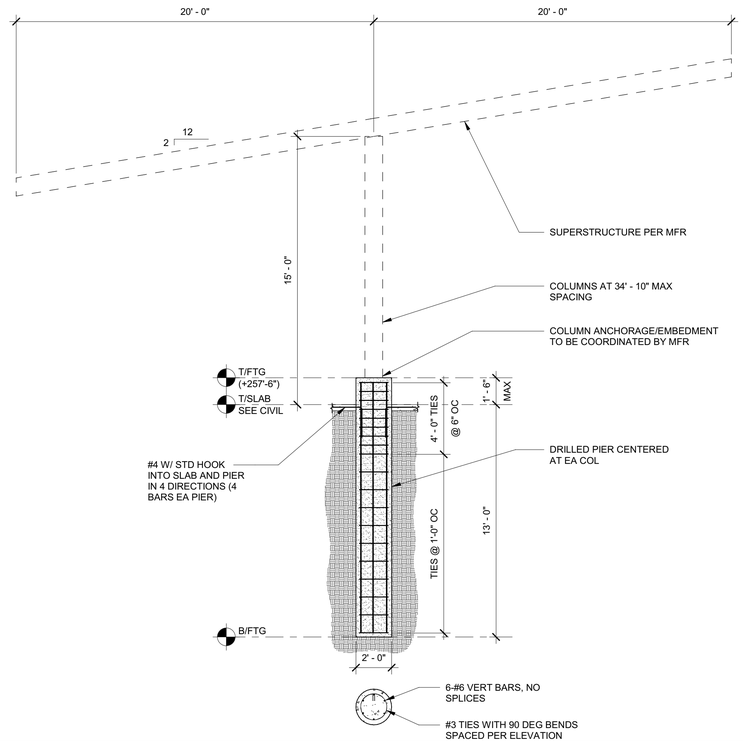

16 FOOTING AT PV CANOPY

1/4" = 1'-0"

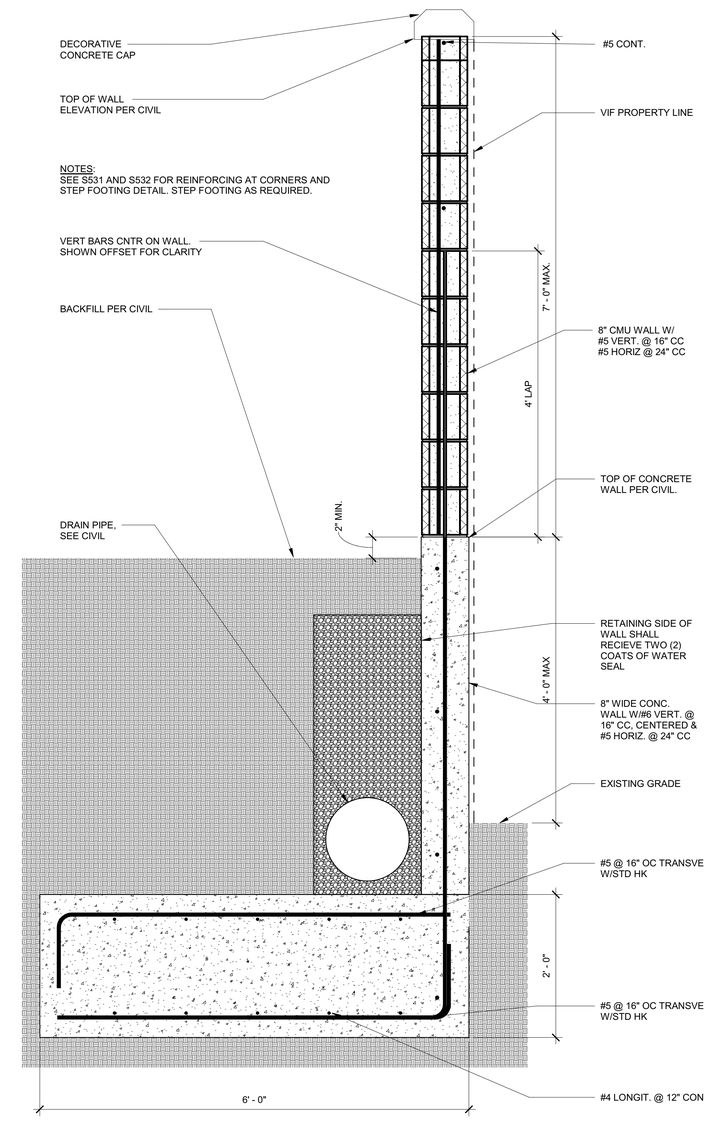

8 PERIMETER WALL

1" = 1'-0"

IDENTIFICATION STAMP
DIV. OF THE STATE ARCHITECT
APP: 03-121324 INC:
REVIEWED FOR
SS ☐ FLS ☐ ACS ☑
DATE: 09/14/2022

OFFICE OF THE STATE FIRE MARSHAL
APPROVED FIRE AND PANIC ONLY
09/07/22
21-0233
Approval of this plan does not authorize or approve any omission or deviation from applicable regulations. Final approval is subject to field inspection. One set of approved plans shall be available on the project site at all times.

DGS GENERAL SERVICES
Department of General Services
Architecture & Engineering Sections
State of California
Real Estate Services Division
Project Management & Development Branch
707 Third Street, Suite 4-105
West Sacramento, California 95605

REGISTERED PROFESSIONAL ENGINEER
MARSHALL ROBERTS
No. S-6173
STRUCTURAL
STATE OF CALIFORNIA
1/21/22

DMV
State of California
Department of Motor Vehicles

Issue

No.	Date	Description
1	9/2/22	

Project
SANTA MARIA FIELD OFFICE REPLACEMENT
2770 SANTA MARIA WAY
SANTA MARIA, CA 93455
SANTA BARBARA COUNTY
MOTOR VEHICLES

Supervisor	Designed	Drawn
J.DIGIORGIO	M.ROBERTS	M.ROBERTS

DSA App No. | SFM Permit No.

Sheet Title
STRUCTURAL SECTIONS

Project Number
DGS000000140725

Sheet Scale
Sheet Number
S303

Copyright © 2020, California Department of General Services- Real Estate Services Division

C:\Projects\DGS000000140725_STR_Marshall.Roberts.rvt
1/21/2022 2:27:03 PM
RELATIVE BORDER SCALE IN INCHES

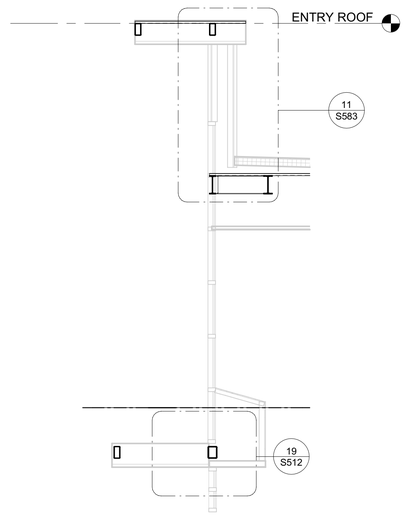

18 FRONT ENTRY SECTION — 1/4" = 1'-0"

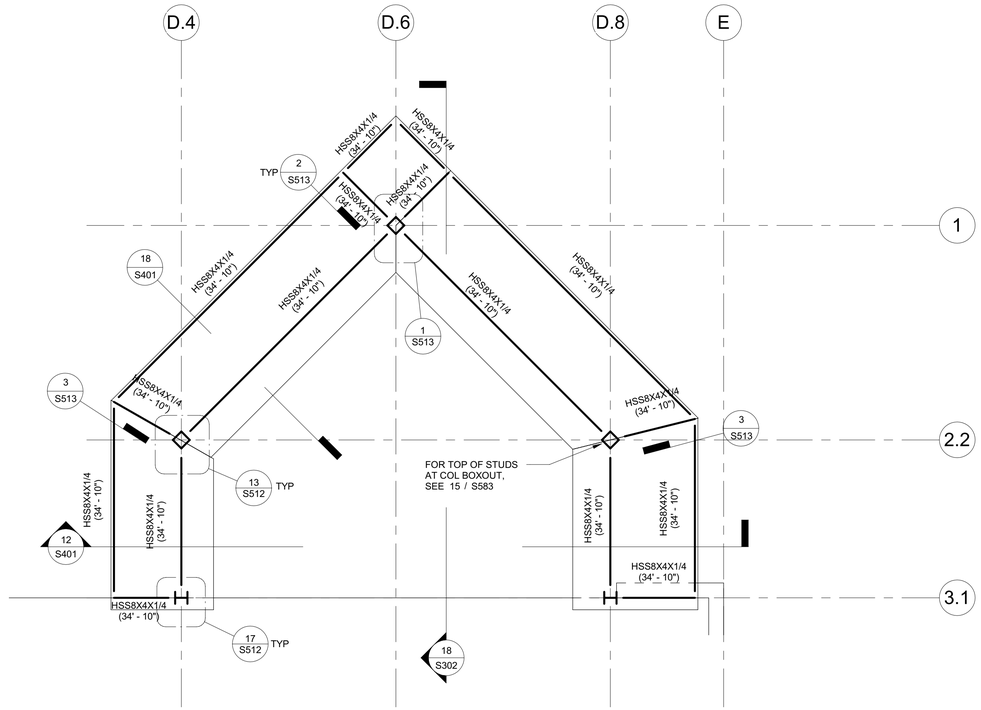

10 TOP OF FRONT ENTRY EYEBROW FRAMING — 1/4" = 1'-0"

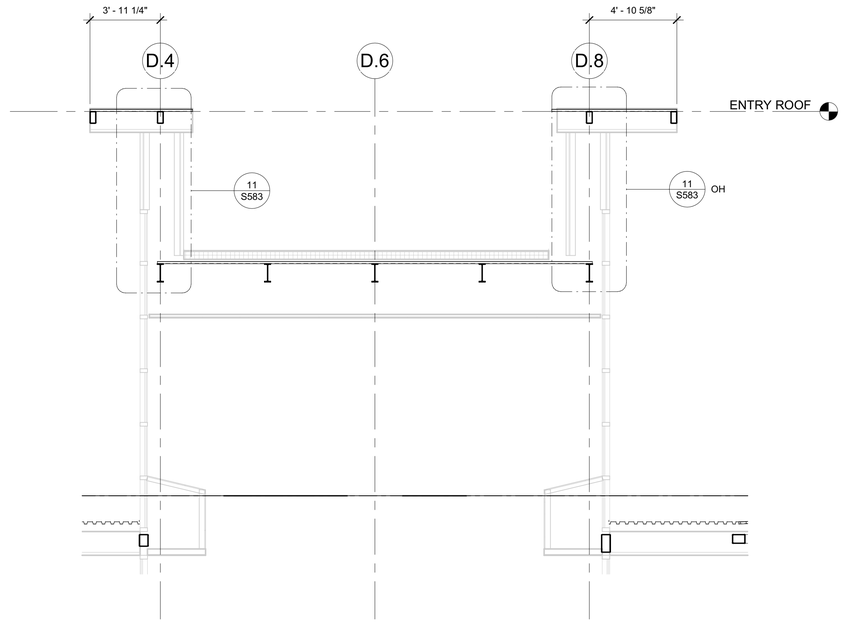

12 SECTION AT FRONT ENTRY — 1/4" = 1'-0"

IDENTIFICATION STAMP
DIV. OF THE STATE ARCHITECT
APP: 03-121324 INC:
REVIEWED FOR
SS ☐ FLS ☐ ACS ☑
DATE: 09/14/2022

OFFICE OF THE STATE FIRE MARSHAL
APPROVED FIRE AND PANIC ONLY
09/07/22
21-0233
Approval of this plan does not authorize or approve any omission or deviation from applicable regulations. Final approval is subject to field inspection. One set of approved plans shall be available on the project site at all times.

GENERAL SERVICES
Department of General Services
Architecture & Engineering Sections
State of California
Real Estate Services Division
Project Management & Development Branch
707 Third Street, Suite 4-105
West Sacramento, California 95605

REGISTERED PROFESSIONAL ENGINEER
MARSHALL ROBERTS
No. S-6173
STRUCTURAL
STATE OF CALIFORNIA
1/21/22

DMV
State of California
Department of Motor Vehicles

Issue No.	Date	Description
1	9/2/22	

Project
SANTA MARIA FIELD OFFICE REPLACEMENT

2770 SANTA MARIA WAY
SANTA MARIA, CA 93455
SANTA BARBARA COUNTY

MOTOR VEHICLES

Supervisor	Designed	Drawn
J.DIGIORGIO	M.ROBERTS	M.ROBERTS

DSA App No. | SFM Permit No.

Sheet Title
FRONT ENTRY PARTIAL PLAN AND SECTIONS

Project Number
DGS000000140725

Sheet Scale

Sheet Number
S401

Copyright © 2020, California Department of General Services- Real Estate Services Division

C:\Projects\DGS000000140725_STR_Marshall Roberts.rvt
1/21/2022 2:27:06 PM

RELATIVE BORDER SCALE IN INCHES 0 1 2

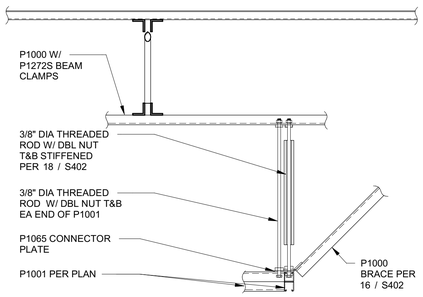

17 WOMEN'S STAFF 2 — 1" = 1'-0"

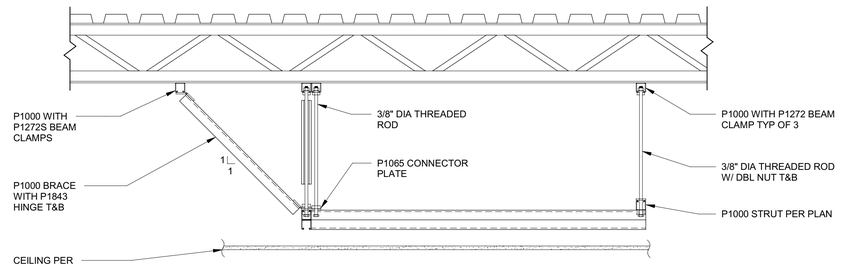

13 WOMEN'S PUBLIC ELEVATION 1 — 1" = 1'-0"

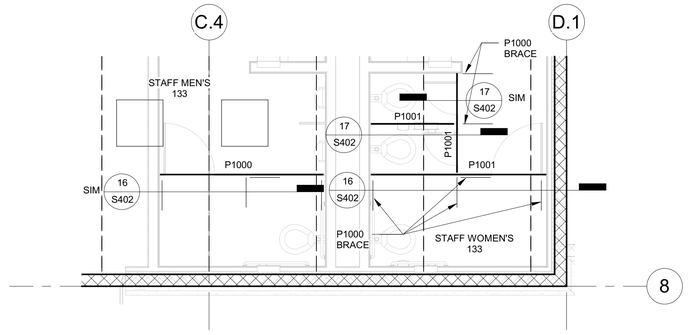

5 EMPLOYEE RESTROOM CEILING PLAN — 1/4" = 1'-0"

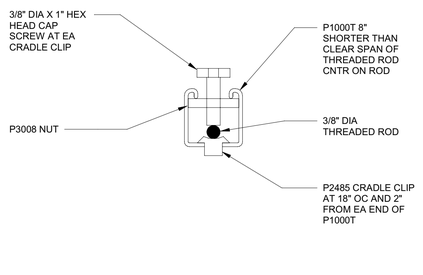

18 STIFFENED ROD — 6" = 1'-0"

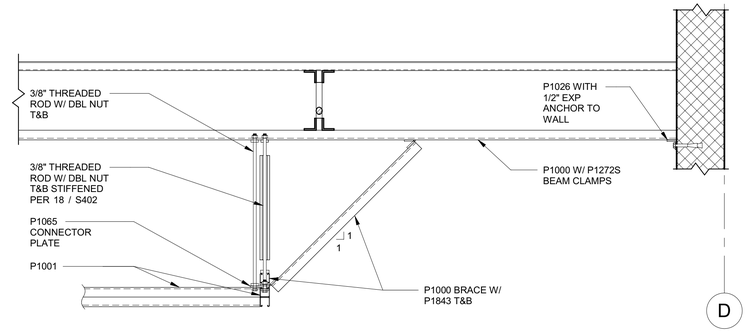

14 WOMEN'S PUBLIC 2 — 1" = 1'-0"

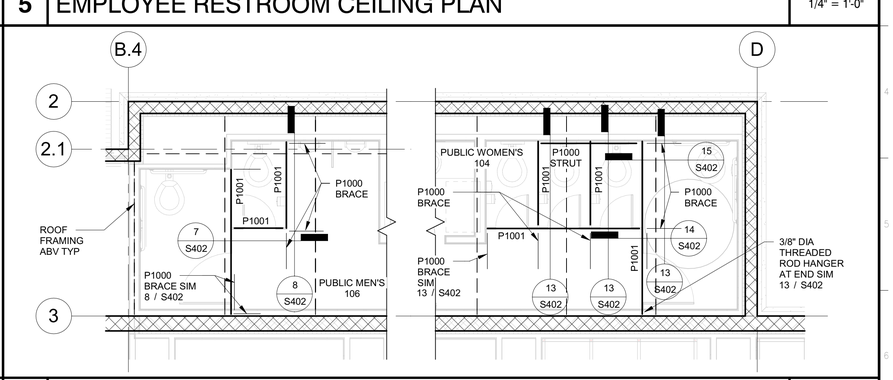

6 PUBLIC RESTROOM CEILING PLAN — 1/4" = 1'-0"

UNISTRUT FRAMING NOTES:

1. FRAMING DESIGNATED PXXXX REFER TO UNISTRUT PARTS. PROVIDE PARTS SPECIFIED OR EQUAL.
2. PARTS ARE FASTENED TO CHANNEL STRUTS WITH 3/8" DIA CHANNEL NUTS. PARTS FASTENED THROUGH 9/16" DIA PRE-DRILLED HOLES SHALL BE FASTENED WITH 1/2" DIA BOLTS AND CHANNEL NUTS.
3. IF THE SPECIFIC DETAIL FOR BRACING OR HANGING STRUT IS NOT SHOWN, A SIMILAR DETAILS SHALL BE USED.
4. STRUTS AT CEILING ARE ALIGNED WITH THE RESTROOM PARTITIONS. SEE ARCH DRAWINGS FOR EXACT LOCATIONS. STRUTS SHALL BE LOCATED ABOVE CEILING FRAMING WITH DBL NUTS TO PREVENT SWAYING.

19 UNISTRUT NOTES — 1" = 1'-0"

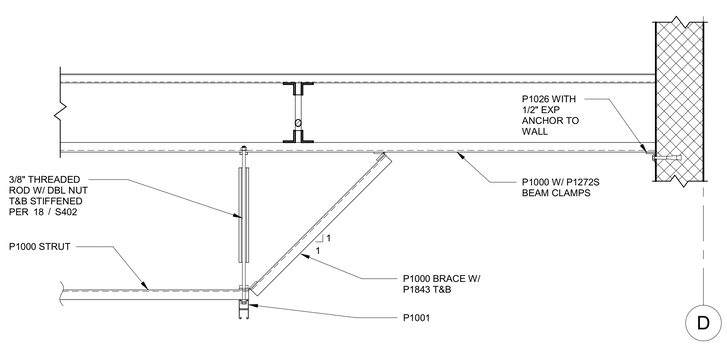

15 WOMEN'S PUBLIC 3 — 1" = 1'-0"

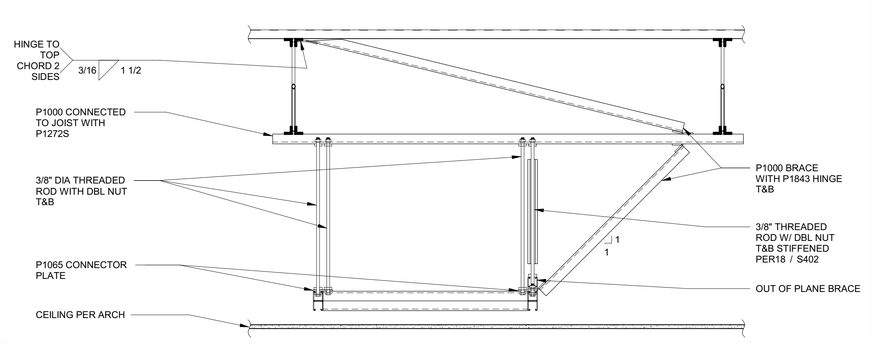

7 MEN'S PUBLIC ELEVATION 1 — 1" = 1'-0"

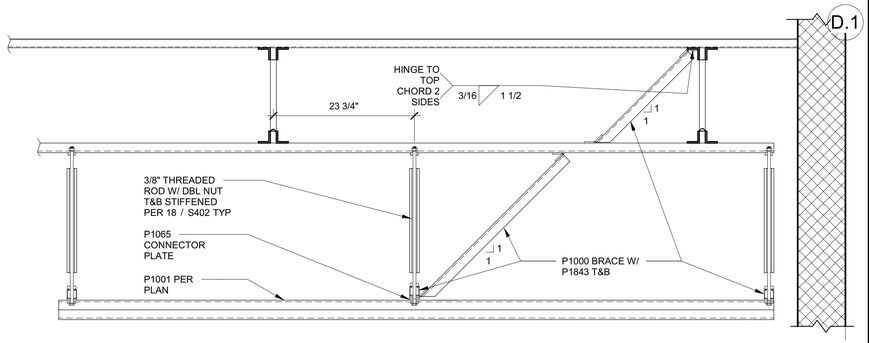

16 WOMEN'S STAFF 1 — 1" = 1'-0"

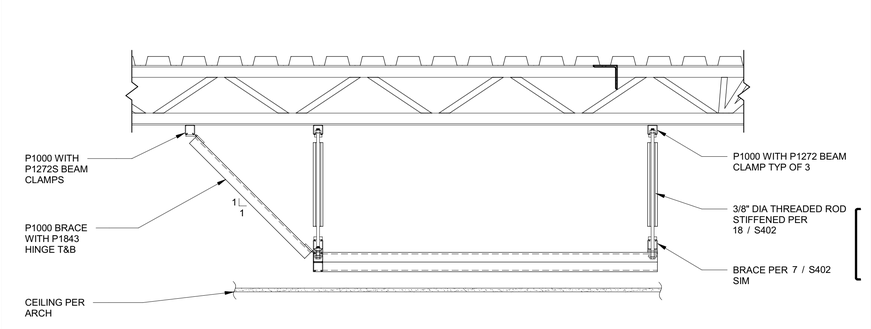

8 MEN'S PUBLIC ELEVATION 2 — 1" = 1'-0"

IDENTIFICATION STAMP
DIV. OF THE STATE ARCHITECT
APP: 03-121324 INC:
REVIEWED FOR
SS ☐ FLS ☐ ACS ☑
DATE: 09/14/2022

OFFICE OF THE STATE FIRE MARSHAL
APPROVED FIRE AND PANIC ONLY
09/07/22
21-0233
Approval of this plan does not authorize or approve any omission or deviation from applicable regulations. Final approval is subject to field inspection. One set of approved plans shall be available on the project site at all times.

DGS GENERAL SERVICES

Department of General Services
Architecture & Engineering Sections
State of California
Real Estate Services Division
Project Management & Development Branch
707 Third Street, Suite 4-105
West Sacramento, California 95605

REGISTERED PROFESSIONAL ENGINEER
MARSHALL ROBERTS
No. S-G173
STRUCTURAL
STATE OF CALIFORNIA
1/21/22

DMV
State of California
Department of Motor Vehicles

Issue

No.	Date	Description
1	9/2/22	

Project
SANTA MARIA FIELD OFFICE REPLACEMENT
2770 SANTA MARIA WAY
SANTA MARIA, CA 93455
SANTA BARBARA COUNTY

MOTOR VEHICLES

Supervisor	Designed	Drawn
Approver	Designer	Author

DSA App No. | SFM Permit No.

Sheet Title
RESTROOM PARTITIONS

Project Number
DGS000000140725

Sheet Scale
Sheet Number
S402

Copyright © 2020, California Department of General Services - Real Estate Services Division

C:\Projects\DGS000000140725_STR_Marshall Roberts.rvt
1/21/2022 2:27:09 PM

RELATIVE BORDER SCALE IN INCHES

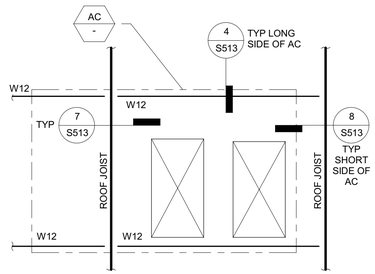

9 AC PERP TO FRAMING — 1/2" = 1'-0"

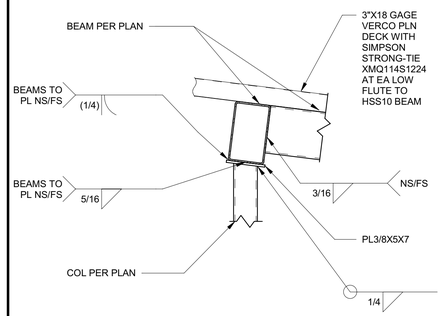

5 TRASH ENCL BEAM — 1" = 1'-0"

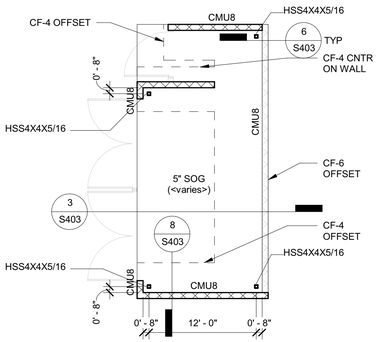

1 FOUNDATION PLAN — 1/8" = 1'-0"

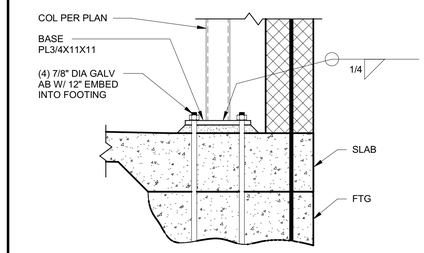

6 TRASH ENCL COL BASE — 1" = 1'-0"

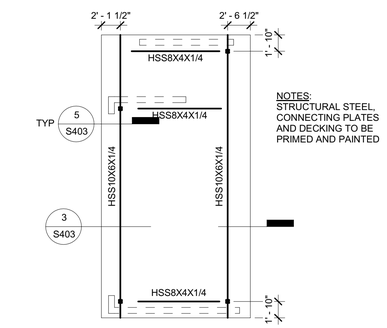

NOTES:
STRUCTURAL STEEL, CONNECTING PLATES AND DECKING TO BE PRIMED AND PAINTED

2 FOUNDATION PLAN — 1/8" = 1'-0"

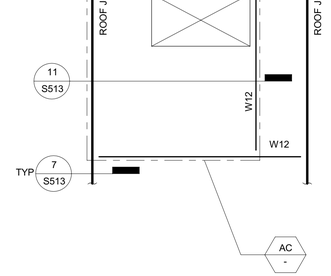

11 AC PARALLEL TO FRMG — 1/2" = 1'-0"

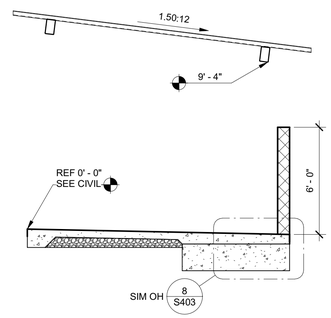

3 TRASH ENCLOSURE SEC — 1/4" = 1'-0"

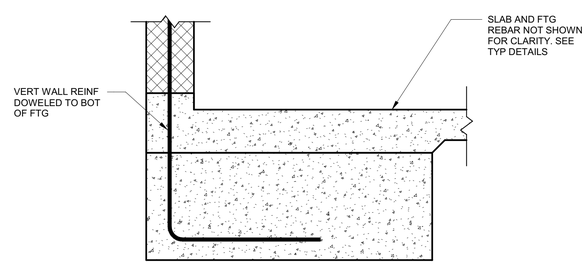

8 TRASH ENCL FTG — 1" = 1'-0"

IDENTIFICATION STAMP
DIV. OF THE STATE ARCHITECT
APP: 03-121324 INC:
REVIEWED FOR
SS ☐ FLS ☐ ACS ☑
DATE: 09/14/2022

OFFICE OF THE STATE FIRE MARSHAL
APPROVED FIRE AND PANIC ONLY
09/07/22
21-0233
Approval of this plan does not authorize or approve any omission or deviation from applicable regulations. Final approval is subject to field inspection. One set of approved plans shall be available on the project site at all times.

GENERAL SERVICES

Department of General Services
Architecture & Engineering Sections
State of California
Real Estate Services Division
Project Management & Development Branch
707 Third Street, Suite 4-105
West Sacramento, California 95605

REGISTERED PROFESSIONAL ENGINEER
MARSHALL ROBERTS
No. S-G173
STRUCTURAL
STATE OF CALIFORNIA
1/21/22

DMV
State of California
Department of Motor Vehicles

Issue

No.	Date	Description
1	9/2/22	

Project
SANTA MARIA FIELD OFFICE REPLACEMENT

2770 SANTA MARIA WAY
SANTA MARIA, CA 93455
SANTA BARBARA COUNTY

MOTOR VEHICLES

Supervisor	Designed	Drawn
J.DIGIORGIO	M.ROBERTS	M.ROBERTS

DSA App No. | SFM Permit No.

Sheet Title
TRASH ENCLOSURE, AC ROOF FRAMING

Project Number
DGS000000140725

Sheet Scale

Sheet Number
S403

Copyright © 2020, California Department of General Services - Real Estate Services Division

C:\Projects\DGS000000140725_STR_Marshall.Roberts.rvt
1/21/2022 2:27:11 PM

RELATIVE BORDER SCALE IN INCHES

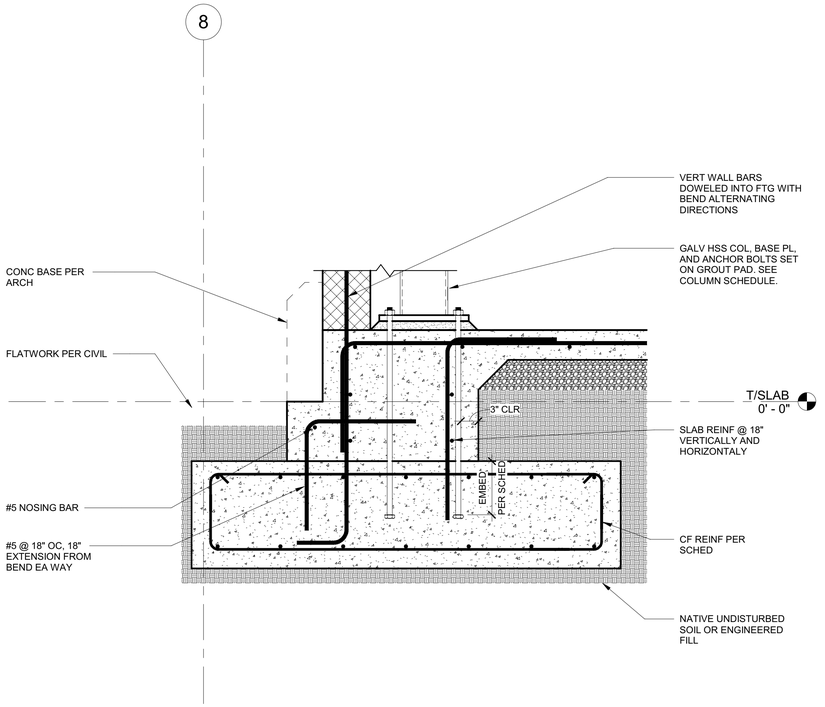

18 COLUMN AND WALL AT PATIO — 1" = 1'-0"

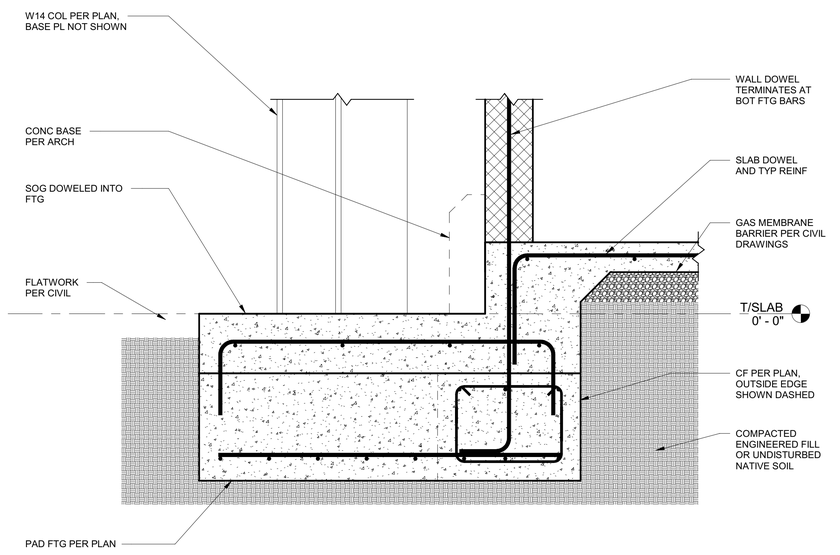

10 FOOTING AT CANOPY — 1" = 1'-0"

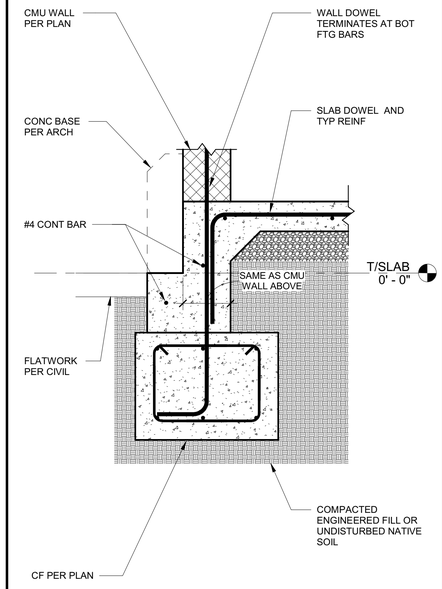

2 EDGE AT HIGH SLAB — 1" = 1'-0"

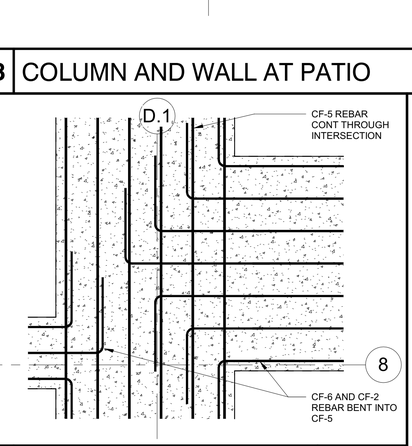

19 Detail 2 — 1/2" = 1'-0"

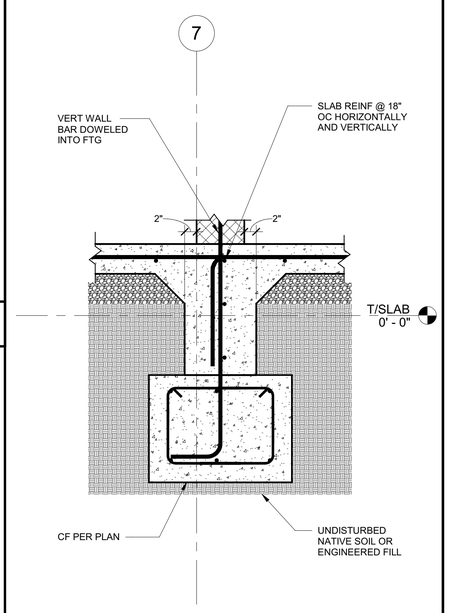

16 HIGH SLAB AT PATIO — 1" = 1'-0"

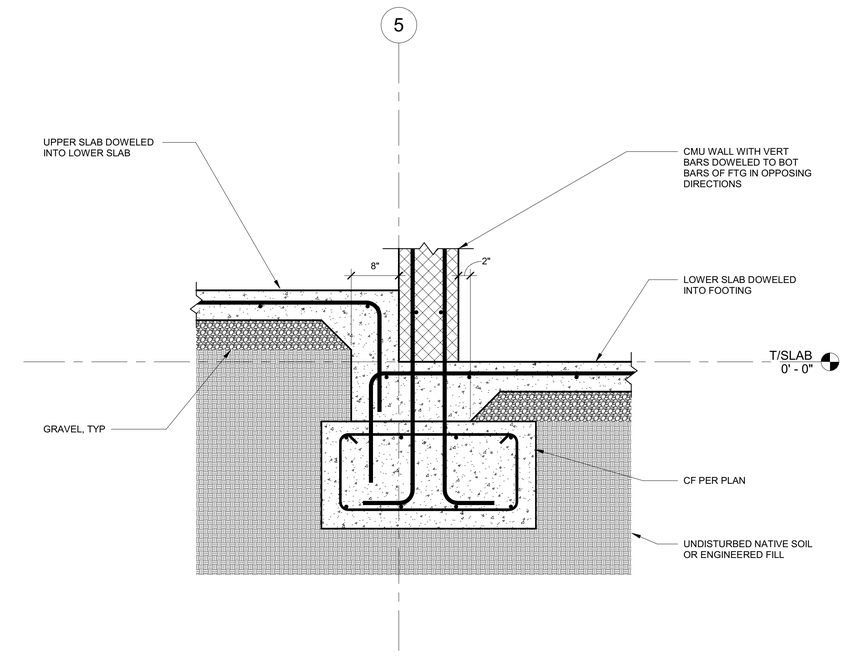

12 GRIDLINE 5 — 1" = 1'-0"

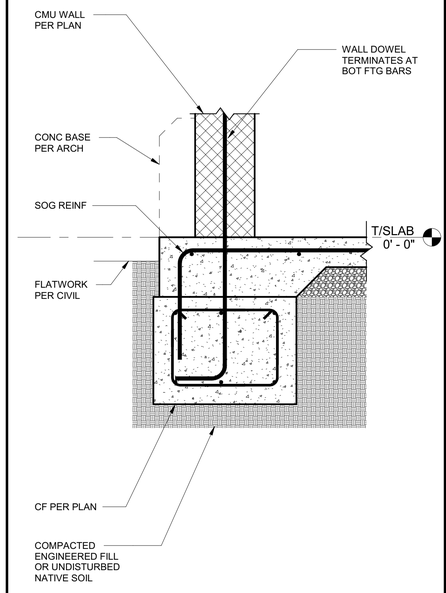

4 EDGE AT LOW SLAB — 1" = 1'-0"

C:\Projects\DGS000000140725_STR_Marshall Roberts.rvt
1/21/2022 2:27:13 PM

RELATIVE BORDER SCALE IN INCHES

IDENTIFICATION STAMP
DIV. OF THE STATE ARCHITECT
APP: 03-121324 INC: A
REVIEWED FOR
SS ☐ FLS ☐ ACS ☑
DATE: 09/14/2022

OFFICE OF THE STATE FIRE MARSHAL
APPROVED FIRE AND PANIC ONLY
09/07/22
21-0233
Approval of this plan does not authorize or approve any omission or deviation from applicable regulations. Final approval is subject to field inspection. One set of approved plans shall be available on the project site at all times.

DGS GENERAL SERVICES
Department of General Services
Architecture & Engineering Sections
State of California
Real Estate Services Division
Project Management & Development Branch
707 Third Street, Suite 4-105
West Sacramento, California 95605

REGISTERED PROFESSIONAL ENGINEER
MARSHALL ROBERTS
No. S-6173
STRUCTURAL
STATE OF CALIFORNIA
1/21/22

DMV
State of California
Department of Motor Vehicles

Issue

No.	Date	Description
1	9/2/22	

Project
SANTA MARIA FIELD OFFICE REPLACEMENT
2770 SANTA MARIA WAY
SANTA MARIA, CA 93455
SANTA BARBARA COUNTY

MOTOR VEHICLES

Supervisor	Designed	Drawn
J.DIGIORGIO	M.ROBERTS	M.ROBERTS

DSA App No. | SFM Permit No.

Sheet Title
FOUNDATION DETAILS

Project Number
DGS000000140725

Sheet Scale
Sheet Number
S501

Copyright © 2020, California Department of General Services: Real Estate Services Division

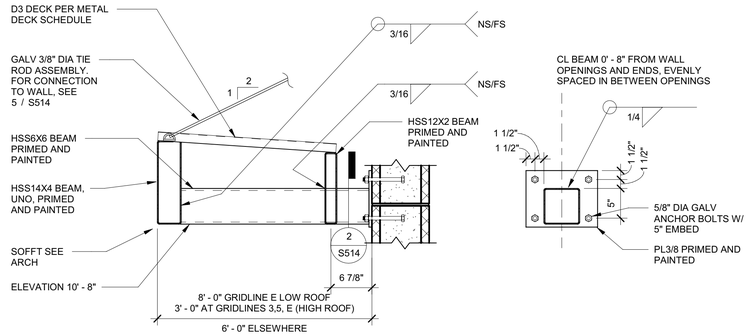

17 EYEBROW FRAMING — 1" = 1'-0"

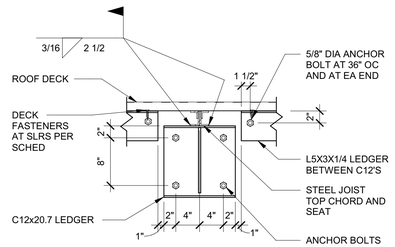

9 BEARING LEDGER — 1" = 1'-0"

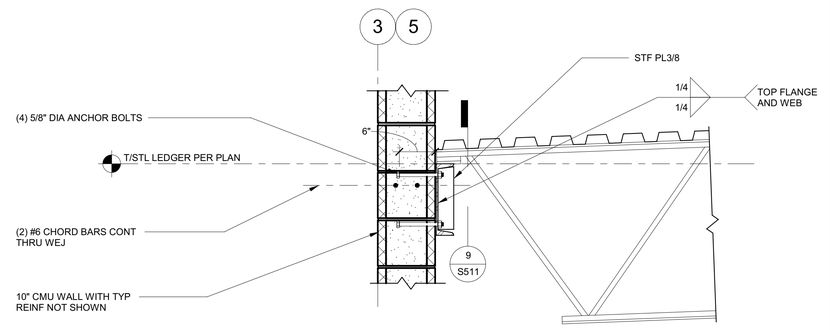

5 HIGH ROOF JOIST AT WALL — 1" = 1'-0"

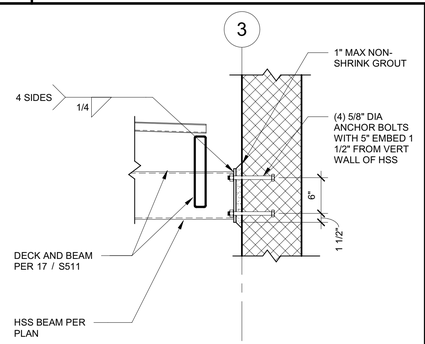

18 ENTRY AT WALL — 1" = 1'-0"

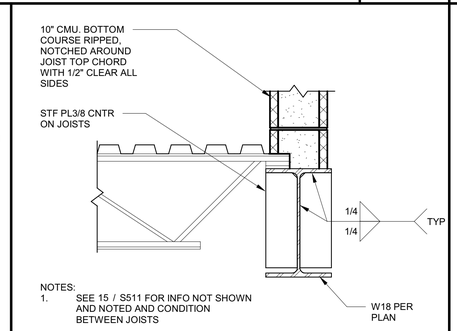

14 W18 BEAM AT A.9 — 1" = 1'-0"

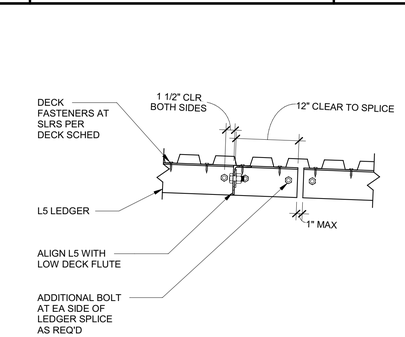

10 WALL ANCHORAGE — 1" = 1'-0"

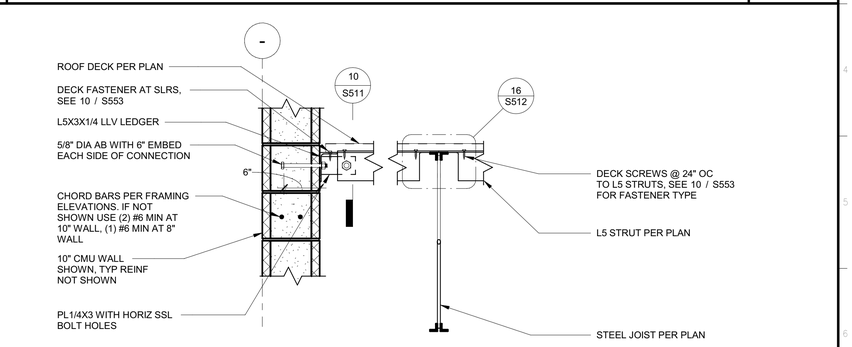

6 SUB-DIAPHRAGM STRUT — 1" = 1'-0"

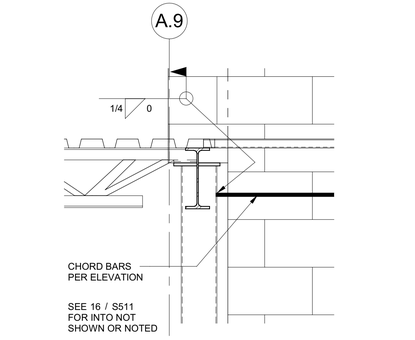

19 5 AT A.9 — 1" = 1'-0"

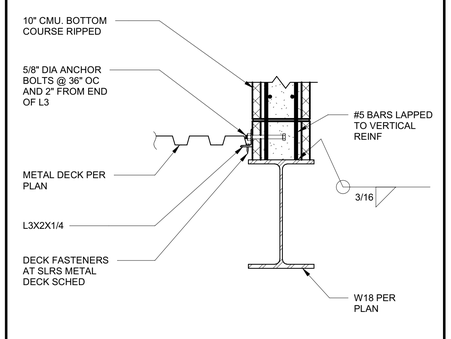

15 W18 BEAM AT A.9 — 1" = 1'-0"

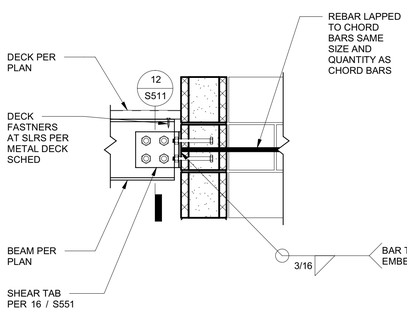

11 W10 BEAM AT A.9 — 1" = 1'-0"

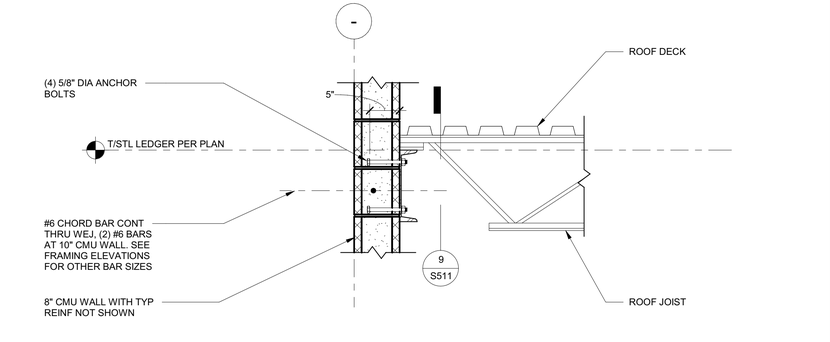

7 LOW ROOF JOIST AT WALL — 1" = 1'-0"

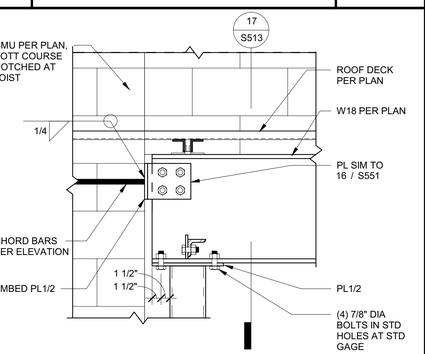

20 A.9 BEAM TO WALL — 1" = 1'-0"

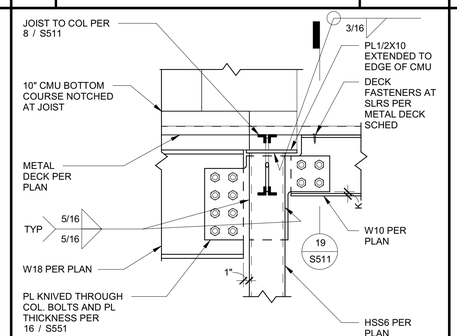

16 A.9 BEAM TO BEAM — 1" = 1'-0"

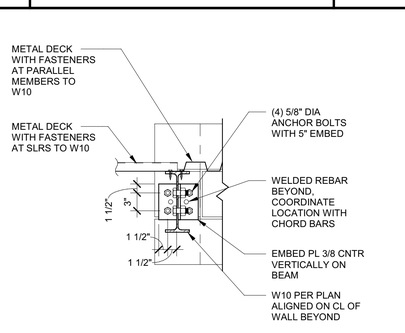

12 EMBED PLATE — 1" = 1'-0"

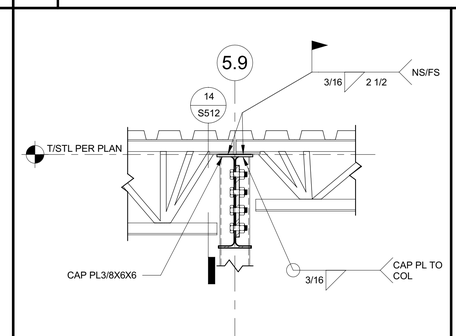

8 JOIST TO COLUMN — 1" = 1'-0"

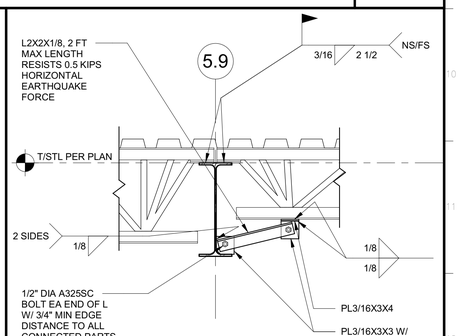

4 JOIST TO BEAM — 1" = 1'-0"

RELATIVE BORDER SCALE IN INCHES

IDENTIFICATION STAMP
DIV. OF THE STATE ARCHITECT
APP: 03-121324 INC:
REVIEWED FOR
SS ☐ FLS ☐ ACS ☑
DATE: 09/14/2022

OFFICE OF THE STATE FIRE MARSHAL
APPROVED FIRE AND PANIC ONLY
09/07/22
21-0233
Approval of this plan does not authorize or approve any omission or deviation from applicable regulations. Final approval is subject to field inspection. One set of approved plans shall be available on the project site at all times.

DGS GENERAL SERVICES
Department of General Services
Architecture & Engineering Sections
State of California
Real Estate Services Division
Project Management & Development Branch
707 Third Street, Suite 4-105
West Sacramento, California 95605

REGISTERED PROFESSIONAL ENGINEER
MARSHALL ROBERTS
No. S-G173
STRUCTURAL
STATE OF CALIFORNIA
1/21/22

DMV
State of California
Department of Motor Vehicles

Issue		
No.	Date	Description
1	9/2/22	

Project
SANTA MARIA FIELD OFFICE REPLACEMENT
2770 SANTA MARIA WAY
SANTA MARIA, CA 93455
SANTA BARBARA COUNTY
MOTOR VEHICLES

Supervisor	Designed	Drawn
J.DIGIORGIO	M.ROBERTS	M.ROBERTS

DSA App No. | SFM Permit No.

Sheet Title
FRAMING DETAILS

Project Number
DGS000000140725

Sheet Scale
Sheet Number
S511

Copyright © 2020, California Department of General Services- Real Estate Services Division

C:\Projects\DGS000000140725_STR_Marshall.Roberts.rvt
1/21/2022 2:27:16 PM

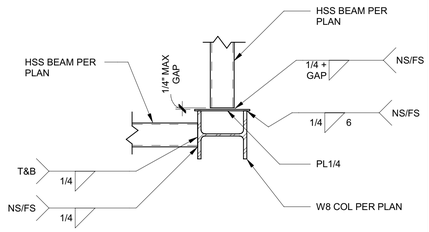

17 WF COL AT ENTRY — 1" = 1'-0"

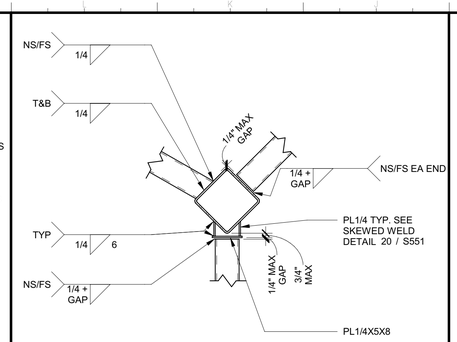

13 BEAMS AT ENTRY COL — 1" = 1'-0"

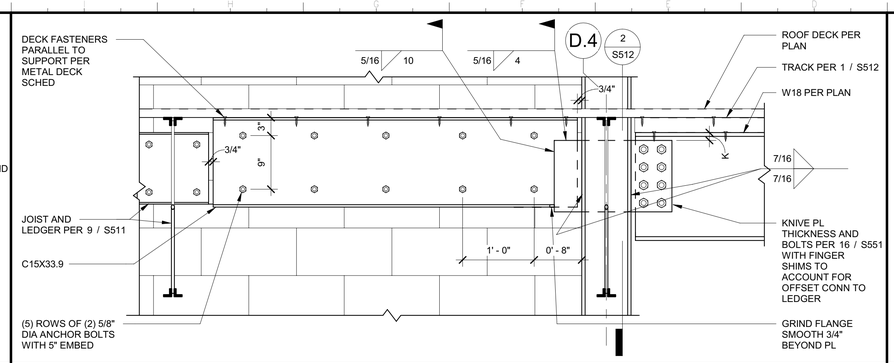

9 GRID 3 AND D.4 — 1" = 1'-0"

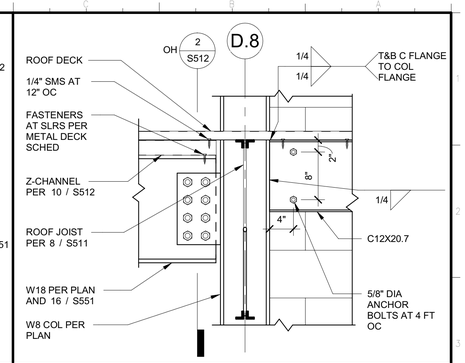

1 GRID 3 AND D.8 — 1" = 1'-0"

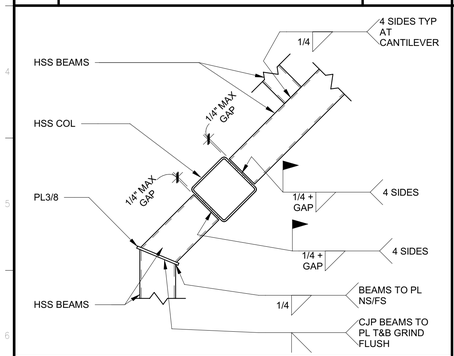

18 EYEBROW AT ENTRY — 1" = 1'-0"

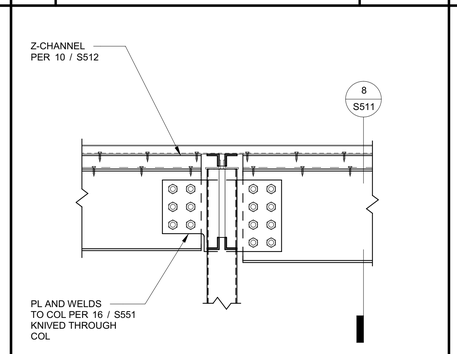

14 BEAM TO COL AT 5.9 — 1" = 1'-0"

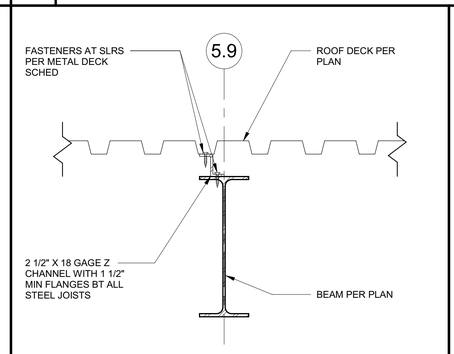

10 DECK TO LOW BEAM — 1 1/2" = 1'-0"

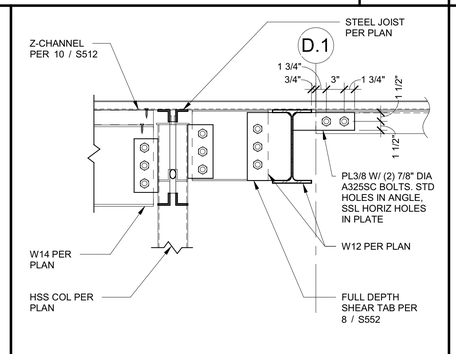

6 DRAGS AT D.1 AND 5.9 — 1" = 1'-0"

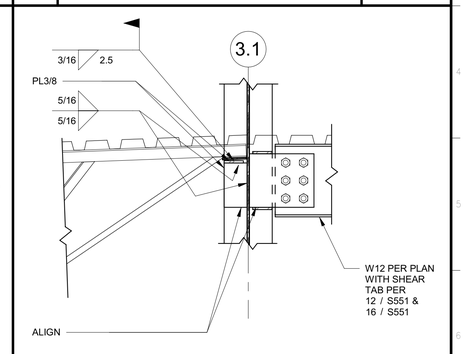

2 ENTRY TO WF COL — 1" = 1'-0"

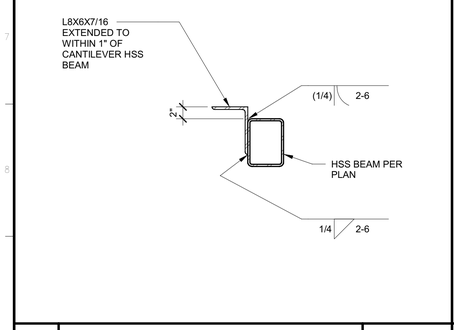

19 STOREFRONT SUPPORT — 1" = 1'-0"

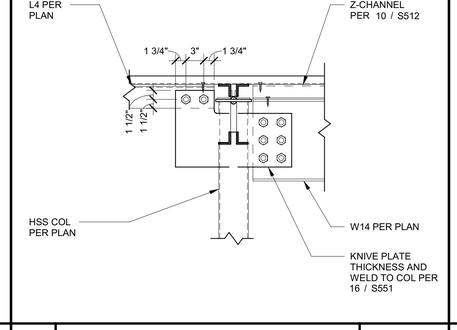

15 5.9 ANGLE TO COLUMN — 1" = 1'-0"

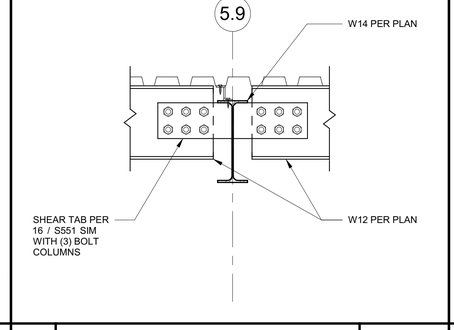

11 C AND 5.9 — 1" = 1'-0"

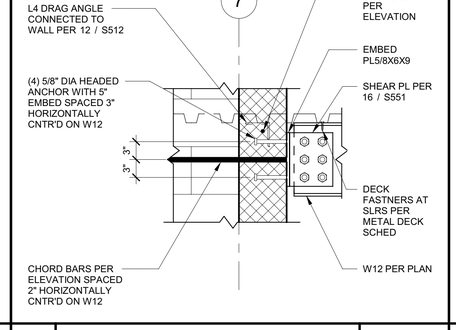

7 D.1 EMBED AT 7 — 1" = 1'-0"

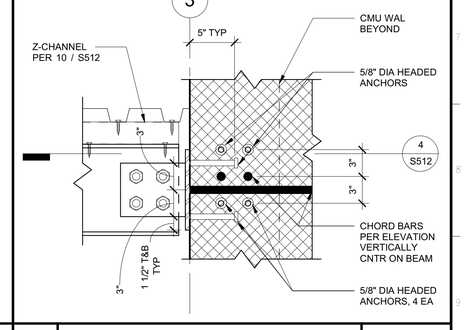

3 3 AND A.9 EMBEDS — 1 1/2" = 1'-0"

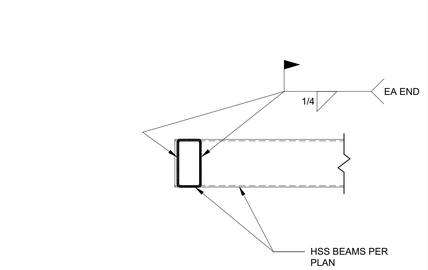

20 HSS BEAM TO BEAM — 1" = 1'-0"

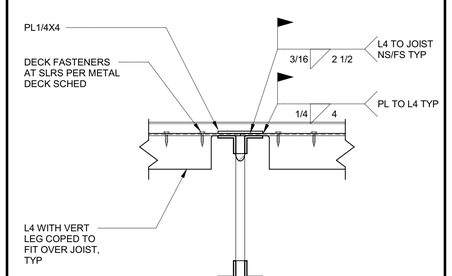

16 DRAG ANGLE AT JOIST — 1 1/2" = 1'-0"

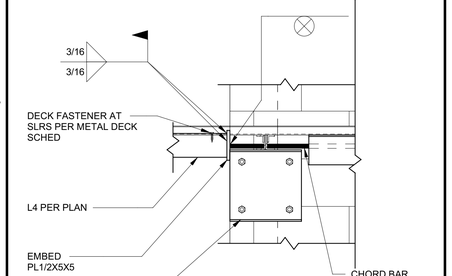

12 DRAG AT A.1 — 1" = 1'-0"

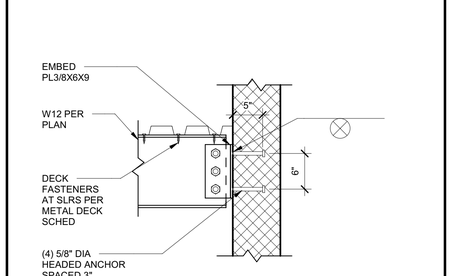

8 WF BEAM AT CMU WALL — 1" = 1'-0"

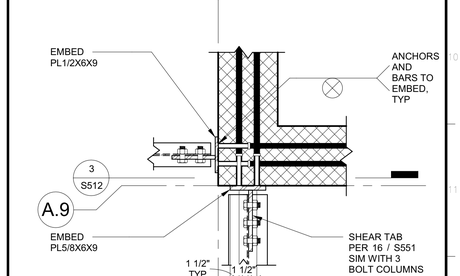

4 3 AND A.9 PLAN VIEW — 1" = 1'-0"

IDENTIFICATION STAMP
DIV. OF THE STATE ARCHITECT
APP: 03-121324 INC:
REVIEWED FOR
SS ☐ FLS ☐ ACS ☑
DATE: 09/14/2022

OFFICE OF THE STATE FIRE MARSHAL
APPROVED FIRE AND PANIC ONLY
09/07/22
21-0233
Approval of this plan does not authorize or approve any omission or deviation from applicable regulations. Final approval is subject to field inspection. One set of approved plans shall be available on the project site at all times.

DGS GENERAL SERVICES
Department of General Services
Architecture & Engineering Sections
State of California
Real Estate Services Division
Project Management & Development Branch
707 Third Street, Suite 4-105
West Sacramento, California 95605

REGISTERED PROFESSIONAL ENGINEER
MARSHALL ROBERTS
No. S-6173
STRUCTURAL
STATE OF CALIFORNIA
1/21/22

DMV
State of California
Department of Motor Vehicles

Issue

No.	Date	Description
1	9/2/22	

Project
SANTA MARIA FIELD OFFICE REPLACEMENT
2770 SANTA MARIA WAY
SANTA MARIA, CA 93455
SANTA BARBARA COUNTY
MOTOR VEHICLES

Supervisor	Designed	Drawn
J.DIGIORGIO	M.ROBERTS	M.ROBERTS

DSA App No. | SFM Permit No.

Sheet Title
FRAMING DETAILS

Project Number
DGS000000140725

Sheet Scale
Sheet Number
S512

Copyright © 2020, California Department of General Services, Real Estate Services Division

C:\Projects\DGS000000140725_STR_Marshall Roberts.rvt
1/21/2022 2:27:20 PM
24 x 36
RELATIVE BORDER SCALE IN INCHES

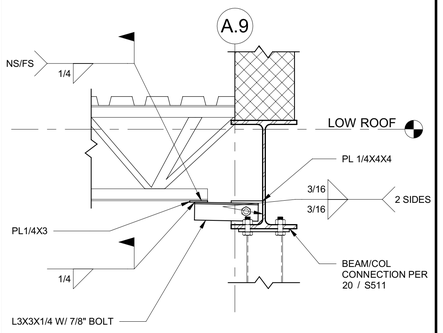

17 A.9 BEAM KICKER — 1" = 1'-0"

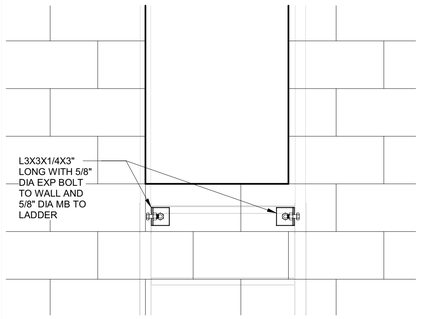

18 SHIP LADDER TOP — 1" = 1'-0"

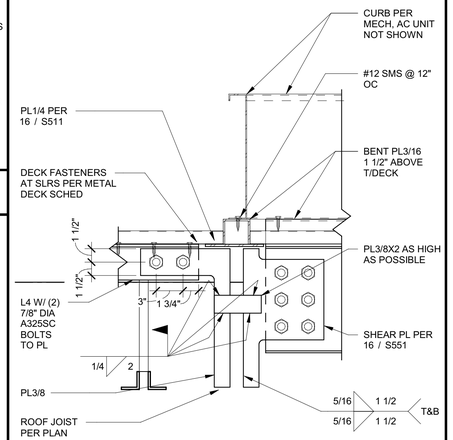

13 W12 AT 5.9 — 1 1/2" = 1'-0"

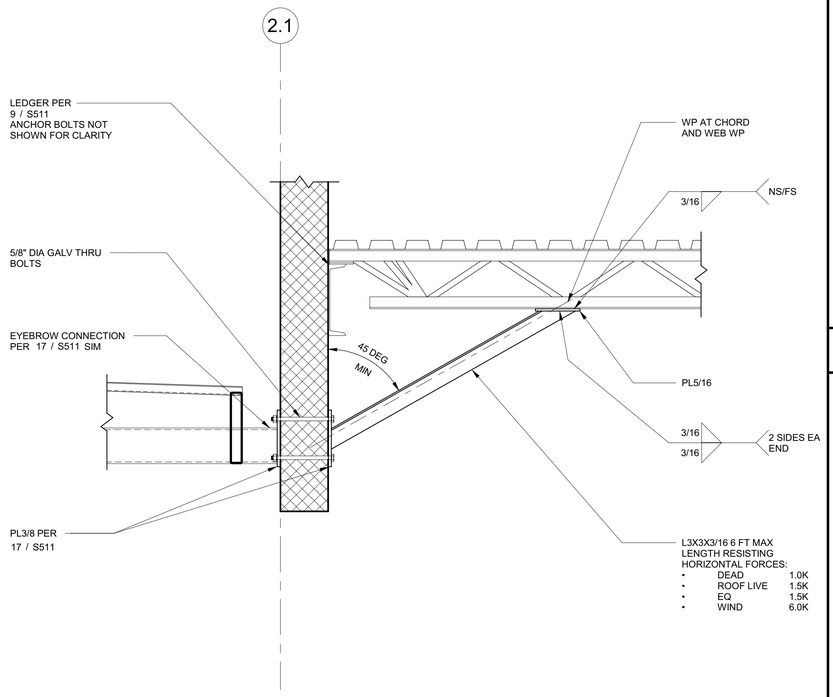

10 KICKER AT WEST ENTRY — 1" = 1'-0"

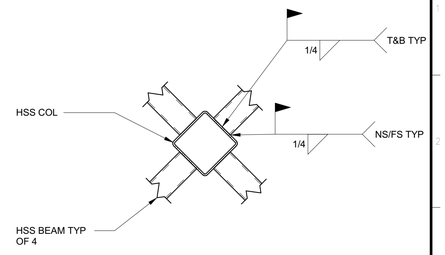

1 ENTRY CANTILEVER — 1" = 1'-0"

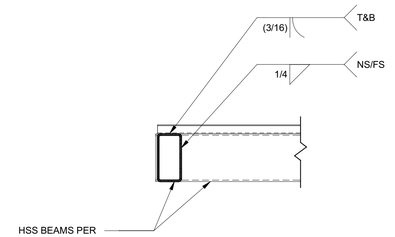

2 ENTRY CORNER — 1" = 1'-0"

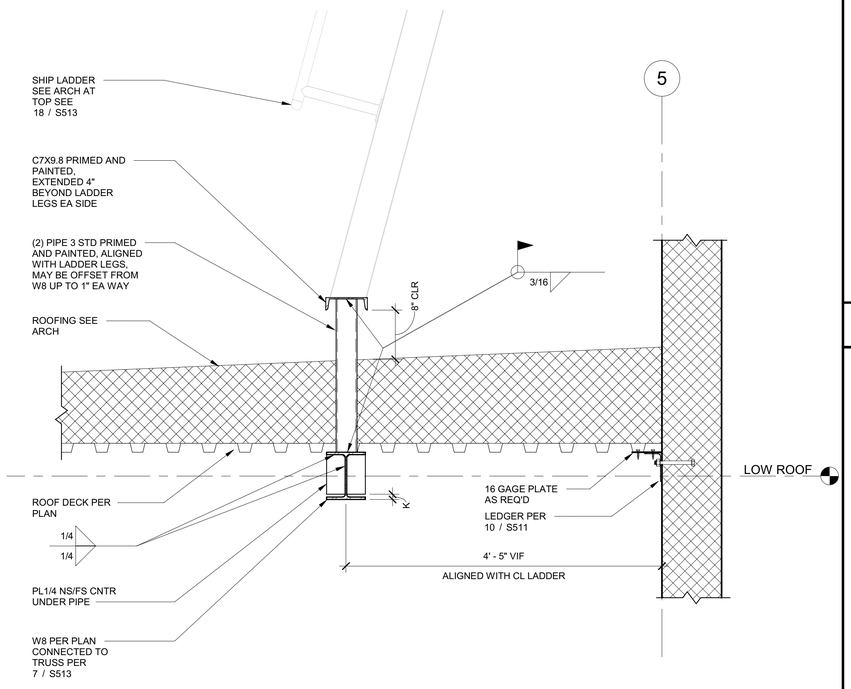

20 SHIP LADDER BASE — 1" = 1'-0"

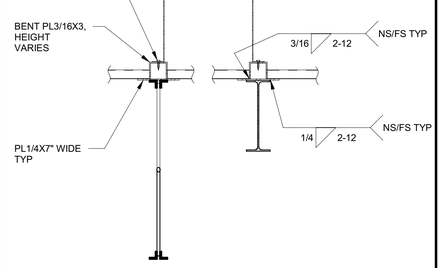

11 AC UNIT AT BEAM — 1" = 1'-0"

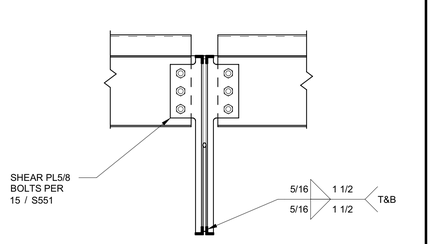

7 AC UNIT AT ROOF — 1" = 1'-0"

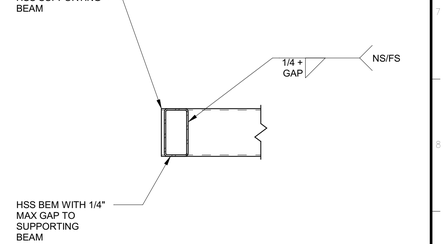

3 ENTRY DETAIL — 1" = 1'-0"

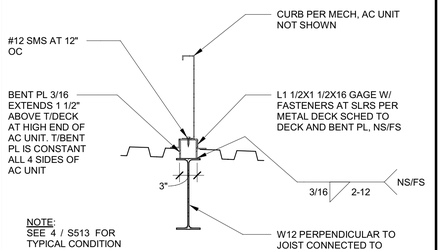

12 AC CURB AT 5.9 — 1" = 1'-0"

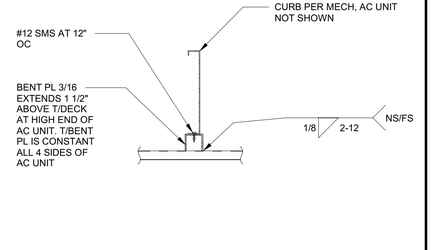

8 AC CURB AT DECK — 1" = 1'-0"

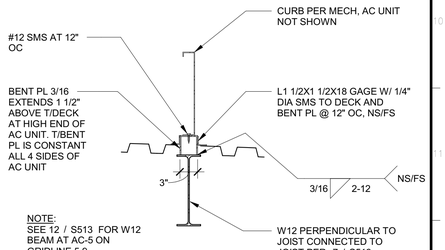

4 AC CURB SUPPORT — 1" = 1'-0"

IDENTIFICATION STAMP
DIV. OF THE STATE ARCHITECT
APP: 03-121324 INC:
REVIEWED FOR
SS ☐ FLS ☐ ACS ☑
DATE: 09/14/2022

OFFICE OF THE STATE FIRE MARSHAL
APPROVED FIRE AND PANIC ONLY
09/07/22
21-0233
Approval of this plan does not authorize or approve any omission or deviation from applicable regulations. Final approval is subject to field inspection. One set of approved plans shall be available on the project site at all times.

GENERAL SERVICES
Department of General Services
Architecture & Engineering Sections
State of California
Real Estate Services Division
Project Management & Development Branch
707 Third Street, Suite 4-105
West Sacramento, California 95605

REGISTERED PROFESSIONAL ENGINEER
MARSHALL ROBERTS
No. S-6173
STRUCTURAL
STATE OF CALIFORNIA
1/21/22

DMV
State of California
Department of Motor Vehicles

Issue

No.	Date	Description
1	9/2/22	

Project
SANTA MARIA FIELD OFFICE REPLACEMENT
2770 SANTA MARIA WAY
SANTA MARIA, CA 93455
SANTA BARBARA COUNTY
MOTOR VEHICLES

Supervisor	Designed	Drawn
J.DIGIORGIO	M.ROBERTS	M.ROBERTS

DSA App No. | SFM Permit No.

Sheet Title
FRAMING DETAILS

Project Number
DGS000000140725

Sheet Scale
Sheet Number
S513

Copyright © 2020, California Department of General Services: Real Estate Services Division

C:\Projects\DGS000000140725_STR_Marshall Roberts.rvt
1/21/2022 2:27:23 PM
24 x 36
RELATIVE BORDER SCALE IN INCHES

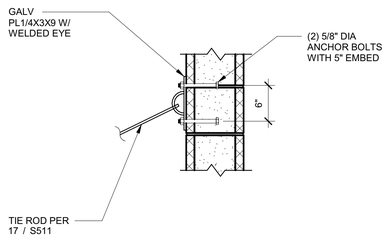

5 TIE ROD AT WALL — 1" = 1'-0"

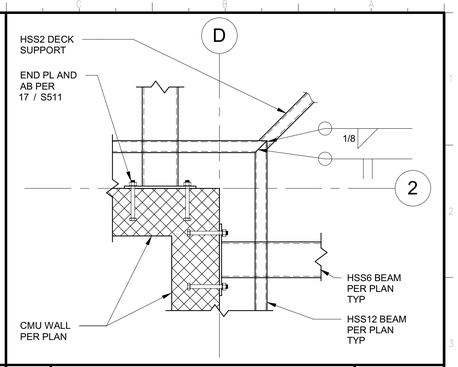

1 EYEBROW CORNER — 1" = 1'-0"

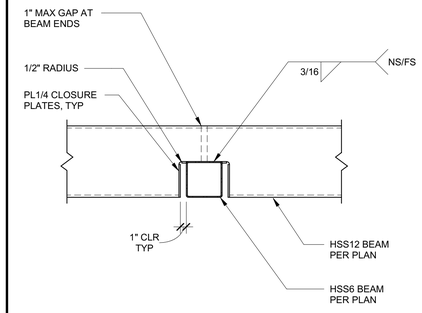

2 EYEBROW BEAM CONN — 1" = 1'-0"

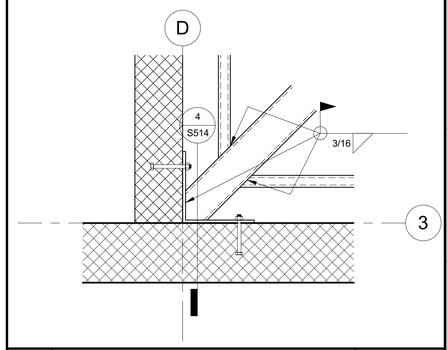

3 EYEBROW CORNER 2 — 1" = 1'-0"

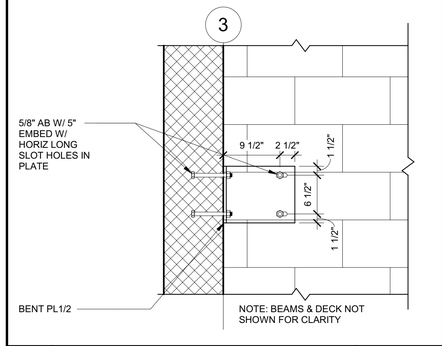

4 CORNER PLATE — 1" = 1'-0"

IDENTIFICATION STAMP
DIV. OF THE STATE ARCHITECT
APP: 03-121324 INC:
REVIEWED FOR
SS ☐ FLS ☐ ACS ☑
DATE: 09/14/2022

OFFICE OF THE STATE FIRE MARSHAL
APPROVED FIRE AND PANIC ONLY
09/07/22
21-0233
Approval of this plan does not authorize or approve any omission or deviation from applicable regulations. Final approval is subject to field inspection. One set of approved plans shall be available on the project site at all times.

GENERAL SERVICES

Department of General Services
Architecture & Engineering Sections
State of California
Real Estate Services Division
Project Management & Development Branch
707 Third Street, Suite 4-105
West Sacramento, California 95605

REGISTERED PROFESSIONAL ENGINEER
MARSHALL ROBERTS
No. S-6173
STRUCTURAL
STATE OF CALIFORNIA
1/21/22

State of California
Department of Motor Vehicles

Issue

No.	Date	Description
1	9/2/22	

Project
SANTA MARIA FIELD OFFICE REPLACEMENT
2770 SANTA MARIA WAY
SANTA MARIA, CA 93455
SANTA BARBARA COUNTY

MOTOR VEHICLES

Supervisor	Designed	Drawn
J.DIGIORGIO	M.ROBERTS	M.ROBERTS

DSA App No. | SFM Permit No.

Sheet Title
ROOF FRAMING DETAILS

Project Number
DGS000000140725

Sheet Scale
Sheet Number
S514

Copyright © 2020, California Department of General Services- Real Estate Services Division

C:\Projects\DGS000000140725_STR_Marshall Roberts.rvt
1/21/2022 2:27:24 PM

RELATIVE BORDER SCALE IN INCHES

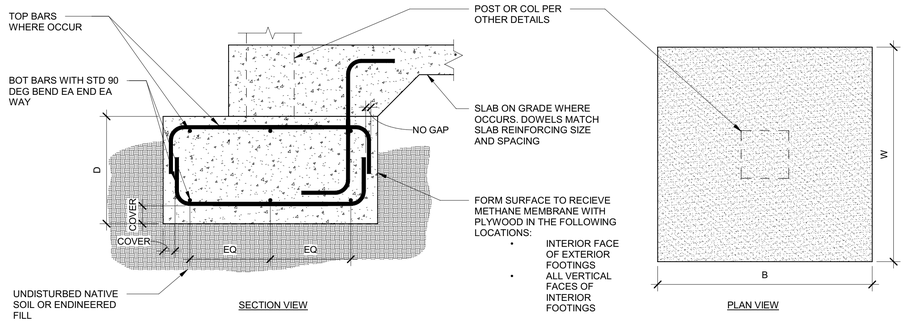

SPREAD FOOTING SCHEDULE

MARK	B	W	D	TOP BARS	BOT BARS
F2	2' - 0"	2' - 0"	1' - 6"	-	2-#5
F3	3' - 0"	3' - 0"	1' - 6"	-	4-#5
F4	4' - 0"	4' - 0"	1' - 6"	-	6-#5
F5	5' - 0"	5' - 0"	1' - 6"	6-#5	6-#5

17 SPREAD FOOTING — NOT TO SCALE

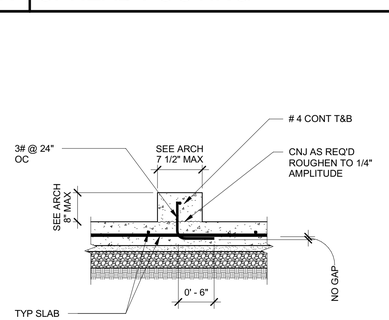

18 CONCRETE CURB — NOT TO SCALE

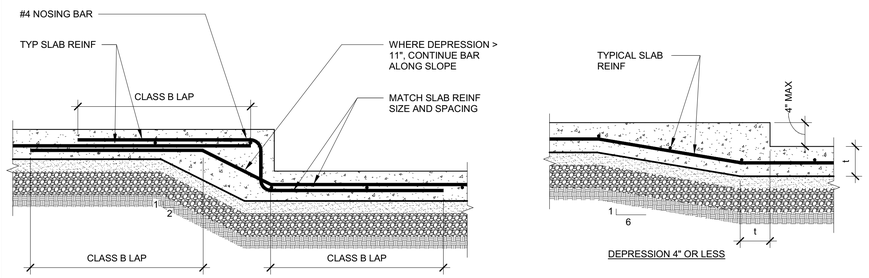

14 STEP IN SLAB ON GRADE — NOT TO SCALE

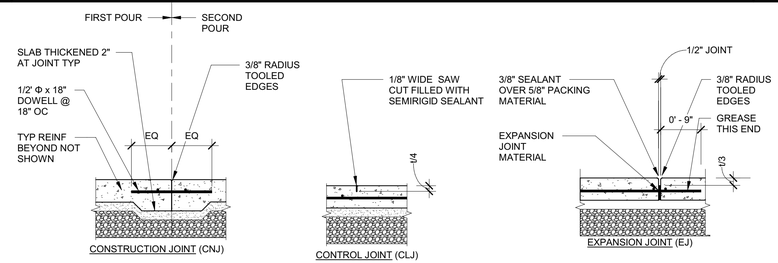

NOTES:
1. CONSTRUCTION JOINTS AND CONTROL JOINTS SHALL DIVIDE SLAB INTO AREAS NOT EXCEEDING 225 SQ FT WITHOUT REENTRANT CORNERS AND WITH LENGTH TO WIDTH RATIOS NOT EXCEEDING 1 TO 1.
2. CONTRACTOR SHALL SUBMIT LAYOUT PLAN SHOWING PROPOSED CONTROL AND CONSTRUCTION JOINT LOCATION.
3. JOINT SPACING SHALL NOT EXCEED 15 FEET IN EITHER DIRECTION. SEMIRIGID SEALANT PER SPECIFICATIONS.
4. CONSTRUCTION JOINTS MAY BE USED IN LIEU OF CONTROL JOINTS AT CONTRACTOR'S OPTION.

15 SLAB ON GRADE JOINTS — NOT TO SCALE

NOTES:
1. PROVIDE STD HOOK (12" MIN) AT ENDS OF ALL INTERIOR REBAR AT ENDS, CORNERS AND INTERSECTIONS - TYPICAL
2. PROVIDE ADDITIONAL VERTICAL BAR(S) AS SHOWN AT ALL CORNERS, INTERSECTIONS, AND ENDS MATCH VERTICAL REINFORCING.
3. SEE CONCRETE NOTES FOR ADDL REQUIREMENTS.
4. BEND BARS EITHER DIRECTION. EQUAL NUMBER OF BARS GOING BOTH DIRECTIONS IF POSSIBLE.
5. WHERE BARS QUANTITIED AND SIZES VARY, USE STD HOOK INTO ADJACENT FOOTING.

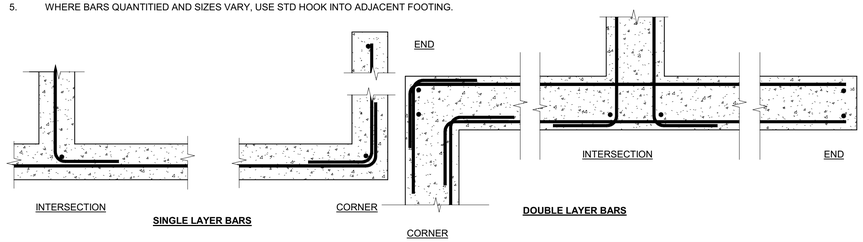

20 CORNER REINFORCING AT CONCRETE WALLS AND FOOTING — NOT TO SCALE

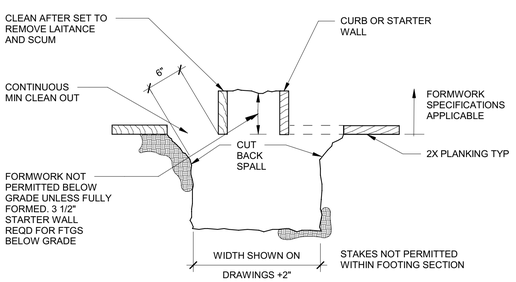

12 MANDATORY MINIMUM FORMWORK — NOT TO SCALE

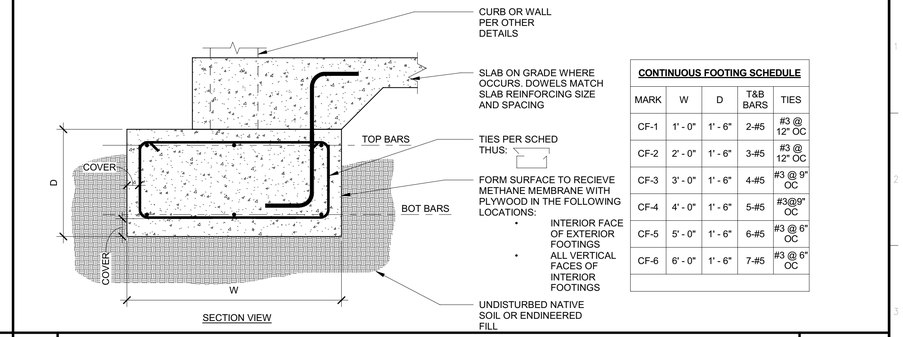

CONTINUOUS FOOTING SCHEDULE

MARK	W	D	T&B BARS	TIES
CF-1	1' - 0"	1' - 6"	2-#5	#3 @ 12" OC
CF-2	2' - 0"	1' - 6"	3-#5	#3 @ 12" OC
CF-3	3' - 0"	1' - 6"	4-#5	#3 @ 9" OC
CF-4	4' - 0"	1' - 6"	5-#5	#3@9" OC
CF-5	5' - 0"	1' - 6"	6-#5	#3 @ 6" OC
CF-6	6' - 0"	1' - 6"	7-#5	#3 @ 6" OC

5 CONTINUOUS FOOTING — NOT TO SCALE

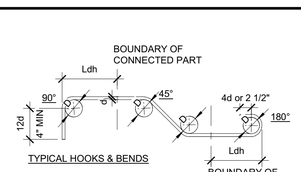

Minimum Bend Diameter
D=6d for #3 thru #8
D=8d for #g thru #11
D=10d for #14 thru #18

NOTES:
1. ALL HOOKS SHALL BE 90 ° STANDARD HOOKS UNLESS OTHERWISE SHOWN OR NOTED.
2. ALL REINF. SHALL BE BENT COLD, U.N.O.

REBAR HOOKED DEVELOPMENT LENGTH, Ldh

BAR SIZE	CONCRETE STRENGTH		
	f'c = 3000 PSI	f'c = 4000 PSI	f'c = 5000 PSI
#3	0'-8"	0'-7"	0'-6"
#4	0'-11"	0'-9"	0'-9"
#5	1'-2"	1'-0"	0'-11"
#6	1'-4"	1'-2"	1'-2"
#7	1'-7"	1'-5"	1'-3"
#8	1'-10"	1'-7"	1'-3"
#9	2'-1"	1'-9"	1'-7"
#10	2'-3"	2'-0"	1'-10"
#11	2'-6"	2'-2"	2'-0"

6 STANDARD REBAR HOOKS AND BENDS — NOT TO SCALE

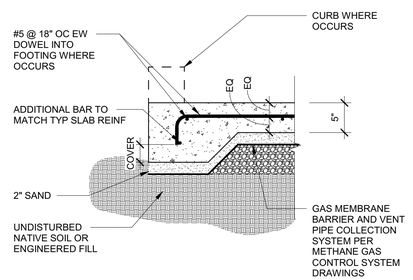

7 SLAB ON GRADE — NOT TO SCALE

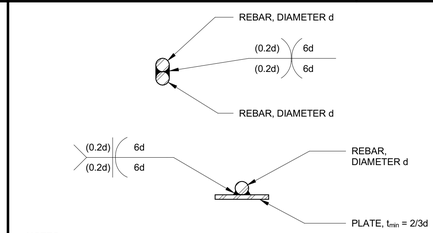

NOTES:
1. REBAR TO BE WELDED SHALL BE ASTM A706 OR ASTM A615 WITH CARBON EQUIVALENT NO GREATER THAN .75% AND CONFORMING TO UBC STANDARD 19-1.
2. ALL PREHEATING AND WELDING SHALL BE DONE IN ACCORDANCE WITH AWS D1.4
3. ALL WELDING SHALL BE CONTINUOUSLY INSPECTED BY A QUALIFIED LABORATORY.
4. THE WELDING OF REINFORCING BARS SHALL CONFORM TO ANSI/AWS D1.4 WELDING CODE

3 REBAR WELDING DETAIL — NOT TO SCALE

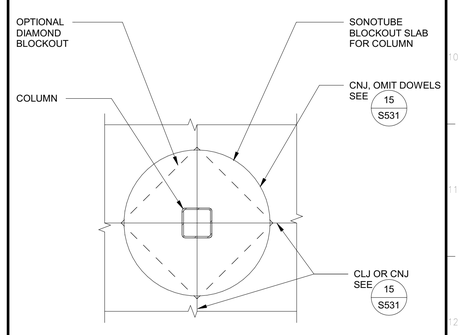

4 SLAB BLOCKOUT — NOT TO SCALE

IDENTIFICATION STAMP
DIV. OF THE STATE ARCHITECT
APP: 03-121324 INC:
REVIEWED FOR
SS ☐ FLS ☐ ACS ☑
DATE: 09/14/2022

OFFICE OF THE STATE FIRE MARSHAL
APPROVED FIRE AND PANIC ONLY
09/07/22
21-0233
Approval of this plan does not authorize or approve any omission or deviation from applicable regulations. Final approval is subject to field inspection. One set of approved plans shall be available on the project site at all times.

DGS GENERAL SERVICES
Department of General Services
Architecture & Engineering Sections
State of California
Real Estate Services Division
Project Management & Development Branch
707 Third Street, Suite 4-105
West Sacramento, California 95605

REGISTERED PROFESSIONAL ENGINEER MARSHALL ROBERTS No. S-G173 STRUCTURAL STATE OF CALIFORNIA
1/21/22

DMV
State of California
Department of Motor Vehicles

Issue

No.	Date	Description
1	9/2/22	

Project
SANTA MARIA FIELD OFFICE REPLACEMENT
2770 SANTA MARIA WAY
SANTA MARIA, CA 93455
SANTA BARBARA COUNTY

MOTOR VEHICLES

Supervisor	Designed	Drawn
J.DIGIORGIO	M.ROBERTS	M.ROBERTS

DSA App No. | SFM Permit No.

Sheet Title
CONCRETE TYPICAL DETAILS

Project Number
DGS000000140725

Sheet Scale
Sheet Number
S531

Copyright © 2020, California Department of General Services - Real Estate Services Division

C:\Projects\DGS000000140725_STR_Marshall.Roberts.rvt
1/21/2022 2:27:27 PM
RELATIVE BORDER SCALE IN INCHES

NOTES:
1. DO NOT CUT REINFORCING WHEN PENETRATION IS IN THE MIDDLE THIRD OFTHE FTG
2. PROVIDE 2" MIN CLR BETWEEN SLEEVE AND ALL REINF
3. FOR INFORMATION REGARDING SLEEVE TO PIPE/CONDUIT CLEARANCE, SEE 5 / S532
4. CAULK SEAL GAP AT SLEEVE TO PIPE/CONDUIT INTERFACE ON EXTERIOR SIDE OF FOOTING.
5. IF PIPE OR CONDUIT PENETRATION OCCURS AT EITHER TOP OR BOTTOM REBAR SPLICE LOCATION, PROVIDE 2 ADDITIONAL SHEAR STIRRUPS ON EA SIDE OF PENETRATION.
6. IF SLEEVE IS ASTM A53 SCHEDULE 40 OR GREATER PIPE, ADDITIONAL STIRRUPS MAY BE ELIMINATED. SLEEVE SHALL BE GALVANIZED.

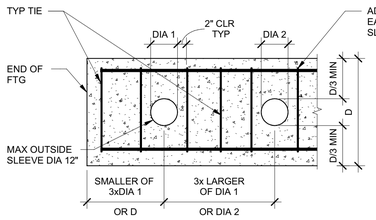

PIPE OR CONDUIT IN MIDDLE THIRD

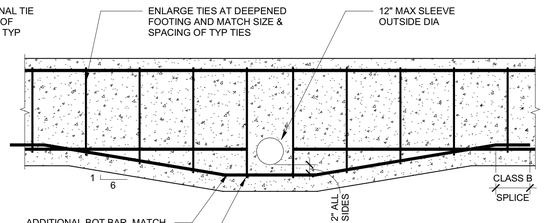

PIPE OR CONDUIT BELOW MIDDLE THIRD

17 MEP PENETRATIONS IN CONTINUOUS FOOTINGS

NOT TO SCALE

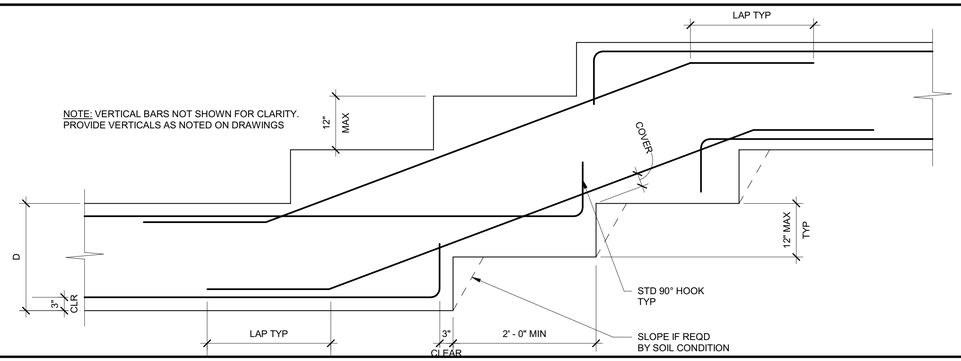

18 STEP IN CONTINUOUS FOOTING

NOT TO SCALE

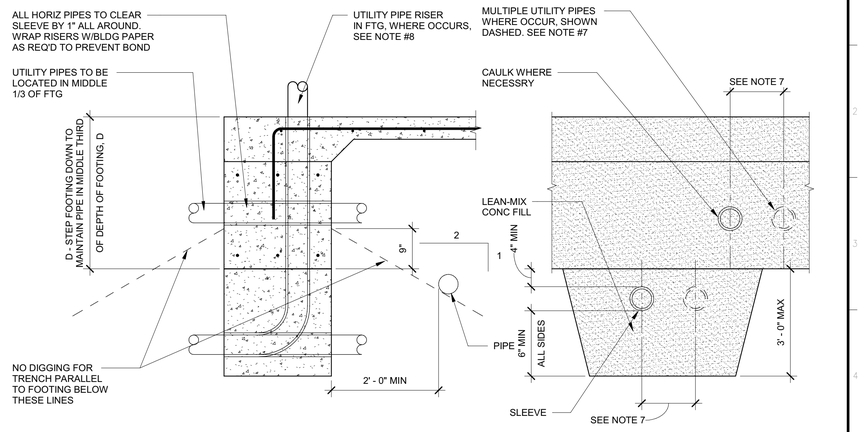

NOTES:
1. REINFORCING SHALL NOT BE INTERRUPTED, CUT OR DISPLACED BY PLACEMENT OF UTILITY PIPE.
2. 1500 PSI LEAN MIX CONCRETE FILL TO BE PLACED BEFORE FTG IS CAST. MAKE SAME WIDTH AS FTG AND FULL WIDTH OF PIPE TRENCH.
3. STEP FTG IF PIPE OCCURS IN LOWER THIRD OF ORIGINAL FOOTING DEPTH.
4. NO PIPES SHALL BE PLACED BELOW SPREAD FTGS OR WITHIN 2 TO 1 BEARING ZONE AROUND SPREAD FOOTING.
5. IF PIPE IS IN PLACE PRIOR TO CASTING CONCRETE, WRAP PIPE W/1" STYROFOAM INSULATION IN LIEU OF SLEEVE.
6. UTILITY PIPES ARE NOT ALLOWED PARALLEL IN FOOTING.
7. MULITPLE UTILITY PIPES (TWO OR MORE) MAY BE INSTALLED AS SHOWN, PROVIDED THEY ARE SPACED A MINIMUM 4 PIPES/CONDUIT DIAMETERS ON CENTER WITH A MINIMUM OF 3" OF CONCRETE BETWEEN.
8. UTILITY PIPES RISERS MAY OCCUR IN CONTINUOUS WALL FOOTINGS PROVIDED THEY ARE NO LARGER THAN (FOOTING WIDTH/6) AND OCCUR W/IN THE MIDDLE 1/2 OF THE FOOTING WIDTH. MULTIPLE RISERS MAY OCCUR IF SPACED AS NOTED ABOVE.
9. UTILITY PIPES PERPENDICULAR TO FOOTINGS AND MORE THAN 2'-0" BELOW BOTTOM OF FOOTINGS DOES NOT REQUIRE LEAN-MIX CONCRETE ENCASEMENT SUBJECT TO ACCEPTANCE OF THE SOILS ENGINEER.
10. CONDITIONS NOT CONFORMING TO THE PARAMETERS NOTED ABOVE SHALL BE REVIEWED ON A CASE-BY-CASE BASIS.

5 CONCRETE FOOTING AT UTILITY PIPES

NOT TO SCALE

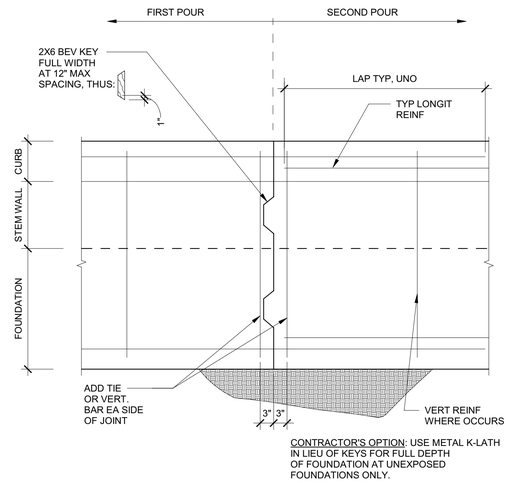

CONTRACTOR'S OPTION: USE METAL K-LATH IN LIEU OF KEYS FOR FULL DEPTH OF FOUNDATION AT UNEXPOSED FOUNDATIONS ONLY.

8 FOUNDATION CONSTRUCTION JOINT

NOT TO SCALE

IDENTIFICATION STAMP
DIV. OF THE STATE ARCHITECT
APP: 03-121324 INC: A
REVIEWED FOR
SS ☐ FLS ☐ ACS ☑
DATE: 09/14/2022

OFFICE OF THE STATE FIRE MARSHAL
APPROVED FIRE AND PANIC ONLY
09/07/22
21-0233
Approval of this plan does not authorize or approve any omission or deviation from applicable regulations. Final approval is subject to field inspection. One set of approved plans shall be available on the project site at all times.

DGS GENERAL SERVICES
Department of General Services
Architecture & Engineering Sections
State of California
Real Estate Services Division
Project Management & Development Branch
707 Third Street, Suite 4-105
West Sacramento, California 95605

REGISTERED PROFESSIONAL ENGINEER
MARSHALL ROBERTS
No. S-G173
STRUCTURAL
STATE OF CALIFORNIA
1/21/22

DMV
State of California
Department of Motor Vehicles

Issue

No.	Date	Description
1	9/2/22	

Project
SANTA MARIA FIELD OFFICE REPLACEMENT
2770 SANTA MARIA WAY
SANTA MARIA, CA 93455
SANTA BARBARA COUNTY

MOTOR VEHICLES

Supervisor	Designed	Drawn
J.DIGIORGIO	M.ROBERTS	M.ROBERTS

DSA App No. | SFM Permit No.

Sheet Title
CONCRETE TYPICAL DETAILS

Project Number
DGS000000140725

Sheet Scale
Sheet Number
S532

Copyright © 2020, California Department of General Services - Real Estate Services Division

C:\Projects\DGS000000140725_STR_Marshall.Roberts.rvt
1/21/2022 2:27:28 PM

RELATIVE BORDER SCALE IN INCHES

18 GENERIC CMU WALL ELEVATION — NOT TO SCALE

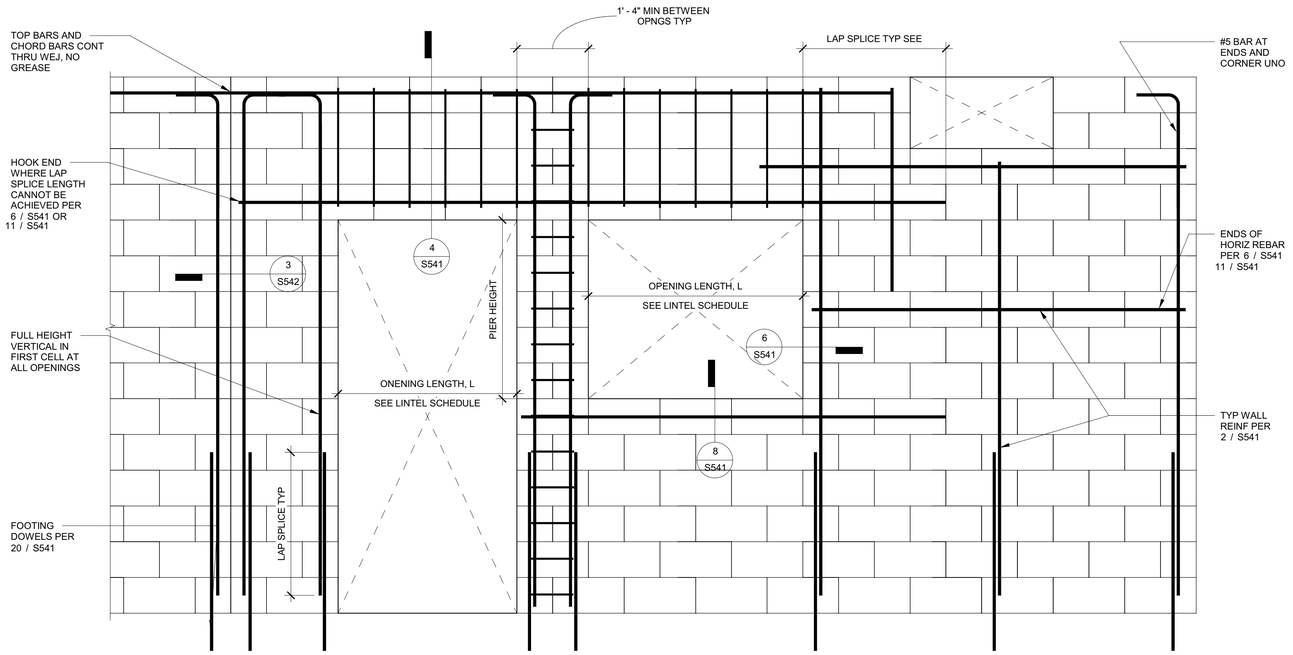

19 CMU WALL PIER — NOT TO SCALE

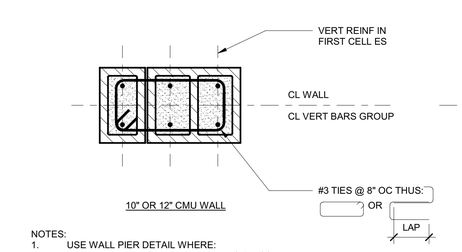

NOTES:
1. USE WALL PIER DETAIL WHERE:
   A. PIER LENGTH < 5x WALL THICKNESS, T
   B. PEIR HEIGHT > 2x PIER LENGTH
2. EXTEND HORIZ TIES LAP SPLICE ABV AND BLW OPNG

20 CF AT CMU WALL — NOT TO SCALE

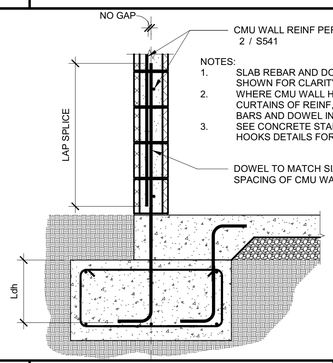

NOTES:
1. SLAB REBAR AND DOWELS NOT SHOWN FOR CLARITY.
2. WHERE CMU WALL HAS 2 CURTAINS OF REINF, LAP ALL VERT BARS AND DOWEL INTO FOOTING.
3. SEE CONCRETE STANDARD REBAR HOOKS DETAILS FOR MORE INFO

11 WALL INTERSECTIONS — NOT TO SCALE

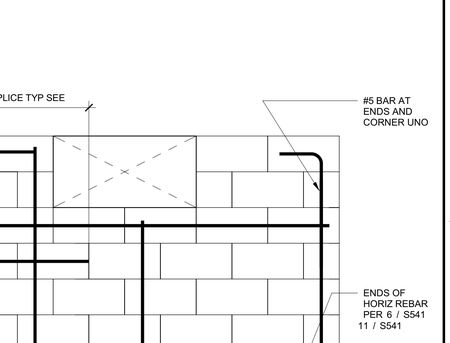

6 WALL ENDS — NOT TO SCALE

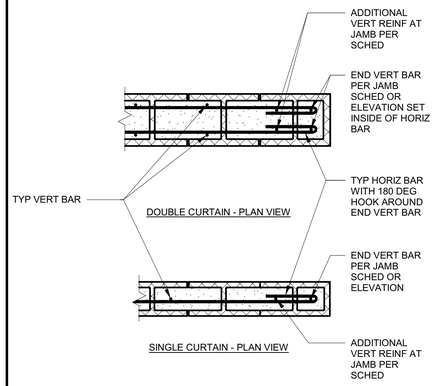

NOTES:
1. SEE FRAMING ELEVATION FOR SPECIAL CONDITIONS

CMU JAMB REINFORCING SCHEDULE

MAX OPENING LENGTH	6"-8" WALL		10"-12" WALL	
	16 FT MAX HEIGH	24 FT MAX HEIGHT	16 FT MAX HEIGHT	24 FT MAX HEIGHT
6'-0"	(2) #5	NA	NA	(4) #6
10' - 0"	(2) #6	NA	NA	(4) #7

8 SILLS — NOT TO SCALE

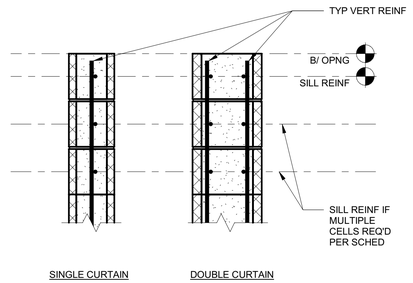

CMU SILL REINFORCING SCHEDULE

MAX OPENING LENGTH	6"-8" WALL		10"-12" WALL	
	HORIZ	# CELLS	HORIZ	# CELLS
4'-0"	(1) #4	1	NA	NA
6'-0"	NA	NA	(2) #5	1
8'-0"	(1) #5	1	NA	NA

2 WALL REINFORCING — NOT TO SCALE

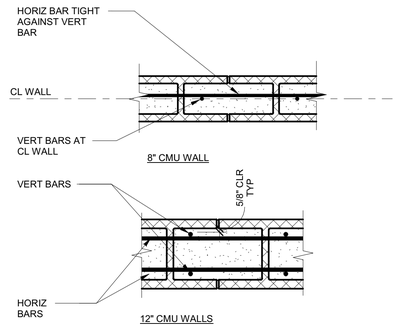

CMU WALL SCHEDULE

MARK	NOMINAL BLOCK THICKNESS	VERT BARS	HORIZ BARS
CMU8	8"	#5 @ 16" OC	#4 @ 24" OC
CMU10a	10"	#5 @ 16" OC	#5 @ 16" OC
CMU10b	10"	#6 @16" OC	#5 @ 16" OC

NOTES:
1. FOOTING DOWELS REQUIRED TO MATCH ALL VERTICAL REINFORCING.
2. REINFORCING SHOWN IS TYPICAL U.N.O ON PLAN OR IN SECTION.
3. ALL CELLS ARE GROUTED SOLID.

4 LINTELS — NOT TO SCALE

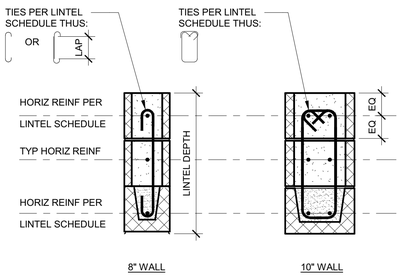

CMU LINTEL REINFORCING SCHEDULE

MAX OPENING LENGTH	MIN LINTEL DEPTH	6"-8" WALL		10"-12" WALL	
		HORIZ	TIES	HORIZ	TIES
6'-8"	2'-8"	#5	#3 @ 12" OC	2-#5	#3 @ 12" OC
10'-0"	2'-8"	#6	#3 @ 8" OC	2-#7	#3 @ 8" OC

IDENTIFICATION STAMP
DIV. OF THE STATE ARCHITECT
APP: 03-121324 INC:
REVIEWED FOR
SS ☐ FLS ☐ ACS ☑
DATE: 09/14/2022

OFFICE OF THE STATE FIRE MARSHAL
APPROVED FIRE AND PANIC ONLY
09/07/22
21-0233
Approval of this plan does not authorize or approve any omission or deviation from applicable regulations. Final approval is subject to field inspection. One set of approved plans shall be available on the project site at all times.

GENERAL SERVICES
Department of General Services
Architecture & Engineering Sections
State of California
Real Estate Services Division
Project Management & Development Branch
707 Third Street, Suite 4-105
West Sacramento, California 95605

REGISTERED PROFESSIONAL ENGINEER
MARSHALL ROBERTS
No. S-6173
STRUCTURAL
STATE OF CALIFORNIA
1/21/22

DMV
State of California
Department of Motor Vehicles

Issue		
No.	Date	Description
1	9/2/22	

Project
SANTA MARIA FIELD OFFICE REPLACEMENT

2770 SANTA MARIA WAY
SANTA MARIA, CA 93455
SANTA BARBARA COUNTY

MOTOR VEHICLES

Supervisor	Designed	Drawn
J.DIGIORGIO	M.ROBERTS	M.ROBERTS

DSA App No. | SFM Permit No.

Sheet Title
CMU TYPICAL DETAILS

Project Number
DGS000000140725

Sheet Scale
Sheet Number
S541

Copyright © 2020, California Department of General Services: Real Estate Services Division

C:\Projects\DGS000000140725_STR_Marshall Roberts.rvt
1/21/2022 2:27:31 PM

RELATIVE BORDER SCALE IN INCHES

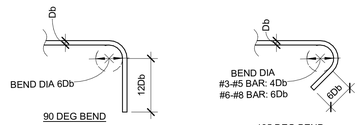

90 DEG BEND

135 DEG BEND

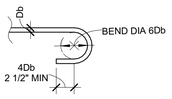

180 DEG BEND

1 REBAR HOOKS AND TIES — NOT TO SCALE

CMU ANCHOR BOLTS	
DIAMETER	MIN EMBED
1/2"	4"
5/8	5"
3/4"	5"
7/8"	6"
1"	7"
1 1/8"	8"

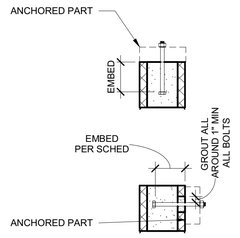

NOTES:
1. MIN BOLT SPACING IS 8 BOLT DIAMETERS
2. MIN EDGE DISTANCE IS 6 BOLT DIAMETERS AND 6" TO END OF WALL
3. BOLTS ARE ASTM A307 HEADED HEX BOLTS OR A36 PLAIN ROD WITH THREADED ENDS AND DOUBLE HEX NUTS
4. ALL ANCHOR BOLTS IN MASONRY TO BE HEADED, NO 'J' BOLTS

2 ANCHOR BOLT — NOT TO SCALE

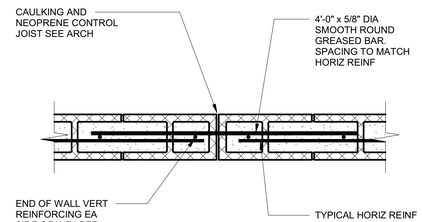

NOTE:
1. DO NOT SPLICE CHORD BARS WITHIN 4'-0" OF EXPANSION JOINT.
2. DO NOT PLACE WEJ WITHIN 2'-0" OF ANY DOOR OR WINDOW OPENINGS.
3. EXPANSION JOINT SPACING WALL HEIGHT x 1.5 OR 25'-0 OC MAX. NO JOINT REQD AT WALLS LESS THAN 25'-0" IN LENGTH. SEE PLAN FOR LOCATION (WEJ)
4. CHORD BARS AND TOP BARS CONTINUOUS THRU JOINT TYP UNO

3 WALL EXPANSION JOINT — NOT TO SCALE

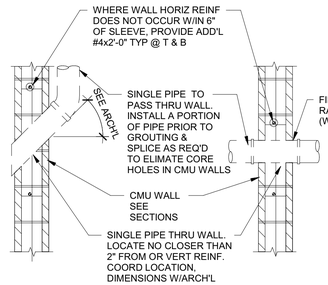

NOTE: PIPE PENETRATIONS NOT ALLOWED IN CELLS THAT CONTAIN VERTICAL REINFORCING STEEL.

4 PIPE PENETRATION — NOT TO SCALE

IDENTIFICATION STAMP
DIV. OF THE STATE ARCHITECT
APP: 03-121324 INC:
REVIEWED FOR
SS ☐ FLS ☐ ACS ☑
DATE: 09/14/2022

OFFICE OF THE STATE FIRE MARSHAL
APPROVED FIRE AND PANIC ONLY
09/07/22
21-0233
Approval of this plan does not authorize or approve any omission or deviation from applicable regulations. Final approval is subject to field inspection. One set of approved plans shall be available on the project site at all times.

GENERAL SERVICES

Department of General Services
Architecture & Engineering Sections
State of California
Real Estate Services Division
Project Management & Development Branch
707 Third Street, Suite 4-105
West Sacramento, California 95605

REGISTERED PROFESSIONAL ENGINEER
MARSHALL ROBERTS
No. S-6173
STRUCTURAL
STATE OF CALIFORNIA
1/21/22

DMV
State of California
Department of Motor Vehicles

Issue

No.	Date	Description
1	9/2/22	

Project
SANTA MARIA FIELD OFFICE REPLACEMENT
2770 SANTA MARIA WAY
SANTA MARIA, CA 93455
SANTA BARBARA COUNTY

MOTOR VEHICLES

Supervisor	Designed	Drawn
J.DIGIORGIO	M.ROBERTS	M.ROBERTS

DSA App No. | SFM Permit No.

Sheet Title
CMU TYPICAL DETAILS

Project Number
DGS000000140725

Sheet Scale
Sheet Number
S542

Copyright © 2020, California Department of General Services - Real Estate Services Division

1/21/2022 2:27:31 PM C:\Projects\DGS000000140725_STR_Marshall.Roberts.rvt

RELATIVE BORDER SCALE IN INCHES 0 1 2 3

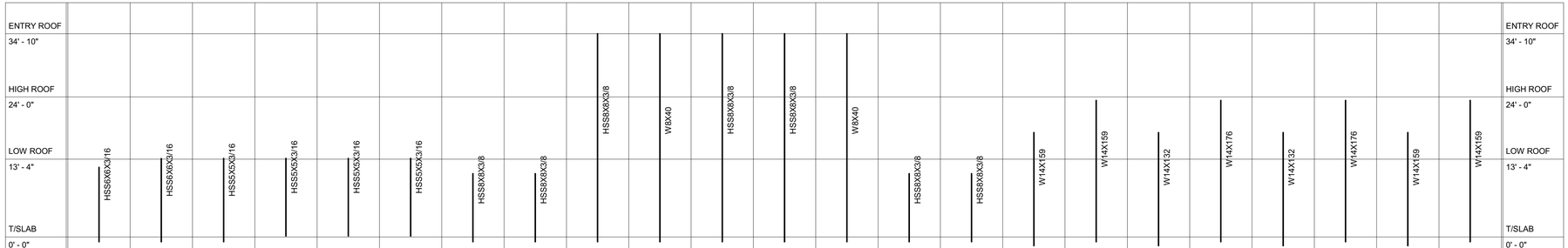

Column Locations	A.9(0' - 5")-4(20' - 8 3/4")	A.9(0' - 5")-5(0' - 5")	C(-6' - 0")-5.9	C.2-5.9	C.4-5.9	D.1(-2' - 0")-5.9	D.1(0' - 9")-8(3' - 1")	D.1(12' - 0 3/8")-8(3' - 1")	D.4-2.2	D.4-3.1	D.6-1	D.8-2.2	D.8-3.1	D.9(-9' - 5")-8(3' - 1")	D.9(-20' - 8 3/8")-8(3' - 1")	R.1-R.A	R.1-R.B	R.2-R.A	R.2-R.B	R.3-R.A	R.3-R.B	R.4-R.A	R.4-R.B
BASE PLATE INFORMATION																							
t x B x N	1/2"X13"X13"	1/2"X13"X13"	1/2"X12"X12"	1/2"X12"X12"	1/2X121/2"X12"	1/2"X12"X12"	1"X15"X15"	1"X15"X15"	1/2"X15"X15"	1/2"X15"X15" (3)	1/2"X15"X15"	1/2"X15"X15"	1/2"X15"X15" (3)	1"X15"X15"	1"X15"X15"	1"X18"X18" (SMRF)	1"X18"X18" (SMRF)	1"X18"X18" (SMRF)	1"X18"X18" (SMRF)	1"X18"X18" (SMRF)	1"X18"X18" (SMRF)	1"X18"X18" (SMRF)	1"X18"X18" (SMRF)
ANCHOR BOLT DIA X EMBED	7/8" DIA X 9"	7/8" DIA X 9"	7/8" DIA X 9"	7/8" DIA X 9"	7/8" DIA X 9"	7/8" DIA X 9"	7/8" DIA X 9"	7/8" DIA X 9"	7/8" DIA X 9"	7/8" DIA X 9"	7/8" DIA X 9"	7/8" DIA X 9"	7/8" DIA X 9"	7/8" DIA X 9"	7/8" DIA X 9"	1 1/8" DIA X 12"	1 1/8" DIA X 12"	1 1/8" DIA X 12"	1 1/8" DIA X 12"	1 1/8" DIA X 12"	1 1/8" DIA X 12"	1 1/8" DIA X 12"	1 1/8" DIA X 12"

NOTES:
1. FOR BASE PLATES, SEE 19 / S552
2. FOR ANCHOR BOLTS, SEE 7 / S551
3. NO DCW WELDING REQUIRED AT W8 COLUMNS ON GRIDLINE 3.1

18 STEEL COLUMN SCHEDULE

3/32" = 1'-0"

SKEWED BEAM SCHEDULE			
B MAX	WELD SIZE S1		H
	SHEAR PL3/8	SHEAR PL1/2	
2 1/8	S + 1/16	S + 1/16	3"
3 1/4	S + 1/8	S + 1/8	3"
9	NOT PERMITTED	CJP	3"
10	NOT PERMITTED	CJP	3 1/8"
11	NOT PERMITTED	CJP	3 1/4"
12	NOT PERMITTED	CJP	3 3/8"

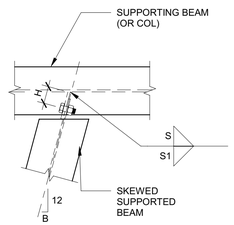

NOTES:
1. SEE 15 / S551 OR 16 / S551 FOR SHEAR TAB

20 SKEWED BEAMS

NOT TO SCALE

BEAM CONNECTION SCHEDULE			
NOMINAL DEPTH OF SUPPORTED BEAM	N	SHEAR PL (in)	WELD SIZE, S (in)
9", 10"	2	3/8	1/4
12", 14"	3	3/8	1/4
16", 18"	4	3/8	1/4
21"	5	3/8	1/4
24"	6	3/8"	1/4
27"	7	1/2"	5/16
30"	8	1/2"	5/16
33" AND UP	9	1/2"	5/16

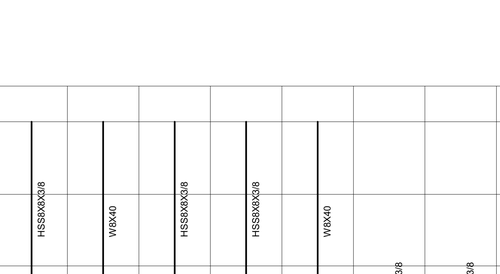

NOTES:
1. BOLTS ARE 7/8" DIA A325N UNO.
2. SEE OTHER DETAILS FOR CONNECTION OF SHEAR PL TO SUPPORTING MEMBER.
3. K IS PER STEEL MANUAL.
4. HORIZONTALLY SLOTTED LSL BOLT HOLES IN SHEAR PL, STD BOLT HOLES IN BEAM WEB.

15 BEAM CONNECTION SCHEDULE

NOT TO SCALE

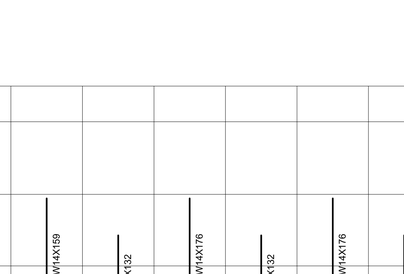

ANCHOR ROD SCHEDULE						
DIAMETER	BASE PL HOLE DIA	MIN WASHER b	MIN WASHER t	MIN PROJ ABV BASE PL	NOMINAL GROUT THICKNESS	WELD A
7/8"	1 13/16"	3"	3/8"	3 1/2"	2"	1/4"
1 1/8"	1 15/16"	3"	1/2"	4"	2"	5/16"

7 ANCHOR ROD DETAIL

NOT TO SCALE

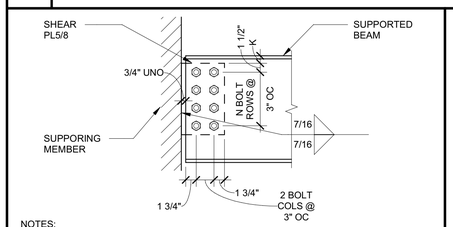

NOTES:
1. THIS DETAIL IS USED AT ALL CONNECTIONS ALONG GRIDLINES DENOTED "SLRS" ON PLAN.
2. BOLTS ARE 7/8" DIA A325SC UNO.
3. SEE OTHER DETAILS FOR CONNECTION OF SHEAR PL TO SUPPORTING MEMBER.
4. K IS PER STEEL MANUAL.
5. HORIZONTALLY SLOTTED LSL BOLT HOLES IN SHEAR PL, STD BOLT HOLES IN BEAM WEB.
6. THIS DETAIL IS USED AT ALL STEEL CONNECTIONS ON GRIDLINES DENOTED "SLRS".
7. SEE 15 / S551 FOR SCHEDULE WITH SHEAR PL THICKNESS AND WELD "S" AS NOTED HERE.

16 SCHEDULE AT SLRS

NOT TO SCALE

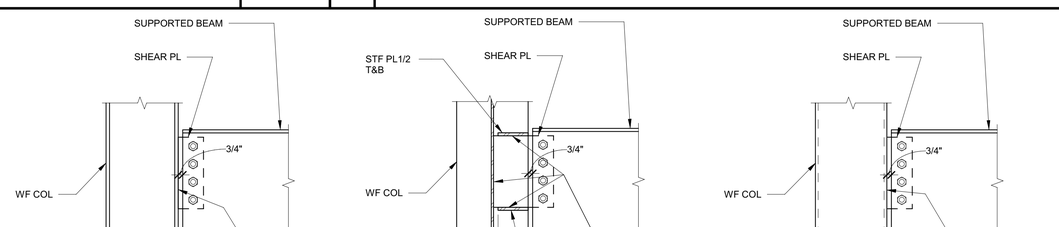

NOTES:
1. SEE 15 / S551 & 16 / S551 FOR INFORMATION NOT SHOWN OR NOTED

12 WF BEAM TO COL

NOT TO SCALE

IDENTIFICATION STAMP
DIV. OF THE STATE ARCHITECT
APP: 03-121324 INC:
REVIEWED FOR
SS ☐ FLS ☐ ACS ☑
DATE: 09/14/2022

OFFICE OF THE STATE FIRE MARSHAL
APPROVED FIRE AND PANIC ONLY
09/07/22
21-0233
Approval of this plan does not authorize or approve any omission or deviation from applicable regulations. Final approval is subject to field inspection. One set of approved plans shall be available on the project site at all times.

GENERAL SERVICES
Department of General Services
Architecture & Engineering Sections
State of California
Real Estate Services Division
Project Management & Development Branch
707 Third Street, Suite 4-105
West Sacramento, California 95605

REGISTERED PROFESSIONAL ENGINEER
MARSHALL ROBERTS
No. S-6173
STRUCTURAL
STATE OF CALIFORNIA
1/21/22

DMV
State of California
Department of Motor Vehicles

Issue		
No.	Date	Description
1	9/2/22	

Project
SANTA MARIA FIELD OFFICE REPLACEMENT
2770 SANTA MARIA WAY
SANTA MARIA, CA 93455
SANTA BARBARA COUNTY

MOTOR VEHICLES

Supervisor	Designed	Drawn
J.DIGIORGIO	M.ROBERTS	M.ROBERTS

DSA App No. | SFM Permit No.

Sheet Title
COLUMN SCHEDULE AND TYPICAL STEEL DETAILS

Project Number
DGS000000140725

Sheet Scale
Sheet Number
S551

Copyright © 2020, California Department of General Services: Real Estate Services Division

C:\Projects\DGS000000140725_STR_Marshall.Roberts.rvt
1/21/2022 2:27:34 PM

RELATIVE BORDER SCALE IN INCHES

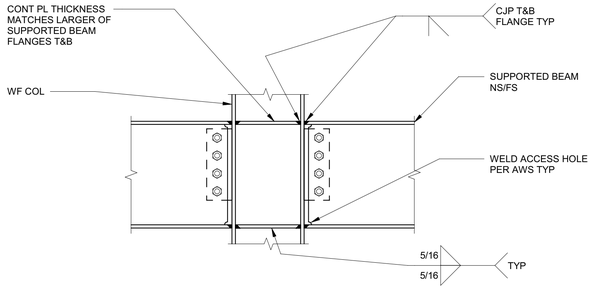

WF COL FLANGE

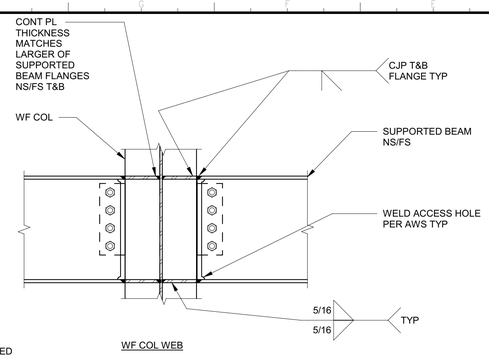

WF COL WEB

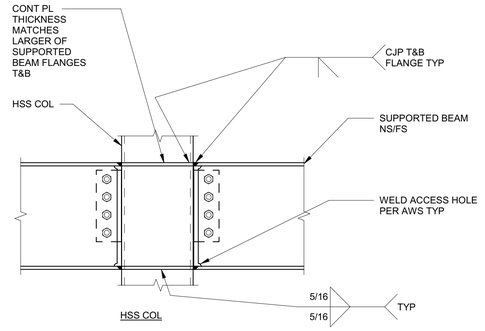

HSS COL

NOTES:
1. SEE 12 / S551 FOR INFORMATION NOT SHOWN OR NOTED

13 WF BEAM TO COL WITH GRAVITY MOMENT CONNECTION

NOT TO SCALE

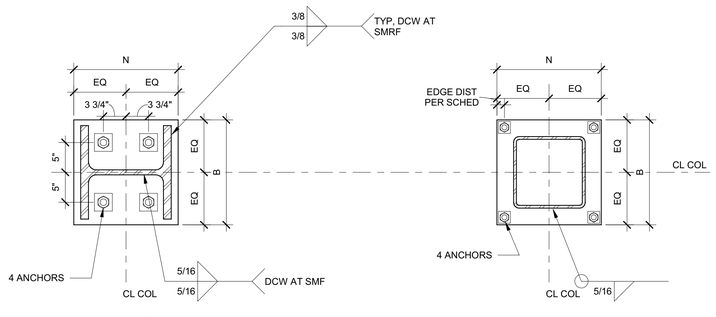

NOTES:
1. SEE COLUMN SCHEDULE FOR BASE PLATE DIMENSIONS 18 / S551
2. SEE COLUMN SCHEDULE FOR ANCHOR ROD DIAMETER AND EMBEDMENT.
3. FOR WELD WASHER SEE 7 / S551

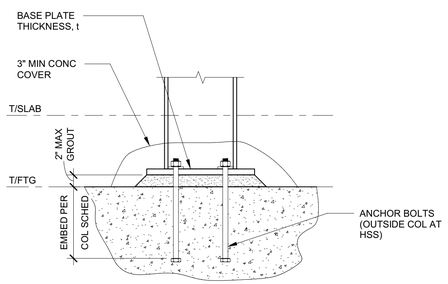

ANCHOR ROD EDGE DISTANCE	
DIAMETER	EDGE DISTANCE
7/8"	2"
1 1/8"	2 1/2"

19 COLUMN BASE DETAIL

NOT TO SCALE

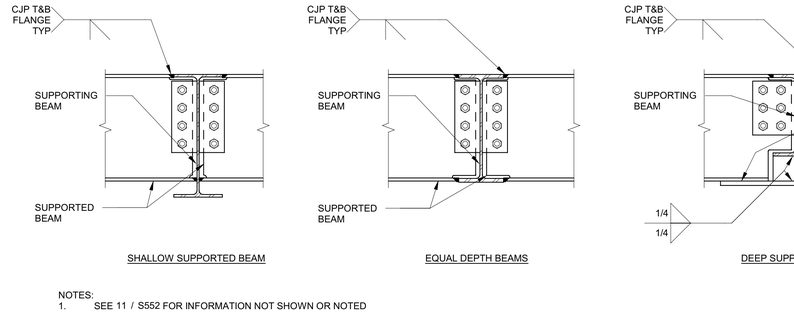

NOTES:
1. SEE 11 / S552 FOR INFORMATION NOT SHOWN OR NOTED

10 BEAM TO BEAM MOMENT CONNECTION

NOT TO SCALE

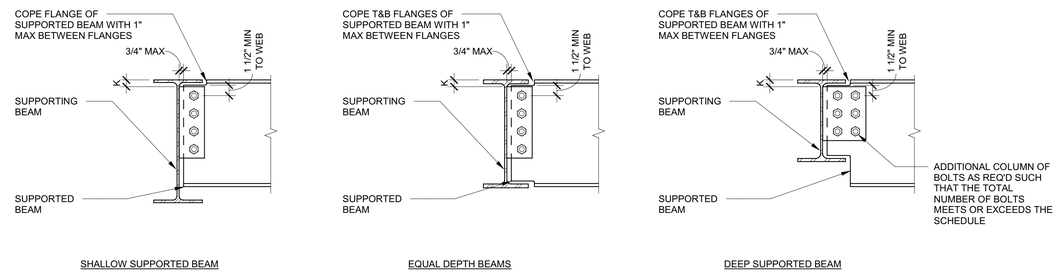

NOTES:
1. SEE 15 / S551 & 16 / S551 FOR INFORMATION NOT SHOWN OR NOTED

11 BEAM TO BEAM SHEAR CONNECTION

NOT TO SCALE

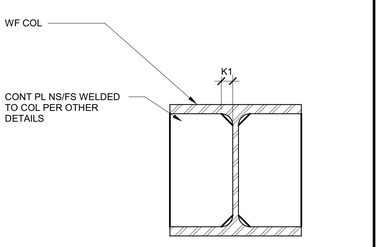

20 CONT PLATE AT WF COL

NOT TO SCALE

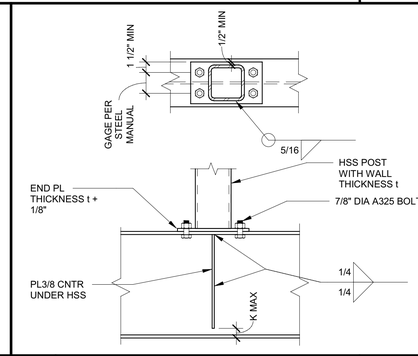

16 HSS POST TO WF BEAM

NOT TO SCALE

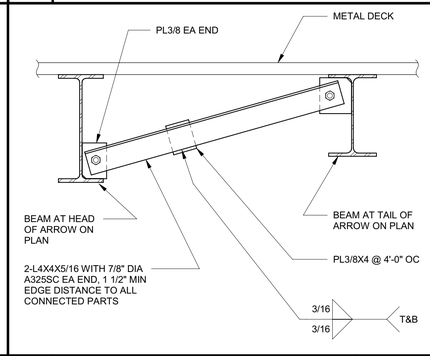

12 BEAM FLANGE BRACE

NOT TO SCALE

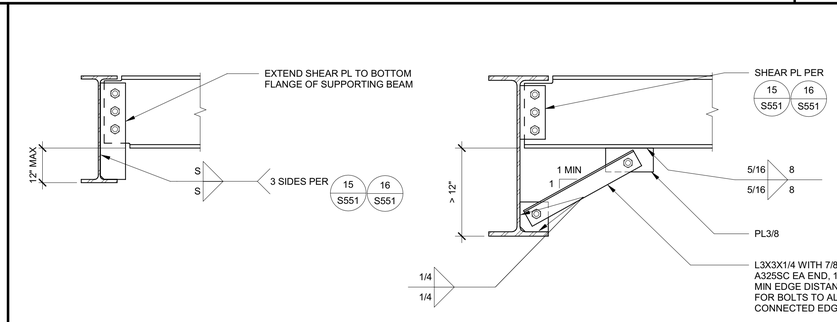

8 FULL DEPTH SHEAR TAB

NOT TO SCALE

IDENTIFICATION STAMP
DIV. OF THE STATE ARCHITECT
APP: 03-121324 INC:
REVIEWED FOR
SS ☐ FLS ☐ ACS ☑
DATE: 09/14/2022

OFFICE OF THE STATE FIRE MARSHAL
APPROVED FIRE AND PANIC ONLY
09/07/22
21-0233
Approval of this plan does not authorize or approve any omission or deviation from applicable regulations. Final approval is subject to field inspection. One set of approved plans shall be available on the project site at all times.

DGS GENERAL SERVICES
Department of General Services
Architecture & Engineering Sections
State of California
Real Estate Services Division
Project Management & Development Branch
707 Third Street, Suite 4-105
West Sacramento, California 95605

REGISTERED PROFESSIONAL ENGINEER
MARSHALL ROBERTS
No. S-6173
STRUCTURAL
STATE OF CALIFORNIA
1/21/22

DMV
State of California
Department of Motor Vehicles

Issue

No.	Date	Description
1	9/2/22	

Project
SANTA MARIA FIELD OFFICE REPLACEMENT
2770 SANTA MARIA WAY
SANTA MARIA, CA 93455
SANTA BARBARA COUNTY

MOTOR VEHICLES

Supervisor	Designed	Drawn
J.DIGIORGIO	M.ROBERTS	M.ROBERTS

DSA App No. | SFM Permit No.

Sheet Title
TYPICAL STEEL DETAILS

Project Number
DGS000000140725

Sheet Scale
Sheet Number
S552

Copyright © 2020, California Department of General Services: Real Estate Services Division

C:\Projects\DGS000000140725_STR_Marshall Roberts.rvt
1/21/2022 2:27:37 PM

RELATIVE BORDER SCALE IN INCHES

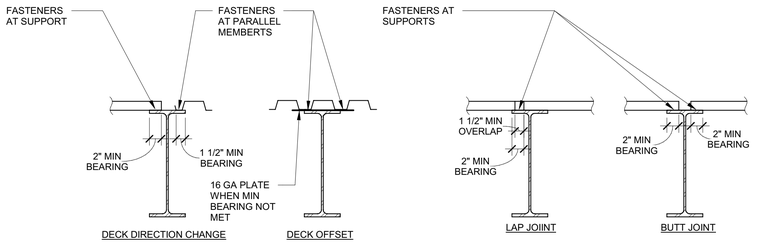

9 TYPICAL DECK JOINT OVER SUPPORT — NOT TO SCALE

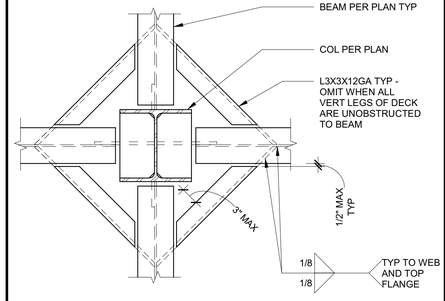

1 INTERIOR COLUMN — NOT TO SCALE

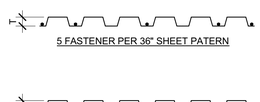

5 FASTENER PER 36" SHEET PATERN

11 FASTENER PER 36" SHEET PATERN

STEEL DECK SCHEDULE

DECK TYPE	DECK SECTION & GAUGE	T	STEEL DECK ONLY (NO FILL)			FASTENERS			
			I (in4)	+S (in3)	-S(in3)	FASTENERS AT SUPPORT MEMBERS	FASTENERS AT PARALLEL MEMBERS	FASTENERS AT SIDE LAPS	FASTENERS AT SLRS
D1	VERCO PLB 18 GAGE	1 1/2"	0.302	0.314	0.331	5 PER 36" SHEET (1)	12" OC (1)	10 PER SPAN (2)	4" NET SPACING (1)
D2	VERCO PLB 18 GAGE	1 1/2"	0.302	0.314	0.331	11 PER 36" SHEET (1)	12" OC (1)	11 PER SPAN (2)	4" NET SPACING (1)
D3	VERCO PLB 20 GAGE	1 1/2"	0.219	0.230	0.237	3 PER 36" SHEET (1)	N/A	3 PER SPAN (2)	N/A

NOTES:
1. AS DENOTED BY (1) IN THE SCHEDULE, FASTENERS ARE SIMPSON STRONG-TIE XMQ114S1224 (#12 X 1 1/4" STRONG-DRIVE MEDIUM-HEAD SCREW WITH QUICK GUARD COATING) PER IAPMO ER-326
2. AS DENOTED BY (2) FASTENERS ARE SIMPSON STRONG-TIE XQ1S1214 (#12 X 1" SELF-DRILLING X METAL SCREW WITH QUICK GUARD COATING)PER IAPMO ER-326.
3. BASIS OF DESIGN FOR DECK DESIGNATIONSA ARE VERCO MANUFACTURING CO. ICC ESR-1735P. CONTRACTOR MAY SUBMIT SUBSTITUTES CONFORMING THE THE ABOVE MINIMUM PROPERTIES.
4. DECK TO BE 2-SPAN MINIMUM EXCEPT AT EYEBROWS.

10 STEEL DECK SCHEDULE — NOT TO SCALE

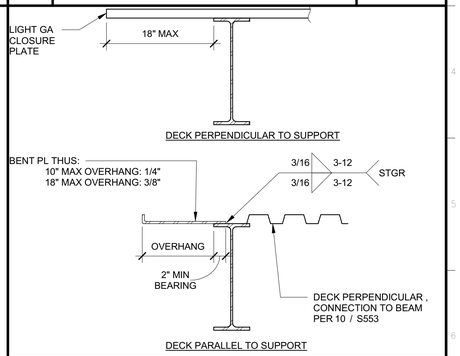

2 EDGE OF DECK — NOT TO SCALE

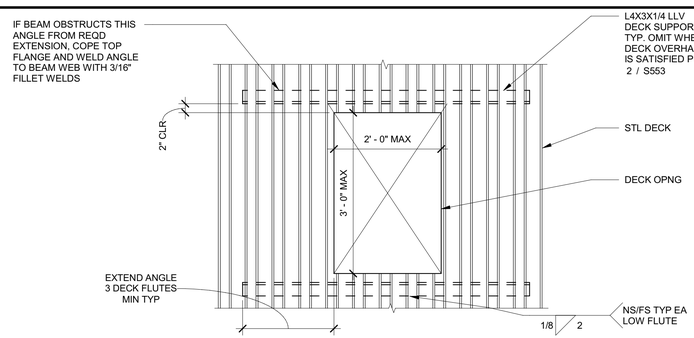

11 MEDIUM OPENING — NOT TO SCALE

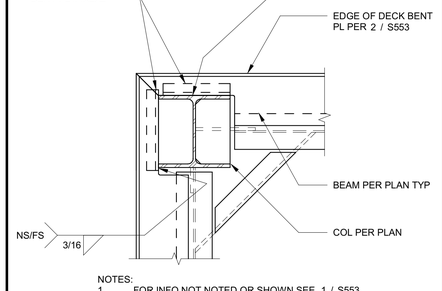

NOTES:
1. FOR INFO NOT NOTED OR SHOWN SEE 1 / S553

3 EXTERIOR COLUMN — NOT TO SCALE

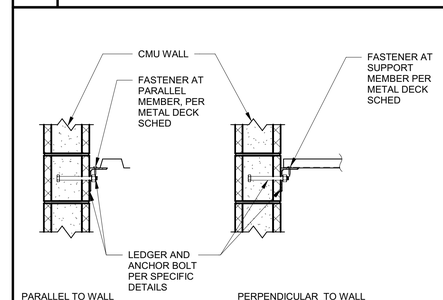

12 DECK AT LEDGER — NOT TO SCALE

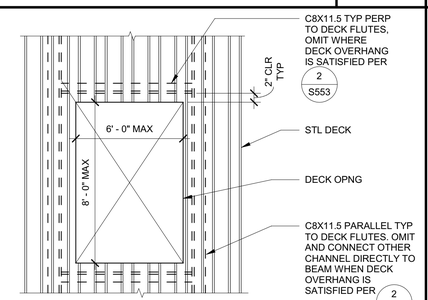

NOTES:
1. SEE BEAM CONNECTION SCHEDULE 15 / S551
2. SEE PLAN FOR LARGER OPENINGS

8 LARGE OPENING — NOT TO SCALE

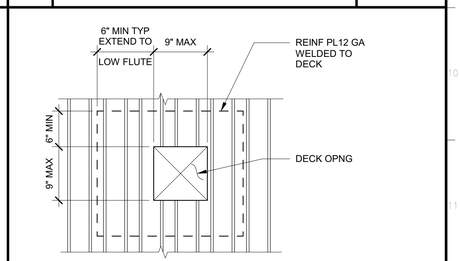

NOTES:
1. PLATE MAY BE PLACED ABOVE DECK AT CONTRACTOR'S OPTION. IN SUCH INSTANCES, REINF PL EXTENDED TO HIGH FLUTE.
2. AT ROUND OPNG PL MAY BE CUT SQUARE WITH EDGES FLUSH WITH HOLE IN DECK.
3. FOR LARGER OPENING, SEE 11 / S553 AND 8 / S553

4 SMALL OPENING — NOT TO SCALE

IDENTIFICATION STAMP
DIV. OF THE STATE ARCHITECT
APP: 03-121324 INC:
REVIEWED FOR
SS ☐ FLS ☐ ACS ☑
DATE: 09/14/2022

OFFICE OF THE STATE FIRE MARSHAL
APPROVED FIRE AND PANIC ONLY
09/07/22
21-0233
Approval of this plan does not authorize or approve any omission or deviation from applicable regulations. Final approval is subject to field inspection. One set of approved plans shall be available on the project site at all times.

GENERAL SERVICES
Department of General Services
Architecture & Engineering Sections
State of California
Real Estate Services Division
Project Management & Development Branch
707 Third Street, Suite 4-105
West Sacramento, California 95605

REGISTERED PROFESSIONAL ENGINEER
MARSHALL ROBERTS
No. S-G173
STRUCTURAL
STATE OF CALIFORNIA
1/21/22

DMV
State of California
Department of Motor Vehicles

Issue

No.	Date	Description
1	9/2/22	

Project
SANTA MARIA FIELD OFFICE REPLACEMENT
2770 SANTA MARIA WAY
SANTA MARIA, CA 93455
SANTA BARBARA COUNTY

MOTOR VEHICLES

Supervisor	Designed	Drawn
J.DIGIORGIO	M.ROBERTS	M.ROBERTS

DSA App No. | SFM Permit No.

Sheet Title
TYPICAL METAL DECK DETAILS

Project Number
DGS000000140725

Sheet Scale
Sheet Number
S553

Copyright © 2020, California Department of General Services - Real Estate Services Division

C:\Projects\DGS000000140725_STR_Marshall.Roberts.rvt
1/21/2022 2:27:38 PM
RELATIVE BORDER SCALE IN INCHES

STEEL SMRF CONNECTION SCHEDULE							
CONNECTION ID	BEAM	COL	Ts	Tc	Td	Wd	Db
1	W18X50	W14X132	1/2"	3/4"	1/4"	5/16"	19"
2	W18X65	W14X176	1/2"	NA	1/4"	5/16"	19"
3	W18X86	W14X159	1/2"	1"	7/8"	CJP	19"

NOTES:
1. BEAM TO COL CONNECTION PER 6 / S554

9 SMRF SCHEDULE — NOT TO SCALE

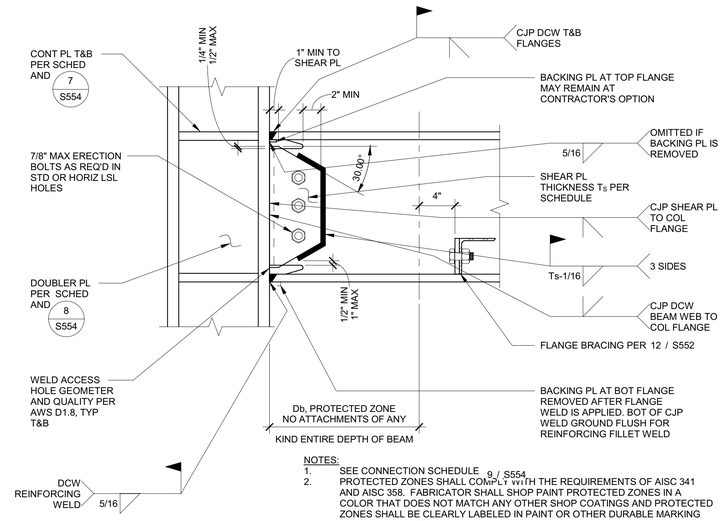

NOTES:
1. SEE CONNECTION SCHEDULE 9 / S554
2. PROTECTED ZONES SHALL COMPLY WITH THE REQUIREMENTS OF AISC 341 AND AISC 358. FABRICATOR SHALL SHOP PAINT PROTECTED ZONES IN A COLOR THAT DOES NOT MATCH ANY OTHER SHOP COATINGS AND PROTECTED ZONES SHALL BE CLEARLY LABELED IN PAINT OR OTHER DURABLE MARKING "PROTECTED ZONE: NO ATTACHMENTS ALLOWED IN THIS AREA".
3. DISCONTINUITIES CREATED BY FABRICATION AND/OR ERECTION SHALL BE REPAIRED PER AISC 341 I2.1 AND AWS D1.8, 6.15.
4. NO DECK FASTENERS TO BEAM SHALL OCCUR WITHIN PROTECTED ZONE.
5. NO WELDED, BOLTED, SCREWED OR SHOT-IN ATTACHMENTS SHALL OCCUR WITHIN PROTECTED ZONES.
6. NOTE THAT THIS IS A TYPICAL DETAIL.SLOPING BEAMS MAY OCCUR. TOP OF COLUMN MAY OCCUR AT TOP OF BEAM.

6 SMRF BEAM TO COLUMN CONNECTION — NOT TO SCALE

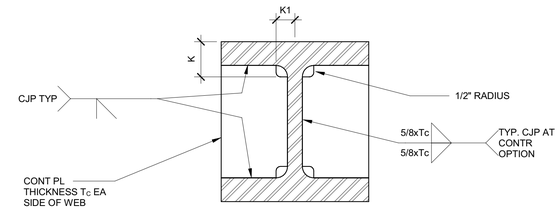

7 SMRF CONTINUITY PLATES — NOT TO SCALE

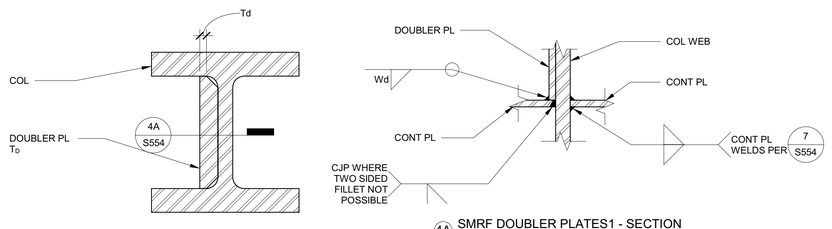

4A SMRF DOUBLER PLATES1 - SECTION
1 1/2" = 1'-0"

8 SMRF DOUBLER PLATES — NOT TO SCALE

IDENTIFICATION STAMP
DIV. OF THE STATE ARCHITECT
APP: 03-121324 INC:
REVIEWED FOR
SS ☐ FLS ☐ ACS ☑
DATE: 09/14/2022

OFFICE OF THE STATE FIRE MARSHAL
APPROVED FIRE AND PANIC ONLY
09/07/22
21-0233
Approval of this plan does not authorize or approve any omission or deviation from applicable regulations. Final approval is subject to field inspection. One set of approved plans shall be available on the project site at all times.

GENERAL SERVICES
Department of General Services
Architecture & Engineering Sections
State of California
Real Estate Services Division
Project Management & Development Branch
707 Third Street, Suite 4-105
West Sacramento, California 95605

REGISTERED PROFESSIONAL ENGINEER
MARSHALL ROBERTS
No. S-6173
STRUCTURAL
STATE OF CALIFORNIA
1/21/22

DMV
State of California
Department of Motor Vehicles

Issue		
No.	Date	Description
1	9/2/22	

Project
SANTA MARIA FIELD OFFICE REPLACEMENT

2770 SANTA MARIA WAY
SANTA MARIA, CA 93455
SANTA BARBARA COUNTY

MOTOR VEHICLES

Supervisor	Designed	Drawn
J.DIGIORGIO	M.ROBERTS	M.ROBERTS

DSA App No. | SFM Permit No.

Sheet Title
STEEL SPECIAL MOMENT RESISTING FRAME DETAILS

Project Number
DGS000000140725

Sheet Scale

Sheet Number
S554

Copyright © 2020, California Department of General Services- Real Estate Services Division

C:\Projects\DGS000000140725_STR_Marshall.Roberts.rvt
1/21/2022 2:27:39 PM

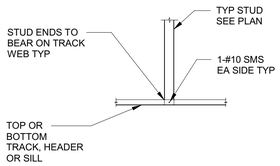

17 METAL STUD TO TRACK — NOT TO SCALE

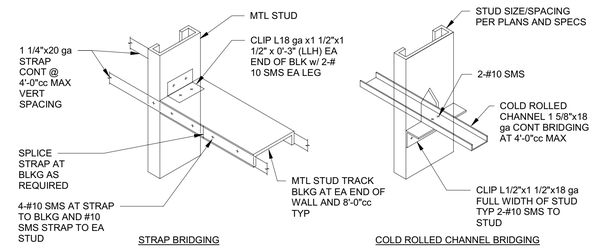

NOTES:
1. ALL EXTERIOR WALLS SHALL HAVE BRIDGING SHOWN.
2. BRIDGING FOR 4" AND SMALLER STUDS MAY BE CONSTRUCTED OF COLD ROLLED CHANNEL OR STRAPS AT CONTRACTOR'S OPTION UNLESS NOTED OTHERWISE.
3. FOR INTERIOR WALLS ONLY, THE FOLLOWING NOTES APPLY:
   A. WHERE FULL-HEIGHT SHEATHING OCCURS ON BOTH SIDES OF METAL STUD FRAMING, THE BRIDGING MAY BE OMITTED.
   B. WHERE STRAP BRIDGING OCCURS AT WALLS SHEATHED ON ONLY ONE SIDE, STRAP MAY BE OMITTED ON THE SHEATHING SIDE.

13 METAL STUD BRIDGING — NOT TO SCALE

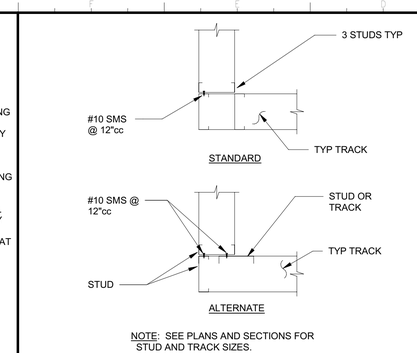

NOTE: SEE PLANS AND SECTIONS FOR STUD AND TRACK SIZES.

5 WALL CORNER DETAIL — NOT TO SCALE

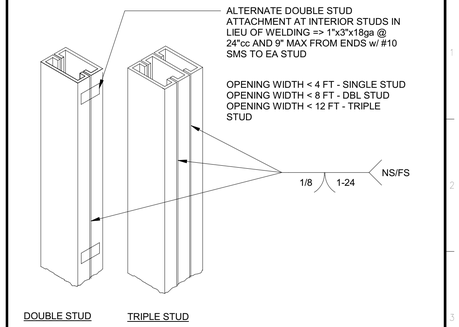

1 DBL & TRIPPLE STUDS — NOT TO SCALE

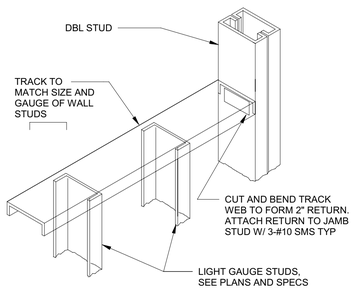

18 SILL OPNG < 4 FT — NOT TO SCALE

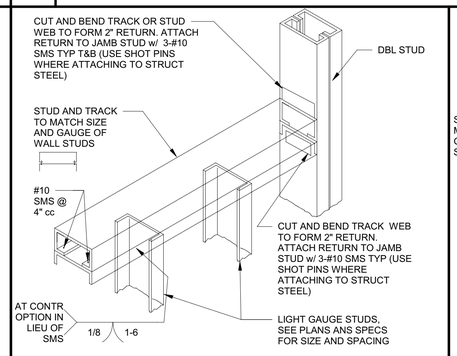

14 SILL OPNG < 8 FT — NOT TO SCALE

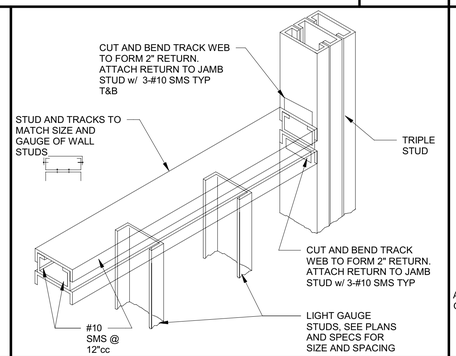

10 SILL OPNG < 12 FT — NOT TO SCALE

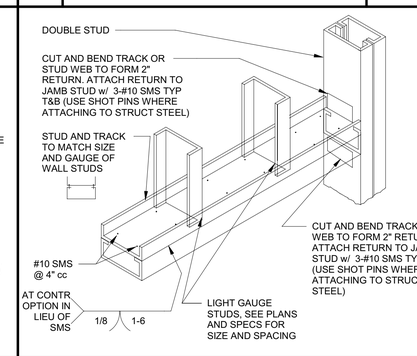

6 HDR ONPG < 4 FT — NOT TO SCALE

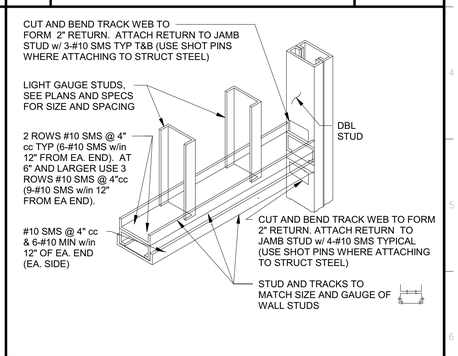

2 HDR OPNG < 8 FT — NOT TO SCALE

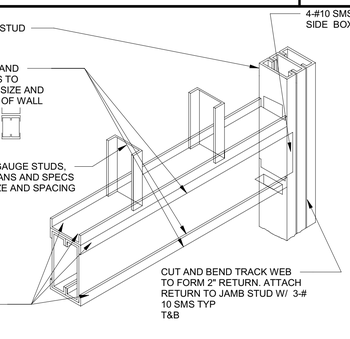

19 HDR OPNG < 12 FT — NOT TO SCALE

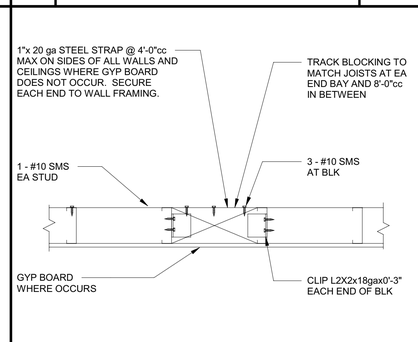

15 STRAP BRACING — NOT TO SCALE

INTERIOR METAL STUD FRAMING SCHEDULE			
DEPTH	SSMA DESIGNATION	MAX HEIGHT	
		16" SPACING	24" SPACING
3 5/8"	362S162-33	17'-6"	15'-4"
3 5/8"	362S162-43	19'-1"	16'-8"
3 5/8"	362S162-54	20'-5"	17'-10"
3 5/8"	362S162-68	21'-10"	19'-1"
4"	400S162-33	18'-11"	16'-6"
4"	400S162-43	2'-7"	18'-0"
4"	400S162-54	22'-1"	19'-3"
4"	400S162-68	23'-7"	20'-7"
6"	600S162-33	26'-0"	22'-8"
6"	600S162-43	28'-4"	24'-9"
6"	600S162-54	30'-4"	26'-6"
6"	600S162-68	32'-7"	28'-5"
8"	800S162-33	32'-9"	28'-7"
8"	800S162-43	35'-8"	31'-2"
8"	800S162-54	38'-4"	33'-6"
8"	800S162-68	41'-1"	35'-11"
10"	1000S162-33	28'-7"	-

NOTES:
1. STUDS SHALL BE DEPTH AS INDICATED ON ARCH DRAWINGS AND GAUGE AS DETERMINED BY HEIGHT OF WALL AND THE SCHEDULE ABOVE.
2. SEE ELEVATION FOR TYPICAL WALL FRAMING CONDITIONS.
3. DESIGNATION CONFORMS TO STEEL STUD MANUFACTURERS ASSOCIATION STANDARDS.

12 FRAMING SCHEDULE — NOT TO SCALE

NOTES:
1. SEE OTHER DETAILS THIS SHEET FOR ATTACHMENT OF TRACK TO STRUCTURE. SCREW AND SHOT PIN ATTACHMENTS AT TRACKWEB SHALL BE LOCATED IN SLOTTED HOLES.
2. SEE ARCH DRAWINGS AND MFR UL LISTING FOR REQ'D DETAILS AT FIRE RATED WALLS

7 SLIP TOP TRACK — NOT TO SCALE

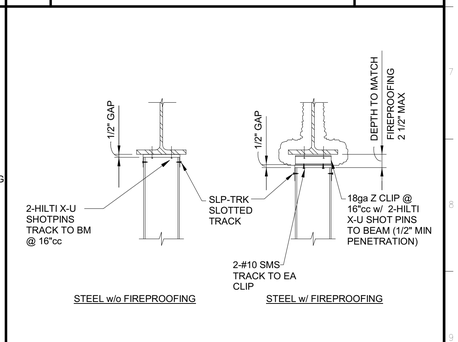

3 SLIP TRACK TO BEAM — NOT TO SCALE

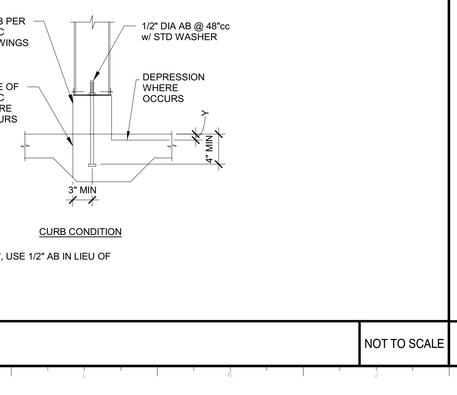

NOTE: WHERE "Y" IS GREATER THAN 1", USE 1/2" AB IN LIEU OF POWDER DRIVEN FASTENERS.

20 PARTITION BASE ANCHORAGE — NOT TO SCALE

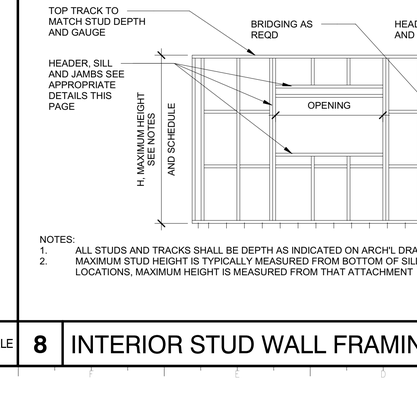

NOTES:
1. ALL STUDS AND TRACKS SHALL BE DEPTH AS INDICATED ON ARCH'L DRAWINGS & GAUGE AS DETERMINED BY THE HEIGHT OF THE WALL AND SCHEDULE.
2. MAXIMUM STUD HEIGHT IS TYPICALLY MEASURED FROM BOTTOM OF SILL TRACK TO TOP OF TOP TRACK. WHERE STUD IS ATTACHED TO STRUCTURE AT INTERMEDIATE LOCATIONS, MAXIMUM HEIGHT IS MEASURED FROM THAT ATTACHMENT

8 INTERIOR STUD WALL FRAMING ELEVATION — NOT TO SCALE

IDENTIFICATION STAMP
DIV. OF THE STATE ARCHITECT
APP: 03-121324 INC: A
REVIEWED FOR
SS ☐ FLS ☐ ACS ☑
DATE: 09/14/2022

OFFICE OF THE STATE FIRE MARSHAL
APPROVED FIRE AND PANIC ONLY
09/07/22
21-0233
Approval of this plan does not authorize or approve any omission or deviation from applicable regulations. Final approval is subject to field inspection. One set of approved plans shall be available on the project site at all times.

DGS GENERAL SERVICES
Department of General Services
Architecture & Engineering Sections
State of California
Real Estate Services Division
Project Management & Development Branch
707 Third Street, Suite 4-105
West Sacramento, California 95605

REGISTERED PROFESSIONAL ENGINEER
MARSHALL ROBERTS
No. S-G173
STRUCTURAL
STATE OF CALIFORNIA
1/21/22

DMV
State of California
Department of Motor Vehicles

Issue

No.	Date	Description
1	9/2/22	

Project
SANTA MARIA FIELD OFFICE REPLACEMENT
2770 SANTA MARIA WAY
SANTA MARIA, CA 93455
SANTA BARBARA COUNTY
MOTOR VEHICLES

Supervisor	Designed	Drawn
J.DIGIORGIO	M.ROBERTS	M.ROBERTS

DSA App No. | SFM Permit No.

Sheet Title
TYPICAL INTERIOR METAL STUD DETAILS

Project Number
DGS000000140725

Sheet Scale
Sheet Number
S581

Copyright © 2020, California Department of General Services - Real Estate Services Division

C:\Projects\DGS000000140725_STR_Marshall.Roberts.rvt
1/21/2022 2:27:41 PM

RELATIVE BORDER SCALE IN INCHES

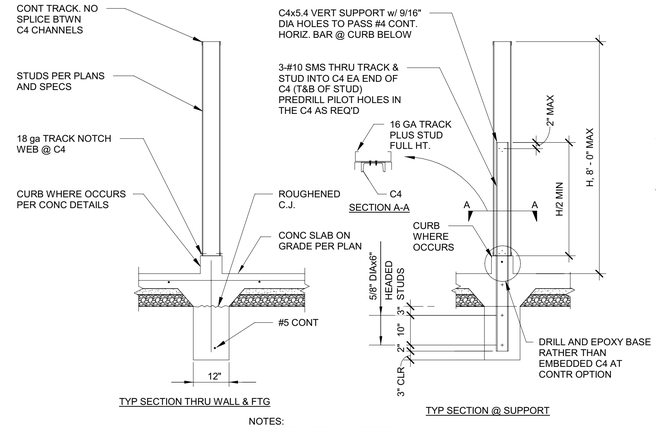

TYP SECTION THRU WALL & FTG

TYP SECTION @ SUPPORT

NOTES:
1. PROVIDE C4 SUPPORTS AT:
   - A. 10'-0" OC FOR H < 5'-0"
   - B. 8'-0" OC FOR H < 6'-6"
   - C. 6'-0" OC FOR H < 7'-0"
   - D. 4'-0" OC FOR H < 8'-0"
2. WALL CORNERS MAY BE CONSIDERED AS A SUPPORT.

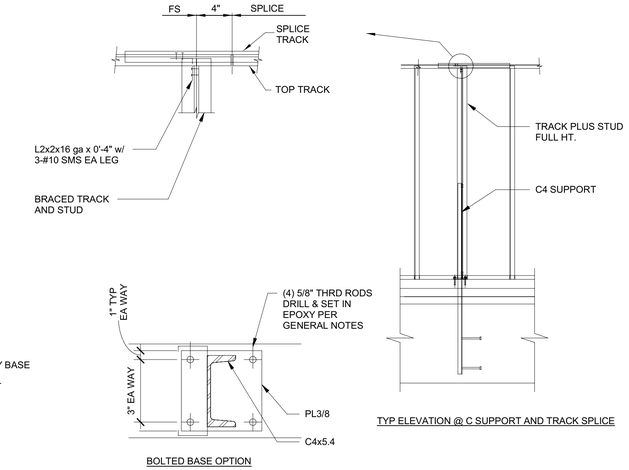

TYP ELEVATION @ C SUPPORT AND TRACK SPLICE

BOLTED BASE OPTION

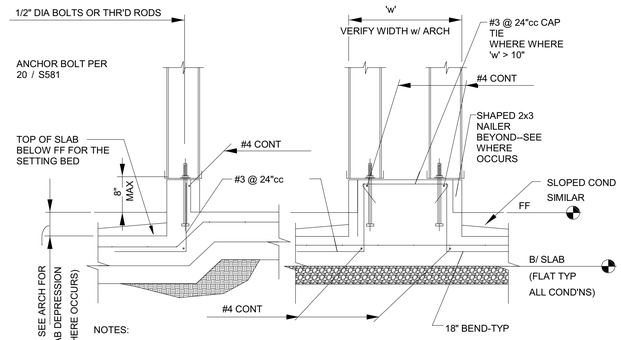

NOTES:
1. DETAIL APPLIES SIMILAR AT CONDITIONS WITH SLAB SLOPED TO DRAIN w/ B/ SLAB BASED ON PROVIDING FULL SLAB THICKNESS BELOW LOCATION OF LOWEST POINT (DRAIN).
2. PROVIDE FULL SLAB THICKNESS AND FULL SUB-BASE THICKNESS THROUGHOUT ALL DEPRESSED AND/OR SLOPED AREAS PER TYPICAL FOUNDATION NOTES AND DETAILS.

18 PARTIAL HEIGHT PARTITIONS — NOT TO SCALE

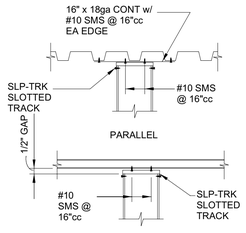

NOTE: WHERE CONCRETE FILL OCCURS OVER METAL DECK, USE HILTI X-U SHOT PINS w/ STEEL WASHERS IN LIEU OF SMS.

19 SLIP TRACK TO DECK — NOT TO SCALE

15 TOP TRACK — NOT TO SCALE

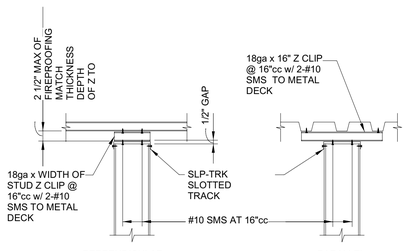

NOTE: WHERE CONCRETE FILL OCCURS OVER METAL DECK, USE HILTI X-U SHOT PINS w/ STEEL WASHERS IN LIEU OF SMS.

11 SLIP TRACK TO CONC — NOT TO SCALE

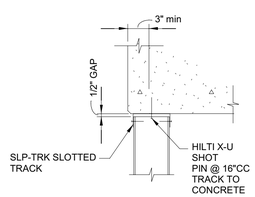

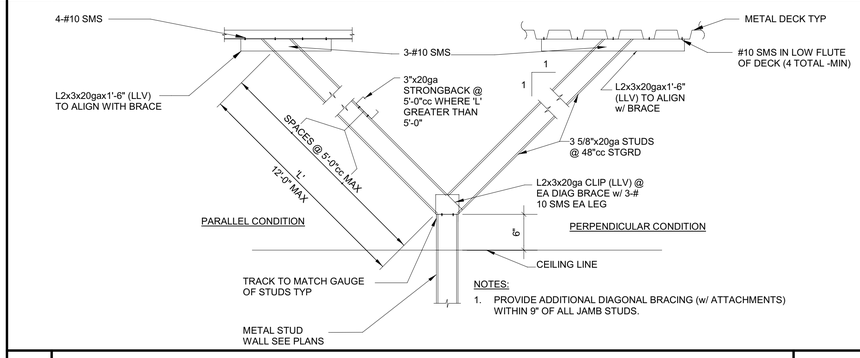

NOTES:
1. PROVIDE ADDITIONAL DIAGONAL BRACING (w/ ATTACHMENTS) WITHIN 9" OF ALL JAMB STUDS.

16 PARTIAL HEIGHT STUD BRACING — NOT TO SCALE

6 STUD WALL AND CURB AT DEPRESSED SLAB — NOT TO SCALE

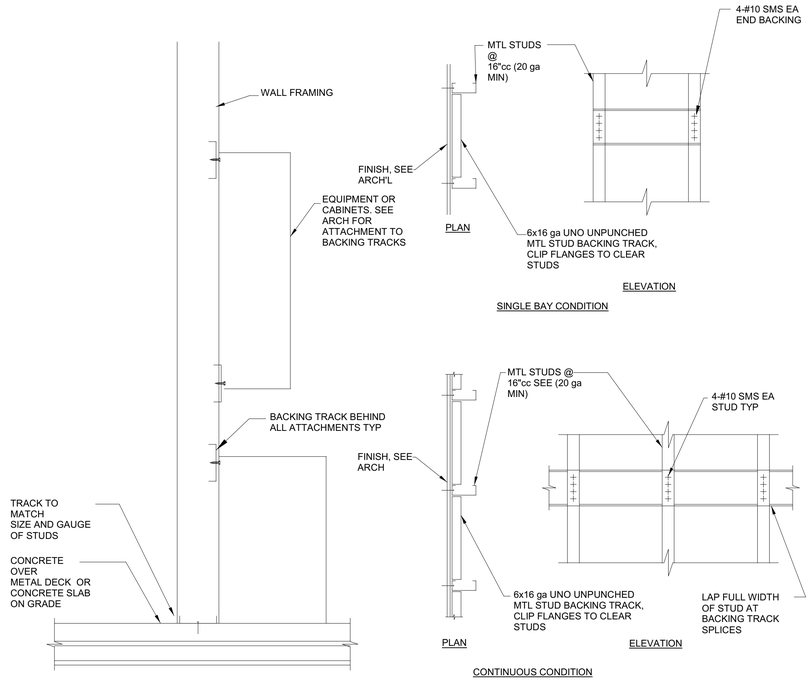

8 BACKING PLATE — NOT TO SCALE

IDENTIFICATION STAMP
DIV. OF THE STATE ARCHITECT
APP: 03-121324 INC:
REVIEWED FOR
SS ☐ FLS ☐ ACS ☑
DATE: 09/14/2022

OFFICE OF THE STATE FIRE MARSHAL
APPROVED FIRE AND PANIC ONLY
09/07/22
21-0233
Approval of this plan does not authorize or approve any omission or deviation from applicable regulations. Final approval is subject to field inspection. One set of approved plans shall be available on the project site at all times.

DGS GENERAL SERVICES
Department of General Services
Architecture & Engineering Sections
State of California
Real Estate Services Division
Project Management & Development Branch
707 Third Street, Suite 4-105
West Sacramento, California 95605

REGISTERED PROFESSIONAL ENGINEER
MARSHALL ROBERTS
No. S-6173
STRUCTURAL
STATE OF CALIFORNIA
1/21/22

DMV
State of California
Department of Motor Vehicles

Issue		
No.	Date	Description
1	9/2/22	

Project
SANTA MARIA FIELD OFFICE REPLACEMENT
2770 SANTA MARIA WAY
SANTA MARIA, CA 93455
SANTA BARBARA COUNTY

MOTOR VEHICLES

Supervisor	Designed	Drawn
J.DIGIORGIO	M.ROBERTS	M.ROBERTS

DSA App No. | SFM Permit No.

Sheet Title
TYPICAL INTERIOR METAL STUD DETAILS

Project Number
DGS000000140725

Sheet Scale
Sheet Number
S582

Copyright © 2020, California Department of General Services: Real Estate Services Division

C:\Projects\DGS000000140725_STR_Marshall Roberts.rvt
1/21/2022 2:27:43 PM

RELATIVE BORDER SCALE IN INCHES

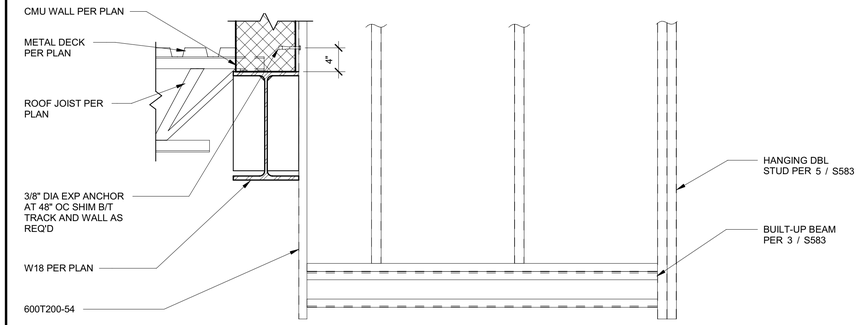

13 HANGING WALL AT CMU — 1" = 1'-0"

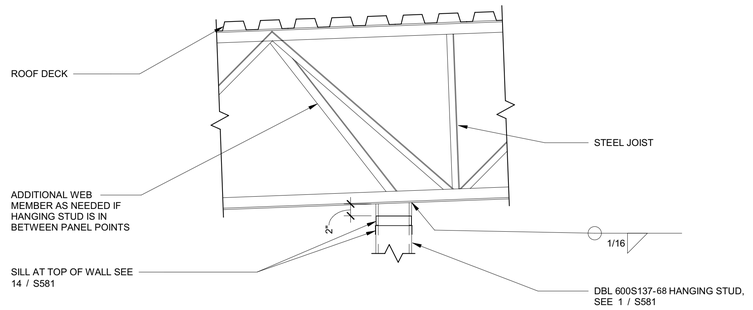

5 TOP OF HANGING WALL — 1" = 1'-0"

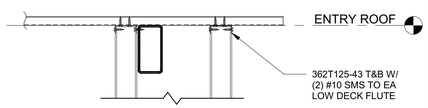

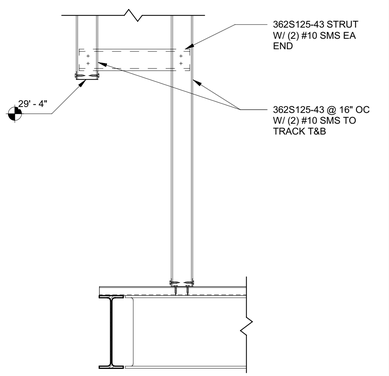

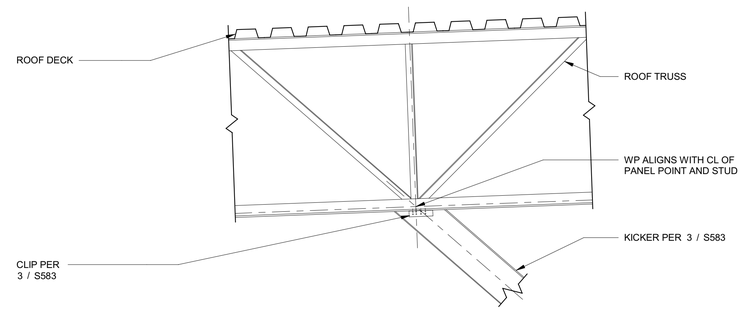

6 KICKER TO TRUSS — 1" = 1'-0"

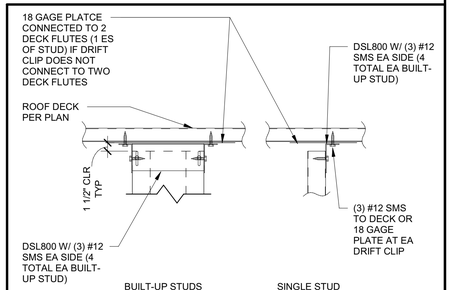

NOTE: DSL800 IS A VERTICALLY SLOTTED DRIFT CLIP MADE BY THE STEEL NETWORK PER ICC-ES ESR-2049 OR EQUIVALENT. SMS ARE INSTALLED VERTICALLY IN THE CENTER OF THE SLOT TO ALLOW FOR VERTICAL DEFLECTION UP AND DOWN.

15 TOP OF ENTRY STUDS — 1 1/2" = 1'-0"

11 TOP OF STOREFRONT — 1" = 1'-0"

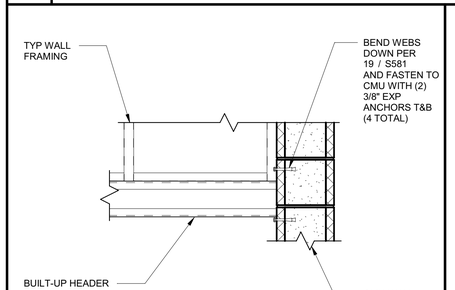

7 HANGING WALL AT CMU — 1" = 1'-0"

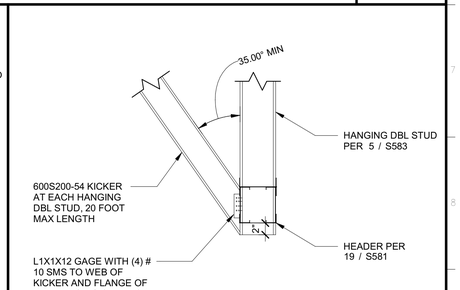

3 KICKER AT SOFFIT — 1" = 1'-0"

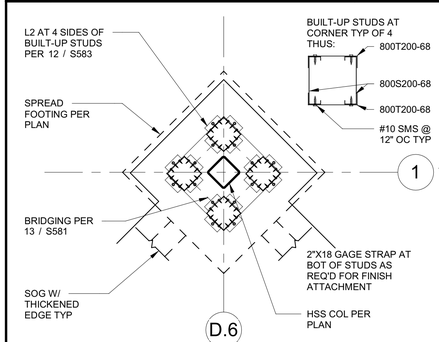

16 FRONT ENTRY COLUMN — 1/2" = 1'-0"

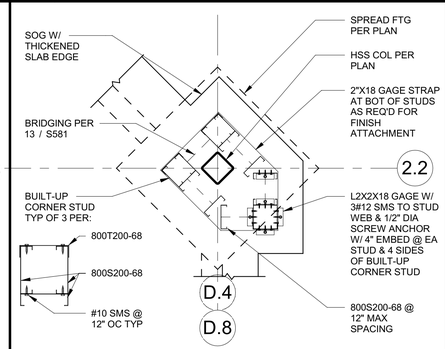

12 ENTRY SIDE COLUMNS — 1/2" = 1'-0"

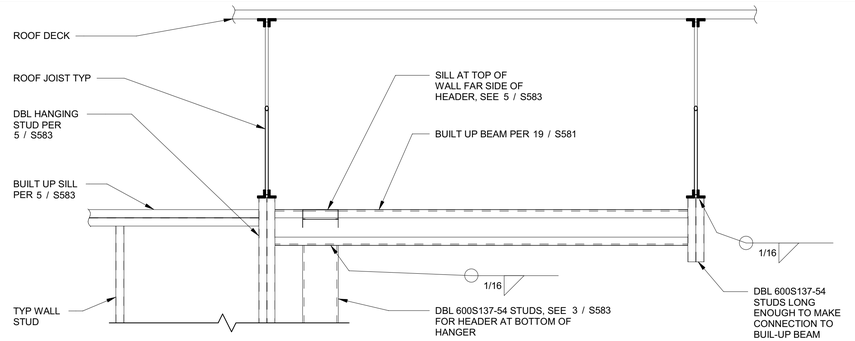

8 HANGING WALL — 1" = 1'-0"

IDENTIFICATION STAMP
DIV. OF THE STATE ARCHITECT
APP: 03-121324 INC: A
REVIEWED FOR
SS ☐ FLS ☐ ACS ☑
DATE: 09/14/2022

OFFICE OF THE STATE FIRE MARSHAL
APPROVED FIRE AND PANIC ONLY
09/07/22
21-0233
Approval of this plan does not authorize or approve any omission or deviation from applicable regulations. Final approval is subject to field inspection. One set of approved plans shall be available on the project site at all times.

DGS GENERAL SERVICES

Department of General Services
Architecture & Engineering Sections
State of California
Real Estate Services Division
Project Management & Development Branch
707 Third Street, Suite 4-105
West Sacramento, California 95605

REGISTERED PROFESSIONAL ENGINEER
MARSHALL ROBERTS
No. S-6173
STRUCTURAL
STATE OF CALIFORNIA
1/21/22

DMV
State of California
Department of Motor Vehicles

Issue

No.	Date	Description
1	9/2/22	

Project
SANTA MARIA FIELD OFFICE REPLACEMENT
2770 SANTA MARIA WAY
SANTA MARIA, CA 93455
SANTA BARBARA COUNTY

MOTOR VEHICLES

Supervisor	Designed	Drawn
J.DIGIORGIO	M.ROBERTS	M.ROBERTS

DSA App No. | SFM Permit No.

Sheet Title
SPECIFIC METAL STUD DETAILS

Project Number
DGS000000140725

Sheet Scale

Sheet Number
S583

Copyright © 2020, California Department of General Services - Real Estate Services Division

C:\Projects\DGS000000140725_STR_Marshall.Roberts.rvt
1/21/2022 2:27:45 PM

RELATIVE BORDER SCALE IN INCHES

ø	ROUND
@	AT
%	PERCENT
&	AND
℄	CENTERLINE
A	AMPERE
ABC	ABOVE CEILING
AD	ACCESS DOOR
ADA	AMERICAN DISABILITY ACT
AFF	ABOVE FINISHED FLOOR
AFG	ABOVE FINISHED GRADE
AFUE	ANNUAL FUEL UTILIZATION EFFICIENCY
AMP	AMPERE
BAAQMD	BAY AREA AIR QUALITY MANAGEMENT DISTRICT
BFF	BELOW FINISHED FLOOR
BHP	BRAKE HORSE POWER
BLDG	BUILDING
BTU	BRITISH THERMAL UNIT
BTUH	BRITISH THERMAL UNIT PER HOUR
BV	BALL VALVE
CAP	CAPACITY
CD	CEILING DIFFUSER
CFM	CUBIC FEET PER MINUTE
CFC	CALIFORNIA FIRE CODE
CMC	CALIFORNIA MECHANICAL CODE
COND	CONDENSER
COTG	CLEANOUT TO GRADE
CU FT	CUBIC FEET
CVB	CONCRETE VALVE BOX
CW	DOMESTIC COLD WATER
D	DROP
DB	DRY BULB
DBA	DECIBEL A-WEIGHTING
DCV	DEMAND CONTROL VENTILATION
DDC	DIRECT DIGITAL CONTROLS
DFT	DRY FILM THICKNESS
DVA	CALIFORNIA DEPARTMENT OF VETERANS AFFAIRS
DWV	DRAIN, WASTE AND VENT
EAT	ENTERING AIR TEMPERATURE
EER	ENERGY EFFICIENCY RATING
EF	EXHAUST FAN
EFF	EFFICIENT
EL	ELEVATION
ESP	EXTERNAL STATIC PRESSURE
EXH	EXHAUST
f	CUBIC FEET PER MINUTE
F	FAHRENHEIT
FC	FLEXIBLE CONNECTOR
FCO	FLOOR CLEANOUT
FD	FIRE DAMPER, FLOOR DRAIN
FF	FINISHED FLOOR
FLA	FULL LOAD AMPS
FNPT	FEMALE NATIONAL PIPE THREAD
FPM	FEET PER MINUTE
FPS	FEET PER SECOND
FPT	FINE PIPE THREAD
FS	FLOOR SINK
FSD	FIRE/SMOKE DAMPER
FT	FEET
FTR	FLUE THROUGH ROOF
FW	FIRE WATER
G	GAS
GA	GAUGE
GAL	GALLONS
GALV	GALVANIZED
GCO	GRADE CLEANOUT
GD	GARBAGE DISPOSAL
GPF	GALLONS PER FLUSH
GPH	GALLONS PER HOUR
GPM	GALLONS PER MINUTE
GYP	GYPSUM
HD	HEAD
HEX	HEXAGON
HH	HOSE HYDRANT
HP	HORSE POWER
HTG	HEATING
HW	DOMESTIC HOT WATER
HZ	HERTZ
ID	INSIDE DIAMETER
IE	INVERT ELEVATION
IN	INCHES
IOR	INSPECTOR OF RECORDS
IWH	INSTANTANEOUS WATER HEATER
KW	KILOWATT
LAT	LEAVING AIR TEMPERATURE
LAV	LAVATORY
LBS	POUNDS
LCD	LIQUID CRYSTAL DISPLAY
LH	LATENT HEAT
LPG	LIQUID PETROLEUM GAS
LT	LAUNDRY TUB

MAV	MANUAL AIR VENT
MAX	MAXIMUM
MBH	THOUSAND BTU PER HOUR
MBTU	THOUSAND BTU PER HOUR
MCA	MINIMUM CIRCUIT AMPACITY
MCC	MOTOR CONTROL CENTER
MD	MANUAL DAMPER
MIL	THOUSANDTH OF AN INCH
MIN	MINIMUM
N	NEW
N/A	NOT APPLICABLE
NC	NORMALLY CLOSED
NIC	NOT IN CONTRACT
NO	NUMBER, NORMALLY OPEN
NOX	NITROGEN OXIDE
NPT	NATIONAL PIPE THREAD
NTS	NOT TO SCALE
O2	OXYGEN
OA	OUTSIDE AIR
OBD	OPPOSED BLADE DAMPER
OH	OVERHEAD
OS&Y	OUTSIDE STEM AND YOKE VALVE
OSA	OUTSIDE SUPPLY AIR
OSHA	OCCUPATIONAL SAFETY AND HEALTH
PD	PRESSURE DROP
PH	PHASE
PPM	PARTS PER MILLION
PRV	PRESSURE REDUCING VALVE
PSI	POUNDS PER SQUARE INCH
PSIA	POUNDS PER SQUARE INCH ABSOLUTE
PSIG	POUNDS PER SQUARE INCH GAUGE
QTY	QUANTITY
R	RISER
RA	RETURN AIR
RD	ROUND, ROOF DRAIN
REQ'D	REQUIRED
RET	RETURN
RG	RETURN GRILLE
RGB	RED, GREEN, BLUE (COLOR CODE)
RLD	RELIEF DAMPER
RPM	REVOLUTIONS PER MINUTE
SA	SUPPLY AIR
SCH	SCHEDULE
SD	STORM DRAIN
SEER	SEASONAL ENERGY EFFICIENCY RATING
SF	SQUARE FEET
SHO	SHOWER
SM	SHEET METAL
SOV	SHUT OFF VALVE
SP	STATIC PRESSURE
SQ. FT.	SQUARE FEET
SS	SANITARY SEWER, SERVICE SINK, STAINLESS STEEL
SSPC	SOCIETY FOR PROTECTIVE COATINGS
T&P	TEMPERATURE AND PRESSURE
TCP	TEMPERATURE CONTROL PANEL
TCV	TEMPERATURE CONTROL VALVE
TDH	TOTAL DEVELOPED HEAD
TEMP	TEMPERATURE
TJI	TRUSS JOIST I-BEAM
TMV	TEMPERATURE MIXING VALVE
TP	TOTAL PRESSURE, TRAP PRIMER
TSP	TOTAL STATIC PRESSURE
TW	TEMPERED WATER, TREATED WATER, SOFT WATER
TWR	TEMPERED WATER RETURN, TREATED WATER RETURN, SOFT WATER RETURN
TYP	TYPICAL
UG	UNDER GROUND/GRADE
UH	UNIT HEATER
UL	UNDERWRITERS LABORATORY
UR	URINAL
US	UNDER SLAB
V	VOLT, VENT
VAC	VOLT ALTERNATING CURRENT
VB	VALVE BOX, VACUUM BREAKER
VCD	VOLUME CONTROL DAMPER
VD	VOLUME DAMPER (HAND OPERATOR)
VTR	VENT THRU ROOF
W	WITH
WC	WATER CLOSET, WATER COLUMN
WCO	WALL CLEANOUT
WH	WATER HEATER
WHA	WATER HAMMER ARRESTOR
WP	WORKING PRESSURE
WSFU	WATER SUPPLY FIXTURE UNIT

3 ABBREVIATIONS

NO SCALE

1. CONTRACTOR SHALL VERIFY FIELD CONDITIONS AND EXISTING SYSTEMS TO BE IMPACTED BY THIS WORK AND NOTIFY THE STATE OF ANY DISCREPANCIES BEFORE COMMENCING WORK.
2. COORDINATE PIPES ROUTING IN FIELD WITH STRUCTURAL MEMBERS, OTHER PIPING, AND ELECTRICAL CONDUITS.
3. SUPPORTS, ANCHORAGE AND RESTRAINTS FOR ALL HVAC DUCTS & PIPES SHALL BE IN ACCORDANCE WITH THE LATEST EDITIONS OF SMACNA AND GUIDELINES FOR SEISMIC RESTRAINTS OF MECHANICAL SYSTEMS. CONTRACTOR SHALL PROVIDE ALL SUPPORTING DOCUMENTATION REQUIRED BY THE STATE.
4. CONTRACTOR SHALL BE RESPONSIBLE FOR AS-BUILTS DRAWINGS. DRAWINGS SHALL RECORD THE LOCATION AND SIZE (ABOVE FINISHED CEILING AND BELOW FLOOR/GRADE) OF ALL NEW AND EXISTING WORK AFFECTED BY THIS PROJECT.
5. UNLESS OTHERWISE NOTED, DUCT AND PIPE SIZES SHOWN ARE IN INCHES.
6. COORDINATE HVAC DUCT ROUTING IN FIELD WITH STRUCTURAL MEMBERS, PIPING, AND ELECTRICAL CONDUITS.
7. SEWER AND DOMESTIC COLD WATER CONNECTIONS TO STUBS SHOWN ON DRAWINGS SHALL BE MADE IN ACCORDANCE WITH THE FACILITY SEWER, WATER, AND FIRE DEPARTMENT REQUIREMENTS.
8. THE LOCATIONS AND SIZES SHOWN FOR ALL UTILITIES ARE APPROXIMATE ONLY. CONTRACTOR SHALL FIELD VERIFY THEIR EXACT LOCATION, INVERTS AND SIZE PRIOR TO BEGINNING WORK. CONTRACTOR IS RESPONSIBLE FOR VERIFICATION OF ALL DIMENSIONS, SITE CONDITIONS AND GENERAL JOB CONDITIONS.
9. CONTRACTOR SHALL ADD CLEANOUTS AND TRAP PRIMERS AS NEEDED PER PLUMBING CODE, FLOOR AND WALL FINISHES ETC., ALL CLEANOUTS AND TRAP PRIMERS SHALL BE ACCESSIBLE AND LOCATIONS COORDINATED WITH EQUIPMENT AND THE STATE PRIOR TO INSTALLATION.
10. PROVIDE MARKERS FOR ALL PLUGGED TEES AND PLUGGED WYES.
11. ALL COLD WATER BRANCHES SERVING MORE THAN ONE FIXTURE SHALL BE FURNISHED WITH AN ISOLATION VALVE IN EACH LINE AT THE POINT OF CONNECTION TO THE COLD WATER MAIN LINES ABOVE THE CEILING OR AS SHOWN.
12. PROVIDE INDIVIDUAL STOPS AT EACH FIXTURE ON BOTH HOT AND COLD WATER SUPPLIES, UNLESS OTHERWISE NOTED.
13. UNLESS OTHERWISE NOTED, SANITARY SEWER SHALL BE UNDERSLAB OR BELOW GRADE, VENT SHALL BE ABOVE CEILING, DOMESTIC HOT AND COLD WATER SHALL BE ABOVE CEILING, NATURAL GAS SHALL BE ABOVE CEILING.

1 GENERAL NOTES

LIGHT TROFFER W/ SUPPLY DIFFUSER

LIGHT TROFFER W/ RETURN GRILLE

CEILING DIFFUSER (4 WAY THROW PATTERN)

CEILING REGISTER/GRILLE (RETURN OR TRANSFER)

CEILING REGISTER/GRILLE (EXHAUST)

SIDEWALL SUPPLY REGISTER

SIDEWALL REGISTER/GRILLE (RETURN, EXHAUST, OR TRANSFER)

SUPPLY AIR DUCT SECTION

RETURN AIR DUCT SECTION

EXHAUST AIR DUCT SECTION

ITEM TO BE RELOCATED

ITEM TO BE DEMOLISHED

DUCT CAP

MANUAL VOLUME DAMPER

LINED DUCT

FLEXIBLE DUCT (60" MAXIMUM IN LENGTH)

VARIABLE AIR VOLUME TERMINAL UNIT

THERMOSTAT (+48" MOUNTING HEIGHT) T

CARBON DIOXIDE (CO2) SENSOR (+48" MOUNTING HEIGHT) C

OCCUPANCY SENSOR (+48" MOUNTING HEIGHT) O

POINT OF CONNECTION

KEYED NOTE 1

DIFFUSER, REGISTER, GRILLE CALL-OUT — 12x12 SD-1 / 200f, 8"ø — NECK SIZE, TAG / CFM, RUNOUT SIZE

2 HVAC SYMBOLS

IDENTIFICATION STAMP
DIV. OF THE STATE ARCHITECT
APP: 03-121324 INC: A
REVIEWED FOR
SS ☐ FLS ☐ ACS ☑
DATE: 09/14/2022

OFFICE OF THE STATE FIRE MARSHAL
APPROVED FIRE AND PANIC ONLY
09/07/22
21-0233
Approval of this plan does not authorize or approve any omission or deviation from applicable regulations. Final approval is subject to field inspection. One set of approved plans shall be available on the project site at all times.

DGS GENERAL SERVICES

Department of General Services
Architecture & Engineering Sections
State of California
Real Estate Services Division
Project Management & Development Branch
707 Third Street, Suite 4-105
West Sacramento, California 95605

REGISTERED PROFESSIONAL ENGINEER
MATTHEW TODD MILES
No. M29425
MECHANICAL
STATE OF CALIFORNIA
7/12/2022

DMV
State of California
Department of Motor Vehicles

Issue

No.	Date	Description
1	9/2/22	

Project
SANTA MARIA FIELD OFFICE REPLACEMENT
2770 SANTA MARIA WAY
SANTA MARIA, CA 93455
SANTA BARBARA COUNTY
DEPT OF MOTOR VEHICLES

Supervisor	Designed	Drawn
M.MILES	S.HANNA	S.HANNA

DSA App No. 03-121324
SFM Permit No. 21-S-0233-CP-ER

Sheet Title
MECHANICAL ABBREVIATIONS, SYMBOLS & NOTES

Project Number
DGS000000140725

Reference North
Sheet Scale NONE
Sheet Number M001

Copyright © 2022, California Department of General Services - Real Estate Services Division

RELATIVE BORDER SCALE IN INCHES 0 1 2 3

CAD File: X:\Projects\14xxxx\140725\DWG\PLTM001 Mechanical Abbreviations, symbols and notes.dwg Plot Date: Jul 04, 2022 - 11:54pm Plotted by: i7-4770K

MARK	MANUFACTURER & MODEL	DESCRIPTION	ELECTRICAL (VAC–Ph–Hz)	WEIGHT (LBS)
CU 1	MITSUBISHI PUY–A24NHA7–BS, TRANE, OR EQUAL	CONDENSING UNIT R–410A REFRIGERANT	208–1–60 25 A	200
FC 1	MITSUBISHIPKA–A24KA7, TRANE, OR EQUAL	WALL–MOUNTED AIR CONDITIONER 24.0 MBH COOLING, 21.4 SEER, 12.2 EER AIRFLOW: 635–705–775 CFM		50
EF 1	GREENHECK G–103–VG/4/A, COOK, OR EQUAL	EXHAUST FAN, ROOF MOUNTED 910 CFM AT 0.25" ESP PROVIDE WITH ROOF CURB, BACK–DRAFT DAMPER AND ALL ACCESSORIES.	120–1–60 1/4 HP 1725 RPM	100
EF 2	GREENHECK G–097–VG/4/A, COOK, OR EQUAL	EXHAUST FAN, ROOF MOUNTED 50 CFM AT 0.25" ESP PROVIDE WITH ROOF CURB, BACK–DRAFT DAMPER AND ALL ACCESSORIES.	120–1–60 1/4 HP 1725 RPM	100
EF 3	GREENHECK G–097–VG/4/A, COOK, OR EQUAL	EXHAUST FAN, ROOF MOUNTED 140 CFM AT 0.25" ESP PROVIDE WITH ROOF CURB, BACK–DRAFT DAMPER AND ALL ACCESSORIES.	120–1–60 1/4 HP 1725 RPM	100
EF 4	GREENHECK G–099–VG/4/A, COOK, OR EQUAL	EXHAUST FAN, ROOF MOUNTED 700 CFM AT 0.25" ESP PROVIDE WITH ROOF CURB, BACK–DRAFT DAMPER AND ALL ACCESSORIES.	120–1–60 1/4 HP 1725 RPM	100
EF 5	GREENHECK G–099–VG/4/A, COOK, OR EQUAL	EXHAUST FAN, ROOF MOUNTED 480 CFM AT 0.25" ESP PROVIDE WITH ROOF CURB, BACK–DRAFT DAMPER AND ALL ACCESSORIES.	120–1–60 1/4 HP 1725 RPM	100
FSD 1	RUSKIN FSDR25, GREENHECK, OR EQUAL	FIRE SMOKE DAMPER, 6", 20–GAUGE, 1.5 HRS FIRE RATING, CLASS I LEAKAGE, 3,000 FPM MAXIMUM VELOCITY, 4" WG MAXIMUM PRESSURE, 450°F MAXIMUM TEMPERATURE. CSFM #3225–245:107 (FIRE DAMPER LISTING) CSFM #3230–245:108 (SMOKE DAMPER LISTING) COMPLETE WITH: ACTUATOR AND ALL ACCESSORIES.	24–1–60	100

3 MECHANICAL EQUIPMENT SCHEDULE

MARK	MANUFACTURER & MODEL	DESCRIPTION	ELECTRICAL (VAC–Ph–Hz)	WEIGHT (LBS)
AC 4	TRANE YZC060E3, CARRIER, OR EQUAL	PACKAGED ROOFTOP AIR CONDITIONING UNIT, VARIABLE SPEED SCROLL COMPRESSOR 2,400 CFM @ 0.8" ESP W/ 400 CFM OSA COOLING PERFORMANCE: 62.16 MBH TOTAL, 50.26 MBH SENSIBLE AT 80°F EDB, 67°F EWB, 95°F AMBIENT, 12.9 EER/19.6 SEER, R–410A HEATING PERFORMANCE: 130 MBH (HIGH) INPUT 104.0 MBH (HIGH) OUTPUT 80% AFUE, NATURAL GAS COMPLETE WITH: SEACOAST PROTECTION, ROOF CURB, FACTORY SHALL PROVIDE ECONOMIZER, DRY BULB 0–100% WITH BAROMETRIC RELIEF, ECONOMIZER DAMPER ACTUATOR TO BE CONTROLLED DIRECTLY FROM THE DDC SYSTEM, SMOKE DUCT DETECTOR IN MAIN SUPPLY DUCT FOR SYSTEM SHUTOFF UPON SMOKE DETECTION PER CMC SECTION 608.1 AND CFC SECTION 907.4, SMOKE DETECTOR SHUTOFF SHALL ACTIVATE BUILDING FIRE ALARM SYSTEM AND SEND SIGNAL TO EMS. CSFM #3240–1004:105 (SMOKE DUCT DETECTOR)	208–3–60 MCA 28 MFS/MCB 40 INDOOR FAN: 1.0 HP OUTDOOR FAN: 0.5 HP 1,100 RPM	1,000
AC 5	TRANE YZC036E3, CARRIER, OR EQUAL	PACKAGED ROOFTOP AIR CONDITIONING UNIT, VARIABLE SPEED SCROLL COMPRESSOR 1,460 CFM @ 0.6" ESP W/ 1,370 CFM OSA 150 CFM DEMAND CONTROL VENTILATION (DCV) MIN. OSA 110 CFM OCCUPANT SENSOR CONTROL VENTILATION MIN. OSA COOLING PERFORMANCE: 37.46 MBH TOTAL, 30.20 MBH SENSIBLE AT 80°F EDB, 67°F EWB, 95°F AMBIENT, 13.0 EER/20.1 SEER, R–410A HEATING PERFORMANCE: 100 MBH (HIGH) INPUT 80 MBH (HIGH) OUTPUT 78% AFUE, NATURAL GAS COMPLETE WITH: SEACOAST PROTECTION, ROOF CURB, FACTORY SHALL PROVIDE ECONOMIZER, DRY BULB 0–100% WITH POWER EXHAUSTER, ECONOMIZER DAMPER ACTUATOR TO BE CONTROLLED DIRECTLY FROM THE DDC SYSTEM.	208–3–60 MCA 14 MFS/MCB 20 INDOOR FAN: 0.75 HP OUTDOOR FAN: 0.33 HP 1,100 RPM	900
AC 6	TRANE YZC036E3, CARRIER, OR EQUAL	PACKAGED ROOFTOP AIR CONDITIONING UNIT, VARIABLE SPEED SCROLL COMPRESSOR 1,245 CFM @ 0.6" ESP W/ 545 CFM OSA 110 CFM DEMAND CONTROL VENTILATION (DCV) MIN. OSA COOLING PERFORMANCE: 35.89 MBH TOTAL, 27.37 MBH SENSIBLE AT 80°F EDB, 67°F EWB, 95°F AMBIENT, 13.0 EER/20.1 SEER, R–410A HEATING PERFORMANCE: 100 MBH (HIGH) INPUT 80 MBH (HIGH) OUTPUT 78% AFUE, NATURAL GAS COMPLETE WITH: SEACOAST PROTECTION, ROOF CURB, FACTORY SHALL PROVIDE ECONOMIZER, DRY BULD 0–100% WITH BAROMETRIC RELIEF, ECONOMIZER DAMPER ACTUATOR TO BE CONTROLLED DIRECTLY FROM THE DDC SYSTEM.	208–3–60 INDOOR FAN: 0.75 HP OUTDOOR FAN: 0.33 HP 1,100 RPM	900

2 MECHANICAL EQUIPMENT SCHEDULE

MARK	MANUFACTURER & MODEL	DESCRIPTION	ELECTRICAL (VAC–Ph–Hz)	WEIGHT (LBS)
AC 1	TRANE YZC036E3, CARRIER, OR EQUAL	PACKAGED ROOFTOP AIR CONDITIONING UNIT, VARIABLE SPEED SCROLL COMPRESSOR 1,350 CFM @ 0.6" ESP W/ 350 CFM OSA 40 CFM DEMAND CONTROL VENTILATION (DCV) MIN. OSA 120 CFM OCCUPANT SENSOR CONTROL VENTILATION MIN. OSA COOLING PERFORMANCE: 37.14 MBH TOTAL, 29.45 MBH SENSIBLE AT 80°F EDB, 67°F EWB, 95°F AMBIENT, 13.0 EER/20.1 SEER, R–410A HEATING PERFORMANCE: 100 MBH (HIGH) INPUT 80 MBH (HIGH) OUTPUT 78% AFUE, NATURAL GAS COMPLETE WITH: SEACOAST PROTECTION, ROOF CURB, FACTORY SHALL PROVIDE ECONOMIZER, DRY BULB 0–100% WITH POWER EXHAUSTER, ECONOMIZER DAMPER ACTUATOR TO BE CONTROLLED DIRECTLY FROM THE DDC SYSTEM ALONG WITH THE BAROMETRIC RELIEF DAMPER.	208–3–60 MCA 14 MFS/MCB 20 INDOOR FAN: 0.75 HP OUTDOOR FAN: 0.33 HP 1,100 RPM	900
AC 2	TRANE YZC090F3, CARRIER, OR EQUAL	PACKAGED ROOFTOP AIR CONDITIONING UNIT, VARIABLE SPEED SCROLL COMPRESSOR, 3,600 CFM @ 0.6" ESP W/ 1,400 CFM OSA 1,000 CFM DEMAND CONTROL VENTILATION (DCV) MIN. OSA COOLING PERFORMANCE: 94.10 MBH TOTAL, 82.20 MBH SENSIBLE AT 80°F EDB, 67°F EWB, 95°F AMBIENT, 12.8 EER/22.4 IEER, R–410A HEATING PERFORMANCE: 200 MBH (MODULATING) INPUT 162 MBH (MODULATING) OUTPUT 80% AFUE, NATURAL GAS COMPLETE WITH: SEACOAST PROTECTION, ROOF CURB, FACTORY SHALL PROVIDE ECONOMIZER, DRY BULB 0–100% WITH POWER EXHAUSTER, ECONOMIZER DAMPER ACTUATOR TO BE CONTROLLED DIRECTLY FROM THE DDC SYSTEM, SMOKE DUCT DETECTOR IN MAIN SUPPLY DUCT FOR SYSTEM SHUTOFF UPON SMOKE DETECTION PER CMC SECTION 608.1 AND CFC SECTION 907.4, SMOKE DETECTOR SHUTOFF SHALL ACTIVATE BUILDING FIRE ALARM SYSTEM AND SEND SIGNAL TO EMS. CSFM #3240–1004:105 (SMOKE DUCT DETECTOR)	208–3–60 MCA 40 MFS/MCB 60 INDOOR FAN: 1.0 HP OUTDOOR FAN: 0.75 HP 1,200 RPM	1,200
AC 3	TRANE YZC090F3, CARRIER, OR EQUAL	PACKAGED ROOFTOP AIR CONDITIONING UNIT, VARIABLE SPEED SCROLL COMPRESSOR, 3,300 CFM @ 0.6" ESP W/ 2,200 CFM OSA 1,610 CFM DEMAND CONTROL VENTILATION (DCV) MIN. OSA COOLING PERFORMANCE: 93.40 MBH TOTAL, 78.00 MBH SENSIBLE AT 80°F EDB, 67°F EWB, 95°F AMBIENT, 3,300 CFM, 12.8 EER/22.4 IEER, R–410A HEATING PERFORMANCE: 200 MBH (MODULATING) INPUT 162 MBH (MODULATING) OUTPUT 81% AFUE, NATURAL GAS COMPLETE WITH: SEACOAST PROTECTION, ROOF CURB, FACTORY SHALL PROVIDE ECONOMIZER, DRY BULB 0–100% WITH POWER EXHAUSTER, ECONOMIZER DAMPER ACTUATOR TO BE CONTROLLED DIRECTLY FROM THE DDC SYSTEM, SMOKE DUCT DETECTOR IN MAIN SUPPLY DUCT FOR SYSTEM SHUTOFF UPON SMOKE DETECTION PER CMC SECTION 608.1 AND CFC SECTION 907.4, SMOKE DETECTOR SHUTOFF SHALL ACTIVATE BUILDING FIRE ALARM SYSTEM AND SEND SIGNAL TO EMS. CSFM #3240–1004:105 (SMOKE DUCT DETECTOR)	208–3–60 MCA 40 MFS/MCB 60 INDOOR FAN: 1.0 HP OUTDOOR FAN: 0.75 HP 1,200 RPM	1,200

1 MECHANICAL EQUIPMENT SCHEDULE

IDENTIFICATION STAMP
DIV. OF THE STATE ARCHITECT
APP: 03-121324 INC: A
REVIEWED FOR
SS ☐ FLS ☐ ACS ☑
DATE: 09/14/2022

OFFICE OF THE STATE FIRE MARSHAL
APPROVED FIRE AND PANIC ONLY
09/07/22
21-0233
Approval of this plan does not authorize or approve any omission or deviation from applicable regulations. Final approval is subject to field inspection. One set of approved plans shall be available on the project site at all times.

DGS GENERAL SERVICES

Department of General Services
Architecture & Engineering Sections
State of California
Real Estate Services Division
Project Management & Development Branch
707 Third Street, Suite 4-105
West Sacramento, California 95605

REGISTERED PROFESSIONAL ENGINEER
MATTHEW TODD MILES
No. M29425
MECHANICAL
STATE OF CALIFORNIA
7/12/2022

DMV
State of California
Department of Motor Vehicles

Issue		
No.	Date	Description
1	9/2/22	

Project
SANTA MARIA FIELD OFFICE REPLACEMENT
2770 SANTA MARIA WAY
SANTA MARIA, CA 93455
SANTA BARBARA COUNTY
DEPT OF MOTOR VEHICLES

Supervisor	Designed	Drawn
M.MILES	S.HANNA	S.HANNA

DSA App No. 03-121324
SFM Permit No. 21-S-0233-CP-ER

Sheet Title
MECHANICAL SCHEDULES

Project Number
DGS000000140725

Reference North
Sheet Scale NONE
Sheet Number M021

Copyright © 2022 California Department of General Services - Real Estate Services Division

CAD File: X:\Projects\14xxxx\140725\DWG\PLTM021.dwg Plot Date: Jul 04, 2022 - 11:54pm Plotted by: I7-4770K

RELATIVE BORDER SCALE IN INCHES 0 1 2 3

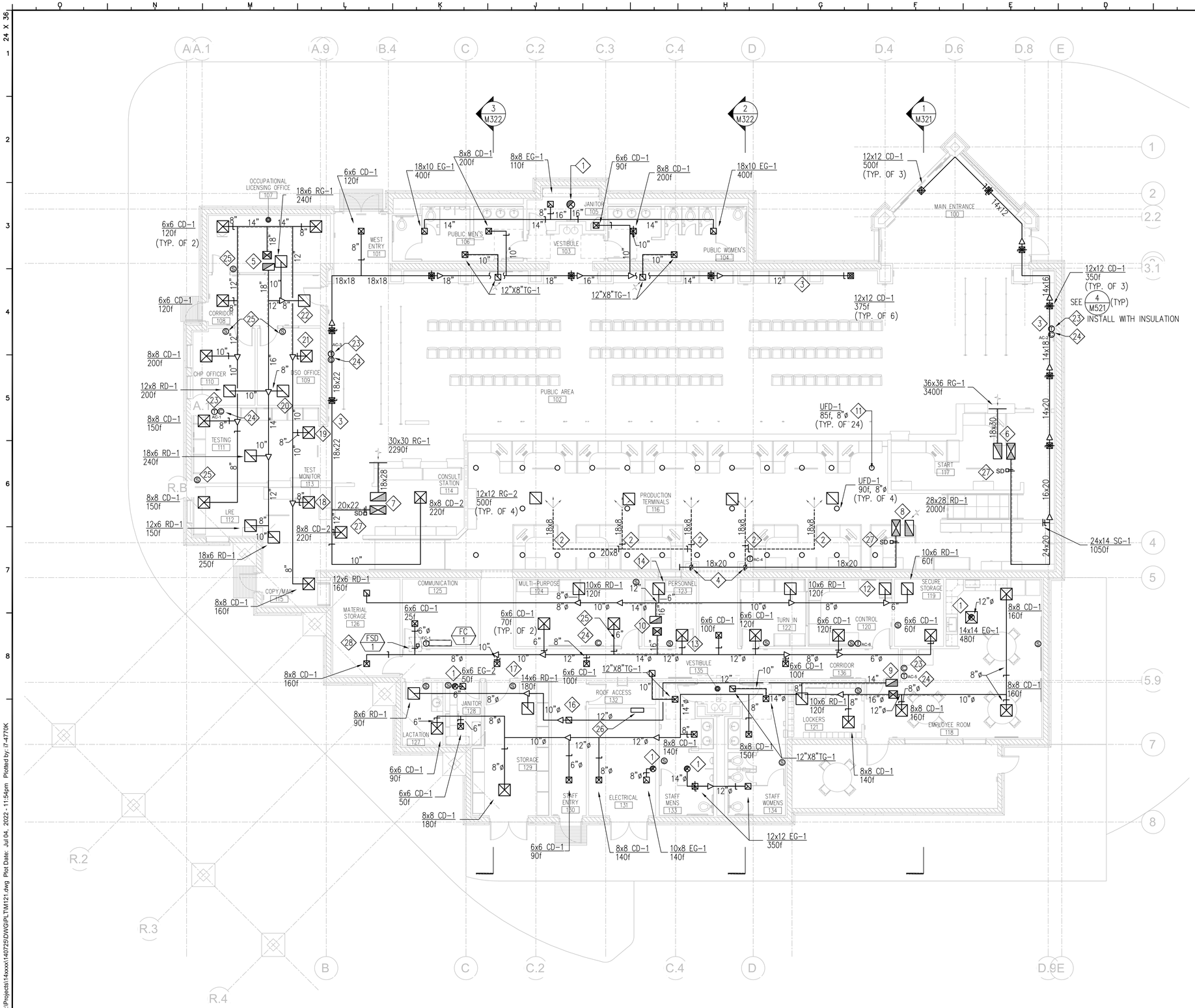

1 DUCT RISER TO EXHAUST FAN ON ROOF.

2 DUCT BELOW RAISED FLOOR.

3 DUCT IN SOFFIT.

4 20x12 DUCT DROP IN DUCT CHASE.

5 FROM AC-1:
16x14 SUPPLY DROP, 16x16 RETURN DROP

6 FROM AC-2:
24x20 SUPPLY DROP, 18x30 RETURN DROP

7 FROM AC-3:
20x22 SUPPLY DROP, 18x28 RETURN DROP

8 FROM AC-4:
18x20 SUPPLY DROP, OPEN RETURN

9 FROM AC-5:
18x16 SUPPLY DROP, 14x24 RETURN DROP

10 FROM AC-6:
18x16 SUPPLY DROP, 14x24 RETURN DROP

11 FLOOR DIFFUSER. LOCATIONS SHOWN ARE APPROXIMATE. COORDINATE WITH THE STATE FOR FINAL LOCATIONS.

12 10x6 RG-1 120f

13 8x8 CD-1 120f

14 10x6 RG-1 120f

15 NOT USED

16 8x6 RG-1 90f

17 8x8 CD-1 200f

18 6x6 CD-1 90f

19 8x8 CD-1 120f

20 10x6 RG-1 120f

21 8x8 CD-1 120f

22 10x6 RG-1 120f

23 ZONE TEMPERATURE SENSOR LOCATION

24 ZONE CO2 SENSOR LOCATION.

25 O.C.C SENSOR LOCATION. SEE ELEC. DWGS FOR MORE INFO

26 TCP-1 & TCP-2 LOCATION. MOUNT TOP OF PANELS @ 60" ABOVE FINISHED FLOOR.

27 DUCT SMOKE DETECTOR LOCATION SEE SHEET M5.2 AND ELECTRICAL DRAWING FOR WIRING DETAILS.

28 COMBINATION FIRE SMOKE DAMPER SEE SHEET M521/6 AND FA SHEETS FOR MORE INFORMATION

KEY NOTES

1. MOUNT TOP OF SENSORS AT 48" ABOVE FINISHED FLOOR. ROUTE ALL CONTROL WIRING IN CONDUIT AND DROP IN WALLS. NO EXPOSED WIRE OR WIRE MOLD.
2. BALANCE SUPPLY/RETURN/EXHAUST DIFFUSERS/GRILLES TO PROVIDE AIR QUANTITIES INDICATED ON THIS PLAN.
3. CO2 SENSOR AT ZONE 1 SHALL CONTROL AC-1.
4. CO2 SENSOR AT ZONE 2 SHALL CONTROL AC-2.
5. CO2 SENSOR AT ZONE 3 SHALL CONTROL AC-3.
6. CO2 SENSOR AT ZONE 5 SHALL CONTROL AC-5.
7. CO2 SENSOR AT ZONE 6 SHALL CONTROL AC-6.
8. INSTALL FLEX DUCT AS NECESSARY TO CONNECT DUCTWORK AIR OUTLETS. SEE DETAILS AND SPECS FOR MORE INFORMATION.

SHEET NOTES

1 MECHANICAL FLOOR PLAN 1/8"=1'-0"

IDENTIFICATION STAMP
DIV. OF THE STATE ARCHITECT
APP: 03-121324 INC:
REVIEWED FOR
SS ☐ FLS ☐ ACS ☑
DATE: 09/14/2022

OFFICE OF THE STATE FIRE MARSHAL
APPROVED FIRE AND PANIC ONLY
09/07/22
21-0233
Approval of this plan does not authorize or approve any omission or deviation from applicable regulations. Final approval is subject to field inspection. One set of approved plans shall be available on the project site at all times.

DGS GENERAL SERVICES
Department of General Services
Architecture & Engineering Sections
State of California
Real Estate Services Division
Project Management & Development Branch
707 Third Street, Suite 4-105
West Sacramento, California 95605

REGISTERED PROFESSIONAL ENGINEER
MATTHEW TODD MILES
No. M29425
MECHANICAL
STATE OF CALIFORNIA
7/12/2022

DMV
State of California
Department of Motor Vehicles

Issue		
No.	Date	Description
1	9/2/22	

Project
SANTA MARIA FIELD OFFICE REPLACEMENT
2770 SANTA MARIA WAY
SANTA MARIA, CA 93455
SANTA BARBARA COUNTY

DEPT OF MOTOR VEHICLES

Supervisor	Designed	Drawn
M.MILES	S.HANNA	S.HANNA

DSA App No.	SFM Permit No.
03-121324	21-S-0233-CP-ER

Sheet Title
MECHANICAL FLOOR PLAN

Project Number
DGS000000140725

Reference North | Sheet Scale 1/8" = 1'-0" | Sheet Number M121

Copyright © 2022, California Department of General Services - Real Estate Services Division

CAD File: X:\Projects\14xxxx\140725\DWG\PLTM121.dwg Plot Date: Jul 04, 2022 - 11:54pm Plotted by: I7-4770K

RELATIVE BORDER SCALE IN INCHES 0 1 2 3

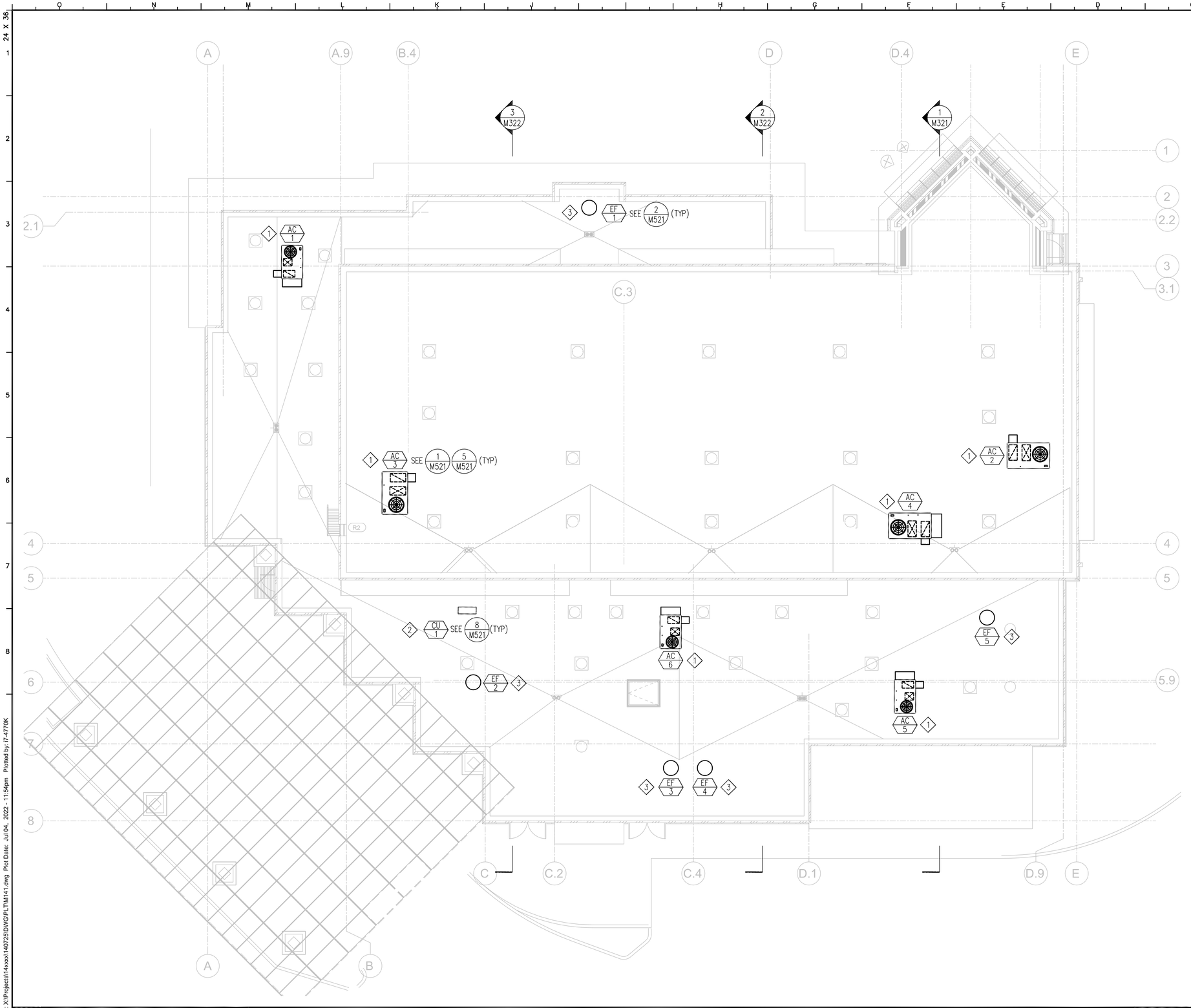

1. FURNISH AND INSTALL ROOFTOP PACKAGED HVAC UNIT ON ROOF CURB. UNIT SHALL BE LEVELED PER MANUFACTURER RECOMMENDATION. COORDINATE WITH THE STATE FOR FINAL LOCATIONS.
2. FURNISH AND INSTALL SPLIT PACKAGED HVAC COOLING ONLY UNIT ON CURB. UNIT SHALL BE LEVELED PER MANUFACTURER RECOMMENDATION
3. INSTALL EXHAUST FANS ON ROOF CURB. COMPLETE WITH BACK DRAFT DAMPERS AND SCREENS, CONNECT TO DUCT DROPS. UNIT SHALL BE LEVELED PER MANUFACTURER RECOMMENDATION.

KEY NOTES

1 MECHANICAL ROOF PLAN — 1/8"=1'-0"

IDENTIFICATION STAMP
DIV. OF THE STATE ARCHITECT
APP: 03-121324 INC:
REVIEWED FOR
SS ☐ FLS ☐ ACS ☑
DATE: 09/14/2022

OFFICE OF THE STATE FIRE MARSHAL
APPROVED FIRE AND PANIC ONLY
09/07/22
21-0233
Approval of this plan does not authorize or approve any omission or deviation from applicable regulations. Final approval is subject to field inspection. One set of approved plans shall be available on the project site at all times.

DGS GENERAL SERVICES

Department of General Services
Architecture & Engineering Sections
State of California
Real Estate Services Division
Project Management & Development Branch
707 Third Street, Suite 4-105
West Sacramento, California 95605

REGISTERED PROFESSIONAL ENGINEER
MATTHEW TODD MILES
No. M29425
MECHANICAL
STATE OF CALIFORNIA
7/12/2022

DMV
State of California
Department of Motor Vehicles

Issue		
No.	Date	Description
1	9/2/22	

Project
SANTA MARIA FIELD OFFICE REPLACEMENT
2770 SANTA MARIA WAY
SANTA MARIA, CA 93455
SANTA BARBARA COUNTY

DEPT OF MOTOR VEHICLES

Supervisor	Designed	Drawn
M.MILES	S.HANNA	S.HANNA

DSA App No.	SFM Permit No.
03-121324	21-S-0233-CP-ER

Sheet Title
MECHANICAL
ROOR PLAN

Project Number
DGS000000140725

Reference North

Sheet Scale
1/8" = 1'-0"

Sheet Number
M141

Copyright © 2022, California Department of General Services - Real Estate Services Division

RELATIVE BORDER SCALE IN INCHES 0 1 2 3

CAD File: X:\Projects\14xxxx\140725\DWG\PLTM141.dwg Plot Date: Jul 04, 2022 - 11:54pm Plotted by: i7-4770K

1. DUCT IN SOFFIT.
2. 20x12 DUCT DROP IN DUCT CHASE.
3. DUCT BELOW RAISED FLOOR.
4. DUCT RISER TO EXHAUST FAN ON ROOF.
5. FLOOR DIFFUSER. LOCATIONS SHOWN ARE APPROXIMATE. COORDINATE WITH THE STATE FOR FINAL LOCATIONS.
6. DUCT BRANCH BELOW RAISED FLOOR.

1 KEY NOTES

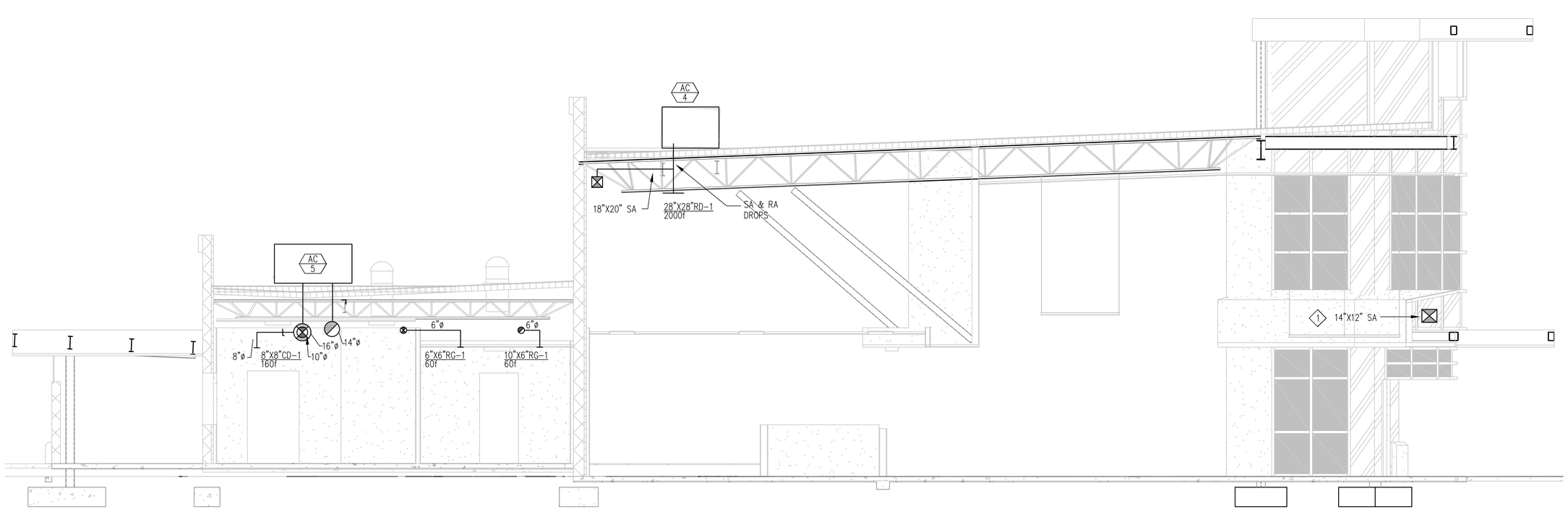

1 MECHANICAL SECTION — 1/4"=1'-0"

IDENTIFICATION STAMP
DIV. OF THE STATE ARCHITECT
APP: 03-121324 INC:
REVIEWED FOR
SS ☐ FLS ☐ ACS ☑
DATE: 09/14/2022

OFFICE OF THE STATE FIRE MARSHAL
APPROVED FIRE AND PANIC ONLY
09/07/22
21-0233
Approval of this plan does not authorize or approve any omission or deviation from applicable regulations. Final approval is subject to field inspection. One set of approved plans shall be available on the project site at all times.

GENERAL SERVICES
Department of General Services
Architecture & Engineering Sections
State of California
Real Estate Services Division
Project Management & Development Branch
707 Third Street, Suite 4-105
West Sacramento, California 95605

REGISTERED PROFESSIONAL ENGINEER
MATTHEW TODD MILES
No. M29425
MECHANICAL
STATE OF CALIFORNIA
7/12/2022

DMV
State of California
Department of Motor Vehicles

Issue		
No.	Date	Description
1	9/2/22	

Project
SANTA MARIA FIELD OFFICE REPLACEMENT
2770 SANTA MARIA WAY
SANTA MARIA, CA 93455
SANTA BARBARA COUNTY

DEPT OF MOTOR VEHICLES

Supervisor	Designed	Drawn
M.MILES	S.HANNA	S.HANNA

DSA App No.	SFM Permit No.
03-121324	21-S-0233-CP-ER

Sheet Title
MECHANICAL SECTIONS

Project Number
DGS000000140725

Reference North | Sheet Scale 1/4" = 1'-0" | Sheet Number M321

Copyright © 2022, California Department of General Services - Real Estate Services Division

CAD File: X:\Projects\14xxxx\140725\DWG\PLTM321.dwg Plot Date: Jul 04, 2022 - 11:54pm Plotted by: I7-4770K

RELATIVE BORDER SCALE IN INCHES 0 1 2 3

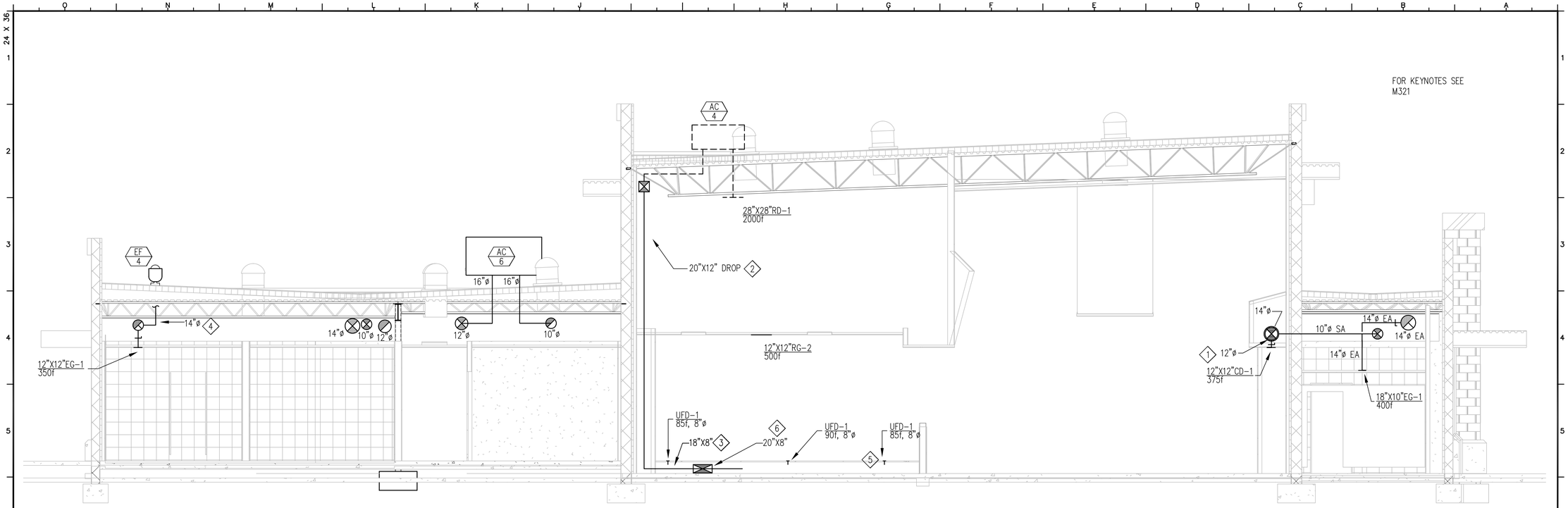

2 MECHANICAL SECTION — 1/4"=1'-0"

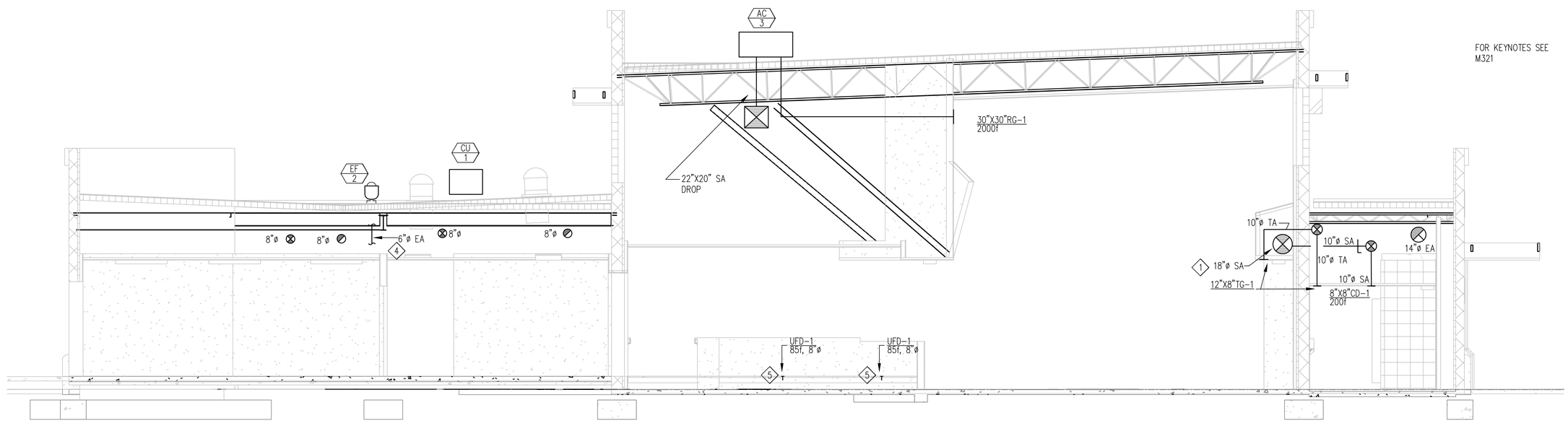

3 MECHANICAL SECTION — 1/4"=1'-0"

RELATIVE BORDER SCALE IN INCHES 0 1 2 3

IDENTIFICATION STAMP
DIV. OF THE STATE ARCHITECT
APP: 03-121324 INC:
REVIEWED FOR
SS ☐ FLS ☐ ACS ☑
DATE: 09/14/2022

OFFICE OF THE STATE FIRE MARSHAL
APPROVED FIRE AND PANIC ONLY
09/07/22
21-0233
Approval of this plan does not authorize or approve any omission or deviation from applicable regulations. Final approval is subject to field inspection. One set of approved plans shall be available on the project site at all times.

DGS GENERAL SERVICES

Department of General Services
Architecture & Engineering Sections
State of California
Real Estate Services Division
Project Management & Development Branch
707 Third Street, Suite 4-105
West Sacramento, California 95605

REGISTERED PROFESSIONAL ENGINEER
MATTHEW TODD MILES
No. M29425
MECHANICAL
STATE OF CALIFORNIA
7/12/2022

DMV
State of California
Department of Motor Vehicles

Issue

No.	Date	Description
1	9/2/22	

Project
SANTA MARIA FIELD OFFICE REPLACEMENT

2770 SANTA MARIA WAY
SANTA MARIA, CA 93455
SANTA BARBARA COUNTY

DEPT OF MOTOR VEHICLES

Supervisor	Designed	Drawn
M.MILES	S.HANNA	S.HANNA

DSA App No.	SFM Permit No.
03-121324	21-S-0233-CP-ER

Sheet Title
MECHANICAL SECTIONS

Project Number
DGS000000140725

Reference North

Sheet Scale
1/8" = 1'-0"

Sheet Number
M322

Copyright © 2022, California Department of General Services - Real Estate Services Division

CAD File: X:\Projects\14xxxx\140725\DWG\PLTM322.dwg Plot Date: Jul 04, 2022 - 11:55pm Plotted by: I7-4770K

24 X 36

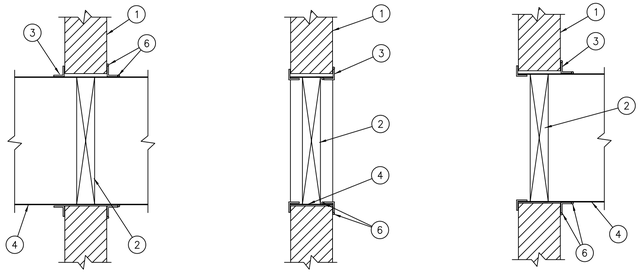

FIGURE 1

FIGURE 2

FIGURE 3

ITEM.	DESCRIPTION
1.	FIRE RATED WALL OR FLOOR
2.	DAMPER
3.	MOUNTING ANGLES
4.	SLEEVE
5.	RETAINING PLATE
6.	SEALANT

Fill Material –Fire stop caulk applied to a minimum 5/8" (16) thickness for 1½ hour dampers or 1" (25) for 3 hour dampers within the annular space and flush with both surfaces of the wall or bottom surface of floor. If the damper/sleeve assembly comes into contact with the wall or floor, a minimum 3/8" (10) diameter bead shall be applied to the interface between the sleeve and contact surface.

Hilti Corporation – FS-One, CP606
3M – #M-CP 25WB+
Speci fied Technologies, Inc. – SpecSeal®Series SSS or LCI
John Manville International, Inc. – FiretempTM CI
Rectorseal – Metacaulk 1000, Metacaulk 350i, Biostop 500+ or Biostop 350

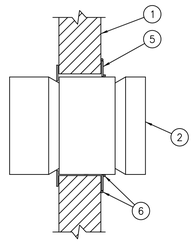

FIGURE 4

M15_FN08

6 WALL SEALANT — NO SCALE

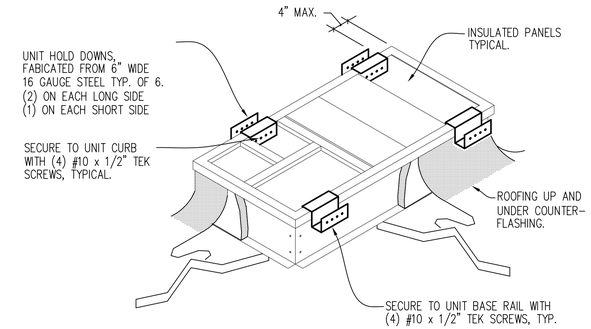

M15_PS04

5 HVAC HOLD DOWN SUPPORT — NO SCALE

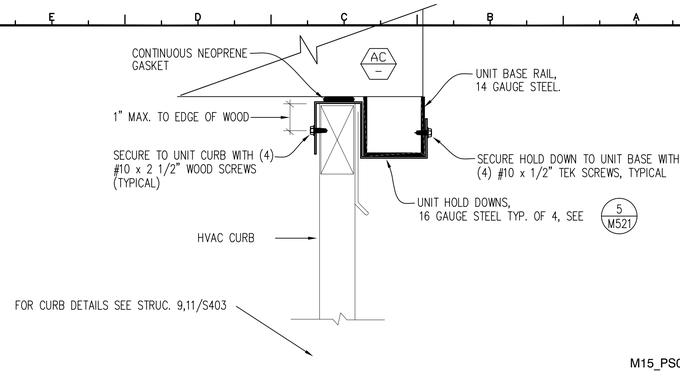

M15_PS04

1 HVAC UNIT SUPPORT ON ROOF CURB — NO SCALE

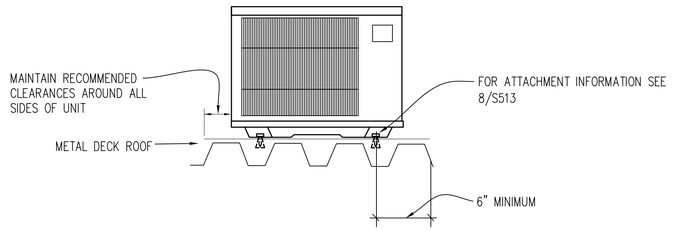

NOTE: MAINTAIN ALL MANUFACTURER'S RECOMMENDED CLEARANCES AROUND CONDENSING UNIT.

M15_HS07a

8 CONDENSING UNIT SUPPORT — NO SCALE

FOLLOW MANUFACTURER INSTALLATION MANUAL FOR FULL INSTALLATION AND VIBRATION DAMPING

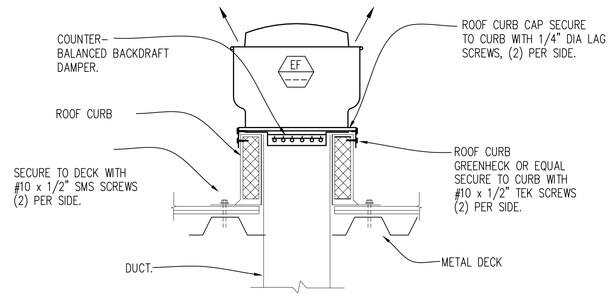

M15_AC02

2 EXHAUST FAN SUPPORT ON ROOF — NO SCALE

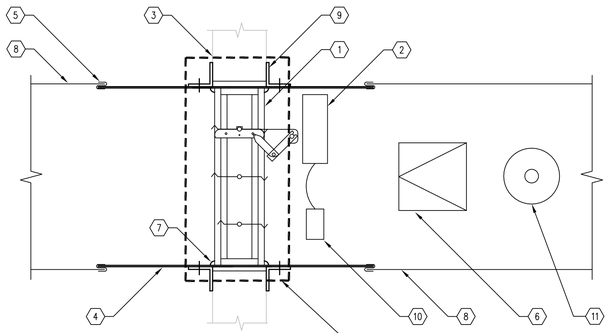

VERTICAL INSTALLATION

ITEMS

1. FIRE SMOKE DAMPER
2. DAMPER ACTUATOR
3. WALL CONSTRUCTION (SEE ARCH)
4. SLEEVE
5. SLEEVE TO DUCT BREAK-AWAY CONNECTION
6. DUCT ACCESS DOOR, 8"X8" MINIMUM
7. CAULKING MATERIAL
8. DUCT, SIZE PER PLANS
9. RETAINING ANGLES
10. HEAT-ACTUATED RELEASE DEVICE AND TEST SWITCH
11. NO FLOW RATED SMOKE DETECTOR

NOTES

1. TYP. FIRE SMOKE DAMPER DETAIL (ACTUAL FILED CONDITION MAY VARY, FIELD VERIFICATION IS REQUIRED).
2. FIRE SMOKE DAMPERS SHALL BE CALIFORNIA STATE FIRE MARSHAL APPROVED AND INSTALLED STRICTLY PER MANUFACTURER'S PRINTED INSTRUCTIONS.
3. MANUFACTURER'S INSTALLATION INSTRUCTIONS SHALL BE MADE AVAILABLE TO THE INSPECTING AUTHORITIES.
4. PROVIDE RUSKIN FSDR25 (CSFM LISTING # 3235-0245:0128), NCA MANUFACTURING INC., OR EQUAL. SEE SPECIFICATIONS FOR ADDITIONAL INFORMATION.

M15_DM02

7 COMBINATION FIRE SMOKE DAMPER — NO SCALE

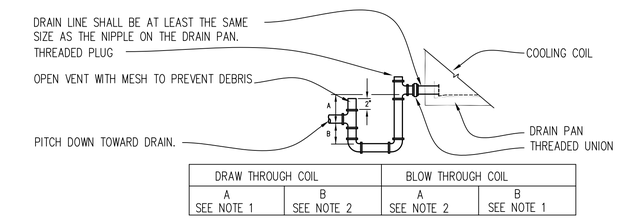

DRAW THROUGH COIL		BLOW THROUGH COIL	
A	B	A	B
SEE NOTE 1	SEE NOTE 2	SEE NOTE 2	SEE NOTE 1

NOTES:

1. MINIMUM DEPTH OF SEAL TO BE STATIC PRESSURE AT PAN PLUS 1/2".
2. 2" MINIMUM.
3. THIS DETAIL IS ALSO APPLICABLE TO SECONDARY CONDENSATE SYSTEM.

M15_PS04

3 CONDENSATE DRAIN TRAP — NO SCALE

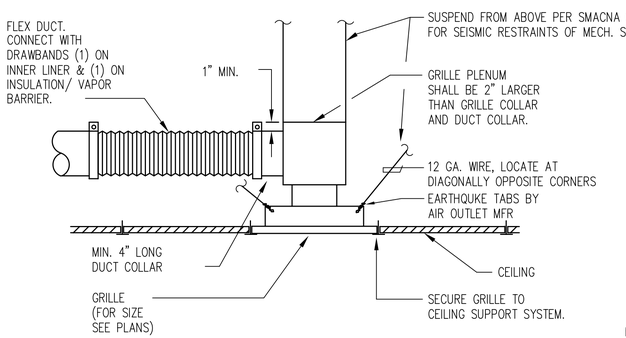

M15_DF04

4 GRILLE MOUNTING DETAIL — NO SCALE

IDENTIFICATION STAMP
DIV. OF THE STATE ARCHITECT
APP: 03-121324 INC: A
REVIEWED FOR
SS ☐ FLS ☐ ACS ☑
DATE: 09/14/2022

OFFICE OF THE STATE FIRE MARSHAL
APPROVED FIRE AND PANIC ONLY
09/07/22
21-0233
Approval of this plan does not authorize or approve any omission or deviation from applicable regulations. Final approval is subject to field inspection. One set of approved plans shall be available on the project site at all times.

DGS GENERAL SERVICES
Department of General Services
Architecture & Engineering Sections
State of California
Real Estate Services Division
Project Management & Development Branch
707 Third Street, Suite 4-105
West Sacramento, California 95605

REGISTERED PROFESSIONAL ENGINEER MATTHEW TODD MILES No. M29425 MECHANICAL STATE OF CALIFORNIA
7/12/2022

DMV
State of California
Department of Motor Vehicles

Issue

No.	Date	Description
1	9/2/22	

Project
SANTA MARIA FIELD OFFICE REPLACEMENT
2770 SANTA MARIA WAY
SANTA MARIA, CA 93455
SANTA BARBARA COUNTY

DEPT OF MOTOR VEHICLES

Supervisor	Designed	Drawn
M.MILES	S.HANNA	S.HANNA

DSA App No.	SFM Permit No.
03-121324	21-S-0233-CP-ER

Sheet Title
MECHANICAL DETAILS

Project Number
DGS000000140725

Reference North | Sheet Scale NONE | Sheet Number M521

Copyright © 2022, California Department of General Services - Real Estate Services Division

RELATIVE BORDER SCALE IN INCHES 0 1 2 3

CAD File: X:\Projects\14xxxx\140725\DWG\PLTM521.dwg Plot Date: Jul 04, 2022 - 11:55pm Plotted by: i7-4770K

GENERAL

1. THESE CONTROL DIAGRAMS ARE DIAGRAMMATICAL AND DO NOT DEPICT ALL CONTROL WIRES, RELAYS OR COMPONENTS OF A COMPLETE SYSTEM. IT IS THE RESPONSIBILITY OF THE TEMPERATURE CONTROLS CONTRACTOR TO PROVIDE A COMPLETE AND FUNCTIONAL CONTROL SYSTEM.

2. DIAGRAMS ARE TYPICAL FOR EACH SYSTEM OCCURRENCE. SEE PLANS FOR LOCATIONS AND QUANTITIES.

3. PROVIDE DEDICATED POWER CIRCUITS TO CONTROLLERS AND OTHER DEVICES REQUIRING POWER.

4. FOR AIR CONDITIONING UNITS REQUIRING SMOKE DETECTOR PER CALIFORNIA MECHANICAL CODE 608.1, PROVIDE SMOKE DETECTOR IN THE MAIN SUPPLY DUCT FOR SYSTEM SHUTOFF. UPON DETECTION OF SMOKE, THE ASSOCIATED AIR CONDITIONING UNIT SHALL BE SHUTDOWN BY A FACTORY SUPPLIED DUCT SMOKE DETECTOR AND AN ALARM SHALL BE SENT TO THE BACTALK COMPUTER AND THE BUILDING FIRE ALARM PANEL.

5. THE HVAC OSA ECONOMIZER SYSTEM INCLUDES COMPONENTS FOR AN INTEGRATED FAULT DETECTION AND DIAGNOSTICS (FDD) SYSTEM IN ACCORDANCE WITH TITLE 24 SECTION 120.2(i). THE CONTROL SYSTEM SHALL BE PROGRAMMED TO COMPLY WITH 120.2(i).

6. DMV WILL PROVIDE DIRECT INTERNET CONNECTION. INTERNET CONNECTION SHALL BE SET UP TO ALLOW REMOTE ACCESS TO EMS CONTROL SYSTEM.

7. ALL CONTROLLED/MONITORED EQUIPMENT SHALL HAVE SYSTEM COLOR GRAPHICS DISPLAY ON THE COMPUTER MONTIOR. GRAPHICS SHALL INCLUDE THE FOLLOWING:

   - MAIN PAGE
   - BUILDING FLOOR PLAN SHOWING EQUIPMENT AND THERMOSTAT LOCATIONS WITH CORRESPONDING TEMPERATURES
   - TABLE SHOWING ALL SENSOR READINGS AND THE CORRESPONDING SETPOINTS
   - EQUIPMENT DIAGNOSTIC TABLE SHOWING EACH DEVICE'S SETPOINTS AND CURRENT OPERATING POSITION
   - SYSTEM 3-D GRAPHICS FOR EACH SYSTEM SHOWING ALL THE EQUIPMENT'S CURRENT STATUS, PROGRAMMED STATUS, ALARMS, AND OPERATING INFORMATION

DEMAND CONTROL VENTILATION (DCV)

1. AIR CONDITIONING UNITS (AC-1, 2, 3, 5 AND AC-6) OCCUPIED MINIMUM COOLING AIRFLOW SETPOINT SHALL BE REDUCED TO THE DCV MINIMUM SETPOINT VALUE INDICATED ON THE PLANS WHENEVER THE CORRESPONDING CO2 SENSOR IS REPORTING A VALUE LESS THAN 1,000 PPM. WHEN THE CO2 SENSOR REPORTS A VALUE GREATER THAN OR EQUAL TO 1,000 PPM, THE MINIMUM COOLING SETPOINT SHALL RETURN TO THE MINIMUM DESIGN VALUE.

2. FAILURE OF ANY CO2 SENSOR SHALL RESET THE SYSTEM MINIMUM AIRFLOW RATE TO DESIGN VALUES.

3. THE READING OF EACH CO2 SENSOR SHALL BE DISPLAYED AND RECORDED AT THE BUILDING AUTOMATION SYSTEM (BAS) FRONT END.

4. REQUIRED DEMAND CONTROL VENTILATION SYSTEM VENTILATION RATE REDUCTIONS ARE AS FOLLOWS:

UNIT	MIN. VENTILATION RATE	DCV OA REDUCTION
AC-1	350 CFM	310 CFM
AC-2	1,400 CFM	400 CFM
AC-3	2,200 CFM	590 CFM
AC-5	1,370 CFM	1,220 CFM
AC-6	545 CFM	435 CFM

2 CONTROL NOTES — NO SCALE

GENERAL:
THE ENERGY MANAGEMENT SYSTEM (EMS) SHALL CONSIST OF A SITE CONTROLLER AND PROGRAMMABLE UNITARY CONTROLLERS. THE ACM SHALL BE PROGRAMMED TO PROVIDE THE OPERATING SCHEDULES FOR EACH UNITARY CONTROLLER AS DESIGNATED BY THE DEPARTMENT OF MOTOR VEHICLES. THE TEMPERATURE CONTROL CONTRACTOR (TCC) SHALL PROVIDE COLOR GRAPHIC / PROGRAMMING SCREENS FOR ALL HVAC EQUIPMENT CONTROLLED UNDER THIS PROJECT

THE HVAC SYSTEM SHALL HAVE OPTIMUM START/STOP CONTROLS, NIGHT SETBACK CONTROL AND TIMED OVERRIDE. OCCUPIED, UNOCCUPIED AND HOLIDAY SCHEDULES SHALL BE PROGRAMMED PER FACILITY SCHEDULE, PER TITLE 24 SECTION 120.2(e).

THE ENERGY MANAGEMENT SYSTEM SHALL HAVE PREOCCUPANCY PURGE PROGRAMMED TO MEET THE REQUIREMENTS OF TITLE 24 SECTION 120.1(c) 2.

THE ENERGY MANAGEMENT SYSTEM SHALL HAVE AUTOMATIC DEMAND SHED CONTROL AS
DESCRIBED IN TITLE 24 SECTION 120.2(h).

THE ENERGY MANAGEMENT SYSTEM SHALL HAVE THE CAPABILITY TO RESPOND TO OPEN ADR 2.0B IN ACCORDANCE WITH TITLE 24 SECTION 110.12.

THE ENERGY MANAGEMENT SYSTEM SHALL HAVE OCCPANCY SENSOR VENTILATION CONTROL DEVICES AS REQUIRED BY TITLE 24 SECTION 120.2€3

DEMAND CONTROL VENTILATION PACKAGED AC UNITS (AC-1, 2, 3, 5 & 6):

DURING PERIODS OF OCCUPANCY, AS DETERMINED BY SCHEDULING OR OCCUPANT OVERRIDE, THE AC UNIT VLC CONTROLLER WILL ENABLE THE SUPPLY FAN, OPEN THE ECONOMIZER DAMPERS TO MINIMUM POSITION AND STAGE THE HEATING AND COOLING TO MAINTAIN ROOM SETPOINT. IF THE SUPPLY FAN IS COMMANDED "ON" AND STATUS IS NOT SEEN BY THE CURRENT SWITCH CONTACT CLOSURE, THEN AN ALARM SHALL BE GENERATED. TCC SHALL PROVIDE ALL ECONOMIZER CONTROLS FROM VLC CONTROLLER. AC UNIT MANUFACTURER SHALL PROVIDE ALL UNIT DAMPERS AND DAMPER ACTUATORS.

ECONOMIZER ALGORITHMS SHALL BE BASED UPON GLOBAL OUTSIDE AIR DRY BULB TEMPERATURE SENSOR AND SUPPLY AIR SENSOR. MINIMUM OUTSIDE AIR DAMPER POSITION SHALL BE DISPLAYED AND ADJUSTABLE FROM EACH DETAILED INDIVIDUAL UNIT CONTROL PANEL GRAPHIC. ECONOMIZER SHOULD BE OVERRIDE TO CLOSING POSITION FOR OUTSIDE AIR QUALITY.

OCCUPANT SENSOR VENTILATION CONTROL: THERE WILL BE AN OCCUANY SENSOR IN EVERY ROOM SERVED BY AN AIR CONDITIONING UNIT AND THE SPACE WILL NOT BE DEEMED EMPTY UNTIL ALL OCCPANCY SENSORS FOR THAT UNIT RESPOND WITH A NON-OCCUPIED SIGNAL TO THE DDC SYSTEM. WHEN ALL SPACES ARE DEEMED UNOCCUPIED 5 MINS (ADJ) THE OUTSIDE AIR CFM WILL BE REDUCED AND THE OCCUPIED HEATING AND COOLING SET POINTS WILL BE SPREAD 2 DEGREES UNTIL AT LEAST ONE OF THE SPACES SERVED BY AN AC UNIT IS OCCUPIED.

COOLING CONTROL:
ON A CALL FOR COOLING, THE VLC CONTROLLER WILL MODULATE THE ECONOMIZER DAMPERS TO OPERATE AS THE FIRST STAGE OF COOLING AS LONG AS THE OUTSIDE AIR TEMPERATURE IS BELOW THE ECONOMIZER AIR LOCKOUT TEMPERATURE SET AT 68℉ (ADJ.).

IF DURING ECONOMIZER OPERATION, THE VLC CANNOT MAINTAIN ROOM COOLING SETPOINT, AND THE ECONOMIZER HAS BEEN OPEN 100% FOR 5 MINUTES, THE VLC WILL STAGE THE DX COOLING IN CONJUNCTION WITH THE ECONOMIZER TO MAINTAIN ROOM COOLING SETPOINT AS LONG AS THE OUTSIDE AIR TEMPERATURE IS ABOVE THE COOLING LOCKOUT TEMPERATURE SET AT 60℉ (ADJ.). IF THE OUTSIDE AIR TEMPERATURE RISES ABOVE THE ECONOMIZER LOCKOUT TEMPERATURE THE VLC WILL CLOSE THE ECONOMIZER DAMPER TO MINIMUM POSITION AND STAGE THE DX COOLING TO MAINTAIN ROOM COOLING SETPOINT.

HEATING CONTROL:
ON A CALL FOR HEATING THE ECONOMIZER SHALL POSITION TO MINIMUM OSA AND THE GAS HEATING SHALL BE STAGED TO MAINTAIN ROOM HEATING SETPOINT AS LONG AS THE OUTSIDE AIR TEMPERATURE IS BELOW THE HEATING LOCKOUT TEMPERATURE SET AT 70℉ (ADJ.).

THE OUTSIDE AIR DAMPER WILL BE MODULATED CLOSED WHEN UNIT IS OFF.

PROVIDED FIRE MARSHALL APPROVED DUCT SMOKE DETECTOR WHERE LISTED. TCC WILL INTERLOCK DUCT SMOKE DETECTOR TO SHUTDOWN UNIT UPON DETECTION OF PRODUCTS OF COMBUSTION AND AN ALARM SHALL BE SENT TO THE BACTALK COMPUTER. A REMOTE AUDIO HORN AND LIGHT ALARM INDICATION SHALL ACTIVATE WHEN SMOKE IS DETECTED. THIS DEVICE IS NOT TO BE USED AS A LIFE SAFETY INDICATION. THE AUDIO HORN SHALL HAVE A SILENCE OVERRIDE.

CO2 CONTROL:
CO2 SETPOINT IS 600PPM ABOVE THE ASSUMED AMBIENT CO2 OF 400PPM. WHEN THE INTERIOR SPACE CO2 LEVEL EXCEEDS THE CO2 SETPOINT, THE OUTSIDE AIR ECONOMIZER DAMPER SHALL MODULATE TO THE DESIGN UPPER MINIMUM OUTSIDE AIR POSITION TO FLUSH THE EXCESS CO2 FROM THE SPACE. SEE AC UNIT SCHEDULES FOR DESIGN AND MINIMUM OUTSIDE AIR QUANTITIES.

PACKAGED AC UNITS (AC-5, 6):
DURING PERIODS OF OCCUPANCY, AS DETERMINED BY SCHEDULING OR OCCUPANT OVERRIDE, THE AC UNIT VLC CONTROLLER WILL ENABLE THE SUPPLY FAN, OPEN THE ECONOMIZER DAMPERS TO MINIMUM POSITION AND STAGE THE HEATING AND COOLING TO MAINTAIN ROOM SETPOINT. IF THE SUPPLY FAN IS COMMANDED "ON" AND STATUS IS NOT SEEN BY THE CURRENT SWITCH CONTACT CLOSURE, THEN AN ALARM SHALL BE GENERATED. TCC SHALL PROVIDE ALL ECONOMIZER CONTROLS FROM VLC CONTROLLER. AC UNIT MANUFACTURER SHALL PROVIDE ALL UNIT DAMPERS AND DAMPER ACTUATORS.

ECONOMIZER ALGORITHMS SHALL BE BASED UPON GLOBAL OUTSIDE AIR DRY BULB TEMPERATURE SENSOR AND SUPPLY AIR SENSOR. MINIMUM OUTSIDE AIR DAMPER POSITION SHALL BE DISPLAYED AND ADJUSTABLE FROM EACH DETAILED INDIVIDUAL UNIT CONTROL PANEL GRAPHIC. ECONOMIZER SHOULD BE OVERRIDE TO CLOSING POSITION FOR OUTSIDE AIR QUALITY

COOLING CONTROL:
ON A CALL FOR COOLING, THE VLC CONTROLLER WILL MODULATE THE ECONOMIZER DAMPERS TO OPERATE AS THE FIRST STAGE OF COOLING AS LONG AS THE OUTSIDE AIR TEMPERATURE IS BELOW THE ECONOMIZER AIR LOCKOUT TEMPERATURE SET AT 68℉ (ADJ.).

IF DURING ECONOMIZER OPERATION, THE VLC CANNOT MAINTAIN ROOM COOLING SETPOINT, AND THE ECONOMIZER HAS BEEN OPEN 100% FOR 5 MINUTES, THE VLC WILL STAGE THE DX COOLING IN CONJUNCTION WITH THE ECONOMIZER TO MAINTAIN ROOM COOLING SETPOINT AS LONG AS THE OUTSIDE AIR TEMPERATURE IS ABOVE THE COOLING LOCKOUT TEMPERATURE SET AT 60℉ (ADJ.). IF THE OUTSIDE AIR TEMPERATURE RISES ABOVE THE ECONOMIZER LOCKOUT TEMPERATURE THE VLC WILL CLOSE THE ECONOMIZER DAMPER TO MINIMUM POSITION AND STAGE THE DX COOLING TO MAINTAIN ROOM COOLING SETPOINT.

HEATING CONTROL:
ON A CALL FOR HEATING THE ECONOMIZER SHALL POSITION TO MINIMUM OSA AND THE GAS HEATING SHALL BE STAGED TO MAINTAIN ROOM HEATING SETPOINT AS LONG AS THE OUTSIDE AIR TEMPERATURE IS BELOW THE HEATING LOCKOUT TEMPERATURE SET AT 70℉ (ADJ.).

THE OUTSIDE AIR DAMPER WILL BE MODULATED CLOSED WHEN UNIT IS OF

EXHAUST FAN CONTROL
EF-1, THRU EF-5 SHALL OPERATE DURING SCHEDULED PERIODS.

EARLY OFF LIGHTS:
THE EARLY OFF LIGHTS WILL BE PROGRAMMED OFF AND ALLOWED TO COME ON BY A TIME SCHEDULE SET BY THE OWNER.

INTERIOR LIGHTING RELAY IS FOR FUTURE PROJECT.

INSTALL LAMINATED COPY OF AS-BUILT DRAWING IN PANEL

1 SEQUENCE OF OPERATION — NO SCALE

IDENTIFICATION STAMP
DIV. OF THE STATE ARCHITECT
APP: 03-121324 INC:
REVIEWED FOR
SS ☐ FLS ☐ ACS ☑
DATE: 09/14/2022

OFFICE OF THE STATE FIRE MARSHAL
APPROVED FIRE AND PANIC ONLY
09/07/22
21-0233
Approval of this plan does not authorize or approve any omission or deviation from applicable regulations. Final approval is subject to field inspection. One set of approved plans shall be available on the project site at all times.

DGS GENERAL SERVICES
Department of General Services
Architecture & Engineering Sections
State of California
Real Estate Services Division
Project Management & Development Branch
707 Third Street, Suite 4-105
West Sacramento, California 95605

REGISTERED PROFESSIONAL ENGINEER
MATTHEW TODD MILES
No. M29425
MECHANICAL
STATE OF CALIFORNIA
7/12/2022

DMV
State of California
Department of Motor Vehicles

Issue		
No.	Date	Description
1	9/2/22	

Project
SANTA MARIA FIELD OFFICE REPLACEMENT
2770 SANTA MARIA WAY
SANTA MARIA, CA 93455
SANTA BARBARA COUNTY

DEPT OF MOTOR VEHICLES

Supervisor	Designed	Drawn
M.MILES	S.HANNA	S.HANNA

DSA App No.	SFM Permit No.
03-121324	21-S-0233-CP-ER

Sheet Title
MECHANICAL CONTROLS S.O.O.

Project Number
DGS000000140725

Reference North | Sheet Scale: NONE | Sheet Number: M621

Copyright © 2022, California Department of General Services - Real Estate Services Division

CAD File: X:\Projects\14xxxx\140725\DWG\PLTM621 MECHANICAL CONTROLS .dwg Plot Date: Jul 04, 2022 - 11:55pm Plotted by: i7-4790K

RELATIVE BORDER SCALE IN INCHES 0 1 2 3

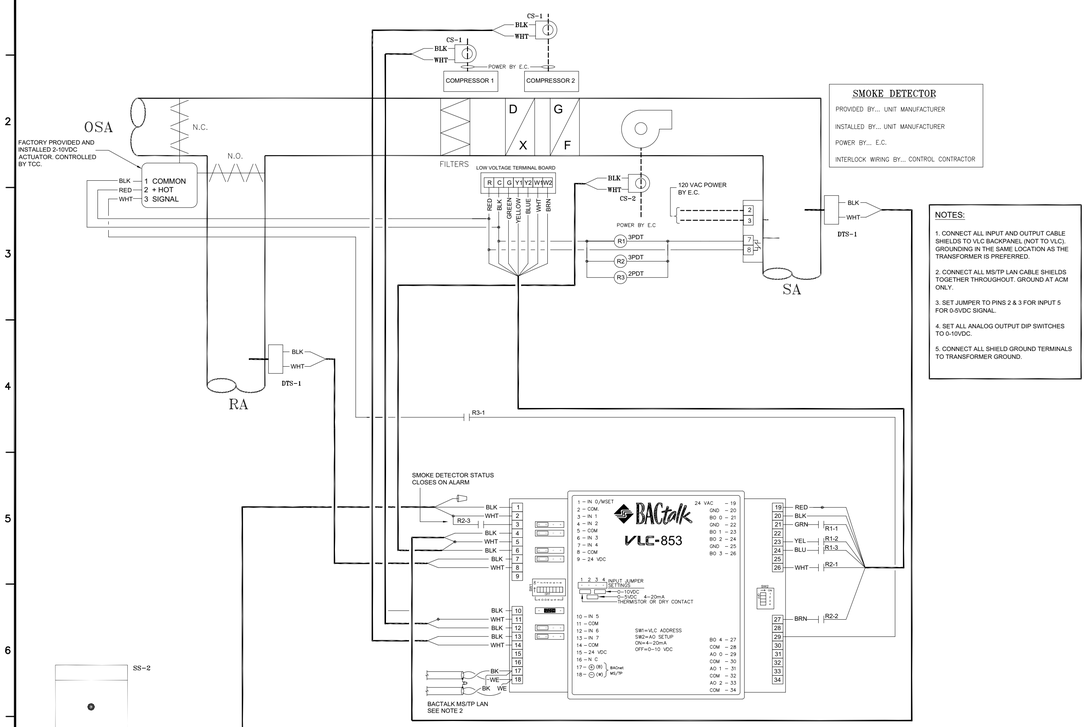

AC UNIT CONTROL DIAGRAM

MAXIMUM TWO STAGES COOLING
MAXIMUM TWO STAGES HEATING
TYPICAL OF 1: AC-4.

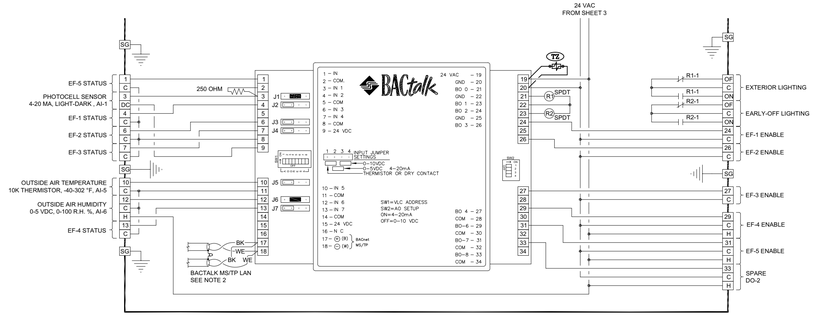

LIGHTING & EXHAUST FAN CONTROL DIAGRAM

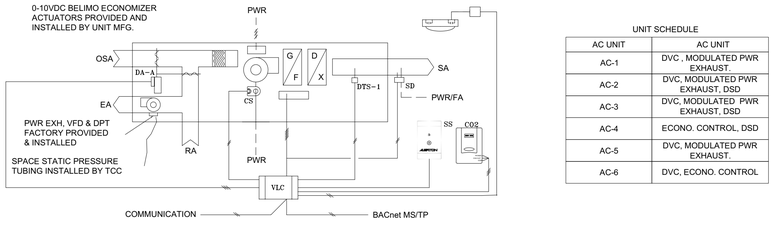

UNIT SCHEDULE	
AC UNIT	AC UNIT
AC-1	DVC , MODULATED PWR EXHAUST.
AC-2	DVC, MODULATED PWR EXHAUST, DSD
AC-3	DVC, MODULATED PWR EXHAUST, DSD
AC-4	ECONO. CONTROL, DSD
AC-5	DVC, MODULATED PWR EXHAUST.
AC-6	DVC, ECONO. CONTROL

SEE MATRIX TO DETERMINE IF THE AC UNIT GETS A CO2 SENSOR FOR DEMAND CONTROLLED VENTILATION, OCCUPANCY SENSOR FOR TITLE 24 SET BACK CONTROL AND MODULATED POWER EXHAUST ECONONMIZER CONTROL AND DUCT SMOKE DETECTORS.

AC UNIT WITH OCC SENSOR TYP. AC-1 THRU AC-6

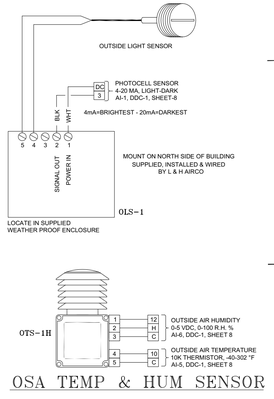

OSA TEMP & HUM SENSOR

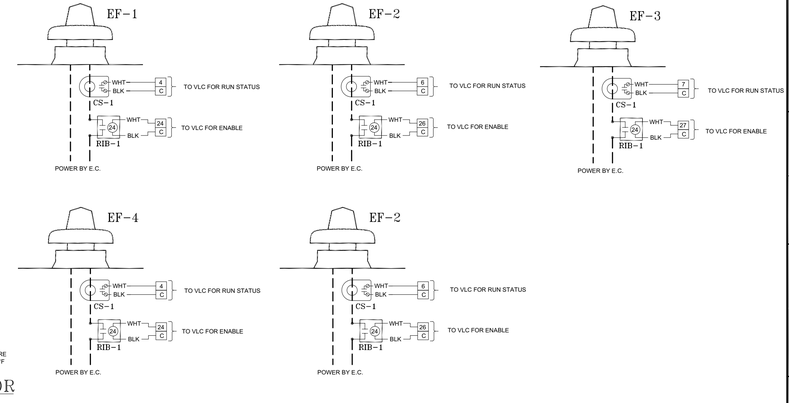

IDENTIFICATION STAMP
DIV. OF THE STATE ARCHITECT
APP: 03-121324 INC: A
REVIEWED FOR
SS ☐ FLS ☐ ACS ☑
DATE: 09/14/2022

OFFICE OF THE STATE FIRE MARSHAL
APPROVED FIRE AND PANIC ONLY

09/07/22
21-0233

Approval of this plan does not authorize or approve any omission or deviation from applicable regulations. Final approval is subject to field inspection. One set of approved plans shall be available on the project site at all times.

DGS GENERAL SERVICES

Department of General Services
Architecture & Engineering Sections
State of California
Real Estate Services Division
Project Management & Development Branch
707 Third Street, Suite 4-105
West Sacramento, California 95605

REGISTERED PROFESSIONAL ENGINEER
MATTHEW TODD MILES
No. M29425
MECHANICAL
STATE OF CALIFORNIA
7/12/2022

DMV
State of California
Department of Motor Vehicles

Issue		
No.	Date	Description
1	9/2/22	

Project
SANTA MARIA FIELD OFFICE REPLACEMENT
2770 SANTA MARIA WAY
SANTA MARIA, CA 93455
SANTA BARBARA COUNTY

DEPT OF MOTOR VEHICLES

Supervisor	Designed	Drawn
M.MILES	S.HANNA	S.HANNA

DSA App No.	SFM Permit No.
03-121324	21-S-0233-CP-ER

Sheet Title
MECHANICAL CONTROLS

Project Number
DGS000000140725

Reference North

Sheet Scale
NONE

Sheet Number
M622

Copyright © 2022, California Department of General Services - Real Estate Services Division

CAD File: X:\Projects\14xxxx\140725\DWG\PLTM622.dwg Plot Date: Jul 04, 2022 - 11:55pm Plotted by: i7-4770K

RELATIVE BORDER SCALE IN INCHES 0 1 2 3

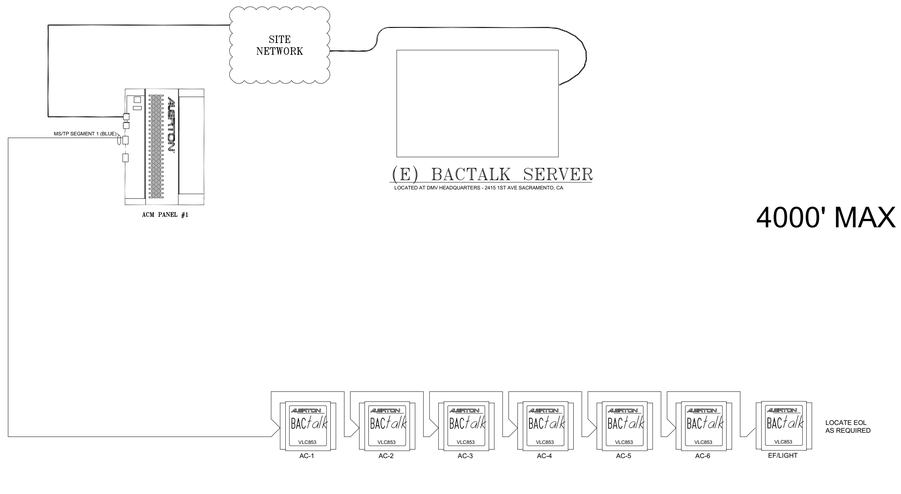

4000' MAX

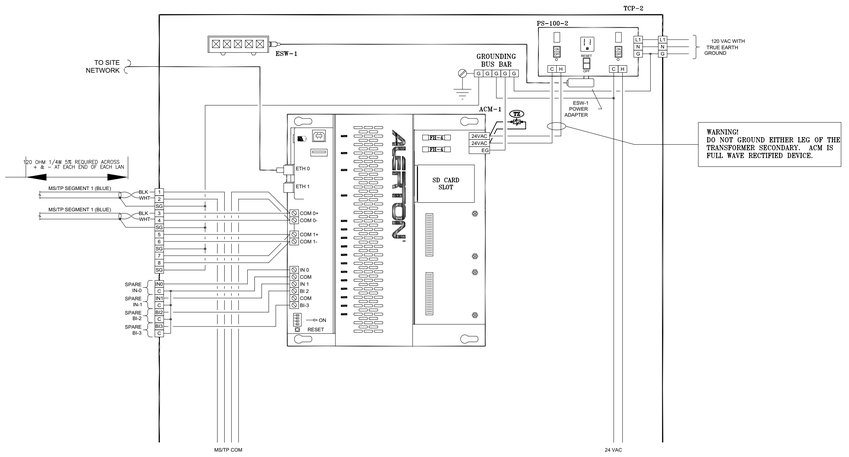

SYSTEM ARCHITECTURE

ACM GLOBAL CONTROLLER DIAGRAM

PANEL #1, PROCESSOR ROOM

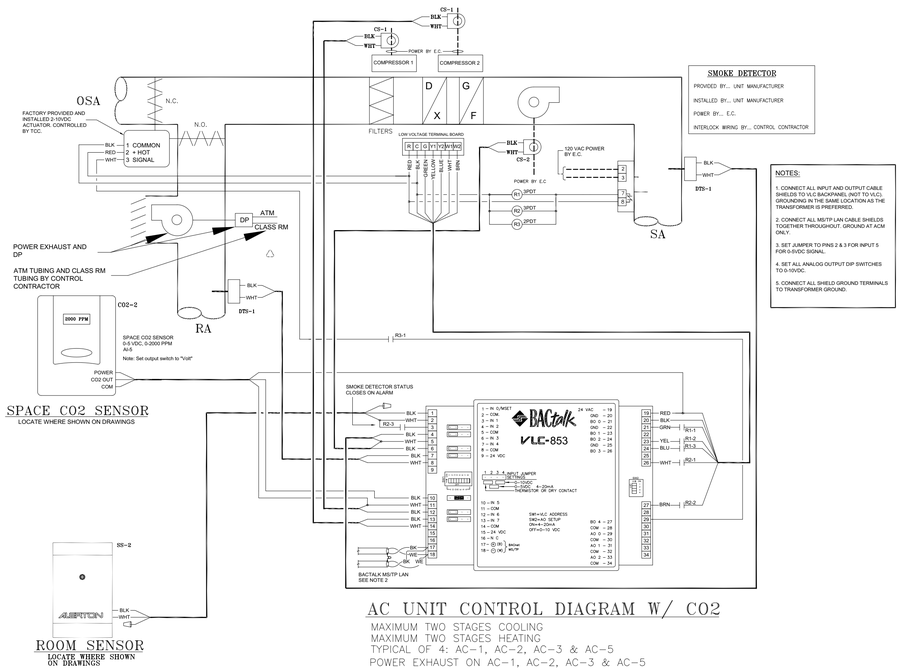

AC UNIT CONTROL DIAGRAM W/ CO2

MAXIMUM TWO STAGES COOLING
MAXIMUM TWO STAGES HEATING
TYPICAL OF 4: AC-1, AC-2, AC-3 & AC-5
POWER EXHAUST ON AC-1, AC-2, AC-3 & AC-5
NO DSD FOR AC-1 & AC-5

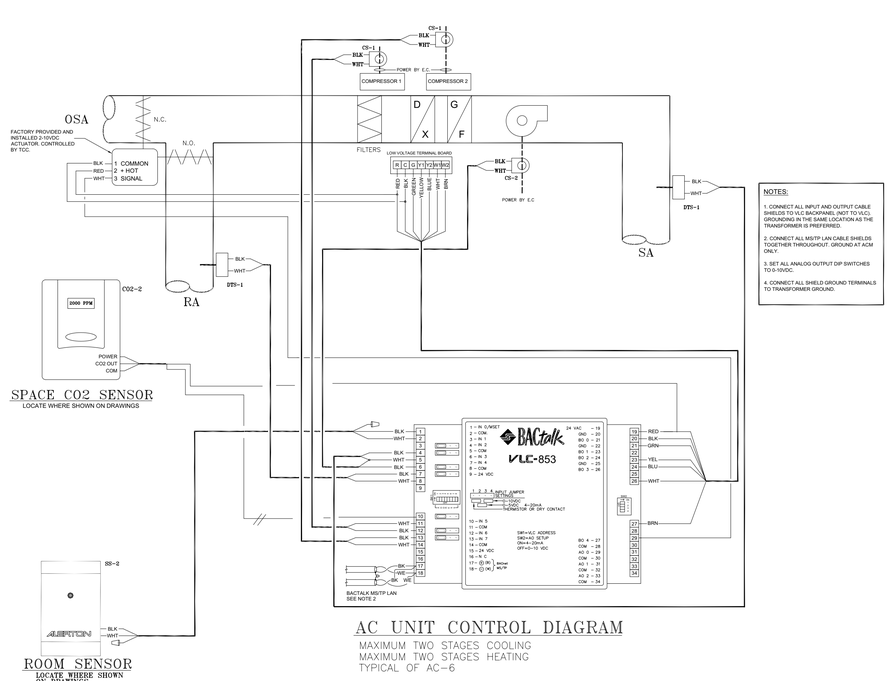

AC UNIT CONTROL DIAGRAM

MAXIMUM TWO STAGES COOLING
MAXIMUM TWO STAGES HEATING
TYPICAL OF AC-6

IDENTIFICATION STAMP
DIV. OF THE STATE ARCHITECT
APP: 03-121324 INC:
REVIEWED FOR
SS ☐ FLS ☐ ACS ☑
DATE: 09/14/2022

OFFICE OF THE STATE FIRE MARSHAL
APPROVED FIRE AND PANIC ONLY
09/07/22
21-0233
Approval of this plan does not authorize or approve any omission or deviation from applicable regulations. Final approval is subject to field inspection. One set of approved plans shall be available on the project site at all times.

DGS GENERAL SERVICES
Department of General Services
Architecture & Engineering Sections
State of California
Real Estate Services Division
Project Management & Development Branch
707 Third Street, Suite 4-105
West Sacramento, California 95605

REGISTERED PROFESSIONAL ENGINEER
MATTHEW TODD MILES
No. M29425
MECHANICAL
STATE OF CALIFORNIA
7/12/2022

DMV
State of California
Department of Motor Vehicles

Issue		
No.	Date	Description
1	9/2/22	

Project
SANTA MARIA FIELD OFFICE REPLACEMENT
2770 SANTA MARIA WAY
SANTA MARIA, CA 93455
SANTA BARBARA COUNTY

DEPT OF MOTOR VEHICLES

Supervisor	Designed	Drawn
M.MILES	S.HANNA	S.HANNA

DSA App No. 03-121324
SFM Permit No. 21-S-0233-CP-ER

Sheet Title
MECHANICAL CONTROLS

Project Number
DGS000000140725

Reference North
Sheet Scale NONE
Sheet Number M623

Copyright © 2022, California Department of General Services - Real Estate Services Division

RELATIVE BORDER SCALE IN INCHES 0 1 2 3

CAD File: X:\Projects\14xxxx\140725\DWG\PLTM623 MECHANICAL CONTROLS.dwg Plot Date: Jul 04, 2022 - 11:55pm Plotted by: IT-KDK

PIPING SYMBOLS

- GENERAL VALVE, SEE SPECIFICATIONS
- 3-WAY VALVE
- ANGLE VALVE (NON-RETURN SHUT-OFF VALVE)
- BALANCE VALVE
- BALL VALVE
- BUTTERFLY VALVE
- CHECK VALVE
- CIRCUIT SETTER
- CONTROL VALVE
- GATE VALVE
- GLOBE VALVE
- NEEDLE VALVE
- PLUG VALVE
- QUICK OPENING VALVE
- RELIEF VALVE
- TRIPLE DUTY VALVE (COMBINATION SHUTOFF, BALANCING AND CHECK VALVE)
- TRIPLE DUTY VALVE WITH MEASURING CONNECTIONS
- AUTOMATIC AIR VENT
- MANUAL AIR VENT
- DAMPER
- DRAIN
- FLEXIBLE HOSE
- FLEXIBLE CONNECTOR
- FLOAT DUMP VALVE
- FLOAT OPERATED VALVE
- FLOW METER
- ORIFICE
- PETE'S PLUG
- PIPE CAP
- PRESSURE REGULATOR/REDUCER
- PRESSURE GAGE
- REDUCER
- THERMOMETER
- UNION
- Y-TYPE STRAINER
- Y-TYPE STRAINER W/ VALVE
- DIRECTION OF FLOW
- MOTORIZED ACTUATOR
- FC =FAIL CLOSED
  FO =FAIL OPEN
  FI =FAIL INDETERMINATE
  FL =FAIL LOCKED
- LC =LOCK CLOSED
  LO =LOCK OPEN
  NC =NORMALLY CLOSED
  NO =NORMALLY OPEN

PIPE LEGEND

- DOMESTIC COLD WATER
- COLD WATER W/ HEATING CABLE
- CHILLED WATER RETURN
- CHILLED WATER SUPPLY
- CONDENSER WATER RETURN
- CONDENSER WATER SUPPLY
- TREATED WATER
- DOMESTIC HOT WATER
- HOT WATER RETURN
- HOT WATER W/ HEATING CALBE
- LOW PRESSURE STEAM
- MEDIUM PRESSURE STEAM
- HIGH PRESSURE STEAM
- STEAM VAPOR
- TEMPERED WATER
- SANITARY WASTE
- ACID WASTE
- GREASE WASTE
- SANITARY VENT
- ACID VENT
- FUEL OIL (DIESEL)
- GAS
- LIQUEFIED PETROLEUM GAS
- COMPRESSED AIR
- CONDENSATE DRAIN
- CONDENSATE RETURN
- FIRE WATER
- OXYGEN
- REFRIGERANT
- RAIN WATER LEADER
- SOFT WATER
- TRAP PRIMER
- VACUUM
- HEATING CABLE CIRCUIT START
- HEATING CABLE CIRCUIT END
- ITEM TO BE DEMOLISHED

PLUMBING SYMBOLS

- FLOOR DRAIN
- FLOOR CLEANOUT
- GRADE CLEANOUT
- FLOOR SINK
- HOSE BIBB
- AIR COUPLER
- CONCRETE VALVE BOX
- WALL CLEANOUT
- INLINE PUMP
- PUMP
- POINT OF CONNECTION
- WC-1 FIXTURE TAG
- KEYED NOTE
- AC 1 EQUIPMENT TAG

4 PLUMBING SYMBOLS AND PIPE LEGEND

1. ALL WORK AND MATERIALS SHALL COMPLY WITH THE 2019 REGULATIONS OF THE STATE FIRE MARSHAL, CALIFORNIA CODE OF REGULATIONS, SERVING UTILITY COMPANIES, AND OTHER APPLICABLE STATE ORDINANCES. NOTHING IN THESE PLANS OR SPECIFICATIONS IS TO BE CONSTRUED AS TO PERMIT WORK NOT CONFORMING TO THESE CODES. WHERE WORK OF A HIGHER DEGREE IS INDICATED IN THE PLANS OR SPECIFICATIONS THIS REQUIREMENT SHALL GOVERN.
2. THE AUTOMATIC FIRE SPRINKLER SYSTEM SHALL CONFORM TO THE REQUIREMENTS OF THE 2019 EDITION OF THE NATIONAL FIRE PROTECTION ASSOCIATION STANDARD 13.
3. INSTALLATION OF THE FIRE SPRINKLER SYSTEM SHALL NOT BE STARTED UNTIL COMPLETE PLANS AND SPECIFICATIONS (INCLUDING WATER SUPPLY INFORMATION AND TYPE OF SYSTEM, IF ANY) HAVE BEEN APPROVED BY THE CALIFORNIA STATE FIRE MARSHAL.
4. AT VARIOUS STAGES AND UPON COMPLETION, THE SYSTEM SHALL BE TESTED IN THE PRESENCE OF THE CALIFORNIA STATE FIRE MARSHAL.
5. A COPY OF ALL FIRE MARSHAL APPROVED FIRE ALARM PLANS SHALL BE PROVIDED TO THE STATE ELECTRICAL ENGINEER FOR

X01_XX01

3 FIRE SPRINKLER DEFERRED APPROVAL NOTES

SCALE

MARK	MANUFACTURER & MODEL	DESCRIPTION	ELECTRICAL (VAC-Ph-Hz)	WEIGHT (LBS)
EWH 1, EWH 2, EWH 3	EEMAX SPEX4208T ML, CHRONOMITE LABORATORIES, OR EQUAL	ELECTRIC TANKLESS WATER HEATER FOR LAVATORY SINKS, ACTIVATION WITH 0.2 GPM, 110°F MAXIMUM TEMPERATURE SETTING 56°F TEMPERATURE RISE AT 0.5 GPM	208-1-60 4.1 kW 20 A	5
EWH 4, EWH 5, EWH 6	EEMAX PRO11240, CHRONOMITE LABORATORIES, OR EQUAL	ELECTRIC TANKLESS WATER HEATER ACTIVATION WITH 0.3 GPM, 80-140°F TEMPERATURE CONTROL 56°F TEMPERATURE RISE AT 1.0 GPM	208-1-60 8.2 kW 40 A	10
GD 1	EVOLUTION SERIES COMPACT, IN-SINK-ERATOR OR EQUAL	GARBAGE DISPOSAL 3/4 HP, CONNECT TO WALL SWITCH FOR ON/OFF CONTROL	120-1-60 8.1 AMP	20

X01_XX01

1 PLUMBING EQUIPMENT SCHEDULE

SCALE

MARK	PLUMBING FIXTURE	HOT WATER (IN.) OUTLET	HOT WATER (IN.) BRANCH	COLD WATER (IN.) OUTLET	COLD WATER (IN.) BRANCH	WASTE (IN.) OUTLET	WASTE (IN.) BRANCH	VENT (IN.)
DF-1	DRINKING FOUNTAIN	-	-	½	¾	1½	2	1½
FD-1	FLOOR DRAIN	-	-	-	-	1½	2	1½
HB-1	HOSE BIBB	-	-	½	¾	-	-	-
L-1	LAVATORY SINK	½	¾	½	¾	2	2	1½
L-2	LAVATORY SINK	½	¾	½	¾	2	2	1½
MS-1	MOP SINK	½	¾	½	¾	2	2	2
S-1	KITCHEN SINK	½	¾	½	¾	1½	2	1½
GD-1	KITCHEN SINK DISPOSER	-	-	-	-	1½	2	-
TP-1	TRAP PRIMER	-	-	½	½	-	-	-
UR-1	URINAL (ADA)	-	-	½	¾	2	2	2
UR-2	URINAL	-	-	½	¾	2	2	2
WC-1	WATER CLOSET (ADA)	-	-	½	¾	3	3	2
WC-2	WATER CLOSET	-	-	½	¾	3	3	2

2 PLUMBING FIXTURE CONNECTIONS

IDENTIFICATION STAMP
DIV. OF THE STATE ARCHITECT
APP: 03-121324 INC: A
REVIEWED FOR
SS ☐ FLS ☐ ACS ☑
DATE: 09/14/2022

OFFICE OF THE STATE FIRE MARSHAL
APPROVED FIRE AND PANIC ONLY
09/07/22
21-0233
Approval of this plan does not authorize or approve any omission or deviation from applicable regulations. Final approval is subject to field inspection. One set of approved plans shall be available on the project site at all times.

GENERAL SERVICES
Department of General Services
Architecture & Engineering Sections
State of California
Real Estate Services Division
Project Management & Development Branch
707 Third Street, Suite 4-105
West Sacramento, California 95605

REGISTERED PROFESSIONAL ENGINEER
MATTHEW TODD MILES
No. M29425
MECHANICAL
STATE OF CALIFORNIA
7/12/2022

DMV
State of California
Department of Motor Vehicles

Issue No.	Date	Description
1	9/2/22	

Project
SANTA MARIA FIELD OFFICE REPLACEMENT
2770 SANTA MARIA WAY
SANTA MARIA, CA 93455
SANTA BARBARA COUNTY
DEPT OF MOTOR VEHICLES

Supervisor	Designed	Drawn
M.MILES	S.HANNA	S.HANNA

DSA App No. 03-121324
SFM Permit No. 21-S-0233-CP-ER

Sheet Title
PLUMBING ABBREVIATIONS SYMBOLS & NOTES

Project Number
DGS000000140725

Reference North
Sheet Scale NONE
Sheet Number P001

Copyright © 2022, California Department of General Services - Real Estate Services Division

CAD File: X:\Projects\14xxxx\140725\DWG\PLT\P001 PLUMBING ABBREVIATION, SYMBOLS & NOTES.dwg Plot Date: Jul 04, 2022 - 11:56pm Plotted by: I7-4770K

RELATIVE BORDER SCALE IN INCHES 0 1 2 3

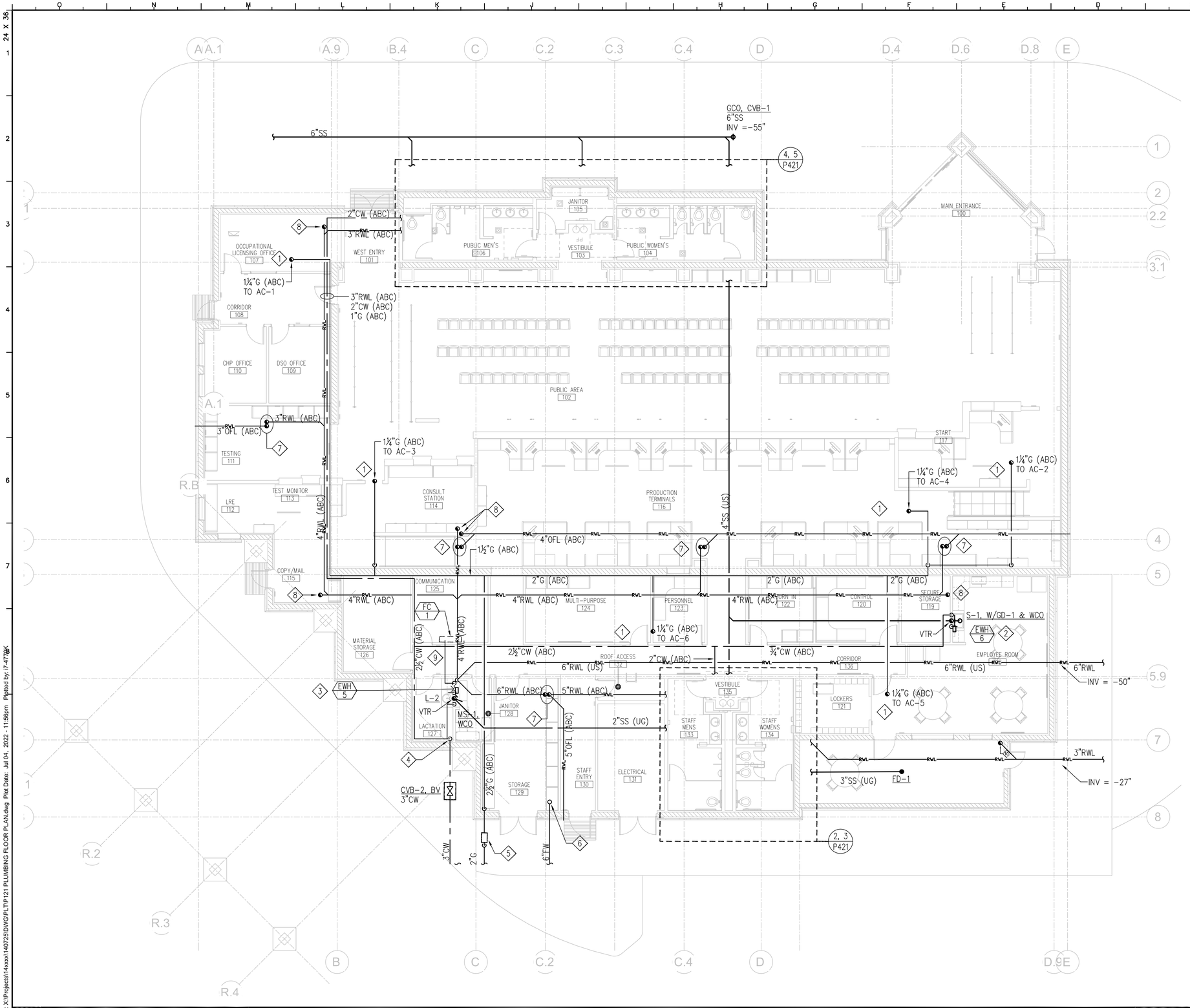

1 PLUMBING PLAN — 1/8"=1'-0"

1. GAS RISER TO AC UNITS ON ROOF.
2. INSTALL EWH UNDER SINK CABINET.
3. INSTALL EWH FOR SINK AND MS IN JANITOR ROOM .
4. 3" CW RISER WITH LEED METER
5. GAS METER (830 MBH DEMAND). SET OUTLET PRESSURE TO MIN. OF 7" W.C. ,FOLLOW THE GAS CLEARANCES FOUND IN SOCALGAS (GAS SERVICE GUIDE BOOK) REQUIREMENTS , SECTION 4 FOR NON – RESIDENTIAL SINGLE GAS METER.
6. 6" FIRE RISER. SEE SHEET NOTES.
7. RAINWATER LEADER AND OVERFLOW FROM DROPS FROM ROOF DRAIN.
8. RAINWATER LEADER RISER TO CLEANOUT ON ROOF.
9. ROUTE FAN COIL CONDENSATE DRAIN ABOVE CEILING AS SHOWN AND DROP IN WALL TO JANITOR SINK TERMINATE @ 4".
10. 3" RAIN WATER LEADER FROM PATIO ROOF AND DROP BELOW GRADE.

KEY NOTES

1. PLUMBING CONTRACTOR TO COORDINATE UNDER SLAB PIPING WITH METHANE PIPING.
2. PLUMBING CONTRACTOR TO INSURE THE PROTECTION OF THE HORIZONTAL METHANE PIPING BARRIER AND THE REQUIREMENT FOR TRENCH DAMS FOR PIPING THAT EXTEND FROM THE SITE TO BELOW THE SLAB-ON-GRADE.
3. CONTRACTOR TO FOLLOW NFPA 24 FOR PRIVATE FIRE SERVICE MAIN AND RISER REQUIREMENTS.
   - FIRE SERVICE MAIN SUPPLYING FIRE PROTECTION SYSTEM WITHIN THE BUILDING SHALL BE PERMITTED TO EXTEND NO MORE THAN 10 FEET, AS MEASURED FROM THE OUTSIDE OF THE BUILDING, UNDER THE BUILDING TO THE RISER LOCATION.
   - PIPING SHALL BE INSTALLED A MINIMUM OF 12 INCHES BELOW THE BOTTOM OF BUILDING FOUNDATIONS OR FOOTERS.
   - MECHANICAL JOINTS SHALL NOT BE USED BENEATH THE BUILDING.
4. CONTRACTOR TO EXTEND UNDERGROUND FIRE PIPE INTO THE BUILDING THROUGH THE SLAB OR WALL NOT MORE THAN 24".

SHEET NOTES

IDENTIFICATION STAMP
DIV. OF THE STATE ARCHITECT
APP: 03-121324 INC:
REVIEWED FOR
SS ☐ FLS ☐ ACS ☑
DATE: 09/14/2022

OFFICE OF THE STATE FIRE MARSHAL
APPROVED FIRE AND PANIC ONLY
09/07/22
21-0233
Approval of this plan does not authorize or approve any omission or deviation from applicable regulations. Final approval is subject to field inspection. One set of approved plans shall be available on the project site at all times.

DGS GENERAL SERVICES
Department of General Services
Architecture & Engineering Sections
State of California
Real Estate Services Division
Project Management & Development Branch
707 Third Street, Suite 4-105
West Sacramento, California 95605

REGISTERED PROFESSIONAL ENGINEER
MATTHEW TODD MILES
No. M29425
MECHANICAL
STATE OF CALIFORNIA
7/12/2022

DMV
State of California
Department of Motor Vehicles

Issue		
No.	Date	Description
1	9/2/22	

Project
SANTA MARIA FIELD OFFICE REPLACEMENT
2770 SANTA MARIA WAY
SANTA MARIA, CA 93455
SANTA BARBARA COUNTY

DEPT OF MOTOR VEHICLES

Supervisor	Designed	Drawn
M.MILES	S.HANNA	S.HANNA

DSA App No.	SFM Permit No.
03-121324	21-S-0233-CP-ER

Sheet Title
PLUMBING FLOOR PLAN

Project Number
DGS000000140725

Reference North

Sheet Scale
1/8" = 1'-0"

Sheet Number
P121

Copyright © 2022, California Department of General Services - Real Estate Services Division

CAD File: X:\Projects\14xxxx\140725\DWG\PLT\P121 PLUMBING FLOOR PLAN.dwg Plot Date: Jul 04, 2022 - 11:56pm Plotted by: i7-477BK

RELATIVE BORDER SCALE IN INCHES 0 1 2 3

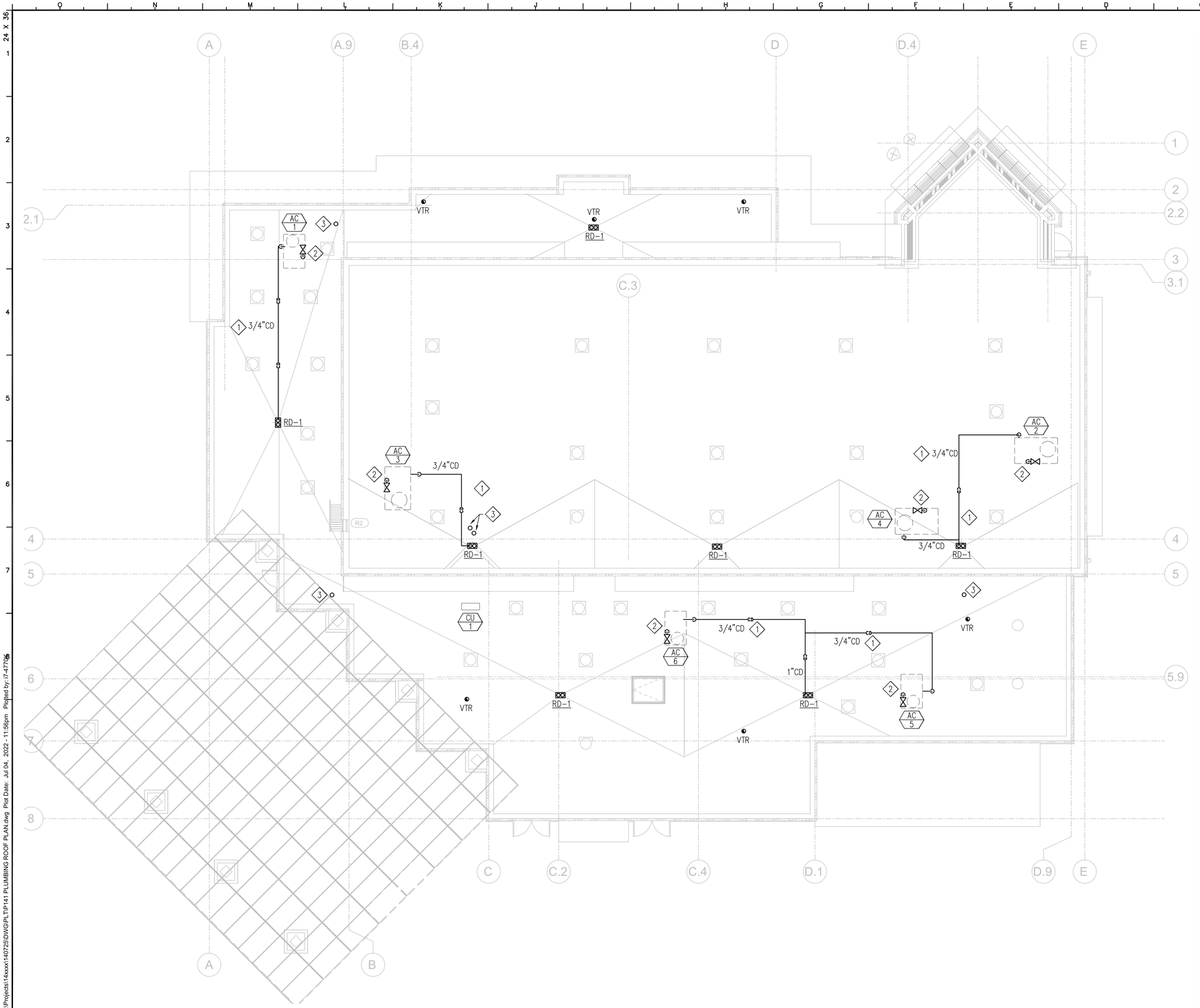

1 PLUMBING ROOF PLAN

1/8"=1'-0"

1. CONNECT CONDENSATE DRAIN PIPE TO HVAC UNIT WITH P-TRAP AND CLEANOUTS, DISCHARGE CONDENSATE DRAIN INTO PRIMARY ROOF DRAIN.
2. CONNECT GAS PIPE RISER TO HVAC UNIT WITH SHUT-OFF VALVE AND DIRT LEG. GAS RISER SHALL BE WITHIN EQUIPMENT ROOF CURB.
3. RAINWATER LEADER CLEANOUT. EXTEND RWL PIPE THROUGH ROOF AND TERMINATE 12" ABOVE FINISHED ROOF WITH A TAPERED PLUG CLEANOUT.

KEY NOTES

1. PLUMBING CONTRACTOR TO COORDINATE PLUMBING PIPES WITH OTHER TRADES TO INSURE CODE COMPLIANCE AND CLEARANCES ON ROOF.
2. PLUMBING CONTRACTOR TO COORDINATE PLUMBING PIPING WITH AC MANUFACTURE RECOMMENDATIONS FOR CONDENSATE DRAIN INSTALLATION AND POINT OF CONNECTIONS ON ROOF.
3. PLUMBING CONTRACTOR TO FOLLOW ALL SPECIFICATION AND CODE REQUIREMENTS FOR ROOF PENETRATIONS AND TO COORDINATE WITH OTHER CONTRACTORS.
4. PLUMBING CONTRACTOR TO FOLLOW ALL CODE REQUIREMENTS AND BEST PRACTICE TO PROVIDE CLEANOUTS AND OTHER PLUMBING COMPONENTS TO INSURE A WORKING PLUMBING SYSTEM AS NECESSARY.
5. PROVIDE SLOPE OF $\frac{1}{8}$" PER FOOT OR MORE FOR CONDENSATE PIPE. CONTRACTOR TO FOLLOW ALL PLUMBING CODE REQUIREMENTS FOR PIPE SLOPES.

SHEET NOTES

IDENTIFICATION STAMP
DIV. OF THE STATE ARCHITECT
APP: 03-121324 INC:
REVIEWED FOR
SS ☐ FLS ☐ ACS ☑
DATE: 09/14/2022

OFFICE OF THE STATE FIRE MARSHAL
APPROVED FIRE AND PANIC ONLY
09/07/22
21-0233
Approval of this plan does not authorize or approve any omission or deviation from applicable regulations. Final approval is subject to field inspection. One set of approved plans shall be available on the project site at all times.

DGS GENERAL SERVICES
Department of General Services
Architecture & Engineering Sections
State of California
Real Estate Services Division
Project Management & Development Branch
707 Third Street, Suite 4-105
West Sacramento, California 95605

REGISTERED PROFESSIONAL ENGINEER
MATTHEW TODD MILES
No. M29425
MECHANICAL
STATE OF CALIFORNIA
7/12/2022

DMV
State of California
Department of Motor Vehicles

Issue

No.	Date	Description
1	9/2/22	

Project
SANTA MARIA FIELD OFFICE REPLACEMENT
2770 SANTA MARIA WAY
SANTA MARIA, CA 93455
SANTA BARBARA COUNTY

DEPT OF MOTOR VEHICLES

Supervisor	Designed	Drawn
M.MILES	S.HANNA	S.HANNA

DSA App No.	SFM Permit No.
03-121324	21-S-0233-CP-ER

Sheet Title
PLUMBING ROOF PLAN

Project Number
DGS000000140725

Reference North

Sheet Scale
1/8" = 1'-0"

Sheet Number
P141

Copyright © 2022, California Department of General Services - Real Estate Services Division

CAD File: X:\Projects\14xxxx\140725\DWG\PLTP141 PLUMBING ROOF PLAN.dwg Plot Date: Jul 04, 2022 - 11:56pm Plotted by: i7-4770S

RELATIVE BORDER SCALE IN INCHES 0 1 2 3

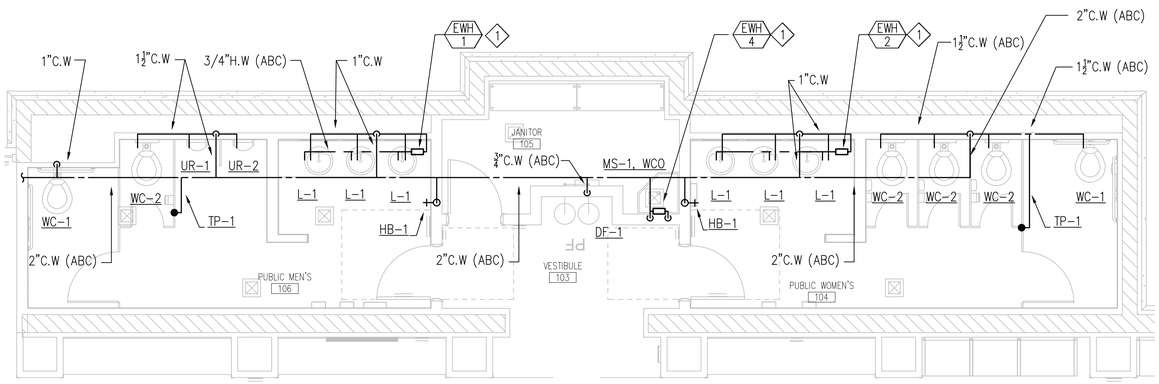

4 PARTIAL PLUMBING PLAN (CW, HW) 1/4"=1'-0"

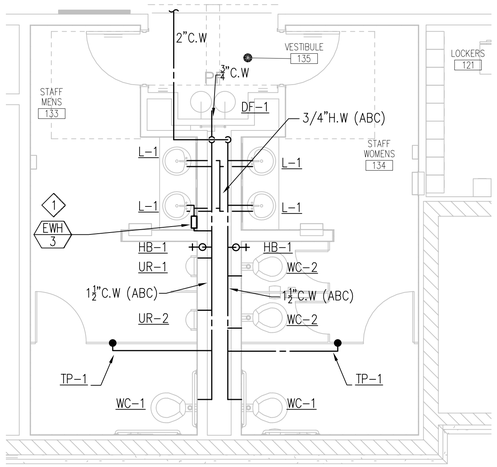

2 PARTIAL PLUMBING PLAN (CW, HW) 1/4"=1'-0"

1. INSTALL ELECTRIC WATER HEATER PER MANUFACTURER RECOMENDATION AND CLEARANCES IN SINK CABINET ABOVE FINISHED FLOOR. BOTTOM OF FAUCET AT 3'-0" ABOVE FINISHED FLOOR.
2. RAIN WATER LEADER AND OVERFLOW FROM ROOF DRAIN.
3. SANITARY SEWER DROP AND VENT THROUGH ROOF.
4. 3" RAIN WATER LEADER FROM PATIO ROOF AND DROP BELOW GRADE.

1. PROVIDE WATER HAMMER ARRESTER PER CODE AND AS REQUIRED.
2. PROVIDE MIXING AND CHECK VALVES AS NECESSARY FOR JANITORIAL SINK.
3. INSTALL EWH IN AN ENCLOSURE NOT TO BE ACCESSIBLE BY PUBLIC.
4. PROVIDE ISOLATION VALVE PER RESTROOM TO ALLOW FOR REPAIRS WITHOUT FULL SHUT DOWN.
5. FOLLOW ALL CODE REQUIREMENTS AND BEST PRACTICE TO PROVIDE A FULLY WORKING PLUMBING SYSTEM WITH ALL ACCESSORIES NECESSARY.
6. COORDINATE PIPE ROUTING WITH ALL OTHER TRADES INVOLVED.

1 KEY & SHEET NOTES

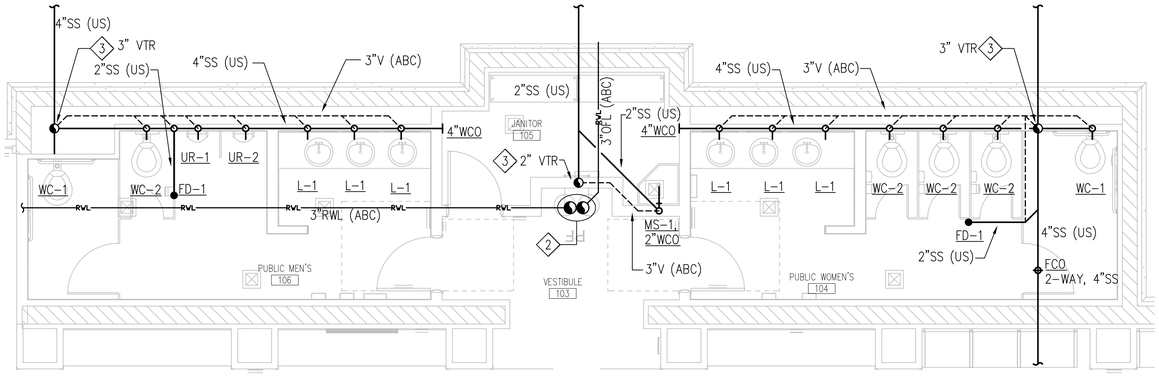

5 PARTIAL PLUMBING PLAN (SS, V, RW) 1/4"=1'-0"

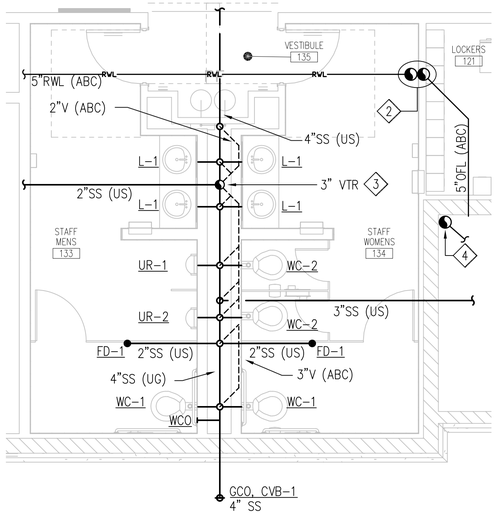

3 PARTIAL PLUMBING PLAN (SS, V, RW) 1/4"=1'-0"

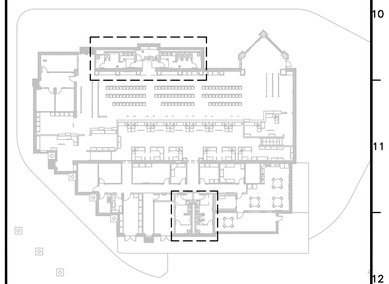

KEY PLAN

IDENTIFICATION STAMP
DIV. OF THE STATE ARCHITECT
APP: 03-121324 INC:
REVIEWED FOR
SS ☐ FLS ☐ ACS ☑
DATE: 09/14/2022

OFFICE OF THE STATE FIRE MARSHAL
APPROVED FIRE AND PANIC ONLY
09/07/22
21-0233
Approval of this plan does not authorize or approve any omission or deviation from applicable regulations. Final approval is subject to field inspection. One set of approved plans shall be available on the project site at all times.

DGS GENERAL SERVICES
Department of General Services
Architecture & Engineering Sections
State of California
Real Estate Services Division
Project Management & Development Branch
707 Third Street, Suite 4-105
West Sacramento, California 95605

REGISTERED PROFESSIONAL ENGINEER
MATTHEW TODD MILES
No. M29425
MECHANICAL
STATE OF CALIFORNIA
7/12/2022

DMV
State of California
Department of Motor Vehicles

Issue

No.	Date	Description
1	9/2/22	

Project
SANTA MARIA FIELD OFFICE REPLACEMENT
2770 SANTA MARIA WAY
SANTA MARIA, CA 93455
SANTA BARBARA COUNTY

DEPT OF MOTOR VEHICLES

Supervisor	Designed	Drawn
M.MILES	S.HANNA	S.HANNA

DSA App No. 03-121324
SFM Permit No. 21-S-0233-CP-ER

Sheet Title
PLUMBING SECTIONS

Project Number
DGS000000140725

Reference North
Sheet Scale 1/4" = 1'-0"
Sheet Number P421

Copyright © 2022 California Department of General Services - Real Estate Services Division

RELATIVE BORDER SCALE IN INCHES 0 1 2 3

CAD File: X:\Projects\14xxxx\140725\DWG\PLT\P421 PLUMBING SECTIONS .dwg Plot Date: Jul 04, 2022 - 11:56pm Plotted by: i7-4770k

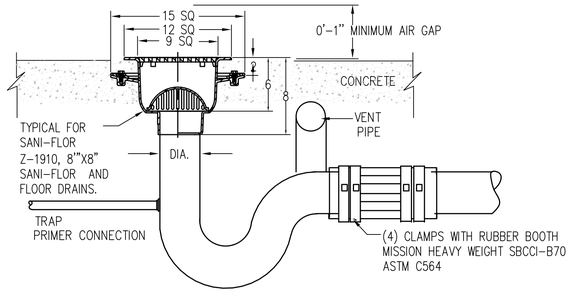

NOTE:

1. SQUARE FACE FOR FLOOR SINK, ROUND FACE FOR FLOOR DRAINS.
2. ONE TRAP PRIMER PER TRAP TO ENSURE SEAL INTEGRETY.
3. NO HUB CONNECTION WITH CLAMPS AND RUBBER BOOT.
4. CLEAN OUT IS INCLUDED IN THIS WORK.
5. COORDINATE WITH TRADES THAT DRAIN WILL BE AT LOWEST LOCATION BEFORE INSTALLING.
6. INSTALL FLUSH WITH FINISHED FLOOR TO PREVENT TRIPPING.

M15_PF15

7 FLOOR SINK AND FLOOR DRAIN — NO SCALE

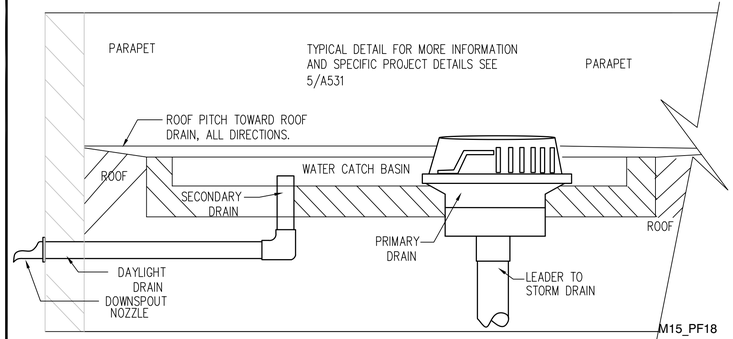

M15_PF18

4 ROOF DRAIN — NO SCALE

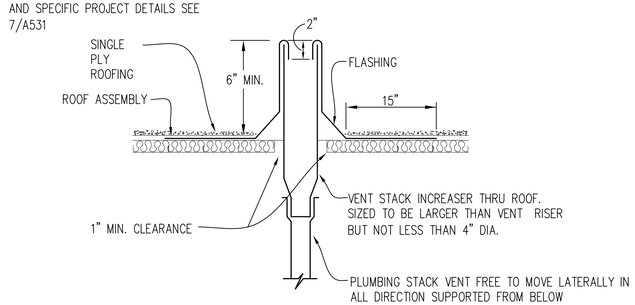

M15_DP02

5 VENT PIPING AT ROOF — NO SCALE

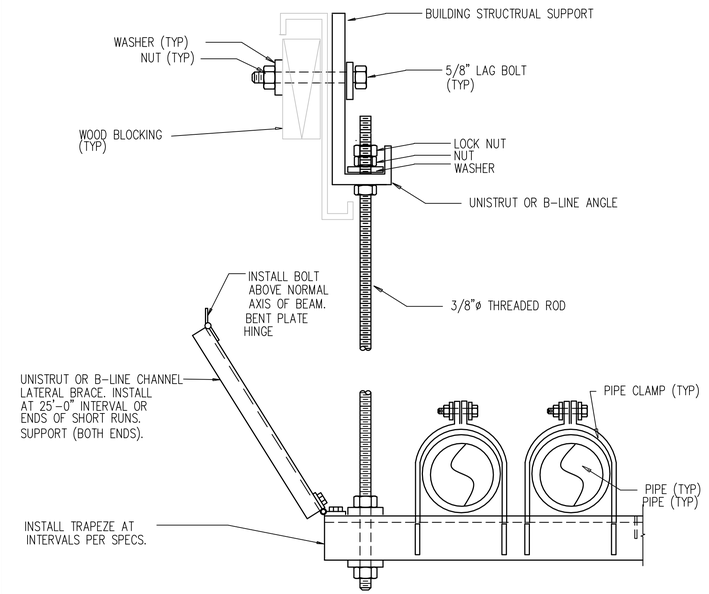

M15— HS30

1 PIPE HANGER & SUPPORT DETAIL — NO SCALE

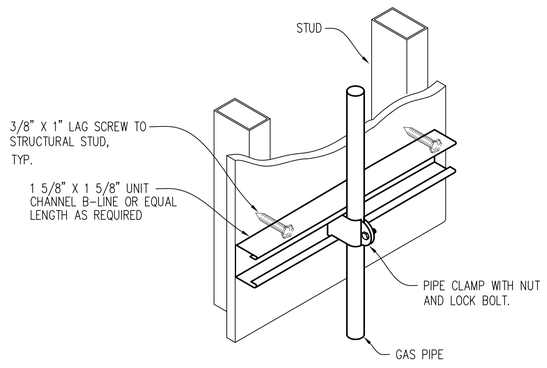

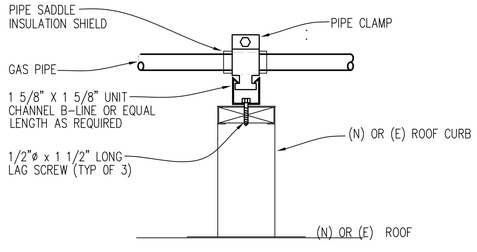

M15_AC09

9 GAS PIPE SUPPORT — NO SCALE

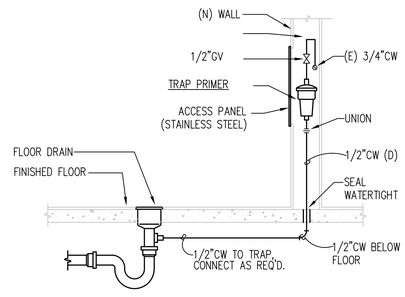

M15_DP04

6 TRAP PRIMER PIPING DETAIL — NO SCALE

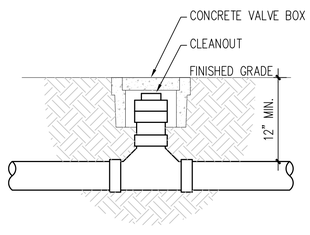

10 TYPICAL 2-WAY CLEANOUT TO GRADE — NTS

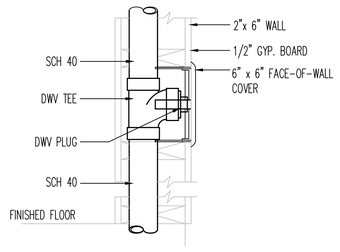

M15_DP06

8 WALL CLEANOUT — NO SCALE

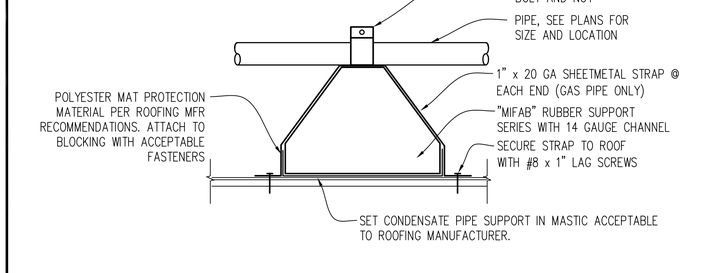

NOTE: 5'-0" DISTANCE BETWEEN PIPE SUPPORT

M15_PS04

2 PIPE SUPPORT ON ROOF — NO SCALE

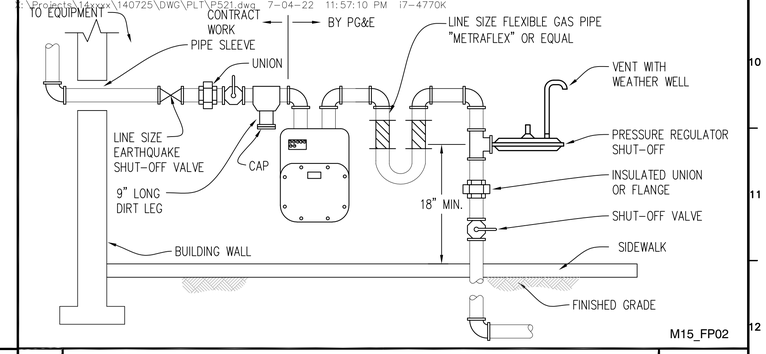

M15_FP02

3 GAS SHUT-OFF AND REGULATOR — NO SCALE

IDENTIFICATION STAMP
DIV. OF THE STATE ARCHITECT
APP: 03-121324 INC:
REVIEWED FOR
SS ☐ FLS ☐ ACS ☑
DATE: 09/14/2022

OFFICE OF THE STATE FIRE MARSHAL
APPROVED FIRE AND PANIC ONLY
09/07/22
21-0233
Approval of this plan does not authorize or approve any omission or deviation from applicable regulations. Final approval is subject to field inspection. One set of approved plans shall be available on the project site at all times.

DGS GENERAL SERVICES
Department of General Services
Architecture & Engineering Sections
State of California
Real Estate Services Division
Project Management & Development Branch
707 Third Street, Suite 4-105
West Sacramento, California 95605

REGISTERED PROFESSIONAL ENGINEER
MATTHEW TODD MILES
No. M29425
MECHANICAL
STATE OF CALIFORNIA
7/12/2022

DMV
State of California
Department of Motor Vehicles

Issue

No.	Date	Description
1	9/2/22	

Project
SANTA MARIA FIELD OFFICE REPLACEMENT
2770 SANTA MARIA WAY
SANTA MARIA, CA 93455
SANTA BARBARA COUNTY

DEPT OF MOTOR VEHICLES

Supervisor	Designed	Drawn
M.MILES	S.HANNA	S.HANNA

DSA App No. 03-121324 | SFM Permit No. 21-S-0233-CP-ER

Sheet Title
PLUMBING DETAILS

Project Number
DGS000000140725

Reference North | Sheet Scale NONE | Sheet Number P521

Copyright © 2022, California Department of General Services - Real Estate Services Division

CAD File: X:\Projects\14xxxx\140725\DWG\PLT\P521.dwg Plot Date: Jul 04, 2022 - 11:57pm Plotted by: i7-4770K

X:\Projects\14xxxx\140725\DWG\PLT\P521.dwg 7-04-22 11:57:10 PM i7-4770K

RELATIVE BORDER SCALE IN INCHES 0 1 2 3

GRAPHIC SYMBOLS FOR ELECTRICAL WIRING AND LAYOUT DIAGRAMS

SYMBOL	DESCRIPTION
	POLE–TOP ELECTROLIER
	POLE–ARM ELECTROLIER
	POLE–ARM DUAL ELECTROLIER
CEILING / WALL	
	SURFACE LED FIXTURE
X / X	EXIT LIGHT
	SURFACE OR PENDANT INDIVIDUAL LED FIXTURE
	RECESSED INDIVIDUAL LED FIXTURE
	SURFACE OR PENDANT CONTINUOUS ROW FLUORESCENT OR LED FIXTURES
A	RECESSED INDIVIDUAL LED FIXTURE WITH EMERGENCY LED DRIVER
A	SURFACE OR PENDANT INDIVIDUAL LED FIXTURE WITH EMERGENCY LED DRIVER
EM	EMERGENCY LIGHTING UNIT
B / B	BLANK OUTLET
J / J	JUNCTION BOX
FJ	RAISED FLOOR SERVICE PEDESTAL
	SINGLE RECEPTACLE OUTLET
	DUPLEX RECEPTACLE OUTLET
	FOURPLEX RECEPTACLE OUTLET
	SPLIT–WIRED DUPLEX RECEPTACLE OUTLET
	SPLIT–WIRED FOURPLEX RECEPTACLE OUTLET
(GFCI)	DUPLEX RECEPTACLE OUTLET (WITH GFCI)
(GFCI) WP	DUPLEX RECEPTACLE OUTLET, WEATHERPROOF (WITH GFCI)
	SINGLE, SPECIAL PURPOSE RECEPTACLE OUTLET
L / L	RECEPTACLE OUTLET WITH LOCKING COVER
	CLOCK HANGER RECEPTACLE
F	FAN
	FLUSH FLOOR SINGLE RECEPTACLE OUTLET
	FLUSH FLOOR DUPLEX RECEPTACLE OUTLET
	FLUSH FLOOR SPECIAL PURPOSE OUTLET
	FLOOR TELEPHONE/DATA OUTLET
	MULTI–FLOOR OUTLET, 2 OR MORE GANG
	MODULAR FURNITURE OUTLET (3 DATA/1 VOICE)
4	MODULAR FURNITURE OUTLET (1 DATA/1 VOICE)
2	MODULAR FURNITURE OUTLET (1 DATA)
	WALL OUTLET (1 DATA)
	WALL OUTLET ABOVE COUNTER (1 DATA)
	WALL OUTLET (1 DATA/1 VOICE)
2	WALL OUTLET (1 VOICE)
	SOFFIT MOUNT LED SIGN OUTLET (1 DATA)
C / QS1 / C	SOFFIT MOUNT QUEUE MONITOR OUTLET (1 DATA)
QPC	QUEUE PC LOCATION
QTP	QUEUE TICKET PRINTER LOCATION
S / OS1	OUTDOOR QUEUE SPEAKER
S / S1	INTERIOR QUEUE SPEAKER

SYMBOL	DESCRIPTION
S	SINGLE–POLE SWITCH
S_K	KEY OPERATED SWITCH
S_{WP}	WEATHERPROOF SWITCH
S_D	LOW VOLTAGE, NETWORKABLE, SWITCH WITH DIMMING CONTROL
OS	LOW VOLTAGE, NETWORKABLE, DUAL TECHNOLOGY, WALL–MOUNTED OCCUPANCY SENSOR SWITCH WITH DIMMING CONTROL
OS	LOW VOLTAGE, NETWORKABLE, DUAL TECHNOLOGY, CEILING–MOUNTED OCCUPANCY SENSOR SWITCH WITH DIMMING CONTROL
PP	LOW VOLTAGE OCCUPANCY SENSOR POWER PACK
S_T	MANUAL MOTOR STARTING SWITCH, THERMAL OVERLOAD TYPE
S_{HP}	MANUAL MOTOR STARTING SWITCH, WITHOUT OVERLOAD ELEMENT
S_{TS}	TIMER SWITCH
PEC	PHOTOELECTRIC CELL
	PUSHBUTTON
$_{WR}$	WIRELESS PUSHBUTTON
$_L$	PUSHBUTTON STATION, NC, WITH LOCKING DEVICE FOR OPEN
	PUSHBUTTON STATION MOTOR CONTROL
	BUZZER
	BELL
	COMBINATION BELL–BUZZER
	PRESSURE SWITCH
	CONTROL RELAY
	FLOW SWITCH
	HAND DRYER NOZZLE
	HAND DRYER
	FUSIBLE DISCONNECT SWITCH
	NON–FUSIBLE DISCONNECT SWITCH
T	TRANSFORMER
	FLUSH–MOUNTED PANELBOARD
	SURFACE–MOUNTED PANELBOARD
	EQUIPMENT ENCLOSURE
(2) 1/2" C, 2#12	CONDUCTOR INFO (PER CONDUIT)
	CONDUIT SIZE
	NUMBER OF CONDUITS (NO NUMBER INDICATES ONE CONDUIT)
	CROSS–LINES INDICATE NUMBER OF #12 AWG UNGROUNDED CIRCUIT CONDUCTORS (HOT). LONGER CROSS–LINES INDICATE NUMBER OF #12 AWG GROUNDED CIRCUIT CONDUCTORS (NEUTRAL). CURVED LINE INDICATES 1#12 AWG GND FOR EQUIPMENT GROUNDING CONDUCTOR. NO CROSS–LINE INDICATES 2#12 WITH 1#12 GND UNLESS OTHERWISE NOTED. ALL CONDUIT 1/2" UNLESS OTHERWISE NOTED. OTHER CONDUCTOR SIZES AS NOTED. LETTERS INDICATE CABLE TYPES, SEE CABLE SCHEDULE.

SYMBOL	DESCRIPTION
A–1,3	HOMERUN TO PANELBOARD WITH CIRCUIT AS NOTED
IG	INDICATES ISOLATED GROUND CONDUCTOR
MC	CONDUIT, RIGID STEEL, UNDERGROUND
PVC	CONDUIT, POLYVINYL CHLORIDE, UNDERGROUND
	CONDUIT CONCEALED IN CEILING OR WALL
	CONDUIT CONCEALED IN FLOOR
	CONDUIT EXPOSED
	CONDUIT, FLEXIBLE
	CONDUIT, TURN UP
	CONDUIT, TURN DOWN
	CONDUIT SEAL, EXPLOSION–ROOF
X	CONDUIT, EXPANSION JOINT
	ADAPTER, ONE TYPE CONDUIT TO ANOTHER
	POLE
P	MANUAL PULL STATION
	SPEAKER/HORN
	STROBE
	COMBINATION HORN/STROBE
	HEAT DETECTOR
P	PHOTOELECTRIC SMOKE DETECTOR U=UNDERFLOOR, D=DECK MOUNTED
	DUCT SMOKE DETECTOR
	FIRE/SMOKE DAMPER
	TAMPER SWITCH
	FLOW SWITCH
PIV	POST INDICATOR VALVE
V	EXTERIOR BELL
KB	KNOX BOX
FACP	FIRE ALARM CONTROL PANEL
FAA	FIRE ALARM ANNUNCIATION PANEL
GB	GLASS BREAK DISCRIMINATOR
GB P	GLASS BREAK DISCRIMINATOR LOCATED IN UPPER PUBLIC AREA
	MAGNETIC CONTACT SWITCH–PEDESTRIAN DOOR
H	POWER TRANSFER DOOR HINGE
C	DIGITAL CARD READER
L	ELECTRIFIED LOCKSET
REX	REQUEST TO EXIT
K	KEYPAD FOR ALARM SYSTEM
MD	MOTION DETECTOR (MICROWAVE/PASSIVE INFRARED)
	CCTV CAMERA LOCATION
MON	CCTV MONITOR LOCATION
DVD	CCTV DVD LOCATION
	PULL BOX–LETTER INDICATES TYPE OF PULL BOX (E–ELECTRICAL, T–TELEPHONE, R–RADIO)
	PULL BOX (TRAFFIC–RATED)–LETTER INDICATES TYPE OF PULL BOX (E–ELECTRICAL, T–TELEPHONE, R–RADIO)
A / EE–2	– SECTION/ELEVATION LETTER – SHEET NUMBER
1 / EE–2	– DETAIL NUMBER – SHEET NUMBER

SYMBOL	DESCRIPTION
	CIRCUIT BREAKER, SINGLE–POLE
	CIRCUIT BREAKER, DOUBLE–POLE
	CIRCUIT BREAKER, THREE–POLE
GFCI	CIRCUIT BREAKER, WITH GROUND FAULT CIRCUIT INTERRUPTER
	CIRCUIT BREAKER, SINGLE–POLE, SWITCHED NEUTRAL
	CONTACT, NORMALLY OPEN
	CONTACT, NORMALLY CLOSED
	PUSHBUTTON SWITCH, NORMALLY CLOSED
	PUSHBUTTON SWITCH, NORMALLY OPEN
	SWITCH, SINGLE–POLE
	SWITCH, SINGLE–POLE, DOUBLE–THROW
	SWITCH, DOUBLE–POLE
	SWITCH, DOUBLE–POLE, DOUBLE–THROW
	SWITCH, SINGLE–POLE, 3–POSITION
	THERMAL OVERLOAD
	FUSE
	RESISTOR
	VARIABLE RESISTOR
	TRANSFORMER WINDING
	GROUNDING ELECTRODE
	ENCLOSURE BOND
	PILOT LIGHT (A=AMBER, G=GREEN, R=RED)
G	GENERATOR
M	MOTOR
M	FAN MOTOR

REMODEL WORK

SYMBOL TO REMAIN	SYMBOL REMOVE	DESCRIPTION
		EXISTING LED FIXTURE
		EXISTING SURFACE LED FIXTURE
X	X	EXISTING EXIT LIGHT
		EXISTING JUNCTION BOX
		EXISTING PANELBOARD
		EXISTING DISCONNECT
		EXISTING RECEPTACLE OUTLET
S	S	EXISTING SWITCH
OS	OS	EXISTING OCCUPANCY SENSOR
		EXISTING TELEPHONE OUTLET
		EXISTING DATA OUTLET
		EXISTING TELEPHONE/DATA OUTLET
		EXISTING STROBE
		EXISTING HORN/SPEAKER
		EXISTING COMBINATION HORN/STROBE
		EXISTING HEAT DETECTOR
		EXISTING SMOKE DETECTOR
		EXISTING CONDUIT AND CONDUCTORS – TO REMAIN UNLESS OTHERWISE NOTED
		EXISTING CONDUIT AND CONDUCTORS – REMOVE

IDENTIFICATION STAMP
DIV. OF THE STATE ARCHITECT
APP: 03-121324 INC: A
REVIEWED FOR
SS ☐ FLS ☐ ACS ☑
DATE: 09/14/2022

OFFICE OF THE STATE FIRE MARSHAL
APPROVED FIRE AND PANIC ONLY
09/07/22
21-0233
Approval of this plan does not authorize or approve any omission or deviation from applicable regulations. Final approval is subject to field inspection. One set of approved plans shall be available on the project site at all times.

DGS GENERAL SERVICES
Department of General Services
Architecture & Engineering Sections
State of California
Real Estate Services Division
Project Management & Development Branch
707 Third Street, Suite 4-105
West Sacramento, California 95605

REGISTERED PROFESSIONAL ENGINEER
JOSEPH H. ABDELSAYD
No. E-18915
ELECTRICAL
STATE OF CALIFORNIA

DMV
State of California
Department of Motor Vehicles

Issue

No.	Date	Description
1	9/2/22	

Project
SANTA MARIA FIELD OFFICE REPLACEMENT
2770 SANTA MARIA WAY
SANTA MARIA, CA 93455
SANTA BARBARA COUNTY
DEPT OF MOTOR VEHICLES

Supervisor	Designed	Drawn
J.ABDELSAYD	EEU	EEU

DSA App No. 03-121324
SFM Permit No. 21-S-0233-CP-ER

Sheet Title
ELECTRICAL LEGEND

Project Number
DGS000000140725

Reference North
Sheet Scale NONE
Sheet Number E001

1 SYMBOLS LIST — NO SCALE

RELATIVE BORDER SCALE IN INCHES 0 1 2 3

© Copyright © 2022, California Department of General Services - Real Estate Services Division

CAD File: X:\Projects\14xxxx\140725\DWG\PLTE001.dwg Plot Date: Jul 11, 2022 - 5:12pm Plotted by: jkelly

A

A	AMPERES
AC	ALTERNATING CURRENT OR ASPHALT CONCRETE
A/C	IR CONDITIONING
AFCI	ARC FAULT CIRCUIT INTERRUPTER
AFF	ABOVE FINISHED FLOOR
AI	ANALOG INPUT
AL	ALARM LIGHT
AO	ANALOG OUTPUT
AR	ALARM RESET
ATS	AUTOMATIC TRANSFER SWITCH
AVC	AIR VOLUME CONTROLLER

B

BC	BARE COPPER
BD	BUILDING DISCONNECT
BLDG	BUILDING
BP	BOOSTER PUMP
BRK	BREAKER

C

C	CONDUIT
CAT	CATEGORY
CB	CIRCUIT BREAKER
CCTV	CLOSED CIRCUIT TELEVISION
CD	CONTROL DISCONNECT
CKT	CIRCUIT
CL	CHAIN LINK
CLR	CLEAR/CLEARANCE
COMM	COMMUNICATION
CR	CONTROL RELAY
CS	CURRENT SWITCH
CT	CURRENT TRANSFORMER

D

DC	DIRECT CURRENT
DI	DIGITAL INPUT
DIA	DIAMETER
DMM	DIGITAL MULTIMETER
DO	DIGITAL OUTPUT
DP	DUPLEX PLUG RECEPTACLE
DS	DOOR SWITCH

E

(E)	EXISTING
EF	EXHAUST FAN
ELEV	ELEVATION

F

F	FUSE
FG	FINISH GRADE
FL	FAILURE LIGHT
FLA	FULL LOAD AMPERES
FLEX	FLEXIBLE CONDUIT
FLS	FLOW SWITCH
FO	FIBER OPTIC
FR	FAILURE RESET/FLAME RESISTANT
FS	FLOAT SWITCH

G

GA	GAUGE
GB	GROUND BAR
GBB	GROUND BUS BAR
GFCI	GROUND FAULT CIRCUIT INTERRUPTER
GND	GROUND
GRS	GALVANIZED RIGID STEEL

H

HP	HORSEPOWER
HPS	HIGH PRESSURE SODIUM

I

IC	IRRIGATION CONTROLLER
ICC	IRRIGATION CONTROLLER CABINET
IR	INDUCTION RELAY
ISR	INTRINSICALLY SAFE RELAY

J

J-BOX	JUNCTION BOX

K

KV	KILOVOLT
KVA	KILOVOLT AMPERES
KW	KILOWATT

L

L	LIGHT/LENGTH
LC	LIGHTING CONTACTOR
LCD	LIQUID CRYSTAL DISPLAY
LCP	LIGHTING CONTROL PANEL
LD	LIGHTING DISCONNECT
LED	LIGHT EMITTING DIODE
LL	LIQUID LEVEL RELAY
LLC	LIQUID LEVEL CONTROLLER
LP	LIGHT PANEL
LS	LIGHT SWITCH
LT	LIGHT TRANSFORMER
LTO	LIGHT TRANSFORMER OVERLOAD

M

MAX	MAXIMUM
MB	MAIN BREAKER
MC	METALLIC CONDUIT
MCA	MINIMUM CIRCUIT AMPACITY
MCP	MOTOR CIRCUIT PROTECTOR
MCC	MOTOR CONTROL CENTER
MD	MOTOR DISCONNECT
MH	MOUNTING HEIGHT
MIN	MINIMUM
MISC	MISCELLANEOUS
MSB	MAIN SWITCHBOARD
MT	EMPTY CONDUIT

N

(N)	NEW
NB	NEUTRAL BUS
NC	NORMALLY CLOSED
N.I.C.	NOT IN CONTRACT
NO.	NUMBER
NOS.	NUMBERS
NO	NORMALLY OPEN

O

O/C	ON CENTER
OG	ORIGINAL GROUND
OH	OVERHEAD
OL	OVERLOAD

P

P	POLE (CIRCUIT BREAKER)
PB	PULL BOX OR PUSHBUTTON
PCP	PUMP CONTROL PANEL
PD	PUMP DISCONNECT
PEC	PHOTOELECTRIC CONTROL
PFR	PHASE FAILURE RELAY
PFRD	PHASE FAILURE RELAY DISCONNECT
PL	PILOT LIGHT
PS	PRESSURE SWITCH
PTS	POWER TRANSFER SWITCH
PV	PHOTOVOLTAIC
PVC	POLYVINYL CHLORIDE

R

RES	RESISTOR
RSC	RIGID STEEL CONDUIT
RTB	RADIO TERMINAL BOARD

S

S	STARTER COIL
SCH	SCHEDULE
SD	SERVICE DISCONNECT
SEC	SECONDS
SFR	SEAL FAILURE RELAY
SPD	SPARE DISCONNECT
SPR	STANDBY POWER RECEPTACLE
SQ	SQUARE
SS	SELECTOR SWITCH
ST	STARTER
STD	STANDARD
SV	SOLENOID VALVE

T

TB	TERMINAL BLOCK
TC	TELEPHONE CABLE
TDR	TIME DELAY RELAY
TGB	TELECOMMUNICATIONS GROUND BUS BAR
TGLS	TOGGLE SWITCH
TM	TIME METER
TMGB	TELECOMMUNICATIONS MAIN GROUND BUS BAR
TOT	TOTAL
TS	TIMER SWITCH
TSW	TEST SWITCH
TTB	TELEPHONE TERMINAL BOARD
TYP	TYPICAL

U

UON	UNLESS OTHERWISE NOTED
UPS	UNINTERRUPTIBLE POWER SUPPLY

V

V	VOLT(S)
VAR	VARIABLE/VARIES

W

W	WATT/WIDTH
WLS	WATER LEVEL SWITCH
WP	WEATHERPROOF

X

XFMR	TRANSFORMER

1 ABBREVIATIONS — NO SCALE

2 GENERAL NOTES — NO SCALE

1. DIAGRAMMATICAL DRAWING: THE LOCATION OF LUMINAIRES ON THE DRAWING SHALL BE DEEMED DIAGRAMMATICAL. THE DRAWING SHALL NOT BE USED FOR PHYSICAL LOCATION OF THE LUMINIARES. DO NOT SCALE FROM PLANS.
2. LOCATION OF LUMINAIRES: REFER TO ARCHITECTURAL DRAWINGS.
3. DO NOT SCALE ELECTRICAL DRAWINGS FOR FIXTURES, DEVICES, OR APPLIANCE LOCATIONS. USE FIGURED DIMENSIONS IF GIVEN AND CHECK MECHANICAL AND ARCHITECTURAL PLANS.
4. CONDUITS SHALL BE INSTALLED CONCEALED UNLESS OTHERWISE SHOWN ON DRAWINGS.
5. PROVIDE CONDUIT SYSTEM TO ENSURE A NEAT AND PROPER FINAL INSTALLATION, WITH CONDUITS ROUTED TIGHT TO THE STRUCTURE AND PARALLEL TO OR PERPENDICULAR TO STRUCTURAL MEMBERS. AFTER INSTALLATION IS COMPLETE, PROPERLY CLEAN CONDUIT FITTINGS, J-BOXES AND SUPPORT BRACKETS.
6. ELECTRICAL MATERIAL SHALL BE NEW AND LISTED WITH THE UNDERWRITERS LABORATORIES, INC. (UL), SHALL MEET THEIR REQUIREMENTS, AND SHALL BEAR THEIR LABEL.
7. CONDUIT PENETRATIONS THROUGH FIRE RATED WALLS AND FLOORS SHALL BE SEALED WITH SUITABLE SEALANT TO MAINTAIN FIRE SEPARATION RATING. 3M MOLDABLE PUTTY, NELSON, OR EQUAL. PENTRATIONS OF WALLS AND WALL MEMBRANES REQUIRED TO HAVE A FIRE-RESISTANCE RATING SHALL BE PROTECTED WITH THROUGH-PENETRATION FIRE STOPS SUITABLE FOR THE METHOD OF PENETRATION. THROUGH-PENETRATION FIRE STOPS SHALL BE TESTED USING ASTM E-814. (CBC SECTIONS 712)
8. DO NOT INSTALL POWER OR TELEPHONE OUTLETS BACK-TO-BACK IN STUD WALLS. SEPARATE OUTLETS BY A WALL STUD.
9. DEVICE BOXES THAT OCCUR BACK-TO-BACK OR WITHIN 24" OF EACH OTHER IN A FIRE RATED AREA SHALL BE PROPERLY PROTECTED WITH A SUITABLE MATERIAL. 3M FIRE BARRIER MOLDABLE PUTTY, NELSON, OR EQUAL.
10. PROVIDE PARITY SIZED GROUND WIRE IN BRANCH CIRCUIT AND LIGHTING CONDUITS, WHETHER OR NOT SPECIFICALLY SHOWN. GROUNDING SHALL BE EXECUTED IN ACCORDANCE WITH APPLICABLE CODES. GREEN INSULATED COPPER GROUNDING SHALL BE PROVIDED TO EACH OUTLET, ENCLOSURE, DEVICES, FIXTURE, ETC. FOR THE ENTIRE WORK. THE RACEWAYS SHALL NOT BE USED FOR "EQUIPMENT GROUNDING".
11. WHERE ANCHORAGE DETAILS ARE NOT SHOWN ON THE DRAWING, THE FIELD INSTALLATION SHALL BE SUBJECT TO THE APPROVAL OF THE STATE IN WRITING.
12. CONDUITS AND CABLE TRAYS SHALL BE SUPPORTED AND BRACED IN ACCORDANCE WITH CEC, PLANS, AND AS APPROVED BY THE STATE.
13. CONTRACTOR SHALL PROVIDE A LABELING FOR EACH RECEPTACLE NOTING EACH CIRCUIT AND PANEL.
14. IT SHALL BE ASSUMED THAT ALL CONDUIT AND CONDUCTORS SHALL BE 1/2"C. WITH #12 CONDUCTORS U.O.N.
15. RECEPTACLE COVER PLATES, FLOOR SERVICE BOXES, AND FLOOR SERVICE FEEDS SHALL BE LABELED WITH CIRCUITRY DESIGNATIONS.
16. SEPARATE GROUNDED (NEUTRAL) CONDUCTOR. MUST BE USED FOR EACH 120-VOLT CIRCUIT UNLESS OTHERWISE NOTED.
17. HOMERUNS TO PANELBOARDS MUST BE INSTALLED AS SHOWN ON THE PLANS. HOMERUNS MUST NOT BE COMBINED.
18. A SINGLE INSULATED EQUIPMENT GROUNDING CONDUCTOR, SIZED, AS REQUIRED, MUST BE INSTALLED IN EACH CONDUIT RUN.

IDENTIFICATION STAMP
DIV. OF THE STATE ARCHITECT
APP: 03-121324 INC:
REVIEWED FOR
SS ☐ FLS ☐ ACS ☑
DATE: 09/14/2022

OFFICE OF THE STATE FIRE MARSHAL
APPROVED FIRE AND PANIC ONLY
09/07/22
21-0233
Approval of this plan does not authorize or approve any omission or deviation from applicable regulations. Final approval is subject to field inspection. One set of approved plans shall be available on the project site at all times.

DGS GENERAL SERVICES
Department of General Services
Architecture & Engineering Sections
State of California
Real Estate Services Division
Project Management & Development Branch
707 Third Street, Suite 4-105
West Sacramento, California 95605

REGISTERED PROFESSIONAL ENGINEER
JOSEPH H ABDELSAYED
No. E-18915
ELECTRICAL
STATE OF CALIFORNIA

DMV
State of California
Department of Motor Vehicles

Issue		
No.	Date	Description
1	9/2/22	

Project
SANTA MARIA FIELD OFFICE REPLACEMENT
2770 SANTA MARIA WAY
SANTA MARIA, CA 93455
SANTA BARBARA COUNTY

DEPT OF MOTOR VEHICLES

Supervisor	Designed	Drawn
J.ABDELSAYD	EEU	EEU

DSA App No.	SFM Permit No.
03-121324	21-S-0233-CP-ER

Sheet Title
ELECTRICAL ABBREVIATIONS & GENERAL NOTES

Project Number
DGS000000140725

Reference North	Sheet Scale
	NONE
	Sheet Number E002

Copyright © 2022, California Department of General Services - Real Estate Services Division

CAD File: X:\Projects\14xxxx\140725\DWG\PLTIE002.dwg Plot Date: Jul 11, 2022 - 5:12pm Plotted by: jkelly

RELATIVE BORDER SCALE IN INCHES 0 1 2 3

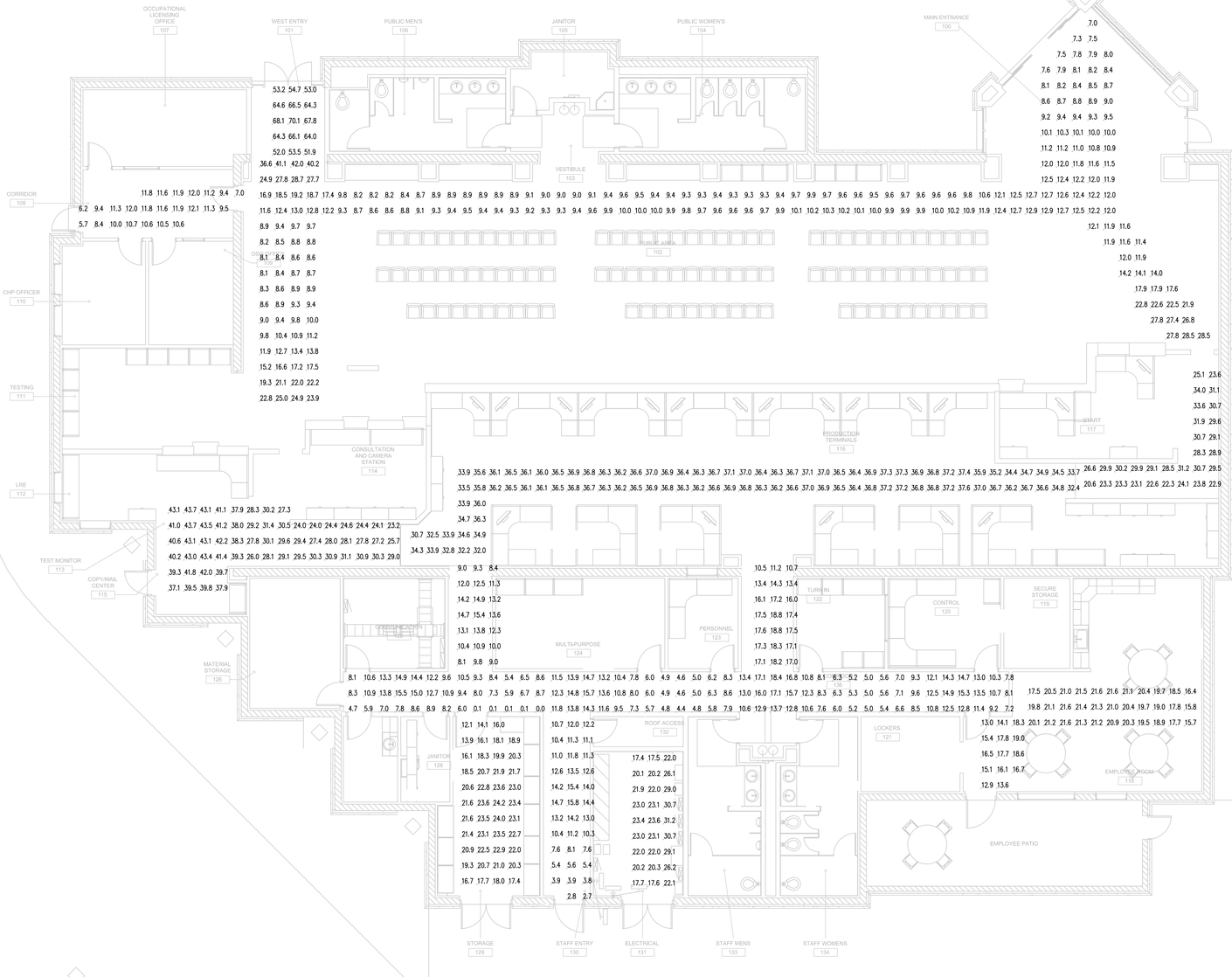

1 EGRESS PHOTOMETRIC PLAN - INTERIOR, NORMAL POWER

OUTPUT IN MAINTAINED FOOTCANDLES AS CALCULATED IN VISUAL LIGHTING 2020 RELEASE 2.11.0062 PHOTOMETRIC SOFTWARE

1/8"=1'-0"

2 STATISTICS

NO SCALE

corridor 108
Average	10.4	fc
Maximum	12.1	fc
Minimum	5.7	fc
Max/Min	2.1:1	
Average/Min	1.8:1	

electrical room egress
Average	23.2	fc
Maximum	31.2	fc
Minimum	17.4	fc
Max/Min	1.8:1	
Average/Min	1.3:1	

employee room egress path
Average	18.8	fc
Maximum	21.6	fc
Minimum	12.9	fc
Max/Min	1.7:1	
Average/Min	1.5:1	

production terminal area egress path
Average	35.9	fc
Maximum	37.6	fc
Minimum	30.7	fc
Max/Min	1.2:1	
Average/Min	1.2:1	

public area egress path
Average	12.3	fc
Maximum	42.0	fc
Minimum	7.0	fc
Max/Min	6.0:1	
Average/Min	1.8:1	

rear corridor
Average	10.4	fc
Maximum	18.8	fc
Minimum	0.0	fc
Max/Min	N/A	
Average/Min	N/A	

start area egress path
Average	27.6	fc
Maximum	34.0	fc
Minimum	20.6	fc
Max/Min	1.7:1	
Average/Min	1.3:1	

storage
Average	20.3	fc
Maximum	24.2	fc
Minimum	12.1	fc
Max/Min	2.0:1	
Average/Min	1.7:1	

test monitor area egress path
Average	33.9	fc
Maximum	43.7	fc
Minimum	23.2	fc
Max/Min	1.9:1	
Average/Min	1.5:1	

west entry
Average	60.9	fc
Maximum	70.1	fc
Minimum	51.9	fc
Max/Min	1.4:1	
Average/Min	1.2:1	

work area egress paths combined stats
Average	33.9	fc
Maximum	43.7	fc
Minimum	20.6	fc
Max/Min	2.1:1	
Average/Min	1.6:1	

IDENTIFICATION STAMP
DIV. OF THE STATE ARCHITECT
APP: 03-121324 INC:
REVIEWED FOR
SS ☐ FLS ☐ ACS ☑
DATE: 09/14/2022

OFFICE OF THE STATE FIRE MARSHAL
APPROVED FIRE AND PANIC ONLY
09/07/22
21-0233
Approval of this plan does not authorize or approve any omission or deviation from applicable regulations. Final approval is subject to field inspection. One set of approved plans shall be available on the project site at all times.

DGS GENERAL SERVICES
Department of General Services
Architecture & Engineering Sections
State of California
Real Estate Services Division
Project Management & Development Branch
707 Third Street, Suite 4-105
West Sacramento, California 95605

REGISTERED PROFESSIONAL ENGINEER JOSEPH H ABDELSAYED No. E-18915 ELECTRICAL STATE OF CALIFORNIA

DMV
State of California
Department of Motor Vehicles

Issue
No.	Date	Description
1	9/2/22	

Project
SANTA MARIA FIELD OFFICE REPLACEMENT
2770 SANTA MARIA WAY
SANTA MARIA, CA 93455
SANTA BARBARA COUNTY
DEPT OF MOTOR VEHICLES

Supervisor	Designed	Drawn
J.ABDELSAYD	J. KELLY	J. KELLY

DSA App No. 03-121324
SFM Permit No. 21-S-0233-CP-ER

Sheet Title
EGRESS PHOTO. PLAN - INTERIOR, NORMAL POWER

Project Number
DGS000000140725

Reference North

Sheet Scale
1/8" = 1'-0"

Sheet Number
E003

© Copyright 2022, California Department of General Services - Real Estate Services Division

CAD File: X:\Projects\14xxxx\140725\DWG\PLTE003 EGRESS PHOTOMETRIC PLAN.dwg Plot Date: Sep 02, 2022 - 2:38pm Plotted by: jkelly

24 X 36

RELATIVE BORDER SCALE IN INCHES 0 1 2 3

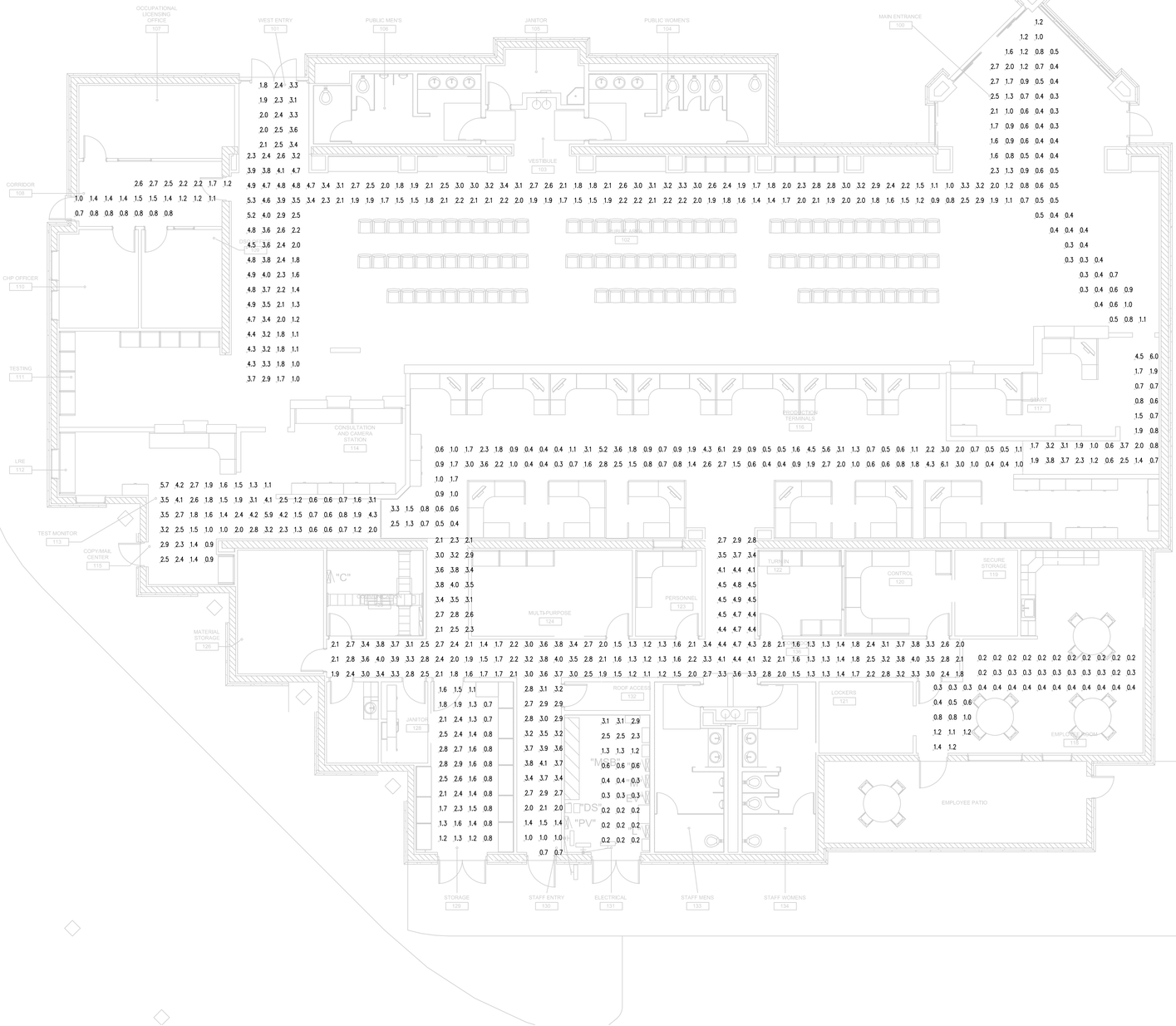

corridor 108
Average 1.4 fc
Maximum 2.7 fc
Minimum 0.7 fc
Max/Min 3.9:1
Average/Min 2.0:1

electrical room egress
Average 1.0 fc
Maximum 3.1 fc
Minimum 0.2 fc
Max/Min 15.5:1
Average/Min 5.0:1

employee room egress path
Average 0.4 fc
Maximum 1.4 fc
Minimum 0.2 fc
Max/Min 7.0:1
Average/Min 2.0:1

production terminal area egress path
Average 1.6 fc
Maximum 6.1 fc
Minimum 0.3 fc
Max/Min 20.3:1
Average/Min 5.3:1

public area egress path
Average 2.0 fc
Maximum 5.3 fc
Minimum 0.3 fc
Max/Min 17.7:1
Average/Min 6.7:1

public use egress paths combined stats
Average 2.0 fc
Maximum 5.3 fc
Minimum 0.3 fc
Max/Min 17.7:1
Average/Min 6.6:1

rear corridor
Average 2.7 fc
Maximum 4.9 fc
Minimum 0.7 fc
Max/Min 7.0:1
Average/Min 3.9:1

start area egress path
Average 1.9 fc
Maximum 6.0 fc
Minimum 0.6 fc
Max/Min 10.0:1
Average/Min 3.2:1

storage egress path
Average 1.6 fc
Maximum 2.9 fc
Minimum 0.7 fc
Max/Min 4.1:1
Average/Min 2.3:1

test monitor area egress path
Average 2.1 fc
Maximum 5.9 fc
Minimum 0.6 fc
Max/Min 9.8:1
Average/Min 3.5:1

west entry
Average 2.6 fc
Maximum 3.6 fc
Minimum 1.8 fc
Max/Min 2.0:1
Average/Min 1.4:1

work area egress paths combined stats
Average 1.8 fc
Maximum 6.1 fc
Minimum 0.3 fc
Max/Min 20.3:1
Average/Min 6.0:1

1 EGRESS PHOTOMETRIC PLAN - INTERIOR, EMERGENCY POWER — OUTPUT IN MAINTAINED FOOTCANDLES AS CALCULATED IN VISUAL LIGHTING 2020 RELEASE 2.11.0062 PHOTOMETRIC SOFTWARE — 1/8"=1'-0"

2 STATISTICS — NO SCALE

IDENTIFICATION STAMP
DIV. OF THE STATE ARCHITECT
APP: 03-121324 INC:
REVIEWED FOR
SS ☐ FLS ☐ ACS ☑
DATE: 09/14/2022

OFFICE OF THE STATE FIRE MARSHAL
APPROVED FIRE AND PANIC ONLY
09/07/22
21-0233
Approval of this plan does not authorize or approve any omission or deviation from applicable regulations. Final approval is subject to field inspection. One set of approved plans shall be available on the project site at all times.

DGS GENERAL SERVICES
Department of General Services
Architecture & Engineering Sections
State of California
Real Estate Services Division
Project Management & Development Branch
707 Third Street, Suite 4-105
West Sacramento, California 95605

REGISTERED PROFESSIONAL ENGINEER JOSEPH H ABDELSAYED No. E-18915 ELECTRICAL STATE OF CALIFORNIA

DMV
State of California
Department of Motor Vehicles

Issue

No.	Date	Description
1	9/2/22	

Project
SANTA MARIA FIELD OFFICE REPLACEMENT
2770 SANTA MARIA WAY
SANTA MARIA, CA 93455
SANTA BARBARA COUNTY

DEPT OF MOTOR VEHICLES

Supervisor	Designed	Drawn
J.ABDELSAYD	J. KELLY	J. KELLY

DSA App No. 03-121324
SFM Permit No. 21-S-0233-CP-ER

Sheet Title
EGRESS PHOTO. PLAN - INTERIOR, EMERGENCY POWER

Project Number
DGS000000140725

Reference North
Sheet Scale 1/8" = 1'-0"
Sheet Number E004

© Copyright 2022, California Department of General Services - Real Estate Services Division

CAD File: X:\Projects\14xxxx\140725\DWG\PLTE004.dwg Plot Date: Sep 02, 2022 - 2:38pm Plotted by: jkelly

RELATIVE BORDER SCALE IN INCHES 0 1 2 3

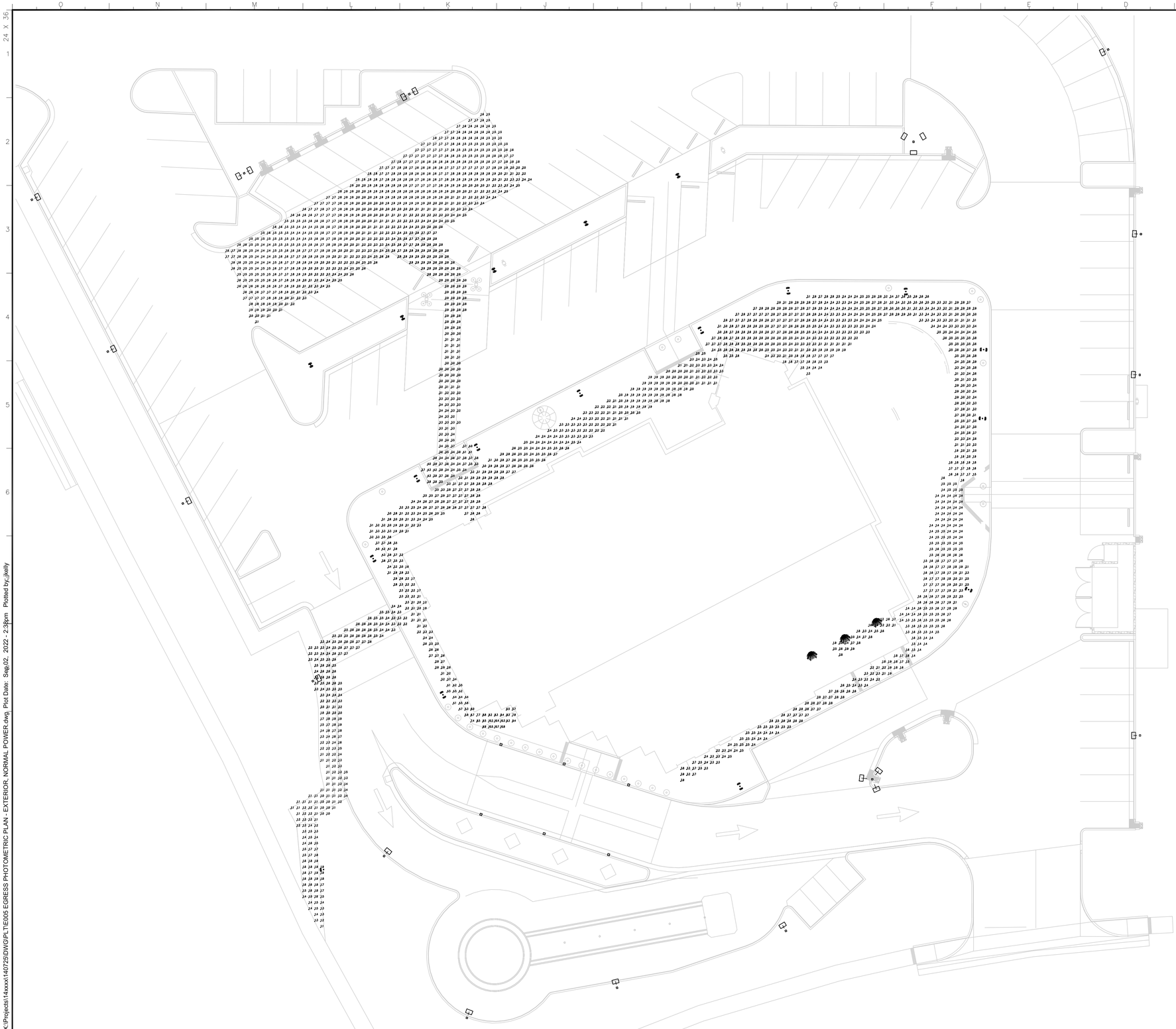

1 EGRESS PHOTOMETRIC PLAN - EXTERIOR, NORMAL POWER — OUTPUT IN MAINTAINED FOOTCANDLES AS CALCULATED IN VISUAL LIGHTING 2020 RELEASE 2.11.0062 PHOTOMETRIC SOFTWARE — 1/16"=1'-0"

2 STATISTICS — NO SCALE

general egress area 1		
Average	1.8	fc
Maximum	2.7	fc
Minimum	1.0	fc
Max/Min	2.7:1	
Average/Min	1.8:1	
general egress area 2		
Average	1.9	fc
Maximum	3.9	fc
Minimum	1.3	fc
Max/Min	3.0:1	
Average/Min	1.5:1	
general egress area 3		
Average	2.9	fc
Maximum	10.8	fc
Minimum	1.2	fc
Max/Min	9.0:1	
Average/Min	2.4:1	
general egress area 4		
Average	2.1	fc
Maximum	4.3	fc
Minimum	1.4	fc
Max/Min	3.1:1	
Average/Min	1.5:1	
general egress area 5		
Average	2.7	fc
Maximum	3.9	fc
Minimum	1.3	fc
Max/Min	3.0:1	
Average/Min	2.1:1	
general egress combined stats		
Average	2.3	fc
Maximum	10.8	fc
Minimum	1.0	fc
Max/Min	10.8:1	
Average/Min	2.3:1	
staff patio		
Average	2.3	fc
Maximum	2.9	fc
Minimum	1.2	fc
Max/Min	2.4:1	
Average/Min	1.9:1	

IDENTIFICATION STAMP
DIV. OF THE STATE ARCHITECT
APP: 03-121324 INC: A
REVIEWED FOR
SS ☐ FLS ☐ ACS ☑
DATE: 09/14/2022

OFFICE OF THE STATE FIRE MARSHAL
APPROVED FIRE AND PANIC ONLY
09/07/22
21-0233
Approval of this plan does not authorize or approve any omission or deviation from applicable regulations. Final approval is subject to field inspection. One set of approved plans shall be available on the project site at all times.

DGS GENERAL SERVICES
Department of General Services
Architecture & Engineering Sections
State of California
Real Estate Services Division
Project Management & Development Branch
707 Third Street, Suite 4-105
West Sacramento, California 95605

REGISTERED PROFESSIONAL ENGINEER
JOSEPH H ABDELSAYED
No. E-18915
ELECTRICAL
STATE OF CALIFORNIA

DMV
State of California
Department of Motor Vehicles

Issue		
No.	Date	Description
1	9/2/22	

Project
SANTA MARIA FIELD OFFICE REPLACEMENT
2770 SANTA MARIA WAY
SANTA MARIA, CA 93455
SANTA BARBARA COUNTY

DEPT OF MOTOR VEHICLES

Supervisor	Designed	Drawn
J.ABDELSAYD	J. KELLY	J. KELLY

DSA App No. 03-121324
SFM Permit No. 21-S-0233-CP-ER

Sheet Title
EGRESS PHOTO. PLAN - EXTERIOR, NORMAL POWER

Project Number
DGS000000140725

Reference North
Sheet Scale 1/16" = 1'-0"
Sheet Number E005

© Copyright © 2022, California Department of General Services - Real Estate Services Division

CAD File: X:\Projects\114xxxx\140725\DWG\PLTE005 EGRESS PHOTOMETRIC PLAN - EXTERIOR, NORMAL POWER.dwg Plot Date: Sep,02, 2022 - 2:38pm Plotted by:,jkelly

24 X 36

RELATIVE BORDER SCALE IN INCHES 0 1 2 3

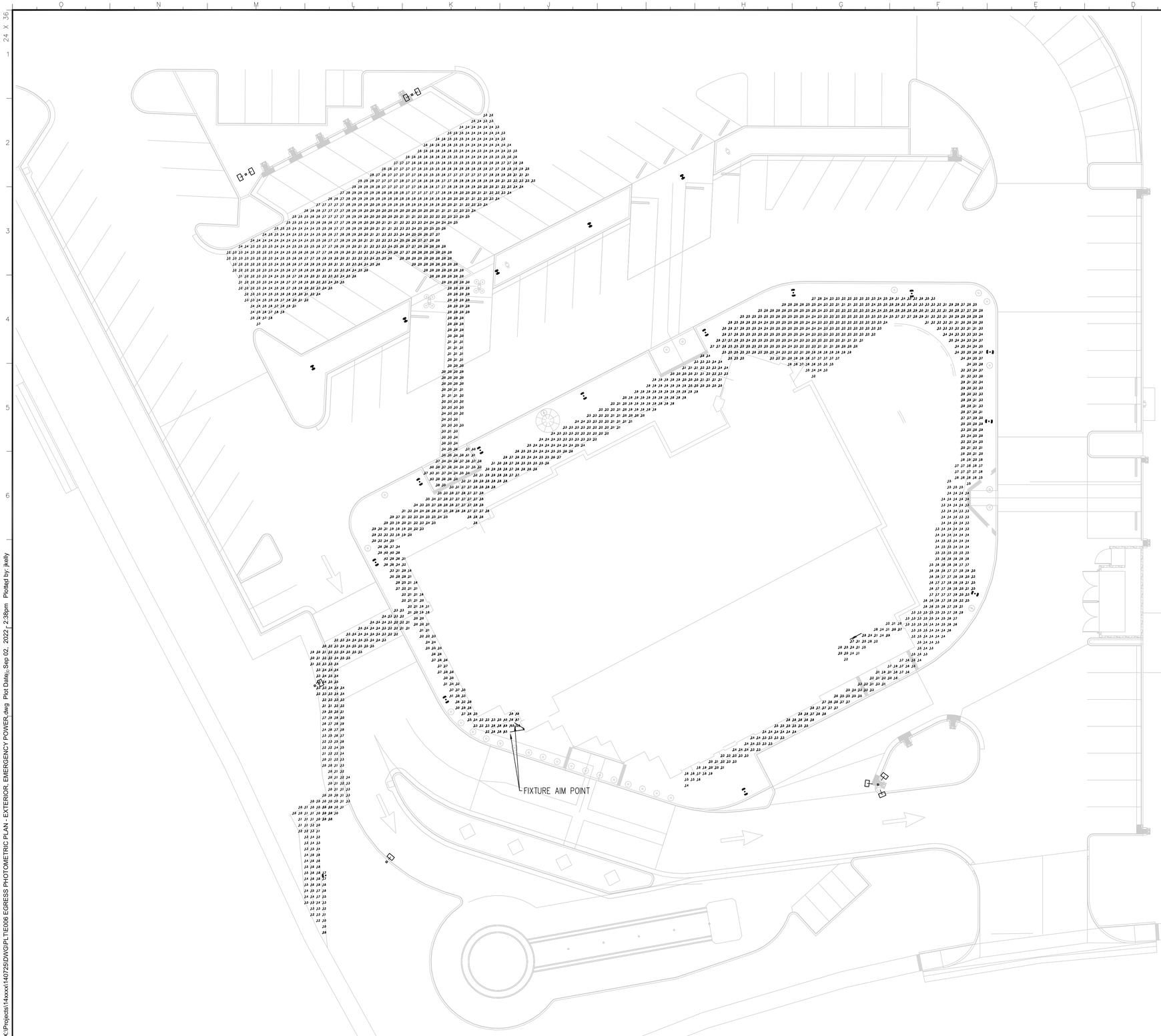

1 EGRESS PHOTOMETRIC PLAN - EXTERIOR, EMERGENCY POWER — OUTPUT IN MAINTAINED FOOTCANDLES AS CALCULATED IN VISUAL LIGHTING 2020 RELEASE 2.11.0062 PHOTOMETRIC SOFTWARE — 1/16"=1'-0"

2 STATISTICS — NO SCALE

general egress area 1

Average	1.7 fc
Maximum	2.5 fc
Minimum	0.8 fc
Max/Min	3.1:1
Average/Min	2.1:1

general egress area 2

Average	1.8 fc
Maximum	2.8 fc
Minimum	1.2 fc
Max/Min	2.3:1
Average/Min	1.5:1

general egress area 3

Average	2.6 fc
Maximum	12.5 fc
Minimum	1.1 fc
Max/Min	11.4:1
Average/Min	2.4:1

general egress area 4

Average	2.1 fc
Maximum	4.3 fc
Minimum	1.1 fc
Max/Min	3.9:1
Average/Min	1.9:1

general egress area 5

Average	2.5 fc
Maximum	3.8 fc
Minimum	1.2 fc
Max/Min	3.2:1
Average/Min	2.1:1

general egress combined stats

Average	2.2 fc
Maximum	12.5 fc
Minimum	0.8 fc
Max/Min	15.6:1
Average/Min	2.7:1

staff patio

Average	1.7 fc
Maximum	3.1 fc
Minimum	0.7 fc
Max/Min	4.4:1
Average/Min	2.4:1

IDENTIFICATION STAMP
DIV. OF THE STATE ARCHITECT
APP: 03-121324 INC: A
REVIEWED FOR
SS ☐ FLS ☐ ACS ☑
DATE: 09/14/2022

OFFICE OF THE STATE FIRE MARSHAL
APPROVED FIRE AND PANIC ONLY
09/07/22
21-0233
Approval of this plan does not authorize or approve any omission or deviation from applicable regulations. Final approval is subject to field inspection. One set of approved plans shall be available on the project site at all times.

DGS GENERAL SERVICES

Department of General Services
Architecture & Engineering Sections
State of California
Real Estate Services Division
Project Management & Development Branch
707 Third Street, Suite 4-105
West Sacramento, California 95605

REGISTERED PROFESSIONAL ENGINEER — JOSEPH H ABDELSAYED — No. E-18915 — ELECTRICAL — STATE OF CALIFORNIA

DMV State of California Department of Motor Vehicles

Issue

No.	Date	Description
1	9/2/22	

Project
SANTA MARIA FIELD OFFICE REPLACEMENT

2770 SANTA MARIA WAY
SANTA MARIA, CA 93455
SANTA BARBARA COUNTY

DEPT OF MOTOR VEHICLES

Supervisor	Designed	Drawn
J.ABDELSAYD	J. KELLY	J. KELLY

DSA App No.	SFM Permit No.
03-121324	21-S-0233-CP-ER

Sheet Title
EGRESS PHOTO. PLAN - EXTERIOR, EMERGENCY POWER

Project Number
DGS000000140725

Reference North | Sheet Scale 1/16" = 1'-0" | Sheet Number E006

© Copyright 2022, California Department of General Services - Real Estate Services Division

CAD File: X:\Projects\14xxxx\140725\DWG\PLTE006 EGRESS PHOTOMETRIC PLAN - EXTERIOR, EMERGENCY POWER.dwg Plot Date: Sep 02, 2022 - 2:38pm Plotted by: jkelly

RELATIVE BORDER SCALE IN INCHES 0 1 2 3

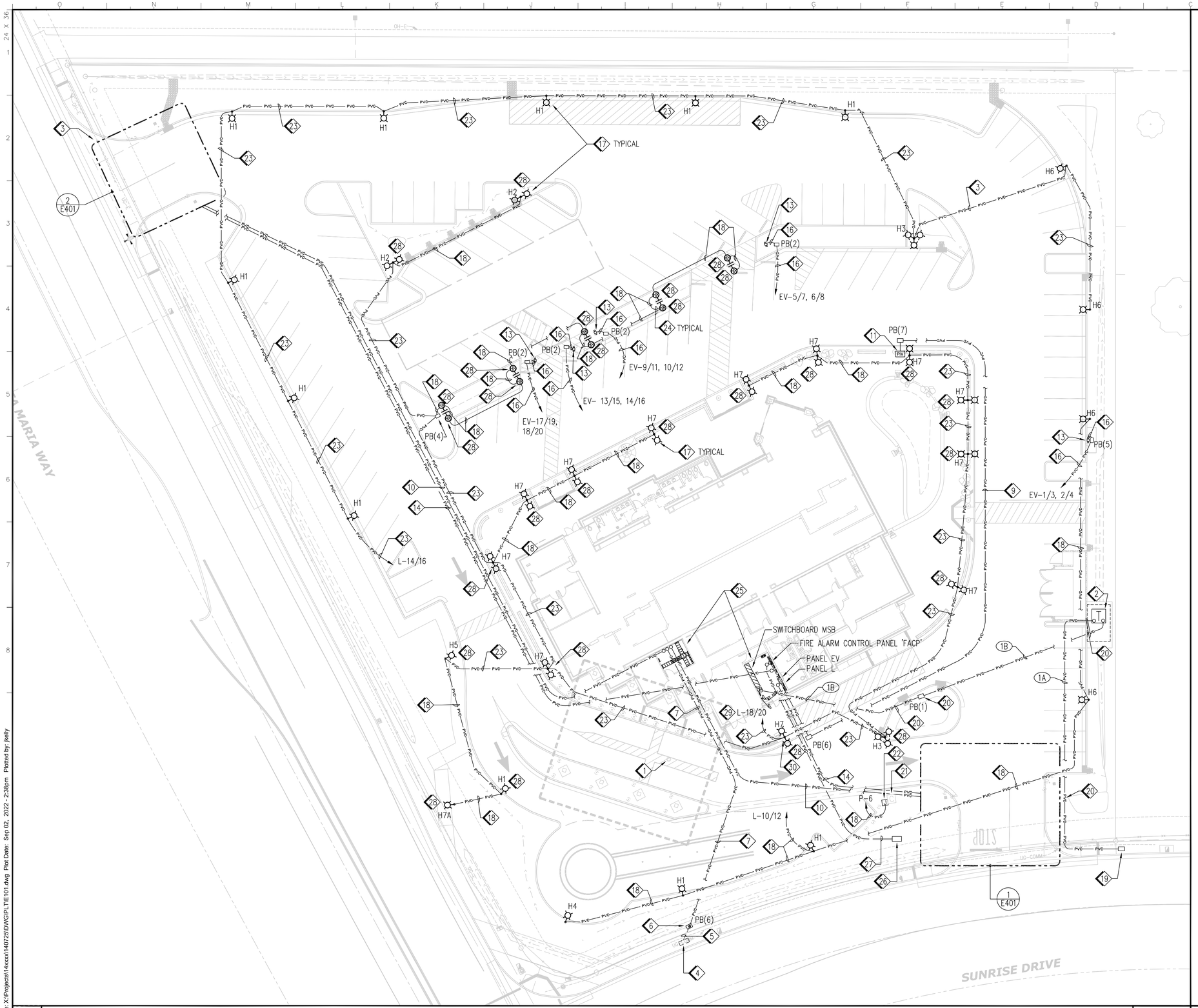

1. APPROXIMATE LOCATION OF EXISTING ABANDONED OIL WELL, KEEP CLEAR 10' WITH ALL WORK.
2. PG&E PAD MOUNTED TRANSFORMER. PROVIDE PAD, GROUNDING, ETC. PER PG&E REQUIREMENTS.
3. COORDINATE WITH UTILITY COMPANY ITEMS NECESSARY TO FACILITATE THE RELOCATION OF EXISTING UTILITY POLE, WHILE MAINTAINING THE CONTINUITY OF UTILITY SERVICE UPON COMPLETION. ALL APPLICABLE FEES AND PERMITS FOR THE RELOCATION OF THE EXISTING UTILITY POLE SHALL BE INCLUDED. COORDINATE WITH CIVIL SHEET C021.
4. EXISTING UTILITY MANHOLE.
5. EXISTING 1-4" CONDUIT FOR UTILITY COMPANY SERVICE.
6. INTERCEPT EXISTING 1-4" CONDUIT INSIDE NEW PULL BOX, AND EXTEND WITH PULL ROPE TO BUILDING COMMUNICATIONS ROOM 125.
7. 1-4" CONDUIT WITH 3/8" PULL ROPE FOR UTILITY COMPANY SERVICE.
8. NOT USED.
9. 1-1" CONDUIT WITH (2) #16 2-CONDUCTOR CABLES. TERMINATE CONDUCTOR AT FIRE ALARM CONTROL PANEL.
10. 1"C, WITH (1) CAT6 CABLE WITH CONNECTION TO 'TTB'.
11. FIRE ALARM POST INDICATOR VALVE.
12. NOT USED
13. ELECTRIC VEHICLE CHARGING STATION, DUAL HEAD, FREE STANDING, MOUNT PER 2/E501.
14. 3/4" C., (2) #10 & (1) #10 GND WITH CONNECTION TO P-31/33 & P-35/37.
15. 2" C, (8) #4 & (1) #4 GND.
16. 1-1/4" C, (4) #4 & (1) #4 GND.
17. TYPICAL AT EACH LIGHT POLE, SET TYPE 3 PULL BOX ADJACENT TO POLE BASE, LOCATE OUT OF TRAFFIC LANE, NOT SHOWN FOR CLARITY.
18. 3/4" C, (2) #10 & (1) #10 GND.
19. PG&E PULL BOX, BY PG&E. VERIFY EXACT LOCATION AND COORDINATE TERMINATION WITH PG&E.
20. KEEP CLEAR OF DRAINAGE SWALE, SEE 1/C402.
21. IRRIGATION CONTROLLER, SEE LANDSCAPE DRAWINGS, CONNECT AS REQUIRED.
22. WEATHERPROOF JUNCTION BOX, LOCATE ADJACENT TO IRRIGATION CONTROLLER.
23. 3/4"C, (2)#8 & (1)#8 GND.
24. ROUTE CONDUIT EXPOSED ON STRUCTURE.
25. INSTALL CONDUIT SEALS PER F/C708 ON ALL CONDUITS EXITING PANELS, EQUIPMENT, ETC. AND ROUTING UNDERGROUND, TYPICAL.
26. FIREWATER BACKFLOW PREVENTER WITH CONNECTION TO THE FIRE ALARM PANEL. PROVIDE MONITORING FOR THE FLOW OF WATER, AND OPERATION OF THE VALVE (TAMPER).
27. 3/4"C, (4)#14 WITH CONNECTION FROM BACKFLOW PREVENTER TO FIRE ALARM PANEL.
28. CONNECTED TO EMERGENCY POWER SOURCE.
29. VIA EXTERIOR EGRESS LIGHTING EMERGENCY POWER SYSTEM.
30. MAINTAIN 40" CLEAR OF SEAT WALL WITH POLE BASE AND PULL BOX TO ALLOW FOR WHEELCHAIR SPACE.

1 ELECTRICAL SITE PLAN — 1"=20'-0"

2 KEYED NOTES — NO SCALE

IDENTIFICATION STAMP
DIV. OF THE STATE ARCHITECT
APP: 03-121324 INC:
REVIEWED FOR
SS ☐ FLS ☐ ACS ☑
DATE: 09/14/2022

OFFICE OF THE STATE FIRE MARSHAL
APPROVED FIRE AND PANIC ONLY
09/07/22
21-0233
Approval of this plan does not authorize or approve any omission or deviation from applicable regulations. Final approval is subject to field inspection. One set of approved plans shall be available on the project site at all times.

DGS GENERAL SERVICES

Department of General Services
Architecture & Engineering Sections
State of California
Real Estate Services Division
Project Management & Development Branch
707 Third Street, Suite 4-105
West Sacramento, California 95605

REGISTERED PROFESSIONAL ENGINEER
JOSEPH H ABDELSAYED
No. E-18915
ELECTRICAL
STATE OF CALIFORNIA

DMV
State of California
Department of Motor Vehicles

Issue

No.	Date	Description
1	9/2/22	

Project
SANTA MARIA FIELD OFFICE REPLACEMENT
2770 SANTA MARIA WAY
SANTA MARIA, CA 93455
SANTA BARBARA COUNTY

DEPT OF MOTOR VEHICLES

Supervisor	Designed	Drawn
J.ABDELSAYD	EEU	EEU

DSA App No.	SFM Permit No.
03-121324	21-S-0233-CP-ER

Sheet Title
ELECTRICAL SITE PLAN

Project Number
DGS000000140725

Reference North | Sheet Scale 1" = 20'-0" | Sheet Number E101

© Copyright 2022, California Department of General Services - Real Estate Services Division

CAD File: X:\Projects\14xxxx\140725\DWG\PLTNE101.dwg Plot Date: Sep 02, 2022 - 2:38pm Plotted by: jkelly

24 X 36

RELATIVE BORDER SCALE IN INCHES 0 1 2 3

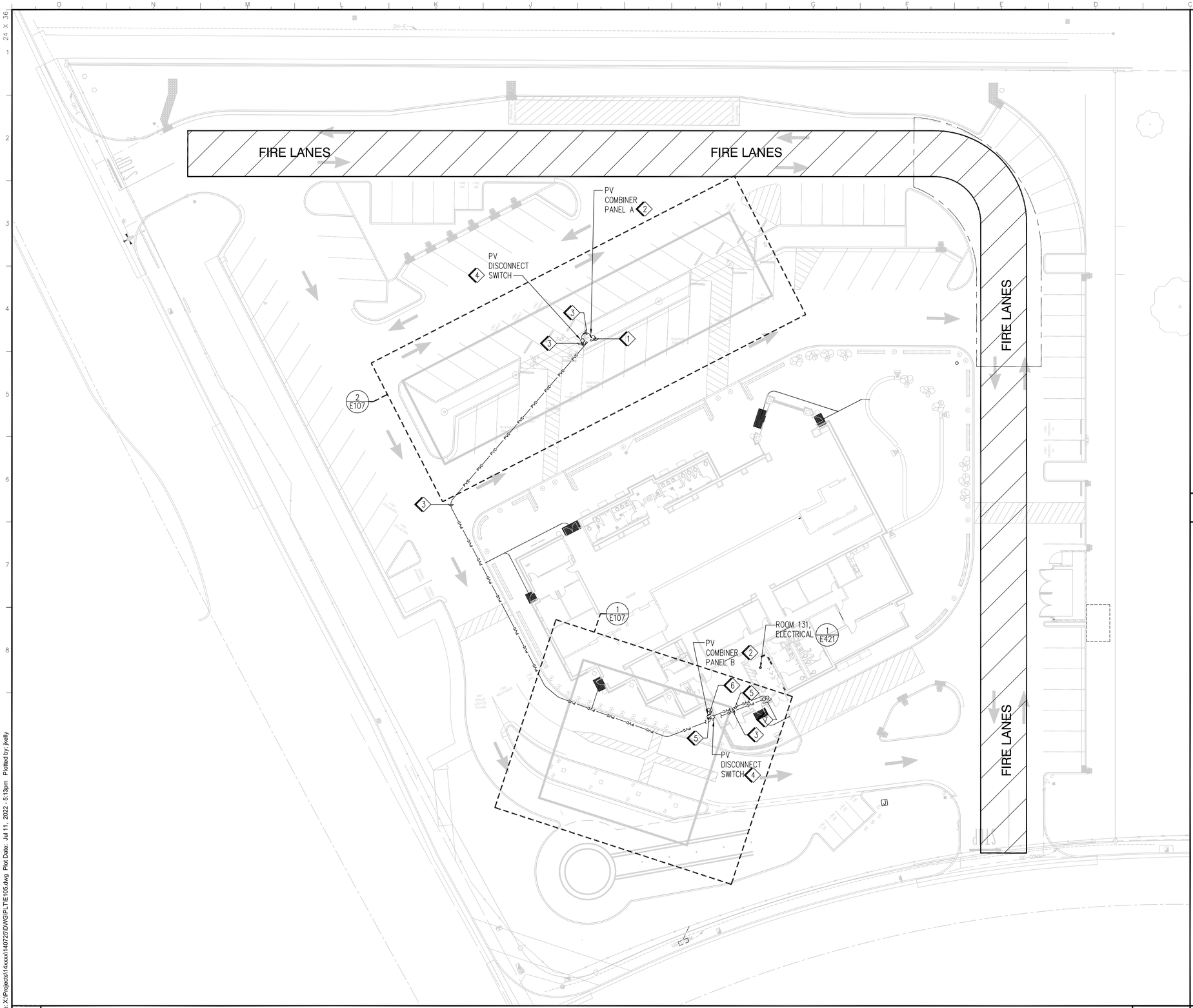

1 ELECTRICAL PHOTOVOLTAIC SITE PLAN

1"=20'-0"

A. FOR SINGLE LINE DIAGRAM OF PHOTOVOLTAIC, SEE SHEET E602.

B. FOR CONDUIT AND CONDUCTORS SCHEDULE OF PHOTOVOLTAIC, SEE SHEET E602.

SHEET NOTES

NO SCALE

1. (16) 3/4"C, RSC, 2#10, 1#10 GND
2. INSTALL PV COMBINER PANEL AT 18" ON THE COLUMN BELOW UNDERSIDE OF CANOPY.
3. 4"C, 4#400, 1#6 GND
4. INSTALL PV DISCONNECT SWITCH AT 48" ABOVE THE FINISH FLOOR ON THE COLUMN.
5. 4"C, 4#3/0, 1#6G GND
6. (12) 3/4"C, 2#10, 1#10 GND
7. TO 3-PHASE REVENUE GRADE GATEWAY ENCLOSURES. FOR CONTINUATION SEE DETAIL 1 ON SHEET E421.

2 KEYNOTES

NO SCALE

IDENTIFICATION STAMP
DIV. OF THE STATE ARCHITECT
APP: 03-121324 INC: A
REVIEWED FOR
SS ☐ FLS ☐ ACS ☑
DATE: 09/14/2022

OFFICE OF THE STATE FIRE MARSHAL
APPROVED FIRE AND PANIC ONLY
09/07/22
21-0233
Approval of this plan does not authorize or approve any omission or deviation from applicable regulations. Final approval is subject to field inspection. One set of approved plans shall be available on the project site at all times.

DGS GENERAL SERVICES

Department of General Services
Architecture & Engineering Sections
State of California
Real Estate Services Division
Project Management & Development Branch
707 Third Street, Suite 4-105
West Sacramento, California 95605

REGISTERED PROFESSIONAL ENGINEER TOMMY F. LEE No. E-18534 ELECTRICAL STATE OF CALIFORNIA

DMV
State of California
Department of Motor Vehicles

Issue

No.	Date	Description
1	9/2/22	

Project
SANTA MARIA FIELD OFFICE REPLACEMENT

2770 SANTA MARIA WAY
SANTA MARIA, CA 93455
SANTA BARBARA COUNTY

DEPT OF MOTOR VEHICLES

Supervisor	Designed	Drawn
J.ABDELSAYED	T.LEE	T.LEE

DSA App No.	SFM Permit No.
03-121324	21-S-0233-CP-ER

Sheet Title
ELECTRICAL PHOTOVOLTAIC SITE PLAN

Project Number
DGS000000140725

Reference North | Sheet Scale: AS SHOWN | Sheet Number: E105

© Copyright © 2022, California Department of General Services, Real Estate Services Division

CAD File: X:\Projects\14xxxx\140725\DWG\PLTE105.dwg Plot Date: Jul 11, 2022 - 5:13pm Plotted by: jkelly

RELATIVE BORDER SCALE IN INCHES 0 1 2 3

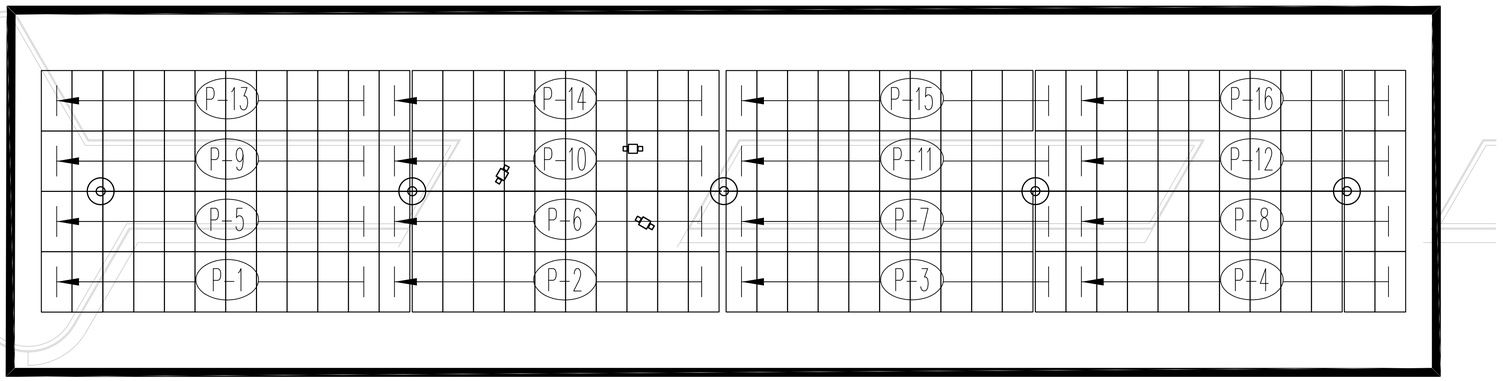

2 PARKING AREA PHOTOVOLTAIC CANOPY — 1/8" = 1'-0"

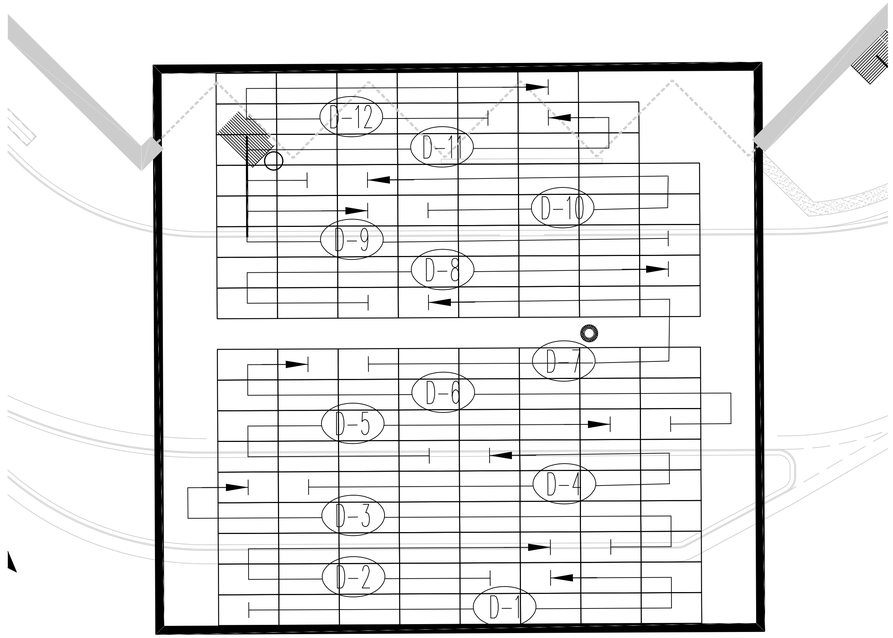

1 DRIVERS TEST CANOPY — 1/8" = 1'-0"

A. FOR CONDUIT AND CONDUCTORS SIZES, SEE SHEET E602.

B. FOR RACKING SYSTEM ON DRIVERS TEST CANOPY, SEE SHEETS E561 AND E562.

C. FOR PV SINGLE LINE DIAGRAM, SEE SHEET E602.

D. FOR DIMENSIONS OF PARKING AND DRIVERS TEST CANOPIES, SEE ARCHITECTURAL SHEETS.

E. PHOTOVOLTAIC SYSTEM INSTALLATION AND LABELING SHALL BE COMPLIED WITH REQUIREMENTS OF CALIFORNIA ELECTRICAL CODE 2019 ARTICLE 690.

4 GENERAL NOTES — NONE

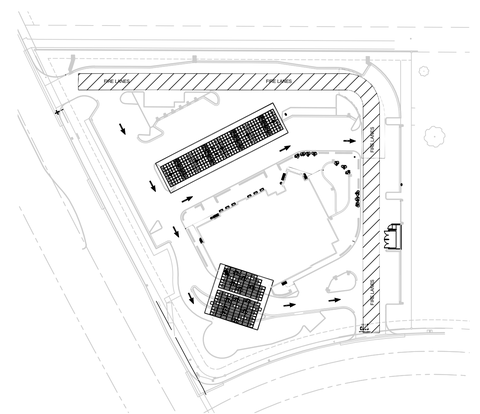

3 KEY PLAN — NONE

IDENTIFICATION STAMP
DIV. OF THE STATE ARCHITECT
APP: 03-121324 INC:
REVIEWED FOR
SS ☐ FLS ☐ ACS ☑
DATE: 09/14/2022

OFFICE OF THE STATE FIRE MARSHAL
APPROVED FIRE AND PANIC ONLY
09/07/22
21-0233
Approval of this plan does not authorize or approve any omission or deviation from applicable regulations. Final approval is subject to field inspection. One set of approved plans shall be available on the project site at all times.

DGS GENERAL SERVICES
Department of General Services
Architecture & Engineering Sections
State of California
Real Estate Services Division
Project Management & Development Branch
707 Third Street, Suite 4-105
West Sacramento, California 95605

REGISTERED PROFESSIONAL ENGINEER
TOMMY F. LEE
No. E-18534
ELECTRICAL
STATE OF CALIFORNIA

DMV
State of California
Department of Motor Vehicles

Issue		
No.	Date	Description
	9/2/22	

Project

Supervisor	Designed	Drawn
J.ABDELSAYED	T.LEE	T.LEE

DSA App No. | SFM Permit No.

Sheet Title: PHOTOVOLTAIC STRING LAYOUT PLAN

Project Number

Reference North | Sheet Scale: AS SHOWN | Sheet Number: E106

Copyright © 2022, California Department of General Services - Real Estate Services Division

CAD File: X:\Projects\114xxxx\140725\DWG\PLT\E106 PHOTOVOLTAIC STRING LAYOUT PLAN.dwg Plot Date: Jul 11, 2022 - 5:13pm Plotted by: jkelly

RELATIVE BORDER SCALE IN INCHES 0 1 2 3

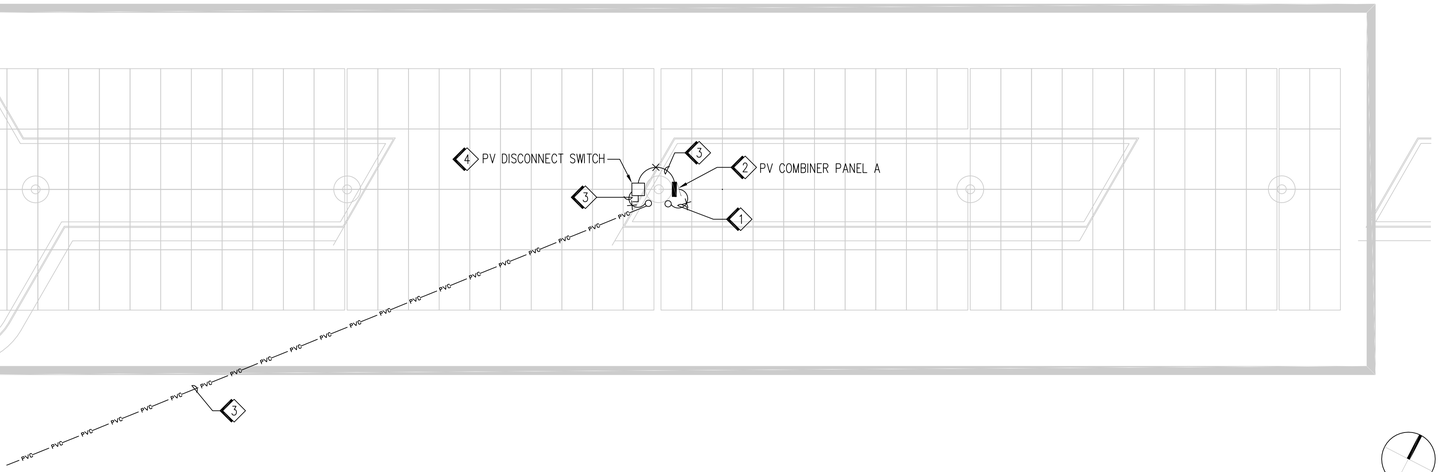

2 PARKING AREA PHOTOVOLTAIC CANOPY — 1/8" = 1'-0"

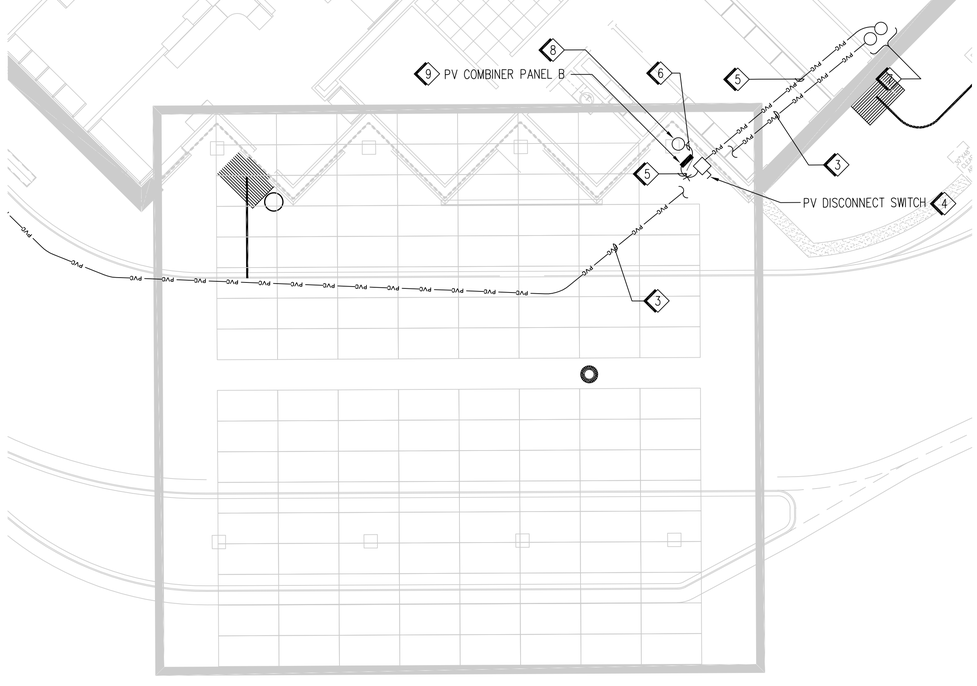

1 DRIVERS TEST CANOPY — 1/8" = 1'-0"

A. FOR SINGLE LINE DIAGRAM OF PHOTOVOLTAIC, SEE SHEET E602.

B. FOR CONDUIT AND CONDUCTORS SCHEDULE OF PHOTOVOLTAIC, SEE SHEET E602.

C. PHOTOVOLTAIC SYSTEM INSTALLATION AND LABELING SHALL BE COMPLIED WITH REQUIREMENTS OF CALIFORNIA ELECTRICAL CODE 2019 ARTICLE 690.

SHEET NOTES — NO SCALE

1. (16) 3/4"C, 2#10, 1#10 GND
2. INSTALL PV COMBINER PANEL A AT 18" ON THE COLUMN BELOW UNDERSIDE OF PARKING CANOPY.
3. 4"C, 4#400, 1#6 GND
4. INSTALL PV DISCONNECT SWITCH AT 48" ABOVE THE FINISH FLOOR ON THE COLUMN.
5. 4"C, 4#3/0, 1#6G GND
6. (12) 3/4"C, 2#10, 1#10 GND
7. TO 3-PHASE REVENUE GRADE GATEWAY ENCLOSURES. FOR CONTINUATION SEE DETAIL 1 ON SHEET E421.
8. ALL CONDUITS THROUGH THE ROOF SHALL BE INSTALLED WITH CONDUIT PENERTRATION FLASHING. SEE DETAIL ON 7/A531 FOR MOUNTING DETAIL.
9. INSTALL PV COMBINER PANEL B AT 18" ON THE COLUMN BELOW UNDERSIDE OF DRIVERS TEST CANOPY.

4 KEYNOTES — NONE

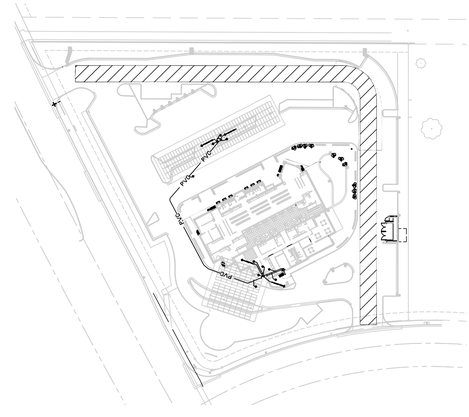

3 KEY PLAN — NONE

IDENTIFICATION STAMP
DIV. OF THE STATE ARCHITECT
APP: 03-121324 INC:
REVIEWED FOR
SS ☐ FLS ☐ ACS ☑
DATE: 09/14/2022

OFFICE OF THE STATE FIRE MARSHAL
APPROVED FIRE AND PANIC ONLY
09/07/22
21-0233
Approval of this plan does not authorize or approve any omission or deviation from applicable regulations. Final approval is subject to field inspection. One set of approved plans shall be available on the project site at all times.

DGS GENERAL SERVICES
Department of General Services
Architecture & Engineering Sections
State of California
Real Estate Services Division
Project Management & Development Branch
707 Third Street, Suite 4-105
West Sacramento, California 95605

REGISTERED PROFESSIONAL ENGINEER TOMMY F. LEE No. E-18534 ELECTRICAL STATE OF CALIFORNIA

DMV
State of California
Department of Motor Vehicles

Issue		
No.	Date	Description
1	9/2/22	

Project
SANTA MARIA FIELD OFFICE REPLACEMENT
2770 SANTA MARIA WAY
SANTA MARIA, CA 93455
SANTA BARBARA COUNTY

DEPT OF MOTOR VEHICLES

Supervisor	Designed	Drawn
J.ABDELSAYED	T.LEE	T.LEE

DSA App No.	SFM Permit No.
03-121324	21-S-0233-CP-ER

Sheet Title
PHOTOVOLTAIC CONDUIT ROUTING PLAN

Project Number
DGS000000140725

Reference North | Sheet Scale: AS SHOWN | Sheet Number: E107

Copyright © 2022, California Department of General Services - Real Estate Services Division

RELATIVE BORDER SCALE IN INCHES 0 1 2 3

CAD File: X:\Projects\144xxxx\140725\DWG\PLTIE107 PHOTOVOLTAIC CONDUIT ROUTING PLAN.dwg Plot Date: Jul 11, 2022 - 5:14pm Plotted by: jkelly

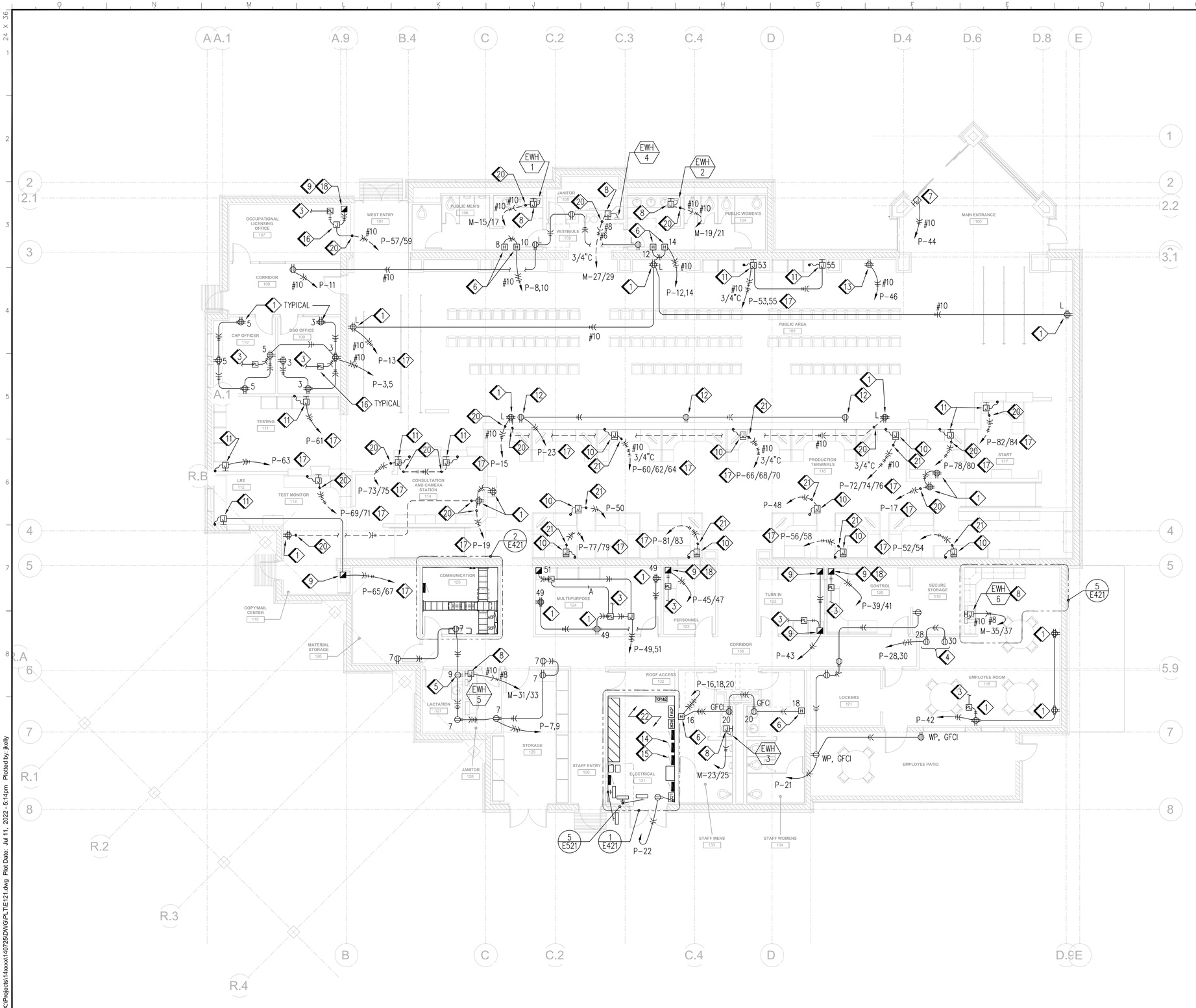

1 POWER PLAN — 1/8"=1'-0"

2 KEYED NOTES — NO SCALE

1. FOURPLEX RECEPTACLE WITH (1) CONTROLLED & (1) UNCONTROLLED DUPLEX, SEE 1/E521 & 1/E632.
2. NOT USED
3. 1/2"C, (1)A, TO LIGHTING CONTROLS FOR THIS ROOM.
4. +60" FOR VENDING MACHINE.
5. +18" FOR UNDER COUNTER REFRIGERATOR.
6. ELECTRIC HAND DRYER, COORDINATE EXACT MOUNTING LOCATION WITH EQUIPMENT SUPPLIER, CONNECT AS REQUIRED. NOTE THAT CIRCUIT BREAKER IS EQUIPPED WITH PADLOCKING TABS NEGATING NEED FOR LOCAL DISCONNECTING MEANS.
7. DOOR OPERATOR, COORDINATE EXACT MOUNTING LOCATION WITH EQUIPMENT SUPPLIER, CONNECT AS REQUIRED. NOTE THAT CIRCUIT BREAKER IS EQUIPPED WITH PADLOCKING TABS NEGATING NEED FOR LOCAL DISCONNECTING MEANS.
8. ELECTRIC WATER HEATER, COORDINATE EXACT MOUNTING LOCATION WITH EQUIPMENT SUPPLIER, CONNECT AS REQUIRED. NOTE THAT CIRCUIT BREAKER IS EQUIPPED WITH PADLOCKING TABS NEGATING NEED FOR LOCAL DISCONNECTING MEANS.
9. MODULAR SYSTEM FURNITURE POWER POLE CONNECTION POINT, SEE 2/E512.
10. MODULAR SYSTEM FURNITURE FLOOR PEDESTAL CONNECTION POINT, SEE 1/E512.
11. MODULAR SYSTEM FURNITURE WALL BOX CONNECTION POINT, SEE 3/E512.
12. CONTROLLED DUPLEX RECEPTACLE IN FACE OF SOFFIT FOR QUEUE SYSTEM MONITOR, LOCATE ADJACENT TO MONITOR DATA OUTLET, SEE 1/E161.
13. +36" FOR DMV EQUIPMENT.
14. PANEL P.
15. PANEL M.
16. MOUNTED ABOVE CEILING.
17. ROUTE VIA RECEPTACLE CONTROL RELAY PANEL, SEE 3/E632.
18. (1) LEG CONTROLLED, (1) LEG UNCONTROLLED.
19. NOT USED
20. INSTALL CONDUIT SEAL PER F/C708 WITHIN WALL, PROVIDE ACCESS DOOR.
21. INSTALL CONDUIT SEAL PER F/C708 BELOW RAISED FLOOR.
22. INSTALL CONDUIT SEALS PER F/C708 ON ALL CONDUITS EXITING PANELS AND ROUTING UNDERGROUND.

IDENTIFICATION STAMP
DIV. OF THE STATE ARCHITECT
APP: 03-121324 INC:
REVIEWED FOR
SS ☐ FLS ☐ ACS ☑
DATE: 09/14/2022

OFFICE OF THE STATE FIRE MARSHAL
APPROVED FIRE AND PANIC ONLY
09/07/22
21-0233
Approval of this plan does not authorize or approve any omission or deviation from applicable regulations. Final approval is subject to field inspection. One set of approved plans shall be available on the project site at all times.

DGS GENERAL SERVICES

Department of General Services
Architecture & Engineering Sections
State of California
Real Estate Services Division
Project Management & Development Branch
707 Third Street, Suite 4-105
West Sacramento, California 95605

REGISTERED PROFESSIONAL ENGINEER
JOSEPH ABDELSAYED
No. E-18915
ELECTRICAL
STATE OF CALIFORNIA

DMV
State of California
Department of Motor Vehicles

Issue		
No.	Date	Description
1	9/2/22	

Project
SANTA MARIA FIELD OFFICE REPLACEMENT
2770 SANTA MARIA WAY
SANTA MARIA, CA 93455
SANTA BARBARA COUNTY

DEPT OF MOTOR VEHICLES

Supervisor	Designed	Drawn
J.ABDELSAYD	J. KELLY	J. KELLY

DSA App No.	SFM Permit No.
03-121324	21-S-0233-CP-ER

Sheet Title
POWER PLAN

Project Number
DGS000000140725

Reference North

Sheet Scale
1/8" = 1'-0"

Sheet Number
E121

Copyright © 2022, California Department of General Services - Real Estate Services Division

CAD File: X:\Projects\14xxxx\140725\DWG\PLTE121.dwg Plot Date: Jul 11, 2022 - 5:14pm Plotted by: jkelly

RELATIVE BORDER SCALE IN INCHES 0 1 2 3

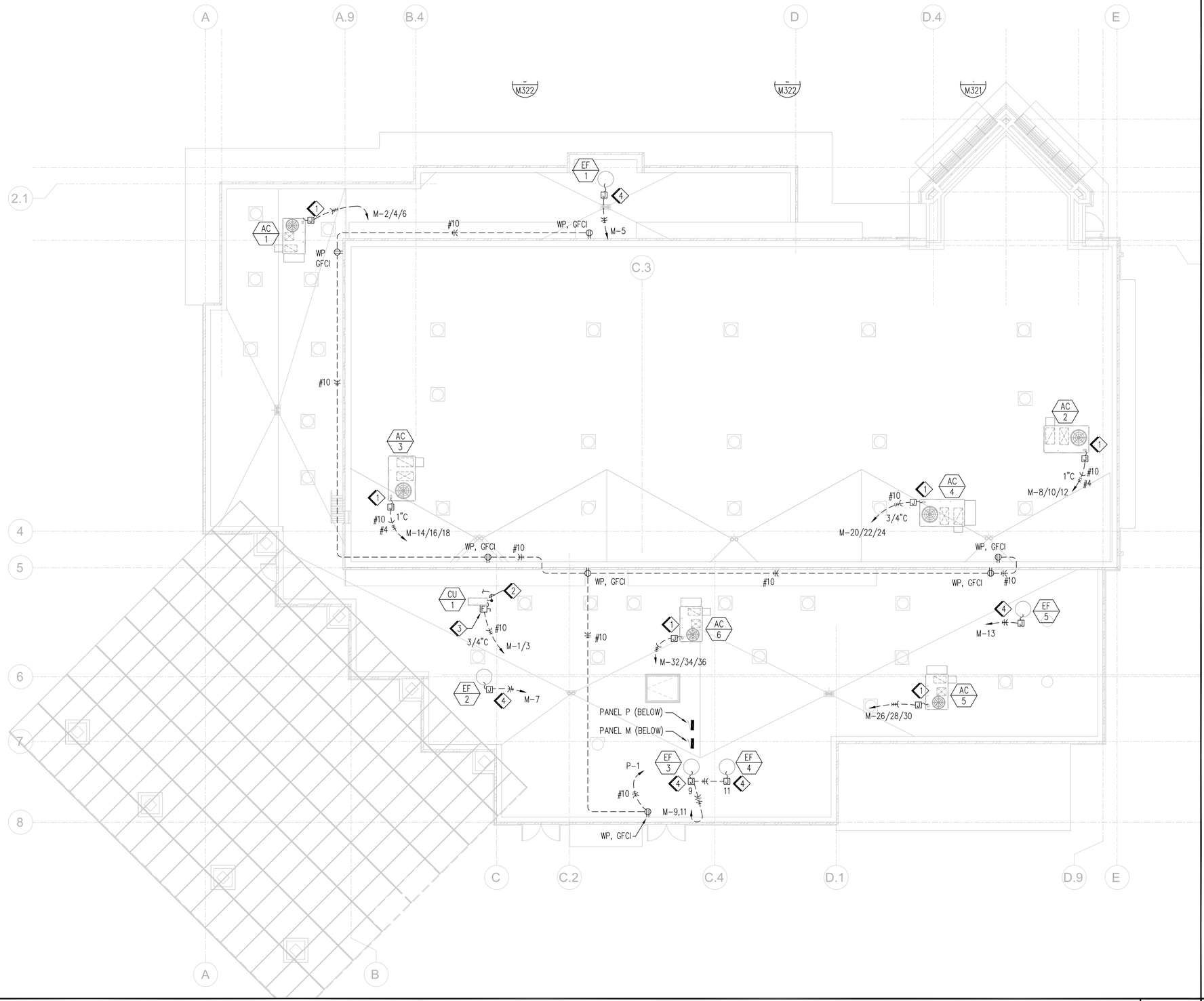

1 UNIT FURNISHED WITH INTEGRAL DISCONNECT SWITCH & THROUGH-BASE ELECTRICAL FEED POINT, AND FED BY HACR RATED CIRCUIT BREAKER. SET JUNCTION BOX BELOW ROOF AND CONTINUE TO UNIT WITH FLEXIBLE CONDUIT.

2 1/2"C, (3)#12 & (1)#12 GND. DOWN TO FC-1, SEE 2/E421.

3 30A/2P WEATHERPROOF SWITCH WITH FUSES SIZED PER UNIT NAMEPLATE.

4 UNIT FURNISHED WITH INTEGRAL DISCONNECT SWITCH AND THROUGH-BASE ELECTRICAL FEED POINT. SET JUNCTION BOX BELOW ROOF AND CONTINUE TO UNIT WITH FLEXIBLE CONDUIT.

1 ROOF POWER PLAN — 1/8"=1'-0"

4 KEYED NOTES — NO SCALE

IDENTIFICATION STAMP
DIV. OF THE STATE ARCHITECT
APP: 03-121324 INC:
REVIEWED FOR
SS ☐ FLS ☐ ACS ☑
DATE: 09/14/2022

OFFICE OF THE STATE FIRE MARSHAL
APPROVED FIRE AND PANIC ONLY
09/07/22
21-0233
Approval of this plan does not authorize or approve any omission or deviation from applicable regulations. Final approval is subject to field inspection. One set of approved plans shall be available on the project site at all times.

DGS GENERAL SERVICES

Department of General Services
Architecture & Engineering Sections
State of California
Real Estate Services Division
Project Management & Development Branch
707 Third Street, Suite 4-105
West Sacramento, California 95605

REGISTERED PROFESSIONAL ENGINEER
JOSEPH H ABDELSAYD
No. E-18915
ELECTRICAL
STATE OF CALIFORNIA

DMV
State of California
Department of Motor Vehicles

Issue

No.	Date	Description
1	9/2/22	

Project
SANTA MARIA FIELD OFFICE REPLACEMENT

2770 SANTA MARIA WAY
SANTA MARIA, CA 93455
SANTA BARBARA COUNTY

DEPT OF MOTOR VEHICLES

Supervisor	Designed	Drawn
J.ABDELSAYD	J. KELLY	J. KELLY

DSA App No.	SFM Permit No.
03-121324	21-S-0233-CP-ER

Sheet Title
ROOF POWER PLAN

Project Number
DGS000000140725

Reference North

Sheet Scale
1/8" = 1'-0"

Sheet Number
E122

Copyright © 2022, California Department of General Services - Real Estate Services Division

RELATIVE BORDER SCALE IN INCHES 0 1 2 3

CAD File: X:\Projects\14xxxx\140725\DWG\PLTE122.dwg Plot Date: Jul 11, 2022 - 5:14pm Plotted by: jkelly

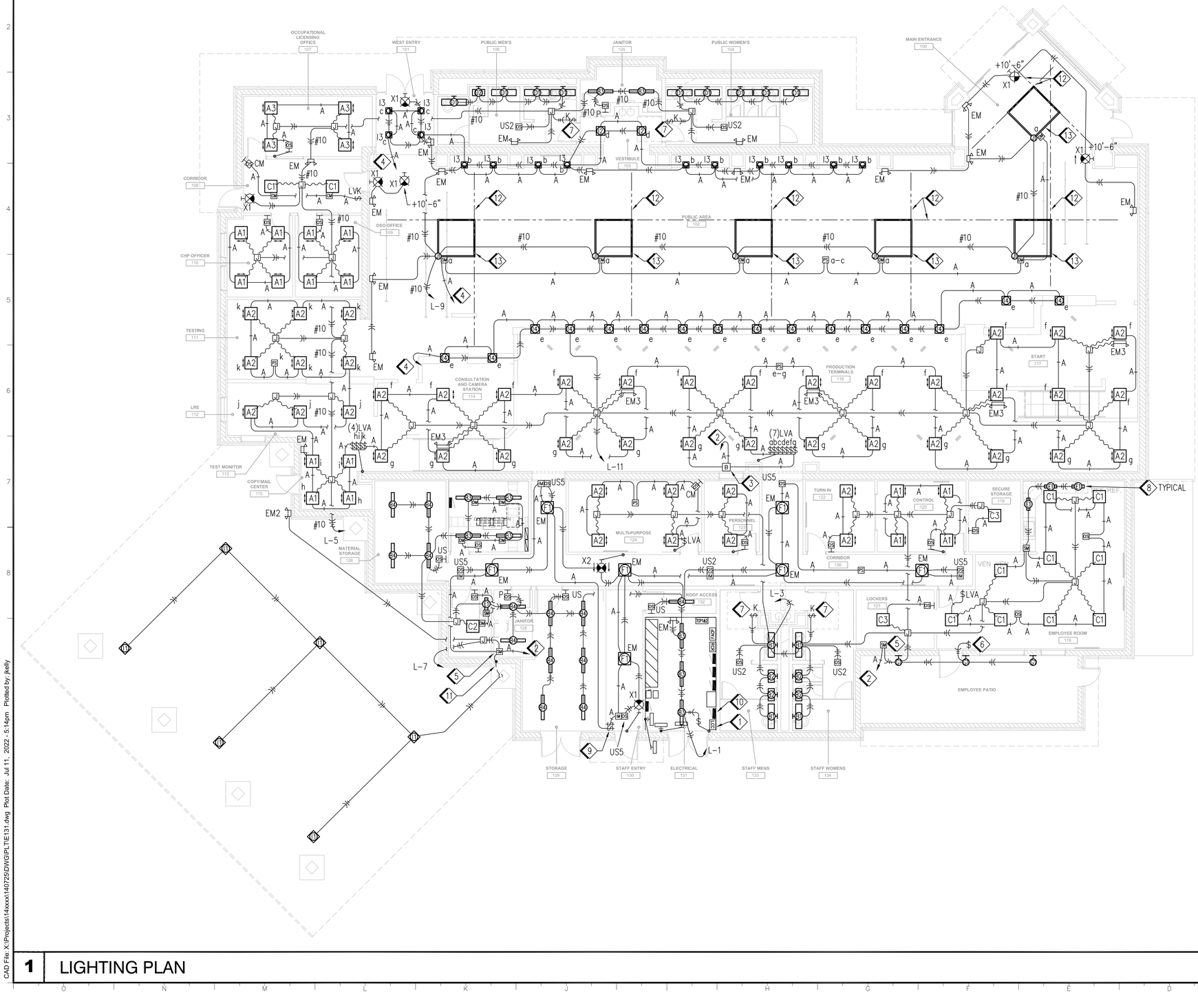

1. LIGHTING CONTROL SYSTEM CONTROL UNIT, MOUNT ON WALL.
2. HOMERUN TO LIGHTING CONTROL SYSTEM CONTROL UNIT.
3. LIGHTING CONTROL SYSTEM BRIDGE UNIT, MOUNT HIGH ON WALL.
4. HOMERUN TO LIGHTING CONTROL SYSTEM BRIDGE UNIT.
5. MOUNT ABOVE CEILING.
6. CONNECT SWITCH IN SERIES WITH LIGHTING CONTROL SYSTEM SWITCHING MODULE.
7. MAINTENANCE SWITCH, CONNECT IN SERIES WITH OCCUPANCY SENSOR, LABEL "AUTO" & "OFF".
8. FIXTURE EQUIPPED WITH INTEGRAL ROCKER SWITCH WHICH OPERATES IN SERIES WITH SWITCHING MODULE.
9. LED SKYLIGHT LOUVER & INTENSITY/CCT CONTROL SWITCHES, SEE MANUFACTURER'S INSTALLATION INSTRUCTIONS.
10. PANEL L.
11. DROP DOWN IN WALL, ROUTE UNDERGROUND TO COLUMN, THEN UP COLUMN TO CANOPY.
12. LIGHT FIXTURE SEISMIC SWAY BRACING, SEE 2/E531.
13. FIXTURE WIRING SHOWN DIAGRAMMATICALLY – FIXTURE HAS REMOTE DRIVER, MOUNT DRIVER ABOVE LOWER CEILING IN PRODUCTION TERMINAL AREA & EXTEND DRIVER OUTPUT TO FIXTURE WITH #12 AWG.

1 LIGHTING PLAN — 1/8"=1'-0"

2 KEYED NOTES — NO SCALE

IDENTIFICATION STAMP
DIV. OF THE STATE ARCHITECT
APP: 03-121324 INC:
REVIEWED FOR
SS ☐ FLS ☐ ACS ☑
DATE: 09/14/2022

OFFICE OF THE STATE FIRE MARSHAL
APPROVED FIRE AND PANIC ONLY
09/07/22
21-0233
Approval of this plan does not authorize or approve any omission or deviation from applicable regulations. Final approval is subject to field inspection. One set of approved plans shall be available on the project site at all times.

DGS GENERAL SERVICES

Department of General Services
Architecture & Engineering Sections
State of California
Real Estate Services Division
Project Management & Development Branch
707 Third Street, Suite 4-105
West Sacramento, California 95605

REGISTERED PROFESSIONAL ENGINEER
JOSEPH H ABDELSAYD
No. E-18915
ELECTRICAL
STATE OF CALIFORNIA

State of California
Department of Motor Vehicles

Issue		
No.	Date	Description
1	9/2/22	

Project
SANTA MARIA FIELD OFFICE REPLACEMENT

2770 SANTA MARIA WAY
SANTA MARIA, CA 93455
SANTA BARBARA COUNTY

DEPT OF MOTOR VEHICLES

Supervisor	Designed	Drawn
J.ABDELSAYD	J. KELLY	J. KELLY

DSA App No. 03-121324
SFM Permit No. 21-S-0233-CP-ER

Sheet Title
LIGHTING PLAN

Project Number
DGS000000140725

Reference North
Sheet Scale 1/8" = 1'-0"
Sheet Number E131

Copyright © 2022, California Department of General Services - Real Estate Services Division

CAD File: X:\Projects\14xxxx\140725\DWG\PLTNE131.dwg Plot Date: Jul 11, 2022 - 5:14pm Plotted by: jkelly

RELATIVE BORDER SCALE IN INCHES 0 1 2 3

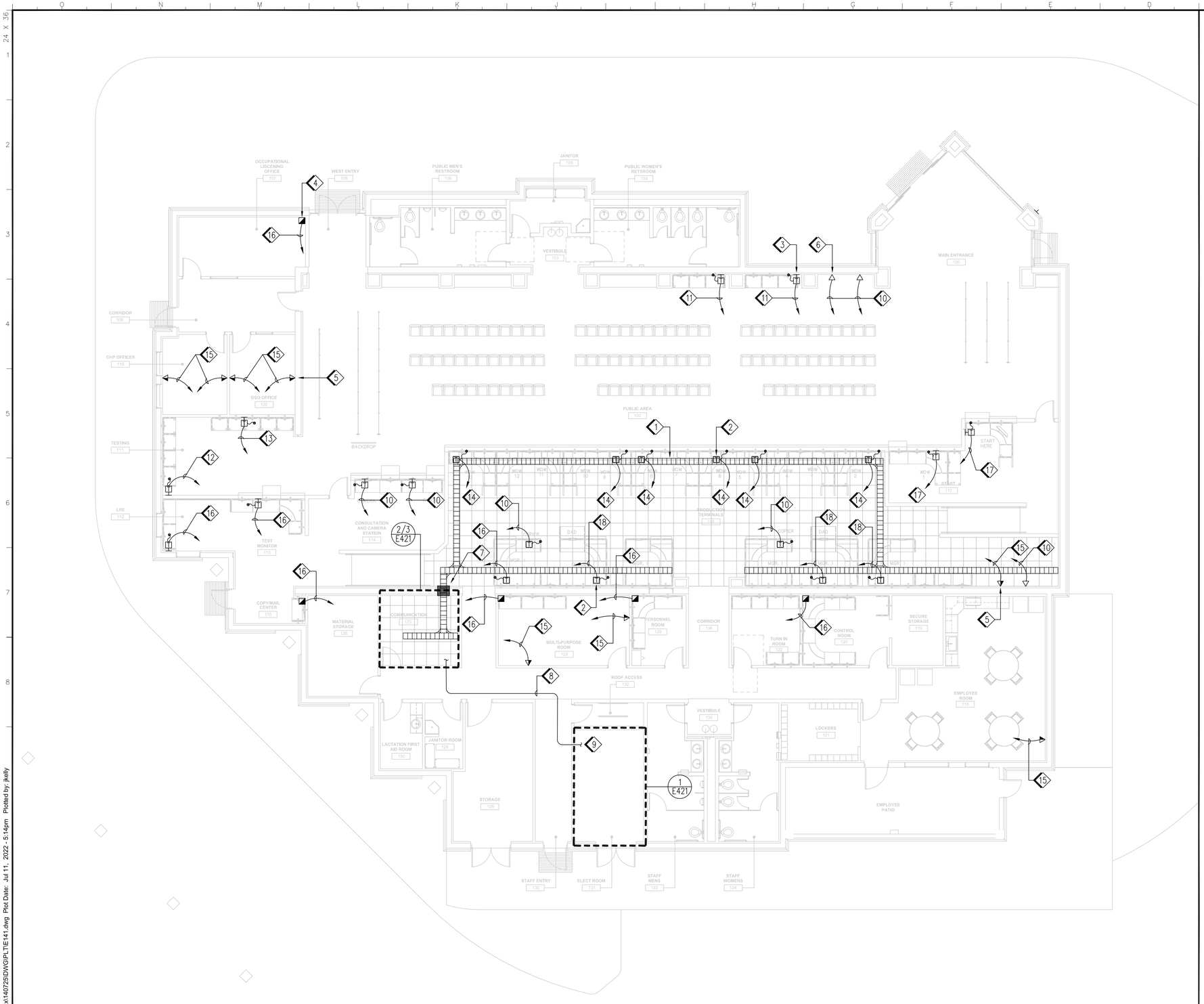

1. 4" x 12" WIRE CABLE TRAY LOCATED/MOUNTED BELOW RAISED, SEE 2/E542 FOR MOUNTING.
2. RAISED FLOOR MOUNTED MODULAR FURNITURE TELE/DATA SERVICE FEED WITH FLEX CONNECTION TO MODULAR FURNITURE. PROVIDE NEW CAT5e CABLING AS SHOWN, TYPICAL. SEE 1/E541.
3. WALL MOUNTED MODULAR FURNITURE SERVICE FEED WITH FLEX CONNECTION TO MODULAR FURNITURE. PROVIDE NEW CAT5e CABLING AS SHOWN, TYPICAL. SEE 3/E512.
4. DUAL CHANNEL POWER POLE. COORDINATE PURCHASE WITH MSF MANUFACTURER, TYPICAL.
5. WALL TELE/DATA OUTLET. PROVIDE NEW CAT5e CABLING AS SHOWN, TYPICAL. SEE 1/E541.
6. WALL MOUNTED DATA OUTLET. PROVIDE NEW CAT5e CABLING AS SHOWN, TYPICAL. SEE 1/E541.
7. CABLE TRAY THROUGH CONCRETE BLOCK WALL. COORDINATE EXACT OPENING WITH STRUCTURAL PLANS. SEE 2/E543 FOR RATED ASSEMBLY.
8. 1"C. ROUTED FROM COMMUNICATIONS ROOM 125 TO ELECTRICAL ROOM 131, WITH (5) CAT5e CABLES FROM MSB, LCC, RCR, TCP1 & 2 TO DATA PATCH PANEL, AND FACP CONNECTION TO TTB FOR DACT.
9. SEE 1/E421 FOR CONTINUATION.
10. (2) CAT5e CABLES (1 OUTLET TOTAL). (2) COMMUNICATIONS CAT5e COPPER CONNECTORS (RJ45) AT EACH OUTLET. PROVIDE AND INSTALL (2) CAT5e CABLES ROUTED FROM EACH OUTLET TO THE DATA PATCH PANEL LOCATED IN COMMUNICATIONS RM 125. PROVIDE TESTING PRIOR TO COMPLETION OF PROJECT. SEE 1/E541.
11. (3) CAT5e CABLES (3 OUTLETS TOTAL). (1) COMMUNICATIONS CAT5e COPPER CONNECTORS (RJ45) AT EACH OUTLET. PROVIDE AND INSTALL (1) CAT5e CABLES ROUTED FROM EACH OUTLET TO THE DATA PATCH PANEL LOCATED IN COMMUNICATIONS RM 125. PROVIDE TESTING PRIOR TO COMPLETION OF PROJECT. SEE 1/E541.
12. (4) CAT5e CABLES (4 OUTLETS TOTAL). (1) COMMUNICATIONS CAT5e COPPER CONNECTORS (RJ45) AT EACH OUTLET. PROVIDE AND INSTALL (1) CAT5e CABLES ROUTED FROM EACH OUTLET TO THE DATA PATCH PANEL LOCATED IN COMMUNICATIONS RM 125. PROVIDE TESTING PRIOR TO COMPLETION OF PROJECT. SEE 1/E541.
13. (5) CAT5e CABLES (5 OUTLETS TOTAL). (1) COMMUNICATIONS CAT5e COPPER CONNECTORS (RJ45) AT EACH OUTLET. PROVIDE AND INSTALL (1) CAT5e CABLES ROUTED FROM EACH OUTLET TO THE DATA PATCH PANEL LOCATED IN COMMUNICATIONS RM 125. PROVIDE TESTING PRIOR TO COMPLETION OF PROJECT. SEE 1/E541.
14. (10) CAT5e CABLES (2 OUTLETS TOTAL). (5) COMMUNICATIONS CAT5e COPPER CONNECTORS (RJ45) AT EACH OUTLET. PROVIDE AND INSTALL (5) CAT5e CABLES ROUTED FROM EACH OUTLET TO THE COMMUNICATIONS RM 125. (PROVIDE (4) DATA CABLES WITH CONNECTION TO THE DATA PATCH PANEL, AND (1) TELEPHONE CABLE WITH CONNECTION TO THE TELEPHONE PATCH PANEL). PROVIDE TESTING PRIOR TO COMPLETION OF PROJECT. SEE 1/E541.
15. (3) CAT5e CABLES (1 OUTLET TOTAL). (3) COMMUNICATIONS CAT5e COPPER CONNECTORS (RJ45) AT EACH OUTLET. PROVIDE AND INSTALL (3) CAT5e CABLES ROUTED FROM EACH OUTLET TO THE COMMUNICATIONS RM 125. (PROVIDE (2) DATA CABLES WITH CONNECTION TO THE DATA PATCH PANEL, AND (1) TELEPHONE CABLE WITH CONNECTION TO THE TELEPHONE PATCH PANEL). PROVIDE TESTING PRIOR TO COMPLETION OF PROJECT. SEE 1/E541.
16. (4) CAT5e CABLES (1 OUTLET TOTAL). (4) COMMUNICATIONS CAT5e COPPER CONNECTORS (RJ45) AT EACH OUTLET. PROVIDE AND INSTALL (4) CAT5e CABLES ROUTED FROM EACH OUTLET TO THE COMMUNICATIONS RM 125. (PROVIDE (3) DATA CABLES WITH CONNECTION TO THE DATA PATCH PANEL, AND (1) TELEPHONE CABLE WITH CONNECTION TO THE TELEPHONE PATCH PANEL). PROVIDE TESTING PRIOR TO COMPLETION OF PROJECT. SEE 1/E541.
17. (5) CAT5e CABLES (1 OUTLET TOTAL). (5) COMMUNICATIONS CAT5e COPPER CONNECTORS (RJ45) AT EACH OUTLET. PROVIDE AND INSTALL (5) CAT5e CABLES ROUTED FROM EACH OUTLET TO THE COMMUNICATIONS RM 125. (PROVIDE (4) DATA CABLES WITH CONNECTION TO THE DATA PATCH PANEL, AND (1) TELEPHONE CABLE WITH CONNECTION TO THE TELEPHONE PATCH PANEL). PROVIDE TESTING PRIOR TO COMPLETION OF PROJECT. SEE 1/E541.
18. (8) CAT5e CABLES (2 OUTLETS TOTAL). (4) COMMUNICATIONS CAT5e COPPER CONNECTORS (RJ45) AT EACH OUTLET. PROVIDE AND INSTALL (5) CAT5e CABLES ROUTED FROM EACH OUTLET TO THE COMMUNICATIONS RM 125. (PROVIDE (3) DATA CABLES WITH CONNECTION TO THE DATA PATCH PANEL, AND (1) TELEPHONE CABLE WITH CONNECTION TO THE TELEPHONE PATCH PANEL). PROVIDE TESTING PRIOR TO COMPLETION OF PROJECT. SEE 1/E541.

1 TELECOMMUNICATIONS PLAN — 1/8"=1'-0"

2 KEYED NOTES — NO SCALE

IDENTIFICATION STAMP
DIV. OF THE STATE ARCHITECT
APP: 03-121324 INC:
REVIEWED FOR
SS ☐ FLS ☐ ACS ☑
DATE: 09/14/2022

OFFICE OF THE STATE FIRE MARSHAL
APPROVED FIRE AND PANIC ONLY
09/07/22
21-0233
Approval of this plan does not authorize or approve any omission or deviation from applicable regulations. Final approval is subject to field inspection. One set of approved plans shall be available on the project site at all times.

DGS GENERAL SERVICES
Department of General Services
Architecture & Engineering Sections
State of California
Real Estate Services Division
Project Management & Development Branch
707 Third Street, Suite 4-105
West Sacramento, California 95605

REGISTERED PROFESSIONAL ENGINEER
JOSEPH N ABDELSAYD
No. E-18915
ELECTRICAL
STATE OF CALIFORNIA

DMV
State of California
Department of Motor Vehicles

Issue

No.	Date	Description
1	9/2/22	

Project
SANTA MARIA FIELD OFFICE REPLACEMENT
2770 SANTA MARIA WAY
SANTA MARIA, CA 93455
SANTA BARBARA COUNTY

DEPT OF MOTOR VEHICLES

Supervisor	Designed	Drawn
J.ABDELSAYD	M. PRINCE	M. PRINCE

DSA App No.	SFM Permit No.
03-121324	21-S-0233-CP-ER

Sheet Title
TELECOMM PLAN

Project Number
DGS000000140725

Reference North | Sheet Scale 1/8" = 1'-0" | Sheet Number E141

Copyright © 2022, California Department of General Services - Real Estate Services Division

CAD File: X:\Projects\14xxxx\140725\DWG\PLT\E141.dwg Plot Date: Jul 11, 2022 - 5:14pm Plotted by: jkelly

RELATIVE BORDER SCALE IN INCHES 0 1 2 3

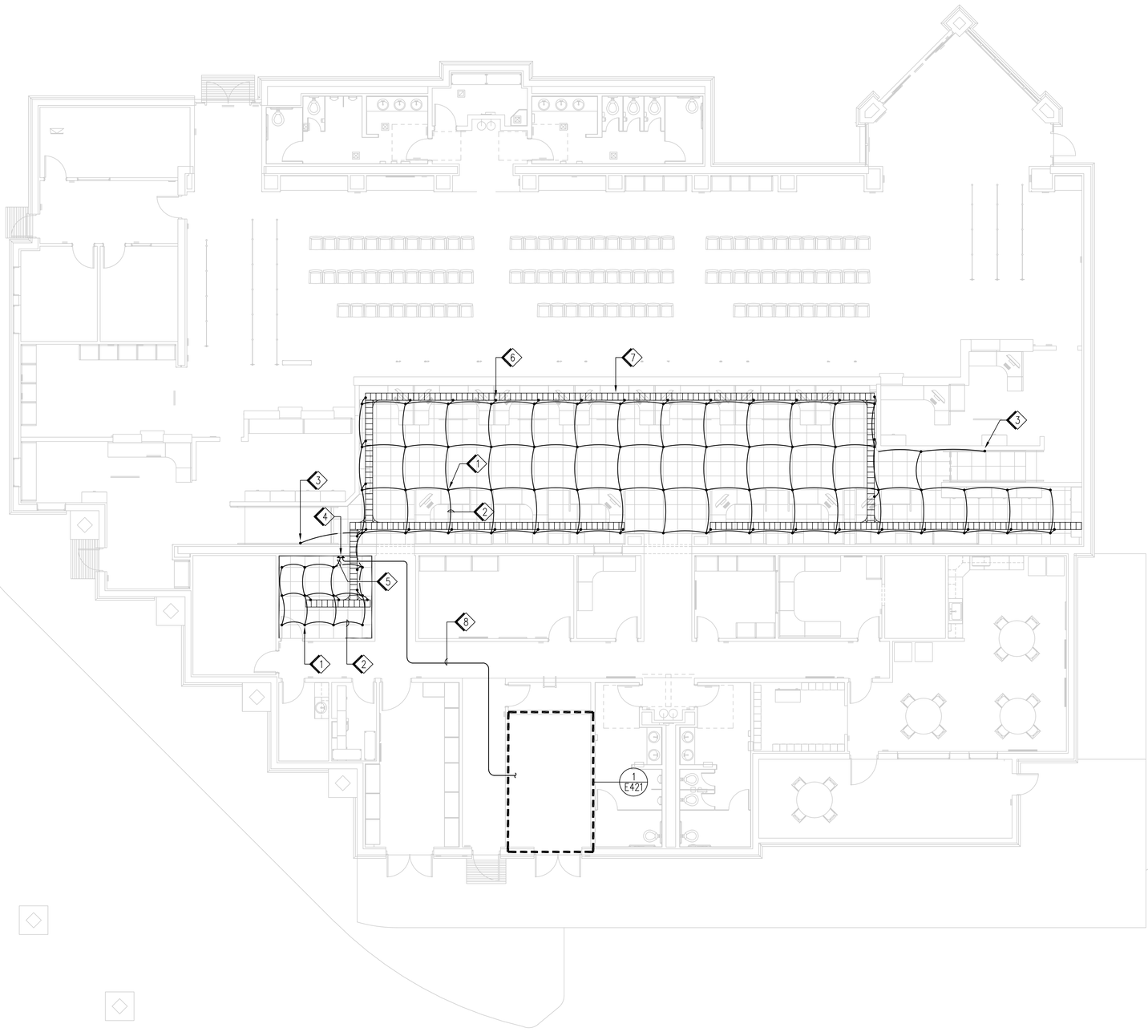

1 TELECOMMUNICATIONS GROUNDING PLAN — 1/8"=1'-0"

1. RAISED FLOOR PEDESTAL GROUND CONNECTOR. SEE 5/E542, TYPICAL.
2. #6 AWG EQUIPMENT GROUNDING CONDUCTOR, TYPICAL.
3. #6 AWG EQUIPMENT GROUND CONDUCTOR WITH CONNECTION TO RAISED FLOOR RAMP.
4. TELECOMMUNICATIONS MAIN GROUNDING BUS BAR (TMGB), SEE 6/E542.
5. #6 AWG GROUNDING CONDUCTOR ROUTED ABOVE RAISED FLOOR TO 'TMGB', SEE 4/E421.
6. WIRE CABLE TRAY GROUNDING LUG. SEE 5/E542, TYPICAL.
7. WIRE CABLE TRAY BELOW RAISED FLOOR. SEE 2/E542,
8. 3/4"C. WITH (1) #2 EQUIPMENT GROUND CONDUCTOR WITH CONNECTION TO 'MSB' LOCATED IN ELECTRICAL RM.

2 KEYED NOTES — NO SCALE

IDENTIFICATION STAMP
DIV. OF THE STATE ARCHITECT
APP: 03-121324 INC:
REVIEWED FOR
SS ☐ FLS ☐ ACS ☑
DATE: 09/14/2022

OFFICE OF THE STATE FIRE MARSHAL
APPROVED FIRE AND PANIC ONLY
09/07/22
21-0233
Approval of this plan does not authorize or approve any omission or deviation from applicable regulations. Final approval is subject to field inspection. One set of approved plans shall be available on the project site at all times.

DGS GENERAL SERVICES
Department of General Services
Architecture & Engineering Sections
State of California
Real Estate Services Division
Project Management & Development Branch
707 Third Street, Suite 4-105
West Sacramento, California 95605

REGISTERED PROFESSIONAL ENGINEER
JOSEPH H ABDELSAYED
No. E-18915
ELECTRICAL
STATE OF CALIFORNIA

DMV
State of California
Department of Motor Vehicles

Issue		
No.	Date	Description
1	9/2/22	

Project
SANTA MARIA FIELD OFFICE REPLACEMENT

2770 SANTA MARIA WAY
SANTA MARIA, CA 93455
SANTA BARBARA COUNTY

DEPT OF MOTOR VEHICLES

Supervisor	Designed	Drawn
J.ABDELSAYD	M. PRINCE	M. PRINCE

DSA App No.	SFM Permit No.
03-121324	21-S-0233-CP-ER

Sheet Title
TELECOMM GROUNDING PLAN

Project Number
DGS000000140725

Reference North

Sheet Scale
1/8" = 1'-0"

Sheet Number
E142

Copyright © 2022, California Department of General Services - Real Estate Services Division

CAD File: X:\Projects\114xxxx\140725\DWG\PLTIE142.dwg Plot Date: Jul 11, 2022 - 5:14pm Plotted by: jkelly

RELATIVE BORDER SCALE IN INCHES 0 1 2 3

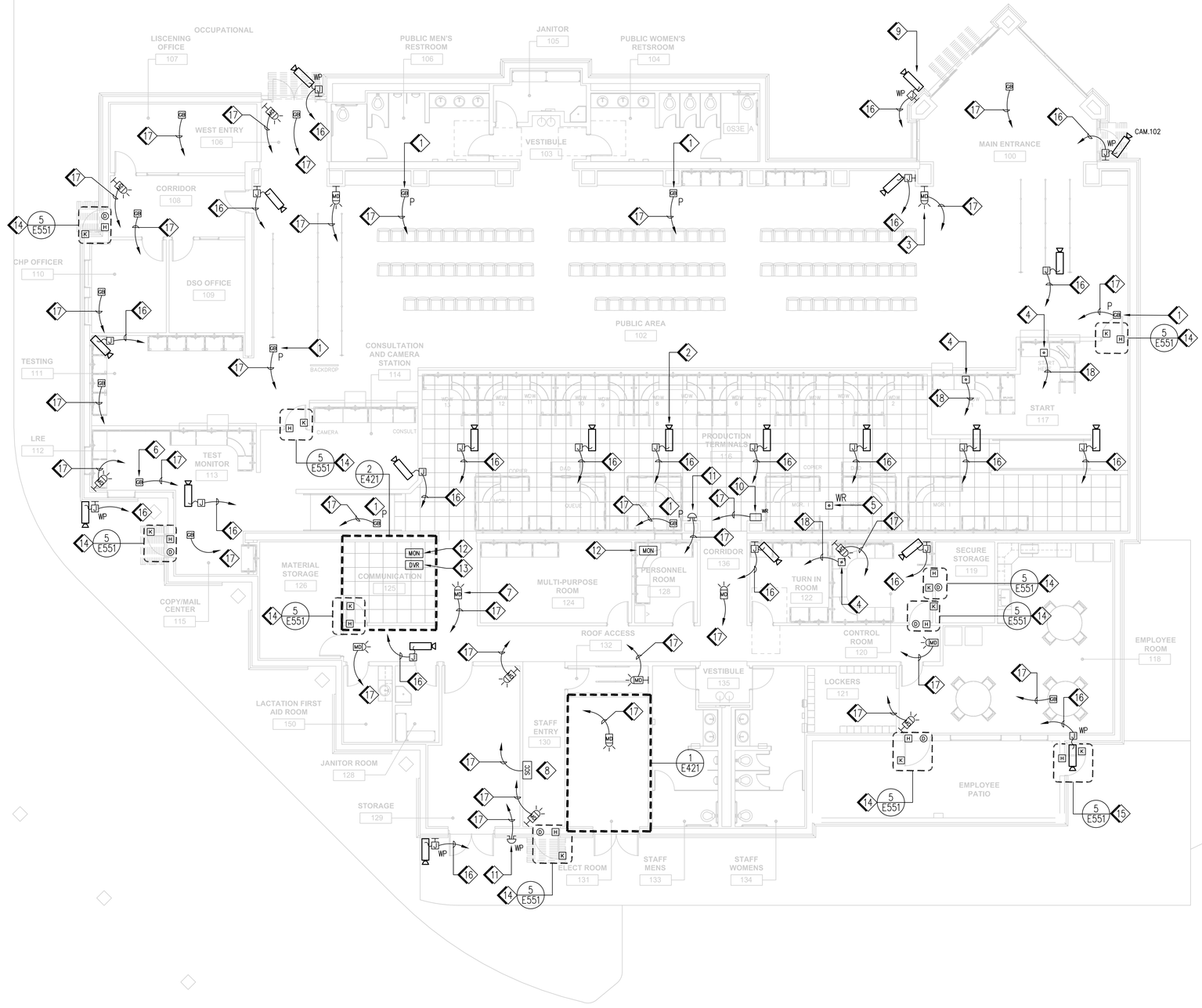

1 SECURITY PLAN

1/8"=1'-0"

2 KEYED NOTES

NO SCALE

1. ALL SECURITY CABLING SHALL BE RAN IN MINIMUM 1/2" CONDUIT, AND DEVICES MOUNTED TO J-BOXES.
2. EXPOSED CONDUIT LOCATIONS SHALL BE MINIMIZED, AND EVERY EFFORT TO CONCEAL CONDUIT SHALL BE TAKEN.
3. ALL EXPOSED CONDUIT SHALL BE PAINTED TO MATCH SURFACE IT IS BEING ATTACHED TO. COORDINATE COLORS WITH ARCHITECTURAL PLANS.

3 GENERAL NOTES

NO SCALE

1. GLASS BREAK DETECTOR LOCATED IN PUBLIC AREA CEILING SPACE TO MONITOR UPPER WINDOWS,
2. INTERIOR SURFACE MOUNT CCTV CAMERA LOCATION. CAMERA PROVIDED AND INSTALLED BY OTHERS.
3. WALL MOUNTED MOTION SENSOR, TYPICAL.
4. UNDER COUNTER HOLD-UP DURESS BUTTON HARD WIRED BACK TO SECURITY PANEL, LOCATED IN THE COMMUNICATIONS RM 125.
5. HAND HELD WIRELESS HOLD-UP DURESS BUTTON.
6. GLASS BREAK DETECTOR LOCATED INTERIOR OF THE BUILDING TO MONITOR WINDOWS (COORDINATE LOCATION WITH SENSOR SENSITIVITY), TYPICAL.
7. CEILING MOUNTED MOTION SENSOR, TYPICAL.
8. WALL MOUNTED SECURITY CONTROL CONSOLE, AT +48" TO TOP OF DEVICE.
9. EXTERIOR SURFACE MOUNT CCTV CAMERA. COORDINATE J-BOX TYPE WITH CCTV CAMERA MANUFACTURER MOUNTING REQUIREMENTS.
10. WALL MOUNTED SECURITY WIRELESS RECEIVER FOR WIRELESS DURESS BUTTON.
11. INTERIOR AND EXTERIOR SECURITY BELL WITH CONNECTION TO SECURITY CONTROL PANEL LOCATED IN COMMUNICATIONS RM 125. CABLING PER MANUFACTURER REQUIREMENTS.
12. CCTV MONITOR LOCATION. COORDINATE CABLIING REQUIREMENTS WITH CCTV MANUFACTURER PRIOR TO ROUGH-IN. EQUIPMENT PROVIDED AND INSTALLED BY OTHERS.
13. CCTV RACK MOUNTED DVD SYSTEM LOCATION. EQUIPMENT PROVIDED AND INSTALLED BY OTHERS.
14. ACCESS CONTROL HARDWARE. COORDINATE WITH ARCHITECTURAL DOOR HARDWARE REQUIREMENTS.
15. EXTERIOR GATE ACCESS CONTROL HARDWARE. COORDINATE WITH ARCHITECTURAL DOOR HARDWARE REQUIREMENTS.
16. 3/4"C. WITH (1) #18 (2-CONDUCTOR CABLE), AND (1) RG6 COAX CABLE. ROUTE BETWEEN CCTV CAMERA LOCATION AND DVR/POWER SUPPLY LOCATED IN THE COMMUNICATIONS RM 125. LEAVE 10' OF SLACK AT BOTH ENDS FOR INSTALLATION. CCTV CAMERAS AND HARDWARE PROVIDED AND INSTALLED BY OTHERS.
17. 1/2"C. WITH CONNECTION TO SECURITY CONTROL PANEL LOCATED IN COMMUNICATION RM 125. CABLING PER MANUFACTURER REQUIREMENTS.
18. 1/2"C. WITH CONNECTION TO SECURITY CONTROL PANEL LOCATED IN COMMUNICATION RM 125. ROUTE FLEX CONDUIT MOUNTED TO UNDERSIDE OF DESK TOP FROM MSF TO PANIC BUTTON. CABLING PER MANUFACTURER REQUIREMENTS.

IDENTIFICATION STAMP
DIV. OF THE STATE ARCHITECT
APP: 03-121324 INC:
REVIEWED FOR
SS ☐ FLS ☐ ACS ☑
DATE: 09/14/2022

OFFICE OF THE STATE FIRE MARSHAL
APPROVED FIRE AND PANIC ONLY
09/07/22
21-0233
Approval of this plan does not authorize or approve any omission or deviation from applicable regulations. Final approval is subject to field inspection. One set of approved plans shall be available on the project site at all times.

DGS GENERAL SERVICES
Department of General Services
Architecture & Engineering Sections
State of California
Real Estate Services Division
Project Management & Development Branch
707 Third Street, Suite 4-105
West Sacramento, California 95605

REGISTERED PROFESSIONAL ENGINEER
JOSEPH H ABDELSAYED
No. E-18915
ELECTRICAL
STATE OF CALIFORNIA

DMV
State of California
Department of Motor Vehicles

Issue

No.	Date	Description
1	9/2/22	

Project
SANTA MARIA FIELD OFFICE REPLACEMENT
2770 SANTA MARIA WAY
SANTA MARIA, CA 93455
SANTA BARBARA COUNTY

DEPT OF MOTOR VEHICLES

Supervisor	Designed	Drawn
J.ABDELSAYD	M. PRINCE	M. PRINCE

DSA App No. 03-121324
SFM Permit No. 21-S-0233-CP-ER

Sheet Title
SECURITY PLAN

Project Number
DGS000000140725

Reference North
Sheet Scale 1/8" = 1'-0"
Sheet Number E151

Copyright © 2022, California Department of General Services - Real Estate Services Division

CAD File: X:\Projects\114xxxx\140725\DWG\PLTE151.dwg Plot Date: Jul 11, 2022 - 5:14pm Plotted by: jkelly

RELATIVE BORDER SCALE IN INCHES 0 1 2 3

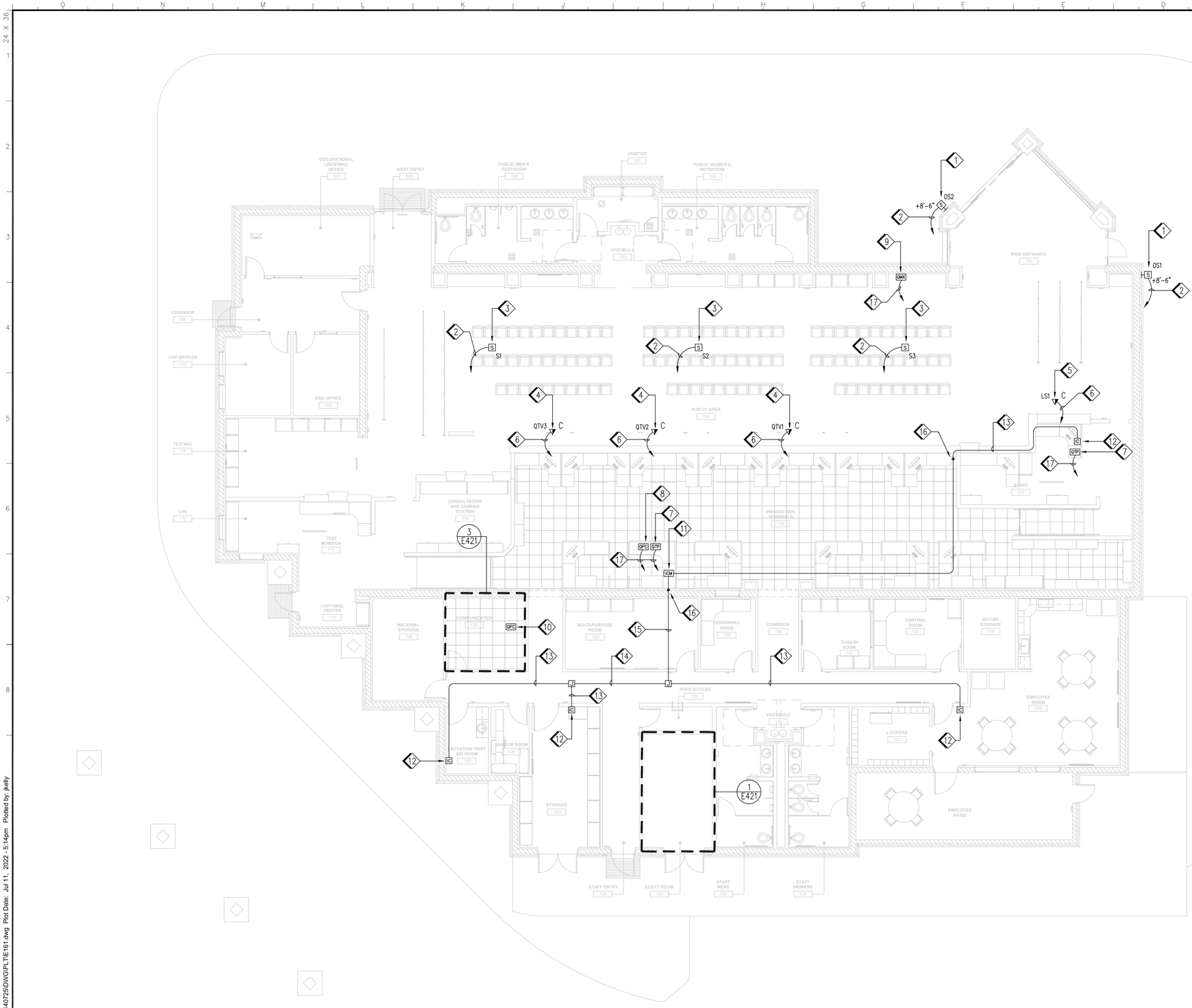

1 AUDIO/VISAL PLAN 1/8"=1'-0"

1. EXTERIOR WEATHER-PROOF WALL MOUNTED SPEAKER FOR QUE SYSTEM, AGENCY PROVIDED AND CONTRACTOR INSTALLED. MOUNT +8'-6" TO CENTER OF SPEAKER A.F.F.
2. 1/2"C. WITH (1)#16 SPEAKER WIRE TO Q-AMPLIFIER ON THE DATA RACK LOCATED IN COMMUNICATIONS ROOM 125, LEAVING 10' OF SLACK AT BOTH ENDS.
3. CEILING MOUNTED SPEAKER FOR QUE SYSTEM, AGENCY PROVIDED AND CONTRACTOR INSTALLED.
4. SOFFIT MOUNTED OUTLET FOR QTV MONITOR. (1) CAT5e CABLE FROM VGA EXTENDER LOCATED ON MONITOR, TO Q-HOME MOUNTED IN DATA RACK LOCATED IN COMMUNICATIONS ROOM 125.
5. SOFFIT MOUNTED OUTLET FOR QTV LED SIGN. (1) CAT5e CABLE FROM VGA EXTENDER LOCATED ON SIGN, TO Q-HOME MOUNTED IN DATA RACK LOCATED IN COMMUNICATIONS ROOM 125.
6. 1/2"C. WITH (1) CAT5e CABLE FROM Q-HOME TO EACH QTV MONITOR. LEAVE 10' OF SLACK AT BOTH ENDS, AND PROVIDE TERMINATION AT EACH END. EACH END OF CABLE SHALL HAVE A VGA EXTENDER, SENDING HALF AT THE Q-HOME AND RECEIVING END AT THE QTV MONITOR.
7. QUEUE TICKET PRINTER LOCATION SHOWN FOR CLARITY. (1) CAT5e CABLE ROUTED VIA MSF, TO Q-HOME MOUNTED IN DATA RACK LOCATED IN COMMUNICATIONS ROOM 125.
8. QUEUE PC LOCATION SHOWN FOR CLARITY. (1) CAT5e CABLE ROUTED VIA MSF, TO DATA PATCH PANEL MOUNTED IN DATA RACK LOCATED IN COMMUNICATIONS ROOM 125.
9. QUEUE KIOSK LOCATION SHOWN FOR CLARITY. (2) CAT5e CABLE ROUTED TO Q-HOME MOUNTED IN DATA RACK LOCATED IN COMMUNICATIONS ROOM 125.
10. Q-HOME EQUIPMENT MOUNTED IN DATA RACK.
11. INTERCOM SYSTEM MASTER STATION (HANDSET TYPE) WITH 120VAC POWER SUPPLY.
12. INTERCOM SYSTEM SUB-STATION (HANDSET TYPE) WITH LOW VOLTAGE POWER SUPPLIED VIA MASTER STATION.
13. 1/2"C. (1) GENERAL PURPOSE #20 AWG, 2-CONDUCTOR PLENUM RATED, SHIELDED CABLE.
14. 1/2"C. (2) GENERAL PURPOSE #20 AWG, 2-CONDUCTOR PLENUM RATED, SHIELDED CABLE.
15. 1/2"C. (3) GENERAL PURPOSE #20 AWG, 2-CONDUCTOR PLENUM RATED, SHIELDED CABLE.
16. TRANSITION FROM CONDUIT TO FREE AIR PLENUM RATED CABLING ROUTED IN WIRE CABLE TRAY. ROUTE WITHIN MSF TO INTERCOM MASTER STATION.
17. LOW VOLTAGE CABLES TO DATA RACKS IN COMMUNICATIONS RM 125. SEE 1/E141.

2 KEYED NOTED NO SCALE

IDENTIFICATION STAMP
DIV. OF THE STATE ARCHITECT
APP: 03-121324 INC:
REVIEWED FOR
SS ☐ FLS ☐ ACS ☑
DATE: 09/14/2022

OFFICE OF THE STATE FIRE MARSHAL
APPROVED FIRE AND PANIC ONLY
09/07/22
21-0233
Approval of this plan does not authorize or approve any omission or deviation from applicable regulations. Final approval is subject to field inspection. One set of approved plans shall be available on the project site at all times.

DGS GENERAL SERVICES
Department of General Services
Architecture & Engineering Sections
State of California
Real Estate Services Division
Project Management & Development Branch
707 Third Street, Suite 4-105
West Sacramento, California 95605

REGISTERED PROFESSIONAL ENGINEER
JOSEPH H ABDELSAYED
No. E-18915
ELECTRICAL
STATE OF CALIFORNIA

State of California
Department of Motor Vehicles

Issue		
No.	Date	Description
1	9/2/22	

Project
SANTA MARIA FIELD OFFICE REPLACEMENT

2770 SANTA MARIA WAY
SANTA MARIA, CA 93455
SANTA BARBARA COUNTY

DEPT OF MOTOR VEHICLES

Supervisor	Designed	Drawn
J.ABDELSAYD	M.PRINCE	M.PRINCE

DSA App No.	SFM Permit No.
03-121324	21-S-0233-CP-ER

Sheet Title
AUDIO/VISAL PLAN

Project Number
DGS000000140725

Reference North | Sheet Scale: AS NOTED | Sheet Number: E161

Copyright © 2022, California Department of General Services - Real Estate Services Division

RELATIVE BORDER SCALE IN INCHES 0 1 2 3

CAD File: X:\Projects\14xxxx\140725\DWG\PLTIE161.dwg Plot Date: Jul 11, 2022 - 5:14pm Plotted by: jkelly

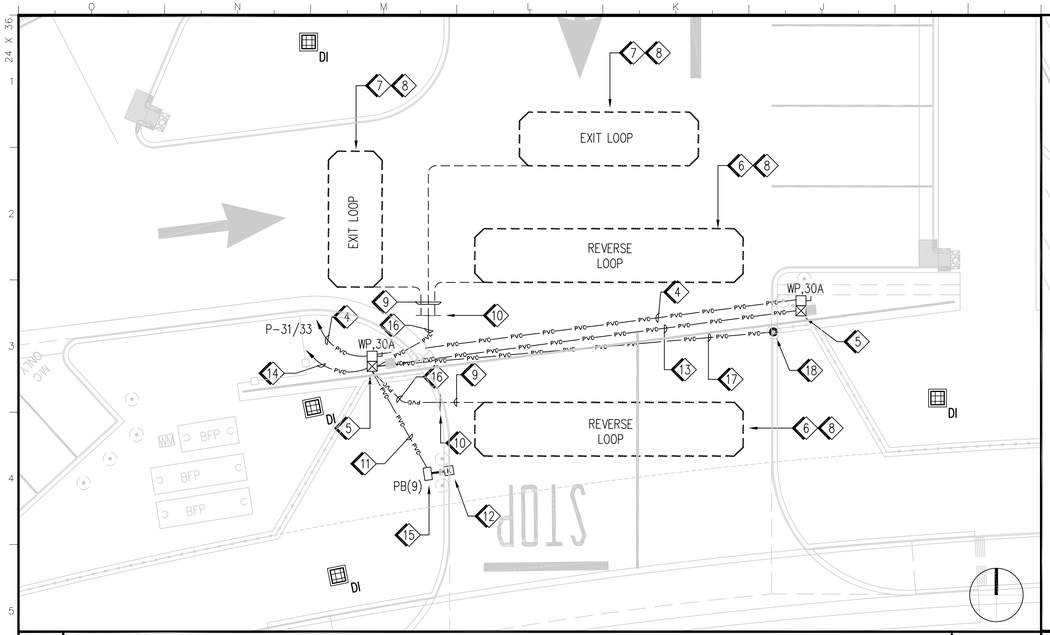

1 SOUTH GATE ENLARGED PLAN — 1/8" = 1'-0"

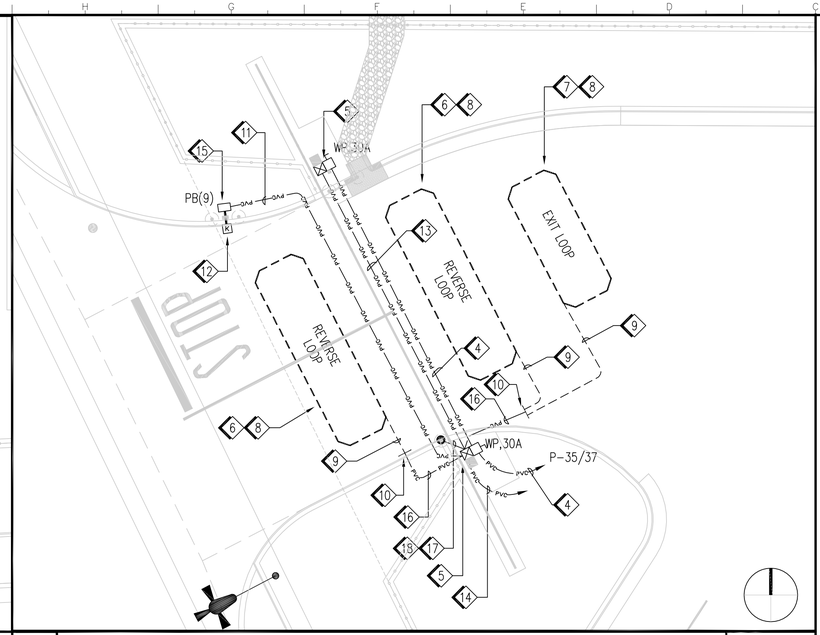

2 NORTH GATE ENLARGED PLAN — 1/8" = 1'-0"

1. NOT USED
2. NOT USED
3. NOT USED
4. 1"C, (2)#3 & (1)#3 GND.
5. GATE OPERATOR, SEE CIVIL DRAWINGS. 208V, 2.8A. CONDUIT STUB-UPS SHALL BE PER THE GATE OPERATOR MANUFACTURER RECOMMENDATIONS.
6. GATE REVERSE LOOP DETECTOR, SEE 4/E501.
7. GATE AUTOMATIC EXIT LOOP DETECTOR, SEE 4/E501.
8. LOOP DETECTORS TO BE INCLUDED AS PART OF THE GATE OPERATOR SYSTEM. INSTALLATION SHALL BE PER THE GATE MANUFACTURER'S RECOMMENDATIONS.
9. TYPICAL – GATE LOOP DETECTOR LEAD-IN CABLE.
10. TRANSITION LOOP DETECTOR LEAD-IN CABLES TO CONDUIT. PLUG CONDUIT OPENING WITH DUCT SEAL.
11. 1" C. WITH CONDUCTORS REQUIRED FOR KEYPAD PER MANUFACTURER'S RECOMMENDATIONS.
12. GATE OPERATOR KEY PAD WITH INTERCOM AND KNOX BOX, SEE 3/E501.
13. 1" C. WITH GATE CONTROLLER INTER-TIE CABLES PER MANUFACTURER'S RECOMMENDATIONS
14. 1"C, WITH (1) CAT 6 TELECOMMUNICATIONS CABLE WITH CONNECTION TO 'TTB'.
15. PULL BOX, SEE 1/E622.
16. 1" C. WITH GATE LOOP DETECTOR CABLES PER MANUFACTURER REQUIREMENTS.
17. 1" C. WITH CONDUCTORS REQUIRED FOR EMERGENCY VEHICLE STROBE LIGHT SENSOR PER MANUFACTURER'S RECOMMENDATIONS, TYPICAL OF 2 GATES.
18. GATE OPERATOR EMERGENCY VEHICLE STROBE LIGHT SENSOR, TYPICAL OF 2 GATES. COORDINATE EXACT LOCATION WITH CIVIL PLANS 1/C101.

3 KEYED NOTES

IDENTIFICATION STAMP
DIV. OF THE STATE ARCHITECT
APP: 03-121324 INC:
REVIEWED FOR
SS ☐ FLS ☐ ACS ☑
DATE: 09/14/2022

OFFICE OF THE STATE FIRE MARSHAL
APPROVED FIRE AND PANIC ONLY
09/07/22
21-0233
Approval of this plan does not authorize or approve any omission or deviation from applicable regulations. Final approval is subject to field inspection. One set of approved plans shall be available on the project site at all times.

DGS GENERAL SERVICES

Department of General Services
Architecture & Engineering Sections
State of California
Real Estate Services Division
Project Management & Development Branch
707 Third Street, Suite 4-105
West Sacramento, California 95605

REGISTERED PROFESSIONAL ENGINEER
JOSEPH H ABDELSAYD
No. E-18915
ELECTRICAL
STATE OF CALIFORNIA

DMV
State of California
Department of Motor Vehicles

Issue

No.	Date	Description
1	9/2/22	

Project
SANTA MARIA FIELD OFFICE REPLACEMENT

2770 SANTA MARIA WAY
SANTA MARIA, CA 93455
SANTA BARBARA COUNTY

DEPT OF MOTOR VEHICLES

Supervisor	Designed	Drawn
J.ABDELSAYD	M.PRINCE	M.PRINCE

DSA App No.	SFM Permit No.
03-121324	21-S-0233-CP-ER

Sheet Title
ELECTRICAL SITE LARGE SCALE VIEWS

Project Number
DGS000000140725

Reference North	Sheet Scale	Sheet Number
	AS NOTED	E401

Copyright © 2022, California Department of General Services - Real Estate Services Division

CAD File: X:\Projects\144xxxx\140725\DWG\PLTE401.dwg Plot Date: Jul 11, 2022 - 5:15pm Plotted by: jkelly

RELATIVE BORDER SCALE IN INCHES

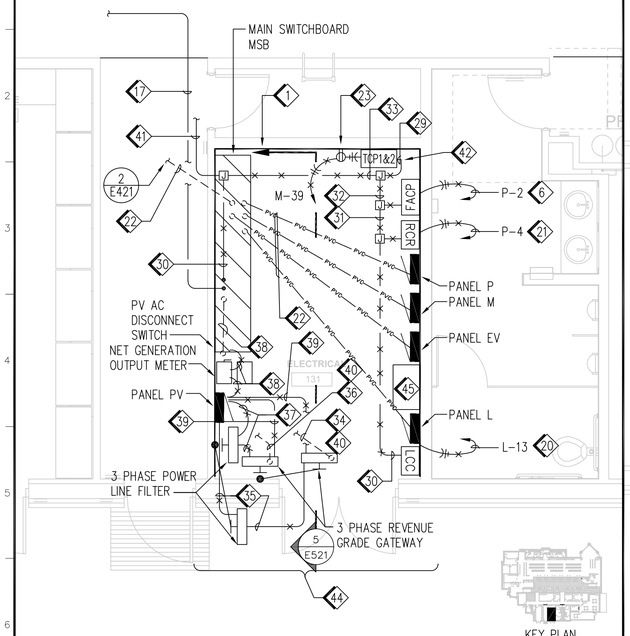

KEY PLAN

1 ELECTRICAL ROOM 1/4"=1'-0"

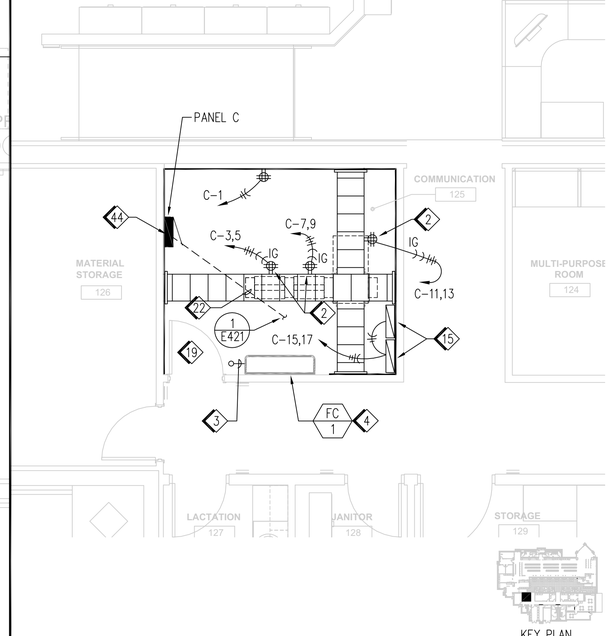

KEY PLAN

2 COMMUNICATION RM - POWER 1/4"=1'-0"

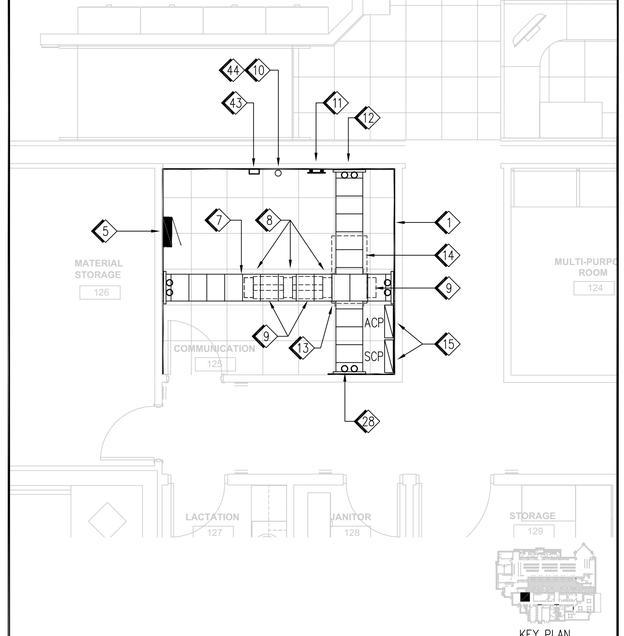

KEY PLAN

3 COMMUNICATION RM - EQUIPMENT 1/4"=1'-0"

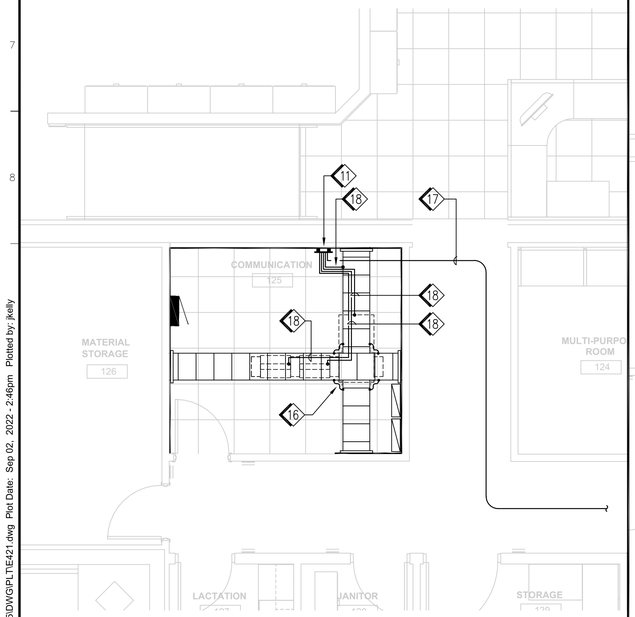

KEY PLAN

4 COMMUNICATION RM - GROUNDING 1/4"=1'-0"

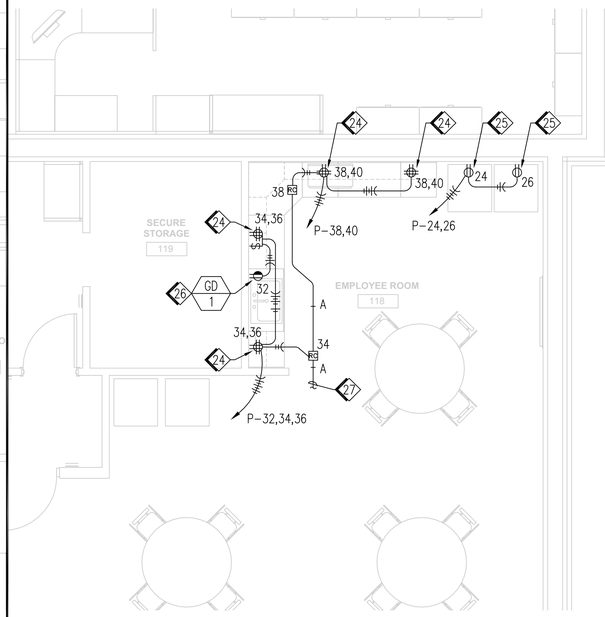

KEY PLAN

5 EMPLOYEE ROOM COUNTER POWER 1/4"=1'-0"

34 4"C, PVC, 4#3/0, 1#6 GND

35 4"C, EMT, 4#3/0, 1#6 GND

36 4"C, PVC, 4#400KCMIL, 1#6 GND

37 4"C, EMT, 4#400KCMIL, 1#6 GND

38 4"C, EMT, 4#600 KCMIL, 1#3 GND

39 3/4"C, EMT, 3#10

40 FOR CONTINUATION SEE SHEET 4/E107.

41 1"C. WITH (5) CAT5e CABLE TO PATCH PANEL, AND (1) CAT5e TO TTB (FOR FIRE ALARM CONTROL PANEL DACT CONNECTION) LOCATED IN COMMUNICATIONS RM 125. SEE 1/E141 FOR CONTINUATION.

42 COORDINATE TCP POWER CONNECTION TYPE ON SITE.

43 GATE CONTROLLER TELEPHONE BYPASS SWITCH.

44 INSTALL CONDUIT SEALS PER F/C708 ON ALL CONDUITS EXITING PANELS, ETC. AND ROUTING UNDERGROUND.

45 EXTERIOR EGRESS LIGHTING EMERGENCY POWER SYSTEM: 2.7 KVA, 208V 1PH., 90 MINUTE MAINTENANCE FREE EXTENDED LIFE BATTERY, DUAL-LITE #D-208-27-G-208-D-20-01-FSL OR EQUAL.

6 KEYED NOTES (CONT)

1 3/4" x 4' x 8' FIRE RETARDANT PLYWOOD BACKBOARD.

2 ISOLATED GROUND FOURPLEX (DOUBLE DUPLEX) RECEPTACLE MOUNTED ON SIDE OF CABLE TRAY ABOVE CENTER OF RACK, WITH EACH DUPLEX ON SEPARATE CIRCUIT.

3 UP TO CU-1, SEE 1/E122.

4 UNIT FED FROM CU-1 VIA INTERCONNECT WIRING.

5 SURFACE MOUNTED PANELBOARD 'C'.

6 FIRE ALARM CONTROL PANEL 'FACP'.

7 18" CABLE TRAY WITH 12" SPACED RUNGS, SEE 7/E541.

8 VERTICAL CABLE MANGERS, SEE 2 & 7/E541.

9 2-POST TELE/DATA RACK WITH RAISED FLOOR SUPPORT, SEE 7/E541.

10 4"C. WITH 3/8" PULL ROPE, ROUTED FROM EXTERIOR UTILITY MANHOLE UP INTO COMMUNICATIONS ROOM FOR SERVICE PROVIDER USAGE. SEE 1/E101 FOR CONTINUATION.

11 TELECOMMUNICATIONS MAIN GROUND BUSBAR, SEE 6/E542.

12 CABLE TRAY WALL ANGLE SUPPORT KIT, SEE 5/E541.

13 CABLE TRAY HEAVY-DUTY JUNCTION SPLICE KIT, SEE 4/E541.

14 SERVER CABINET WITH RAISED FLOOR SUPPORT, SEE 7/E541.

15 ACCESS CONTROL PANEL 'ACP', AND SECURITY CONTROL PANEL 'SCP'.

16 #6 CONDUCTOR CABLE TRAY BONDING JUMPER.

17 3/4"C. WITH (1) #2 EQUIPMENT GROUNDING CONDUCTOR WITH CONNECTION TO 'MSB' LOCATED IN ELECTRICAL RM.

18 #6 EQUIPMENT GROUNDING CONDUCTOR FOR CONNECTION TO TELECOM RACKS AND CABLE TRAY.

19 ROUTE ABOVEGROUND CONDUITS EXPOSED WITHIN THIS ROOM.

20 LIGHTING CONTROL SYSTEM "ECYLPSE" CONTROL UNIT.

21 LIGHTING CONROL SYSTEM RECEPTACLE CONTROL RELAY PANEL.

22 FEEDER(S), SEE 1/E601 & 1/E602.

23 +36" FOR TEMPERATURE CONTROL SYSTEM COMPUTER STATION, LABEL "TEMP. CONTROL EQUIP. ONLY".

24 FOURPLEX RECEPTACLE WITH (1) CONTROLLED & (1) UNCONTROLLED DUPLEX, BOTH GFCI PROTECTED, MOUNTED ABOVE COUNTER, SEE 1/E521.

25 +60" FOR REFRIGERATOR.

26 SPLIT-FIN DUPLEX RECEPTACLE WITH 1/2 SWITCH CONTROLLED FOR GD-1, LABEL THAT HALF "DISPOSAL".

27 CONNECT TO LIGHTING CONTROLS FOR THIS ROOM.

28 4" SLEEVE THRU FIRE RATED CEILING, TYPICAL OF 8. SEE 5/E541 & 1/E543.

29 3/4"C. WITH (2) CAT5e CABLE FOR TCP1 & 2 TO PATCH PANEL LOCATED IN COMMUNICATIONS RM 125.

30 3/4"C. WITH (1) CAT5e CABLE TO PATCH PANEL LOCATED IN COMMUNICATIONS RM 125, (TYP FOR MSB, RCR & FACP).

31 3/4"C. WITH (2) CAT5e CABLE TO PATCH PANEL LOCATED IN COMMUNICATIONS RM 125.

32 3/4"C. WITH (2) CAT5e CABLE TO PATCH PANEL, AND (1) CAT5e TO TTB (FOR FIRE ALARM CONTROL PANEL DACT CONNECTION) LOCATED IN COMMUNICATIONS RM 125.

33 1"C. WITH (4) CAT5e CABLE TO PATCH PANEL, AND (1) CAT5e TO TTB (FOR FIRE ALARM CONTROL PANEL DACT CONNECTION) LOCATED IN COMMUNICATIONS RM 125. SEE 1/E141 FOR CONTINUATION.

6 KEYED NOTES

IDENTIFICATION STAMP
DIV. OF THE STATE ARCHITECT
APP: 03-121324 INC:
REVIEWED FOR
SS ☐ FLS ☐ ACS ☑
DATE: 09/14/2022

OFFICE OF THE STATE FIRE MARSHAL
APPROVED FIRE AND PANIC ONLY
09/07/22
21-0233
Approval of this plan does not authorize or approve any omission or deviation from applicable regulations. Final approval is subject to field inspection. One set of approved plans shall be available on the project site at all times.

DGS GENERAL SERVICES
Department of General Services
Architecture & Engineering Sections
State of California
Real Estate Services Division
Project Management & Development Branch
707 Third Street, Suite 4-105
West Sacramento, California 95605

REGISTERED PROFESSIONAL ENGINEER
JOSEPH H ABDELSAYD
No. E-18915
ELECTRICAL
STATE OF CALIFORNIA

DMV
State of California
Department of Motor Vehicles

Issue		
No.	Date	Description
1	9/2/22	

Project
SANTA MARIA FIELD OFFICE REPLACEMENT
2770 SANTA MARIA WAY
SANTA MARIA, CA 93455
SANTA BARBARA COUNTY
DEPT OF MOTOR VEHICLES

Supervisor	Designed	Drawn
J.ABDELSAYD	EEU	EEU

DSA App No. 03-121324
SFM Permit No. 21-S-0233-CP-ER

Sheet Title
ENLARGED PLANS

Project Number
DGS000000140725

Reference North
Sheet Scale AS NOTED
Sheet Number E421

Copyright © 2022, California Department of General Services - Real Estate Services Division

CAD File: X:\Projects\114xxxx\140725\DWG\PLTE421.dwg Plot Date: Sep 02, 2022 - 2:46pm Plotted by: jkelly

RELATIVE BORDER SCALE IN INCHES 0 1 2 3

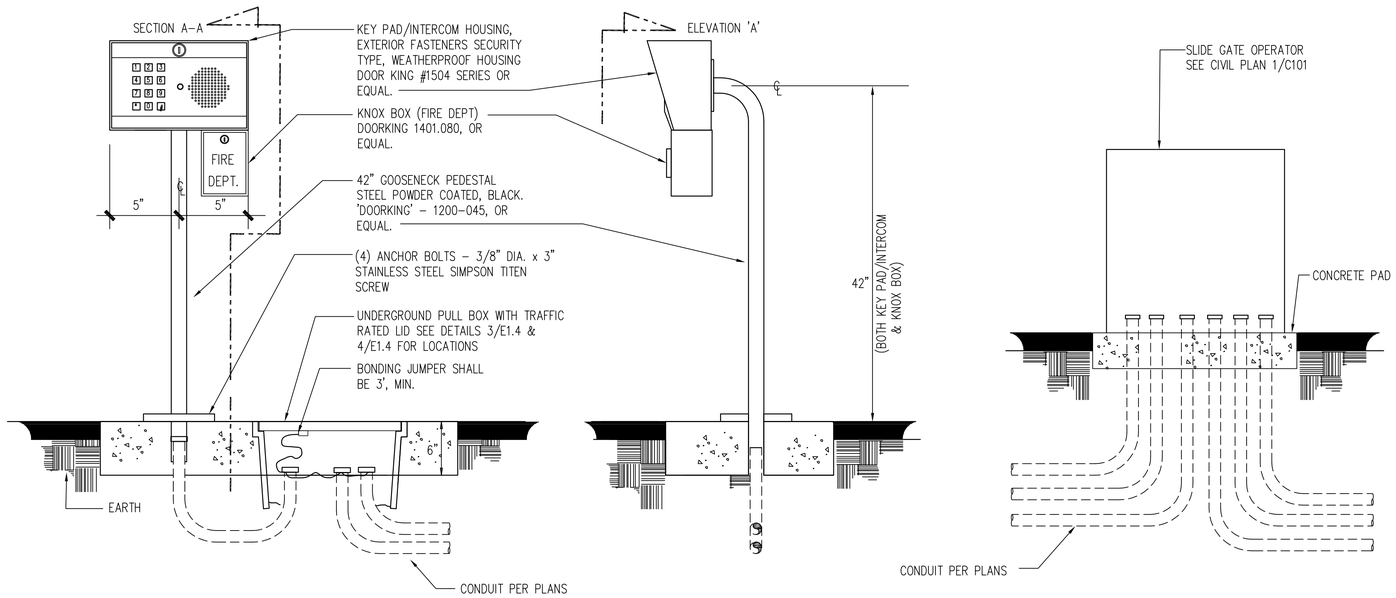

3 GATE KEY PAD AND OPERATOR DETAIL — NO SCALE

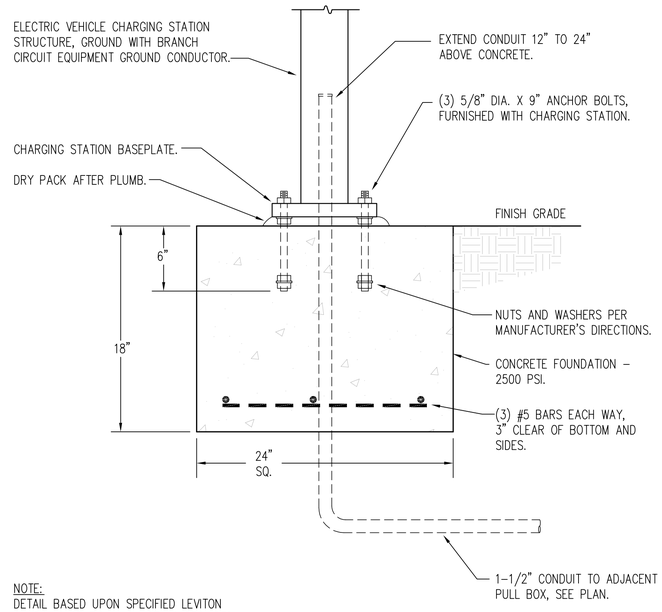

NOTE:
DETAIL BASED UPON SPECIFIED LEVITON CHARGING STATION, ADJUST AS REQUIRED FOR ANY SUBSTITUTE PRODUCT.

2 ELEC. VEHICLE CHARGING STATION MOUNTING — NO SCALE

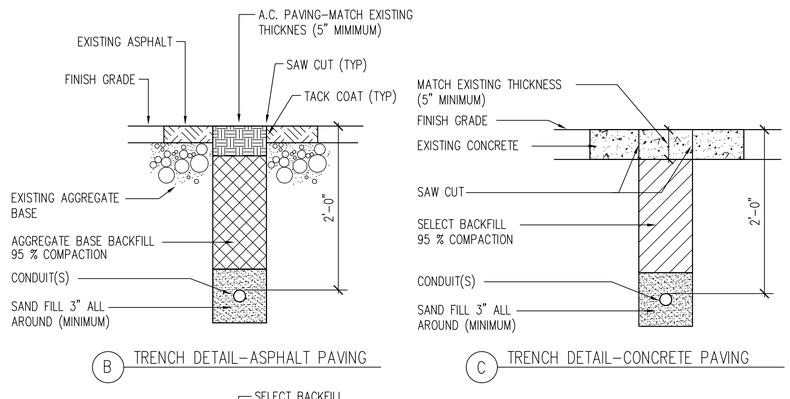

E16_UG07

5 TYPICAL TRENCH DETAIL — NO SCALE

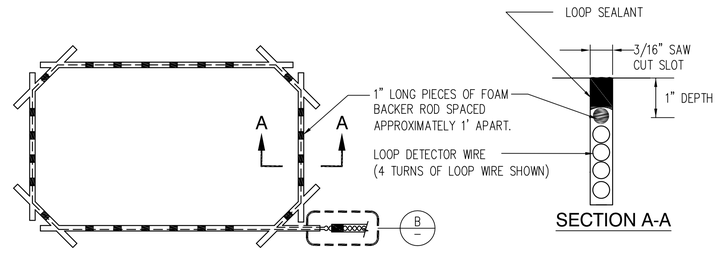

NOTES FOR TYPICAL LOOP LAYOUT:

1. DEPTH OF SAW CUT WILL VARY DEPENDING ON THE NUMBER OF WIRE TURNS, TYPICALLY 1 1/2" FOR 1–3 TURNS AND 2" FOR 4–6 TURNS. THE SAW CUT MUST BE FREE FROM LOOSE DEBRIS.
2. THE LOOP SHALL BE RECTANGLE WITH 45 DEGREE ANGLED CORNERS. DO NOT ALLOW THE RECTANGLE SAW CUTS TO CONNECT IN THE CORNERS OR THE TRIANGLE PIECES THAT ARE CREATED WILL EVENTUALLY BREAK FREE FROM THE ROADWAY.
3. THE LOOP WIRE SHALL BE 18 AWG CROSS LINKED POLYETHYLENE (XLPE) INSULATED WIRE WITH COLD SEALANT.
4. THE LOOP WIRES MUST BE HELD SECURELY IN THE BOTTOM OF THE SLOT BY MEANS OF A PLASTIC FOAM TYPE MATERIAL CALLED "BACKER ROD".
5. THE LEAD–IN WIRE IS A CONTINUATION OF THE LOOP WIRE (NO SPLICING). THE LEAD–IN WIRE MUST BE TIGHTLY TWISTED TOGETHER WITH A MINIMUM OF 6 TURNS PER FOOT. USE TAPE ON THE TWISTED END TO HOLD THE WIRES TOGETHER. THIS PREVENTS FALSE CALLS FROM MOVEMENT BETWEEN THE WIRES.

CAUTION: DO NOT FRACTURE WIRE INSULATION. LOOPS SHORTED TO GROUND WILL CAUSE DETECTOR MALFUNCTION. WHEN PLACING WIRE IN THE SLOT, DO NOT USE SCREWDRIVER OR OTHER SHARP TOOLS.

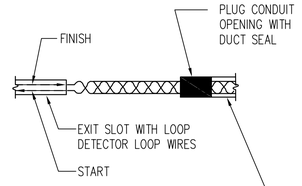

1/2"C, LOOP LEAD–IN WIRE REFER TO SITE PLAN FOR LOCATION.

THE NUMBER OF WIRE TURNS REQUIRED FOR EACH LOOP LOOP AREA (SQ. FT.) MULTIPLY LOOP WIDTH BY LOOP LENGTH

LOOP AREA IN SQUARE FEET	NUMBER OF TURNS REQUIRED
6–12	6
12–60	4
60–240	3

4 VEHICLE SENSING LOOP DETAIL — NO SCALE

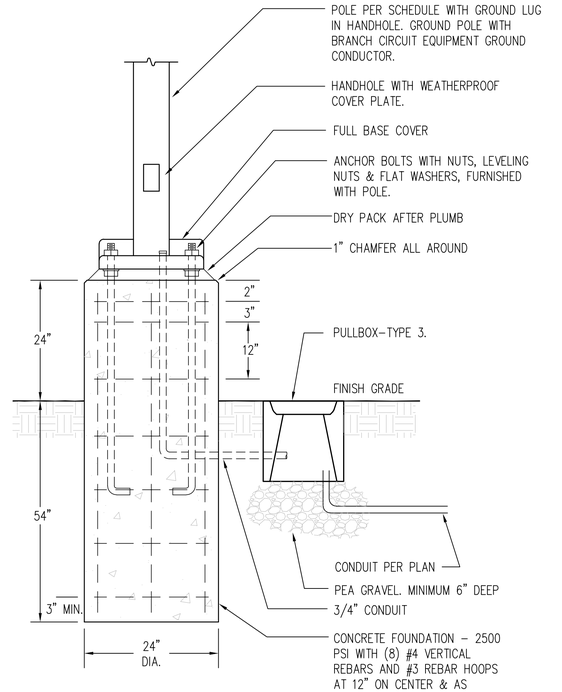

E16_SL01_POLE BASE.DWG

1 POLE BASE DETAIL - FIXTURE TYPES H1-H6 — NO SCALE

IDENTIFICATION STAMP
DIV. OF THE STATE ARCHITECT
APP: 03-121324 INC:
REVIEWED FOR
SS ☐ FLS ☐ ACS ☑
DATE: 09/14/2022

OFFICE OF THE STATE FIRE MARSHAL
APPROVED FIRE AND PANIC ONLY
09/07/22
21-0233
Approval of this plan does not authorize or approve any omission or deviation from applicable regulations. Final approval is subject to field inspection. One set of approved plans shall be available on the project site at all times.

DGS GENERAL SERVICES
Department of General Services
Architecture & Engineering Sections
State of California
Real Estate Services Division
Project Management & Development Branch
707 Third Street, Suite 4-105
West Sacramento, California 95605

REGISTERED PROFESSIONAL ENGINEER
JOSEPH H ABDELSAYD
No. E–18915
ELECTRICAL
STATE OF CALIFORNIA

DMV
State of California
Department of Motor Vehicles

Issue		
No.	Date	Description
1	9/2/22	

Project
SANTA MARIA FIELD OFFICE REPLACEMENT
2770 SANTA MARIA WAY
SANTA MARIA, CA 93455
SANTA BARBARA COUNTY

DEPT OF MOTOR VEHICLES

Supervisor	Designed	Drawn
J.ABDELSAYD	JK/MP/TL	JK/MP/TL

DSA App No.	SFM Permit No.
03-121324	21-S-0233-CP-ER

Sheet Title
DETAILS - SITE

Project Number
DGS000000140725

Reference North | Sheet Scale: AS NOTED | Sheet Number: E501

Copyright © 2022, California Department of General Services - Real Estate Services Division

CAD File: X:\Projects\14xxxx\140725\DWG\PLTIE501.dwg Plot Date: Jul 11, 2022 - 5:18pm Plotted by: jkelly

RELATIVE BORDER SCALE IN INCHES 0 1 2 3

IDENTIFICATION STAMP
DIV. OF THE STATE ARCHITECT
APP: 03-121324 INC:
REVIEWED FOR
SS ☐ FLS ☐ ACS ☑
DATE: 09/14/2022

OFFICE OF THE STATE FIRE MARSHAL
APPROVED FIRE AND PANIC ONLY
09/07/22
21-0233
Approval of this plan does not authorize or approve any omission or deviation from applicable regulations. Final approval is subject to field inspection. One set of approved plans shall be available on the project site at all times.

NOTE:
DIMENSIONS SHOWN ARE TYPICAL AND APPLY UNLESS OTHERWISE NOTED.

NOTE:
WHERE POSSIBLE, LOCATE WITHIN 6" OF DOOR JAMB.

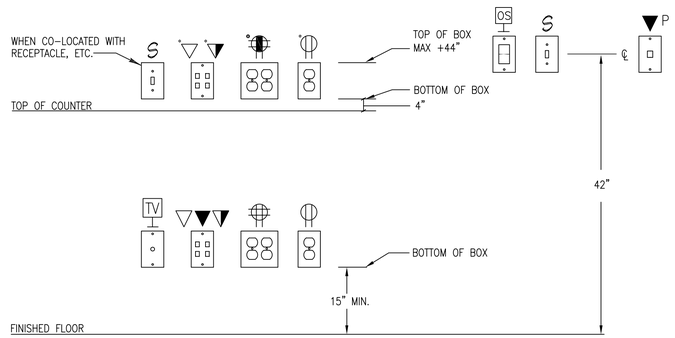

4 TYPICAL DEVICE MOUNTING — NOT TO SCALE

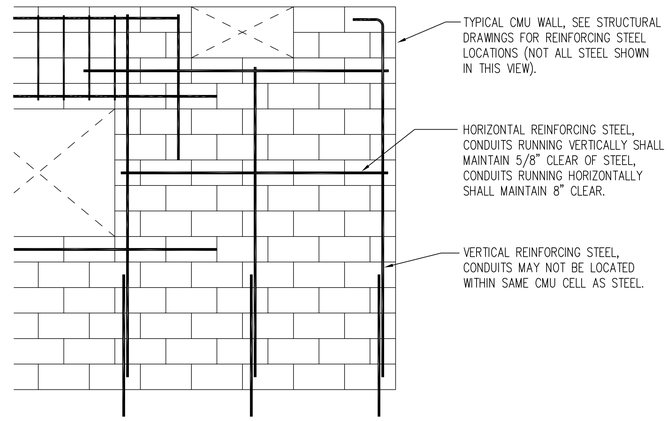

EDT_Cx01_CMU.DWG

3 CONDUITS INSTALLED IN CMU WALLS — NOT TO SCALE

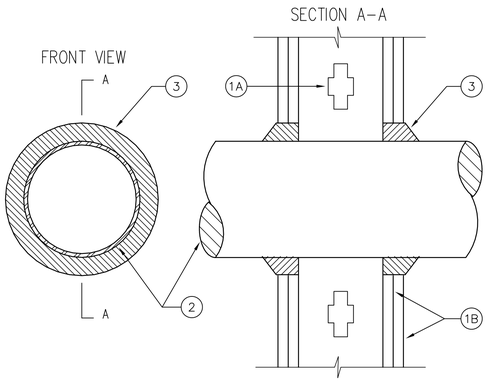

SYSTEM U.L. NO. W-L-1001
F RATINGS – 1,2,3 AND 4 HR (SEE ITEMS 2 AND 3)
T RATINGS – 0,1,2,3 AND 4 HR (SEE ITEM 3)
L RATING AT AMBIENT – LESS THAN 1 CFM/SQ FT
L RATING AT 400° F – LESS THAN 1 CFM/SQ FT

MAXIMUM PIPE OR CONDUIT DIAMETER	F RATING HR	T RATING HR
1 in.	1 OR 2	0+, 1 OR 2
1 in.	3 OR 4	3 OR 4
4 in.	1 OR 2	0
6 in.	3 OR 4	0
12 in.	1 OR 2	0

* 3M COMPANY – CP 25WB+ CAULK OR FB-300 WT SEALANT

1. WALL ASSEMBLY – THE 1,2,3 OR 4 HR FIRE-RATED GYPSUM WALLBOARD/STUD WALL ASSEMBLY SHALL BE CONSTRUCTED OF THE MATERIALS AND IN THE MANNER DISCRIBED IN THE INDIVIDUAL U300 OR U400 SERIES WALL OR PARTITION DESIGNS IN THE UL FIRE RESISTANCE DIRECTORY AND SHALL INCLUDE THE FOLLOWING CONSTRUCTION FEATURES:
   A. STUDS – WALL FRAMING MAY CONSIST OF EITHER WOOD (MAX. 2HR FIRE RATED ASSEMBLIES) OR STEEL CHANNEL STUDS. WOOD STUDS TO CONSIST OF NOM 2"x4" LUMBER SPACED 16" O.C. WITH NOM 2"x4" LUMBER END PLATES AND CROSS BRACES. STEEL STUDS TO BE MIN. 3-5/8" WIDE BY 1-3/8" DEEP CHANNELS SPACED MAX. 24" O.C.
   B. GYPSUM BOARD – NOM 1/2" OR 5/8" THICK, 4' WIDE WITH SQUARE OR TRIANGLE EDGES. THE GYPSUM WALLBOARD TYPE, THICKNESS, NUMBER OF LAYERS, FASTENER TYPE AND SHEET ORIENTATION SHALL BE AS SPECIFIED IN THE INDIVIDUAL U300 OR U400 SERIES DESIGN IN THE UL FIRE RESISTANCE DIRECTORY. MAX. DIAMETER OF OPENING IS 26".
2. THROUGH PENETRANT – ONE METALLIC PIPE, CONDUIT OR TUBING INSTALLED CONCENTRICALLY OR ECCENTRICALLY WITHIN THE FIRE STOP SYSTEM. THE ANNULAR SPACE BETWEEN PIPE, CONDUIT OR TUBING AN PERIPHERY OF OPENING SHALL BE MIN. OF 0" (POINT CONTACT) TO MAX. 2". PIPE, CONDUIT OR TUBING TO BE RIGIDLY SUPPORTED ON BOTH SIDE OF WALL ASSEMBLY. THE FOLLOWING TYPES AND SIZES OF METALLIC PIPES, CONDUITS OR TUBING MAY BE USED:
   A. STEEL PIPE – NOM 24" DIA. (OR SMALLER) SHCEDULE 10 (OR HEAVIER) STEEL PIPE.
   B. CONDUIT – NOM 6" DIA. (OR SMALLER) STEEL CONDUIT OR NOM 4" (OR SMALLER) STEEL ELECTRICAL METALLIC TUBING.
3. FILL, VOID OR CAVITY MATERIAL* – CAULK OR SEALANT – MIN 5/8", 1-1/4", 1-7/8" AND 2-1/2" THICKNESS OF CAULK FOR 1,2,3 AND 4 HR RATED ASSEMBLIES, RESPECTIVELY, APPLIED WITHIN ANNULUS, FLUSH WITH BOTH SURFACES OF WALL. MIN 1/4" DIA. BEAD OF CAULK APPLIED TO GYP. BOARD/PENETRANT INTERFACE AT POINT CONTACT LOCATION ON BOTH SIDES OF WALL. THE HOURLY FIRE RATING OF THE FIRE STOP SYSTEM IS DEPENDANT UPON THE HOURLY FIRE RATING OF THE WALL ASSEMBLY IN WHICH IT ISINSTALLED, AS SHOWN IN TABLE. T HOURLY RATING OF THE FIRE STOP SYSTEM IS DEPENDANT UPON THE TYPE OR SIZE OF THE PIPE OR CONDUIT AND THE HOURLY FIRE RATING OF THE WALL ASSEMBLY IN WHICH IT IS INSTALLED, AS SHOWN IN TABLE.

2 CONDUIT PENETRATION THRU FIRE RATED WALL — NO SCALE

TYPE MPP+ MOLDABLE PUTTY PADS FOR USE WITH MAX 4-11/16 BY 4-11/16 BY 2-1/8" DEEP FLUSH DEVICE UL LISTED METALLIC OUTLET BOXES INSTALLED WITH STEEL COVER PLATES FOR USE IN 1 HR OR 2 HR FIRE RATED GYPSUM BOARD WALL ASSEMBLIES FRAMED WITH MIN 3-1/2" WIDE WOOD OR STEEL STUDS AND CONSTRUCTED AS SPECIFIED IN THE INDIVIDUAL U300, U400 OR V400 SERIES WALL AND PARTITION DESIGNS IN THE FIRE RESISTANCE DIRECTORY.

TYPE MPP+ MOLDABLE PUTTY PADS FOR USE WITH MAX 4-11/16 BY 4-11/16 BY 2-1/8" DEEP FLUSH DEVICE UL LISTED METALLIC OUTLET BOXES INSTALLED WITH STEEL OR PLASTIC COVER PLATES FOR USE IN 1 HR OR 2 HR FIRE RATED GYPSUM BOARD WALL ASSEMBLIES FRAMED WITH MIN 5-1/2" WIDE WOOD OR STEEL STUDS AND CONSTRUCTED AS SPECIFIED IN THE INDIVIDUAL U300, U400 OR V400 SERIES WALL AND PARTITION DESIGNS IN THE FIRE RESISTANCE DIRECTORY. METALLIC OUTLET BOXES TO BE PROVIDED WITH STEEL ATTACHMENT BRACKETS WHICH OFFSET BOX MIN ¼" FROM STUD. PUTTY PAD TO BE AFFIXED TO THE BACK AND ALL FOUR SIDES OF THE BOX. BOXES MAY BE INSTALLED BACK-TO-BACK WITHIN THE STUD CAVITY. WHEN BACK-TO-BACK BOXES ARE INTERCONNECTED, A BALL OF PUTT IS TO BE INSTALLED TO PLUG THE OPEN END OF EACH ELECTRICAL METALLIC TUBE OR CONDUIT WITHIN THE OUTLET BOXES.

TYPE MPP+ MOLDABLE PUTTY PADS FOR USE WITH MAX 4 BY 4 BY 2-1/8" DEEP FLUSH DEVICE UL LISTED METALLIC OUTLET BOXES INSTALLED WITH PLASTIC COVER PLATES FOR USE IN 1 HR OR 2 HR FIRE RATED GYPSUM BOARD WALL ASSEMBLIES FRAMED WITH MIN 3-1/2" WIDE WOOD OR STEEL STUDS AND CONSTRUCTED AS SPECIFIED IN THE INDIVIDUAL U300, U400 OR V400 SERIES WALL AND PARTITION DESIGNS IN THE FIRE RESISTANCE DIRECTORY.

MOLDABLE PUTTY PADS ARE TO BE INSTALLED TO COMPLETELY COVER THE EXTERIOR SURFACES OF THE OUTLET BOX (EXCEPT FOR THE SIDE OF THE OUTLET BOX AGAINST THE STUD UNLESS OTHERWISE NOTED) INCLUDING NAILING TABS AND TO COMPLETELY SEAL AGAINST THE STUD WITHIN THE STUD CAVITY. MULTIPLE MOLDABLE PUTTY PADS MAY BE INSTALLED ON AN OUTLET BOX TO ATTAIN THE REQUIRED MINIMUM THICKNESS OF PUTTY MATERIAL. ADDITIONAL PUTTY MATERIAL USED TO SEAL AROUND EACH CONDUIT AND/OR CABLE FITTING ON THE EXTERIOR OF EACH BOX. A MIN 1/10" THICKNESS OF PUTTY MATERIAL IS REQUIRED ON THE EXTERIOR SURFACES OF FLUSH DEVICE BOXES IN 1 HR OR 2 HR FIRE RATED WALL AND PARTITION DESIGNS. WHEN THE MOLDABLE PUTTY PAD OUTLET BOX PROTECTIVE MATERIAL IS USED ON BOXES ON BOTH SIDES OF WALL AS DIRECTED, THE HORIZONTAL SEPARATION BETWEEN OUTLET BOXES ON OPPOSITE SIDES OF THE WALL MAY BE LESS THAN 24" PROVIDED THAT THE OUTLET BOXES ARE NOT INSTALLED BACK-TO-BACK, EXCEPT AS NOTED.

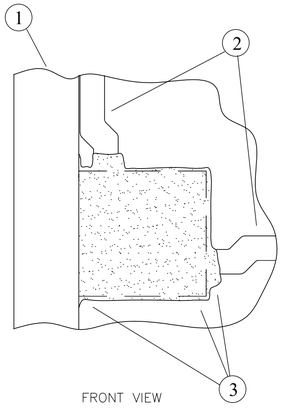

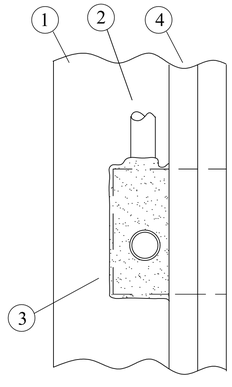

INSTALLATION FOR 3M FIRE BARRIER MOLDABLE PUTTY+ PADS ON ELECTRICAL OUTLET BOXES
SYSTEM NO. UL CLIV REQUESTED F RATING – 1 AND 2 HR

MATERIALS:
1. STEEL OR WOOD STUDS
2. CONDUIT (EMT)
3. 3M FIRE BARRIER MOLDABLE PUTTY
4. 1 OR 2 HOUR FIRE RATED GYPSUM – CEILING/WALLBOARD ASSEMBLY

NOTES:
A. ELECTRICAL BOX MUST BE WIPED CLEAN OF JOBSITE DIRT/DUST INCLUDING ALL SIDES (TOP AND BOTTOM).
B. BEGIN INSTALLATION BY INSTALLING THE PUTTY PAD FROM THE BOTTOM OF THE BOX TO THE TOP OF THE BOX.

1 JUNCTION BOX FIRE BARRIER - MOLDABLE PUTTY PAD — NTS

DGS GENERAL SERVICES
Department of General Services
Architecture & Engineering Sections
State of California
Real Estate Services Division
Project Management & Development Branch
707 Third Street, Suite 4-105
West Sacramento, California 95605

REGISTERED PROFESSIONAL ENGINEER
JOSEPH H ABDELSAYD
No. E-18915
ELECTRICAL
STATE OF CALIFORNIA

DMV
State of California
Department of Motor Vehicles

Issue

No.	Date	Description
1	9/2/22	

Project
SANTA MARIA FIELD OFFICE REPLACEMENT

2770 SANTA MARIA WAY
SANTA MARIA, CA 93455
SANTA BARBARA COUNTY

DEPT OF MOTOR VEHICLES

Supervisor	Designed	Drawn
J.ABDELSAYD	JK/MP	JK/MP

DSA App No. 03-121324
SFM Permit No. 21-S-0233-CP-ER

Sheet Title
DETAILS - GENERAL

Project Number
DGS000000140725

Reference North
Sheet Scale AS NOTED
Sheet Number E511

Copyright © 2022, California Department of General Services - Real Estate Services Division

CAD File: X:\Projects\14xxxx\140725\DWG\PLTE511.dwg Plot Date: Jul 11, 2022 - 5:18pm Plotted by: jkelly

RELATIVE BORDER SCALE IN INCHES 0 1 2 3

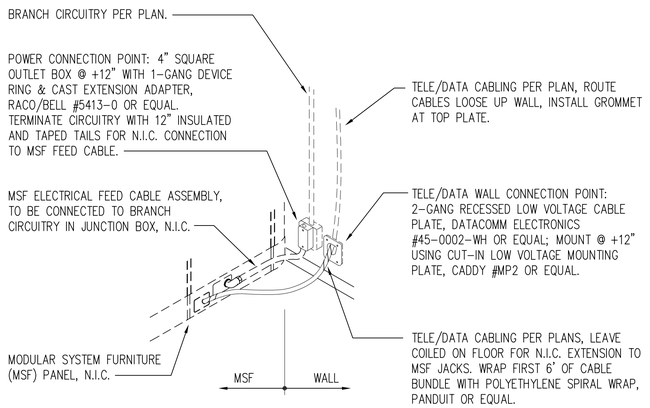

3 MSF WALL FEED DETAIL — NOT TO SCALE

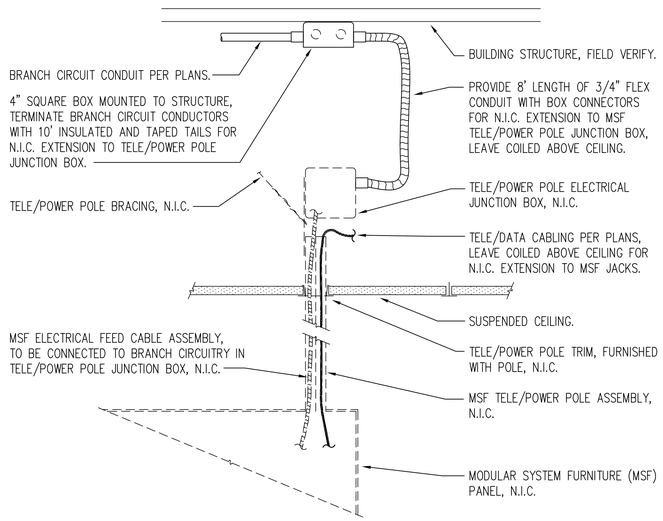

2 MSF POWER POLE FEED DETAIL — NOT TO SCALE

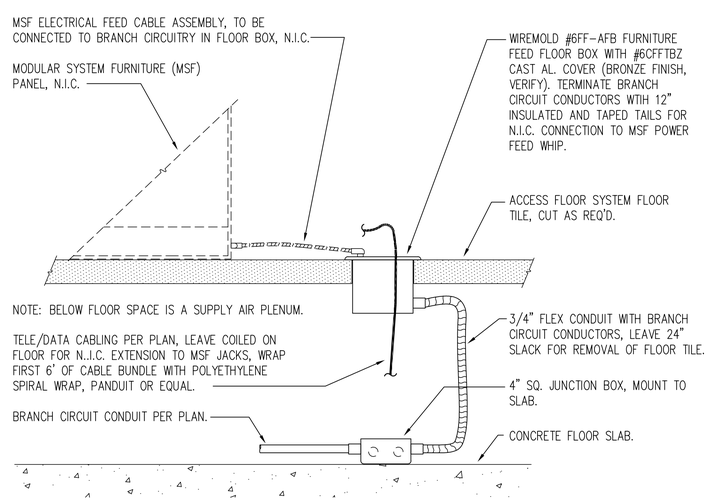

1 MSF FLOOR FEED DETAIL — NOT TO SCALE

IDENTIFICATION STAMP
DIV. OF THE STATE ARCHITECT
APP: 03-121324 INC:
REVIEWED FOR
SS ☐ FLS ☐ ACS ☑
DATE: 09/14/2022

OFFICE OF THE STATE FIRE MARSHAL
APPROVED FIRE AND PANIC ONLY
09/07/22
21-0233
Approval of this plan does not authorize or approve any omission or deviation from applicable regulations. Final approval is subject to field inspection. One set of approved plans shall be available on the project site at all times.

DGS GENERAL SERVICES

Department of General Services
Architecture & Engineering Sections
State of California
Real Estate Services Division
Project Management & Development Branch
707 Third Street, Suite 4-105
West Sacramento, California 95605

REGISTERED PROFESSIONAL ENGINEER — JOSEPH H ABDELSAYED — No. E-18915 — ELECTRICAL — STATE OF CALIFORNIA

DMV
State of California
Department of Motor Vehicles

Issue		
No.	Date	Description
1	9/2/22	

Project
SANTA MARIA FIELD OFFICE REPLACEMENT
2770 SANTA MARIA WAY
SANTA MARIA, CA 93455
SANTA BARBARA COUNTY

DEPT OF MOTOR VEHICLES

Supervisor	Designed	Drawn
J.ABDELSAYD	JK/MP	JK/MP

DSA App No. 03-121324
SFM Permit No. 21-S-0233-CP-ER

Sheet Title
DETAILS - GENERAL

Project Number
DGS000000140725

Reference North
Sheet Scale AS NOTED
Sheet Number E512

Copyright © 2022, California Department of General Services - Real Estate Services Division

CAD File: X:\Projects\114xxxx\140725\DWG\PLTE512.dwg Plot Date: Jul 11, 2022 - 5:19pm Plotted by: jkelly

RELATIVE BORDER SCALE IN INCHES 0 1 2 3

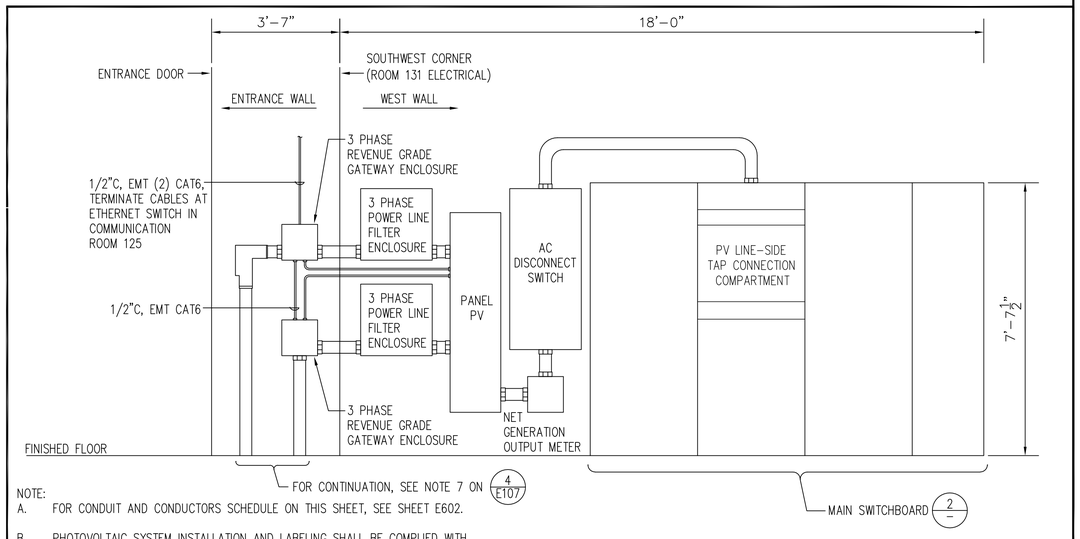

NOTE:
A. FOR CONDUIT AND CONDUCTORS SCHEDULE ON THIS SHEET, SEE SHEET E602.

B. PHOTOVOLTAIC SYSTEM INSTALLATION AND LABELING SHALL BE COMPLIED WITH REQUIREMENTS OF CALIFORNIA ELECTRICAL CODE 2019 ARTICLE 690.

5 PV APPARATUS ELEVATION — 1/2"=1'–0"

CURRENT TRANSFORMERS (ELECTRO INDUSTRIES/GAUGE TECH MODEL NUMBERS SHOWN AS BASIS OF DESIGN)
40A BREAKER – SOLID CORE, 50/5 RATIO, #EI–2DARL–500
70A BREAKER – SOLID CORE, 100/5 RATIO, #EI–2DARL–101
100A BREAKER – SPLIT CORE, 100/5 RATIO, #EI–WC4–100–RA05
200A BREAKER – SPLIT CORE, 200/5 RATIO, #EI–WC4–200–RA05
225A, 350A & 400A BREAKER – SPLIT CORE, 400/5 RATIO, #EI–WC4–400–RA05
600A BREAKER – SPLIT CORE, 600/5 RATIO, #EI–WC5–600–RA05
800A BREAKER – SPLIT CORE, 800/5 RATIO, #EI–WC5–800–RA05
1200A BREAKER – SPLIT CORE, 1200/5 RATIO, #EI–WC6–1200–RA05

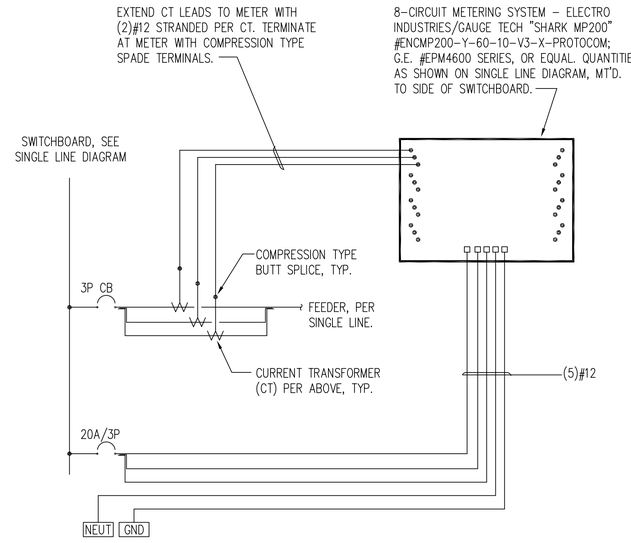

NOTES:
1. TYPICAL CONNECTION OF (1) METERED FEEDER SHOWN, SEE SINGLE LINE DIAGRAM FOR QUANTITIES REQUIRED.
2. CT'S FOR SPARE BREAKERS SHALL BE LABELED WITH BREAKER IDENTIFICATION AND STORED ON SITE AS DIRECTED.

4 METERING SYSTEM SCHEMATIC — NO SCALE

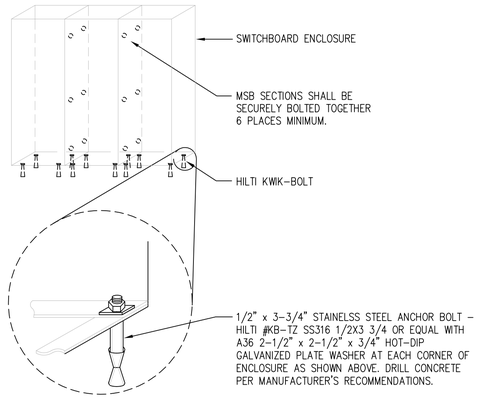

E16_SW05

3 SWITCHBOARD MOUNTING DETAIL — NO SCALE

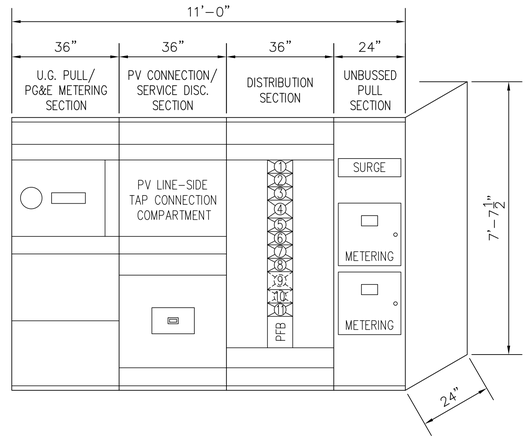

NOTE: LAYOUT SHOWN IS BASED UPON SQUARE D "QED–2" SERIES, CONTRACTOR IS RESPONSIBLE FOR DIMENSIONAL SUITABILITY OF ANY SUBSTITUTE EQUIPMENT.

2 MSB ELEVATION — 1/2"=1'–0"

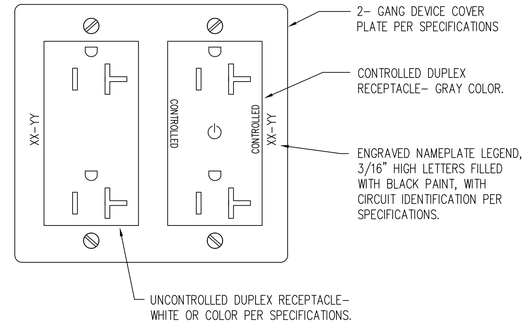

1 CONTROLLED/ UNCONTROLLED FOURPLEX RECPTACLE — NO SCALE

IDENTIFICATION STAMP
DIV. OF THE STATE ARCHITECT
APP: 03-121324 INC:
REVIEWED FOR
SS ☐ FLS ☐ ACS ☑
DATE: 09/14/2022

OFFICE OF THE STATE FIRE MARSHAL
APPROVED FIRE AND PANIC ONLY
09/07/22
21-0233
Approval of this plan does not authorize or approve any omission or deviation from applicable regulations. Final approval is subject to field inspection. One set of approved plans shall be available on the project site at all times.

DGS GENERAL SERVICES
Department of General Services
Architecture & Engineering Sections
State of California
Real Estate Services Division
Project Management & Development Branch
707 Third Street, Suite 4-105
West Sacramento, California 95605

REGISTERED PROFESSIONAL ENGINEER
JOSEPH H ABDELSAYED
No. E–18915
ELECTRICAL
STATE OF CALIFORNIA

DMV
State of California
Department of Motor Vehicles

Issue		
No.	Date	Description
1	9/2/22	

Project
SANTA MARIA FIELD OFFICE REPLACEMENT
2770 SANTA MARIA WAY
SANTA MARIA, CA 93455
SANTA BARBARA COUNTY
DEPT OF MOTOR VEHICLES

Supervisor	Designed	Drawn
J.ABDELSAYD	JK/MP/TL	JK/MP/TL

DSA App No.	SFM Permit No.
03-121324	21-S-0233-CP-ER

Sheet Title
DETAILS - POWER

Project Number
DGS000000140725

Reference North
Sheet Scale AS NOTED
Sheet Number E521

© Copyright 2022, California Department of General Services - Real Estate Services Division

CAD File: X:\Projects\14xxxx\140725\DWG\PLTE521.dwg Plot Date: Jul 11, 2022 - 5:19pm Plotted by: jkelly

RELATIVE BORDER SCALE IN INCHES 0 1 2 3

IDENTIFICATION STAMP
DIV. OF THE STATE ARCHITECT
APP: 03-121324 INC:
REVIEWED FOR
SS ☐ FLS ☐ ACS ☑
DATE: 09/14/2022

OFFICE OF THE STATE FIRE MARSHAL
APPROVED FIRE AND PANIC ONLY
09/07/22
21-0233
Approval of this plan does not authorize or approve any omission or deviation from applicable regulations. Final approval is subject to field inspection. One set of approved plans shall be available on the project site at all times.

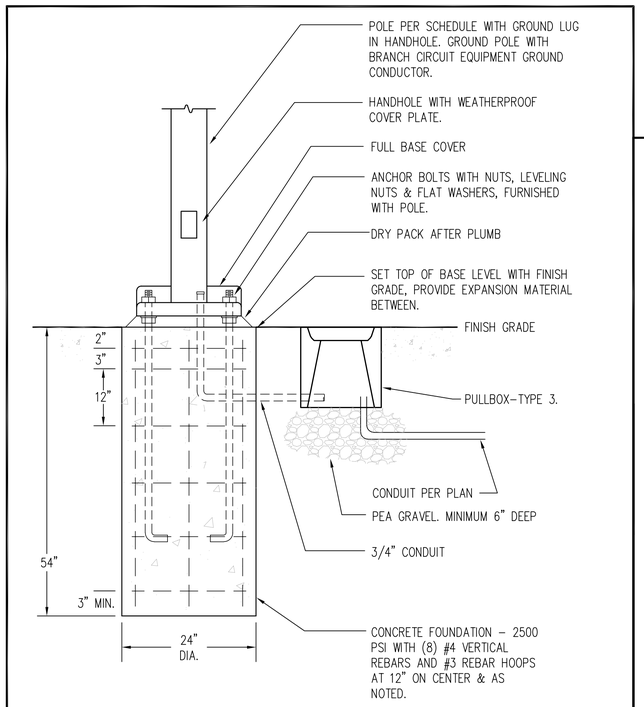

E16_SL02_POLE BASE.DWG

4 POLE BASE DETAIL - FIXTURE TYPES H7 & H7A — NO SCALE

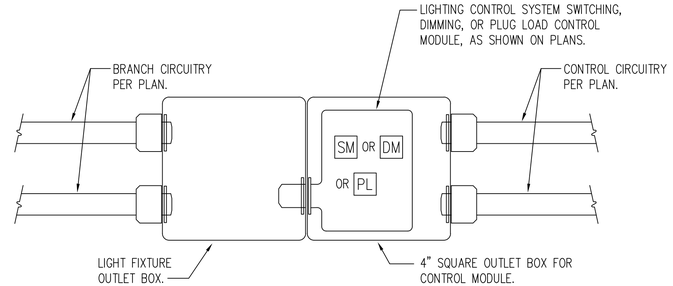

3 LIGHTING CONTROL MODULE MOUNTING — NOT TO SCALE

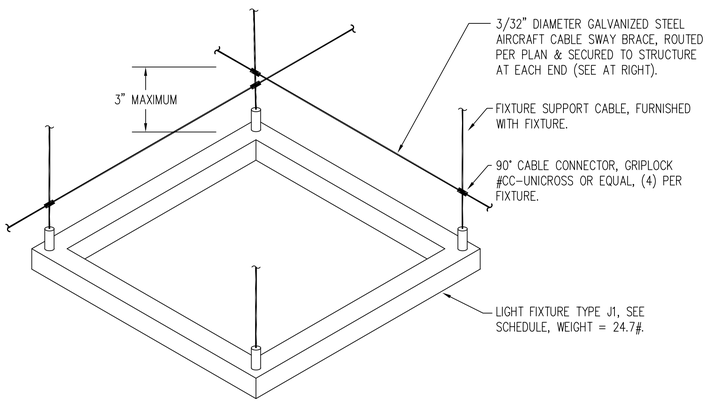

OVERALL VIEW

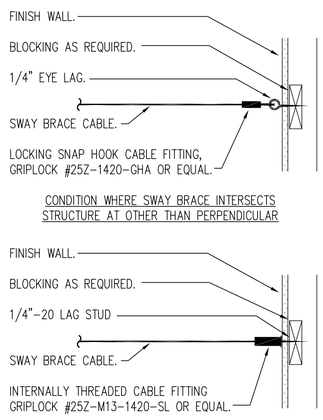

CONDITION WHERE SWAY BRACE INTERSECTS STRUCTURE AT OTHER THAN PERPENDICULAR

CONDITION WHERE SWAY BRACE INTERSECTS STRUCTURE AT PERPENDICULAR

2 FIXTURE J1 SEISMIC SWAY BRACING — NTS

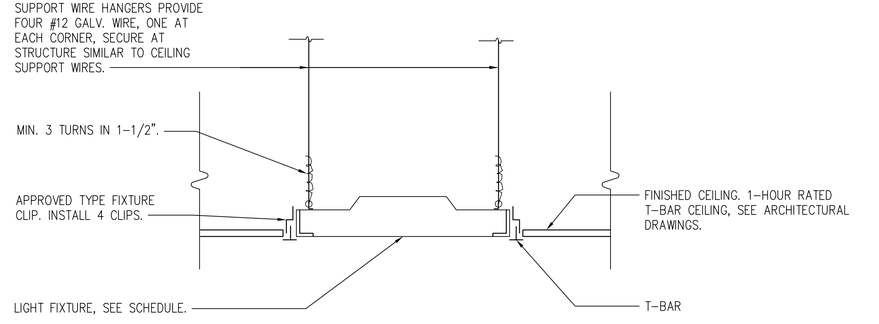

NOTE: INSTALLATION SHALL MEET ALL UL REQUIREMENTS

E16_LT09

1 TYPICAL RECESSED LIGHT FIXTURE (T-BAR) INSTALLATION — NTS

GENERAL SERVICES
Department of General Services
Architecture & Engineering Sections
State of California
Real Estate Services Division
Project Management & Development Branch
707 Third Street, Suite 4-105
West Sacramento, California 95605

REGISTERED PROFESSIONAL ENGINEER
JOSEPH H ABDELSAYD
No. E–18915
ELECTRICAL
STATE OF CALIFORNIA

State of California
Department of Motor Vehicles

Issue

No.	Date	Description
1	9/2/22	

Project
SANTA MARIA FIELD OFFICE REPLACEMENT

2770 SANTA MARIA WAY
SANTA MARIA, CA 93455
SANTA BARBARA COUNTY

DEPT OF MOTOR VEHICLES

Supervisor	Designed	Drawn
J.ABDELSAYD	J. KELLY	J. KELLY

DSA App No.	SFM Permit No.
03-121324	21-S-0233-CP-ER

Sheet Title
DETAILS - LIGHTING

Project Number
DGS000000140725

Reference North | Sheet Scale AS NOTED | Sheet Number E531

Copyright © 2022, California Department of General Services - Real Estate Services Division

CAD File: X:\Projects\14xxxx\140725\DWG\PLTIE531.dwg Plot Date: Jul 11, 2022 - 5:19pm Plotted by: jkelly

RELATIVE BORDER SCALE IN INCHES 0 1 2 3

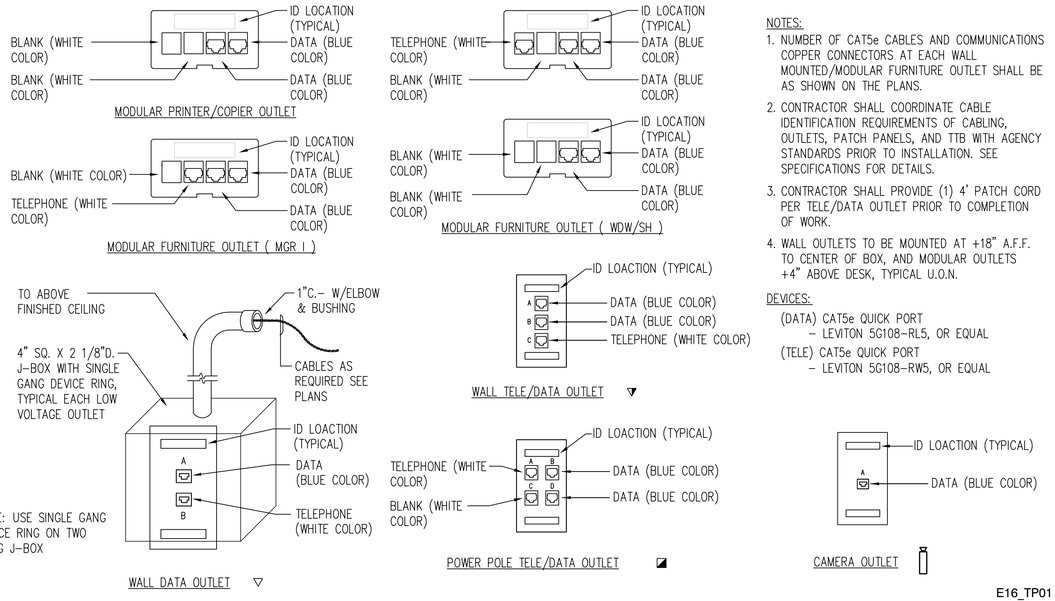

NOTES:

1. NUMBER OF CAT5e CABLES AND COMMUNICATIONS COPPER CONNECTORS AT EACH WALL MOUNTED/MODULAR FURNITURE OUTLET SHALL BE AS SHOWN ON THE PLANS.
2. CONTRACTOR SHALL COORDINATE CABLE IDENTIFICATION REQUIREMENTS OF CABLING, OUTLETS, PATCH PANELS, AND TTB WITH AGENCY STANDARDS PRIOR TO INSTALLATION. SEE SPECIFICATIONS FOR DETAILS.
3. CONTRACTOR SHALL PROVIDE (1) 4' PATCH CORD PER TELE/DATA OUTLET PRIOR TO COMPLETION OF WORK.
4. WALL OUTLETS TO BE MOUNTED AT +18" A.F.F. TO CENTER OF BOX, AND MODULAR OUTLETS +4" ABOVE DESK, TYPICAL U.O.N.

DEVICES:

(DATA) CAT5e QUICK PORT
– LEVITON 5G108–RL5, OR EQUAL
(TELE) CAT5e QUICK PORT
– LEVITON 5G108–RW5, OR EQUAL

E16_TP01

1 LOW VOLTAGE DEVICE OUTLET — NO SCALE

NOTE:

PROVIDE AND INSTALL IN IDF/TELECOM RM 08621:

- (1) 4–POST VERTICAL SERVER RACK (45U)
- (2) 2–POST VERTICAL TELECOM RACK (45U)
- (16) RACK MOUNTED HORIZONTAL CABLE MANAGERS (SINGLE SIDED)
- (3) RACK MOUNTED VERTICAL CABLE MANAGERS (DOUBLE SIDED)
- (6) 48–PORT CAT6 PATCH PANELS, PANDUIT – CPPL48WBLY, OR EQUAL.
- (3) 24–PORT CAT6 PATCH PANELS, PANDUIT – CPPL24BLY, OR EQUAL.
- (2) 48–PORT TO 110 CAT5 LEVEL 6 PATCH PANELS, PANDUIT – DP485E88TGY, OR EQUAL.
- MOUNTING: 1/2" DIAMETER HILTI KWIK BOLT TZ EXPANSION ANCHORS W/MINIMUM 2–1/2" EMBEDMENT (4) PER SECTION, COORDINATE MOUNTING LOCATION WITH MANUFACTURER EQUIPMENT PRIOR TO INSTALLATION

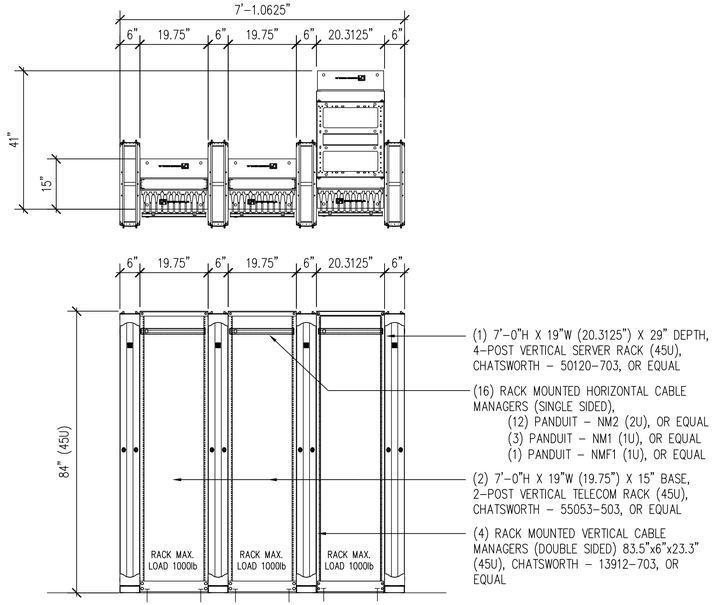

2 TELECOMMUNICATIONS RACKS — NO SCALE

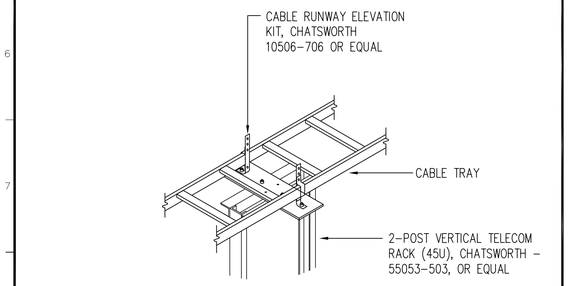

2-POST RACK APPLICATION

E16_CB05

3 CABLE TRAY SUPPORT KIT — NO SCALE

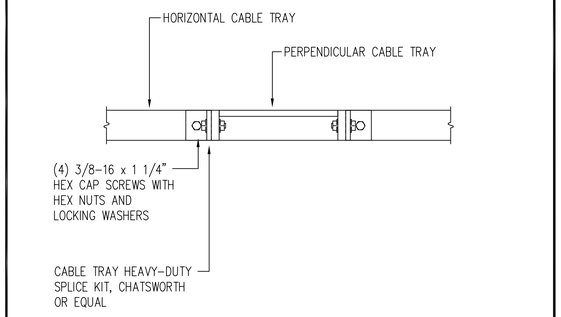

E16_CB04

4 CABLE TRAY SPLICE KIT — NO SCALE

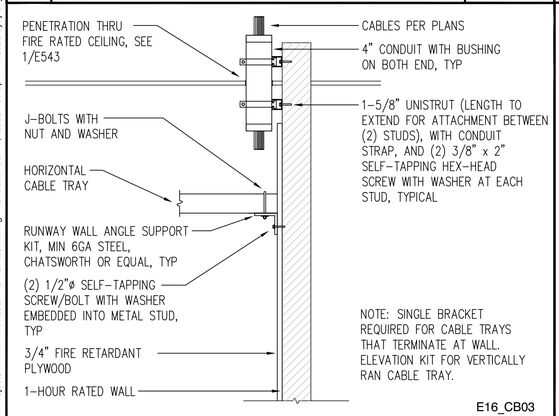

E16_CB03

5 ANGLE/ELEVATION SUPPORT KIT — NO SCALE

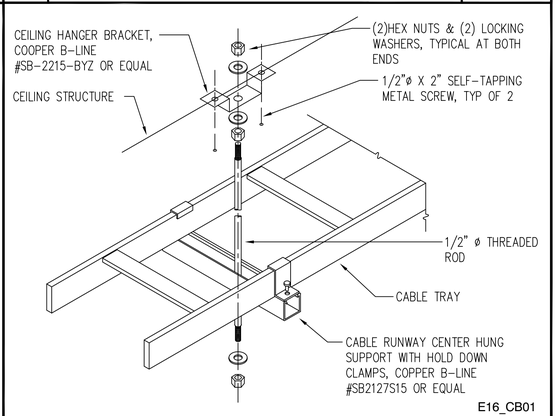

E16_CB01

6 CABLE TRAY CENTER SUPPORT — NO SCALE

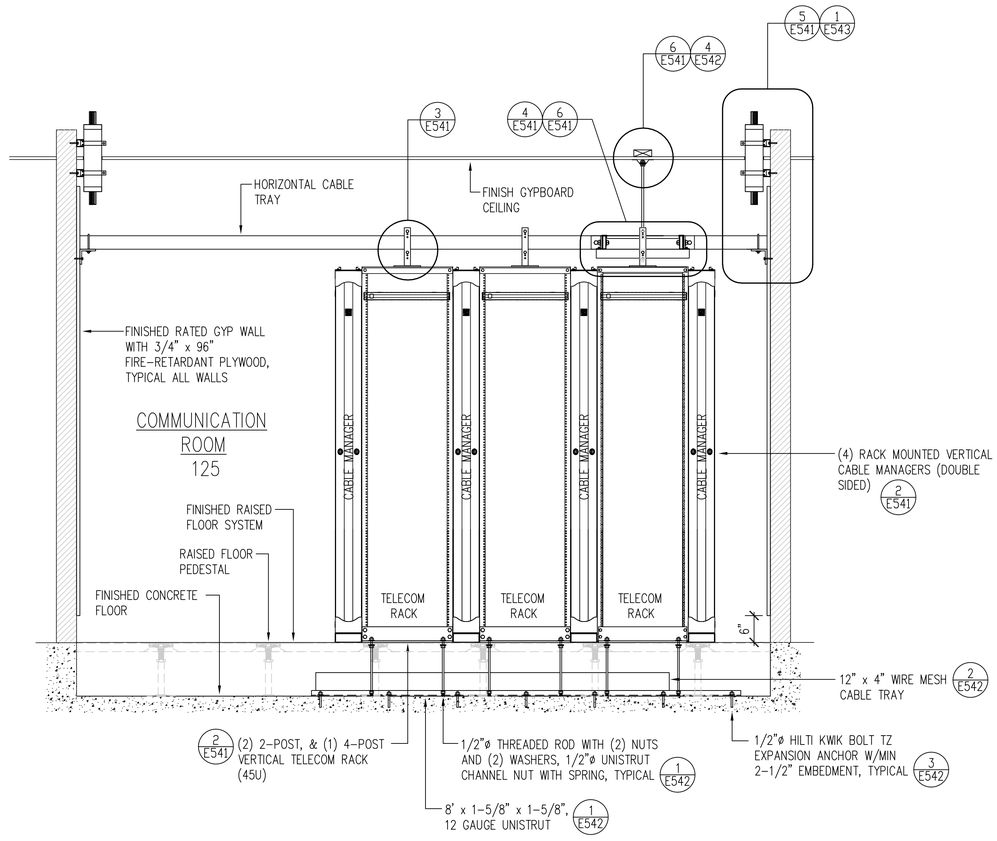

7 COMMUNICATIONS ROOM EQUIPMENT ELEVATION — NO SCALE

IDENTIFICATION STAMP
DIV. OF THE STATE ARCHITECT
APP: 03-121324 INC: A
REVIEWED FOR
SS ☐ FLS ☐ ACS ☑
DATE: 09/14/2022

OFFICE OF THE STATE FIRE MARSHAL
APPROVED FIRE AND PANIC ONLY
09/07/22
21-0233
Approval of this plan does not authorize or approve any omission or deviation from applicable regulations. Final approval is subject to field inspection. One set of approved plans shall be available on the project site at all times.

DGS GENERAL SERVICES
Department of General Services
Architecture & Engineering Sections
State of California
Real Estate Services Division
Project Management & Development Branch
707 Third Street, Suite 4-105
West Sacramento, California 95605

REGISTERED PROFESSIONAL ENGINEER
JOSEPH H ABDELSAYD
No. E–18915
ELECTRICAL
STATE OF CALIFORNIA

DMV
State of California
Department of Motor Vehicles

Issue

No.	Date	Description
1	9/2/22	
2		

Project
SANTA MARIA FIELD OFFICE REPLACEMENT
2770 SANTA MARIA WAY
SANTA MARIA, CA 93455
SANTA BARBARA COUNTY
DEPT OF MOTOR VEHICLES

Supervisor	Designed	Drawn
J.ABDELSAYD	M. PRINCE	M. PRINCE

DSA App No. 03-121324
SFM Permit No. 21-S-0233-CP-ER

Sheet Title
DETAILS - TELECOMM

Project Number
DGS000000140725

Reference North
Sheet Scale AS NOTED
Sheet Number E541

Copyright © 2022 California Department of General Services - Real Estate Services Division

CAD File: X:\Projects\14xxxx\140725\DWG\PLTE541.dwg Plot Date: Jul 11, 2022 - 5:19pm Plotted by: jkelly

RELATIVE BORDER SCALE IN INCHES 0 1 2 3

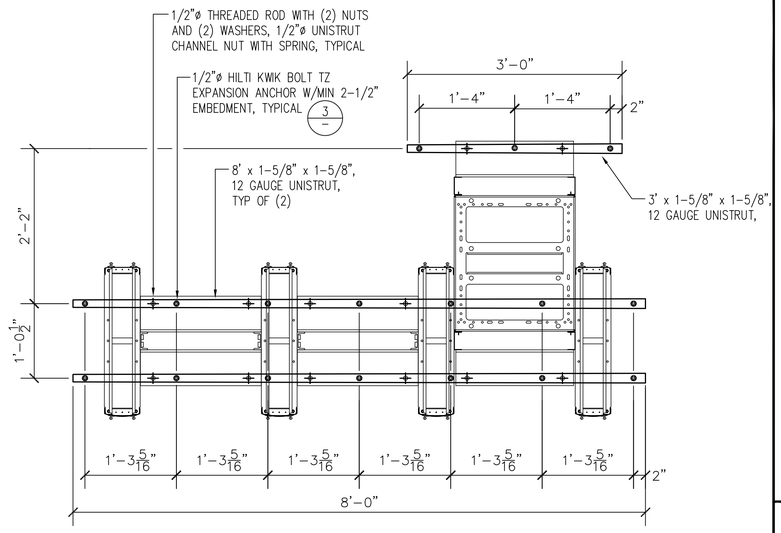

PLAN VIEW

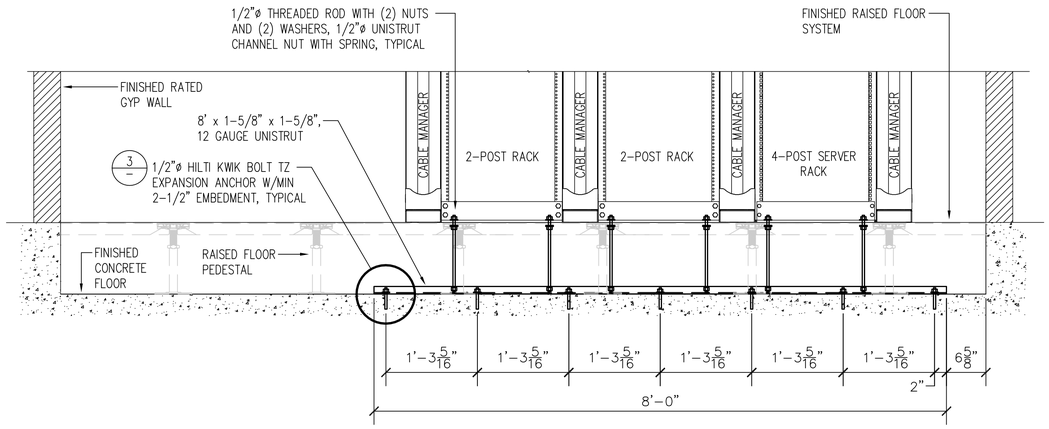

TELECOM ROOM ELEVATION

E16_DR03

1 TELE/DATA RACK MOUNTING — 1"=1'-0"

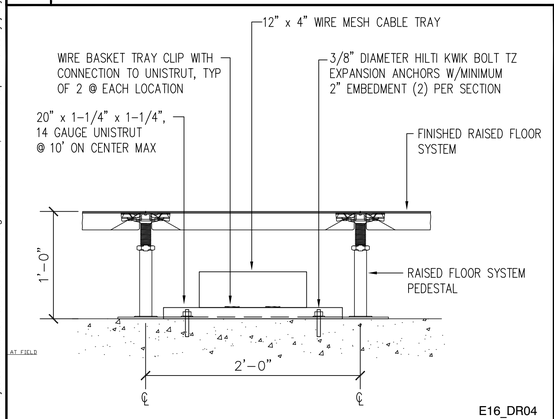

E16_DR04

2 CABLE TRAY BELOW RAISED FLOOR — 1-1/2"=1'-0"

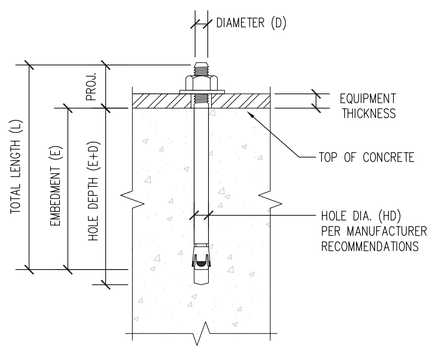

E16_DR05

3 ANCHOR INSTALLATION — 1"=1'-0"

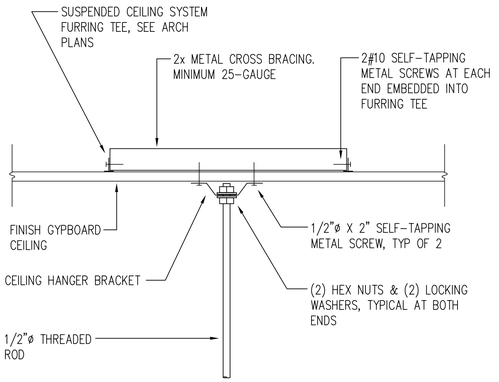

E16_CB06

4 CEILING HANGER SUPPORT — NO SCALE

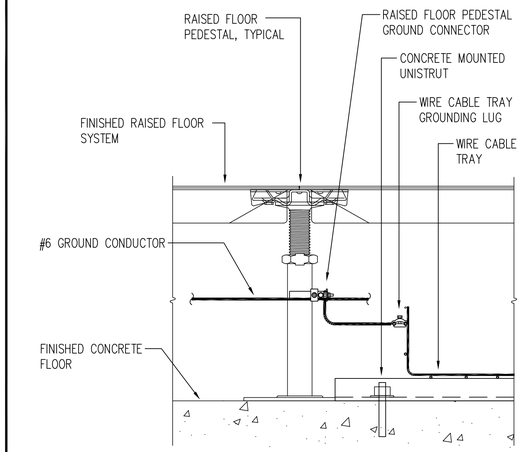

E16_FG01

5 PEDESTAL/CABLE TRAY GROUND — 3"=1'-0"

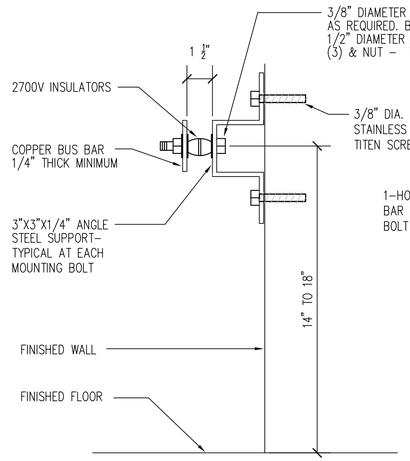

SIDE VIEW

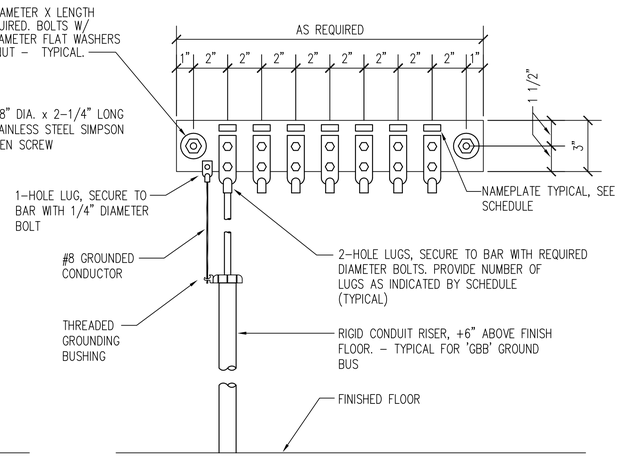

FRONT VIEW

GROUNDING BUS BAR SCHEDULE "TMGB"				
	PROVIDE PLASTIC LAMINATED NAMEPLATES WITH 1/4" WHITE LETTERS ON BLACK BACKGROUND. SECURE TO BUS BAR WITH SHEET METAL SCREWS			
⟨-⟩	DESIGNATION	GROUND CONDUCTOR SIZE	⟨-⟩	DESIGNATION	GROUND CONDUCTOR SIZE
①	MAIN SWITCHBOARD 'SB-D'	#2	⑧	TTB	#6
②	STRUCTURAL STEEL	#6	⑨	SPARE	-
③	COLD WATER PIPING	#6	⑩	SPARE	-
④	DATA RACKS	#6	⑪	SPARE	-
⑤	CABLE TRAY	#6	⑫	SPARE	
⑥	RAISED FLOOR SYSTEM	#6	⑬	SPARE	
⑦	PANEL 'C'	#2	⑭	SPARE	

GROUND BUS BAR NOTES

1. PROVIDE PLASTIC LAMINATED NAMEPLATES WITH 1/4" WHITE LETTERS ON BLACK BACKGROUND. SECURE TO BUS BAR WITH SHEET METAL SCREWS
2. BASIC BUS BAR REQUIREMENTS ONLY ARE SHOWN. QUANTITY OF CONNECTIONS TO THE BUS BAR SHALL BE SPECIFIC TO EACH BUILDING. PROVIDE A GROUND CONNECTION TO THE BUS BAR FROM EACH PIECE OF EQUIPMENT, CABINET, CABLE TRAY, DATA RACK, PANEL, BUILDING STEEL, COLD WATER PIPE, ETC.
3. PROVIDE QUANTITY OF BUS BARS REQUIRED TO ACCOMMODATE ALL CONNECTION POINTS LISTED ABOVE.
4. SIZE OF BUS BAR SHOWN FOR REFERENCE ONLY, CONTRACTOR MAY USE LARGER BUS BAR TO ACCOMMODATE ALL REQUIRED CONNECTION POINTS ON A SINGLE BAR.

ACCEPTABLE MANUFACTURERS:
SAUNDERS BROTHERS SB-476, CHATSWORTHS PRODUCTS INC. 10622-020, HARGER, OR EQUAL.

E16_GD01

6 TELECOMMUNICATIONS MAIN GROUNDING BUS BAR 'TMGB' — NO SCALE

IDENTIFICATION STAMP
DIV. OF THE STATE ARCHITECT
APP: 03-121324 INC:
REVIEWED FOR
SS ☐ FLS ☐ ACS ☑
DATE: 09/14/2022

OFFICE OF THE STATE FIRE MARSHAL
APPROVED FIRE AND PANIC ONLY
09/07/22
21-0233
Approval of this plan does not authorize or approve any omission or deviation from applicable regulations. Final approval is subject to field inspection. One set of approved plans shall be available on the project site at all times.

DGS GENERAL SERVICES

Department of General Services
Architecture & Engineering Sections
State of California
Real Estate Services Division
Project Management & Development Branch
707 Third Street, Suite 4-105
West Sacramento, California 95605

REGISTERED PROFESSIONAL ENGINEER JOSEPH H ABDELSAYD No. E-18915 ELECTRICAL STATE OF CALIFORNIA

DMV
State of California
Department of Motor Vehicles

Issue

No.	Date	Description
1	9/2/22	

Project
SANTA MARIA FIELD OFFICE REPLACEMENT
2770 SANTA MARIA WAY
SANTA MARIA, CA 93455
SANTA BARBARA COUNTY

DEPT OF MOTOR VEHICLES

Supervisor	Designed	Drawn
J.ABDELSAYD	M.PRINCE	M.PRINCE

DSA App No. 03-121324
SFM Permit No. 21-S-0233-CP-ER

Sheet Title
DETAILS - TELECOMM

Project Number
DGS000000140725

Reference North
Sheet Scale AS NOTED
Sheet Number E542

Copyright © 2022, California Department of General Services - Real Estate Services Division

CAD File: X:\Projects\14xxxx\140725\DWG\PLTE542.dwg Plot Date: Jul 11, 2022 - 5:19pm Plotted by: jkelly

RELATIVE BORDER SCALE IN INCHES 0 1 2 3

System No. C-AJ-4035

F Rating - 3 Hr.
T Rating = 0 Hr.

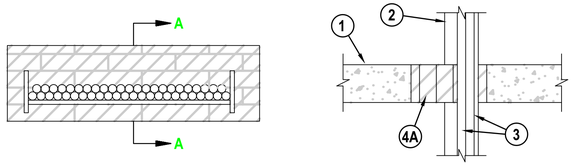

SECTION A-A

1. FLOOR OR WALL ASSEMBLY MIN 4–1/2 IN. THICK REINFORCED LIGHTWEIGHT OR NORMAL WEIGHT (100–150 PCF) CONCRETE. WALL MAY ALSO BE CONSTRUCTED OF ANY UL CLASSIFIED CONCRETE BLOCKS*. MAX AREA OF OPENING IS 270 SQ IN WITH MAX DIMENSION OF 30 IN.

   SEE CONCRETE BLOCKS (CAZT) CATEGORY IN THE FIRE RESISTANCE DIRECTORY FOR NAMES OF MANUFACTURERS.

2. CABLE TRAY* MAX 24 IN. WIDE BY MAX 4 IN. DEEP OPEN–LADDER OR SOLID–BACK CABLE TRAY WITH CHANNEL–SHAPED SIDE RAILS FORMED OF 0.10 IN. THICK ALUMINUM OR 0.060 IN. THICK GALV STEEL AND WITH 1–1/2 IN. WIDE BY 1 IN. CHANNEL SHAPE RUNGS SPACED 9 IN. OC OR A 0.029 IN. THICK STEEL SOLID BACK, RESPECTIVELY. THE ANNULAR SPACE BETWEEN THE CABLE TRAY AND THE PERIPHERY OF THE OPENING SHALL BE MIN 1 IN. TO MAX 4 IN. CABLE TRAY TO BE RIGIDLY SUPPORTED ON BOTH SIDES OF FLOOR OR WALL ASSEMBLY.

3. CABLES AGGREGATE CROSS–SECTIONAL AREA OF CABLES IN CABLE TRAY TO BE MAX 40 PERCENT OF THE CROSS–SECTIONAL AREA OF THE CABLE TRAY. ANY COMBINATION OF THE FOLLOWING TYPES AND SIZES OF COPPER CONDUCTOR OR FIBER OPTIC CABLES MAY BE USED:

   A. 1/C, 500 KCMIL WITH THERMOPLASTIC INSULATION AND PVC JACKET.
   B. 300 PAIR –– NO. 24 AWG CABLE WITH PVC INSULATION AND JACKET.
   C. 24 FIBEROPTIC CABLE WITH PVC SUBUNIT AND JACKET.
   D. THREE 1/C NO. 12 AWG WIRE, INSULATED WITH POLYVINYL CHLORIDE, IN A NOMINAL 3/4 IN. FLEXIBLE METAL CONDUIT.

4. FIRESTOP SYSTEM THE FIRESTOP SYSTEM SHALL CONSIST OF THE FOLLOWING:

   A. FILL, VOID OR CAVITY MATERIAL* FIRE BLOCKS INSTALLED WITH THE LONG DIMENSION PLACED HORIZONTALLY WITHIN THE OPENING, FLUSH WITH BOTTOM OF FLOOR ASSEMBLIES. BLOCKS TO COMPLETELY FILL THE ENTIRE WIDTH OF OPENING OF WALL ASSEMBLIES.
      HILTI CONSTRUCTION CHEMICALS, DIV OF HILTI INC –– FS–FIRE BLOCK

   B. FILL, VOID OR CAVITY MATERIAL* –SEALANT ON PUTTY– NOT SHOWN FILL MATERIAL TO BE FORCED INTO INTERSTICES OF CABLES AND BETWEEN CABLES AND CABLE TRAYS TO MAX EXTENT POSSIBLE ON BOTH SURFACES OF THE PENETRATION. HILTI CONSTRUCTION CHEMICALS, DIV OF HILTI INC –– FS–ONE SEALANT OR CP618 FIRESTOP PUTTY STICK
      (NOTE: L RATING ONLY WHEN FS–ONE SEALANT IS USED)

*BEARING THE UL CLASSIFICATION MARK

2 CABLE TRAY THROUGH CONCRETE ASSEMBLY — NO SCALE

SYSTEM NO. F-C-1060

F RATING-- 1 HR
T RATING-- 1-1/4 HR

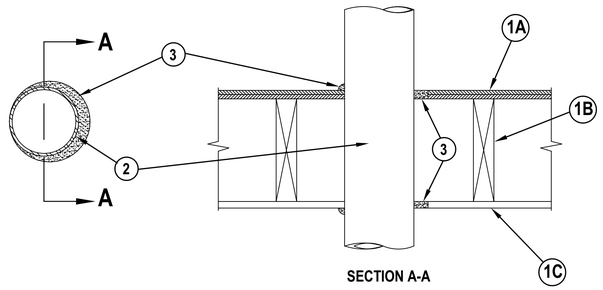

SECTION A-A

1. FLOOR–CEILING ASSEMBLY – THE 1 HR FIRE–RATED SOLID OR TRUSSED LUMBER JOIST FLOOR–CEILING ASSEMBLY SHALL BE CONSTRUCTED OF THE MATERIALS AND IN THE MANNER SPECIFIED IN THE INDIVIDUAL L500 SERIES FLOOR–CEILING DESIGNS IN THE UL FIRE RESISTANCE DIRECTORY. THE GENERAL CONSTRUCTION DETAILS OF THE FLOOR–CEILING ASSEMBLY ARE SUMMARIZED BELOW:

   A. FLOORING SYSTEM – LUMBER OR PLYWOOD SUBFLOOR WITH FINISH FLOOR OF LUMBER, PLYWOOD OR FLOOR TOPPING MIXTURE* AS SPECIFIED IN THE INDIVIDUAL FLOOR–CEILING DESIGN. MAX DIAM OF OPENING IS 5 IN.

   B. WOOD JOISTS – NOM 10 IN. DEEP (OR DEEPER) LUMBER, STEEL OR COMBINATION LUMBER AND STEEL JOISTS, TRUSSES OR STRUCTURALWOOD MEMBERS* WITH BRIDGING AS REQUIRED AND WITH ENDS FIRESTOPPED.

   C. GYPSUM BOARD* – NOM 4 FT WIDE BY 5/8 IN. THICK AS SPECIFIED IN THE INDIVIDUAL FLOOR–CEILING DESIGN. MAX DIAM OF OPENING IS 5 IN.

1.1 CHASEWALL (OPTIONAL, NOT SHOWN) – THE THROUGH PENETRANTS (ITEM NO. 2) MAY BE ROUTED THROUGH A FIRE–RATED SINGLE, DOUBLE OR STAGGERED WOOD STUD/GYPSUM WALL BOARD CHASE WALL HAVING A FIRE RATING CONSISTENT WITH THAT OF THE FLOOR–CEILING ASSEMBLY. THE CHASE WALL SHALL BE CONSTRUCTED OF THE MATERIALS AND IN THE MANNER SPECIFIED IN THE INDIVIDUAL U300 SERIES WALL AND PARTITION DESIGNS IN THE UL FIRE RESISTANCE DIRECTORY AND SHALL INCLUDE THE FOLLOWING CONSTRUCTION FEATURES:

   A. STUDS – NOM 2 BY 6 IN. OR DOUBLE NOM 2 BY 4 IN. LUMBER STUDS.

   B. SOLE PLATE – NOM 2 BY 6 IN. OR PARALLEL 2 BY 4 IN. LUMBER PLATES, TIGHTLY BUTTED. MAX DIAM OF OPENING IS 5 IN.

   C. TOP PLATE – THE DOUBLE TOP PLATE SHALL CONSIST OF TWO NOM 2 BY 6 IN. OR TWO SETS OF PARALLEL 2 BY 4 IN. LUMBER PLATES, TIGHTLY BUTTED. MAX DIAM OF OPENING IS 5 IN.

   D. GYPSUM BOARD* – THICKNESS, TYPE, NUMBER OF LAYERS AND FASTENERS SHALL BE AS SPECIFIED IN INDIVIDUAL WALL AND PARTITION DESIGN.

2. THROUGH PENETRANTS – ONE METALLIC PIPE, CONDUIT OR TUBING TO BE INSTALLED EITHER CONCENTRICALLY OR ECCENTRICALLY WITHIN THE OPENING, APPROX MIDWAY BETWEEN JOISTS OR TRUSSES. THE ANNULAR SPACE BETWEEN PENETRANT AND PERIPHERY OF OPENING SHALL BE MIN 0 IN. TO MAX 7/8 IN. PENETRANTS TO BE RIGIDLY SUPPORTED ON BOTH SIDES OF FLOOR OR WALL ASSEMBLY. THE FOLLOWING TYPES AND SIZES OF METALLIC PIPES, CONDUITS OR TUBINGS MAY BE USED:

   A. STEEL – NOM 4 IN. DIAM (OR SMALLER) SCHEDULE 10 (OR HEAVIER) STEEL PIPE.

   B. IRON PIPE – NOM 4 IN. DIAM (OR SMALLER) CAST OR DUCTILE IRON PIPE.

   C. CONDUIT – NOM 4 IN. DIAM (OR SMALLER) STEEL CONDUIT, OR NOM 4 IN. (OR SMALLER) STEEL ELECTRICAL METALLIC TUBING.

   D. COPPER – TUBING NOM 4 IN. DIAM (OR SMALLER) TYPE M (OR HEAVIER) COPPER TUBE.

   E. COPPER PIPE.NOM 4 IN. DIAM (OR SMALLER) REGULAR (OR HEAVIER) COPPER PIPE.

3. FILL VOID OR CAVITY MATERIALS* – CAULK – MIN 3/4 IN. THICKNESS OF CAULK APPLIED WITHIN THE ANNULUS, FLUSH WITH TOP SURFACE OF FLOOR OR SOLE PLATE. MIN 5/8 IN. THICKNESS OF CAULK APPLIED WITHIN THE ANNULUS, FLUSH WITH BOTTOM SURFACE OF CEILING OR TOP PLATE. MIN 1/2 IN. DIAM BEAD OF CAULK APPLIED TO THE PENETRANT/FLOOR OR SOLE PLATE INTERFACE AT POINT CONTACT LOCATION ON THE TOP SURFACE OF FLOOR OR SOLE PLATE AND AT THE PENETRANT/CEILING OR TOP PLATE INTERFACE AT POINT CONTACT LOCATION ON LOWER SURFACE OF ASSEMBLY.

MINNESOTA MINING & MFG CO – FD–150+

1 FIRE RATED PENETRATION THRU HORIZONTAL ASSEMBLY — NO SCALE

IDENTIFICATION STAMP
DIV. OF THE STATE ARCHITECT
APP: 03-121324 INC:
REVIEWED FOR
SS ☐ FLS ☐ ACS ☑
DATE: 09/14/2022

OFFICE OF THE STATE FIRE MARSHAL
APPROVED FIRE AND PANIC ONLY
09/07/22
21-0233
Approval of this plan does not authorize or approve any omission or deviation from applicable regulations. Final approval is subject to field inspection. One set of approved plans shall be available on the project site at all times.

DGS GENERAL SERVICES
Department of General Services
Architecture & Engineering Sections
State of California
Real Estate Services Division
Project Management & Development Branch
707 Third Street, Suite 4-105
West Sacramento, California 95605

REGISTERED PROFESSIONAL ENGINEER
JOSEPH H ABDELSAYD
No. E-18915
ELECTRICAL
STATE OF CALIFORNIA

DMV
State of California
Department of Motor Vehicles

Issue		
No.	Date	Description
1	9/2/22	

Project
SANTA MARIA FIELD OFFICE REPLACEMENT

2770 SANTA MARIA WAY
SANTA MARIA, CA 93455
SANTA BARBARA COUNTY

DEPT OF MOTOR VEHICLES

Supervisor	Designed	Drawn
J.ABDELSAYD	M.PRINCE	M.PRINCE

DSA App No.	SFM Permit No.
03-121324	21-S-0233-CP-ER

Sheet Title
DETAILS - TELECOMM

Project Number
DGS000000140725

Reference North

Sheet Scale
AS NOTED

Sheet Number
E543

Copyright © 2022, California Department of General Services - Real Estate Services Division

CAD File: X:\Projects\14xxxx\140725\DWG\PLTIE543.dwg Plot Date: Sep 02, 2022 - 2:47pm Plotted by: jkelly

RELATIVE BORDER SCALE IN INCHES 0 1 2 3

CABLE LEGEND		ROUTING
TYPE	DESCRIPTION	TYPE
A	MULTI-CONDUCTOR ACCESS CONTROL CABLE, (2-#22, 4-#18, 4-#22)	EMT
D	22AWG-8C SHIELDED	DOOR CHASE
F	18AWG-4C SHIELDED	EMT
R	22AWG-2C SHIELDED	EMT
T	22AWG-4C SHIELDED	EMT

NOTE: ALL CABLES ARE SHIELDED AND PLENUM RATED

7 ACCESS CONTROL CABLE SCHEDULE — NO SCALE

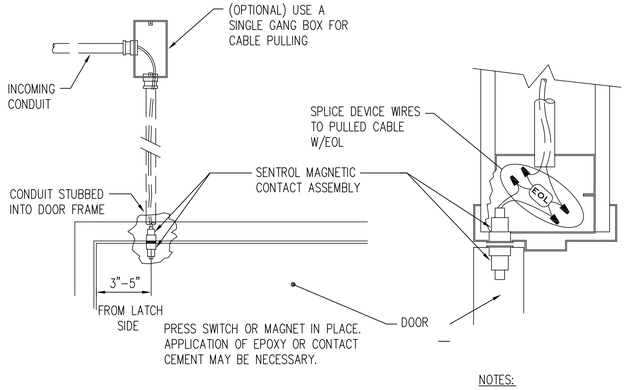

NOTES:
1. LEAVE 48" CABLE SLACK AT EACH DEVICE
2. BACK BOX NOT REQUIRED

6 TYPICAL DOOR CONTACT — NO SCALE

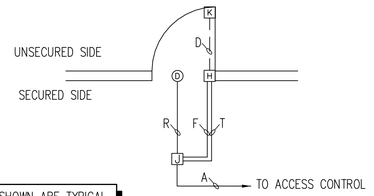

DEVICES SHOWN ARE TYPICAL, FOR EXACT DEVICES AT EACH LOCATION SEE PLAN SHEETS

PLAN VIEW

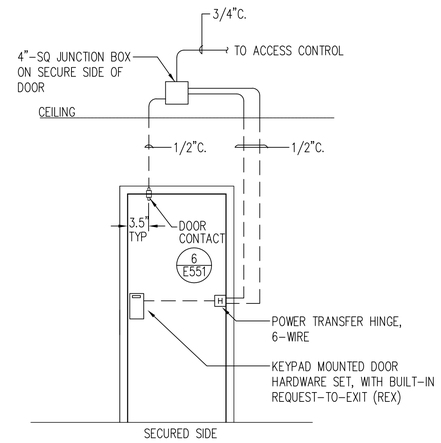

KEYPAD LOCKSET

***NOTE: ALL ACCESS CONTROLLED DOORS SHALL BE PROVIDED WITH FAIL-SECURE CONNECTION, COORDINATE DOOR TYPE WITH ARCHITECTURAL PLANS.

5 SINGLE DOOR ACCESS CONTROLS — NO SCALE

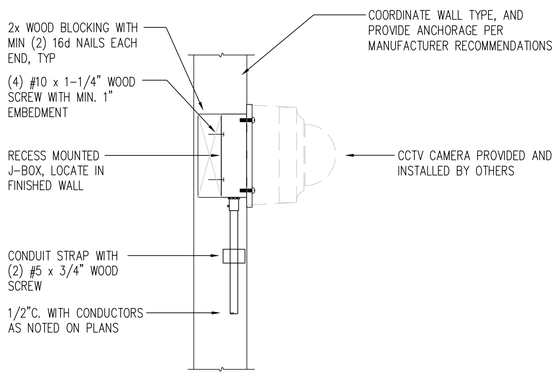

4 CCTV CAMERA SURFACE MOUNT — NO SCALE

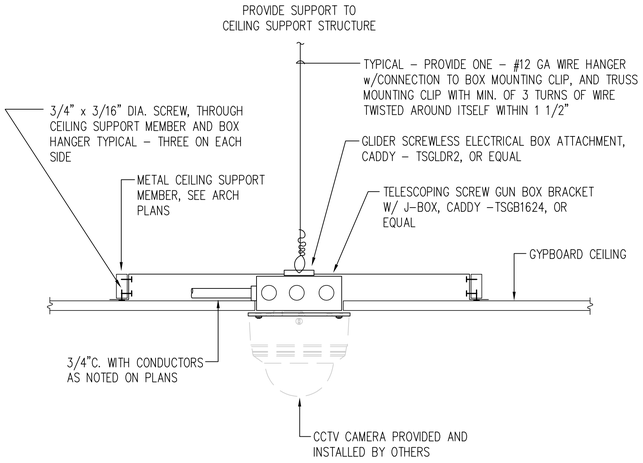

3 CCTV CAMERA GYPBOARD CEILING MOUNTING — NO SCALE

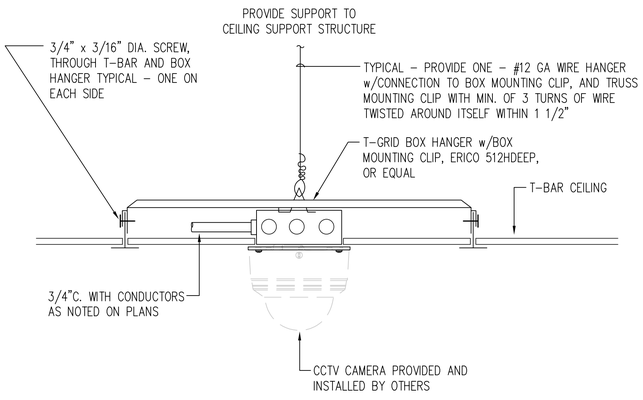

2 CCTV CAMERA CEILING SURFACE MOUNTING — NO SCALE

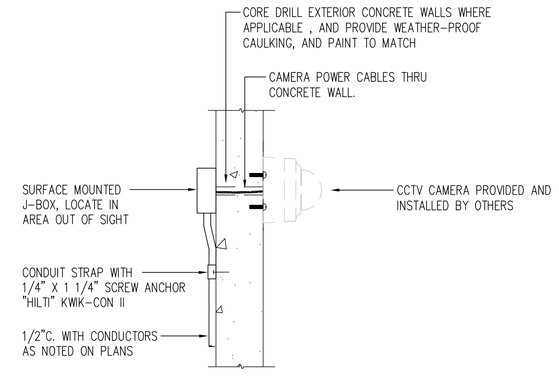

1 CCTV CAMERA SURFACE MOUNTING — NO SCALE

IDENTIFICATION STAMP
DIV. OF THE STATE ARCHITECT
APP: 03-121324 INC:
REVIEWED FOR
SS ☐ FLS ☐ ACS ☑
DATE: 09/14/2022

OFFICE OF THE STATE FIRE MARSHAL
APPROVED FIRE AND PANIC ONLY
09/07/22
21-0233
Approval of this plan does not authorize or approve any omission or deviation from applicable regulations. Final approval is subject to field inspection. One set of approved plans shall be available on the project site at all times.

DGS GENERAL SERVICES
Department of General Services
Architecture & Engineering Sections
State of California
Real Estate Services Division
Project Management & Development Branch
707 Third Street, Suite 4-105
West Sacramento, California 95605

REGISTERED PROFESSIONAL ENGINEER
JOSEPH H ABDELSAYED
No. E-18915
ELECTRICAL
STATE OF CALIFORNIA

DMV
State of California
Department of Motor Vehicles

Issue		
No.	Date	Description
1	9/2/22	

Project
SANTA MARIA FIELD OFFICE REPLACEMENT
2770 SANTA MARIA WAY
SANTA MARIA, CA 93455
SANTA BARBARA COUNTY

DEPT OF MOTOR VEHICLES

Supervisor	Designed	Drawn
J.ABDELSAYD	M. PRINCE	M. PRINCE

DSA App No. 03-121324
SFM Permit No. 21-S-0233-CP-ER

Sheet Title
DETAILS - SECURITY AND ACCESS CONTROL

Project Number
DGS000000140725

Reference North
Sheet Scale AS NOTED
Sheet Number E551

Copyright © 2022, California Department of General Services - Real Estate Services Division

CAD File: X:\Projects\14xxxx\140725\DWG\PLTE551.dwg Plot Date: Jul 11, 2022 - 5:19pm Plotted by: jkelly

RELATIVE BORDER SCALE IN INCHES 0 1 2 3

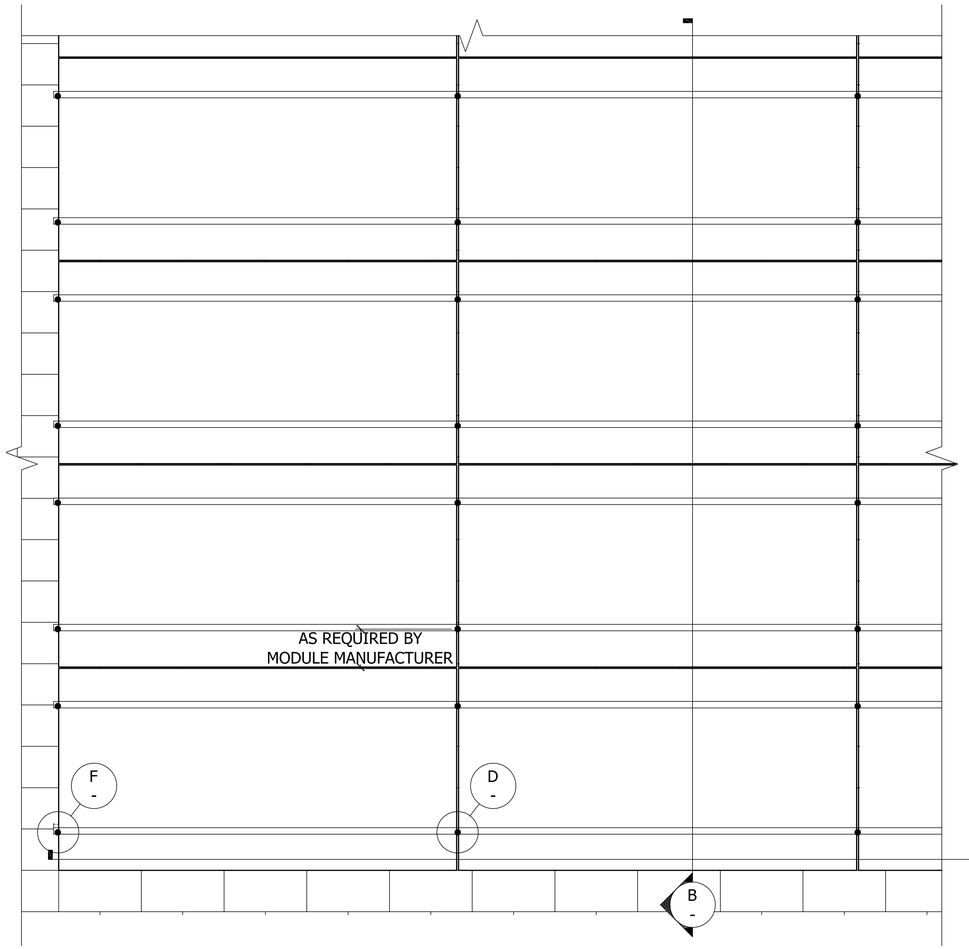

A PLAN VIEW, FLASHFOOT MOUNT, LANSDSCAPE MODULE
Scale: 1"=1'-0"

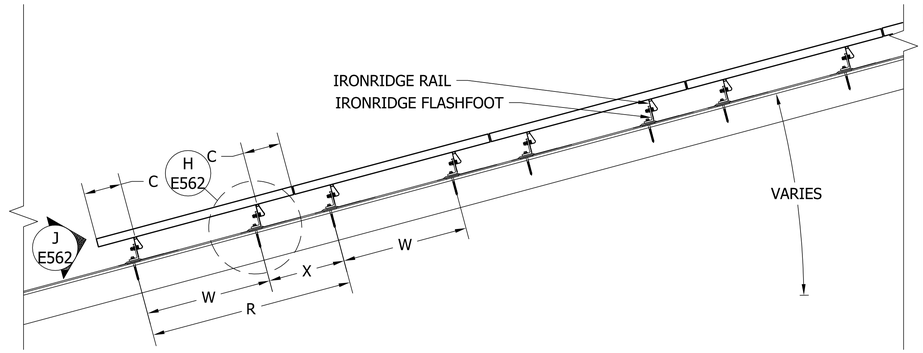

B SIDE VIEW, FLASHFOOT MOUNT, LANDSCAPE MODULE
Scale: 1"=1'-0"

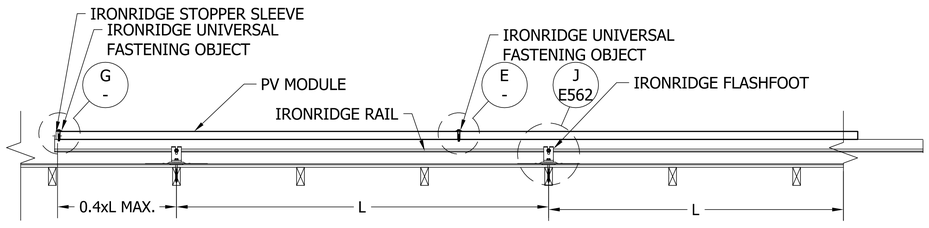

C FRONT VIEW, FLASHFOOT MOUNT, LANDSCAPE MODULE
Scale: 1"=1'-0"

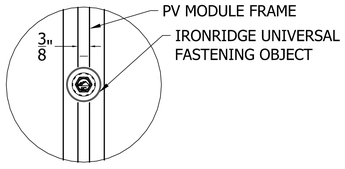

D DETAIL, MID CLAMP PLAN
Scale: 6"=1'-0"

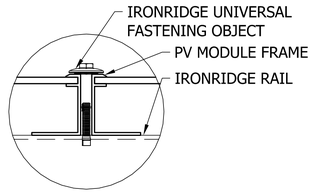

E DETAIL, MID CLAMP FRONT
Scale: 6"=1'-0"

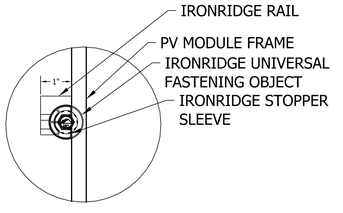

F DETAIL, END CLAMP (UFO) PLAN
Scale: 6"=1'-0"

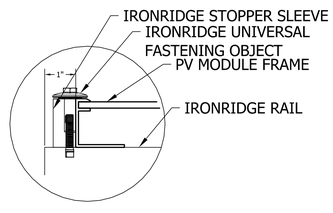

G DETAIL, END CLAMP (UFO) FRONT
Scale: 6"=1'-0"

IDENTIFICATION STAMP
DIV. OF THE STATE ARCHITECT
APP: 03-121324 INC:
REVIEWED FOR
SS ☐ FLS ☐ ACS ☑
DATE: 09/14/2022

OFFICE OF THE STATE FIRE MARSHAL
APPROVED FIRE AND PANIC ONLY
09/07/22
21-0233
Approval of this plan does not authorize or approve any omission or deviation from applicable regulations. Final approval is subject to field inspection. One set of approved plans shall be available on the project site at all times.

DGS GENERAL SERVICES
Department of General Services
Architecture & Engineering Sections
State of California
Real Estate Services Division
Project Management & Development Branch
707 Third Street, Suite 4-105
West Sacramento, California 95605

REGISTERED PROFESSIONAL ENGINEER
TOMMY F. LEE
No. E-18534
ELECTRICAL
STATE OF CALIFORNIA

DMV
State of California
Department of Motor Vehicles

Issue		
No.	Date	Description
1	9/2/22	

Project
SANTA MARIA FIELD OFFICE REPLACEMENT

2770 SANTA MARIA WAY
SANTA MARIA, CA 93455
SANTA BARBARA COUNTY

DEPT OF MOTOR VEHICLES

Supervisor	Designed	Drawn
J.ABDELSAYD	T. LEE	T. LEE

DSA App No.	SFM Permit No.
03-121324	21-S-0233-CP-ER

Sheet Title
DETAILS - SLOPED ROOF PV SYSTEM

Project Number
DGS000000140725

Reference North

Sheet Scale
AS SHOWN

Sheet Number
E561

Copyright © 2022, California Department of General Services - Real Estate Services Division

CAD File: X:\Projects\14xxxx\140725\DWG\PLTE561 DETAILS - SLOPED ROOF PV SYSTEM 1.dwg Plot Date: Jul 11, 2022 - 5:19pm Plotted by: jkelly

RELATIVE BORDER SCALE IN INCHES 0 1 2 3

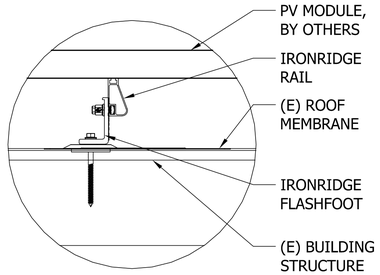

H FLASHFOOT DETAIL
Scale: 3"=1'-0"

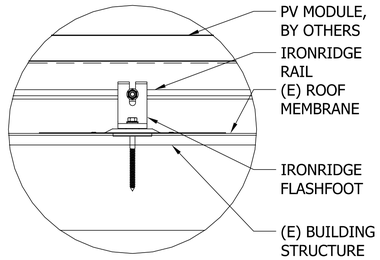

J FLASHFOOT DETAIL
Scale: 3"=1'-0"

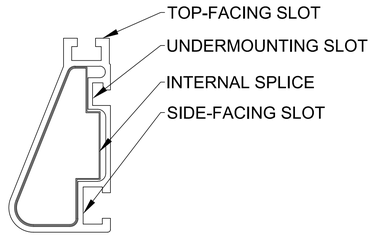

M DETAIL, SPLICE, XR1000
1'-0"=1'-0"

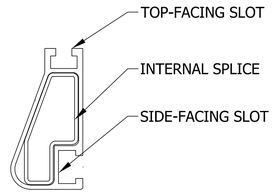

N DETAIL, SPLICE, XR100
1'-0"=1'-0"

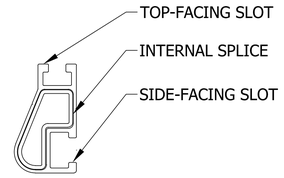

O DETAIL, SPLICE, XR10
1'-0"=1'-0"

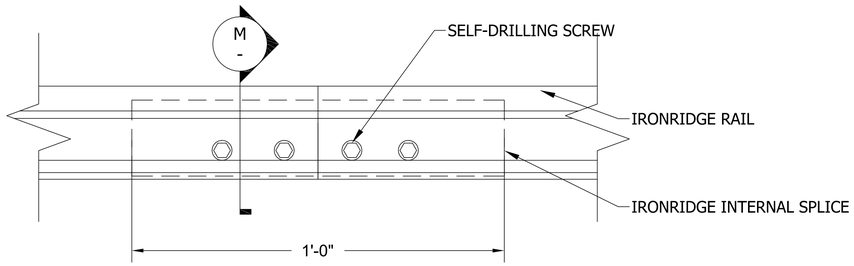

K DETAIL, SPLICE CONNECTION, XR1000
6"=1'-0"

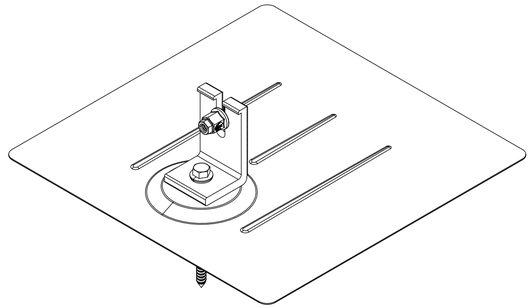

Q IRONRIDGE FLASHFOOT

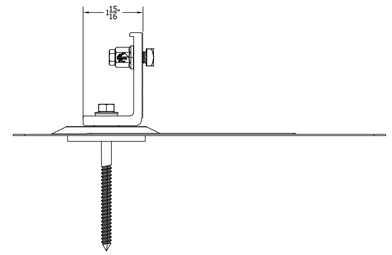

P IRONRIDGE FLASHFOOT SIDE VIEW

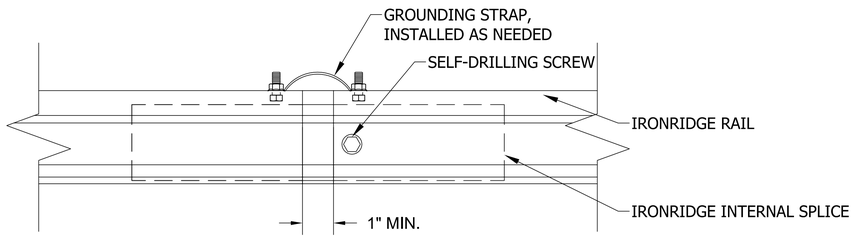

L DETAIL, EXPANSION JOINT CONNECTION, XR1000
6"=1'-0"

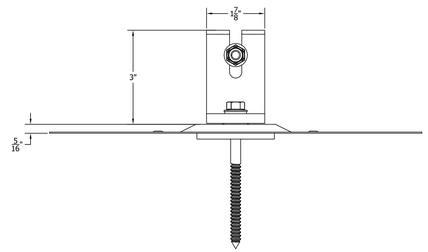

R IRONRIDGE FLASHFOOT, FRONT VIEW

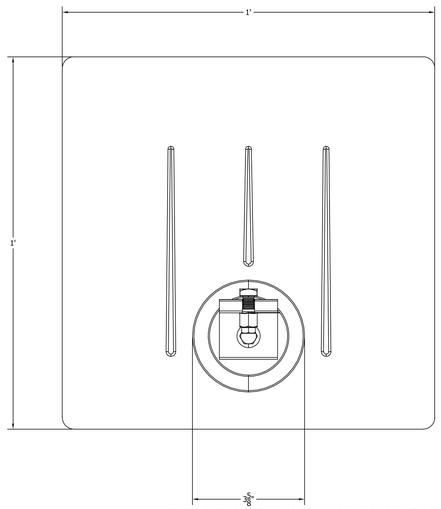

S IRONRIDGE FLASHFOOT, PLAN VIEW

IDENTIFICATION STAMP
DIV. OF THE STATE ARCHITECT
APP: 03-121324 INC:
REVIEWED FOR
SS ☐ FLS ☐ ACS ☑
DATE: 09/14/2022

OFFICE OF THE STATE FIRE MARSHAL
APPROVED FIRE AND PANIC ONLY
09/07/22
21-0233
Approval of this plan does not authorize or approve any omission or deviation from applicable regulations. Final approval is subject to field inspection. One set of approved plans shall be available on the project site at all times.

DGS GENERAL SERVICES

Department of General Services
Architecture & Engineering Sections
State of California
Real Estate Services Division
Project Management & Development Branch
707 Third Street, Suite 4-105
West Sacramento, California 95605

REGISTERED PROFESSIONAL ENGINEER TOMMY F. LEE No. E-18534 ELECTRICAL STATE OF CALIFORNIA

DMV
State of California
Department of Motor Vehicles

Issue

No.	Date	Description
1	9/2/22	

Project
SANTA MARIA FIELD OFFICE REPLACEMENT

2770 SANTA MARIA WAY
SANTA MARIA, CA 93455
SANTA BARBARA COUNTY

DEPT OF MOTOR VEHICLES

Supervisor	Designed	Drawn
J ABDELSAYED	T LEE	T LEE

DSA App No.	SFM Permit No.
03-121324	21-S-0233-CP-ER

Sheet Title
DETAILS - SLOPED ROOF PV SYSTEM

Project Number
DGS000000140725

Reference North | Sheet Scale AS SHOWN

Sheet Number
E562

© Copyright © 2022, California Department of General Services - Real Estate Services Division

CAD File: X:\Projects\14xxxx\140725\DWG\PLTE562 DETAILS - SLOPED ROOF PV SYSTEM 2.dwg Plot Date: Jul 11, 2022 - 5:19pm Plotted by: jkelly

RELATIVE BORDER SCALE IN INCHES 0 1 2 3

KEYED NOTES

1. MAIN BONDING JUMPER.
2. #3/0 CU CONCRETE ENCASED ("UFER") GROUND ELECTRODE AND #3/0 CU BONDS IN 3/4" CONDUIT TO COLD WATER PIPE & INTERIOR GAS PIPE.
3. SURGE PROTECTOR PER SPECIFICATION SECTION 264313.
4. TOTALIZING METER PROVISIONS PER PG&E REQUIREMENTS.
5. (4)#12 & (1)#12 GND.
6. 8-CIRCUIT METERING SYSTEM IN NEMA 1 ENCLOSURE, SEE 4/E521.
7. METERING SYSTEM CURRENT TRANSFORMER, SEE 4/E521.

FEEDER SCHEDULE

ID	FROM	TO	CONDUIT	CONDUCTORS PER CONDUIT
1A	PG&E PRIMARY SERVICE POINT	PG&E TRANSFORMER	(1) 4"	CONDUCTORS BY PG&E
1B	PG&E TRANSFORMER	MSB	(3) 5" ((1) SPARE)	CONDUCTORS BY PG&E
2	MSB	PANEL L	(1) 2"	(4) #1 & (1) #8 GND.
3	MSB	PANEL EV	(2) 2-1/2"	(4) #3/0 & (1) #3 GND.
4	MSB	PANEL M	(2) 2-1/2"	(4) #3/0 & (1) #3 GND.
5	MSB	PANEL P	(1) 2-1/2"	(4) #4/0 & (1) #4 GND.
6	MSB	PANEL C	(1) 2"	(4) #1, (1) #8 GND. & (1) #8 ISO. GND.
7	PV	MSB	(1) 4"	(4) 600 KCMIL & (1) #3 GND.

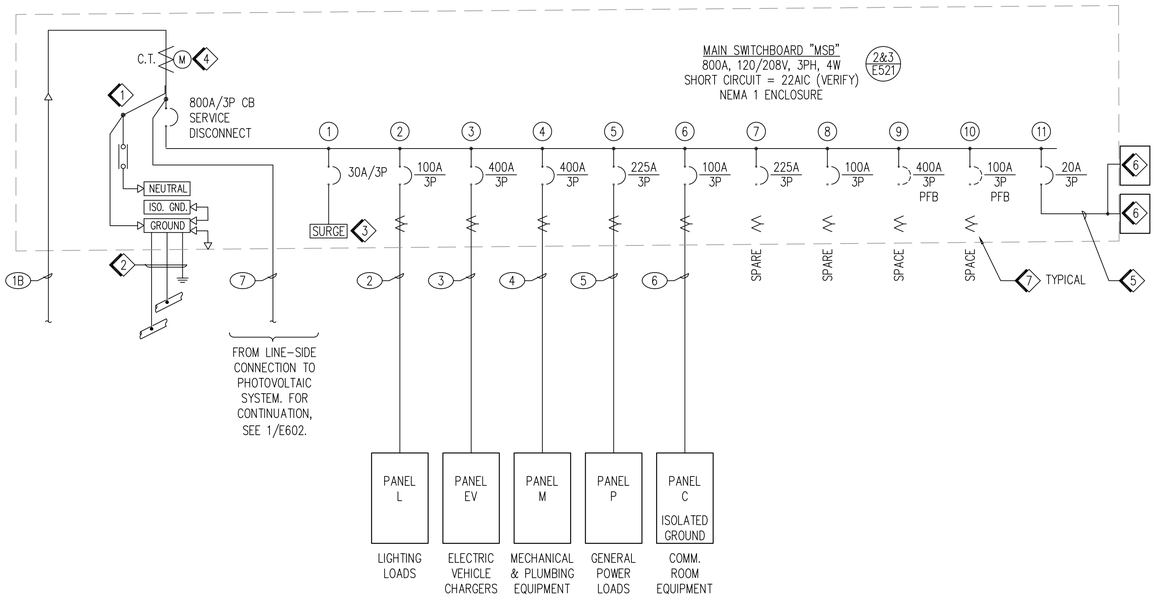

IDENTIFICATION STAMP
DIV. OF THE STATE ARCHITECT
APP: 03-121324 INC:
REVIEWED FOR
SS ☐ FLS ☐ ACS ☑
DATE: 09/14/2022

OFFICE OF THE STATE FIRE MARSHAL
APPROVED FIRE AND PANIC ONLY
09/07/22
21-0233
Approval of this plan does not authorize or approve any omission or deviation from applicable regulations. Final approval is subject to field inspection. One set of approved plans shall be available on the project site at all times.

GENERAL SERVICES
Department of General Services
Architecture & Engineering Sections
State of California
Real Estate Services Division
Project Management & Development Branch
707 Third Street, Suite 4-105
West Sacramento, California 95605

REGISTERED PROFESSIONAL ENGINEER
JOSEPH H ABDELSAYD
No. E-18915
ELECTRICAL
STATE OF CALIFORNIA

DMV
State of California
Department of Motor Vehicles

Issue		
No.	Date	Description
1	9/2/22	

Project
SANTA MARIA FIELD OFFICE REPLACEMENT
2770 SANTA MARIA WAY
SANTA MARIA, CA 93455
SANTA BARBARA COUNTY
DEPT OF MOTOR VEHICLES

Supervisor	Designed	Drawn
J.ABDELSAYD	J. KELLY	J. KELLY

DSA App No. 03-121324
SFM Permit No. 21-S-0233-CP-ER
Sheet Title: SINGLE LINE DIAGRAM - MAIN
Project Number: DGS000000140725
Reference North
Sheet Scale: NONE
Sheet Number: E601

1 SINGLE LINE DIAGRAM - MAIN — NO SCALE

CAD File: X:\Projects\144xxxx\140725\DWG\PLTE601.dwg Plot Date: Jul 11, 2022 - 5:20pm Plotted by: jkelly
Copyright © 2022, California Department of General Services - Real Estate Services Division

RELATIVE BORDER SCALE IN INCHES 0 1 2 3

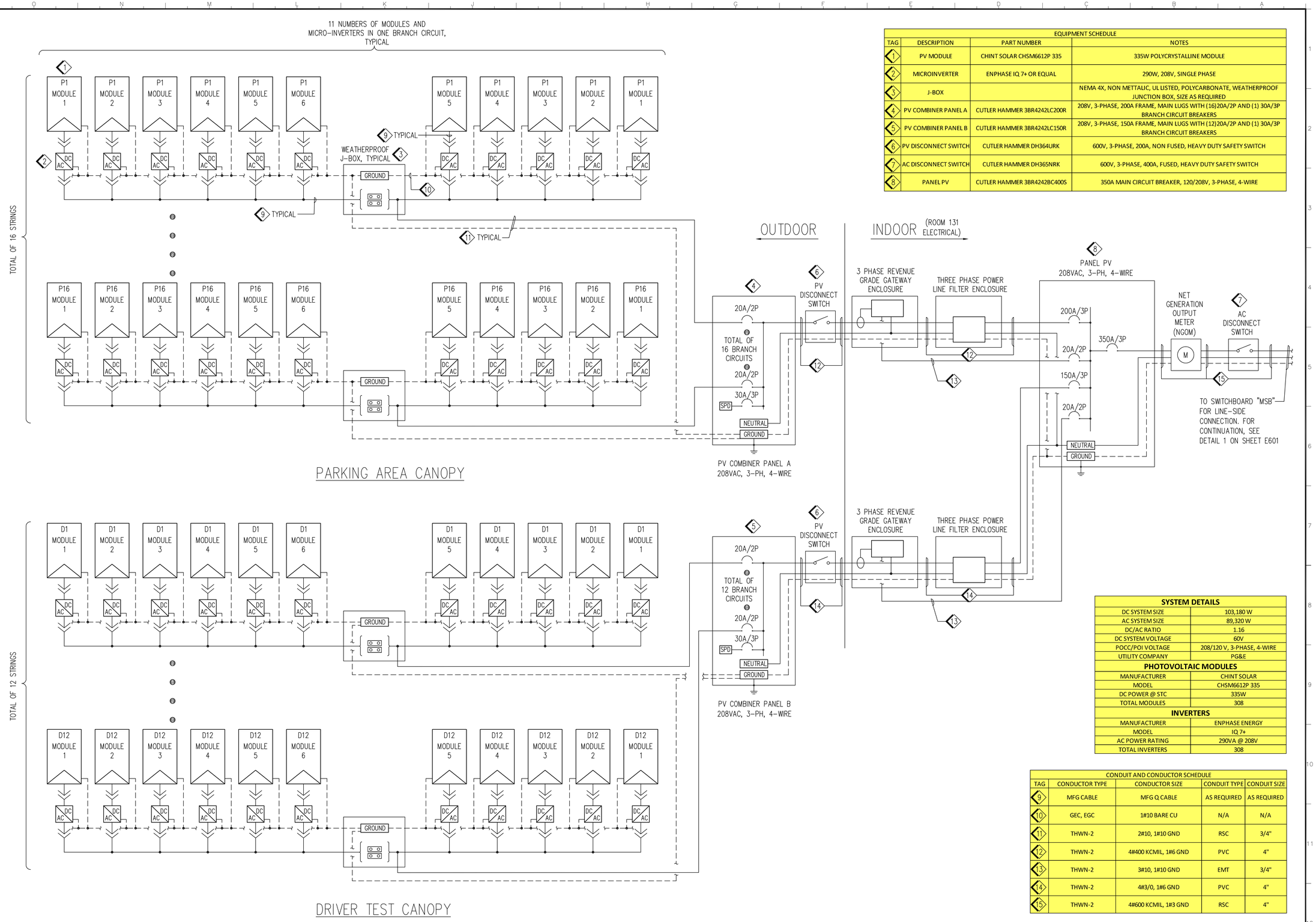

EQUIPMENT SCHEDULE			
TAG	DESCRIPTION	PART NUMBER	NOTES
1	PV MODULE	CHINT SOLAR CHSM6612P 335	335W POLYCRYSTALLINE MODULE
2	MICROINVERTER	ENPHASE IQ 7+ OR EQUAL	290W, 208V, SINGLE PHASE
3	J-BOX		NEMA 4X, NON METTALIC, UL LISTED, POLYCARBONATE, WEATHERPROOF JUNCTION BOX, SIZE AS REQUIRED
4	PV COMBINER PANEL A	CUTLER HAMMER 3BR4242LC200R	208V, 3-PHASE, 200A FRAME, MAIN LUGS WITH (16)20A/2P AND (1) 30A/3P BRANCH CIRCUIT BREAKERS
5	PV COMBINER PANEL B	CUTLER HAMMER 3BR4242LC150R	208V, 3-PHASE, 150A FRAME, MAIN LUGS WITH (12)20A/2P AND (1) 30A/3P BRANCH CIRCUIT BREAKERS
6	PV DISCONNECT SWITCH	CUTLER HAMMER DH364URK	600V, 3-PHASE, 200A, NON FUSED, HEAVY DUTY SAFETY SWITCH
7	AC DISCONNECT SWITCH	CUTLER HAMMER DH365NRK	600V, 3-PHASE, 400A, FUSED, HEAVY DUTY SAFETY SWITCH
8	PANEL PV	CUTLER HAMMER 3BR4242BC400S	350A MAIN CIRCUIT BREAKER, 120/208V, 3-PHASE, 4-WIRE

SYSTEM DETAILS	
DC SYSTEM SIZE	103,180 W
AC SYSTEM SIZE	89,320 W
DC/AC RATIO	1.16
DC SYSTEM VOLTAGE	60V
POCC/POI VOLTAGE	208/120 V, 3-PHASE, 4-WIRE
UTILITY COMPANY	PG&E
PHOTOVOLTAIC MODULES	
MANUFACTURER	CHINT SOLAR
MODEL	CHSM6612P 335
DC POWER @ STC	335W
TOTAL MODULES	308
INVERTERS	
MANUFACTURER	ENPHASE ENERGY
MODEL	IQ 7+
AC POWER RATING	290VA @ 208V
TOTAL INVERTERS	308

CONDUIT AND CONDUCTOR SCHEDULE				
TAG	CONDUCTOR TYPE	CONDUCTOR SIZE	CONDUIT TYPE	CONDUIT SIZE
9	MFG CABLE	MFG Q CABLE	AS REQUIRED	AS REQUIRED
10	GEC, EGC	1#10 BARE CU	N/A	N/A
11	THWN-2	2#10, 1#10 GND	RSC	3/4"
12	THWN-2	4#400 KCMIL, 1#6 GND	PVC	4"
13	THWN-2	3#10, 1#10 GND	EMT	3/4"
14	THWN-2	4#3/0, 1#6 GND	PVC	4"
15	THWN-2	4#600 KCMIL, 1#3 GND	RSC	4"

1 SINGLE LINE DIAGRAM - PHOTOVOLTAICS

IDENTIFICATION STAMP
DIV. OF THE STATE ARCHITECT
APP: 03-121324 INC:
REVIEWED FOR
SS ☐ FLS ☐ ACS ☑
DATE: 09/14/2022

OFFICE OF THE STATE FIRE MARSHAL
APPROVED FIRE AND PANIC ONLY
09/07/22
21-0233
Approval of this plan does not authorize or approve any omission or deviation from applicable regulations. Final approval is subject to field inspection. One set of approved plans shall be available on the project site at all times.

DGS GENERAL SERVICES
Department of General Services
Architecture & Engineering Sections
State of California
Real Estate Services Division
Project Management & Development Branch
707 Third Street, Suite 4-105
West Sacramento, California 95605

REGISTERED PROFESSIONAL ENGINEER TOMMY F. LEE No. E-18534 ELECTRICAL STATE OF CALIFORNIA

DMV
State of California
Department of Motor Vehicles

Issue		
No.	Date	Description
1	9/2/22	

Project
SANTA MARIA FIELD OFFICE REPLACEMENT
2770 SANTA MARIA WAY
SANTA MARIA, CA 93455
SANTA BARBARA COUNTY
DEPT OF MOTOR VEHICLES

Supervisor	Designed	Drawn
J.ABDELSAYD	T.LEE	T.LEE

DSA App No. 03-121324
SFM Permit No. 21-S-0233-CP-ER

Sheet Title
SIGLE LINE DIAGRAM - PHOTOVOLTAICS

Project Number
DGS000000140725

Reference North
Sheet Scale AS NOTED
Sheet Number E602

Copyright © 2022, California Department of General Services - Real Estate Services Division

CAD File: X:\Projects\140xxx\140725\DWG\PLTE602.dwg Plot Date: Jul 11, 2022 - 5:20pm Plotted by: jkelly

RELATIVE BORDER SCALE IN INCHES 0 1 2 3

PANEL: PV COMBINER PANEL A — LOCATION: CANOPY COLUMN

CODE	DESCRIPTION	LOAD	BKR	CIR	A	B	C	CIR	BKR	LOAD	DESCRIPTION	CODE
G	STRING 1	1595	20/2	1	3190			2	20/2	1595	STRING 9	G
G		1595		3		3190		4		1595		G
G	STRING 2	1595	20/2	5			3190	6	20/2	1595	STRING 10	G
G		1595		7	3190			8		1595		G
G	STRING 3	1595	20/2	9		3190		10	20/2	1595	STRING 11	G
G		1595		11			3190	12		1595		G
G	STRING 4	1595	20/2	13	3190			14	20/2	1595	STRING 12	G
G		1595		15		3190		16		1595		G
G	STRING 5	1595	20/2	17			3190	18	20/2	1595	STRING 13	G
G		1595		19	3190			20		1595		G
G	STRING 6	1595	20/2	21		3190		22	20/2	1595	STRING 14	G
G		1595		23			3190	24		1595		G
G	STRING 7	1595	20/2	25	3190			26	20/2	1595	STRING 15	G
G		1595		27		3190		28		1595		G
G	STRING 8	1595	20/2	29			3190	30	20/2	1595	STRING 16	G
G		1595		31	3190			32		1595		G
	SPACE			33		0		34			SPACE	G
	SPACE			35			0	36			SPACE	G
	SPACE			37	2			38	2			G
	SPACE			39		2		40	30/3	2	SPD	G
	SPACE			41			2	42		2		G

19142 15952 15952

SIZE:	200A FRAME	GROUND:	STANDARD	NOTES:	
VOLTAGE:	208	MOUNTING:	SURFACE	PROVIDE APPLICABLE LABELING AT	
PHASE:	3	ENCLOSURE:	NEMA 3R	DISCONNECT IN ACCORDANCE WITH	
WIRE:	4	FED FROM:	PV MICROINVERTERS	CEC 690.53.	
MAIN:	LUGS	CONNECTED KVA:	51.0		
BREAKER AIC RATING:	22K (VERIFY)	CONNECTED AMPS:	141.8		
BUS:	COPPER	CEC KVA:	55.0		
NEUTRAL:	STANDARD	CEC AMPS:	152.8		

CODE DESCRIPTIONS: L = LIGHTING, R = RECEPTACLE, G = GENERAL EQUIPMENT, C = CONTINUOUS, H = HVAC, M = MOTOR

PANEL: PV COMBINER PANEL B — LOCATION: CANOPY COLUMN

CODE	DESCRIPTION	LOAD	BKR	CIR	A	B	C	CIR	BKR	LOAD	DESCRIPTION	CODE
G	STRING 1	1595	20/2	1	3190			2	20/2	1595	STRING 7	G
G		1595		3		3190		4		1595		G
G	STRING 2	1595	20/2	5			3190	6	20/2	1595	STRING 8	G
G		1595		7	3190			8		1595		G
G	STRING 3	1595	20/2	9		3190		10	20/2	1595	STRING 9	G
G		1595		11			3190	12		1595		G
G	STRING 4	1595	20/2	13	3190			14	20/2	1595	STRING 10	G
G		1595		15		3190		16		1595		G
G	STRING 5	1595	20/2	17			3190	18	20/2	1595	STRING 11	G
G		1595		19	3190			20		1595		G
G	STRING 6	1595	20/2	21		3190		22	20/2	1595	STRING 12	G
G		1595		23			3190	24		1595		G
	SPACE			25	2			26		2		G
	SPACE			27		2		28	30/3	2	SPD	G
	SPACE			29			2	30		2		G

12762 12762 12762

SIZE:	150A FRAME	GROUND:	STANDARD	NOTES:	
VOLTAGE:	208	MOUNTING:	SURFACE	PROVIDE APPLICABLE LABELING AT	
PHASE:	3	ENCLOSURE:	NEMA 3R	DISCONNECT IN ACCORDANCE WITH	
WIRE:	4	FED FROM:	PV MICROINVERTERS	CEC 690.53.	
MAIN:	LUGS	CONNECTED KVA:	38.3		
BREAKER AIC RATING:	22K (VERIFY)	CONNECTED AMPS:	106.4		
BUS:	COPPER	CEC KVA:	38.3		
NEUTRAL:	STANDARD	CEC AMPS:	106.4		

CODE DESCRIPTIONS: L = LIGHTING, R = RECEPTACLE, G = GENERAL EQUIPMENT, C = CONTINUOUS, H = HVAC, M = MOTOR

PANEL: PANEL PV — LOCATION: ELECTRICAL ROOM

CODE	DESCRIPTION	LOAD	BKR	CIR	A	B	C	CIR	BKR	LOAD	DESCRIPTION	CODE
G	PV COMBINER PANEL A	19142	200/3	1	31904			2	150/3	12762	PV COMBINER PANEL B	G
G		15952		3		28714		4		12762		G
G		15952		5			28714	6		12762		G
G	REVENUE GRADE GATEWAY 1	3	20/2	7	6			8	20/2	3	REVENUE GRADE GATEWAY 2	G
G		3		9		6		10		3		G
	SPACE			11			0	12			SPACE	
	SPACE			13				14			SPACE	
	SPACE			15				16			SPACE	
	SPACE			17				18			SPACE	
	SPACE			19				20			SPACE	
	SPACE			21				22			SPACE	
	SPACE			23				24			SPACE	
	SPACE			25				26			SPACE	
	SPACE			27				28			SPACE	
	SPACE			29				30			SPACE	

31910 28720 28714

SIZE:	400A FRAME	GROUND:	STANDARD	NOTES:	
VOLTAGE:	208	MOUNTING:	SURFACE	PROVIDE APPLICABLE LABELING AT	
PHASE:	3	ENCLOSURE:	NEMA 1	DISCONNECT IN ACCORDANCE WITH	
WIRE:	4	FED FROM:	PV COMBINER PANELS	CEC 690.53.	
MAIN:	350 A	CONNECTED KVA:	89.3		
BREAKER AIC RATING:	22K (VERIFY)	CONNECTED AMPS:	248.2		
BUS:	COPPER	CEC KVA:	89.3		
NEUTRAL:	STANDARD	CEC AMPS:	248.2		

CODE DESCRIPTIONS: L = LIGHTING, R = RECEPTACLE, G = GENERAL EQUIPMENT, C = CONTINUOUS, H = HVAC, M = MOTOR

PANEL: P — LOCATION: ELECTRICAL ROOM

CODE	DESCRIPTION	LOAD	BKR	CIR	A	B	C	CIR	BKR	LOAD	DESCRIPTION	CODE
R	ROOFTOP RECPT'S.	900	20/1	1	1400			2	20/1 **	500	FIRE ALARM CONTROL PNL.	G
R	RECPTS. - 109	1440	20/1	3		1940		4	20/1	500	RECPT. CONTROL RELAY PNL.	G
R	RECPTS. - 110	1440	20/1	5			1540	6	20/1	100	IRRIGATION CONTROLLER	G
R	RECPTS. - 125-129, 136	1080	20/1	7	2080			8	20/1*	1000	HAND DRYER	M
G	LACTATION REFRIG.	900	20/1	9		1900		10	20/1*	1000	HAND DRYER	M
R	RECPTS. - MISC. NORTH SIDE	720	20/1	11			1720	12	20/1*	1000	HAND DRYER	M
R	RECPTS. - PUBLIC AREA WEST	1080	20/1	13	2080			14	20/1*	1000	HAND DRYER	M
R	RECPTS. - PUBLIC AREA EAST	720	20/1	15		1720		16	20/1*	1000	HAND DRYER	M
R	RECPTS. - 116, 117	720	20/1	17			1720	18	20/1*	1000	HAND DRYER	M
R	RECPTS. - 114, 116, 113	1080	20/1	19	1440			20	20/1	360	RECPTS. - EMPE. RR	R
R	RECPTS. - MISC. SOUTHEAST	900	20/1	21		1080		22	20/1	180	RECPT. - ELEC. RM	R
G	QUE SYSTEM MONITORS	750	20/1	23			1650	24	20/1	900	EMPLOYEE ROOM REFRIG.	G
	SPARE		20/1	25	900			26	20/1	900	EMPLOYEE ROOM REFRIG.	G
	SPARE		20/1	27		1200		28	20/1	1200	EMPLOYEE ROOM VEND. MACH.	G
	SPARE		20/1	29			1200	30	20/1	1200	EMPLOYEE ROOM VEND. MACH.	G
M	GATE OPER'S. - SOUTH	728	20/2	31	1700			32	20/1	972	EMPLOYEE ROOM DISPOSAL	M
M		728		33		2228		34	20/1	1500	EMPLOYEE COUNTER RECEPT.	G
M	GATE OPER'S. - NORTH	728	20/2	35			2228	36	20/1	1500	EMPLOYEE COUNTER RECEPT.	G
M		728		37	2228			38	20/1	1500	EMPLOYEE COUNTER RECEPT.	G
R	MSF - 120	900	20/2	39		2400		40	20/1	1500	EMPLOYEE COUNTER RECEPT.	G
R		360		41			1440	42	20/1	1080	EMPLOYEE RM. RECPTS.	R
R	MSF - 122	1080	20/1	43	2080			44	20/1*	1000	DOOR OPERATOR	M
R	MSF - 123	540	20/2	45		2040		46	20/1	1500	QUE & SELF SERVE KIOSKS	G
R		180		47			2080	48	20/1	1900	COPIER - 116	G
R	RECPTS. - 124	1080	20/1	49	2980			50	20/1	1900	COPIER - 116	6
R	MSF - 124	1080	20/1	51		1980		52	20/2	900	MSF - 116	R
R	MSF - 102	540	20/1	53			900	54		360		R
R	MSF - 102	540	20/1	55	1260			56	20/2	720	MSF - 116	R
R	MSF - 107	720	20/2	57		1080		58		360		R
R		720		59			1440	60		720		R
R	MSF - 111	900	20/1	61	1620			62	20/3	720	MSF - 116	R
R	MSF - 111	720	20/1	63		1440		64		720		R
R	MSF - 112	540	20/2	65			1440	66		900		R
R		540		67	1440			68	20/3	900	MSF - 116	R
R	MSF - 113	540	20/2	69		1260		70		720		R
R		360		71			1080	72		720		R
R	MSF - 114	360	20/2	73	1080			74	20/3	720	MSF - 116	R
R		360		75		1080		76		720		R
R	MSF - 116	720	20/2	77			1080	78	20/2	360	MSF - 117	R
R		540		79	900			80		360		R
R	MSF - 116	360	20/2	81		720		82	20/2	360	MSF - 117	R
R		360		83			540	84		180		R

23188 22068 20058

SIZE:	225A	GROUND:	STANDARD	NOTES:	
VOLTAGE:	208	MOUNTING:	SURFACE	* FURNISH BREAKER WITH PADLOCKING	
PHASE:	3	ENCLOSURE:	NEMA 1	TABS.	
WIRE:	4	FED FROM:	MSB		
MAIN:	LUGS	CONNECTED KVA:	65.3	** FURNISH BREAKER WITH BLOCK-ON	
EMPEER AIC RATING:	22K (VERIFY)	CONNECTED AMPS:	181.4	DEVICE & PAINT HANDLE RED.	
BUS:	COPPER	CEC KVA:	50.3		
NEUTRAL:	STANDARD	CEC AMPS:	139.8		

CODE DESCRIPTIONS: L = LIGHTING, R = RECEPTACLE, G = GENERAL EQUIPMENT, C = CONTINUOUS, H = HVAC, M = MOTOR

PANEL: C — LOCATION: COMMUNICATION ROOM

CODE	DESCRIPTION	LOAD	BKR	CIR	A	B	C	CIR	BKR	LOAD	DESCRIPTION	CODE
G	BACKBOARD FOURPLEX	500	20/1	1	500			2	PFB		SPACE	
G	RACK I.G. RECEPT.	1000	20/1	3		1000		4	PFB		SPACE	
G	RACK I.G. RECEPT.	1000	20/1	5			1000	6	PFB		SPACE	
G	RACK I.G. RECEPT.	1000	20/1	7	1000			8	PFB		SPACE	
G	RACK I.G. RECEPT.	1000	20/1	9		1000		10	PFB		SPACE	
G	RACK I.G. RECEPT.	1000	20/1	11			1000	12	PFB		SPACE	
G	RACK I.G. RECEPT.	1000	20/1	13	1000			14	PFB		SPACE	
G	SECURITY CONTROL PNL.	500	20/1	15		500		16	PFB		SPACE	
G	ACCESS CONTROL PNL.	650	20/1	17			650	18	PFB		SPACE	
	SPARE		20/1	19	0			20	PFB		SPACE	
	SPARE		20/1	21		0		22	PFB		SPACE	
	SPARE		20/1	23			0	24	PFB		SPACE	
	SPARE		20/1	25	0			26	PFB		SPACE	
	SPARE		20/1	27		0		28	PFB		SPACE	
	SPARE		20/1	29			0	30	PFB		SPACE	

2500 2500 2650

SIZE:	100A	GROUND:	ISOLATED & NORMAL	NOTES:	
VOLTAGE:	208	MOUNTING:	SURFACE		
PHASE:	3	ENCLOSURE:	NEMA 1		
WIRE:	4	FED FROM:	MSB		
MAIN:	100/3 C.B.	CONNECTED KVA:	7.7		
BREAKER AIC RATING:	22K (VERIFY)	CONNECTED AMPS:	21.3		
BUS:	COPPER	CEC KVA:	7.7		
NEUTRAL:	STANDARD	CEC AMPS:	21.3		

CODE DESCRIPTIONS: L = LIGHTING, R = RECEPTACLE, G = GENERAL EQUIPMENT, C = CONTINUOUS, H = HVAC, M = MOTOR

PANEL: L — LOCATION: ELECTRICAL ROOM

CODE	DESCRIPTION	LOAD	BKR	CIR	A	B	C	CIR	BKR	LOAD	DESCRIPTION	CODE
L	LTG. - REAR WEST, CORR.	834	20/1	1	834			2	20/2		SPARE	
L	LTG. - REAR EAST	878	20/1	3		878		4				
L	LTG. - WEST	1146	20/1	5			1146	6	20/2		SPARE	
L	LTG. - DRIVE CANOPY	702	20/1	7	702			8				
L	LTG. - PUBLIC AREA	1459	20/1	9		1606		10	20/2	147	PARKING LOT LIGHTING -	L
L	LTG. - PRODUCTION AREA	1248	20/1	11			1395	12		147	SOUTHEAST	L
G	LIGHTING CONTROL SYSTEM	100	20/1	13	419			14	20/2	319	PARKING LOT LIGHTING -	L
	SPARE		20/1	15		319		16		319	NORTHWEST	L
	SPARE		20/1	17			718	18	30/2	718	EXTERIOR EGRESS LIGHTING	L
	SPACE		PFB	19	718			20		718	VIA INVERTER SYSTEM	L
	SPACE		PFB	21		0		22	PFB		SPACE	
	SPACE		PFB	23			0	24	PFB		SPACE	
	SPACE		PFB	25	0			26	PFB		SPACE	
	SPACE		PFB	27		0		28	PFB		SPACE	
	SPACE		PFB	29			0	30	PFB		SPACE	

2673 2803 3259

SIZE:	100A	GROUND:	STANDARD	NOTES:	
VOLTAGE:	208	MOUNTING:	SURFACE		
PHASE:	3	ENCLOSURE:	NEMA 1		
WIRE:	4	FED FROM:	MSB		
MAIN:	LUGS	CONNECTED KVA:	8.7		
BREAKER AIC RATING:	22K (VERIFY)	CONNECTED AMPS:	24.3		
BUS:	COPPER	CEC KVA:	10.9		
NEUTRAL:	STANDARD	CEC AMPS:	30.3		

CODE DESCRIPTIONS: L = LIGHTING, R = RECEPTACLE, G = GENERAL EQUIPMENT, C = CONTINUOUS, H = HVAC, M = MOTOR

PANEL: EV — LOCATION: ELECTRICAL ROOM

CODE	DESCRIPTION	LOAD	BKR	CIR	A	B	C	CIR	BKR	LOAD	DESCRIPTION	CODE
C	ELECTRIC VEHICLE	3120	40/2	1	6240			2	40/2	3120	ELECTRIC VEHICLE	C
C	CHARGING STATION	3120		3		6240		4		3120	CHARGING STATION	C
C	ELECTRIC VEHICLE	3120	40/2	5			6240	6	40/2	3120	ELECTRIC VEHICLE	C
C	CHARGING STATION	3120		7	6240			8		3120	CHARGING STATION	C
C	ELECTRIC VEHICLE	3120	40/2	9		6240		10	40/2	3120	ELECTRIC VEHICLE	C
C	CHARGING STATION	3120		11			6240	12		3120	CHARGING STATION	C
C	ELECTRIC VEHICLE	3120	40/2	13	6240			14	40/2	3120	ELECTRIC VEHICLE	C
C	CHARGING STATION	3120		15		6240		16		3120	CHARGING STATION	C
C	ELECTRIC VEHICLE	3120	40/2	17			6240	18	40/2	3120	ELECTRIC VEHICLE	C
C	CHARGING STATION	3120		19	6240			20		3120	CHARGING STATION	C
	SPARE		40/2	21		0		22	40/2		SPARE	
				23			0	24				
	SPACE		PFB	25	0			26	PFB		SPACE	
	SPACE		PFB	27		0		28	PFB		SPACE	
	SPACE		PFB	29			0	30	PFB		SPACE	
	SPACE		PFB	31	0			32	PFB		SPACE	
	SPACE		PFB	33		0		34	PFB		SPACE	
	SPACE		PFB	35			0	36	PFB		SPACE	
	SPACE		PFB	37	0			38	PFB		SPACE	
	SPACE		PFB	39		0		40	PFB		SPACE	
	SPACE		PFB	41			0	42	PFB		SPACE	

24960 18720 18720

SIZE:	400A	GROUND:	STANDARD	NOTES:	
VOLTAGE:	208	MOUNTING:	SURFACE	ALL CIRCUIT BREAKERS SHALL BE	
PHASE:	3	ENCLOSURE:	NEMA 1	EQUIPPED WITH PADLOCKING TABS.	
WIRE:	4	FED FROM:	MSB		
MAIN:	LUGS	CONNECTED KVA:	62.4		
BREAKER AIC RATING:	22K (VERIFY)	CONNECTED AMPS:	173.3		
BUS:	COPPER	CEC KVA:	82.0		
NEUTRAL:	STANDARD	CEC AMPS:	227.7		

CODE DESCRIPTIONS: L = LIGHTING, R = RECEPTACLE, G = GENERAL EQUIPMENT, C = CONTINUOUS, H = HVAC, M = MOTOR

PANEL: M — LOCATION: ELECTRICAL ROOM

CODE	DESCRIPTION	LOAD	BKR	CIR	A	B	C	CIR	BKR	LOAD	DESCRIPTION	CODE
H	CU-1 & FC-1	1090	25/2	1	2548			2	20/3	1458	AC-1	H
H		1090		3		2548		4		1458		H
H	EF-1	696	20/1	5			2154	6	60/3	1458	AC-2	H
H	EF-2	696	20/1	7	4740			8		4044		H
H	EF-3	696	20/1	9		4740		10		4044		H
H	EF-4	696	20/1	11			4740	12		4044		H
H	EF-5	696	20/1	13	4740			14		4044		H
G	EWH-1	2080	20/2	15		6124		16	60/3	4044	AC-3	H
G		2080		17			6124	18		4044		H
G	EWH-2	2080	20/2	19	5123			20	40/3	3043	AC-4	H
G		2080		21		5123		22		3043		H
G	EWH-3	2080	20/2	23			5123	24		3043		H
G		2080		25	3538			26		1458		H
G	EWH-4	4160	40/2	27		5618		28	20/3	1458	AC-5	H
G		4160		29			5618	30		1458		H
G	EWH-5	4160	40/2	31	5618			32		1458		H
G		4160		33		5618		34	20/3	1458	AC-6	H
G	EWH-6	4160	40/2	35			5618	36		1458		H
G		4160		37	4160			38	PFB		SPACE	
G	TEMP. CONTROL EQUIP.	1500	20/1	39		1500		40	PFB		SPACE	
	SPARE		20/1	41			0	42	PFB		SPACE	

30467 31271 29377

SIZE:	400A	GROUND:	STANDARD	NOTES:	
VOLTAGE:	208	MOUNTING:	SURFACE	ALL CIRCUIT BREAKERS SHALL BE	
PHASE:	3	ENCLOSURE:	NEMA 1	HACR TYPE & EQUIPPED WITH	
WIRE:	4	FED FROM:	MSB	PADLOCKING TABS.	
MAIN:	LUGS	CONNECTED KVA:	91.1		
BREAKER AIC RATING:	22K (VERIFY)	CONNECTED AMPS:	253.1		
BUS:	COPPER	CEC KVA:	100.2		
NEUTRAL:	STANDARD	CEC AMPS:	278.3		

CODE DESCRIPTIONS: L = LIGHTING, R = RECEPTACLE, G = GENERAL EQUIPMENT, C = CONTINUOUS, H = HVAC, M = MOTOR

IDENTIFICATION STAMP
DIV. OF THE STATE ARCHITECT
APP: 03-121324 INC: A
REVIEWED FOR
SS ☐ FLS ☐ ACS ☑
DATE: 09/14/2022

OFFICE OF THE STATE FIRE MARSHAL
APPROVED FIRE AND PANIC ONLY
09/07/22
21-0233
Approval of this plan does not authorize or approve any omission or deviation from applicable regulations. Final approval is subject to field inspection. One set of approved plans shall be available on the project site at all times.

DGS GENERAL SERVICES
Department of General Services
Architecture & Engineering Sections
State of California
Real Estate Services Division
Project Management & Development Branch
707 Third Street, Suite 4-105
West Sacramento, California 95605

REGISTERED PROFESSIONAL ENGINEER — JOSEPH H. ABDELSAYD — No. E-18915 — ELECTRICAL — STATE OF CALIFORNIA

DMV
State of California
Department of Motor Vehicles

Issue

No.	Date	Description
1	9/2/22	

Project
SANTA MARIA FIELD OFFICE REPLACEMENT
2770 SANTA MARIA WAY
SANTA MARIA, CA 93455
SANTA BARBARA COUNTY
DEPT OF MOTOR VEHICLES

Supervisor	Designed	Drawn
J.ABDELSAYD	J. KELLY	J. KELLY

DSA App No. 03-121324
SFM Permit No. 21-S-0233-CP-ER
Sheet Title: PANEL SCHEDULES
Project Number: DGS000000140725
Reference North
Sheet Scale: NONE
Sheet Number: E621

Copyright © 2022, California Department of General Services - Real Estate Services Division

1 PANEL SCHEDULES

CAD File: X:\Projects\14xxxx\140725\DWG\PLTIE621.dwg Plot Date: Sep 02, 2022 - 3:39pm Plotted by: jkelly

RELATIVE BORDER SCALE IN INCHES 0 1 2 3

TYPE	USE	DESCRIPTION	MANUFACTURER
A	NETWORKED CONTROLS CONNECTION	CATEGORY 6	BELDEN, BERK-TEK, MOHAWK OR EQUAL

2 CABLE SCHEDULE — NO SCALE

PULL BOX SCHEDULE

TYPE	BASIS OF DESIGN MANUFACTURER	MODEL	TRAFFIC TIER RATING	CONSTRUCTION			DISCRIPTION	NOMINAL DIMENSIONS			REMARKS
				BODY	COVER	LABEL		WIDTH	LENGTH	DEPTH	
1	HUBBELL/QUAZITE	1730 PG	8	POLYMER CONCRETE	POLYMER CONCRETE	PG&E	OPEN BOTTOM, BOLT-DOWN COVER.	17	30	26	SET IN LANDSCAPE AREA
2	HUBBELL/QUAZITE	1118 PG	15	POLYMER CONCRETE	POLYMER CONCRETE	ELECTRIC	OPEN BOTTOM, BOLT-DOWN COVER.	11	18	18	SET IN PAVED AREA
3	HUBBELL/QUAZITE	1015 PG	8	POLYMER CONCRETE	POLYMER CONCRETE	LIGHTING	OPEN BOTTOM, BOLT-DOWN COVER.	10	15	12	SET ADJACENT TO LIGHT POLE
4	HUBBELL/QUAZITE	1015 PG	15	POLYMER CONCRETE	POLYMER CONCRETE	LIGHTING	OPEN BOTTOM, BOLT-DOWN COVER.	10	15	12	SET IN PAVED AREA
5	HUBBELL/QUAZITE	1118 PG	8	POLYMER CONCRETE	POLYMER CONCRETE	ELECTRIC	OPEN BOTTOM, BOLT-DOWN COVER.	11	18	18	SET IN LANDSCAPE AREA
6	HUBBELL/QUAZITE	1015 PG	15	POLYMER CONCRETE	POLYMER CONCRETE	FIRE ALARM	OPEN BOTTOM, BOLT-DOWN COVER.	10	15	12	SET IN PAVED AREA
7	HUBBELL/QUAZITE	1015 PG	15	POLYMER CONCRETE	POLYMER CONCRETE	FIRE ALARM	OPEN BOTTOM, BOLT-DOWN COVER.	10	15	12	SET IN PAVED AREA
8	HUBBELL/QUAZITE	1118 PG	8	POLYMER CONCRETE	POLYMER CONCRETE	ELECTRIC	OPEN BOTTOM, BOLT-DOWN COVER.	11	18	18	SET IN LANDSCAPE AREA
9	HUBBELL/QUAZITE	1118 PG	8	POLYMER CONCRETE	POLYMER CONCRETE	ELECTRIC	OPEN BOTTOM, BOLT-DOWN COVER.	11	18	18	SET IN LANDSCAPE AREA

1 PULL BOX SCHEDULE — NO SCALE

IDENTIFICATION STAMP
DIV. OF THE STATE ARCHITECT
APP: 03-121324 INC:
REVIEWED FOR
SS ☐ FLS ☐ ACS ☑
DATE: 09/14/2022

OFFICE OF THE STATE FIRE MARSHAL
APPROVED FIRE AND PANIC ONLY
09/07/22
21-0233
Approval of this plan does not authorize or approve any omission or deviation from applicable regulations. Final approval is subject to field inspection. One set of approved plans shall be available on the project site at all times.

DGS GENERAL SERVICES
Department of General Services
Architecture & Engineering Sections
State of California
Real Estate Services Division
Project Management & Development Branch
707 Third Street, Suite 4-105
West Sacramento, California 95605

REGISTERED PROFESSIONAL ENGINEER
JOSEPH H ABDELSAYD
No. E-18915
ELECTRICAL
STATE OF CALIFORNIA

DMV
State of California
Department of Motor Vehicles

Issue

No.	Date	Description
1	9/2/22	

Project
SANTA MARIA FIELD OFFICE REPLACEMENT

2770 SANTA MARIA WAY
SANTA MARIA, CA 93455
SANTA BARBARA COUNTY

DEPT OF MOTOR VEHICLES

Supervisor	Designed	Drawn
J.ABDELSAYD	EEU	EEU

DSA App No.	SFM Permit No.
03-121324	21-S-0233-CP-ER

Sheet Title
PULL BOX & CABLE SCHEDULES

Project Number
DGS000000140725

Reference North	Sheet Scale
	NONE
	Sheet Number E622

Copyright © 2022, California Department of General Services - Real Estate Services Division

CAD File: X:\Projects\14xxxx\140725\DWG\PLTIE622.dwg Plot Date: Jul 11, 2022 - 5:20pm Plotted by: jkelly

RELATIVE BORDER SCALE IN INCHES 0 1 2 3

TYPE	DESCRIPTION	MANUFACTURER	LED DESCRIPTION	LED CONTROL	TOTAL WATTS	VOLT	MOUNTING
A1	2'x2' RECESSED LED TROFFER, CENTER RIBBED EXTRUDED ACRYLIC LENS WITH SQUARE CROSS-SECTION, WHITE POWDER COAT REFLECTOR, DIE-FORMED STEEL ENCLOSURE PAINTED AFTER FABRICATION, HIGH EFFICIENCY DRIVER, INTEGRATED "nLIGHT" CONTROLS WITH 80% LUMEN MANAGEMENT, INSTALL WITH LONG AXIS OF LENS ORIENTED PER ARROW ON PLAN.	LITHONIA "2BLT" SERIES #2BLT2 33LHE ADP EZ1 LP835 N80 DAY-BRITE "ARIOSO" SERIES OR EQUAL	3628 LM 3500° K 80+ CRI	0-10V DIMMING TO 1%	28	120	RECESSED, T-BAR CEILING
A2		LITHONIA "2BLT" SERIES #2BLT2 40LHE ADP EZ1 LP835 N80 DAY-BRITE "ARIOSO" SERIES OR EQUAL	4224 LM 3500° K 80+ CRI		32	120	
A3		LITHONIA "2BLT" SERIES #2BLT2 48LHE ADP EZ1 LP835 N80 DAY-BRITE "ARIOSO" SERIES OR EQUAL	4820 LM 3500° K 80+ CRI		37	120	
B1	2-3/8"x3"x4' WALL MOUNTED LED WRAPAROUND, SQUARE LINEAR PRISM EXTRUDED ACRYLIC LENS, DIE FORMED STEEL BODY, TEXTURED MATTE WHITE FINISH.	PRUDENTIAL "SNAP" SERIES #S1 LED35 SO 4' SAL TMW SUR X3 DM01 EBCP2G OR EQUAL	3600LM 3500° K 80+ CRI	0-10V DIMMING TO 1%	36	120	WALL @ +7'-3" TO CENTER
B2	3' VERSION OF TYPE B1.	PRUDENTIAL "SNAP" SERIES #S1 LED35 SO 3' SAL TMW SUR X3 DM01 EBCP2G OR EQUAL	2700 LM 3500° K 80+ CRI	0-10V DIMMING TO 1%	27	120	WALL @ +7'-3" TO CENTER
B3	CEILING MOUNTED VERSION OF TYPE B1.	PRUDENTIAL "SNAP" SERIES #S1 LED35 SO 4' SAL TMW SUR X3 DM01 EBCP2G OR EQUAL	3600 LM 3500° K 80+ CRI	0-10V DIMMING TO 1%	36	120	SURFACE, GYP. BD. CEILING
B4	LOW OUTPUT CEILING MOUNTED VERSION OF TYPE B1.	PRUDENTIAL "SNAP" SERIES #S1 LED35 LO 4' SAL TMW SUR X3 DM01 EBCP2G OR EQUAL	1920 3500° K 80+ CRI	0-10V DIMMING TO 1%	17	120	SURFACE, GYP. BD. CEILING
C1	2'x2' LED EDGE-LIT LED FLAT PANEL, EXTRUDED ALUMINUM FRAME, STEEL BACK PLATE, INTEGRAL T-BAR CLIPS, HIGH EFFICIENCY DRIVER, INTEGRATED "nLIGHT" CONTROLS, U.S. POINT OF MANUFACTURE.	LITHONIA "EPANL" SERIES #EPANL 2X2 34OOLMHE 80CRI 35K MIN1 NLIGHT USPOM DAY-BRITE "FXP" SERIES OR EQUAL	1900 LM 3500° K 80+ CRI	0-10V DIMMING TO 1%	16	120	RECESSED, T-BAR CEILING
C2		LITHONIA "EPANL" SERIES #EPANL 2X2 34OOLMHE 80CRI 35K MIN1 "nLIGHT" USPOM DAY-BRITE "FXP" SERIES OR EQUAL	3300 LM 3500° K 80+ CRI		27	120	
C3		LITHONIA "EPANL" SERIES #EPANL 2X2 4800LMHE 80CRI 35K MIN1 "nLIGHT" USPOM DAY-BRITE "FXP" SERIES OR EQUAL	4500 LM 3500° K 80+ CRI		36	120	
D1	5"x3-3/4"x4' EXTRUDED ALUMINUM HIGH ABUSE LED WRAPAROUND, ROUND LINEAR PRISM EXTRUDED PEARLESCENT POLYCARBONATE LENS, FLAT END CAPS, MATTE WHITE FINISH.	KENALL "MLHA5" SERIES #MLHA5 48 F MW PP 45L35K DCC 1 CDF 9500 LUMINAIRE "VERTEX" SERIES OR EQUAL	4748 LM 3500° K 80+ CRI	STANDARD	49	120	WALL @ +7'-6" TO CENTER
D2	2' VERSION OF TYPE D1.	KENALL "MLHA5" SERIES #MLHA5 24 F MW PP 25L35K DCC 1 CDF 9500 LUMINAIRE "VERTEX" SERIES OR EQUAL	2374 LM 3500° K 80+ CRI	STANDARD	25	120	WALL @ +7'-6" TO CENTER
E1	UNDER CABINET LED TASK LIGHT, 18" LONG, SWIVEL ADJUSTABLE OPTICAL HEAD, INTEGRAL ROCKER SWITCH, ALUMINUM BODY, WHITE FINISH.	LITHONIA "UCLD" SERIES #UCLD 18IN 35K 90CRI SWR WH OR EQUAL	585 LM 3500° K 90+ CRI		10	120	SURFACE, UNDER CABINET
F1	SKYLIGHT LED PACKAGE WITH BATTERY PACK,TUNABLE WHITE LED PACKEGE (2700K-6500K), INTEGRATED "nLIGHT" CONTROLS, SATIN LENS ASSEMBLY. NOTE - THIS IS AN ACCESSORY FOR SKYLIGHTS SPECIFIED ELSEWHERE IN THESE DOCUMENTS, SEE ARCHITECTURAL.	SUNOPTICS "LIGHTFLEX LED" SERIES #SLFTL TUWH RHYR NLT 80CRI E10W TLSATIN SKYLIGHT ACCESSORY, SUBSTITUTION GOVERNED BY SKYLIGHT.	2800 LM 3500° K 80+ CRI	0-10V DIMMING TO 1%	54	120	INTEGRATED WITH SKYLIGHT LIGHTWELL
G1	LED WALL BRACKET, CAST ALUMINUM BASE WITH POLYCARBONATE LENS AND BEZEL, CLEAR PRISMATIC LENS, xxx=COLOR TO BE DETERMINED.	LUMINAIRE "SWOOP 610" SERIES #YWP610 15W 3000K CP xxx KENALL "HERCULUX" SERIES OR EQUAL	664 LM 3000° K	STANDARD	14	120	WALL @ +7' TO TOP
H1	LED POLE LIGHT, TYPE III DISTRIBUTION, SINGLE HEAD, CAST ALUMINUM HOUSING WITH HEAT SINK FINS, DARK BRONZE POWDER COAT FINISH, INTEGRAL MOTION/AMBIENT LIGHT SENSOR, WITH 20' x 4.5" ROUND STRAIGHT STEEL POLE WITH FULL CAST AL BASE COVER, US MANUFACTURED.	LITHONIA "D" SERIES #(2)DSX0 LED P2 30K T3M RPA PIRH DDBXD / RSS 20 4-5B DM19AS TP RFBC-AL USPOM GARDCO "ECO FORM" SERIES OR EQUAL	5580 LM (20) @ 700mA 3000° K	BI-LEVEL 100%/10%	49	208	20' POLE ON 2' RAISED BASE
H2	LED POLE LIGHT, TYPE III DISTRIBUTION, TWIN HEAD @ 180°, TO MATCH TYPE "H1".	LITHONIA "D" SERIES #(2)DSX0 LED P2 30K T3M RPA PIRH DDBXD / RSS 20 4-5B DM28AS TP RFBC-AL USPOM GARDCO "ECO FORM" SERIES OR EQUAL	5580 LM (20) @ 700mA 3000° K	BI-LEVEL 100%/10%	98	208	20' POLE ON 2' RAISED BASE

TYPE	DESCRIPTION	MANUFACTURER	LED DESCRIPTION	LED CONTROL	TOTAL WATTS	VOLT	MOUNTING
H3	LED POLE LIGHT, TYPE III DISTRIBUTION, TRIPLE HEAD @ 120°, TO MATCH TYPE "H1".	LITHONIA "D" SERIES #(3)DSX0 LED P2 30K T3M RPA PIRH DDBXD / RSS 20 4-5B DM32AS TP RFBC-AL USPOM GARDCO "ECO FORM" SERIES OR EQUAL	5580 LM (20) @ 700mA 3000° K	BI-LEVEL 100%/10%	147	208	20' POLE ON 2' RAISED BASE
H4	LED POLE LIGHT, TYPE IV DISTRIBUTION, SINGLE HEAD, TO MATCH TYPE "H1".	LITHONIA "D" SERIES #DSX0 LED P2 30K T4M RPA PIRH DDBXD / RSS 20 4-5B DM19AS TP RFBC-AL USPOM GARDCO "ECO FORM" SERIES OR EQUAL	5580 LM (20) @ 700mA 3000° K	BI-LEVEL 100%/10%	49	208	20' POLE ON 2' RAISED BASE
H5	LED POLE LIGHT, TYPE IV DISTRIBUTION WITH HOUSE SIDE SHIELD, TWIN HEAD @ 90°, TO MATCH TYPE "H1".	LITHONIA "D" SERIES #(2)DSX0 LED P2 30K T4M RPA PIRH HS DDBXD / RSS 20 4-5B DM29AS TP RFBC-AL USPOM GARDCO "ECO FORM" SERIES OR EQUAL	5458 LM (20) @ 700mA 3000° K	BI-LEVEL 100%/10%	98	208	20' POLE ON 2' RAISED BASE
H6	LED POLE LIGHT, TYPE II DISTRIBUTION WITH HOUSE SIDE SHIELD, SINGLE HEAD, TO MATCH TYPE "H1".	LITHONIA "D" SERIES #DSX0 LED P2 30K T2M RPA PIRH HS DDBXD / RSS 20 4-5B DM19AS TP RFBC-AL USPOM GARDCO "ECO FORM" SERIES OR EQUAL	5593 LM (20) @ 700mA 3000° K	BI-LEVEL 100%/10%	49	208	20' POLE ON 2' RAISED BASE
H7	SMALL LED POLE LIGHT, TYPE III SHORT DISTRIBUTION, INTEGRAL MOTION/AMBIENT SENSOR, TWIN HEAD @ 180°, TO MATCH TYPS "H1", WITH 15'x 4" ROUND STRAIGHT STEEL POLE.	LITHONIA "D" SERIES #(2)DSXWPM LED 10C 700 30K T3M RPUMB PIRH DDBXD / RSS 15 4B DM28AS TP RFBC-AL USPOM DDBXD GARDCO "ECO FORM" SERIES OR EQUAL	2593 LM (10) @ 700mA 3000° K	BI-LEVEL 100%/10%	54	208	15' POLE ON FLUSH BASE
H7A	SMALL LED POLE LIGHT, SINGLE HEAD, TO MATCH TYPE "H7".	LITHONIA "D" SERIES #DSXWPM LED 10C 700 30K T3M RPUMB PIRH DDBXD / RSS 15 4B DM19AS TP RFBC-AL USPOM DDBXD GARDCO "ECO FORM" SERIES OR EQUAL	2593 LM (10) @ 700mA 3000° K	BI-LEVEL 100%/10%	27	208	15' POLE ON FLUSH BASE
H8	LED WALL PACK, TYPE III SHORT DISTRIBUTION, TO MATCH TYPE "H1", WITH SURFACE MOUNTING BACKBOX.	LITHONIA "D" SERIES #DSXW1 LED 10C 700 30K T3S BBW PIR DDBXD GARDCO "ECO FORM" SERIES OR EQUAL	2593 LM (10) @ 700mA 3000° K	BI-LEVEL 100%/10%	27	208	PV CANOPY SUPPORT COLUMN @ +15'.
I1	8" SQUARE LED DOWNLIGHT, WET LOCATION WITH COVERED CEILING RATED, GALVANIZED STEEL MOUNTING FRAME, PASSIVE COOLING, DIFFUSING LENS ON OPTICAL CHAMBER, SELF-FLANGED CLEAR MATTE DIFFUSE ANODIZED REFLECTOR.	LITHONIA "LDN8SQ" SERIES #LDN8SQ 30/100 LS8 AR LD WL OR EQUAL	9631 LM 3000° K	STANDARD	117	120	RECESSED, CANOPY
I2	6" SQUARE LED DOWNLIGHT, DRY LOCATION, TO MATCH TYPE I1, INTEGRATED "nLIGHT" CONTROLS WITH 80% LUMEN MAINTENANCE.	LITHONIA "LDN6SQ" SERIES #LDN6SQ 35/20 LS6 AR LD EZ1 NPS80EZ OR EQUAL	2,006 LM 3500° K	0-10V DIMMING TO 1%	23	120	RECESSED, GYP. BD. CL'G.
I3	6" SQUARE LED WALLWASHER, DRY LOCATION TO MATCH TYPE I1, INTEGRATED "nLIGHT" CONTROLS WITH 80% LUMEN MAINTENANCE.	LITHONIA "LDN6SQ" SERIES #LDN6SQ 35/40 LSW6 AR LD EZ1 NPS80EZ OR EQUAL	3,818 LM 3500° K	0-10V DIMMING TO 1%	47	120	RECESSED, GYP. BD. CEILING
I4	4" SQUARE LED DOWNLIGHT, DRY LOCATION, TO MATCH TYPE I1, INTEGRATED "nLIGHT" CONTROLS WITH 80% LUMEN MAINTENANCE.	LITHONIA "LDN4SQ" SERIES #LDN4SQ 35/15 LS4 AR LSS EZ1 NPS80EZ OR EQUAL	1,615 LM 3500° K	0-10V DIMMING TO 1%	20	120	RECESSED, GYP. BD. SOFFIT
J1	6' SQUARE LED PENDANT, 1"X2.5" ALUMINUM BODY FORMED INTO 72" SQUARE PATTERN, INBOARD & OUTBOARD EDGES ILLUMINATED, ACRYLIC LOUVERS, CUSTOM LENGTH CABLE SUSPENSION, REMOTE DRIVER, xxx=COLOR TO BE DETERMINED.	BETA CALCO "MICRO SQ DE" SERIES #98 2040 T35 S35 S1(VERIFY LENGTH) xxx OR EQUAL	13,105 LM 3500° K 80+ CRI	0-10V DIMMING TO 5%	165	120	SUSPENDED @ HEIGHT PER ARCHITECTURAL DRAWINGS
EM	EMERGENCY LIGHTING UNIT, CAST ALUMINUM BODY, FIXED WIDE THROW OPTICS, 90 MINUTE LITHIUM BATTERY, SELF DIAGNOSTICS, WET LABEL, xxx= COLOR TO BE DETERMINED.	LITHONIA "AFINITY PREMIUM" SERIES #AFF OEL xxx LTP SDRT WT EMERGI-LITE "LUX-RAY" SERIES OR EQUAL	XENON LAMPS	N/A	1	120	WALL @ +8'-6" TO CENTER OR AS NOTED
EM2	EMERGENCY LIGHTING UNIT, IMPACT RESISTANT UV STABLE GREY THERMOPLASTIC BODY, (2) ADJUSTABLE/LOCKING HEADS WITH SPOT OPTICS AND HEAD SHIELD, NEMA 4X RATING , 90 MINUTE LITHIUM BATTERY, SELF DIAGNOSTICS.	LITHONIA "EXTREME" SERIES #EXTL SP1100L LTP SDRT EMERGI-LITE SURVIVE-ALL" SERIES OR EQUAL	(2) HEADS @ 1,100 LM	N/A	3	120	WALL @ +10'-0" TO CENTER AIM AS INDICATED IN PHOTOMETRIC PLAN
EM3	EMERGENCY LIGHTING UNIT, STEEL HOUSING WITH OFF-WHITE FINISH, FURNISHED WITH HANGER BARS FOR T-BAR INSTALLATION, (2) ADJUSTABLE 6V-4W LED MR16 HEADS, 90 MINUTE LEAD-CALCIUM BATTERY, SELF DIAGNOSTICS.	EMERGI-LITE "TS" SERIES #TSM18-210LA-ADNA OR EQUAL	(2) HEADS @ 200 LM	N/A	1	120	RECESSED, T-BAR CEILING AIM AS INDICATED IN PHOTOMETRIC PLAN
X1	SINGLE FACE EXIT SIGN, RECESSED MOUNTING, CAST ALUMINUM CONSTRUCTION, STENCIL FACE, RED LETTERS, BRUSHED ALUMINUM FACE, BLACK BODY, LED LIGHT SOURCE, 90 MINUTE NI-CAD BATTERY, SELF DIAGNOSTICS.	LITHONIA "SIGNATURE" SERIES #LRE S 1 R ELN SD / ELA ERK EMERGI-LITE "PRECEPTOR" SERIES OR EQUAL		N/A	1	120	RECESSED IN WALL/SOFFIT @ 8' TO CENTER UNLESS OTHERWISE NOTED
X2	DOUBLE FACE EXIT SIGN, UNIVERSAL MOUNTING, CAST ALUMINUM CONSTRUCTION, STENCIL FACE, RED LETTERS, BRUSHED ALUMINUM FACE, BLACK BODY, LED LIGHT SOURCE, 90 MINUTE NI-CAD BATTERY, SELF DIAGNOSTICS.	LITHONIA "SIGNATURE" SERIES #LE S 2 R ELN SD EMERGI-LITE "PRECEPTOR" SERIES OR EQUAL		N/A	2	120	END MOUNT TO WALL @ +8' TO CENTER

1 LIGHTING FIXTURE SCHEDULE

PUBLIC AREA, PRODUCTION TERMINALS, ETC. (SHOWN WITHOUT OCCUPANCY SENSORS):
- MANUAL ON TO 85% INTENSITY, MANUAL OFF, MANUAL DIMMING.
- SWEEP OFF AT 7:00 PM, BETWEEN 7:00 PM AND 6:00 AM OPERATION OF MANUAL SWITCH TRIGGERS 2-HOUR OVERRIDE TIMER.
- DAYLIGHTING CONTROL (ROOMS WITH PHOTOSENSORS):
  - PUBLIC AREA: SET DIMMING FOR 30 FOOTCANDLES AS MEASURED 30" ABOVE FLOOR DIRECTLY BELOW SENSOR.
  - PRODUCTION TERMINALS, ETC.: SET DIMMING FOR 60 FOOTCANDLES AS MEASURED 30" ABOVE FLOOR DIRECTLY BELOW SENSOR.

OFFICES, MULTIPURPOSE, EMPLOYEE LOUNGE, ETC. (SHOWN WITH DUAL TECHNOLOGY OCCUPANCY SENSORS AND DIMMING CONTROLS):
- ON BY OCCUPANCY SENSOR TO 66% INTENSITY.
- MANUAL OFF, MANUAL DIMMING.
- OFF BY OCCUPANCY SENSOR (WITH 15 SECOND GRACE PERIOD), 20 MINUTE DELAY.
- DAYLIGHTING CONTROL (ROOMS WITH SKYLIGHTS &/OR WINDOWS):
  - OFFICES, MULTIPURPOSE: ALL FIXTURES, SET DIMMING FOR 60 FOOTCANDLES AS MEASURED 30" ABOVE FLOOR IN CENTER OF ROOM.
  - EMPLOYEE LOUNGE, LOCKERS, LACTATION: ALL FIXTURES, SET DIMMING FOR 30 FOOTCANDLES AS MEASURED 30" ABOVE FLOOR IN CENTER OF ROOM.

PLUG LOADS:
- ON & OFF WITH ROOM LIGHTING TIME OR OCCUPANCY CONTROL.
- NOT AFFECTED BY MANUAL OR AUTOMATIC DIMMING.

JANITOR, STORAGE, ETC. (SHOWN WITH OCCUPANCY SENSORS WITHOUT DIMMING CONTROLS):
- MANUAL ON, MANUAL OFF.
- OFF BY OCCUPANCY SENSOR (WITH 15 SECOND GRACE PERIOD), 10 MINUTE DELAY.

TOILETS:
- AUTOMATIC ON BY OCCUPANCY SENSOR.
- OFF BY OCCUPANCY SENSOR (WITH 15 SECOND GRACE PERIOD), 10 MINUTE DELAY.

CORRIDOR 136 (SKYLIGHTS WITH LED ACCESSORY PACKS):
- AUTOMATIC ON BY OCCUPANCY SENSORS AS ALLOWED BY PHOTOSENSOR.
- DAYLIGHTING CONTROL: SET DIMMING FOR 10 FOOTCANDLES AS MEASURED AT FLOOR LEVEL BETWEEN SKYLIGHTS.
- OFF BY OCCUPANCY SENSORS, 10 MINUTE DELAY.
- CLOSE SKYLIGHT DAMPERS WHEN DARK OUTSIDE AS MEASURED BY WELL-MOUNTED PHOTOSENSORS.

DRIVE TEST CANOPY:
- ON 60 MINUTES BEFORE SUNSET, MONDAY-SATURDAY.
- OFF AT 7:30 PM.

PARKING & BUILDING PERIMETER WALKWAYS:
- ON AT SUNSET.
- DIM TO 10% INTENSITY BY INTEGRAL MOTION SENSOR, 5 MINUTE DELAY, 5 MINUTE FADE.
- ON TO 100% UPON SENSING MOTION, ZERO FADE RATE.
- OFF AT SUNRISE.

3 CONTROLS SEQUENCES OF OPERATION

SYMBOL	DESCRIPTION	MANUFACTURER & CATALOG NUMBER
$LVA	LOW VOLTAGE, NETWORKABLE, SWITCH WITH DIMMING CONTROL.	nLIGHT #nPODM-DX-IV OR EQUAL
$LVB	LOW VOLTAGE, NETWORKABLE, SWITCH.	nLIGHT #nPODM-IV OR EQUAL
OS	LOW VOLTAGE, NETWORKABLE, DUAL TECHNOLOGY, OCCUPANCY SENSOR WALL SWITCH WITH DIMMING & DAYLIGHTING CONTROL.	nLIGHT #nWSX-PDT-LV-DX-IV OR EQUAL
OS	LOW VOLTAGE, NETWORKABLE, DUAL TECHNOLOGY, "SMALL MOTION" COVERAGE, CEILING MOUNTED OCCUPANCY SENSOR.	nLIGHT #nCM-PDT-9-RJB OR EQUAL
OS CM	LOW VOLTAGE, NETWORKABLE, DUAL TECHNOLOGY, CORNER MOUNTED OCCUPANCY SENSOR.	nLIGHT #nWV-PDT-16-KIT OR EQUAL
IM	CONTACT CLOSURE INPUT MODULE FOR nLIGHT SYSTEM.	nLIGHT #nIO 1S KO OR EQUAL
PS	LOW VOLTAGE, NETWORKABLE, CEILING MOUNTED PHOTOSENSOR.	nLIGHT #nCM-ADCX-RJB OR EQUAL
SM	SWITCHING MODULE FOR FIXTURES WITHOUT INTEGRATED nLIGHT CONTROLS	nLIGHT #nPP16 OR EQUAL
DM	DIMMING MODULE FOR FIXTURES WITHOUT INTEGRATED nLIGHT CONTROLS	nLIGHT #nPP16-D OR EQUAL
PL	PLUG LOAD CONTROL MODULE	nLIGHT #nPP20 PL OR EQUAL
LCC	"ECLYPSE" IP INTERFACE WITH ENCLOSURE & TOUCHSCREEN.	nLIGHT #nECY MVOLT BAC ADR ENC GFXK OR EQUAL
B	8-PORT NETWORK BRIDGE	nLIGHT #nBRG 8 OR EQUAL
RCR	RECEPTACLE CONTROL RELAY PANEL, (48) FIELD CONFIGURABLE 1P RELAYS, NEMA 1 SURFACE MOUNTED ENCLOSURE.	nLIGHT #48FCR MVOLT HLK SM / (3)FCR CONFIG. HDWR. OR EQUAL
OS P	LINE VOLTAGE, PASSIVE INFRARED, OCCUPANCY SENSOR WALL SWITCH.	ACUITY CONTROLS #WSX-IV OR EQUAL
OS US	LINE VOLTAGE, ULTRASONIC, OCCUPANCY SENSOR WALL SWITCH.	HUBBELL #AU-2000-xx-1 OR EQUAL
OS US5	LINE VOLTAGE, ULTRASONIC, DUAL RELAY, CEILING MOUNTED OCCUPANCY SENSOR, 500 SQ. FT. COVERAGE (MAY BE CONNECTED TO nLIGHT INPUT MODULE).	LEVITON #O2C05-UDW OR EQUAL
OS US2	LINE VOLTAGE, ULTRASONIC, DUAL RELAY, CEILING MOUNTED OCCUPANCY SENSOR, 2000 SQ. FT. COVERAGE (MAY BE CONNECTED TO nLIGHT INPUT MODULE).	LEVITON #O2C20-UDW OR EQUAL

2 LIGHTING CONTROL DEVICES

IDENTIFICATION STAMP
DIV. OF THE STATE ARCHITECT
APP: 03-121324 INC:
REVIEWED FOR
SS ☐ FLS ☐ ACS ☑
DATE: 09/14/2022

OFFICE OF THE STATE FIRE MARSHAL
APPROVED FIRE AND PANIC ONLY
09/07/22
21-0233
Approval of this plan does not authorize or approve any omission or deviation from applicable regulations. Final approval is subject to field inspection. One set of approved plans shall be available on the project site at all times.

DGS GENERAL SERVICES
Department of General Services
Architecture & Engineering Sections
State of California
Real Estate Services Division
Project Management & Development Branch
707 Third Street, Suite 4-105
West Sacramento, California 95605

REGISTERED PROFESSIONAL ENGINEER
JOSEPH H. ABDELSAYED
No. E-18915
ELECTRICAL
STATE OF CALIFORNIA

DMV
State of California
Department of Motor Vehicles

Issue

No.	Date	Description
1	9/2/22	

Project
SANTA MARIA FIELD OFFICE REPLACEMENT
2770 SANTA MARIA WAY
SANTA MARIA, CA 93455
SANTA BARBARA COUNTY

DEPT OF MOTOR VEHICLES

Supervisor	Designed	Drawn
J.ABDELSAYD	J. KELLY	J. KELLY

DSA App No. 03-121324 | SFM Permit No. 21-S-0233-CP-ER

Sheet Title
LIGHTING FIXTURE & CONTROL DEVICE SCHEDULES

Project Number DGS000000140725

Reference North | Sheet Scale NONE | Sheet Number E631

Copyright © 2022, California Department of General Services - Real Estate Services Division

CAD File: X:\Projects\14xxxx\140725\DWG\PLTE631.dwg Plot Date: Sep 02, 2022 - 2:47pm Plotted by: jkelly

RELATIVE BORDER SCALE IN INCHES 0 1 2 3

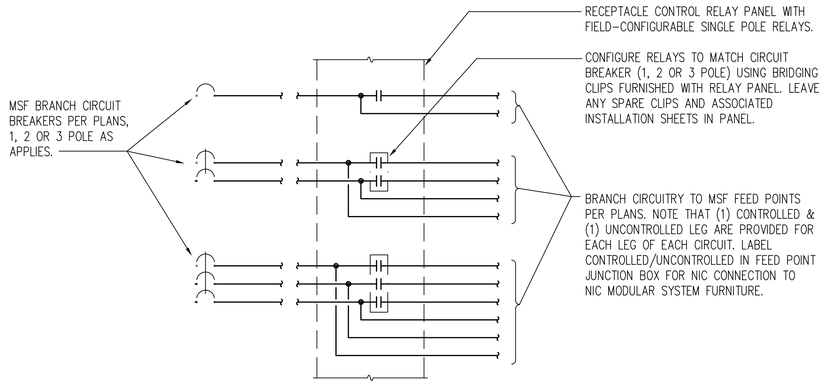

3 MSF CIRCUITS CONTROLLED BY LT'G. CONTROL SYS. NO SCALE

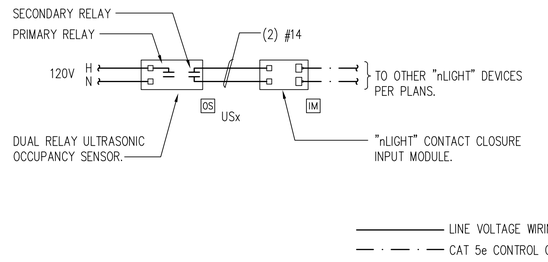

2 ULTRASONIC OCC. SENSOR/INPUT MODULE INTERFACE NO SCALE

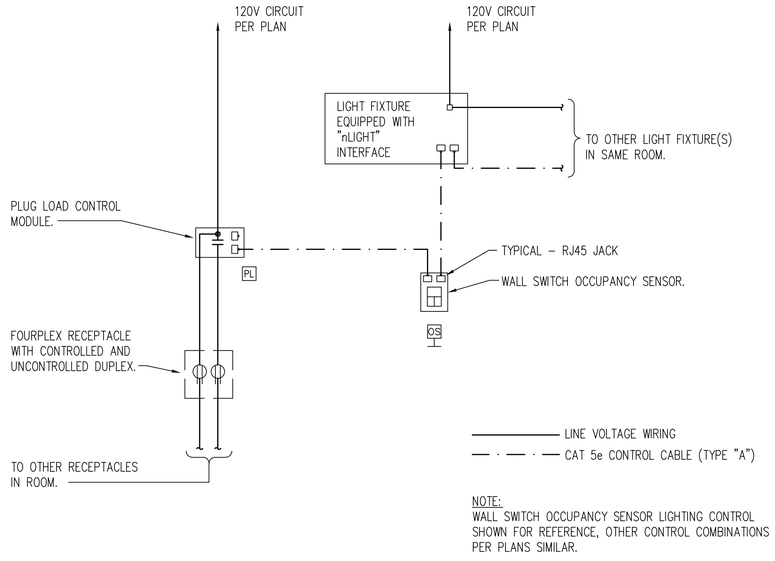

NOTE:
WALL SWITCH OCCUPANCY SENSOR LIGHTING CONTROL SHOWN FOR REFERENCE, OTHER CONTROL COMBINATIONS PER PLANS SIMILAR.

1 TYPICAL LIGHTING/RECEPTACLE CONTROL DIAGRAM NO SCALE

IDENTIFICATION STAMP
DIV. OF THE STATE ARCHITECT
APP: 03-121324 INC:
REVIEWED FOR
SS ☐ FLS ☐ ACS ☑
DATE: 09/14/2022

OFFICE OF THE STATE FIRE MARSHAL
APPROVED FIRE AND PANIC ONLY
09/07/22
21-0233
Approval of this plan does not authorize or approve any omission or deviation from applicable regulations. Final approval is subject to field inspection. One set of approved plans shall be available on the project site at all times.

DGS GENERAL SERVICES
Department of General Services
Architecture & Engineering Sections
State of California
Real Estate Services Division
Project Management & Development Branch
707 Third Street, Suite 4-105
West Sacramento, California 95605

ELECTRICAL DWGS PROGRESS SET
NOT FOR CONSTRUCTION

DMV
State of California
Department of Motor Vehicles

Issue

No.	Date	Description
1	9/2/22	

Project
SANTA MARIA FIELD OFFICE REPLACEMENT
2770 SANTA MARIA WAY
SANTA MARIA, CA 93455
SANTA BARBARA COUNTY
DEPT OF MOTOR VEHICLES

Supervisor	Designed	Drawn
J.ABDELSAYD	J.KELLY	J.KELLY

DSA App No.	SFM Permit No.
03-121324	21-S-0233-CP-ER

Sheet Title
LIGHTING DIAGRAMS AND SCHEMATICS

Project Number
DGS000000140725

Reference North
Sheet Scale
AS NOTED
Sheet Number
E632

Copyright © 2022, California Department of General Services - Real Estate Services Division

RELATIVE BORDER SCALE IN INCHES

CAD File: X:\Projects\14xxxx\140725\DWG\PLT\E632.dwg Plot Date: Jul 11, 2022 - 5:20pm Plotted by: jkelly

PROVIDE AND INSTALL FOLLOWING TELE/DATA EQUIPMENT			
QUANTITY	**MANUFACTURER**	**PART NUMBER**	**DESCRIPTION**
1	CHATSWORTH	15053-703	QUADRARACK SERVER FRAME
2	CHATSWORTH	46353-703	UNIVERSAL 2-POST DATA RACK
4	CHATSWORTH	35521-703	EVOLUTION DOUBLE SIDED VERTICAL CABLE MANAGERS
30	CHATSWORTH	35521-701	EVOLUTION HORIZONTAL CABLE MANAGERS
2	CHATSWORTH	40074-700	SINGLE-SIDED SHELF
25	CHATSWORTH	06006-201	6" CABLE MANAGEMENT STRAPS
8	PANDUIT	HLS-75R0	HOOK AND LOOP CABLE TIE (3/4" WIDE)
1	CHATSWORTH	ILT2S	CABLE TIE (100 PACK)
2	CHATSWORTH	40605-005	SCREWS, #12-24, 50 PACK, BLACK
4	CHATSWORTH	12639-001	CAGE NUTS/SCREWS, 12-24, 25 PACK
2	PANDUIT	DPFP8	SPACE FILLER PANEL (8U)
28	PANDUIT	CP24WSBL	19" MINI-COM 24 PORT ALL METAL MODULAR PATCH PANEL WITH SUPPORT BAR
50	PANDUIT	CJ588IGY	MINI-COM 5e MODULAR JACK, GRAY
50	PANDUIT	CJ588GNY	MINI-COM 5e MODULAR JACK, GREEN
100	PANDUIT	CJ588ORY	MINI-COM 5e MODULAR JACK, ORANGE
50	PANDUIT	CJ588BKY	MINI-COM 5e MODULAR JACK, BLACK
20	PANDUIT	CJ588RDY	MINI-COM 5e MODULAR JACK, RED
3	TRIPP-LITE	PDUHM15	METERED HORIZONTAL POWER DISTRIBUTION UNIT

PROVIDE AND DELIVERED TO COMMUNICATIONS ROOM 125			
QUANTITY	**COLOR**	**PART NUMBER**	**DESCRIPTION**
25	GREY	AT1501EV-GY	CAT-5e PATCH CORD, 1 FT
5	BLACK	AT1501EV-BK	CAT-5e PATCH CORD, 1 FT
5	BLACK	AT1503EV-BK	CAT-5e PATCH CORD, 3 FT
5	BLACK	AT1504EV-BK	CAT-5e PATCH CORD, 4 FT
5	BLACK	AT1505EV-BK	CAT-5e PATCH CORD, 5 FT
5	BLACK	AT1507EV-BK	CAT-5e PATCH CORD, 7 FT
25	ORANGE	AT1502EV-OR	CAT-5e PATCH CORD, 2 FT
25	ORANGE	AT1503EV-OR	CAT-5e PATCH CORD, 3 FT
25	ORANGE	AT1504EV-OR	CAT-5e PATCH CORD, 4 FT
25	GREEN	AT1502EV-GN	CAT-5e PATCH CORD, 2 FT
25	GREEN	AT1503EV-GN	CAT-5e PATCH CORD, 3 FT
25	GREEN	AT1504EV-GN	CAT-5e PATCH CORD, 4 FT
75	YELLOW	AT1503EV-YL	CAT-5e PATCH CORD, 3 FT
75	YELLOW	AT1504EV-YL	CAT-5e PATCH CORD, 4 FT
75	YELLOW	AT1505EV-YL	CAT-5e PATCH CORD, 5 FT
300	YELLOW	AT1507EV-YL	CAT-5e PATCH CORD, 7 FT
40	YELLOW	AT15010EV-YL	CAT-5e PATCH CORD, 10 FT
2	PURPLE	AT1505EV-GN	CAT-5e PATCH CORD, 5 FT
2	PURPLE	AT15010EV-GN	CAT-5e PATCH CORD, 10 FT

1 TELE/DATA EQUIPMENT SCHEDULE — NO SCALE

IDENTIFICATION STAMP
DIV. OF THE STATE ARCHITECT
APP: 03-121324 INC:
REVIEWED FOR
SS ☐ FLS ☐ ACS ☑
DATE: 09/14/2022

OFFICE OF THE STATE FIRE MARSHAL
APPROVED FIRE AND PANIC ONLY
09/07/22
21-0233
Approval of this plan does not authorize or approve any omission or deviation from applicable regulations. Final approval is subject to field inspection. One set of approved plans shall be available on the project site at all times.

DGS GENERAL SERVICES

Department of General Services
Architecture & Engineering Sections
State of California
Real Estate Services Division
Project Management & Development Branch
707 Third Street, Suite 4-105
West Sacramento, California 95605

REGISTERED PROFESSIONAL ENGINEER
JOSEPH H ABDELSAYD
No. E-18915
ELECTRICAL
STATE OF CALIFORNIA

DMV
State of California
Department of Motor Vehicles

Issue		
No.	**Date**	**Description**
1	9/2/22	

Project
SANTA MARIA FIELD OFFICE REPLACEMENT

2770 SANTA MARIA WAY
SANTA MARIA, CA 93455
SANTA BARBARA COUNTY

DEPT OF MOTOR VEHICLES

Supervisor	Designed	Drawn
J.ABDELSAYD	M. PRINCE	M. PRINCE

DSA App No.	SFM Permit No.
03-121324	21-S-0233-CP-ER

Sheet Title
CCTV & TELECOM. EQUIP. SCHEDULES

Project Number
DGS000000140725

Reference North	Sheet Scale	Sheet Number
	NONE	E641

Copyright © 2022, California Department of General Services - Real Estate Services Division

CAD File: X:\Projects\14xxxx\140725\DWG\PLTIE641.dwg Plot Date: Jul 11, 2022 - 5:20pm Plotted by: jkelly

RELATIVE BORDER SCALE IN INCHES 0 1 2 3

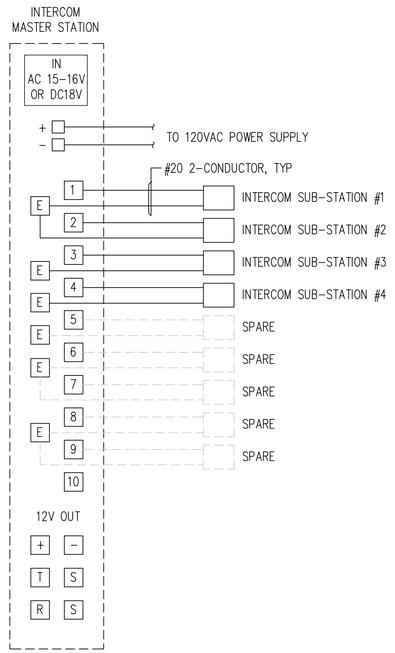

2 INTERCOM SYSTEM SCHEMATIC

NO SCALE

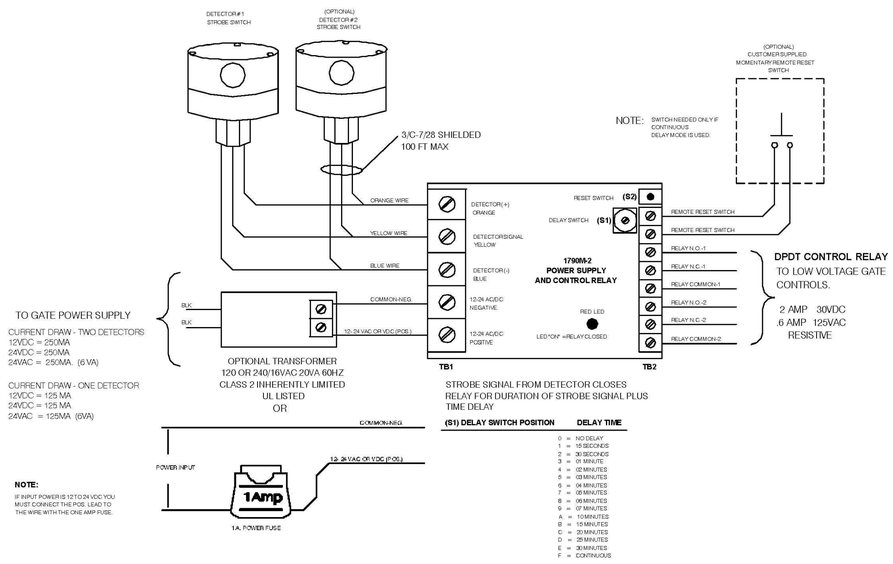

NOTE:
IF INPUT POWER IS 12 TO 24 VDC YOU MUST CONNECT THE POS. LEAD TO THE WIRE WITH THE ONE AMP FUSE.

S2 PUSHBUTTON OPERATION

The S2 pushbutton initiates press-to-test and press-to-reset functions.

If the ROTARY DELAY SWITCH is in position 'F', S2 operates as a reset switch to open the relay and end the CONTINUOUS delay after a valid signal from a detector.

If S2 is in any other position ('0' thru 'E') S2 operates as a test switch that is;
when S2 is pressed the relay will be turned on (closed) for as long as S2 is depressed and remain
closed for the delay time selected by the rotary selector switch after S2 is released. If during the delay period, S2 is depressed, the relay will opened immediately.

S2 will not function if there is a valid signal from a detector. If a valid detector signal is received
after S2 has been depressed, the test will be interrupted, and the detector signal serviced. After
the detector signal and any delay time has expired, a new test can be started by depressing S2.
PROGRAM REV. 03

3 EMERGENCY STROBE SWITCH DETECTOR SCHEMATIC

NO SCALE

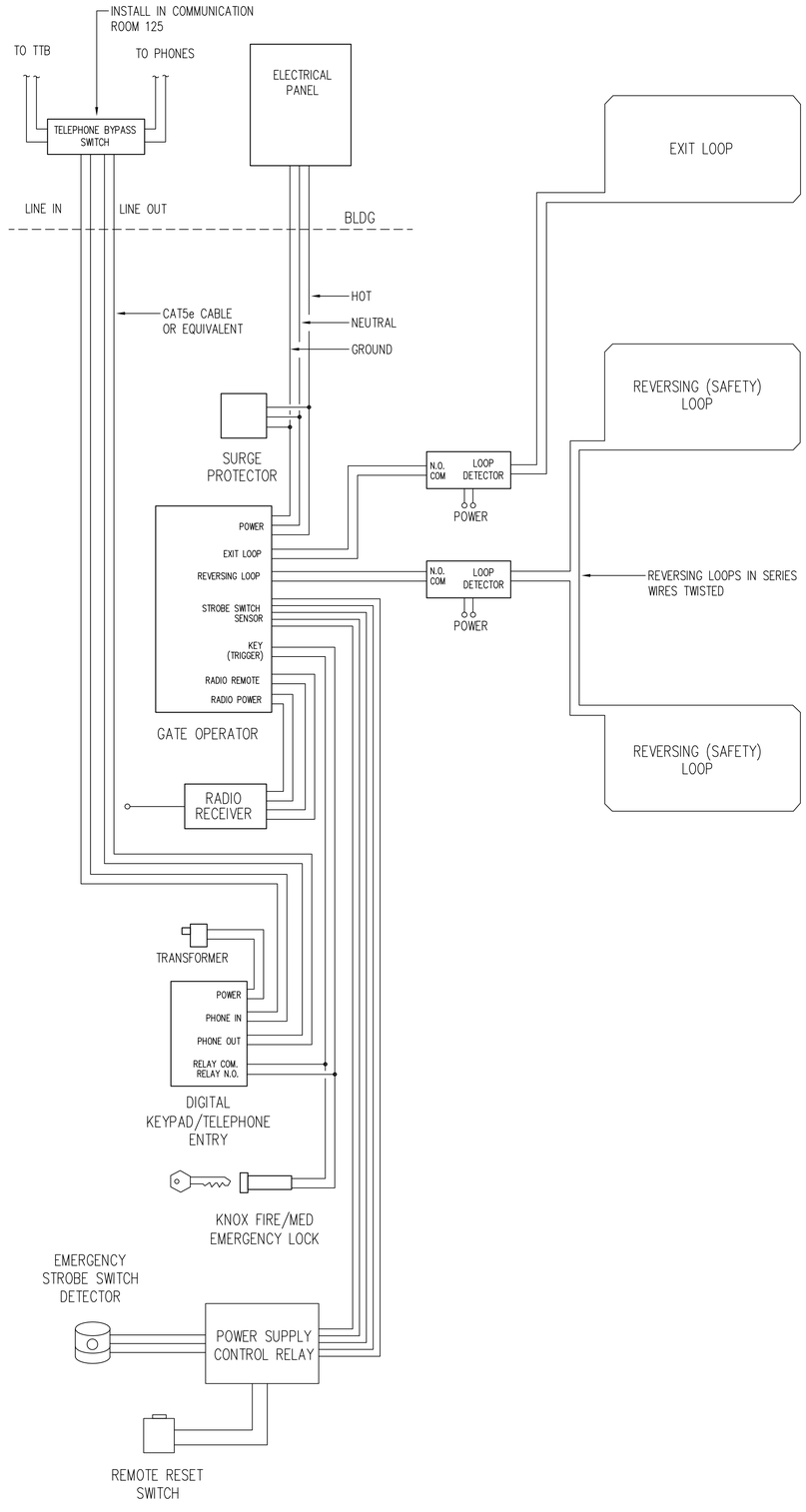

1 GATE CONTROLLER SCHEMATIC

NO SCALE

IDENTIFICATION STAMP
DIV. OF THE STATE ARCHITECT
APP: 03-121324 INC:
REVIEWED FOR
SS ☐ FLS ☐ ACS ☑
DATE: 09/14/2022

OFFICE OF THE STATE FIRE MARSHAL
APPROVED FIRE AND PANIC ONLY
09/07/22
21-0233
Approval of this plan does not authorize or approve any omission or deviation from applicable regulations. Final approval is subject to field inspection. One set of approved plans shall be available on the project site at all times.

DGS GENERAL SERVICES
Department of General Services
Architecture & Engineering Sections
State of California
Real Estate Services Division
Project Management & Development Branch
707 Third Street, Suite 4-105
West Sacramento, California 95605

REGISTERED PROFESSIONAL ENGINEER
JOSEPH H ABDELSAYED
No. E-18915
ELECTRICAL
STATE OF CALIFORNIA

DMV
State of California
Department of Motor Vehicles

Issue

No.	Date	Description
1	9/2/22	

Project
SANTA MARIA FIELD OFFICE REPLACEMENT

2770 SANTA MARIA WAY
SANTA MARIA, CA 93455
SANTA BARBARA COUNTY

DEPT OF MOTOR VEHICLES

Supervisor	Designed	Drawn
J.ABDELSAYD	M.PRINCE	M.PRINCE

DSA App No.	SFM Permit No.
03-121324	21-S-0233-CP-ER

Sheet Title
LOW VOLTAGE SCHEMATICS

Project Number
DGS000000140725

Reference North

Sheet Scale
AS NOTED

Sheet Number
E642

© Copyright 2022, California Department of General Services - Real Estate Services Division

CAD File: X:\Projects\14xxxx\140725\DWG\PLTE642.dwg Plot Date: Jul 11, 2022 - 5:21pm Plotted by: jkelly

RELATIVE BORDER SCALE IN INCHES 0 1 2 3

FIRE ALARM SYSTEM MATERIAL LIST

SYMBOL	DESCRIPTION	BACKBOX* MOUNTING	BACKBOX* SIZE* WxHxD	BACKBOX* TRIM RING*
FACP	FIRE ALARM CONTROL PANEL DIGITAL ALARM COMM. TRANSMITTER FIBER-OPTIC LINE DRIVER MODULE NETWORK REPEATER CARD 12VDC/18AH BATTERY, AS NEEDED	SURFACE	14.5"x20.125"x4.5"	N/A
FAA	REMOTE ANNUCIATOR	SURFACE	8-3/4"x10"x3"	N/A
	FIRE/SMOKE DAMPER (PROVIDED BY MECH.)	SURFACE	4" SQR. DEEP	N/A
P	ADDRESSABLE PHOTOELECTRIC SMOKE DETECTOR LOW PROFILE DETECTOR BASE	FLUSH	4" SQR. DEEP	3-1/2" OCT.
	ADDRESSABLE HEAT DETECTOR, FIXED 135° F LOW PROFILE DETECTOR BASE	FLUSH	4" SQR. DEEP	3-1/2" OCT.
	DEVICE PROVIDED BY HVAC MANUFACTURER, FA CABLING AND CONNECTION ONLY	N/A	N/A	N/A
P	MANUAL PULL STATION	FLUSH	4" SQR. DEEP	1-GANG
	ADDRESSABLE CONTROL RELAY MODULE (DH)	FLUSH	4" SQR. DEEP	1-GANG
	MULTI-CANDELA HORN/STROBE (WALL) RED	FLUSH	4" SQR. DEEP	1-GANG
	MULTI-CANDELA VISUAL STROBE (WALL) RED	FLUSH	4" SQR. DEEP	1-GANG
	MULTI-CANDELA HORN/STROBE (CEILING) RED	FLUSH	4" SQR. DEEP	1-GANG
	MULTI-CANDELA VISUAL STROBE (CEILING) RED	FLUSH	4" SQR. DEEP	1-GANG
	INDOOR HORN - RED	FLUSH	4" SQR. DEEP	1-GANG
V	EXTERIOR BELL (WALL) RED	SURFACE	4" SQR. DEEP	N/A
WP	WEATHERPROOF HORN (WALL) RED WEATHERPROOF BOX - RED	SURFACE	4" SQR. DEEP	N/A
	WATER FLOW DETECTOR W/TAMPER SWITCH	N/A	N/A	N/A
PIV		N/A	N/A	N/A
KB	KNOX BOX	N/A	N/A	N/A

1. ALL REQUIRED BACKBOXES, TRIM RINGS, ENCLOSURES, COVER PLATES, ETC. ARE TO BE PROVIDED AND INSTALLED BY ELECTRICAL CONTRACTOR UNLESS SPECIFICALLY NOTED OTHERWISE.
2. NEW FIRE ALARM SYSTEM/DEVICES SHALL BE COMPATIBLE WITH EXISTING SIMPLEX FIRE ALARM SYSTEM.
3. COMPLETED DEFERRED FIRE ALARM PLANS SHALL BE APPROVED BY THE PROJECT ENGINEER PRIOR TO SFM SUBMISSION.

1 FIRE ALARM SYSTEMS MATERIAL LIST — NO SCALE

FIRE ALARM OPERATION MATRIX

	ANNUNCIATE CONDITION AT MAIN FIRE ALARM CONTROL PANEL	ANNUNCIATE CONDITION AT FIRE ALARM GRAPHIC ANNUNCIATOR	ANNUNCIATE CONDITION AT GUARD FIRE ALARM ANNUNCIATOR	ANNUNCIATE CONDITION AT FIREMAN'S FAN/DAMPER CONTROL PANEL	ANNUNCIATE ON CRT	ANNUNCIATE ON PRINTER	SEND SIGNAL TO CENTRAL MONITORING STATION	ACTIVATE SPEAKER/STROBE UNITS FLOOR ABOVE, FLOOR BELOW, LEVEL OF ALARM * (**)	SHUT DOWN ASSOCIATED AHU	UNLOCK STAIRWELL DOORS & ALL CARD-KEY CONTROLLED MAIN ENTRANCE DOORS	RELEASE ALL DOOR HOLDS	RECALL ELEVATOR TO GROUND FLOOR	RECALL ELEVATOR TO SECOND FLOOR	INITIATE HVAC, CONTROL SEQUENCE VIA RS-232 COMMUNICATIONS	
ALARM															
MANUAL PULL STATION	X	X	X		X	X	X	X		X	X			X	
AREA SMOKE DETECTORS	X	X	X		X	X	X	X		X	X	X		X	
ELEVATOR LOBBY, MACHINE ROOM, SHAFT DETECTORS	X	X	X		X	X	X	X		X	X		X	X	
FIRST FLOOR ELEVATOR LOBBY DETECTORS	X	X	X		X	X	X	X		X	X			X	
ANY TWO (2) ATRIUM SMOKE DETECTORS	X	X	X		X	X	X	X	X	X	X			X	
DUCT DETECTORS	X	X	X		X	X	X	X		X	X			X	
WATERFLOW SWITCH	X	X	X		X	X	X	X		X	X			X	
ATRIUM WATERFLOW SWITCH	X	X	X		X	X	X								
TROUBLE															
SYSTEM TROUBLE	X	X	X		X	X	X								
SUPERVISORY															
FIRE PUMP RUNNING	X	X		X	X	X	X								
FIRE PUMP TROUBLE	X			X	X	X	X								
FIRE PUMP OFF	X			X											
FUEL LEVEL LOW	X			X	X	X	X								
FUEL LEVEL NORMAL	X			X											
GENERATOR TROUBLE	X	X		X	X	X	X								
GENERATOR RUNNING	X	X		X	X	X	X								
TRANSFER SWITCH OFF	X			X	X	X	X								
GENERATOR READY	X														

2 FIRE ALARM OPERATION MATRIX — NO SCALE

IDENTIFICATION STAMP
DIV. OF THE STATE ARCHITECT
APP: 03-121324 INC:
REVIEWED FOR
SS ☐ FLS ☐ ACS ☑
DATE: 09/14/2022

OFFICE OF THE STATE FIRE MARSHAL
APPROVED FIRE AND PANIC ONLY
09/07/22
21-0233
Approval of this plan does not authorize or approve any omission or deviation from applicable regulations. Final approval is subject to field inspection. One set of approved plans shall be available on the project site at all times.

DGS GENERAL SERVICES
Department of General Services
Architecture & Engineering Sections
State of California
Real Estate Services Division
Project Management & Development Branch
707 Third Street, Suite 4-105
West Sacramento, California 95605

REGISTERED PROFESSIONAL ENGINEER
JOSEPH H ABDELSAYD
No. E-18915
ELECTRICAL
STATE OF CALIFORNIA

DMV
State of California
Department of Motor Vehicles

Issue No.	Date	Description
1	9/2/22	

Project
SANTA MARIA FIELD OFFICE REPLACEMENT
2770 SANTA MARIA WAY
SANTA MARIA, CA 93455
SANTA BARBARA COUNTY

DEPT OF MOTOR VEHICLES

Supervisor	Designed	Drawn
J.ABDELSAYD	M. PRINCE	M. PRINCE

DSA App No.	SFM Permit No.
03-121324	21-S-0233-CP-ER

Sheet Title
FIRE ALARM LEGEND AND SEQUENCE OF OPERATIONS

Project Number
DGS000000140725

Reference North
Sheet Scale: AS NOTED
Sheet Number: FA001

Copyright © 2022, California Department of General Services - Real Estate Services Division

CAD File: X:\Projects\14xxxx\140725\DWG\PLT\FA001.dwg Plot Date: Jul 11, 2022 - 5:21pm Plotted by: jkelly

RELATIVE BORDER SCALE IN INCHES 0 1 2 3

A

A	AMPERES
AC	ALTERNATING CURRENT OR ASPHALT CONCRETE
A/C	IR CONDITIONING
AFCI	ARC FAULT CIRCUIT INTERRUPTER
AFF	ABOVE FINISHED FLOOR
AI	ANALOG INPUT
AL	ALARM LIGHT
AO	ANALOG OUTPUT
AR	ALARM RESET
ATS	AUTOMATIC TRANSFER SWITCH
AVC	AIR VOLUME CONTROLLER

B

BC	BARE COPPER
BD	BUILDING DISCONNECT
BLDG	BUILDING
BP	BOOSTER PUMP
BRK	BREAKER

C

C	CONDUIT
CAT	CATEGORY
CB	CIRCUIT BREAKER
CCTV	CLOSED CIRCUIT TELEVISION
CD	CONTROL DISCONNECT
CKT	CIRCUIT
CL	CHAIN LINK
CLR	CLEAR/CLEARANCE
COMM	COMMUNICATION
CR	CONTROL RELAY
CS	CURRENT SWITCH
CT	CURRENT TRANSFORMER

D

DC	DIRECT CURRENT
DI	DIGITAL INPUT
DIA	DIAMETER
DMM	DIGITAL MULTIMETER
DO	DIGITAL OUTPUT
DP	DUPLEX PLUG RECEPTACLE
DS	DOOR SWITCH

E

(E)	EXISTING
EF	EXHAUST FAN
ELEV	ELEVATION

F

F	FUSE
FG	FINISH GRADE
FL	FAILURE LIGHT
FLA	FULL LOAD AMPERES
FLEX	FLEXIBLE CONDUIT
FLS	FLOW SWITCH
FO	FIBER OPTIC
FR	FAILURE RESET/FLAME RESISTANT
FS	FLOAT SWITCH

G

GA	GAUGE
GB	GROUND BAR
GFCI	GROUND FAULT CIRCUIT INTERRUPTER
GND	GROUND
GRS	GALVANIZED RIGID STEEL

H

HP	HORSEPOWER
HPS	HIGH PRESSURE SODIUM

I

IC	IRRIGATION CONTROLLER
ICC	IRRIGATION CONTROLLER CABINET
IR	INDUCTION RELAY
ISR	INTRINSICALLY SAFE RELAY

J

J-BOX	JUNCTION BOX

K

KV	KILOVOLT
KVA	KILOVOLT AMPERES
KW	KILOWATT

L

L	LIGHT/LENGTH
LC	LIGHTING CONTACTOR
LCD	LIQUID CRYSTAL DISPLAY
LCP	LIGHTING CONTROL PANEL
LD	LIGHTING DISCONNECT
LED	LIGHT EMITTING DIODE
LL	LIQUID LEVEL RELAY
LLC	LIQUID LEVEL CONTROLLER
LP	LIGHT PANEL
LS	LIGHT SWITCH
LT	LIGHT TRANSFORMER
LTO	LIGHT TRANSFORMER OVERLOAD

M

MAX	MAXIMUM
MB	MAIN BREAKER
MC	METALLIC CONDUIT
MCA	MINIMUM CIRCUIT AMPACITY
MCP	MOTOR CIRCUIT PROTECTOR
MCC	MOTOR CONTROL CENTER
MD	MOTOR DISCONNECT
MH	MOUNTING HEIGHT
MIN	MINIMUM
MISC	MISCELLANEOUS
MSB	MAIN SWITCHBOARD
MT	EMPTY CONDUIT

N

(N)	NEW
NB	NEUTRAL BUS
NC	NORMALLY CLOSED
NO.	NUMBER
NOS.	NUMBERS
NO	NORMALLY OPEN
NSW	NEUTRAL SWITCHING BREAKER

O

O/C	ON CENTER
OG	ORIGINAL GROUND
OH	OVERHEAD
OL	OVERLOAD

P

P	POLE (CIRCUIT BREAKER)
PB	PULL BOX OR PUSHBUTTON
PCP	PUMP CONTROL PANEL
PD	PUMP DISCONNECT
PEC	PHOTOELECTRIC CONTROL
PFR	PHASE FAILURE RELAY
PFRD	PHASE FAILURE RELAY DISCONNECT
PL	PILOT LIGHT
PS	PRESSURE SWITCH
PTS	POWER TRANSFER SWITCH
PV	PHOTOVOLTAIC
PVC	POLYVINYL CHLORIDE

R

RES	RESISTOR
RSC	RIGID STEEL CONDUIT
RTB	RADIO TERMINAL BOARD

S

S	STARTER COIL
SCH	SCHEDULE
SD	SERVICE DISCONNECT
SEC	SECONDS
SFR	SEAL FAILURE RELAY
SPD	SPARE DISCONNECT
SPR	STANDBY POWER RECEPTACLE
SQ	SQUARE
SS	SELECTOR SWITCH
ST	STARTER
STD	STANDARD
SV	SOLENOID VALVE

T

TB	TERMINAL BLOCK
TC	TELEPHONE CABLE
TDR	TIME DELAY RELAY
TGB	TELECOMMUNICATIONS GROUND BUS BAR
TGLS	TOGGLE SWITCH
TM	TIME METER
TMGB	TELECOMMUNICATIONS MAIN GROUND BUS BAR
TOT	TOTAL
TS	TIMER SWITCH
TSW	TEST SWITCH
TTB	TELEPHONE TERMINAL BOARD
TYP	TYPICAL

U

UON	UNLESS OTHERWISE NOTED
UPS	UNINTERRUPTIBLE POWER SUPPLY

V

V	VOLT(S)
VAR	VARIABLE/VARIES

W

W	WATT/WIDTH
WLS	WATER LEVEL SWITCH
WP	WEATHERPROOF

X

XFMR	TRANSFORMER

1 ABBREVIATIONS — NO SCALE

1. THERE MUST BE AT LEAST 6" OF LEAD WIRE FROM THE BOX TO THE DEVICE. ALL SPLICES TO BE MADE IN AN ACCESSIBLE JUNCTION BOX. DO NOT SPLICE THE WIRE INSIDE WIREWAYS.
2. ALL CONDUIT, BOXES AND CONNECTORS ARE TO BE SUPPLIED AND INSTALLED BY THE CONTRACTOR. CONDUIT TYPE IS TO BE ELECTRO-METALLIC TUBING SUPPORTED EVERY 10 FEET AND WITHIN 3 FEET OF EACH OUTLET BOX, JUNCTION BOX, DEVICE BOX, CABINET, CONDUIT BODY, OR OTHER TUBING TERMINATIONS. FLEX CONDUIT TO BE SUPPORTED EVERY FOUR FEET AND WITHIN 12 INCHES OF EACH OUTLET BOX, JUNCTION BOX, DEVICE BOX, CABINET, CONDUIT, BODY OR OTHER TUBING TERMINATIONS. ALL CONDUIT SHALL BE 1/2" MINIMUM, UNLESS OTHERWISE NOTED. ALL OTHER RUNS ARE FIRE CABLE.
3. WIRING SHALL NOT BE LOOPED THROUGH DEVICES, WIRE MUST BE CUT FOR IN AND OUT.
4. ANY DEVIATIONS FROM THE PLANS WHICH ARE NECESSITATED BY FIELD CONDITIONS OR ANY FIELD CONDITIONS DIFFERENT FROM THOSE INDICATED ON THE PLANS, SHALL BE CALLED TO THE ATTENTION OF THE ARCHITECT AND PROJECT MANAGER, AT ONCE, AND SUBMITTED TO STATE AND FIRE MARSHAL IN WRITING FOR APPROVAL.
5. REFERENCE TO ANY DETAIL OR DRAWING IS FOR CONVENIENCE ONLY AND DOES NOT LIMIT THE APPLICATION OF SUCH DRAWING OR DETAILS.
6. ALL WIRE AND CABLES SHALL BE CONTINUOUS AND FREE OF GROUNDS, AND ROUTED WITHIN CONDUITS.
7. DEVICE LOCATIONS ARE SHOWN DIAGRAMMATICALLY. EXACT LOCATION OF ALL EQUIPMENT TO BE DETERMINED IN THE FIELD.
8. INSTALLERS ARE REQUIRED TO USE COLOR CODED WIRES OR WIRE NUMBERS.
9. FIRE SIGNALING CIRCUITS SHALL BE IDENTIFIED AT TERMINAL AND JUNCTION LOCATIONS.
10. LOCATE STROBE LIGHTS 80" TO 96" A.F.F. TO THE TOP OF LENS, OR 6" BELOW CEILING, (WHICH EVER IS LOWER).
11. MAINTAIN FIRE ALARM DURING CONSTRUCTION. PROVIDE 24 HR. FIRE WATCH WHEN THE ALARM IS SHUT DOWN.

CONDUIT AND CONDUCTORS:

1. FIRE ALARM SYSTEM WIRING SHALL BE INSTALLED IN CONDUITS CONFORMING TO THE REQUIREMENTS OF "RACEWAYS AND BOXES FOR ELECTRICAL SYSTEMS" ELSEWHERE IN THESE SPECIAL PROVISIONS. CONDUCIT SIZE SHALL BE AS RECOMMENDED BY THE FIRE ALARM SYSTEM MANUFACTURERS EXCEPT THAT CONDUIT SHALL NOT BE LESS THAN 1/2-INCH DIAMETER, TRADE SIZE. WITHIN THE OFFICE AREAS AND ROOMS WITH FINISHED CEILING AND FURRED WALL, CONDUITS SHALL BE CONCEALED IN CEILING OR WALLS. ALL OTHER CONDUITS SHALL BE EXPOSED CONDUIT.
2. CONDUCTORS AND CABLES FOR THE FIRE ALARM SYSTEM SHALL BE AS REQUIRED BY THE FIRE ALARM SYSTEM MANUFACTURER.
3. NO WIRING OTHER THAN THAT DIRECTLY ASSOCIATED WITH FIRE ALARM DETECTION SYSTEM SHALL BE PREMITTED IN THESE CONDUITS. WIRING SPLICES SHALL BE AVOIDED TO THE EXTENT POSSIBLE AND IF NEEDED, THEY SHALL BE MADE ON IN JUNCTION BOXES AND SHALL BE CONNECTED WITH CRIMP-TYPE CONNECTORS. WIRE NUT-TYPE CONNECTORS ARE NOT ACCEPTABLE.
4. ALL CONDUITS ENTERING OR LEAVING THE TERMINAL CABINETS AND JUNCTION BOXES SHALL BE NUMBERED IN A LOGICAL AND CONSECUTIVE MANNER. A NUMBER SHALL BE USED ONLY ONCE.
5. ALL CONDUCTORS SHALL BE TAGGED, LABELED, AND COLOR-CODED. COLOR-CODING SHALL BE BY WIRE INSULATION, NOT TAPING OR BANDING. THE NUMBERING AND COLOR-CODING SHALL BE CONTINUOUS FOR EACH CIRCUIT WIRE.
6. WIRE SHALL BE NUMBERED AT EACH CONNECTION, TERMINATION, AND JUNCTION POINT. EACH GROUP OF WIRES SHALL BE TAGGED WITH ITS DESTINATION AT EACH PANEL, TERMINAL BOX, OR JUNCTION BOX. IDENTIFICATION SHALL BE MADE WITH ONE OF THE FOLLOWING:
   A. ADHESIVE BACK PAPER OR COTH WRAP-AROUND MARKERS WITH CLEAR, HEAT SHRINKABLE TUBING SEALED OVER EITHER THYPE OF MARKER.
   B. PRE-PRINTED, WHITE, HEAT-SHRINKABLE TUBING.

GENERAL NOTES:

1. THE FIRE ALARM SYSTEM SHALL CONFORM TO ARTICLE 760 OF THE 2019 CALIFORNIA ELECTRICAL CODE.
2. UPON COMPLETION OF FIRE ALARM SYSTEM, A SATISFACTORY TEST OF THE ENTIRE SYSTEM SHALL BE MADE IN THE PRESENCE OF THE STATE FIRE MARSHAL AND STATE REPRESENTATIVE.
3. A STAMP SET OF APPROVED FIRE ALARM PLANS SHALL BE ON THE JOB SITE AND USED FOR INSTALLATION. ANY DEVIATION FROM APPROVED PLANS, INCLUDING THE SUBSTITUTION OF DEVICES, SHALL BE APPROVED BY THE FIRE MARSHAL.
4. ANY DISCREPANCIES BETWEEN THE DRAWINGS AND THE CODE OR RECOGNIZED STANDARDS SHALL BE BROUGHT TO THE ATTENTION OF THE INSPECTOR OF RECORD.
5. ALL DEVICES OF THE FIRE ALARM SYSTEM SHALL BE APPROVED AND LISTED BY THE CALIFORNIA STATE FIRE MARSHAL.
6. A CERTIFICATE OF COMPLETION SHALL BE PREPARED BY THE INSTALLER AND GIVEN TO THE STATE FIRE MARSHAL, UPON COMPLETION OF THE INSTALLATION.
7. COVERAGE WILL BE DETERMINED BY THE FIELD FIRE MARSHAL. FOR INSPECTION AND/OR TESTING, THE STATE FIRE MARSHAL SHALL BE NOTIFIED FOR SCHEDULING AN APPOINTMENT.
8. THE FIRE ALARM SYSTEM SHALL CONFORM TO THE 2019 CALIFORNIA ELECTRICAL CODE (CEC) ARTICLE 760 AND THE 2019 CALIFORNIA FIRE CODE (CFC) 105.7 & 907, AND CALIFORNIA BUILDING CODE (CBC) 907.
9. INSTALLATION OF THE FIRE ALARM SYSTEM SHALL NOT START UNTIL DETAILS PLANS AND SPECIFICATIONS, INCLUDING CALIFORNIA STATE FIRE MARSHAL LISTING NUMBERS FOR EACH COMPONENT OF THE SYSTEM, HAVE BEEN APPROVED BY THE CALIFORNIA STATE FIRE MARSHAL.
10. THE STROBE FLASH RATE SHALL NOT EXCEED TWO FLASHES PER SECOND (2 Hz) NOR BE LESS THAN ONE FLASH EVERY SECOND (1 Hz) THROUGHOUT THE LISTED VOLTAGE RANGE OF THE APPLIANCE, (2016 NFPA 72 SECTION 18.5.3.1).

2 FIRE ALARM GENERAL NOTES — NO SCALE

1. ALL WORK AND MATERIALS SHALL COMPLY WITH THE 2019 REGULATIONS OF THE STATE FIRE MARSHAL, CALIFORNIA CODE OF REGULATIONS, SERVING UTILITY COMPANIES, AND OTHER APPLICABLE STATE ORDINANCES. NOTHING IN THESE PLANS OR SPECIFICATIONS IS TO BE CONSTRUED AS TO PERMIT WORK NOT CONFORMING TO THESE CODES. WHERE WORK OF A HIGHER DEGREE IS INDICATED IN THE PLANS OR SPECIFICATIONS THIS REQUIREMENT SHALL GOVERN.
2. THE FIRE ALARM SYSTEM IS INDICATED AS A 'DEFERRED APPROVAL SYSTEM'. THE CONTRACTOR SHALL PROVIDE SHOP DRAWINGS TO THE STATE REPRESENTATIVE FOR REVIEW, WHICH SHALL INCLUDE: BUILDING FLOOR PLAN WITH COMPONENT LAYOUT AND WIRING LAYOUT, INCLUDING CONDUIT AND WIRE SIZES, DRAWINGS SHALL SHOW THE SHAPE, SIZE, AND METHOD OF ATTACHMENT FOR EACH COMPONENT USED, WIRING DIAGRAMS SHALL INCLUDE ROUGH-IN DIMENSIONS, COMPONENT LAYOUT AND WIRE NUMBER IDENTIFICATION, MANUFACTURER'S CATALOG CUT SHEETS AND CSFM LISTING FOR INDIVIDUAL COMPONENTS COMPRISING THE FIRE ALARM SYSTEM, BATTERYLOAD CALCULATIONS, AND VOLTAGE DROP CALCULATIONS FOR EACH SIGNALING CIRCUIT. DRAWINGS SHALL BE APPROVED BY THE STATE FIRE MARSHAL PRIOR TO INSTALLATION.
3. STATE FIRE MARSHAL APPROVAL: PRIOR TO THE SUBMITTAL OF THE WORKING DRAWINGS, THE CONTRACTOR SHALL HAVE SAID DRAWINGS STAMPED "APPROVED" BY THE STATE FIRE MARSHAL. THE CONTRACTOR SHALL RESUBMIT WORKING DRAWINGS TO THE STATE FIRE MARSHAL AS NEEDED UNTIL APPROVED. NO ADDITIONAL PAYMENT WILL BE MADE FOR RESUBMITTALS. SUBMITTALS SHALL BE APPROVED BY THE STATE FIRE MARSHAL AND ENGINEER PRIOR TO COMMENCING WORK WITH THE FIRE ALARM SYSTEM INSTALLATION.
4. UPON COMPLETION OF THE INSTALLATION OF THE FIRE PROTECTIVE SIGNALING EQUIPMENT, A SATISFACTORY TEST OF THE ENTIRE SYSTEM SHALL BE MADE IN THE PRESENCE OF THE ENFORCING FIRE AGENCY (EFD) CHAPTER 14, 2016 NFPA 72. A CERTIFICATE OF COMPLETION SHALL BE PROVIDED TO THE STATE REPRESENTATIVE PER SEC. 10.18.1.4, 2016 NFPA 72, AND THE 2019 CALIFORNIA FIRE CODE, SECTION 907.8.2.
5. FIRE ALARM DEVICES SHOWN ARE FOR STATE PLAN REVIEW ONLY AND DOES NOT CONSTITUTE THE COMPLETE SET OF FIRE ALARM DRAWINGS. THE COMPLETE SET OF FIRE ALARM DRAWINGS SHALL BE SUBMITTED TO THE STATE FIRE MARSHAL BY THE LOW VOLTAGE CONTRACTOR AND APPROVAL OBTAINED PRIOR TO INSTALLATION OF THE FIRE ALARM SYSTEM.
6. A COPY OF ALL FIRE MARSHAL APPROVED FIRE ALARM PLANS SHALL BE PROVIDED TO THE STATE ELECTRICAL ENGINEER FOR BUILDING RECORDS UPON COMPLETION OF PROJECT.

3 STATE FIRE MARSHAL FIRE ALARM DEFERRED APPROVAL NOTES — NO SCALE

IDENTIFICATION STAMP
DIV. OF THE STATE ARCHITECT
APP: 03-121324 INC:
REVIEWED FOR
SS ☐ FLS ☐ ACS ☑
DATE: 09/14/2022

OFFICE OF THE STATE FIRE MARSHAL
APPROVED FIRE AND PANIC ONLY
09/07/22
21-0233
Approval of this plan does not authorize or approve any omission or deviation from applicable regulations. Final approval is subject to field inspection. One set of approved plans shall be available on the project site at all times.

DGS GENERAL SERVICES

Department of General Services
Architecture & Engineering Sections
State of California
Real Estate Services Division
Project Management & Development Branch
707 Third Street, Suite 4-105
West Sacramento, California 95605

REGISTERED PROFESSIONAL ENGINEER
JOSEPH H ABDELSAYD
No. E-18915
ELECTRICAL
STATE OF CALIFORNIA

DMV
State of California
Department of Motor Vehicles

Issue

No.	Date	Description
1	9/2/22	

Project
SANTA MARIA FIELD OFFICE REPLACEMENT

2770 SANTA MARIA WAY
SANTA MARIA, CA 93455
SANTA BARBARA COUNTY

DEPT OF MOTOR VEHICLES

Supervisor	Designed	Drawn
J.ABDELSAYD	M. PRINCE	M. PRINCE

DSA App No.	SFM Permit No.
03-121324	21-S-0233-CP-ER

Sheet Title
FIRE ALARM ABBREVIATIONS AND NOTES

Project Number
DGS000000140725

Reference North | Sheet Scale: AS NOTED | Sheet Number: FA011

Copyright © 2022, California Department of General Services - Real Estate Services Division

CAD File: X:\Projects\14xxxx\140725\DWG\PLTFA011.dwg Plot Date: Jul 11, 2022 - 5:21pm Plotted by: jkelly

RELATIVE BORDER SCALE IN INCHES 0 1 2 3

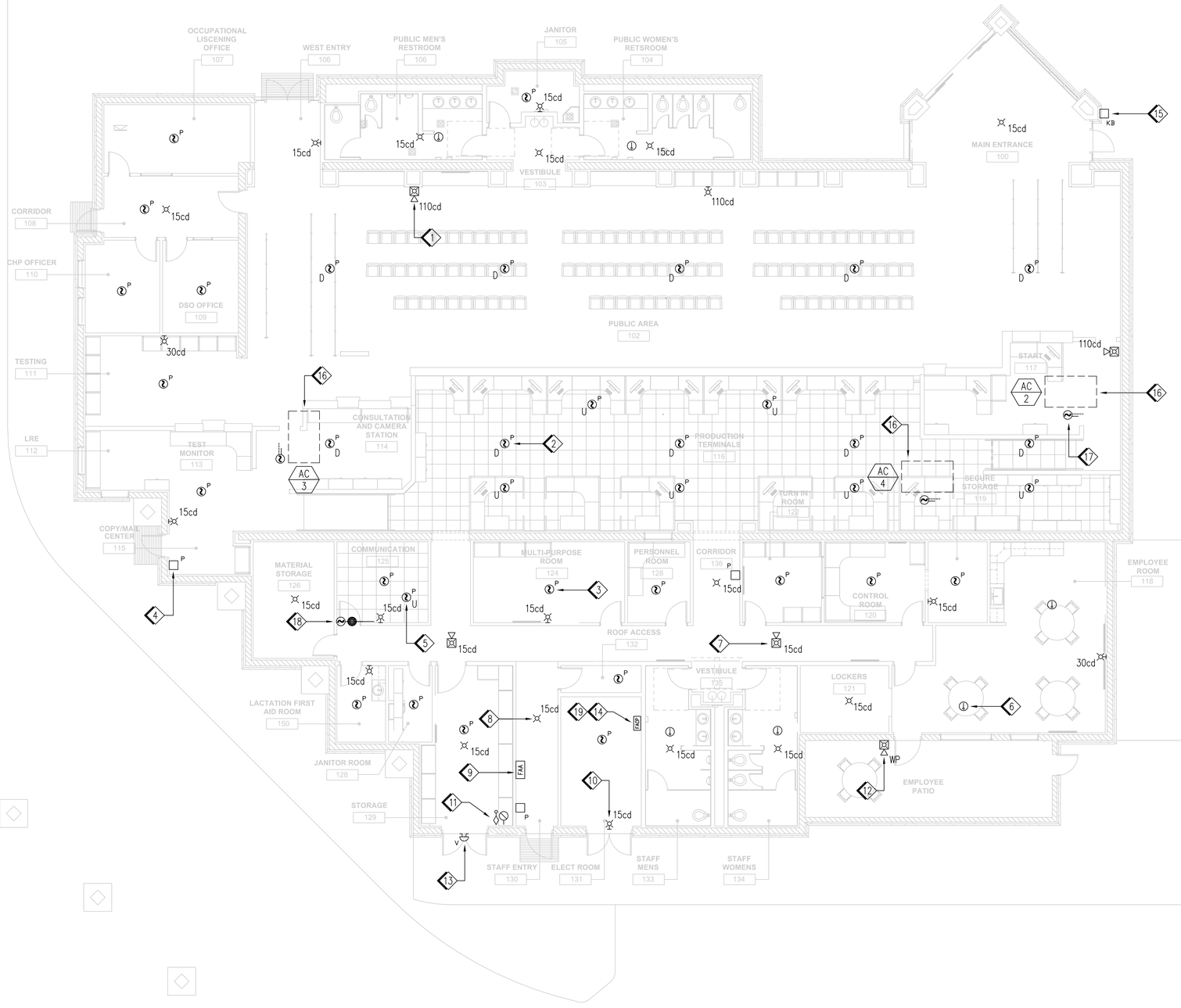

1 FLOOR PLAN - FIRE ALARM — 1/8"=1'-0"

1. WALL MOUNTED FIRE ALARM HORN/STROBE, TYPICAL.
2. FIRE ALARM PHOTOELECTRONIC SMOKE DETECTOR ATTACHED TO OPEN STRUCTURE, TYPICAL.
3. CEILING MOUNTED FIRE ALARM PHOTOELECTRONIC SMOKE DETECTOR, TYPICAL.
4. WALL MOUNTED MANUAL FIRE ALARM STATION, TYPICAL.
5. FIRE ALARM PHOTOELECTRONIC SMOKE DETECTOR INSTALLED BELOW RAISED FLOOR, TYPICAL.
6. CEILING MOUNTED FIRE ALARM HEAT DETECTOR, TYPICAL.
7. CEILING MOUNTED FIRE ALARM HORN/STROBE, TYPICAL.
8. CEILING MOUNTED FIRE ALARM VISUAL STROBE, TYPICAL.
9. WALL MOUNTED FIRE ALARM REMOTE ANNUNCIATOR.
10. WALL MOUNTED FIRE ALARM VISUAL STROBE, TYPICAL.
11. FIRE ALARM TAMPER/FLOW SWITCHES, NEMA 4 RATED ENCLOSURE.
12. WALL MOUNTED FIRE ALARM EXTERIOR HORN, UL LISTED.
13. WALL MOUNTED HIGH DECIBEL FIRE ALARM EXTERIOR BELL, 24VDC MOTOR DRIVEN, WITH WEATHER-PROOF BACK BOX, 8" GONG DIAMETER.
14. WALL MOUNTED SMALL ADDRESSABLE FIRE ALARM CONTROL PANEL.
15. EXTERIOR MOUNTED KNOX BOX WITH TAMPER SWITCH CONNECTION TO FIRE ALARM CONTROL PANEL.
16. MECHANICAL UNIT LOCATED ON ROOF, SEE 1/M141.
17. DUCT SMOKE DETECTOR. COORDINATE EXACT LOCATION WITH MECHANICAL EQUIPMENT, TYPICAL. SEE 1/M141.
18. 24-VOLT FIRE/SMOKE DAMPER. COORDINATE EXACT LOCATION WITH MECHANICAL PLANS, SEE 1/M141.
19. INSTALL CONDUIT SEALS PER F/C708 ON ALL CONDUITS EXITING PANELS, EQUIPMENT, ETC. AND ROUTING UNDERGROUND, TYPICAL.

2 KEYED NOTES — NO SCALE

IDENTIFICATION STAMP
DIV. OF THE STATE ARCHITECT
APP: 03-121324 INC:
REVIEWED FOR
SS ☐ FLS ☐ ACS ☑
DATE: 09/14/2022

OFFICE OF THE STATE FIRE MARSHAL
APPROVED FIRE AND PANIC ONLY
09/07/22
21-0233
Approval of this plan does not authorize or approve any omission or deviation from applicable regulations. Final approval is subject to field inspection. One set of approved plans shall be available on the project site at all times.

DGS GENERAL SERVICES
Department of General Services
Architecture & Engineering Sections
State of California
Real Estate Services Division
Project Management & Development Branch
707 Third Street, Suite 4-105
West Sacramento, California 95605

REGISTERED PROFESSIONAL ENGINEER
JOSEPH H ABDELSAYD
No. E-18915
ELECTRICAL
STATE OF CALIFORNIA

DMV
State of California
Department of Motor Vehicles

Issue

No.	Date	Description
1	9/2/22	

Project
SANTA MARIA FIELD OFFICE REPLACEMENT
2770 SANTA MARIA WAY
SANTA MARIA, CA 93455
SANTA BARBARA COUNTY
DEPT OF MOTOR VEHICLES

Supervisor	Designed	Drawn
J.ABDELSAYD	M. PRINCE	M. PRINCE

DSA App No. 03-121324
SFM Permit No. 21-S-0233-CP-ER

Sheet Title
FIRE ALARM PLAN

Project Number
DGS000000140725

Reference North
Sheet Scale 1/8"=1'-0"
Sheet Number FA121

Copyright © 2022, California Department of General Services - Real Estate Services Division

CAD File: X:\Projects\14xxxx\140725\DWG\PLTFA121.dwg Plot Date: Jul 11, 2022 - 5:21pm Plotted by: jkelly

RELATIVE BORDER SCALE IN INCHES 0 1 2 3

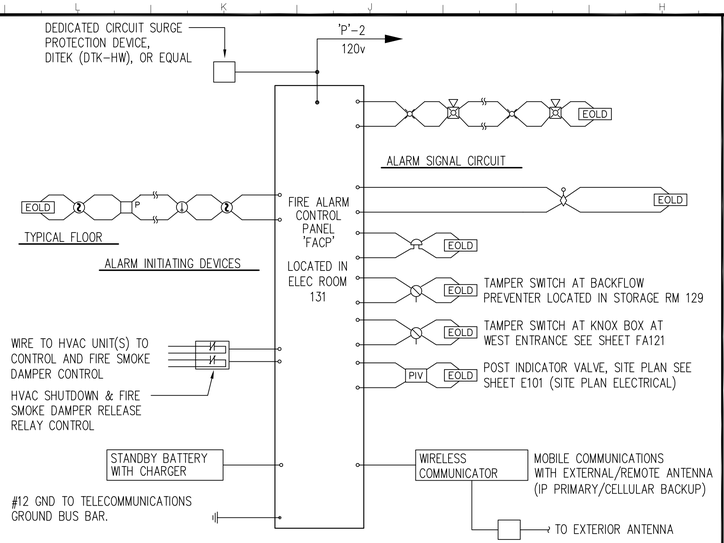

NOTE: THE FIRE ALARM SYSTEM SHALL CONFORM TO THE CALIFORNIA ELECTRICAL CODE (CEC) ARTICLE 760 AND THE CALIFORNIA FIRE CODE (CFC) SECTION 1007. INSTALLATION OF THE FIRE ALARM SYSTEM SHALL NOT BE STARTED UNTIL DETAILED PLANS AND SPECIFICATIONS, INCLUDING CALIFORNIA STATE FIRE MARSHAL LISTING NUMBERS FOR EACH COMPONENT OF THE SYSTEM HAVE BEEN APPROVED BY THE CALIFORNIA STATE FIRE MARSHAL. UPON COMPLETION OF INSTALLATION OF THE FIRE ALARM SYSTEM A SATISFACTORY TEST OF THE ENTIRE SYSTEM SHALL BE MADE IN THE PRESENCE OF THE STATE FIRE MARSHAL AND ANY OTHER ENFORCING AGENCIES.

BEFORE REQUESTING FINAL APPROVAL OF THE INSTALLATION THE INSTALLING CONTRACTOR SHALL FURNISH A WRITTEN STATEMENT TO THE FIRE MARSHAL TO THE EFFECT THAT THE SYSTEM HAS BEEN INSTALLED AND COMPLETELY TESTED IN ACCORDANCE WITH (2016) NFPA 72 SECTIONS 4.5.2 & FIG. 4.5.2.1, AND 10.4.1.1.

E16_FA03

2 FIRE ALARM BLOCK DIAGRAM — NO SCALE

VISUAL APPLIANCE MOUNTING HEIGHT CONSIDERATIONS IN SLEEP ROOMS

1. MIN. DISTANCE IN SLEEPING ROOMS IS 24" FROM CEILING TO TOP OF LENS FOR 110cd STROBES WITHIN 16' OF THE PILLOW.
2. 177cd STROBES, USED IN SLEEPING ROOMS, CAN BE WITHIN THE 24" MINIMUM DISTANCE FROM THE CEILING. THE HIGHER INTENSITY IS TO COMPENSATE FOR A POSSIBLE SMOKE LAYER.

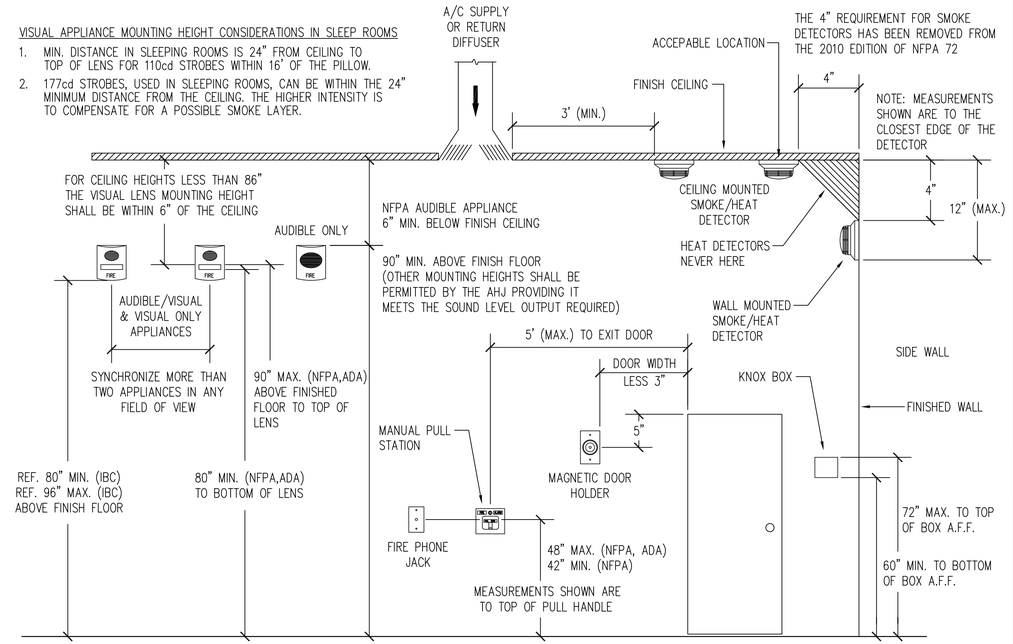

NOTE: REFER TO THE MANUFACTURER DEVICE INSTALLATION INSTRUCTIONS FOR BACKBOX MOUNTING HEIGHTS.

E16_FA106

1 FIRE ALARM DEVICE MOUNTING HEIGHT REFERENCE (NFPA 72) — NO SCALE

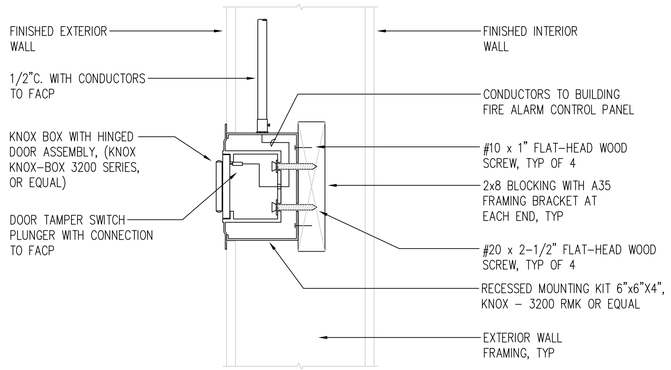

E16_KN01

3 KNOX BOX MOUNTING — NO SCALE

IDENTIFICATION STAMP
DIV. OF THE STATE ARCHITECT
APP: 03-121324 INC: A
REVIEWED FOR
SS ☐ FLS ☐ ACS ☑
DATE: 09/14/2022

OFFICE OF THE STATE FIRE MARSHAL
APPROVED FIRE AND PANIC ONLY
09/07/22
21-0233
Approval of this plan does not authorize or approve any omission or deviation from applicable regulations. Final approval is subject to field inspection. One set of approved plans shall be available on the project site at all times.

DGS GENERAL SERVICES

Department of General Services
Architecture & Engineering Sections
State of California
Real Estate Services Division
Project Management & Development Branch
707 Third Street, Suite 4-105
West Sacramento, California 95605

REGISTERED PROFESSIONAL ENGINEER — JOSEPH H. ABDELSAYED — No. E-18915 — ELECTRICAL — STATE OF CALIFORNIA

DMV
State of California
Department of Motor Vehicles

Issue

No.	Date	Description
1	9/2/22	

Project
SANTA MARIA FIELD OFFICE REPLACEMENT

2770 SANTA MARIA WAY
SANTA MARIA, CA 93455
SANTA BARBARA COUNTY

DEPT OF MOTOR VEHICLES

Supervisor	Designed	Drawn
J.ABDELSAYD	M. PRINCE	M. PRINCE

DSA App No.	SFM Permit No.
03-121324	21-S-0233-CP-ER

Sheet Title
FIRE ALARM DETAILS

Project Number
DGS000000140725

Reference North | Sheet Scale: AS NOTED | Sheet Number: FA521

Copyright © 2022, California Department of General Services - Real Estate Services Division

CAD File: X:\Projects\14xxxx\140725\DWG\PLT\FA521.dwg Plot Date: Jul 11, 2022 - 5:21pm Plotted by: jkelly

RELATIVE BORDER SCALE IN INCHES 0 1 2 3