ARCHITECT	ASSOCIATE ARCHITECT	LANDSCAPE ARCHITECT	STRUCTURAL ENGINEER	CIVIL ENGINEER	MECHANICAL ENGINEER	ELECTRICAL ENGINEER	FOOD SERVICE
NICHOLS, MELBURG & ROSSETTO 300 Knollcrest Drive Redding, CA 96002 (530) 222-3300 PHONE (530) 222-3538 FAX	LIONAKIS 1919 Nineteenth Street Sacramento, CA 95811 (916) 558-1900 PHONE (916) 558-1919 FAX	MICHAEL LANDER ASLA 20270 Lupine Drive Redding, CA 96002 (530) 223-2488 PHONE	LIONAKIS 1919 Nineteenth Street Sacramento, CA 95811 (916) 558-1900 PHONE (916) 558-1919 FAX	BKF ENGINEERING 200 Fourth Street, Suite 300 Santa Rosa, CA 95401 (707) 583-8530 PHONE (707) 583-8539 FAX	CAPITAL ENGINEERING CONSULTANTS, INC. 11020 Sun Center Drive, Suite 100 Rancho Cordova, CA 95670 (916) 851-3500 PHONE	TK1SC 15231 Laguna Canyon Road, Suite 100 Irvine, CA 92618 (949) 751-5800 PHONE (949) 751-5811 FAX	THE MARSHALL ASSOCIATES 240 3rd Street, Suite 2-B Oakland, CA 94607 (415) 677-1200 PHONE (415) 677-1210 FAX

STANDARDS

ALL CONTRACTORS PERFORMING WORK ON THIS PROJECT SHALL COMPLY WITH THE REQUIREMENTS OF 2019 CFC CHAPTER 11, 33 AND NFPA 241 FIRE-PREVENTION PROGRAM THROUGHOUT ALL PHASES OF CONSTRUCTION.

APPLICABLE STANDARDS:

ALL WORK PERFORMED & PRODUCTS FURNISHED SHALL COMPLY AS APPLICABLE WITH THE LATEST REGULATIONS OF:

- 2016 NFPA 13 AUTOMATIC SPRINKLER SYSTEMS (CALIFORNIA AMENDED)
- 2016 NFPA 14 INSTALLATION OF STANDPIPE AND HOSE SYSTEMS (CALIFORNIA AMENDED)
- NFPA 17A, STANDARD FOR WET CHEMICAL EXTINGUISHING SYSTEMS
- 2016 NFPA 20, PUMPS FOR FIRE PROTECTION
- 2016 NFPA 24, FIRE SERVICE MAINS (CALIFORNIA AMENDED)
- 2013 NFPA 25, INSPECTION, TESTING & MAINTENANCE OF WATER-BASED FIRE PROTECTION SYSTEMS (CALIFORNIA AMENDED)
- 2018 NFPA 30, FLAMMABLE AND COMBUSTIBLE LIQUIDS CODE
- 2018 NFPA 30A, MOTOR FUEL DISPENSING FACILITIES AND REPAIR GARAGES
- 2017 NFPA 58, LIQUIFIED PETROLEUM GAS CODE
- 2016 NFPA 72 NATIONAL FIRE ALARM CODE (CALIFORNIA AMENDED)
- 2016 NFPA 80, STANDARD FOR FIRE DOORS AND OTHER OPENING PROTECTIVES
- 2012 UL 305, STANDARD FOR PANIC HARDWARE
- 2003 UL 464, AUDIBLE SIGNAL APPLIANCES
- 1997 UL 2085, STANDARD FOR PROTECTED ABOVE-GROUND TANKS FOR FLAMMABLE AND COMBUSTIBLE LIQUIDS

AGENCY REVIEW

DIVISION OF THE STATE ARCHITECT (DSA) REVIEW IS LIMITED TO ACCESSIBILITY COMPLIANCE FOR THIS PROJECT. FIRE/LIFE SAFETY SHALL BE REVIEWED BY THE CALIFORNIA STATE FIRE MARSHAL (CSFM/SFM).

CALIFORNIA STATE FIRE MARSHAL AND THE DIVISION OF THE STATE ARCHITECT - ACCESSIBILITY COMPLIANCE SECTION SHALL REVIEW AND APPROVE SCOPE OF PROPOSED CHANGES PRIOR TO INSTALLATION OR IMPLEMENTATION OF WORK IN THE FIELD.

GRADING PLANS, DRAINAGE IMPROVEMENTS, ROAD AND ACCESS REQUIREMENTS AND ENVIRONMENTAL HEALTH CONSIDERATIONS SHALL COMPLY WITH ALL LOCAL ORDINANCES.

DEFERRED SUBMITTALS

ALL DEFERRED SUBMITTALS SHALL FIRST BE SUBMITTED TO THE REGISTERED DESIGN PROFESSIONAL WHO SHALL REVIEW THEM AND FORWARD THEM TO THE APPROPRIATE AGENCY, AS NOTED BELOW IN PARENTHESIS, WITH A NOTATION INDICATING THAT THE DEFERRED SUBMITTAL DOCUMENTS HAVE BEEN REVIEWED AND FOUND TO BE IN GENERAL CONFORMANCE WITH THE DESIGN OF THE BUILDING. THE DEFERRED SUBMITTAL ITEMS SHALL NOT BE INSTALLED UNTIL THE DEFERRED SUBMITTAL DOCUMENTS HAVE BEEN APPROVED BY THE BUILDING OFFICIAL. CBC 107.3.4.2

- FIRE SUPPRESSION SYSTEM (DEFERRED FIRE PROTECTION APPROVAL)
- KITCHEN HOOD FIRE SUPPRESSION SYSTEM (DEFERRED FIRE PROTECTION APPROVAL)
- HAZMAT STORAGE STRUCTURE DRY CHEMICAL FIRE SUPPRESSION SYSTEM (DEFERRED FIRE PROTECTION APPROVAL)

CONTRACTOR SHALL OBTAIN APPROVAL OF FIRE SPRINKLER AND FIRE ALARM SYSTEMS FROM THE OFFICE OF THE STATE FIRE MARSHAL PRIOR TO SUBMISSION OF SUBMITTAL TO THE DESIGN ARCHITECT. SEND SUBMITTAL TO:

OFFICE OF THE STATE FIRE MARSHAL
FIRE & LIFE SAFETY DIVISION
2251 HARVARD STREET, SUITE 130
SACRAMENTO, CA 95815
(916) 568-2957

SUBMITTAL DOCUMENTS SHALL INCLUDE THE FOLLOWING INFORMATION:
PROJECT NAME: RESIDENTIAL CENTER, UKIAH: REPLACEMENT OF EXISTING RESIDENTIAL CENTER
PROJECT NUMBER: 000000000001826

CALIFORNIA STATE FIRE MARSHAL (CSFM) FILE #: SEE LIST ON THIS SHEET
DEFERRED APPROVALS (CSFM):

1 - AUTOMATIC FIRE SPRINKLER SYSTEM
2 - KITCHEN HOOD AND DUCT FIRE SUPPRESSION SYSTEM
3 - FIRE ALARM SYSTEM FABRICATION (SHOP DRAWINGS)

SUBMITTALS SHALL INCLUDED APPLICABLE DRAWINGS, DETAILS, NOTES, ELEMENTS, PRODUCT INFORMATION, ETC. SHOP DRAWINGS SHALL BE SIGNED & SEALED BY THE LICENSED C-10 OR C-16 CONTRACTOR/INSTALLER FOR FIRE ALARM & FIRE SUPPRESSION SYSTEMS.

VICINITY MAP

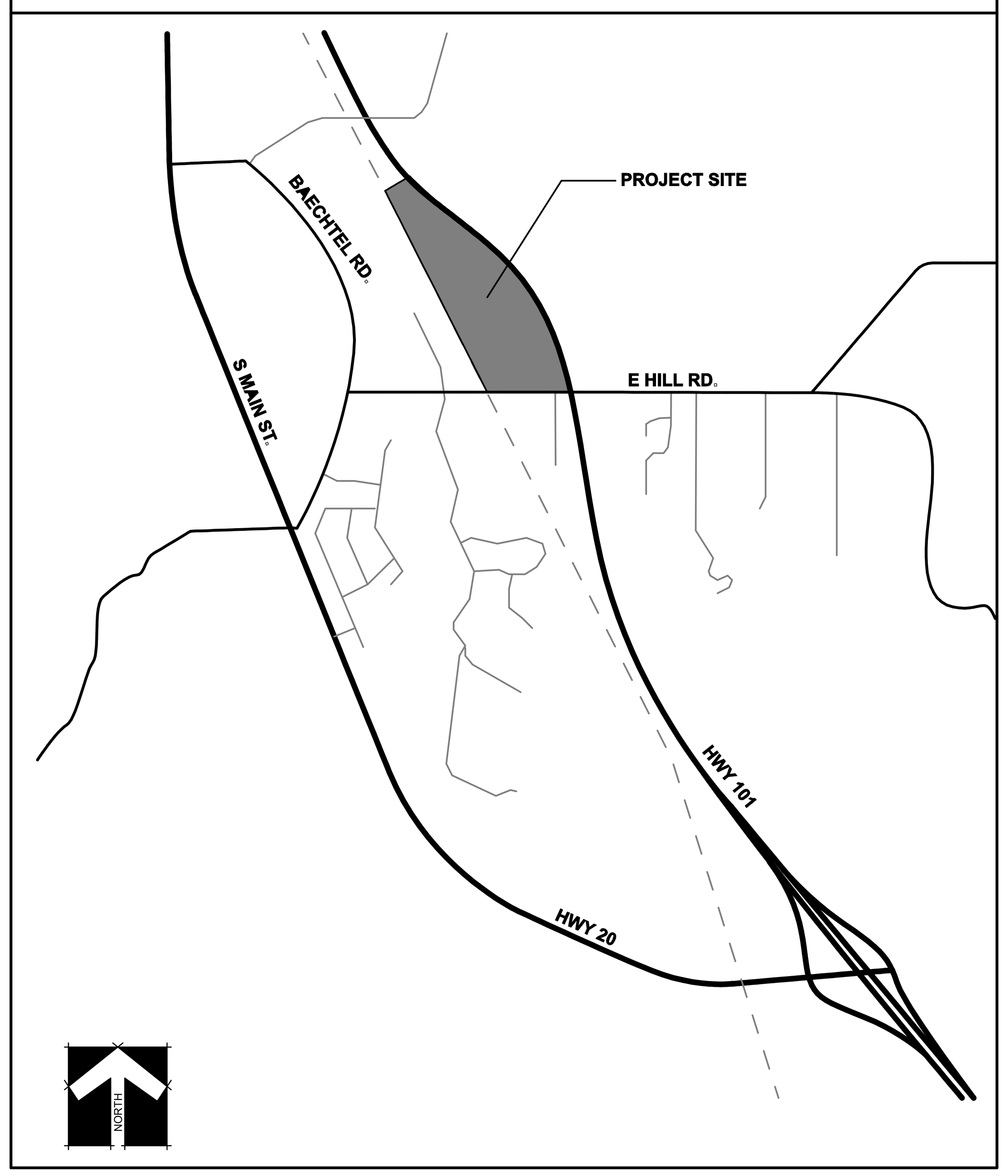

CODES

APPLICABLE CODES:
ALL WORK PERFORMED & PRODUCTS FURNISHED SHALL COMPLY AS APPLICABLE WITH THE LATEST REGULATIONS OF:

- 2019 CALIFORNIA BUILDING STANDARDS ADMINISTRATIVE CODE, PART 1, TITLE 24 C.C.R.
- 2019 CALIFORNIA BUILDING CODE (CBC), PART 2, TITLE 24 C.C.R.
- 2019 CALIFORNIA ELECTRICAL CODE (CEC), PART 3, TITLE 24 C.C.R.
- 2019 CALIFORNIA MECHANICAL CODE (CMC), PART 4, TITLE 24 C.C.R.
- 2019 CALIFORNIA PLUMBING CODE (CPC), PART 5, TITLE 24 C.C.R.
- 2019 CALIFORNIA ENERGY CODE, PART 6, TITLE 24 C.C.R.
- 2019 CALIFORNIA FIRE CODE, PART 9, TITLE 24 C.C.R.
- 2019 CALIFORNIA EXISTING BUILDING CODE, PART 10, TITLE 24 C.C.R.
- 2019 CALIFORNIA GREEN BUILDING STANDARDS CODE, PART 11, TITLE 24 C.C.R.
- 2019 CALIFORNIA REFERENCED STANDARDS CODE, PART 12, TITLE 24 C.C.R.
- TITLE 19 CALIFORNIA CODE OF REGULATIONS - PUBLIC SAFETY, DIVISION 1 STATE FIRE MARSHAL
- ASME BPVC (BOILER AND PRESSURE VESSEL CODE) SECTION VIII, DIVISION 1
- 2019 CALIFORNIA CODE OF REGULATIONS TITLE 8, CHAPTER 4, SUBCHAPTER 1 (UNIFIED PRESSURE VESSEL SAFETY ORDERS)

DGS# 1826
CSFM# SEE BELOW

ADMINISTRATION BUILDING & SITE - 20-N-2332-CP
COMET BUILDING - 21-N-0197-CP
EDUCATION BUILDING - 21-N-0198-CP
MENS HOUSING 1 - 21-N-0199-CP
MENS HOUSING 2 - 21-N-0200-CP
MENS HOUSING 3 - 21-N-0201-CP
WOMENS HOUSING 4 - 21-N-0202-CP
WOMENS HOUSING 5 - 21-N-0203-CP
WOMENS HOUSING 6 - 21-N-0204-CP
MULTI-PURPOSE BUILDING - 21-N-0205-CP
RECREATION BUILDING - 21-N-0206-CP
WAREHOUSE BUILDING - 21-N-0207-CP

NOTE: SEE SHEETS G100 & G101 FOR CLARIFICATION OF WHICH BUILDING EACH APPLICATION NUMBER PERTAINS TO

PROJECT NARRATIVE

THE PROJECT WILL CONSTRUCT A NEW CCC RESIDENTIAL CENTER IN WILLITS, CA THAT WILL CONSIST OF 66,728 TOTAL SQUARE FEET (SF). THIS RESIDENTIAL CENTER WILL INCLUDE TWELVE BUILDINGS CONSISTING OF AN ADMINISTRATION BUILDING, SEVEN DORMITORIES, AN EDUCATION BUILDING, A RECREATION BUILDING, A MULTI-PURPOSE WITH KITCHEN AND DINING ROOM WAREHOUSE WITH WORK AREA AND A HAZARDOUS MATERIALS STORAGE STRUCTURE. THE SITE WILL INCLUDE ASPHALT PAVED SURFACES FOR DRIVEWAYS AND PARKING AND CONCRETE PAVING FOR SERVICE AND STAGING AREAS AND WALKWAYS. THE FACILITY IS TO BE DESIGNED BASED ON THE PROTOTYPE AND CCC'S RESIDENTIAL NEEDS TO HOUSE 120 PERMANENT CORPS MEMBERS. THE FACILITY IS INTENDED TO BE DESIGNED TO ZERO NET ENERGY (ZNE) PER THE GOVERNOR'S EXECUTIVE ORDER B-18-12 AND ACHIEVE AT MINIMUM A LEADERSHIP IN ENERGY AND ENVIRONMENTAL DESIGN (LEED) SILVER CERTIFICATION.

PROJECT DATA

ASSESSOR'S PARCEL NUMBER: 007-100-28 & 007-180-18

ZONING: HEAVY INDUSTRIAL & INDUSTRIAL PARK

PROJECT STREET ADDRESS: 440 EAST HILL ROAD, WILLITS, CA 95490

PARCEL AREA: 26.7 ACRES

TOTAL BUILDING CONDITIONED FLOOR AREA: 66,728 S.F.

- ADMIN. — 3,529 SQ. FT.
- COMET — 3,233 SQ. FT.
- MEN'S HOUSING — (3) AT 3,005 SQ. FT EACH
- WOMEN'S HOUSING — (3) AT 3,005 SQ. FT. EACH
- EDUCATION — 6,155 SQ. FT.
- MULTIPURPOSE — 16,244 SQ. FT.
- RECREATION — 5,834 SQ. FT.
- WAREHOUSE — 13,703 SQ. FT.

REQUIRED MINIMUM SETBACKS: FRONT AND REAR – 20 FEET; SIDE YARD – 10 FEET; STREET RIGHT OF WAY AT EAST HILL ROAD – 30 FEET

WILDLAND URBAN INTERFACE: SITE IS LOCATED WITHIN A LOCAL RESPONSIBILITY AREA (LITTLE LAKE FIRE PROTECTION DISTRICT) AND IS DESIGNATED A MODERATE RISK (CBC CHAPTER 7A IS NOT APPLICABLE)

IDENTIFICATION STAMP
DIV. OF THE STATE ARCHITECT
APP: 02-118630 INC:
REVIEWED FOR
SS ☐ FLS ☐ ACS ☑
DATE: 04/13/2021

OFFICE OF THE STATE FIRE MARSHAL
APPROVED FIRE AND PANIC ONLY
Approval of this plan does not authorize or approve any omission or deviation from applicable regulations. Final approval is subject to field inspection. One set of approved plans shall be available on the project site at all times.
PERMIT NO.: 20-N-2332-CP
REVIEWED BY: LITO CATAYLO, OSFM
DATE: 3/ 1 /2021

GENERAL SERVICES
Department of General Services
State of California
Real Estate Services Division
Project Management & Development Branch
707 Third Street, Suite 4-105
West Sacramento, California 95605

NICHOLS MELBURG & ROSSETTO
ARCHITECTS + ENGINEERS
300 Knollcrest Drive
Redding, CA. 96002
(530) 222-3300 (530) 222-3538 FAX
http://www.nmrdesign.com

Copyright © 2020
All ideas, designs, arrangements and plans indicated or represented by this drawing are owned by, and the property of, NICHOLS, MELBURG and ROSSETTO and were created, evolved and developed for use on, and in conjunction with, the specified project. None of such ideas, designs, arrangements or plans shall be used by, or disclosed to any person, firm or corporation for any purpose whatsoever without the written permission of NICHOLS, MELBURG and ROSSETTO.

LICENSE STAMPS
LICENSED ARCHITECT KYLE MATTI C-27504 REN. 10/31/21 STATE OF CALIFORNIA

CONSULTANT

DRAWING STATUS
CONSTRUCTION DOCUMENTS

ISSUE

No.	Date	Description
1	10/20/2020	INITIAL PLAN REVIEW
2	01/22/2021	AGENCY RESUBMITTAL
3	03/22/2021	AGENCY RESUBMITTAL

If drawing is not 30" x 42" it is a reduced print

PROJECT
RESIDENTIAL CENTER, UKIAH: REPLACEMENT OF EXISTING RESIDENTIAL CENTER
440 EAST HILL ROAD
WILLITS, CALIFORNIA 95490
MENDOCINO COUNTY
CALIFORNIA CONSERVATION CORP

Supervisor	Designed	Drawn
KJM	DMH	AMP

DSA Application No.
02-118630

SHEET TITLE
COVER SHEET
VOLUME I

DGS Project Number 000000000001826
NMR Project Number 18-6456

Reference North — NORTH
Sheet Scale
Sheet Number G001

ISSUE DATE
July 9, 2021

Plot Date: 3/23/2021 4:55:29 PM
File Name: BIM 360://CCC Willits Residential Center/A_CCC-WRC-COMMON.rvt

SHEET INDEX

VOLUME I

GENERAL

G001	COVER SHEET VOLUME I
G002	SHEET INDEX
G003	GENERAL NOTES AND ABBREVIATIONS
G010	CALGREEN CHECKLIST
G011	CALGREEN CHECKLIST
G012	CALGREEN CHECKLIST
G100	SITE CODE ANALYSIS & ACCESSIBILITY PLAN - SOUTH
G101	SITE CODE ANALYSIS & ACCESSIBILITY PLAN - NORTH
G110	LIFE SAFETY PLAN - ADMIN & WAREHOUSE BUILDINGS
G111	LIFE SAFETY PLAN - COMET & HOUSING BUILDINGS
G112	LIFE SAFETY PLAN - EDUCATION & RECREATION BUILDINGS
G113	LIFE SAFETY PLAN - MULTI-PURPOSE BUILDING
G120	CEILING, ROOF, & FLOOR ASSEMBLIES
G121	WALL ASSEMBLIES
G130	ASSEMBLY PENETRATIONS
G210	ACCESSIBILITY DETAILS - SITE AND PARKING
G212	ACCESSIBILITY DETAILS
G213	ACCESSIBILITY DETAILS
G300	SIGNAGE PLANS - ADMIN & WAREHOUSE BUILDINGS
G301	SIGNAGE PLANS - COMET, HOUSING, EDUCATION & RECREATION BLDGS
G302	SIGNAGE PLAN - MULTI-PURPOSE BUILDINGS
G400	WETLANDS PROTECTION SITE PLAN

CIVIL

C0.01	NOTES, LEGEND AND ABBREVIATIONS
C0.02	KEY MAP
C1.01	DEMOLITION PLAN (NORTH)
C1.02	DEMOLITION PLAN (SOUTH)
C2.00	PLAN & PROFILE EAST HILL ROAD
C2.01	PLAN & PROFILE ROAD "A"
C2.02	PLAN & PROFILE ROAD "A"
C2.03	PLAN & PROFILE ROAD "B"
C2.04	PLAN & PROFILE ROAD "B"
C2.05	PLAN & PROFILE ROAD "C"
C2.06	PLAN & PROFILE ROAD "C"
C2.07	PLAN & PROFILE BRIDGE ROAD
C2.08	CROSS SECTIONS ROAD "A"
C2.09	CROSS SECTIONS ROAD "B"
C2.10	CROSS SECTIONS ROAD "C"
C2.11	CROSS SECTIONS BRIDGE ROAD
C3.01	GRADING PLAN HOUSING AREA
C3.02	GRADING PLAN RECREATION AREA
C3.03	GRADING PLAN ADMIN AND PARKING
C3.04	GRADING PLAN WAREHOUSE, STORAGE AND PARKING AREA
C3.05	GRADING PLAN CREW STAGING AREA
C3.06	GRADING PLAN SOLAR AREA AND EXERCISE TRAIL
C4.01	UTILITY PLAN HOUSING AREA
C4.02	UTILITY PLAN RECREATION AREA
C4.03	UTILITY PLAN ADMIN AND PARKING
C4.04	UTILITY PLAN WAREHOUSE, STORAGE AND PARKING AREA
C4.05	UTILITY PLAN CREW STAGING AREA
C4.06	UTILITY PLAN SOLAR AREA AND EXERCISE TRAIL
C4.07	UTILITY PLAN STORMDRAIN PROFILES
C4.08	UTILITY PLAN SEWER LIFT STATION
C5.01	STRIPING PLAN RECREATION AREA
C5.02	STRIPING PLAN ADMIN AND PARKING
C5.03	STRIPING PLAN WAREHOUSE, STORAGE AND PARKING AREA
C6.01	CIVIL CONSTRUCTION DETAILS & SECTIONS
C6.02	CIVIL CONSTRUCTION DETAILS
C6.03	STANDARD DETAILS
C6.04	STANDARD DETAILS
C7.01	EROSION & SEDIMENT CONTROL PLAN (NORTH)
C7.02	EROSION & SEDIMENT CONTROL PLAN (SOUTH)

LANDSCAPE

L1	PLANTING SCHEDULE
L2	PLANTING PLAN
L3	PLANTING PLAN
L4	PLANTING PLAN
L5	IRRIGATION SCHEDULE
L6	IRRIGATION PLAN
L7	IRRIGATION PLAN
L8	IRRIGATION PLAN
L9	IRRIGATION DETAILS
L10	MITIGATION WETLAND PLANTING PLAN

ARCHITECTURAL SITE

A010	OVERALL SITE PLAN
A020	SITE PLAN - SOUTH
A021	SITE PLAN - NORTH
A030	ENLARGED SITE PLAN - SOUTHEAST
A031	ENLARGED SITE PLAN - SOUTHWEST
A032	ENLARGED SITE PLAN - EAST
A033	ENLARGED SITE PLAN - WEST
A034	ENLARGED SITE PLAN - NORTH
A035	ENLARGED SITE PLAN - PV ARRAY
A050	PARTIAL SITE PLANS
A051	PARTIAL SITE PLANS
A060	SITE DETAILS
A061	SITE DETAILS
A062	SITE DETAILS
A063	SITE DETAILS
A064	SITE DETAILS

ARCHITECTURAL - ADMINISTRATION BUILDING

A201A	ADMINISTRATION FLOOR PLAN, DIMENSION PLAN
A221A	ADMINISTRATION ENLARGED FLOOR PLANS
A240A	ADMINISTRATION ROOF PLAN, REFLECTED CEILING PLAN
A300A	ADMINISTRATION EXTERIOR ELEVATIONS
A400A	ADMINISTRATION BUILDING SECTIONS
A401A	ADMINISTRATION BUILDING SECTIONS
A402A	ADMINISTRATION BUILDING SECTIONS
A403A	ADMINISTRATION BUILDING SECTIONS
A500A	ADMINISTRATION INTERIOR ELEVATIONS

ARCHITECTURAL - COMET BUILDING

A201C	COMET FLOOR PLAN, DIMENSION PLAN, ROOF PLAN, RCP
A220C	ENLARGED FLOOR PLAN
A300C	COMET EXTERIOR ELEVATIONS
A400C	COMET BUILDING SECTIONS
A401C	COMET BUILDING SECTIONS
A500C	COMET INTERIOR ELEVATIONS
A501C	COMET INTERIOR ELEVATIONS

ARCHITECTURAL - EDUCATION BUILDING

A201E	EDUCATION FLOOR PLAN, DIMENSION PLAN & ENLARGED PLANS
A211E	EDUCATION ROOF PLAN & REFLECTED CEILING PLAN
A300E	EDUCATION EXTERIOR ELEVATIONS
A400E	EDUCATION BUILDING SECTION
A401E	EDUCATION BUILDING SECTION
A402E	EDUCATION BUILIDING SECTION
A500E	EDUCATION INTERIOR ELEVATIONS

ARCHITECTURAL - HOUSING MEN (BLDG'S 1,2,3)

A201HM	MEN'S HOUSING FLOOR PLAN, DIMENSION PLAN, ROOF PLAN, RCP
A220HM	MEN'S HOUSING ENLARGED FLOOR PLAN
A300HM	MEN'S HOUSING EXTERIOR ELEVATIONS
A400HM	MEN'S HOUSING BUILDING SECTIONS
A401HM	MEN'S HOUSING BUILDING SECTIONS
A500HM	MEN'S HOUSING INTERIOR ELEVATIONS

ARCHITECTURAL-HOUSING WOMEN (BLGS 4,5,6)

A201HW	WOMEN'S HOUSING FLOOR PLAN, DIMENSION PLAN, ROOF PLAN, RCP
A220HW	WOMEN'S HOUSING ENLARGED FLOOR PLAN
A300HW	WOMEN'S HOUSING EXTERIOR ELEVATIONS
A400HW	WOMEN'S HOUSING BUILDING SECTIONS
A401HW	WOMEN'S HOUSING BUILDING SECTIONS
A500HW	WOMEN'S HOUSING INTERIOR ELEVATIONS

ARCHITECTURAL MULTI-PURPOSE BUILDING

A201M	MULTI-PURPOSE FLOOR PLAN
A210M	MULTI-PURPOSE DIMENSION PLAN
A220M	MULTI-PURPOSE ENLARGED PLAN
A230M	MULTI-PURPOSE BASKETBALL COURT STRIPING PLAN
A240M	MULTI-PURPOSE ROOF PLAN
A250M	MULTI-PURPOSE REFLECTED CEILING PLAN
A300M	MULTI-PURPOSE EXTERIOR ELEVATIONS
A301M	MULTI-PURPOSE EXTERIOR ELEVATIONS
A401M	MULTI-PURPOSE BUILDING SECTION
A402M	MULTI-PURPOSE BUILDING SECTION
A403M	MULTI-PURPOSE BUILDING SECTION
A404M	MULTI-PURPOSE BUILDING SECTION
A405M	MULTI-PURPOSE BUILDING SECTION
A406M	MULTI-PURPOSE BUILDING SECTION
A407M	MULTI-PURPOSE BUILDING SECTION
A408M	MULTI-PURPOSE BUILDING SECTION
A409M	MULTI-PURPOSE BUILDING SECTION
A410M	MULTI-PURPOSE BUILDING SECTION
A500M	MULTI-PURPOSE INTERIOR ELEVATIONS
A501M	MULTI-PURPOSE INTERIOR ELEVATIONS
A502M	MULTI-PURPOSE INTERIOR ELEVATIONS
A503M	MULTI-PURPOSE INTERIOR ELEVATIONS

ARCHITECTURAL - RECREATION BUILDING

A201R	RECREATION BLDG. FLOOR PLAN & DIMENSION PLAN & ENLARGED PLANS
A211R	RECREATION BLDG. ROOF PLAN & REFLECTED CEILING PLAN
A300R	RECREATION BLDG. EXTERIOR ELEVATIONS
A400R	RECREATION BLDG. BUILDING SECTIONS
A401R	RECREATION BLDG. BUILDING SECTIONS
A500R	RECREATION BLDG. INTERIOR ELEVATION
A501R	RECREATION BLDG. INTERIOR ELEVATION

ARCHITECTURAL - WAREHOUSE BUILDING

A201W	WAREHOUSE BLDG. FLOOR PLAN
A211W	WAREHOUSE BLDG. DIMENSION PLAN
A220W	WAREHOUSE BLDG ENLARGED FLOOR PLAN
A240W	WAREHOUSE BLDG. ROOF PLAN
A251W	WAREHOUSE BLDG. REFLECTED CEILING PLAN
A300W	WAREHOUSE BLDG. EXTERIOR ELEVATIONS
A301W	WAREHOUSE BLDG. EXTERIOR ELEVATIONS
A401W	WAREHOUSE BLDG. SECTIONS
A402W	WAREHOUSE BLDG. SECTIONS
A403W	WAREHOUSE BLDG. SECTIONS
A404W	WAREHOUSE BLDG. SECTIONS
A405W	WAREHOUSE BLDG. SECTIONS
A406W	WAREHOUSE BLDG. SECTIONS
A407W	WAREHOUSE BLDG. SECTIONS
A501W	WAREHOUSE BLDG. INTERIOR ELEVATIONS
A502W	WAREHOUSE BLDG. INTERIOR ELEVATIONS

ARCHITECTURAL - COMMON SHEETS

A710	DOOR SCHEDULE
A711	DOOR & FRAME TYPES
A712	DOOR & FRAME DETAILS
A713	DOOR & FRAME DETAILS
A720	WINDOW & LOUVER TYPES
A721	WINDOW & LOUVER DETAILS
A722	WINDOW & LOUVER DETAILS
A800	EXTERIOR DETAILS - BUILDING ENVELOPE
A810	EXTERIOR DETAILS - ROOFING
A811	EXTERIOR DETAILS - ROOFING
A820	EXTERIOR DETAILS - MISCELLANEOUS
A900	FINISH SCHEDULE
A901	FINISH SCHEDULE
A902	FINISH SCHEDULE
A930	INTERIOR DETAILS - CEILINGS
A931	INTERIOR DETAILS - CEILINGS
A940	INTERIOR DETAILS - CASEWORK DETAILS
A960	INTERIOR DETAILS - MISCELLANEOUS
A961	INTERIOR DETAILS - MISCELLANEOUS
A965	INTERIOR DETAILS - SIGNAGE DETAILS
A980	WALL PROTECTION

INTERIOR DESIGN

ID201	FINISH FLOOR PLAN - ADMIN & WAREHOUSE BUILDING
ID202	FINISH FLOOR PLAN - COMET & HOUSING BUILDINGS
ID203	FINISH FLOOR PLAN - EDUCATION & RECREATION BUILDING
ID204	FINISH FLOOR PLAN - MULTI-PURPOSE BUILDING

VOLUME II

GENERAL

G001	COVER SHEET VOLUME II
G002	SHEET INDEX

STRUCTURAL

S001	GENERAL NOTES
S011	TYPICAL NOTES
S012	TYPICAL NOTES
S013	TYPICAL NOTES
S201A	ADMINISTRATION FOUNDATION PLAN
S202A	ADMINISTRATION ROOF FRAMING PLAN
S211A	ADMINISTRATION 3D VIEWS
S401A	ADMINISTRATION STRUCTURAL BUILDING SECTIONS
S402A	ADMINISTRATION STRUCTURAL BUILDING SECTIONS
S201C	COMET FOUNDATION PLAN
S202C	COMET ROOF FRAMING PLAN
S211C	COMET 3D VIEWS
S401C	COMET STRUCTURAL BUILDING SECTIONS
S201E	EDUCATION FOUNDATION PLAN
S202E	EDUCATION ROOF FRAMING PLAN
S211E	EDUCATION 3D VIEWS
S401E	EDUCATION STRUCTURAL BUILDING SECTIONS
S402E	EDUCATION STRUCTURAL BUILDING SECTIONS
S201HM	MEN'S HOUSING FOUNDATION PLAN
S202HM	MEN'S HOUSING ROOF FRAMING PLAN
S211HM	MEN'S HOUSING 3D VIEWS
S401HM	MEN'S HOUSING STRUCTURAL BUILDING SECTIONS
S201HW	WOMEN'S HOUSING FOUNDATION PLAN
S202HW	WOMEN'S HOUSING ROOF FRAMING PLAN
S211HW	WOMEN'S HOUSING 3D VIEWS
S401HW	WOMEN'S HOUSING STRUCTURAL BUILDING SECTIONS
S201M	MULTI-PURPOSE FOUNDATION PLAN
S202M	MULTI-PURPOSE ROOF FRAMING PLAN
S203M	MULTI-PURPOSE ROOF COLLECTOR/STRAP/SP NAILING PLAN
S211M	MULTI-PURPOSE 3D VIEWS
S401M	MULTI-PURPOSE STRUCTURAL BUILDING SECTIONS
S402M	MULTI-PURPOSE STRUCTURAL BUILDING SECTIONS
S403M	MULTI-PURPOSE STRUCTURAL BUILDING SECTIONS
S404M	MULTI-PURPOSE STRUCTURAL BUILDING SECTIONS
S201R	RECREATION FOUNDATION PLAN
S202R	RECREATION ROOF FRAMING PLAN
S211R	RECREATION 3D VIEWS
S401R	RECREATION STRUCTURAL BUILDING SECTIONS
S402R	RECREATION STRUCTURAL BUILDING SECTIONS
S201W	WAREHOUSE FOUNDATION PLAN
S202W	WAREHOUSE ROOF FRAMING PLAN
S211W	WAREHOUSE 3D VIEWS
S401W	WAREHOUSE STRUCTURAL BUILDING SECTIONS
S402W	WAREHOUSE STRUCTURAL BUILDING SECTIONS
S531	DETAILS - TYPICAL CONCRETE
S532	DETAILS - TYPICAL CONCRETE
S551	DETAILS - STRUCTURAL STEEL
S561	DETAILS - TYPICAL WOOD FRAMING
S562	DETAILS - TYPICAL WOOD FRAMING
S563	DETAILS - TYPICAL WOOD SHEAR WALL FRAMING
S564	DETAILS - TYPICAL WOOD TRUSS FRAMING
S565	DETAILS - TYPICAL MANUFACTURED LUMBER FRAMING
S566	DETAILS - WOOD FRAMING
S567	DETAILS - WOOD FRAMING
S568	DETAILS - WOOD FRAMING
S569	DETAILS - WOOD FRAMING
S570	DETAILS - WOOD FRAMING
S571	DETAILS - WOOD FRAMING
S701	CLT AND GLB TRUSS DETAILS
S702	DETAILS
S703	DETAILS - WOOD FRAMING

MECHANICAL

M001	HVAC LEGENDS & NOTES
M002	HVAC SCHEDULES
M003	HVAC SCHEDULES
M101A	ADMINISTRATION BLDG HVAC ZONE PLAN
M201A	ADMINISTRATION BLDG HVAC FLOOR PLAN
M202A	ADMINISTRATION BLDG HVAC ROOF PLAN
M301A	ADMINISTRATION BLDG HVAC PIPING FLOOR PLAN
M401A	ADMINISTRATION BLDG TITLE 24 COMPLIANCE
M402A	ADMINISTRATION BLDG TITLE 24 COMPLIANCE
M403A	ADMINISTRATION BLDG TITLE 24 COMPLIANCE
M101C	COMET BLDG HVAC ZONE PLAN
M201C	COMET BLDG HVAC FLOOR PLAN
M202C	COMET BLDG HVAC PLENUM PLAN
M301C	COMET BLDG HVAC PIPING FLOOR PLAN
M401C	COMET BLDG TITLE 24 COMPLIANCE
M402C	COMET BLDG TITLE 24 COMPLIANCE
M403C	COMET BLDG TITLE 24 COMPLIANCE
M101E	EDUCATION BLDG HVAC ZONE PLAN
M201E	EDUCATION BLDG HVAC FLOOR PLAN
M202E	EDUCATION BLDG HVAC PLENUM PLAN
M301E	EDUCATION BLDG HVAC PIPING FLOOR PLAN
M401E	EDUCATION BLDG TITLE 24 COMPLIANCE
M402E	EDUCATION BLDG TITLE 24 COMPLIANCE
M101HM	MEN'S HOUSING HVAC ZONE PLAN
M201HM	MEN'S HOUSING HVAC FLOOR PLAN
M202HM	MEN'S HOUSING HVAC PLENUM PLAN
M301HM	MEN'S HOUSING HVAC PIPING FLOOR PLAN
M401HM	MEN'S HOUSING TITLE 24 COMPLIANCE
M402HM	MEN'S HOUSING TITLE 24 COMPLIANCE
M403HM	MEN'S HOUSING TITLE 24 COMPLIANCE
M101HW	WOMEN'S HOUSING HVAC ZONE PLAN
M201HW	WOMEN'S HOUSING HVAC FLOOR PLAN
M202HW	WOMEN'S HOUSING HVAC PLENUM PLAN
M301HW	WOMEN'S HOUSING HVAC PIPING FLOOR PLAN
M401HW	WOMEN'S HOUSING TITLE 24 HOUSING
M402HW	WOMEN'S HOUSING TITLE 24 HOUSING
M403HW	WOMEN'S HOUSING TITLE 24 HOUSING
M101M	MULTI-PURPOSE BLDG HVAC ZONE PLAN
M201M	MULTI-PURPOSE BLDG HVAC FLOOR PLAN
M202M	MULTI-PURPOSE BLDG HVAC ROOF PLAN
M301M	MULTI-PURPOSE BLDG HVAC PIPING FLOOR PLAN
M302M	MULTI-PURPOSE BLDG HVAC PIPING ROOF PLAN
M401M	MULTI-PURPOSE BLDG TITLE 24 COMPLIANCE
M402M	MULTI-PURPOSE BLDG TITLE 24 COMPLIANCE
M403M	MULTI-PURPOSE BLDG TITLE 24 COMPLIANCE
M404M	MULTI-PURPOSE BLDG TITLE 24 COMPLIANCE
M101R	RECREATION BLDG HVAC ZONE PLAN
M201R	RECREATION BLDG HVAC FLOOR PLAN
M202R	RECREATION BLDG HVAC PLENUM PLAN
M301R	RECREATION BLDG HVAC PIPING FLOOR PLAN
M401R	RECREATION BLDG TITLE 24 COMPLIANCE
M402R	RECREATION BLDG TITLE 24 COMPLIANCE
M101W	WAREHOUSE BLDG HVAC ZONE PLAN
M201W	WAREHOUSE BLDG HVAC FLOOR PLAN
M202W	WAREHOUSE BLDG HVAC PLENUM PLAN
M301W	WAREHOUSE BLDG HVAC PIPING FLOOR PLAN
M401W	WAREHOUSE BLDG TITLE 24 COMPLIANCE
M402W	WAREHOUSE BLDG TITLE 24 COMPLIANCE
M400	HVAC PIPING DIAGRAMS
M500	HVAC DETAILS
M501	HVAC DETAILS
M502	HVAC DETAILS
M600	HVAC CONTROLS
M601	HVAC CONTROLS
M602	HVAC CONTROLS
M603	HVAC CONTROLS
M604	HVAC CONTROLS

PLUMBING

P001	PLUMBING LEGENDS & NOTES
P002	PLUMBING SCHEDULES
P003	PLUMBING FIXTURE SCHEDULE
P101	PLUMBING SITE PLAN
P201A	ADMINISTRATION BLDG PLUMBING FLOOR PLAN
P202A	ADMINISTRATION BLDG PLUMBING ROOF PLAN
P201C	COMET BLDG PLUMBING FLOOR PLAN
P201E	EDUCATION BLDG PLUMBING FLOOR PLAN
P201HM	MEN'S HOUSING PLUMBING FLOOR PLAN
P201HW	WOMEN'S HOUSING PLUMBING FLOOR PLAN
P201M	MULTI-PURPOSE BLDG PLUMBING FLOOR PLAN
P202M	MULTI-PURPOSE BLDG PLUMBING ROOF PLAN
P401M	MULTI-PURPOSE PLUMBING ENLARGED FLOOR PLAN & CALCULATION
P402M	MULTI-PURPOSE BLDG PLUMBING ENLARGED FLOOR PLAN
P201R	RECREATION BLDG PLUMBING FLOOR PLAN
P202R	RECREATION BLDG PLUMBING ROOF PLAN
P201W	WAREHOUSE BLDG PLUMBING FLOOR PLAN
P500	PLUMBING DETAILS
P501	PLUMBING DETAILS

FIRE PROTECTION

FP001	FIRE PROTECTION LEGENDS, NOTES, & DETAILS
FP201A	ADMINISTRATION BLDG FIRE PROTECTION FLOOR PLAN
FP201C	COMET BLDG FIRE PROTECTION FLOOR PLAN
FP201E	EDUCATION BLDG FIRE PROTECTION FLOOR PLAN
FP201HM	MEN'S HOUSING FIRE PROTECTION FLOOR PLAN
FP201HW	WOMEN'S HOUSING FIRE PROTECTION FLOOR PLAN
FP201M	MULTI-PURPOSE BLDG FIRE PROTECTION FLOOR PLAN
FP201R	RECREATION BLDG FIRE PROTECTION FLOOR PLAN
FP201W	WAREHOUSE BLDG FIRE PROTECTION FLOOR PLAN

VOLUME III

GENERAL

G001	COVER SHEET VOLUME III
G002	SHEET INDEX

ELECTRICAL

E001	SYMBOL LIST
E020	SITE PLAN - SOUTH
E021	SITE PLAN - NORTH
E022	SITE LIGHTING PLAN
E023	ENLARGED SITE PLANS
E024	SITE LIGHTING PHOTOMETRIC PLAN
E030	ENLARGED SITE UTILITY PLAN
E101A	ADMINISTRATION BUILDING LIGHTING PLAN
E102A	ADMINISTRATION BUILDING EMERGENCY LIGHTING PHOTOMETRIC PLAN
E201A	ADMINISTRATION BUILDING POWER AND SIGNAL PLAN
E301A	ADMINISTRATION BUILDING MECHANICAL POWER PLAN
E407A	ADMINISTRATION BUILDING PANEL SCHEDULES
E505A	TITLE 24 ADMIN BUILDING
E101C	COMET LIGHTING PLAN
E102C	COMET EMERGENCY LIGHTING PHOTOMETRIC PLAN
E201C	COMET POWER AND SIGNAL PLAN
E301C	COMET MECHANICAL POWER PLAN
E407C	COMET PANEL SCHEDULES
E505C	TITLE 24 COMET BUILDING
E101E	EDUCATION BUILDING LIGHTING PLAN
E102E	EDUCATION BUILDING EMERGENCY LIGHTING PHOTOMETRIC PLAN
E201E	EDUCATION BUILDING POWER AND SIGNAL PLAN
E301E	EDUCATION BUILDING MECHANICAL POWER PLAN
E407E	EDUCATION BUILDING PANEL SCHEDULES
E505E	TITLE 24 EDUCATION BUILDING
E101HM	MEN'S HOUSING LIGHTING PLAN
E102HM	MEN'S HOUSING EMERGENCY LIGHTING PHOTOMETRIC PLAN
E201HM	MEN'S HOUSING POWER AND SIGNAL PLAN
E301HM	MEN'S HOUSING MECHANICAL POWER PLAN
E407HM	MEN'S HOUSING PANEL SCHEDULES
E505HM	TITLE 24 MEN'S HOUSING
E101HW	WOMEN'S HOUSING LIGHTING PLAN
E102HW	WOMEN'S HOUSING EMERGENCY LIGHTING PHOTOMETRIC PLAN
E201HW	WOMEN'S HOUSING POWER AND SIGNAL PLAN
E301HW	WOMEN'S HOUSING MECHANICAL POWER PLAN
E407HW	WOMEN'S HOUSING PANEL SCHEDULES
E505HW	TITLE 24 WOMEN'S HOUSING
E101M	MULTI-PURPOSE BUILDING LIGHTING PLAN
E102M	MULTI-PURPOSE BUILDING EMERGENCY LIGHTING PHOTOMETRIC PLAN
E201M	MULTI-PURPOSE BUILDING POWER AND SIGNAL PLAN
E202M	MULTI-PURPOSE BUILDING ENLARGED KITCHEN PLAN
E301M	MULTI-PURPOSE BUILDING MECHANICAL POWER PLAN
E407M	MULTI-PURPOSE BUILDING PANEL SCHEDULES
E505M	TITLE 24 MULTI-PURPOSE BUILDING
E101R	RECREATION BUILDING LIGHTING PLAN
E102R	RECREATION BUILDING EMERGENCY LIGHTING PHOTOMETRIC PLAN
E201R	RECREATION BUILDING POWER AND SIGNAL PLAN
E301R	RECREATION BUILDING MECHANICAL POWER PLAN
E407R	RECREATION BUILDING PANEL SCHEDULES
E505R	TITLE 24 RECREATION BUILDING
E101W	WAREHOUSE BUILDING LIGHTING PLAN
E102W	WAREHOUSE BUILDING EMERGENCY LIGHTING PHOTOMETRIC PLAN
E201W	WAREHOUSE BUILDING POWER AND SIGNAL PLAN
E301W	WAREHOUSE BUILDING MECHANICAL POWER PLAN
E407W	WAREHOUSE BUILDING PANEL SCHEDULES
E505W	TITLE 24 WAREHOUSE BUILDING
E401	SINGLE LINE DIAGRAM
E402	POWER SYSTEM STUDY AND TRANSFORMER SCHEDULE
E403	GENERATOR SCHEDULE
E404	GENERATOR SPECIFICATIONS
E405	ATS SCHEDULE
E406	SPD SCHEDULE
E501	LIGHTING FIXTURE SCHEDULE
E503	DISTRIBUTED LIGHTING CONTROLS
E504	SEQUENCE OF OPERATION
E505	TITLE 24 POWER DISTRIBUTION
E506	TITLE 24 EXTERIOR LIGHTING
E601	DETAILS
E602	DETAILS
E603	DETAILS
E604	DETAILS
E605	AV DETAILS
E606	AV DETAILS
E701	TELECOM PATHWAYS AND GROUNDING
E801	PV SITE PLAN
E802	PV SINGLE LINE DIAGRAM
E803	PV EQUIPMENT
E804	PV EQUIPMENT
E805	PV EQUIPMENT
E806	PV SIGNAGE

FIRE ALARM

FA001	FIRE ALARM SYMBOL LIST
FA002	FIRE ALARM DETAILS
FA010	FIRE ALARM RISER DIAGRAM
FA011	FIRE ALARM RISER DIAGRAM
FA012	FIRE ALARM CALCULATIONS
FA201A	ADMINISTRATION BUILDING FIRE ALARM PLAN
FA201C	COMET FIRE ALARM PLAN
FA201E	EDUCATION BUILDING FIRE ALARM PLAN
FA201HM	MEN'S HOUSING FIRE ALARM PLAN
FA201HW	WOMEN'S HOUSING FIRE ALARM PLAN
FA201M	MULTI-PURPOSE BUILDING FIRE ALARM PLAN
FA201R	RECREATION BUILDING FIRE ALARM PLAN
FA201W	WAREHOUSE BUILDING FIRE ALARM PLAN

TELECOMMUNICATIONS

T020	SIGNAL SITE PLAN - SOUTH
T021	SIGNAL SITE PLAN - NORTH
T050	FACEPLATE DETAILS
T051	DETAILS
T052	TECHNOLOGY SINGLE LINE DIAGRAM
T053	CCTV SINGLE LINE DIAGRAM
T054	ACCESS SINGLE LINE DIAGRAM
T055	SECURITY CAMERA DETAILS
T056	SECURITY DOOR HARDWARE DETAILS
T057	LV DETAILS

FOOD SERVICE / LAUNDRY

FS-111	FOOD SERVICE EQUIPMENT PLAN
FS-112	FOOD SERVICE BUILDING CONDITIONS & VENTILATION PLAN
FS-113	FOOD SERVICE PLUMBING ROUGH-IN PLAN
FS-114	FOOD SERVICE ELECTRICAL ROUGH-IN PLAN
FS-211	FOOD SERVICE ELEVATIONS
FS-212	FOOD SERVICE ELEVATIONS
FS-213	FOOD SERVICE ELEVATIONS
FS-214	FOOD SERVICE MANUFACTURER DRAWING - EXHAUST HOOD
FS-215	FOOD SERVICE MANUFACTURER DRAWING - FIRE SUPPRESSION
FS-216	FOOD SERVICE MANUFACTURER DRAWING - DEMANDAIRE
FS-217	FOOD SERVICE MANUFACTURER DRAWING - UTILITY WALL
FS-218	FOOD SERVICE MANUFACTURER DRAWING - REFRIGERATION
FS-219	FOOD SERVICE MANUFACTURER DRAWING - REFRIGERATION
LS-111	LAUNDRY EQUIPMENT PLAN

SHEET COUNT: 469

IDENTIFICATION STAMP
DIV. OF THE STATE ARCHITECT
APP: 02-118630 INC:
REVIEWED FOR
SS ☐ FLS ☐ ACS ☑
DATE: 04/13/2021

OFFICE OF THE STATE FIRE MARSHAL
APPROVED FIRE AND PANIC ONLY
Approval of this plan does not authorize or approve any omission or deviation from applicable regulations. Final approval is subject to field inspection. One set of approved plans shall be available on the project site at all times.
PERMIT NO.: 20-N-2332-CP
REVIEWED BY: LITO CATAYLO, OSFM
DATE: 4/ 1 /2021

GENERAL SERVICES
Department of General Services
State of California
Real Estate Services Division
Project Management & Development Branch
707 Third Street, Suite 4-105
West Sacramento, California 95605

NICHOLS MELBURG & ROSSETTO
ARCHITECTS + ENGINEERS
300 Knollcrest Drive
Redding, CA. 96002
(530) 222-3300 (530) 222-3538 FAX
http://www.nmrdesign.com

Copyright © 2020
All ideas, designs, arrangements and plans indicated or represented by this drawing are owned by, and the property of, NICHOLS, MELBURG and ROSSETTO and were created, evolved and developed for use on, and in conjunction with, the specified project. None of such ideas, designs, arrangements or plans shall be used by, or disclosed to any person, firm or corporation for any purpose whatsoever without the written permission of NICHOLS, MELBURG and ROSSETTO.

LICENSE STAMPS

LICENSED ARCHITECT
KYLE MATTI
C 27504
REN. 10/31/21
STATE OF CALIFORNIA

CONSULTANT

DRAWING STATUS
CONSTRUCTION DOCUMENTS

ISSUE

No.	Date	Description
1	10/20/2020	INITIAL PLAN REVIEW
2	01/22/2021	AGENCY RESUBMITTAL
3	03/22/2021	AGENCY RESUBMITTAL

If drawing is not 30" x 42" it is a reduced print

PROJECT
RESIDENTIAL CENTER, UKIAH: REPLACEMENT OF EXISTING RESIDENTIAL CENTER
440 EAST HILL ROAD
WILLITS, CALIFORNIA 95490
MENDOCINO COUNTY
CALIFORNIA CONSERVATION CORP

Supervisor	Designed	Drawn
KJM	DMH	DMH

DSA Application No.
02-118630

SHEET TITLE
SHEET INDEX

DGS Project Number 000000000001826
NMR Project Number 18-6456

Reference North — NORTH
Sheet Scale
Sheet Number
G002

ISSUE DATE
July 9, 2021

Plot Date: 3/26/2021 12:46:51 PM
File Name: BIM 360://CCC Willits Residential Center/A_CCC-WRC-COMMON.rvt

ABBREVIATIONS

⊥	PERPENDICULAR
∠	ANGLE
#	NUMBER/POUNDS
&	AND
@	AT
℄	CENTERLINE
Ø	DIAMETER OR ROUND
PL	PROPERTY LINE
[	CHANNEL
⌗	SQUARE FEET
ABV.	ABOVE
A.B.	ANCHOR BOLT
A.C.P.	ASPHALTIC CONCRETE PAVING
A.D.	AREA DRAIN
A.P.	ACCESS PANEL
A/C	AIR CONDITIONING
ABBR.	ABBREVIATION
ACP	ACOUSTIC CEILING PANEL
ACT	ACOUSTIC TILE
ACOUS.	ACOUSTICAL
ADHV.	ADHESIVE
ADJ.	ADJUSTIBLE
AFD	AUTOMATIC FIRE DAMPER
AESS	ARCHITECTURAL EXPOSED STRUCTURAL STEEL
AFF	ABOVE FINISH FLOOR
AGG	AGGREGATE
ALT.	ALTERNATE
ALUM.	ALUMINUM
ANOD.	ANODIZED
APPROX.	APPROXIMATELY
ARCH.	ARCHITECTURAL
ASSY.	ASSEMBLY
AUTO.	AUTOMATIC
B.W.	BOTH WAYS
BD.	BOARD
BHMS	BUGLE HEAD METAL SCREW
BITUM.	BITUMINOUS
BLDG.	BUILDING
BLK.	BLOCK
BLKG.	BLOCKING
BM.	BEAM
BOT.	BOTTOM
BOW.	BACK OF WALK
BTWN.	BETWEEN
BUR.	BUILT-UP ROOFING
C.B.	CATCH BASIN / CODE BLUE
C.BD.	CHALK BOARD
C.F.C.I.	CONTRACTOR FURNISHED CONTRACTOR INSTALLED
C.G.	CORNER GUARD
C.H.	CLOTHES HOOK
C.I.	CAST IRON
C.J.	CONTROL JOINT/ CONSTRUCTION JOINT
℄	CENTER LINE
C.O.	CLEANOUT
C.S.	CUP SINK
CW.	COLD WATER
CAB.	CABINET
CEM.	CEMENT
CER.	CERAMIC
CHAN.	CHANNEL
CLG.	CEILING
CLKG.	CAULKING
CLOS.	CLOSET
CLR.	CLEAR
CMU.	CONCRETE MASONARY UNIT
CNTR.	COUNTER
COL.	COLUMN
COMPO.	COMPOSITION
CONC.	CONCRETE
COND.	CONDITION
CONF.	CONFERENCE
CONN.	CONNECTION
CONST.	CONSTRUCTION
CONT.	CONTINUOUS
CONTR.	CONTRACTOR
CORR.	CORRIDOR
CO_2	CARBON DIOXIDE
CPT.	CARPET
CTR.	CENTER
CTSK.	COUNTERSUNK
D.	DEEP
D.F.	DRINKING FOUNTAIN/
D.O.	DOOR OPENING
D.S.	DOWN SPOUT
D.S.P.	DRY STAND PIPE
D/W	DISHWASHER
DBL.	DOUBLE
DEPT.	DEPARTMENT
DET.	DETAIL
DIA.	DIAMETER
DIAG.	DIAGONAL
DIFF.	DIFFUSER
DIM.	DIMENSION
DISP.	DISPOSAL
DN.	DOWN
DR.	DOOR
DWG.	DRAWING
DRW.	DRAWER
(E)	EXISTING
E.	EAST
E.J.	EXPANSION JOINT
E.P.	ELECTRICAL PANEL
E.W.	EACH WAY
EA.	EACH
EL.	ELEVATION
ELEC.	ELECTRICAL
ELEV.	ELEVATOR
EMER.	EMERGENCY
ENCL.	ENCLOSURE
EQ.	EQUAL
EQPT.	EQUIPMENT
EXH.	EXHAUST
EXP.	EXPANSION
EXPO.	EXPOSED
EXST'G	EXISTING
EXT.	EXTERIOR

F.	FIXED
F.A.	FIRE ALARM
F.B.	FLAT BAR
F.C.O.	FLOOR CLEAN OUT
F.D.	FLOOR DRAIN
F.E.	FIRE EXTINGUISHER
F.E.C.	FIRE EXTINGUISHER CABINET
F.F.	FINISH FLOOR
F.G.	FINISH GRADE
F.H.W.S.	FLAT HEAD WOOD SCREW
F.L.	FLOW LINE
F.S.	FLOOR SINK
F/F	FACE TO FACE
FDN.	FOUNDATION
FIN.	FINISH
FIXT.	FIXTURE
FLASG.	FLASHING
FLR.	FLOOR
FLUOR.	FLUORESCENT
F.O.	FINISH OPENING
FOC.	FACE OF CONCRETE
FOF.	FACE OF FINISH
FOM.	FACE OF MASONRY
FOS.	FACE OF STUD
FPRF.	FIREPROOF
FT.	FOOT OR FEET
FTG.	FOOTING
FURN.	FURNISH(ED)
FURR.	FURRING
FUT.	FUTURE
F.V.	FIELD VERIFY
G.	GAS (FUEL)
G.B.	GRAB BAR
G.F.I.	GROUND FAULT INTERRUPT
G.I.	GALVANIZED IRON
G.L.B.	GLU-LAM BEAM
GA.	GAUGE
GALV.	GALVANIZED
GEN.	GENERAL
GL.	GLASS
GND.	GROUND
GR.	GRADE
GYP.	GYPSUM
GYP.BD.	GYPSUM BOARD
GFRC.	GLASS FIBER REINFORCED CONCRETE
H.	HIGH
H.B.	HOSE BIBB
H.C.	HOLLOW CORE
H.M.	HOLLOW METAL
H.P.	HIGH POINT
HD.	HARD
HDWD.	HARDWOOD
HDWR.	HARDWARE
HGT.	HEIGHT
HORIZ.	HORIZONTAL
HR.	HOUR
H.S.S.	HOLLOW STRUCTURAL SECTION
HVAC.	HEATING VENTILATING & AIR CONDITIONING
HW	HOT WATER
IDF	INTERMEDIATE DISTRIBUTION FRAME
I.D.	INSIDE DIAMETER (DIMENSION)
IN.	INCH
INSUL.	INSULATION
INT.	INTERIOR
INV.	INVERT
JAN.	JANITOR
JST.	JOIST
JT.	JOINT
KIT.	KITCHEN
L.	LENGTH
L.H.	LEFT HAND
L.P.	LOW POINT
LAB.	LABORATORY
LAM.	LAMINATE
LAND.	LANDSCAPED
LAV.	LAVATORY
LBS.	POUNDS
LGT.	LIGHT
LIN.	LINEN
LKR.	LOCKER
LN_2	LIQUID NITROGEN
M.B.	MACHINE BOLT
MDF	MAIN DISTRIBUTION FRAME
M.H.	MAN HOLE
M.L.	METAL LATH
M.O.	MASONRY OPENING
MACH.	MACHINE
MAINT.	MAINTENANCE
MAS.	MASONRY
MAX.	MAXIMUM
MECH.	MECHANICAL
MEMB.	MEMBRANE
MTL.	METAL
MEZZ.	MEZZANINE
MFR.	MANUFACTURER
MIN.	MINIMUM/ MINUTE
MIR.	MIRROR
MISC.	MISCELLANEOUS
MON.	MONITOR
MOS.	MOSAIC
MTD.	MOUNTED
MATL.	MATERIAL
MUL.	MULLION

N.	NORTH
N.G.	NATURAL GAS
N.I.C.	NOT IN CONTRACT
N.T.S.	NOT TO SCALE
NAT.	NATURAL
NO.	NUMBER
NOM.	NOMINAL
N.I.T.E.	NOT IN TRUE ELEVATION
O.	OWNER
O.A.	OVERALL
O.C.	ON CENTER
O.D.	OUTSIDE DIAMETER (DIMENSION)
O.F.C.I.	OWNER FURNISHED/ CONTRACTOR INSTALLED
O.F.D.	OVERFLOW DRAIN
O.F.O.I.	OWNER FURNISHED/ OWNER INSTALLED
O/	OVER
OBS.	OBSCURE
OFF.	OFFICE
OPNG.	OPENING
OPP.	OPPOSITE
O.T.S.	OPEN TO STRUCTURE
P.	PANTRY
P.LAM.	PLASTIC LAMINATE
P.C.	PRECAST CONCRETE
P.D.	PHYSICALLY DISABLED
P.O.C.	POINT OF CONNECTION
P.T.D.	PAPER TOWEL DISPENSER
P.T.R.	PAPER TOWEL RECEPTACLE
P.W.	PASS WINDOW
PART.	PARTITION
PASS.	PASSENGER
PERF.	PERFORATED
PERIM.	PERIMETER
PL.	PLATE
PLAS.	PLASTER
PLBG.	PLUMBING
PLYWD.	PLYWOOD
PNT	PAINT(ED)
POL.	POLISHED
PR.	PAIR
PROJ.	PROJECTION/PROJECT
PT.	POINT/PAINT
PVC.	POLY-VINYL CHLORIDE
Q.T.	QUARRY TILE
R.	RISER
R.A.	RETURN AIR
RAD.	RADIUS
R.D.	ROOF DRAIN
R.D.L.	ROOF DRAIN LEADER
R.H.	RIGHT HAND
R.H.M.	ROUND HEAD METAL SCREW
R.H.W.S.	ROUND HEAD WOOD SCREW
RECEPT.	RECEPTION/IST
RECPT.	RECEPTACLE
RECT.	RECTANGULAR
REF.	REFERENCE
REFRIG.	REFRIGERATOR
REG.	REGISTER
REINF.	REINFORCEMENT
REQD.	REQUIRED
RESIL.	RESILIENT
RET.	RETURN
REV.	REVERSE
RM.	ROOM
RMS.	ROOMS
R.O.	ROUGH OPENING
R.V.B.	RECESSED VALVE BOX
RWD.	REDWOOD
RWL.	RAIN WATER LEADER
S.A.	SUPPLY AIR
SAF	SELF ADHESIVE FLASHING
S.C.	SOLID CORE
S.C.D.	SEAT COVER DISPENSER
S.D.	SOAP DISPENSER
S.L.	SCORE LINE
S.N.R.	SANITARY NAPKIN RECEPTACLE
S.N.V	SANITARY NAPKIN VENDOR
S.S.	STAINLESS STEEL
S.SK.	SERVICE SINK
SCHED.	SCHEDULE
SEC.	SECURITY
SECT.	SECTION
SFM.	STATE FIRE MARSHAL
SHT.	SHEET
SHTG.	SHEATHING
SHWR.	SHOWER
SH.	SHELF
SIM.	SIMILAR
SL.	SLOPE
SPEC.	SPECIFICATIONS
SQ.	SQUARE
STA.	STATION
STD.	STANDARD
STL.	STEEL
STOR.	STORAGE
STRUCT.	STRUCTURAL
SUSP.	SUSPENDED
SYM.	SYMMETRICAL
SMS.	SHEET METAL SCREW

T.	TREAD/TOP
T.&G.	TONGUE AND GROOVE
T.BD.	TACK BOARD
T.B.	TOWEL BAR
T.C.	TOP OF CURB
T.D.	TOP OF DECK
T.P.D.	TOILET PAPER DISPENSER
T.PL.	TOP OF PLATE
TEL.	TELEPHONE
TEMP.	TEMPERED
TERR.	TERRAZZO
THK.	THICK
TOC.	TOP OF CONCRETE
TOIL.	TOILET
TOP.	TOP OF PAVEMENT/PARAPET
TOP.	TOP OF PLATE
TOS.	TOP OF SLAB
TR.	TREATMENT
TRANS.	TRANSFORMER
TW.	TOP OF WALL
TYP.	TYPICAL
TV.	TELEVISION
U.	UNDER
U.G.	UNDERGROUND
U.L.	UNDERWRITER'S LABORATORY
U.O.N.	UNLESS OTHERWISE NOTED
U/C	UNDERCOUNTER
UNF.	UNFINISHED
UR.	URINAL
V.C.	VALUE CABINET
V.C.T.	VINYL COMPOSITION TILE
V.T.R.	VENT THROUGH ROOF
V.W.C.	VINYL WALL COVERING
V	VACUUM
VEND.	VENDING
VENT.	VENTILIATING
VERT.	VERTICAL
VEST.	VESTIBULE
W.	WEST/WIDE/WIDTH/WASTE/WALL
W/O	WITHOUT
W.C.	WATER CLOSET
W.H.	WATER HEATER
W.I.	WROUGHT IRON
W.I.C.	WOODWORK INSTITUTE OF CALIFORNIA
W.R.	WATER RESISTANT/ WASTE RECEPT.
W.S.	WOOD SCREW
W.S.P.	WET STANDPIPE
W.W.F.	WELDED WIRE FABRIC
W/	WITH
W/C	WHEELCHAIR
WD.	WOOD
WG.	WIRE GUARD/WIRE GLASS
WGT.	WEIGHT
WP.	WATERPROOF
WSCT.	WAINSCOT

SYMBOLS

NOTE: REFER TO INDIVIDUAL SHEETS FOR ADDITIONAL SYMBOLS AND LEGENDS

COLUMN LINE	A, 1 — NEW; A, 1 — EXISTING
BUILDING SECTION	1 / A603 — SECTION IDENTIFICATION; SHEET WHERE SECTION IS INDICATED
WALL SECTION	1 / A603 — SECTION IDENTIFICATION; SHEET WHERE SECTION IS INDICATED
ELEVATION	1 / A503 — ELEVATION IDENTIFICATION; SHEET WHERE ELEVATION IS INDICATED
INTERIOR ELEVATION	A, B, C, D / A501 — ELEVATION IDENTIFICATION; SHEET WHERE ELEVATION IS INDICATED
DETAIL SECTION	1 / A902, 1 / A901 — DETAIL IDENTIFICATION; SHEET WHERE DETAIL IS INDICATED
ELEVATION TAG	+X'-X" F.F. — HEIGHT ABOVE OR BELOW PROJECT DATUM
ENLARGED PLAN OR ELEVATION	1 / A701 — PLAN IDENTIFICATION; SHEET WHERE PLAN IS INDICATED; CIRCLED AREA SHOWN ON LARGE SCALE PLAN OR ELEVATION
KEYNOTE	22.100 — KEYNOTE NUMBER W/ LEADER
ROOM NAME & NUMBER	XXX / XXXX / XXX SF — ROOM NAME; ROOM NUMBER; AREA
CEILING HEIGHT	+9'-0" — CEILING HEIGHT (FLOOR TO FINISH CEILING)
ELEVATION RELATED TO PROJECT DATUM	EL. +12'-6" / FL. 2 — HEIGHT ABOVE OR BELOW PROJECT DATUM; FLOOR LEVEL
SPOT ELEVATION REFERENCE	(E) 0.00, 0.00 (N), 0.00 (N) (E) 0.00 — HEIGHT ABOVE PROJECT DATUM; REFERENCE LOCATION
NEW WALL W/ ASSEMBLY TYPE IDENTIFICATION	#-#-# / * - # — NEW WALL; ASSEMBLY TYPE - REFER TO SHEET G121
NEW DOOR	0136A — DOOR SUFFIX FOR MULTIPLE DOORS; ROOM NUMBER; NEW DOOR - SEE SHEET A710 FOR DOOR SCHEDULE
NEW WINDOW	A — WINDOW / GLAZING IDENTIFICATION; NEW WINDOW - SEE SHEET A720 FOR WINDOW SCHEDULE
LOUVER TAG	L# — LOUVER NUMBER - SEE SHEET A720 FOR TYPES
SIGNAGE TAG	X — SIGNAGE NUMBER - SEE SHEET A965 FOR SIGNAGE TYPES
CASEWORK REFERENCE	###X — CASEWORK IDENTIFICATION - SEE SHEET A940 FOR CASEWORK DETAILS
REVISION CLOUD W/ DELTA	1 — AREA REVISED; REVISION NUMBER
PROPERTY LINE	——— — — ———

FIRE SAFETY NOTES

1. ENSURE STREET ADDRESS NUMBERS AND/OR SUITE NUMBERS ARE POSTED IN A LOCATION VISIBLE FROM THE STREET. NUMBERS SHALL BE A MINIMUM OF 6" IN HEIGHT WITH A STROKE WIDTH APPROPRIATE FOR THE HEIGHT. NUMBERS SHALL BE OF A HIGHLY CONTRASTING COLOR COMPARED TO THE BACKGROUND ON WHICH THEY ARE APPLIED. NUMBERS PLACED ON GLASS SHALL HAVE A CONTRASTING COLOR APPLIED TO THE GLASS. CFC 505.1
2. ONE, 2-A, 10-BC MINIMUM RATED, FIRE EXTINGUISHER IS REQUIRED FOR EACH 3,000 SQUARE FEET OF FLOOR SPACE OR PORTION THEREOF. MAXIMUM TRAVEL DISTANCE TO ANY ONE FIRE EXTINGUISHER IS NOT EXCEED 75 FEET. MOUNT THE FIRE EXTINGUISHERS SO THAT THE TOPS ARE NO MORE THAN 48" OFF THE FLOOR. ACCESSIBILITY STANDARD 11B-308.2
3. TAMPER SWITCHES SHALL BE PLACED ON ALL VALVES CONTROLLING THE WATER SUPPLY TO THE AUTOMATIC FIRE SPRINKLER SYSTEM. VALVES CONTROLLING WATER SUPPLY SHALL INCLUDE: P.I.V., O.S.&Y. ON THE DOUBLE DETECTOR CHECK VALVES ON THE FIRE SPRINKLER RISER, OR ANY OTHER VALVE CONTROLLING THE WATER SUPPLY. CFC 903.4
4. THE WATER FLOW SWITCH FOR THE AUTOMATIC FIRE SPRINKLER SYSTEM SHALL BE MONITORED BY A UL LISTED CENTRAL MONITORING STATION OR OTHER APPROVED MONITORING STATION. CFC 903.4.1
5. ALL REQUIRED EXIT DOORS SHALL BE OPENABLE FROM THE INSIDE WITHOUT THE USE OF A KEY OR ANY SPECIAL KNOWLEDGE OR EFFORT. BOTH THE DEAD BOLT AND LATCH MUST RETRACT WITH A SINGLE-HAND MOTION. CBC 1008..1.9.5
6. INTERNALLY ILLUMINATED EXIT SIGNS, SHOWING THE PATHS OF TRAVEL AND THE EXITS, ARE REQUIRED TO BE PROVIDED PER CALIFORNIA BUILDING CODE SECTION 1011.1
7. EMERGENCY EGRESS ILLUMINATION, LIGHTING THE PATH TO EXITS, SHALL BE PROVIDED PER CALIFORNIA BUILDING CODE SECTION 1006.1
8. A KNOX BOX KEY BOX SHALL BE INSTALLED WITHIN 20 FEET OF THE MAIN ENTRANCE AT HEIGHT NO GREATER THAN 6 FEET. THIS WILL FACILITATE FIRE DEPARTMENT ACCESS IN THE EVENT OF A FIRE OR MEDICAL EMERGENCY. AN APPLICATION/MAIL ORDER FORM FOR THE KEY BOX CAN BE OBTAINED FROM FIRE DEPARTMENT ADMINISTRATION OFFICES. CFC 506.1
9. THIS BUILDING IS LIMITED IN USE TO THOSE LISTED OCCUPANCY TYPES. ANY CHANGE IN THE USE/OCCUPANCY REQUIRED REVIEW AND APPROVAL BY THE BUILDING DEPARTMENT. CBC 111.1.
10. THE MAXIMUM FLAME SPREAD CLASS OF FINISH MATERIALS USED ON INTERIOR WALLS AND CEILINGS SHALL NOT EXCEED CLASS B FOR EXITWAYS AND CLASS C FOR CORRIDORS, ROOMS OR AREAS PER TABLE 803.9 OF THE CALIFORNIA BUILDING CODE. CBC 803.1
11. IN ALL OCCUPANCIES, QUANTITIES AND COMBUSTIBLE LIQUIDS IN EXCESS OF 10 GALLONS USED FOR MAINTENANCE PURPOSES AND THE OPERATION OF EQUIPMENT SHALL BE STORED IN LIQUID STORAGE CABINETS IN ACCORDANCE WITH CFC 5704.3.2.
12. DUCT SMOKE DETECTORS REQUIRED WITHIN 5'-0" OF ALL FIRE/ SMOKE DAMPERS.
13. ALL DUCT DETECTORS SHALL BE CONNECTED TO BUILDING FIRE ALARM SYSTEM.
14. ALL WALLS THAT REQUIRE PROTECTED OPENINGS SHALL HAVE 5/8" THICK TYPE "X" GYPSUM BOARD ON BOTH SIDES U.O.N., CONTINUOUS FROM FLOOR TO UNDERSIDE OF ROOF/CEILING OR FLOOR/CEILING ABOVE.
15. BOX IN ALL RECESSED BOXES WITH GYPSUM BOARD OF THE THICKNESS AND TYPE PROVIDED BY THE WALL SYSTEM WHEN THEY ARE INSTALLED INTO FIRE RATED WALLS AND CEILINGS. EXCEPTION: BOXES NOT MORE THAN 16 SQ. IN. IN SURFACE AREA FOR A SUM TOTAL OF NOT MORE THAN 100 SQ. IN. IN ANY 100 SQ. FT. OF WALL SURFACE NEED NOT BE BOXED IN. SEE DETAIL 3/A961
16. AT WALLS INDICATED AS ONE-HOUR CONSTRUCTION, MAINTAIN ONE-HOUR FIRE RESISTIVE WALL CONSTRUCTION AT BUILT-IN FIXTURES SUCH AS FIRE EXTINGUISHERS, ELECTRICAL, MECHANICAL AND MEDICAL GAS ITEMS EXCEEDING 16 SQUARE INCHES IN AREA.
17. PENETRATING ITEMS PASSING ENTIRELY THROUGH BOTH PROTECTIVE MEMBRANES OF WALLS REQUIRED TO HAVE A FIRE-RESISTANCE RATING AND WALLS REQUIRING PROTECTED OPENINGS SHALL BE PROTECTED WITH THROUGH-PENETRATION FIRE STOPPING SUITABLE FOR THE METHOD OF PENETRATION PER CBC SECTION 714.
18. MARKING AND IDENTIFICATION - FIRE WALLS, FIRE BARRIERS, FIRE PARTITIONS, SMOKE BARRIERS AND SMOKE PARTITIONS OR ANY OTHER WALL REQUIRED TO HAVE PROTECTED OPENINGS OR PENETRATIONS SHALL BE EFFECTIVELY AND PERMANENTLY IDENTIFIED WITH SIGNS OR STENCILING. SUCH IDENTIFICATION SHALL:
    - 18.1. BE LOCATED IN ACCESSIBLE CONCEALED FLOOR, FLOOR-CEILING OR ATTIC SPACES;
    - 18.2. BE LOCATED WITHIN 15 FEET OF THE END OF EACH WALL AND AT INTERVALS NOT EXCEEDING 30 FEET MEASURED HORIZONTALLY ALONG THE WALL OR PARTITION; AND
    - 18.3. INCLUDED LETTERING NOT LESS THAN 3 INCHES IN HEIGHT WITH A MINIMUM 3/8" STROKE IN A CONTRASTING COLOR INCORPORATING THE SUGGESTED WORDING, "FIRE AND/OR SMOKE BARRIER - PROTECT ALL OPENINGS" OR OTHER WORDING. CBC SECTION 703.7
    - 18.4. EXCEPTION: WALLS IN GROUP R-2 OCCUPANCIES THAT DO NOT HAVE A REMOVABLE DECORATIVE CEILING ALLOWING ACCESS TO THE CONCEALED SPACE.

FIRE SAFETY DURING CONSTRUCTION & DEMOLITION

1. FIRE DEPARTMENT ACCESS ROADS SHALL BE ESTABLISHED AND MAINTAINED. CFC SECTION 3310.1.
2. AN APPROVED WATER SUPPLY FOR FIRE PROTECTION, EITHER TEMPORARY OR PERMANENT, SHALL BE MADE AVAILABLE AS SOON AS COMBUSTIBLE MATERIAL ARRIVES ON SITE. CFC SECTION 3312.1.
3. STRUCTURES UNDER CONSTRUCTION, ALTERATION OR DEMOLITION SHALL BE PROVIDED WITH NOT LESS THAN ONE APPROVED PORTABLE FIRE EXTINGUISHER IN ACCORDANCE WITH SECTION 906 AND SIZED FOR NOT LESS THAN ORDINARY HAZARD AS FOLLOWS (CFC SECTION 3315.1):
    - 3.1. AT EACH STAIRWAY ON ALL FLOOR LEVELS WHERE COMBUSTIBLE MATERIALS HAVE ACCUMULATED.
    - 3.2. IN EVERY STORAGE AND CONSTRUCTION SHED
    - 3.3. ADDITIONAL PORTABLE FIRE EXTINGUISHERS SHALL BE PROVIDED WHERE SPECIAL HAZARDS EXISTING INCLUDING, BUT NOT LIMITED TO, THE STORAGE AND USE OF FLAMMABLE AND COMBUSTIBLE LIQUIDS.
4. IN BUILDINGS REQUIRED TO HAVE STANDPIPES BY CFC SECTION 905.3.1, NOT LESS THAN ONE STANDPIPE SHALL BE PROVIDED FOR USE DURING CONSTRUCTION. CFC SEC. 3313.1.
5. COMBUSTIBLE DEBRIS SHALL NOT BE ALLOWED TO ACCUMULATE WITHIN THE BUILDING. CFC SEC. 3304.2.
6. CUTTING AND WELDING OPERATIONS SHALL BE IN ACCORDANCE WITH THE GENERAL SAFETY RULES OF CFC CH. 35.
7. SAFETY PRECAUTIONS INCLUDING FIRE DEPARTMENT ACCESS, WATER SUPPLY, NUMBER AND LOCATION OF HYDRANTS AND FIRE APPLIANCES SHALL BE APPROVED BY THE CSFM. CFC CHAPTER 5.
8. PROVIDE PEDESTRIAN PROTECTION AS NECESSARY AND AS REQUIRED BY THE CSFM.

GENERAL NOTES

1. ALL WORK AND MATERIALS SHALL BE IN FULL ACCORDANCE WITH ALL APPLICABLE ADOPTED ORDINANCES AND BUILDING AND FIRE PREVENTION CODES. REFER TO THESE DRAWINGS FOR A LIST OF KNOWN APPLICABLE CODES. ANY DISCREPANCIES BETWEEN THESE CODES AND THE CONSTRUCTION DOCUMENTS SHOULD IMMEDIATELY BE BROUGHT TO THE ATTENTION OF THE ARCHITECT. THE CONSTRUCTION DOCUMENTS SHALL NOT BE CONSTRUED AS TO PERMIT WORK THAT DOES NOT COMPLY WITH THESE CODES.
2. DIMENSIONS SHALL TAKE PRECEDENCE OVER ITEMS AS GRAPHICALLY DEPICTED IN THESE DRAWINGS. DIMENSIONS ARE TO FACE OF STUDS OR SLAB, AND TO CENTERLINES OF STEEL MEMBERS, UNLESS NOTED OTHERWISE ON DRAWINGS. DO NOT SCALE DRAWINGS. DIMENSIONS NOTED AS "CLEAR" (CLR) ARE TAKEN TO THE FACE OF FINISH MATERIALS. VERIFY DIMENSIONS OF PREFABRICATED AND MANUFACTURED ITEMS AND COORDINATE ROUGH OPENINGS ACCORDINGLY.
3. WHERE CONSTRUCTION DETAILS ARE NOT SHOWN OR NOTED FOR ANY PART OF THE WORK, THE DETAILS SHALL BE THE SAME AS FOR OTHER SIMILAR WORK SHOWN ON DRAWINGS. IF SIMILAR WORK IS NOT DETAILED IN DRAWINGS, WORK SHALL FOLLOW INDUSTRY STANDARDS AND MANUFACTURER'S RECOMMENDATIONS AS ACCEPTABLE TO THE ARCHITECT.
4. ALL CONSTRUCTION SHALL BE IN STRICT CONFORMANCE WITH MANUFACTURER'S LATEST PUBLISHED SPECIFICATIONS AND INSTRUCTIONS. ALL DISCREPANCIES BETWEEN THESE SPECIFICATIONS AND INSTRUCTIONS AND THE CONTRACT DOCUMENTS PREPARED BY THE ARCHITECT AND ITS CONSULTANTS, SHALL BE BROUGHT TO THE ATTENTION OF THE ARCHITECT IN WRITING PRIOR TO COMMENCING WORK.
5. VERIFY ALL DIMENSIONS, EXISTING UTILITY LOCATIONS, AND EXISTING CONDITIONS AFFECTED BY THE CONTRACT PRIOR TO STARTING CONSTRUCTION. ANY DISCREPANCIES OR INCONSISTENCIES FOUND SHALL BE BROUGHT TO THE ARCHITECT'S ATTENTION BEFORE WORK PROCEEDS.
6. ALL SUBCONTRACTORS ARE REQUIRED TO BE LICENSED WITH THE BUILDING DEPARTMENT.
7. AT WALLS INDICATED AS BEING OF FIRE-RATED CONSTRUCTION WHERE PROTECTION OF OPENINGS IS REQUIRED, MAINTAIN FIRE-RESISTIVE WALL CONSTRUCTION AT BUILT-IN FIXTURES AS REQUIRED BY APPLICABLE CODES.

CONTRACTOR NOTICE

1. THE CONSTRUCTION DOCUMENTS FOR THIS PROJECT ("CONSTRUCTION DOCUMENTS") INCLUDE THE DRAWINGS AND SPECIFICATIONS. BOTH ARE INTEGRAL COMPONENTS OF THE CONTRACT FOR CONSTRUCTION BETWEEN THE STATE ("OWNER") AND THE GENERAL CONTRACTOR ("CONTRACTOR").
2. IT IS THE INTENT OF THE CONSTRUCTION DOCUMENTS TO DESCRIBE A COMPLETE, FUNCTIONAL, CODE-COMPLIANT PROJECT TO BE CONSTRUCTED. THE CONSTRUCTION DOCUMENTS ARE COMPLEMENTARY, AND WHAT IS REQUIRED BY ANY PORTION SHALL BE AS BINDING AS IF REQUIRE BY ALL. WORK NOT SPECIFICALLY COVERED IN THE CONSTRUCTION DOCUMENTS SHALL NONETHELESS BE REQUIRED, IF IT IS CONSISTENT THEREWITH OR IS REASONABLY INFERABLE THEREFROM AS BEING NECESSARY OR APPROPRIATE TO PRODUCE THE INTENDED RESULTS.
3. ANYTHING MENTIONED IN THE SPECIFICATIONS BUT NOT SHOWN ON THE DRAWINGS, OR SHOWN ON THE DRAWINGS BUT NOT MENTIONED IN THE SPECIFICATIONS, SHALL BE OF LIKE EFFECT AS IF SHOWN OR MENTIONED IN BOTH.
4. THE CONSTRUCTION DOCUMENTS ARE INTENDED TO BE USED TOGETHER. IT IS THE RESPONSIBILITY OF THE CONTRACTOR TO PROVIDE ACCESS TO THE COMPLETE BID SET CONSTRUCTION DOCUMENTS PACKAGE, AND ANY ADDENDA THERETO, TO ANY AND ALL NECESSARY SUB-CONTRACTORS, MATERIAL OR EQUIPMENT SUPPLIERS, ETC., AS NECESSARY TO PROVIDE A COMPLETE, RESPONSIVE BID. THE USE OF ANY PORTION OF THE CONSTRUCTION DOCUMENTS IN THE ABSENCE OF THE COMPLETE PACKAGE SHALL BE AT THE SOLE RISK OF THE USER.
5. THE CONSTRUCTION DOCUMENTS APPLY IN THEIR ENTIRETY TO ALL CONTRACTOR FORCES. THE ARCHITECT AND ITS SUB-CONSULTANTS HAVE SHOWN VARIOUS PORTIONS OF THE WORK ON SEPARATE SHEETS AND/OR CLASSIFICATIONS OF DRAWINGS, AND HAVE SPECIFIED VARIOUS PORTIONS OF THE WORK IN SEPARATE SECTIONS OF THE SPECIFICATIONS. SUCH SEPARATIONS SHALL NOT BE CONSIDERED AS THE LIMITS OF THE WORK REQUIRED OF ANY SEPARATE TRADE. THE TERMS AND CONDITIONS OF SUCH LIMITS ARE WHOLLY BETWEEN THE CONTRACTOR AND ITS SUB-CONTRACTORS. THE COMPLETED PROJECT SHALL INCLUDE ALL WORK DEPICTED IN THE CONSTRUCTION DOCUMENTS. THE OWNER WILL CONSIDER THE CONTRACTOR AS THE SOLE PROVIDER OF ALL WORK NECESSARY TO COMPLETE THE PROJECT, TO THE EXTENT SUCH WORK IS REQUIRED BY OR REASONABLY INFERABLE FROM THE CONSTRUCTION DOCUMENTS.
6. SHOULD THE CONTRACTOR DISCOVER A CONFLICT, ERROR, OR DISCREPANCY IN THE CONSTRUCTION DOCUMENTS, HE/SHE SHALL IMMEDIATELY NOTIFY THE ARCHITECT IN WRITING, BEFORE PROCEEDING WITH ANY WORK AFFECTED THEREBY. PROCEEDING WITH ANY SUCH WORK WITHOUT FIRST GIVING SUCH TIMELY NOTICE SHALL CONSTITUTE A WAIVER BY THE CONTRACTOR OF ANY RELATED CLAIM(S) FOR ADDITIONAL TIME OR MONEY.
7. THE CONTRACTOR IS RESPONSIBLE FOR FORWARDING A COMPLETE SET OF ALL BUILDING, PLANNING, ETC. COMMENTS TO ARCHITECT WITHIN 24 HOURS OF RECEIVING SAME.
8. THE CONTRACTOR SHALL PROVIDE ALL MEASURE NECESSARY TO PROTECT THE STRUCTURE, WORKMEN, AND ALL OTHER PERSONS DURING CONSTRUCTION.

MECHANICAL NOTES

1. CONTRACTORS SHALL VERIFY AND MAINTAIN THE REQUIRED CLEARANCES AROUND INSTALLED EQUIPMENT.
2. SPRINKLER HEAD LOCATION AND LAYOUT TO BE REVIEWED AND ACCEPTED BY THE ARCHITECT PRIOR TO INSTALLATION.
3. THE CONTRACTOR SHALL PROVIDE ALL EQUIPMENT PADS AND STEEL BASES AS REQUIRED FOR MECHANICAL AND ELECTRICAL EQUIPMENT.
4. THE CONTRACTOR SHALL PROVIDE CONCEALED TYPE ACCESS PANELS (CONCEALED FASTENERS REQUIRED) FOR ELECTRICAL, MECHANICAL AND PLUMBING CONTROLS, VALVES, FIRE DAMPERS AND OTHER REQUIRED DEVICES. AT CEILINGS THESE PANELS SHALL BE 24" X 24" UNLESS OTHERWISE NOTED, FLUSH MOUNTED AND FIT WITHIN THE CEILING PATTERN. ACCESS PANELS SHALL HAVE A FIRE RESISTANCE RATING EQUAL TO OR GREATER THAN THE OPENING PROTECTION RATING OF THE ASSEMBLY IN WHICH IT IS INSTALLED. THE CONTRACTOR SHALL COORDINATE THE LOCATION OF THE ACCESS PANELS FOR ALL REQUIRED ITEMS. THE CONTRACTOR SHALL SUBMIT SHOP DRAWINGS I INDICATING THE EXACT LOCATIONS OF ALL ACCESS PANELS. NO INSTALLATIONS OF ACCESS PANELS SHALL BE MADE UNTIL THE ARCHITECT HAS APPROVED THE LOCATIONS.

STRUCTURAL NOTES

1. CUTTING, BORING, SAWCUTTING OR DRILLING THROUGH THE NEW OR EXISTING STRUCTURAL ELEMENTS TO BE DONE ONLY WHEN SO DETAILED IN DRAWINGS OR ACCEPTED BY THE STRUCTURAL ENGINEER.
2. STRUCTURAL SUPPORT AND/OR METAL REINFORCEMENT IN STUD WALLS SHALL BE PROVIDED AT ALL WALL-MOUNTED CASEWORK, CABINETS, SHELVING, EQUIPMENT ETC., BY GENERAL CONTRACTOR.
3. ALL EQUIPMENT, FIXED FURNISHINGS, ETC. SHALL BE SECURED BY THE CONTRACTOR IN A MANNER CONFORMING TO CBC REQUIREMENTS. IF NOT DETAILED HEREIN, SUBMIT THE METHOD OF ATTACHMENT TO THE ARCHITECT FOR APPROVAL PRIOR TO INSTALLATION.
4. THE CONTRACTOR SHALL PROVIDE MOUNTING PLATES AS REQUIRED BEHIND ALL WALL MOUNTED ITEMS SUCH AS HANDRAILS, TOILET PARTITIONS, LIGHT FIXTURES, EQUIPMENT, ETC.

ARCHITECT REVIEW

DRAWINGS AND/OR SPECIFICATIONS AND/OR CALCULATIONS FOR THE DISCIPLINES LISTED ON THIS SHEET (EXCLUDING ARCHITECTURAL) HAVE BEEN PREPARED BY OTHER DESIGN PROFESSIONALS OR CONSULTANTS WHO ARE LICENSED AND/OR AUTHORIZED TO PREPARE SUCH DRAWINGS IN THIS STATE.

THESE DOCUMENTS HAVE BEEN EXAMINED FOR DESIGN INTENT AND APPEAR TO MEET THE APPROPRIATE REQUIREMENTS OF TITLE 24, CALIFORNIA CODE OF REGULATIONS.

THESE DOCUMENTS HAVE BEEN COORDINATED WITH THE ARCHITECTURAL PLANS AND SPECIFICATIONS AND ARE ACCEPTABLE FOR INCORPORATION INTO THE CONSTRUCTION OF THIS PROJECT FOR WHICH I AM THE INDIVIDUAL DESIGNATED TO BE IN GENERAL RESPONSIBLE CHARGE (OR FOR WHICH I HAVE BEEN DELEGATED RESPONSIBILITY FOR THIS PORTION OF THE WORK).

SIGNATURE OF THE ARCHITECT — DATE: 3-24-2021

LICENCE NUMBER: C-27504 — EXP DATE: 10-31-2021

IDENTIFICATION STAMP
DIV. OF THE STATE ARCHITECT
APP: 02-118630 INC:
REVIEWED FOR
SS ☐ FLS ☐ ACS ☑
DATE: 04/13/2021

OFFICE OF THE STATE FIRE MARSHAL
APPROVED FIRE AND PANIC ONLY
Approval of this plan does not authorize or approve any omission or deviation from applicable regulations. Final approval is subject to field inspection. One set of approved plans shall be available on the project site at all times.
PERMIT NO.: 20-N-2332-CP
REVIEWED BY: LITO CATAYLO, OSFM
DATE: 3/ 1 /2021

GENERAL SERVICES
Department of General Services
State of California
Real Estate Services Division
Project Management & Development Branch
707 Third Street, Suite 4-105
West Sacramento, California 95605

NICHOLS MELBURG & ROSSETTO
ARCHITECTS + ENGINEERS
300 Knollcrest Drive
Redding, CA. 96002
(530) 222-3300 (530) 222-3538 FAX
http://www.nmrdesign.com

Copyright © 2020
All ideas, designs, arrangements and plans indicated or represented by this drawing are owned by, and the property of, NICHOLS, MELBURG and ROSSETTO and were created, evolved and developed for use on, and in conjunction with, the specified project. None of such ideas, designs, arrangements or plans shall be used by, or disclosed to any person, firm or corporation for any purpose whatsoever without the written permission of NICHOLS, MELBURG and ROSSETTO.

LICENSE STAMPS
LICENSED ARCHITECT — KYLE MATTI — C 27504 — REN. 10/31/21 — STATE OF CALIFORNIA

CONSULTANT

DRAWING STATUS
CONSTRUCTION DOCUMENTS

ISSUE

No.	Date	Description
1	10/20/2020	INITIAL PLAN REVIEW
2	01/22/2021	AGENCY RESUBMITTAL
3	03/22/2021	AGENCY RESUBMITTAL

If drawing is not 30" x 42" it is a reduced print

PROJECT
RESIDENTIAL CENTER, UKIAH: REPLACEMENT OF EXISTING RESIDENTIAL CENTER
440 EAST HILL ROAD
WILLITS, CALIFORNIA 95490
MENDOCINO COUNTY
CALIFORNIA CONSERVATION CORP

Supervisor	Designed	Drawn
KJM	DMH	KSK

DSA Application No. 02-118630

SHEET TITLE
GENERAL NOTES AND ABBREVIATIONS

DGS Project Number: 000000000001826 — NMR Project Number: 18-6456

Reference North — NORTH

Sheet Scale: 12" = 1'-0"

Sheet Number: G003

ISSUE DATE: July 9, 2021

Plot Date: 3/18/2021 3:24:49 PM
File Name: BIM 360://CCC Willits Residential Center/A_CCC-WRC-COMMON.rvt

2019 CALIFORNIA GREEN BUILDING STANDARDS CODE
NONRESIDENTIAL MANDATORY MEASURES

MANDATORY

CHAPTER 3
GREEN BUILDING

SECTION 301 GENERAL

301.1 SCOPE.

Buildings shall be designed to include the green building measures specified as mandatory in the application checklists contained in this code. Voluntary green building measures are also included in the application checklists and may be included in the design and construction of structures covered by this code, but are not required unless adopted by a city, county, or city and county as specified in Section 101.7.

301.3 NONRESIDENTIAL ADDITIONS AND ALTERATIONS. [BSC]

The provisions of individual sections of Chapter 5 apply to newly constructed buildings, building additions of 1,000 square feet or greater, and/or building alterations with a permit valuation of $200,000 or above (for occupancies within the authority of California Building Standards Commission). Code sections relevant to additions and alterations shall only apply to the portions of the building being added or altered within the scope of the permitted work.

A code section will be designated by a banner to indicate where the code section only applies to newly constructed building [N] or to additions and alterations [A]. When the code section applies to both, no banner will be used.

301.3.1 Nonresidential additions and alterations that cause updates to plumbing fixtures only:

Note: On and after January 1, 2014, certain commercial real property, as defined in Civil Code Section 1101.3, shall have its noncompliant plumbing fixtures replaced with appropriate water-conserving plumbing fixtures under specific circumstances. See Civil Code Section 1101.1 *et seq.* for definitions, types of commercial real property affected, effective dates, circumstances necessitating replacement of noncompliant plumbing fixtures, and duties and responsibilities for ensuring compliance.

301.3.2 Waste Diversion. The requirements of Section 5.408 shall be required for additions and alterations whenever a permit is required for work

301.4 PUBLIC SCHOOLS AND COMMUNITY COLLEGES. (see GBSC)
301.5 HEALTH FACILITIES. (see GBSC)

SECTION 302 MIXED OCCUPANCY BUILDINGS
302.1 MIXED OCCUPANCY BUILDINGS.

In mixed occupancy buildings, each portion of a building shall comply with the specific green building measures applicable to each specific occupancy.

SECTION 303 PHASED PROJECTS
303.1 PHASED PROJECTS.

For shell buildings and others constructed for future tenant improvements, only those code measures relevant to the building components and systems considered to be new construction (or newly constructed) shall apply.

303.1.1 Tenant improvements. The provisions of this code shall apply only to the initial tenant to a project. Subsequent tenant improvements shall comply with the scoping provisions in Section 301.3 non-residential additions and alterations.

ABBREVIATION DEFINITIONS:

HCD	Department of Housing and Community Development
BSC	California Building Standards Commission
DSA-SS	Division of the State Architect, Structural Safety
OSHPD	Office of Statewide Health Planning and Development
LR	Low Rise
HR	High Rise
AA	Additions and Alterations
N	New

CHAPTER 5
NONRESIDENTIAL MANDATORY MEASURES
DIVISION 5.1 PLANNING AND DESIGN

SECTION 5.101 GENERAL

5.101.1 Scope The provisions of this chapter outline planning, design and development methods that include environmentally responsible site selection, building design, building siting and development to protect, restore and enhance the environmental quality of the site and respect the integrity of adjacent properties.

SECTION 5.102 DEFINITIONS

5.102.1 DEFINITIONS The following terms are defined in Chapter 2 *(and are included here for reference)*

CUTOFF LUMINAIRES. Luminaires whose light distribution is such that the candela per 1000 lamp lumens does not numerically exceed 25 (2.5 percent) at an angle of 90 degrees above nadir, and 100 (10 percent) at a vertical angle of 80 degrees above nadir. This applies to all lateral angles around the luminaire.

LOW-EMITTING AND FUEL EFFICIENT VEHICLES. Eligible vehicles are limited to the following:

1. Zero emission vehicle (ZEV), including neighborhood electric vehicles (NEV), partial zero emission vehicle (PZEV), advanced technology PZEV (AT ZEV) or CNG fueled (original equipment manufacturer only) regulated under Health and Safety Code section 43800 and CCR, Title 13, Sections 1961 and 1962.
2. High-efficiency vehicles, regulated by U.S. EPA, bearing High-Occupancy Vehicle (HOV) car pool lane issued stickers by the Department of Motor Vehicles.

NEIGHBORHOOD ELECTRIC VEHICLE (NEV). A motor vehicle that meets the definition of "low-speed vehicle" either in Section 385.5 of the Vehicle Code or in 49CFR571.500 (as it existed on July 1, 2000), and is certified to zero-emission vehicle standards

TENANT-OCCUPANTS. Building occupants who inhabit a building during its normal hours of operation as permanent occupants, such as employees, as distinguished from customers and other transient visitors.

VANPOOL VEHICLE. Eligible vehicles are limited to any motor vehicle, other than a motortruck or truck tractor, designed for carrying more than 10 but not more than 15 persons including the driver, which is maintained and used primarily for the nonprofit work-related transportation of adults for the purpose of ridesharing.

Note: Source: Vehicle Code, Division 1, Section 668

ZEV. Any vehicle certified to zero-emission standards.

X

SECTION 5.106 SITE DEVELOPMENT

5.106.1 STORM WATER POLLUTION PREVENTION. Newly constructed projects and additions which disturb less than one acre of land and are not part of a larger common plan development or sale shall prevent the pollution of storm water runoff from the construction activities through one or more of the following measures:

5.106.1.1 Local ordinance. Comply with a lawfully enacted storm water management and/or erosion control ordinance.

5.106.1.2 Best Management Practices (BMP). Prevent the loss of soil through wind or water erosion by implementing an effective combination of erosion and sediment control and good housekeeping BMP.

1. Soil loss BMP that should be considered for each project include, but are not limited to, the following:

a. Scheduling construction activity during dry weather, when possible.
b. Preservation of natural features, vegetation, soil and buffers around surface waters.
c. Drainage swales or lined ditches to control stormwater flow.
d. Mulching or hydroseeding to stabilize disturbed soils.
e. Erosion control to protect slopes.
f. Protection of storm drain inlets (gravel bags or catch basin inserts).
g. Perimeter sediment control (perimeter silt fence, fiber rolls).
h. Sediment trap or sediment basin to retain sediment on site.
i. Stabilized construction exits.
j. Wind erosion control.
k. Other soil loss BMP acceptable to the enforcing agency.

2. Good housekeeping BMP to manage construction equipment, materials, non-stormwater discharges, and wastes that should be considered for implementation as appropriate for each project include, but are not limited to, the followoing:

a. Dewatering activities
b. Material handling and waste management.
c. Building materials stockpile management.
d. Management of washout areas (concrete, paints, stucco, etc.).
e. Control of vehicle/equipment fueling to contractor's staging area.
f. Vehicle and equipment cleaning performed off site.
g. Spill prevention and control
h. Other housekeeping BMP acceptable to the enforcing agency.

X

5.106.4 BICYCLE PARKING. For buildings within the authority of California Building Standards Commission as specified in Section 103, comply with Section 5.106.4.1. For buildings within the authority of the Division of the State Architect pursuant to Section 105, comply with Section 5.106.4.2

5.106.4.1 Bicycle parking. [BSC-CG] Comply with Sections 5.106.4.1.1 and 5.106.4.1.2; or meet the applicable local ordinance, whichever is stricter

5.106.4.1.1 Short-term bicycle parking. If the new project or an addition or alteration is anticipated to generate visitor traffic, provide permanently anchored bicycle racks within 200 feet of the visitors' entrance, readily visible to passers-by, for 5% of new visitor motorized vehicle parking spaces being added, with a minimum of one two-bike capacity rack.
Exception: Additions or alterations which add nine or less visitor vehicular parking spaces.

5.106.4.1.2 Long-term bicycle parking. For new buildings with tenent spaces that have 10 or more tenant-occupants, provide secure bicycle parking for 5 percent of tenant-occupant vehicular parking spaces with a minimum of one bicycle parking facility.

5.106.4.1.3 For additions or alterations that add 10 or more tenant-occupant vehicular parking spaces, provide secure bicycle parking for 5 percent of tenant-occupant vehicular parking spaces with a minimum of one bicycle parking facility.

5.106.4.1.4 For new shell buildings in phased projects provide secure bicycle parking for 5 percent of the anticipated tenant-occupant vehicular parking spaces with a minimum of one bicycle parking facility.

5.106.4.1.5 Acceptable parking facility for Sections 5.106.4.1.2, 5.106.4.1.3, and 5.106.4.1.4 shall be convenient from the street and shall meet one of the following:

1. Covered, lockable enclosures with permanently anchored racks for bicycles;
2. Lockable bicycle rooms with permanently anchored racks; or
3. Lockable, permanently anchored bicycle lockers.

Note: Additional information on recommended bicycle accommodations may be obtained from Sacramento Area Bicycle Advocates

MANDATORY

X

5.106.4.2 Bicycle parking. [DSA-SS] For public schools and community colleges, comply with Sections 5.106.4.2.1 & 5.106.4.2.2

5.106.4.2.1 Student bicycle parking. Provide permanently anchored bicycle racks conveniently accessed with a minimum of four two-bike capacity racks per new building.

5.106.4.2.2 Staff bicycle parking. Provide permanent, secure bicycle parking conveniently accessed with a minimum of two staff bicycle parking spaces per new building. Acceptable bicycle parking facilities shall be convenient from the street or staff parking area and shall meet one of the following:

1. Covered, lockable enclosures with permanently anchored racks for bicycles;
2. Lockable bicycle rooms with permanently anchored racks; or
3. 3. Lockable, permanently anchored bicycle lockers.

X

5.106.5.2 DESIGNATED PARKING FOR CLEAN AIR VEHICLES. In new projects or additions or alterations that add 10 or more vehicular parking spaces, provide designated parking for any combination of low-emitting, fuel-efficient and carpool/van pool vehicles as follows:

TABLE 5.106.5.2 - PARKING

TOTAL NUMBER OF PARKING SPACES	NUMBER OF REQUIRED SPACES
0-9	0
10-25	1
25-50	3
51-75	6
76-100	8
101-150	11
151-200	16
201 AND OVER	AT LEAST 8% OF TOTAL

5.106.5.2.1 - Parking stall marking. Paint, in the paint used for stall striping, the following characters such that the lower edge of the last word aligns with the end of the stall striping and is visible beneath a parked vehicle: CLEAN AIR / VAN POOL / EV

Note: Vehicles bearing Clean Air Vehicle stickers from expired HOV lane programs may be considered eligible for designated parking spaces.

X

5.106.5.3 Electric vehicle (EV) charging. [N] Construction shall comply with Section 5.106.5.3.1 or Section 5.106.5.3.2 to facilitate future installation of electric vehicle supply equipment (EVSE). When EVSE(s) is/are installed, it shall be in accordance with the *California Building Code,* the California Electrical Code (CEC) and as follows:

5.106.5.3.1 Single charging space requirements. [N] When only a single charging space is required per Table 5.106.5.3.3, a raceway is required to be installed at the time of construction and shall be installed in accordance with the California Electrical Code. Construction plans and specifications shall include, but are not limited to, the following:

1. The type and location of the EVSE.
2. A listed raceway capable of accommodating a 208/240 -volt dedicated branch circuit.
3. The raceway shall not be less than trade size 1."
4. The raceway shall originate at a service panel or a subpanel serving the area, and shall terminate in close proximity to the proposed location of the charging equipment and into a listed suitable cabinet, box, enclosure or equivalent.
5. The service panel or subpanel shall have sufficient capacity to accommodate a minimum 40-ampere dedicated branch circuit for the future installation of the EVSE.

5.106.5.3.2 Multiple charging space requirements. [N] When multiple charging spaces are required per Table 5.106.5.3.3 raceway(s) is/are required to be installed at the time of construction and shall be installed in accordance with the *California Electrical Code.* Construction plans and specifications shall include, but are not limited to, the following:

1. The type and location of the EVSE.
2. The raceway(s) shall originate at a service panel or a subpanel(s) serving the area, and shall terminate in close proximity to the proposed location of the charging equipment and into listed suitable cabinet(s), box(es), enclosure(s) or equivalent.
3. Plan design shall be based upon 40-ampere minimum branch circuits.
4. Electrical calculations shall substantiate the design of the electrical system, to include the rating of equipment and any on-site distribution transformers and have sufficient capacity to simultaneously charge all required EVs at its full rated amperage.
5. The service panel or subpanel(s) shall have sufficient capacity to accommodate the required number of dedicated branch circuit(s) for the future installation of the EVSE.

5.106.5.3.3 EV charging space calculations. [N] Table 5.106.5.3.3 shall be used to determine if single or multiple charging space requirements apply for the future installation of EVSE.

Exceptions: On a case-by-case basis where the local enforcing agency has determined EV charging and infrastructure is not feasible based upon one or more of the following conditions:

1. Where there is insufficient electrical supply.
2. Where there is evidence suitable to the local enforcing agency substantiating that additional local utility infrastructure design requirements, directly related to the implementation of Section 5.106.5.3, may adversely impact the construction cost of the project.

TABLE 5.106.5.3.3

TOTAL NUMBER OF PARKING SPACES	NUMBER OF REQUIRED SPACES
0-9	0
10-25	1
26-50	2
51-75	4
76-100	5
101-150	7
151-200	10
201 AND OVER	6% of total[1]

1. Calculation for spaces shall be rounded up to the nearest whole number.

5.106.5.3.4 [N] Identification. The service panel or subpanel(s) circuit directory shall identify the reserved overcurrent protective device space(s) for future EV charging as "EV CAPABLE". The raceway termination location shall be permanently and visibly marked as "EV CAPABLE".

5.106.5.3.5 [N] Future charging spaces qualify as designated parking as described in Section 5.106.5.2 Designated parking for clean air vehicles.

X

5.106.8 LIGHT POLLUTION REDUCTION. [N] Outdoor lighting systems shall be designed and installed to comply with the following:

1. The minimum requirements in the California Energy Code for Lighting Zones 0-4 as defined in Chapter 10, Section 10-114 of the California Administrative Code; and
2. Backlight (B) ratings as defined in IES TM-15-11 (shown in Table A-1 in Chapter 8);
3. Uplight and Glare ratings as defined in California Energy Code (shown in Table 130.2-A and 130.2-B in Chapter 8 and
4. Allowable BUG ratings not exceeding those shown in Table 5.106.8, or Comply with a local ordinance lawfully enacted pursuant to Section 101.7, whichever is more stringent.

Exceptions: [N]

1. Luminaires that qualify as exceptions in Section 140.7 of the California Energy Code.
2. Emergency lighting.
3. Building facade meeting the requirements in Table 140.7-B of the California Energy Code, Part 6.
4. Custom lighting features as allowed by the local enforcing agency, as permitted by Section 101.8 Alternate materials, designs and methods of construction.

Note:

1. **[N]** See also California Building Code, Chapter 12, Section 1205.7 for college campus lighting requirements for parking facilities and walkways.
2. Refer to Chaper 8 (Compliance Forms, Worksheets and Reference Material) for IEM TM-15-11 Table A-1, California Energy Code Tables 130.2-A and 130.2-B.
3. Refer to the California Energy Code for requirements for additions and alterations.

X

5.106.10 GRADING AND PAVING. Construction plans shall indicate how site grading or a drainage system will manage all surface water flows to keep water from entering buildings. Examples of methods to manage surface water include, but are not limited to, the following:

1. Swales.
2. Water collection and disposal systems
3. French drains.
4. Water retention gardens.
5. Other water measures which keep surface water away from buildings and aid in groundwater recharge.

Exception: Additions and alterations not altering the drainage path.

X

5.106.12 SHADE TREES. [DSA-SS] Shade trees shall be planted to comply with Sections 5.106.12.1, 5.106.12.2, and 5.106.12.3. Percentages shown shall be measured at noon on th esummer solstice. Landscape irragation necessary to establish and maintain tree health shall comply with Section 5.304.6.

5.106.12.1 Surface parking areas. Shade tree plantings, minimum #10 container size or equal, shall be installed to provide shade over 50% of the parking area within 15 years.
Exceptions: The surface parking area covered by solar photovoltaic shade structures, or shade structures, with roofing materials that comply with Table A5.106.11.2.2 in Appendix A5, are not included in the total area calculation.

5.106.12.2 Landscape areas. Shade tree plantings, minimum #10 container size or equal shall be installed to provide shade 20% of the landscape area within 15 years.
Exception: Playfileds for organized sport activity are not included in the total area calculation.

5.106.12.3 Hardscape areas. Shade tree plantings, minimum #10 container size or equal shall be installed to provide shade 20% of the landscape area within 15 years.
Exception: Walks, hardscape areas covered by solar photvoltaic shade streuctures, and hardscape ares covered by shade structures with roofing materials that comply with Table A5.106.11.2.2 in Appendix A5, are not included in the total area calculation.

MANDATORY

X

TABLE 5.106.8 [N] MAXIMUM ALLOWABLE BACKLIGHT, UPLIGHT AND GLARE(BUG) RATINGS[1,2]

ALLOWABLE RATING	LIGHTING ZONE LZ0	LIGHTING ZONE LZ1	LIGHTING ZONE LZ2	LIGHTING ZONE LZ3	LIGHTING ZONE LZ4
MAXIMUM ALLOWABLE BACKLIGHT RATING[3] (B)					
Luminaire greater than 2 mounting heights (MH) from property line	N/A	No Limit	No Limit	No Limit	No Limit
Luminaire back hemisphere is 1-2 MH from property line	N/A	B2	B3	B4	B4
Luminaire back hemisphere is 0.5-1 MH from property line	N/A	B1	B2	B3	B3
Luminaire back hemisphere is less than 0.5 MH from property line	N/A	B0	B0	B1	B2
MAXIMUM ALLOWABLE UPLIGHT RATING					
For area lighting[4]	N/A	U0	U0	U0	U0
For all other outdoor lighting, including decorative luminaires	N/A	U1	U2	U3	U4
MAXIMUM ALLOWABLE GLARE RATING[5]					
Luminaire greater than 2 MH from property line	N/A	G1	G2	G3	G4
Luminaire front hemisphere is 1-2 MH from property line	N/A	G0	G1	G1	G2
Luminaire front hemisphere is 0.5-1 MH from property line	N/A	G0	G0	G1	G1
Luminaire back hemisphere is less than 0.5 MH from property line	N/A	G0	G0	G0	G1

1. IESNA Lighting Zones 0 are not applicable; refer to Lighting Zones as defined in the *California Energy Code* and Chapter 10 of the *California Administrative Code.*

2. For property lines that abut public walkways, bikeways, plazas and parking lots, the property line may be considered to be 5 feet beyond the actual property line for purpose of determining compliance with this section. For property lines that abut public roadways and public transit corridors, the property line may be considered to be the centerline of the public roadway or public transit corridor for the purpose of determining compliance with this section.

3. If the nearest property line is less than or equal to two mounting heights from the back hemisphere of the luminaire distribution, the applicable reduced Backlight rating shall be met.

4. General lighting luminaires in areas such as outdoor parking, sales or storage lots shall meet these reduced ratings. Decorative luminaires located in these areas shall meet *U*-value limits for "all other outdoor lighting."

5. If the nearest property line is less than or equal to two mounting heights from the front hemisphere of the luminaire distribution, the applicable reduced Glare rating shall be met.

X

DIVISION 5.2 ENERGY EFFICIENCY

SECTION 5.201 GENERAL

5.201.1 Scope. *California Energy Code.* For the purposes of mandatory energy efficiency standards in this code, the California Energy Commission will continue to adopt mandatory building standards.

DIVISION 5.3 WATER EFFICIENCY AND CONSERVATION

SECTION 5.301 GENERAL

5.301.1 Scope. The provisions of this chapter shall establish the means of conserving water used indoors, outdoors and in wastewater conveyance.

SECTION 5.302 DEFINITIONS

5.302.1 Definitions. The following terms are defined in Chapter 2 *(and are included here for reference)*

EVAPOTRANSPIRATION ADJUSTMENT FACTOR (ETAF) [DSA-SS]. An adjustment factor when applied to reference evapotranspiration that adjusts for plant factors and irrigation efficiency, which ae two major influences on the amount of water that needs to be applied to the landscape.

FOOTPRINT AREA [DSA-SS]. The total area of the furthest exterior wall of the structure projected to natural grade, not including exterior areas such as stairs, covered walkways, patios and decks.

METERING FAUCET. A self-closing faucet that dispenses a specific volume of water for each actuation cycle. The volume or cycle duration can be fixed or adjustable.

GRAYWATER. Pursuant to Health and Safety Code Section 17922.12, "graywater" means untreated wastewater that has not been contaminated by any toilet discharge, has not been affected by infectious, contaminated, or unhealthy bodily wastes, and does not present a threat from contamination by unhealthful processing, manufacturing, or operating wastes. "Graywater" includes, but is not limited to wastewater from bathtubs, showers, bathroom washbasins, clothes washing machines and laundry tubs, but does not include waste water from kitchen sinks or dishwashers.

MODEL WATER EFFICIENT LANDSCAPE ORDINANCE (MWELO). The California ordinance regulating landscape design, installation and maintenance practices that will ensure commercial, multifamily and other developer installed landscapes greater than 2500 square feet meet an irrigation water budget developed based on landscaped area and climatological parameters.

MODEL WATER EFFICIENT LANDSCAPE ORDINANCE (MWELO). [HCD] The California model ordinance (California Code of Regulations, Title 23, Division 2, Chapter 2.7), regulating landscape design, installation and maintenance practices. Local agencies are required to adopt the updated MWELO, or adopt a local ordinance at least as effective as the MWELO.

POTABLE WATER. Water that is drinkable and meets the U.S. Environmental Protection Agency (EPA) Drinking Water Standards. See definition in the California Plumbing Code, Part 5.

POTABLE WATER. [HCD] Water that is satisfactory for drinking, culinary, and domestic puroses, and meets the U.S. Environmental Protection Agency (EPA) Drinking Water Standards and the requirements of the Health Authority Having Jurisdiction.

RECYCLED WATER. Water which, as a result of treatment of waste, is suitable for a direct beneficial use or a controlled use that would not otherwise occur [Water Code Section 13050 (n)]. Simply put, recycled water is water treated to remove waste matter attaining a quality that is suitable to use the water again.

SUBMETER. A meter installed subordinate to a site meter. Usually used to measure water intended for one purpose, such as landscape irrigation. For the purposes of CALGreen, a dedicated meter may be considered a submeter.

WATER BUDGET. Is the estimated total landscape irrigation water use which shall not exceed the maximum applied water allowance calculated in accordance with the Department of Water Resources Model Efficient Landscape Ordinance (MWELO).

MANDATORY

SECTION 5.303 INDOOR WATER USE

X

5.303.1 METERS. Separate submeters or metering devices shall be installed for the uses described in Sections 5.303.1.1 and 5.303.1.2.

5.303.1.1 New buildings or additions in excess of 50,000 square feet. Separate submeters shall be installed as follows:

1. For each individual leased, rented or other tenant space within the building projected to consume more than 100 gal/day (380 L/day), including, but not limited to, spaces used for laundry or cleaners, restaurant or food service, medical or dental office, laboratory, or beauty salon or barber shop.
2. Where separate submeters for individual building tenants are unfeasible, for water supplied to the following subsystems

a. Makeup water for cooling towers where flow through is greater than 500 gpm (30 L/s).
b. Makeup water for evaporative coolers greater than 6 gpm (0.04 L/s).
c. Steam and hot water boilers with energy input more than 500,000 Btu/h (147 kW).

5.303.1.2 Excess consumption. A separate submeter or metering device shall be provided for any tenant within a new building or within an addition that is projected to consume more than 1,000 gal/day.

X

5.303.3 WATER CONSERVING PLUMBING FIXTURES AND FITTINGS. Plumbing fixtures (water closets and urinals) and fittings (faucets and showerheads) shall comply with the following:

5.303.3.1 Water Closets. The effective flush volume of all water closets shall not exceed 1.28 gallons per flush. Tank-type water closets shall be certified to the performance criteria of the U.S. EPA WaterSense Specification for Tank-Type toilets.

Note: The effective flush volume of dual flush toilets is defined as the composite, average flush volume of reduced flushes and one full flush.

5.303.3.2 Urinals.
5.303.3.2.1 Wall-mounted urinals. Effective flush volume of wall-mounted urinals shall not exceed 0.125 gallons per flush.

5.303.3.2.2 Floor-mounted urinals. Effective flush volume of floor-mounted or other urinals shall not exceed 0.5 gallons per flush.

5.303.3.3 Showerheads.
5.303.3.3.1 Single showerhead. Showerheads shall have a maximum flow rate of not more than 1.8 gallons per minute at 80 psi. Showerheads shall be certified to the performance criteria of the U.S. EPA WaterSense Specification for Showerheads.

5.303.3.3.2 Multiple showerheads serving one shower. When a shower is served by more than one showerhead, the combined flow rate of all showerheads and/or other shower outlets controlled by a single valve shall not exceed 1.8 gallons per minute at 80 psi, or the shower shall be designed to allow only one shower outlet to be in operation at a time.

Note: A hand-held shower shall be considered a showerhead.

5.303.3.4 Faucets and fountains.
5.303.3.4.1 Nonresidential Lavatory faucets. Lavatory faucets shall have a maximum flow rate of not more than 0.5 gallons per minute at 60 psi

5.303.3.4.2 Kitchen faucets. Kitchen faucets shall have a maximum flow rate of not more than 1.8 gallons per minute at 60 psi. Kitchen faucets may temporarily increase the flow above the maximum rate, but not to exceed 2.2 gallons per minute at 60 psi, and must default to a maximum flow rate of 1.8 gallons per minute at 60 psi.

5.303.3.4.3 Wash fountains. Wash fountains shall have a maximum flow rate of not more than 1.8 gallons per minute/20 [rim space (inches) at 60 psi]

5.303.3.4.4 Metering faucets. Metering faucets shall not deliver more than 0.20 gallons per cycle.

5.303.3.4.5 Metering faucets for wash fountains. Metering faucets for wash fountains shall have a maximum flow rate of not more than 0.20 gallons per minute/20 [rim space (inches) at 60 psi].

Note: Where complying faucets are unavailable, aerators or other means may be used to achieve reduction.

X

5.303.4 COMMERCIAL KITCHEN EQUIPMENT.

5.303.4.1 Food Waste Disposers. Disposers shall either modulate the use of water to no more than 1 gpm when the disposer is not in use (not actively grinding food waste/no-load) or shall automatically shut off after no more than 10 minutes of inactivity. Disposers shall use no more than 8 gpm of water.

Note: This code section does not affect local jurisdiction authority to prohibit or require disposer installation.

5.303.5 AREAS OF ADDITION OR ALTERATION. For those occupancies within the authority of the California Building Standards Commission as specified in Section 103, the provisions of Section 5.303.3 and 5.303.4 shall apply to new fixtures in additions or areas of alteration to the building.

5.303.6 STANDARDS FOR PLUMBING FIXTURES AND FITTINGS. Plumbing fixtures and fittings shall be installed in accordance with the *California Plumbing Code*, and shall meet the applicable standards referenced in Table 1701.1 of the *California Plumbing Code* and in Chapter 6 of this code.

DISCLAIMER: THIS DOCUMENT IS PROVIDED AND INTENDED TO BE USED AS A MEANS TO INDICATE AREAS OF COMPLIANCE WITH THE 2019 CALIFORNIA GREEN BUILDING STANDARDS (CALGREEN) CODE. DUE TO THE VARIABLES BETWEEN BUILDING DEPARTMENT JURISDICTIONS, THIS CHECKLIST IS TO BE USED ON AN INDIVIDUAL PROJECT BASIS AND MAY BE MODIFIED BY THE END USER TO MEET THOSE INDIVIDUAL NEEDS. THE END USER ASSUMES ALL RESPONSIBILITY ASSOCIATED WITH THE USE OF THIS DOCUMENT, INCLUDING VERIFICATION WITH THE FULL CODE.

Plot Date: 3/18/2021 3:24:53 PM
File Name: BIM 360://CCC Willits Residential Center/A_CCC-WRC-COMMON.rvt

IDENTIFICATION STAMP
DIV. OF THE STATE ARCHITECT
APP: 02-118630 INC:
REVIEWED FOR
SS ☐ FLS ☐ ACS ☑
DATE: 04/13/2021

OFFICE OF THE STATE FIRE MARSHAL
APPROVED FIRE AND PANIC ONLY
Approval of this plan does not authorize or approve any omission or deviation from applicable regulations. Final approval is subject to field inspection. One set of approved plans shall be available on the project site at all times.
PERMIT NO.: 20-N-2332-CP
REVIEWED BY: LITO CATAYLO, OSFM
DATE: 4/ / /2021

GENERAL SERVICES
Department of General Services
State of California
Real Estate Services Division
Project Management & Development Branch
707 Third Street, Suite 4-105
West Sacramento, California 95605

NICHOLS MELBURG & ROSSETTO
ARCHITECTS + ENGINEERS
300 Knollcrest Drive
Redding, CA. 96002
(530) 222-3300 (530) 222-3538 FAX
http://www.nmrdesign.com

Copyright © 2020
All ideas, designs, arrangements and plans indicated or represented by this drawing are owned by, and the property of, NICHOLS, MELBURG and ROSSETTO and were created, evolved and developed for use on, and in conjunction with, the specified project. None of such ideas, designs, arrangements or plans shall be used by, or disclosed to any person, firm or corporation for any purpose whatsoever without the written permission of NICHOLS, MELBURG and ROSSETTO.

LICENSE STAMPS

LICENSED ARCHITECT
KYLE MATTI
C 27504
REN. 10/31/21
STATE OF CALIFORNIA

CONSULTANT

DRAWING STATUS
CONSTRUCTION DOCUMENTS

ISSUE

No.	Date	Description
1	10/20/2020	INITIAL PLAN REVIEW
2	01/22/2021	AGENCY RESUBMITTAL
3	03/22/2021	AGENCY RESUBMITTAL

If drawing is not 30" x 42" it is a reduced print

PROJECT
RESIDENTIAL CENTER, UKIAH: REPLACEMENT OF EXISTING RESIDENTIAL CENTER

440 EAST HILL ROAD
WILLITS, CALIFORNIA 95490
MENDOCINO COUNTY
CALIFORNIA CONSERVATION CORP

Supervisor	Designed	Drawn
KJM	DMH	NMR

DSA Application No.
02-118630

SHEET TITLE
CALGREEN CHECKLIST

DGS Project Number: 000000000001826
NMR Project Number: 18-6456

Reference North — NORTH

Sheet Scale: 12" = 1'-0"

Sheet Number: G010

ISSUE DATE
July 9, 2021

2019 CALIFORNIA GREEN BUILDING STANDARDS CODE
NONRESIDENTIAL MANDATORY MEASURES

MANDATORY	
X	**SECTION 5.304 OUTDOOR WATER USE** **5.304.1 OUTDOOR POTABLE WATER USE IN LANDSCAPE AREAS.** Nonresidential developments shall comply with a local water efficient landscape ordinance of the current California Department of Water Resources' Model Water Efficient Landscape Ordinance (MWELO), whichever is more stringent. **Notes:** 1. The Model Water Efficient Landscape Ordinance (MWELO) is located in the California Code of REgulations, Title 23, Chapter 2.7, Divison 2. 2. MWELO and supporting documents, including a water budget calculator, are available at https://www.water.ca.gov/.
N/A	**5.304.6 OUTDOOR POTABLE WATER USE IN LANDSCAPE AREAS.** For public schools and community colleges, landscape projects as described in Sections 5.304.6.1 and 5.304.6.2 shall comply with the California Department of Water Resources Model Water Efficient Landscape Ordinance (MWELO) commencing with Section 490 of Chapter 2.7, Division 2, Title 23, California Code of Regulations, except that the evapotranspiration adjustment factor (ETAF) shall be 0.65 with an additional water allowance for special landscape areas (SLA) of 0.35. Exception: Any project with an aggregate landscape area of 2,500 square feet or less may comply with the prescriptive measures contained in Appendix D of MWELO. **5.304.6.1 Newly constructed landscapes.** New construction projects with an aggregate landscape area equal to or greater than 500 square feet. **5.304.6.2 Rehabilitated landscapes.** Rehabilitated landscape projects with an aggregate landscape area equal to or greater than 1,200 square feet.
X	**DIVISION 5.4 MATERIAL CONSERVATION AND RESOURCE EFFICIENCY** **SECTION 5.401 GENERAL** **5.401.1 SCOPE.** The provisions of this chapter shall outline means of achieving material conservation and resource efficiency through protection of buildings from exterior moisture, construction waste diversion, employment of techniques to reduce pollution through recycling of materials, and building commissioning or testing and adjusting. **SECTION 5.402 DEFINITIONS** **5.402.1 DEFINITIONS.** The following terms are defined in Chapter 2 *(and are included here for reference)* **ADJUST.** To regulate fluid flow rate and air patterns at the terminal equipment, such as to reduce fan speed or adjust a damper. **BALANCE.** To proportion flows within the distribution system, including sub-mains, branches and terminals, according to design quantities. **BUILDING COMMISSIONING.** A systematic quality assurance process that spans the entire design and construction process, including verifying and documenting that building systems and components are planned, designed, installed, tested, operated and maintained to meet the owner's project requirements. **ORGANIC WASTE.** Food waste, green waste, landscape and pruning wste, nonhazardous wood waste, and food soiled paper waste that is mixed in with food waste. **TEST.** A procedure to determine quantitative performance of a system or equipment
X	**SECTION 5.407 WATER RESISTANCE AND MOISTURE MANAGEMENT** **5.407.1 WEATHER PROTECTION.** Provide a weather-resistant exterior wall and foundation envelope as required by California Building Code Section 1402.2 (Weather Protection), manufacturer's installation instructions or local ordinance, whichever is more stringent. **5.407.2 MOISTURE CONTROL.** Employ moisture control measures by the following methods. **5.407.2.1 Sprinklers.** Design and maintain landscape irrigation systems to prevent spray on structures. **5.407.2.2 Entries and openings**. Design exterior entries and/or openings subject to foot traffic or wind-driven rain to prevent water intrusion into buildings as follows: **5.407.2.2.1 Exterior door protection.** Primary exterior entries shall be covered to prevent water intrusion by using nonabsorbent floor and wall finishes within at least 2 feet around and perpendicular to such openings plus at least one of the following: 1. An installed awning at least 4 feet in depth. 2. The door is protected by a roof overhang at least 4 feet in depth. 3. The door is recessed at least 4 feet. 4. Other methods which provide equivalent protection. **5.407.2.2.2 Flashing.** Install flashings integrated with a drainage plane.
X	**SECTION 5.408 CONSTRUCTION WASTE REDUCTION, DISPOSAL AND RECYCLING** **5.408.1 CONSTRUCTION WASTE MANAGEMENT.** Recycle and/or salvage for reuse a minimum of 65% of the non-hazardous construction and demolition waste in accordance with Section 5.408.1.1, 5.408.1.2 or 5.408.1.3; or meet a local construction and demolition waste management ordinance, whichever is more stringent. **5.408.1.1 Construction waste management plan.** Where a local jurisdiction does not have a construction and demolition waste management ordinance, submit a construction waste management plan that: 1. Identifies the construction and demolition waste materials to be diverted from disposal by efficient usage, recycling, reuse on the project or salvage for future use or sale. 2. Determines if construction and demolition waste materials will be sorted on-site (source-separated) or bulk mixed (single stream). 3. Identifies diversion facilities where construction and demolition waste material collected will be taken. 4. Specifies that the amount of construction and demolition waste materials diverted shall be calculated by weight or volume, but not by both. **5.408.1.2 Waste Management Company.** Utilize a waste management company that can provide verifiable documentation that the percentage of construction and demolition waste material diverted from the landfill complies with this section. Note: The owner or contractor shall make the determination if the construction and demolition waste material will be diverted by a waste management company. **Exceptions to Sections 5.408.1.1 and 5.408.1.2:** 1. Excavated soil and land-clearing debris. 2. Alternate waste reduction methods developed by working with local agencies if diversion or recycle facilities capable of compliance with this item do not exist. 3. Demolition waste meeting local ordinance or calculated in consideration of loacl recycleing facilities and markets. **5.408.1.3 Waste stream reduction alternative.** The combined weight of new construction disposal that does not exceed two pounds per square foot of building area may be deemed to meet the 65% minimum requirement as approved by the enforcing agency. **5.408.1.4 Documentation.** Documentation shall be provided to the enforcing agency which demonstrates compliance with Sections 5.408.1.1, through 5.408.1.3. The waste management plan shall be updated as necessary and shall be accessible during construction for examination by the enforcing agency. **Notes:** 1. Sample forms found in "A Guide to the California Green Building Standards Code (Nonresidential)" located at www.bsc.ca.gov/Home/CALGreen.aspx may be used to assist in documenting compliance with the waste management plan. 2. Mixed construction and demolition debris processors can be located at the California Department of Resources Recycling and Recovery (CalRecycle).
N/A	**5.408.2 UNIVERSAL WASTE. [A]** Additions and alterations to a building or tenant space that meet the scoping provisions in Section 301.3 for nonresidential additions and alterations, shall require verification that Universal Waste items such as fluorescent lamps and ballast and mercury containing thermostats as well as other California prohibited Universal Waste materials are disposed of properly and are diverted from landfills. A list of prohibited Universal Waste materials shall be included in the construction documents. **Note**: Refer to the Universal Waste Rule link at: http://www.dtsc.ca.gov/LawsRegsPolicies/Regs/upload/OEAR-A_REGS_UWR_FinalText.pdf
N/A	**5.408.3 EXCAVATED SOIL AND LAND CLEARING DEBRIS.** 100 percent of trees, stumps, rocks and associated vegetation and soils resulting primarily from land clearing shall be reused or recycled. For a phased project, such material may be stockpiled on site until the storage site is developed. **Exception:** Reuse, either on or off-site, of vegetation or soil contaminated by disease or pest infestation. **Notes:** 1. If contamination by disease or pest infestation is suspected, contact the County Agricultural Commissioner and follow its direction for recycling or disposal of the material. 2. For a map of know pest and/or disease quarantine zones, consult with the California Department of Food and Agriculture. (www.cdfa.ca.gov)

MANDATORY	
X	**SECTION 5.410 BUILDING MAINTENANCE AND OPERATIONS** **5.410.1 RECYCLING BY OCCUPANTS.** Provide readily accessible areas that serve the entire building and are identified for the depositing, storage and collection of non-hazardous materials for recycling, including (at a minimum) paper, corrugated cardboard, glass, plastics, organic waste, and metals or meet a lawfully enacted local recycling ordinance, if more restrictive. **Exception**: Rural jurisdictions that meet and apply for the exemption in Public Resources Code 42649.82 (a)(2)(A) et seq. shall also be exempt from the organic waste portion of this section. **5.410.1.1 Additions.** All additions conducted within a 12-month period under single or multiple permits, resulting in an increase of 30% or more in floor area, shall provide recycling areas on site. **Exception**: Additions within a tenant space resulting in less than a 30% increase in the tenant space floor area. **5.410.1.2 Sample ordinance.** Space allocation for recycling areas shall comply with Chapter 18, Part 3, Division 30 of the *Public Resources Code*. Chapter 18 is known as the California Solid Waste Reuse and Recycling Access Act of 1991 (Act). **Note:** A sample ordinance for use by local agencies may be found in Appendix A of the document at the CalRecycle's web site.
X	**5.410.2 COMMISSIONING. [N]** For new buildings 10,000 square feet and over, building commissioning shall be included in the design and construction processes of the building project to verify that the building systems and components meet the owner's or owner representative's project requirements. Commissioning shall be performed in accordance with this section by trained personnel with experience on projects of comparable size and complexity. For I-occupancies that are not regulated by OSHPD or for I-occupancies and L-occupancies that are not regulated by the California Energy Code Section 100.0 Scope, all requirements in Sections 5.410.2 through 5.410.2.6 shall apply. **Note:** For energy- related systems, under the scope (Section 100) of the California Energy Code, including heating, ventilation, air conditioning (HVAC) systems and controls, indoor lighting systems and controls, as well as water heating systems and controls, refer to California Energy Code Section 120.5 for commissioning requirements. Commissioning requirements shall include: 1. Owner's or Owner representative's project requirements. 2. Basis of design. 3. Commissioning measures shown in the construction documents. 4. Commissioning plan. 5. Functional performance testing. 6. Documentation and training. 7. Commissioning report. **Exceptions:** 1. Unconditioned warehouses of any size. 2. Areas less than 10,000 square feet used for offices or other conditioned accessory spaces within unconditioned warehouses. 3. Tenant improvements less than 10,000 square feet as described in Section 303.1.1. 4. Open parking garages of any size, or open parking garage areas, of any size, within a structure. **Note:** For the purposes of this section, unconditioned shall mean a building, area, or room which does not provide heating and or air conditioning. **Informational Notes:** 1. IAS AC 476 is an accreditation criteria for organizations providing training and/or certification of commissioning personnel. AC 476 is available to the Authority Having Jurisdiction as a reference for qualifications of commissioning personnel. AC 476 des not certify individuals to conduct functional performance tests or to adjust and balance systems. 2. Functional performance testing for heating, ventilation, air conditioning systems and lighting controls must be performed in compliance with the *California Energy Code*.
X	**5.410.2.1 Owner's or Owner Representative's Project Requirements (OPR). [N]** The expectations and requirements of the building appropriate to its phase shall be documented before the design phase of the project begins. This documentation shall include the following: 1. Environmental and sustainability goals. 2. Building sustainability goals. 3. Environmental quality requirements. 4. Project program, including facility functions and hours of operation, and need for after hours operation. 5. Equipment and systems expectations. 6. Building occupant and operation and maintenance (O&M) personnel expectations. **5.410.2.2 Basis of Design (BOD). [N]** A written explanation of how the design of the building systems meets the OPR shall be completed at the design phase of the building project. The Basis of Design document shall cover the following systems: 1. Renewable energy systems. 2. Landscape irrigation systems. 3. Water reuse systems. **5.410.2.3 Commissioning plan. [N]** Prior to permit issuance a commissioning plan shall be completed to document how the project will be commissioned. The commissioning plan shall include the following: 1. General project information. 2. Commissioning goals. 3. Systems to be commissioned. Plans to test systems and components shall include: a. An explanation of the original design intent. b. Equipment and systems to be tested, including the extent of tests. c. Functions to be tested. d. Conditions under which the test shall be performed. e. Measurable criteria for acceptable performance. 4. Commissioning team information. 5. Commissioning process activities, schedules and responsibilities. Plans for the completion of commissioning shall be included. **5.410.2.4 Functional performance testing. [N]** Functional performance tests shall demonstrate the correct installation and operation of each component, system and system-to-system interface in accordance with the approved plans and specifications. Functional performance testing reports shall contain information addressing each of the building components tested, the testing methods utilized, and include any readings and adjustments made. **5.410.2.5 Documentation and training. [N]** A Systems Manual and Systems Operations Training are required, including Occupational Safety and Health Act (OSHA) requirements in *California Code of Regulations* (CCR), Title 8, Section 5142, and other related regulations. **5.410.2.5.1 Systems manual. [N]** Documentation of the operational aspects of the building shall be completed within the systems manual and delivered to the building owner or representative. The systems manual shall include the following: 1. Site information, including facility description, history and current requirements. 2. Site contact information. 3. Basic operations and maintenance, including general site operating procedures, basic troubleshooting, recommended maintenance requirements, site events log. 4. Major systems. 5. Site equipment inventory and maintenance notes. 6. A copy of verifications required by the enforcing agency or this code. 7. Other resources and documentation, if applicable. **5.410.2.5.2 Systems operations training. [N]** A program for training of the appropriate maintenance staff for each equipment type and/or system shall be developed and documented in the commissioning report and shall include the following: 1. System/equipment overview (what it is, what it does and with what other systems and/or equipment it interfaces). 2. Review and demonstration of servicing/preventive maintenance. 3. Review of the information in the Systems Manual. 4. Review of the record drawings on the system/equipment. **5.410.2.6 Commissioning report. [N]** A report of commissioning process activities undertaken through the design and construction phases of the building project shall be completed and provided to the owner or representative.
N/A	**5.410.4 TESTING AND ADJUSTING.** Testing and adjusting of systems shall be required for buildings less than 10,000 square feet or new systems to serve an addition or alteration subject to Section 303.1. **5.410.4.2 Systems.** Develop a written plan of procedures for testing and adjusting systems. Systems to be included for testing and adjusting shall include at a minimum, as applicable to the project: 1. Renewable energy systems. 2. Landscape irrigation systems. 3. Water reuse systems. **5.410.4.3 Procedures.** Perform testing and adjusting procedures in accordance with manufacturer's specifications and applicable standards on each system. **5.410.4.3.1 HVAC balancing.** In addition to testing and adjusting, before a new space-conditioning system serving a building or space is operated for normal use, the system shall be balanced in accordance with the procedures defined by the Testing Adjusting and Balancing Bureau National Standards; the National Environmental Balancing Bureau Procedural Standards; Associated Air Balance Council National Standards or as approved by the enforcing agency. **5.410.4.4 Reporting.** After completion of testing, adjusting and balancing, provide a final report of testing signed by the individual responsible for performing these services. **5.410.4.5 Operation and maintenance (O & M) manual.** Provide the building owner or representative with detailed operating and maintenance instructions and copies of guaranties/warranties for each system. O & M instructions shall be consistent with OSHA requirements in CCR, Title 8, Section 5142, and other related regulations. **5.410.4.5.1 Inspections and reports.** Include a copy of all inspection verifications and reports required by the enforcing agency.

MANDATORY	
X	**DIVISION 5.5 ENVIRONMENTAL QUALITY** **SECTION 5.501 GENERAL** **5.501.1 SCOPE.** The provisions of this chapter shall outline means of reducing the quantity of air contaminants that are odorous, irritating, and/or harmful to the comfort and well-being of a building's installers, occupants and neighbors. **SECTION 5.502 DEFINITIONS** **5.502.1 DEFINITIONS.** The following terms are defined in Chapter 2 *(and are included here for reference)* **ARTERIAL HIGHWAY.** A general term denoting a highway primarily for through traffic usually on a continuous route. **A-WEIGHTED SOUND LEVEL (dBA).** The sound pressure level in decibels as measured on a sound level meter using the internationally standardized A-weighting filter or as computed from sound spectral data to which A-weighting adjustments have been made. **1 BTU/HOUR.** British thermal units per hour, also referred to as Btu. The amount of heat required to raise one pound of water one degree Fahrenheit per hour, a common measure of heat transfer rate. A ton of refrigeration is 12,000 Btu, the amount of heat required to melt a ton (2,000 pounds) of ice at 320 Fahrenheit. **COMMUNITY NOISE EQUIVALENT LEVEL (CNEL).** A metric similar to the day-night average sound level (Ldn), except that a 5 decibel adjustment is added to the equivalent continuous sound exposure level for evening hours (7pm to 10pm) in addition to the 10 dB nighttime adjustment used in the Ldn. **COMPOSITE WOOD PRODUCTS.** Composite wood products include hardwood plywood, particleboard and medium density fiberboard. "Composite wood products" does not include hardboard, structural plywood, structural panels, structural composite lumber, oriented strand board, glued laminated timber, timber, prefabricated wood I–joists or finger–jointed lumber, all as specified in California Code of Regulations (CCR), Title 17, Section 93120.1(a). **Note:** See CCR, Title 17, Section 93120.1. **DAY-NIGHT AVERAGE SOUND LEVEL (Ldn).** The A-weighted equivalent continuous sound exposure level for a 24-hour period with a 10 dB adjustment added to sound levels occurring during nighttime hours (10p.m. to 7 a.m.). **DECIBEL (db).** A measure on a logarithmic scale of the magnitude of a particular quantity (such as sound pressure, sound power, sound intensity) with respect to a reference quantity. **ELECTRIC VEHICLE (EV).** An automotive-type vehicle for on-road use, such as passenger automobiles, buses, trucks, vans, neighborhood electric vehicles, electric motorcycles, and the like, primarily powered by an electric motor that draws current from a rechargeable storage battery, fuel cell, photovoltaic array, or other source of electric current. Plug-in hybrid electric vehicles (PHEV) are considered electric vehicles. For purposes of the *California Electrical Code*, off-road, self-propelled electric vehicles, such as industrial trucks, hoists, lifts, transports, golf carts, airline ground support equipment, tractors, boats, and the like, are not included. **ELECTRIC VEHICLE CHARGING STATION(S) (EVCS)).** One or more spaces intended for charging electric vehicles. **ELECTRIC VEHICLE SUPPLY EQUIPMENT (EVSE).** The conductors, including the ungrounded, grounded, and equipment grounding conductors and the electric vehicle connectors, attachment plugs, and all other fittings, devices, power outlets, or apparatus installed specifically for the purpose of transferring energy between the premises wiring and the electric vehicle. **ENERGY EQUIVALENT (NOISE) LEVEL (Leq).** The level of a steady noise which would have the same energy as the fluctuating noise level integrated over the time of period of interest. **EXPRESSWAY.** An arterial highway for through traffic which may have partial control of access, but which may or may not be divided or have grade separations at intersections. **FREEWAY.** A divided arterial highway with full control of access and with grade separations at intersections. **GLOBAL WARMING POTENTIAL (GWP).** The radiative forcing impact of one mass-based unit of a given greenhouse gas relative to an equivalent unit of carbon dioxide over a given period of time. Carbon dioxide is the reference compound with a GWP of one. **GLOBAL WARMING POTENTIAL VALUE (GWP VALUE).** A 100-year GWP value published by the Intergovernmental Panel on Climate Change (IPCC) in either its Second Assessment Report (SAR) (IPCC, 1995); or its Fourth Assessment A-3 Report (AR4) (IPCC, 2007). The SAR GWP values are found in column "SAR (100-yr)" of Table 2.14.; the AR4 GWP values are found in column "100 yr" of Table 2.14. **HIGH-GWP REFRIGERANT.** A compound used as a heat transfer fluid or gas that is: (a) a chlorofluorocarbon, a hdrochlorofluorocarbon, a hydrofluorocarbon, a perfluorocarbon, or any compound or blend of compounds, with a GWP value equal to or greater than 150, or (B) any ozone depleting substance as defined in Title 40 of the Code of Federal Regulations, Part 82, sec.82.3 (as amended March 10, 2009), **LONG RADIUS ELBOW.** Pipe fitting installed between two lengths of pipe or tubing to allow a change of direction, with a radius 1.5 times the pipe diameter. **LOW-GWP REFRIGERANT.** A compound used as a heat transfer fluid or gas that: (A) has a GWP value less than 150, and (B) is not an ozone depleting substance as defined in Title 40 of the Code of Federal Regulations, Part 82, sec.82.3 (as amended March 10, 2009). **MERV.** Filter minimum efficiency reporting value, based on ASHRAE 52.2–1999. **MAXIMUM INCREMENTAL REACTIVITY (MIR).** The maximum change in weight of ozone formed by adding a compound to the "Base REactive Organic Gas (ROG) Mixture" per weight of compound added, expressed to hundreths of a gram (g O3/g ROC). **PRODUCT-WEIGHTED MIR (PWMIR).** The sum of all weighted-MIR for all ingredients in a product subject to this article. The PWMIR is the total product reactivity expressed to hundredths of a gram of ozone formed per gram of product (excluding container and packaging). **PSIG.** Pounds per square inch, guage. **REACTIVE ORGANIC COMPOUND (ROC).** Any compound that has the potential, once emitted, to contribute to ozone formation in the troposphere. **SCHRADER ACCESS VALVES.** Access fittings with a valve core installed. **SHORT RADIUS ELBOW.** Pipe fitting installed between two lengths of pipe or tubing to allow a change of direction, with a radius 1.0 times the pipe diameter. **SUPERMARKET**. For the purposes of Section 5.508.2, a supermarket is any retail food facility with 8,000 square feet or more conditioned area, and that utilizes either refrigerated display cases, or walk-in coolers or freezers connected to remote compressor units or condensing units. **VOC.** A volatile organic compound broadly defined as a chemical compound based on carbon chains or rings with vapor pressures greater than 0.1 millimeters of mercury at room temperature. These compounds typically contain hydrogen and may contain oxygen, nitrogen and other elements. See CCR Title 17, Section 94508(a) **Note:** Where specific regulations are cited from different agencies such as SCAQMD, ARB, etc., the VOC definition included in that specific regulation is the one that prevails for the specific measure in question.
X	**SECTION 5.503 FIREPLACES** **5.503.1 FIREPLACES.** Install only a direct-vent sealed-combustion gas or sealed wood-burning fireplace, or a sealed woodstove or pellet stove, and refer to residential requirements in the California Energy Code, Title 24, Part 6, Subchapter 7, Section 150. Woodstoves, pellet stoves and fireplaces shall comply with applicable local ordinances. **5.503.1.1 Woodstoves.** Woodstoves and pellet stoves shall comply with U.S. EPA New Source Performance Standards (NSPS) emission limits as applicable, and shall have a permanent label indicating they are certified to meet the emission limits.
X	**SECTION 5.504 POLLUTANT CONTROL** **5.504.1 TEMPORARY VENTILATION.** The permanent HVAC system shall only be used during construction if necessary to condition the building or areas of addition or alteration within the required temperature range for material and equipment installation. If the HVAC system is used during construction, use return air filters with a Minimum Efficiency Reporting Value (MERV) of 8, based on ASHRAE 52.2-1999, or an average efficiency of 30% based on ASHRAE 52.1-1992 Replace all filters immediately prior to occupancy, or, if the building is occupied during alteration, at the conclusion of construction. **5.504.3 Covering of duct openings and protection of mechanical equipment during construction.** At the time of rough installation, or during storage on the construction site and until final startup of the heating, cooling and ventilating equipment, all duct and other related air distribution component openings shall be covered with tape, plastic, sheet metal or other methods acceptable to the enforcing agency to reduce the amount of dust, water and debris which may enter the system.

DISCLAIMER: THIS DOCUMENT IS PROVIDED AND INTENDED TO BE USED AS A MEANS TO INDICATE AREAS OF COMPLIANCE WITH THE 2016 CALIFORNIA GREEN BUILDING STANDARDS (CALGREEN) CODE. DUE TO THE VARIABLES BETWEEN BUILDING DEPARTMENT JURISDICTIONS, THIS CHECKLIST IS TO BE USED ON AN INDIVIDUAL PROJECT BASIS AND MAY BE MODIFIED BY THE END USER TO MEET THOSE INDIVIDUAL NEEDS. THE END USER ASSUMES ALL RESPONSIBILITY ASSOCIATED WITH THE USE OF THIS DOCUMENT, INCLUDING VERIFICATION WITH THE FULL CODE.

Plot Date: 5/18/2021 3:24:56 PM
File Name: 318 300 /CAD Willits Residential Center/A_CCC-WRC-COMMON.rvt

IDENTIFICATION STAMP
DIV. OF THE STATE ARCHITECT
APP: 02-118630 INC:
REVIEWED FOR
SS ☐ FLS ☐ ACS ☑
DATE: 04/13/2021

OFFICE OF THE STATE FIRE MARSHAL
APPROVED FIRE AND PANIC ONLY
Approval of this plan does not authorize or approve any omission or deviation from applicable regulations. Final approval is subject to field inspection. One set of approved plans shall be available on the project site at all times.
PERMIT NO. 2019-2332-CP
REVIEWED BY: LEO CATAYLO, OSFM
DATE: 4/1/2021

DGS GENERAL SERVICES
Department of General Services
State of California
Real Estate Services Division
Project Management & Development Branch
707 Third Street, Suite 4-105
West Sacramento, California 95605

NICHOLS MELBURG & ROSSETTO
ARCHITECTS + ENGINEERS
300 Knollcrest Drive
Redding, CA. 96002
(530) 222-3300 (530) 222-3538 FAX
http://www.nmrdesign.com

Copyright © 2020
All ideas, designs, arrangements and plans indicated or represented by this drawing are owned by, and the property of, NICHOLS, MELBURG and ROSSETTO and were created, evolved and developed for use on, and in conjunction with, the specified project. None of such ideas, designs, arrangements or plans shall be used by, or disclosed to any person, firm or corporation for any purpose whatsoever without the written permission of NICHOLS, MELBURG and ROSSETTO

LICENSE STAMPS

LICENSED ARCHITECT KYLE MATTY C-32504 REN 10/31/21 STATE OF CALIFORNIA

CONSULTANT

DRAWING STATUS
CONSTRUCTION DOCUMENTS

ISSUE

No.	Date	Description
1	10/20/2020	INITIAL PLAN REVIEW
2	01/22/2021	AGENCY RESUBMITTAL
3	03/22/2021	AGENCY RESUBMITTAL

If drawing is not 30" x 42" it is a reduced print

PROJECT
RESIDENTIAL CENTER, UKIAH: REPLACEMENT OF EXISTING RESIDENTIAL CENTER
440 EAST HILL ROAD
WILLITS, CALIFORNIA 95490
MENDOCINO COUNTY
CALIFORNIA CONSERVATION CORP

Supervisor	Designed	Drawn
KJM	DMH	NMR

DSA Application No.
02-118630

SHEET TITLE
CALGREEN CHECKLIST

DGS Project Number: 000000000001826
NMR Project Number: 18-6456

Reference North: NORTH
Sheet Scale: 12" = 1'-0"
Sheet Number: G011

ISSUE DATE
July 9, 2021

2019 CALIFORNIA GREEN BUILDING STANDARDS CODE
NONRESIDENTIAL MANDATORY MEASURES

MANDATORY

X

5.504.4 FINISH MATERIAL POLLUTANT CONTROL. Finish materials shall comply with Sections 5.504.4.1 through 5.504.4.6.

5.504.4.1 Adhesives, sealants and caulks. Adhesives, sealants, and caulks used on the project shall meet the requirements of the following standards:

1. Adhesives, adhesive bonding primers adhesive primers, sealants, sealant primers and caulks shall comply with local or regional air pollution control or air quality management district rules where applicable, or SCAQMD Rule 1168 VOC limits, as shown in Tables 5.504.4.1 and 5.504.4.2. Such products also shall comply with the Rule 1168 prohibition on the use of certain toxic compounds (chloroform, ethylene dichloride, methylene chloride, perchloroethylene and trichloroethylene), except for aerosol products as specified in subsection 2, below.

2. Aerosol adhesives, and smaller unit sizes of adhesives, and sealant or caulking compounds (in units of product, less packaging, which do not weigh more than one pound and do not consist of more than 16 fluid ounces) shall comply with statewide VOC standards and other requirements, including prohibitions on use of certain toxic compounds, of *California Code of Regulations*, Title 17, commencing with Section 94507.

TABLE 5.504.4.1 - ADHESIVE VOC LIMIT 1,2

Less Water and Less Exempt Compounds in Grams per Liter

ARCHITECTURAL APPLICATIONS	CURRENT VOC LIMIT
INDOOR CARPET ADHESIVES	50
CARPET PAD ADHESIVES	50
OUTDOOR CARPET ADHESIVES	150
WOOD FLOORING ADHESIVES	100
RUBBER FLOOR ADHESIVES	60
SUBFLOOR ADHESIVES	50
CERAMIC TILE ADHESIVES	65
VCT & ASPHALT TILE ADHESIVES	50
DRYWALL & PANEL ADHESIVES	50
COVE BASE ADHESIVES	50
MULTIPURPOSE CONSTRUCTION ADHESIVES	70
STRUCTURAL GLAZING ADHESIVES	100
SINGLE-PLY ROOF MEMBRANE ADHESIVES	250
OTHER ADHESIVES NOT SPECIFICALLY LISTED	50
SPECIALTY APPLICATIONS	
PVC WELDING	510
CPVC WELDING	490
ABS WELDING	325
PLASTIC CEMENT WELDING	250
ADHESIVE PRIMER FOR PLASTIC	550
CONTACT ADHESIVE	80
SPECIAL PURPOSE CONTACT ADHESIVE	250
STRUCTURAL WOOD MEMBER ADHESIVE	140
TOP & TRIM ADHESIVE	250
SUBSTRATE SPECIFIC APPLICATIONS	
METAL TO METAL	30
PLASTIC FOAMS	50
POROUS MATERIAL (EXCEPT WOOD)	50
WOOD	30
FIBERGLASS	80

1. IF AN ADHESIVE IS USED TO BOND DISSIMILAR SUBSTRATES TOGETHER, THE ADHESIVE WITH THE HIGHEST VOC CONTENT SHALL BE ALLOWED.
2. FOR ADDITIONAL INFORMATION REGARDING METHODS TO MEASURE THE VOC CONTENT SPECIFIED IN THIS TABLE, SEE SOUTH COAST AIR QUALITY MANAGEMENT DISTRICT RULE 1168, www.arb.ca.gov/DRDB/SC/CURHTML/R1168.PDF

TABLE 5.504.4.2 - SEALANT VOC LIMIT

Less Water and Less Exempt Compounds in Grams per Liter

SEALANTS	CURRENT VOC LIMIT
ARCHITECTURAL	250
MARINE DECK	760
NONMEMBRANE ROOF	300
ROADWAY	250
SINGLE-PLY ROOF MEMBRANE	450
OTHER	420
SEALANT PRIMERS	
ARCHITECTURAL	
NONPOROUS	250
POROUS	775
MODIFIED BITUMINOUS	500
MARINE DECK	760
OTHER	750

NOTE: FOR ADDITIONAL INFORMATION REGARDING METHODS TO MEASURE THE VOC CONTENT SPECIFIED IN THESE TABLES, SEE SOUTH COAST AIR QUALITY MANAGEMENT DISTRICT RULE 1168.

X

5.504.4.3 Paints and coatings. Architectural paints and coatings shall comply with VOC limits in Table 1 of the ARB Architectural Coatings Suggested Control Measure, as shown in Table 5.504.4.3, unless more stringent local limits apply. The VOC content limit for coatings that do not meet the definitions for the specialty coatings categories listed in Table 5.504.4.3 shall be determined by classifying the coating as a Flat, Nonflat or Nonflat-High Gloss coating, based on its gloss, as defined in Subsections 4.21, 4.36 and 4.37 of the 2007 California Air Resources Board Suggested Control Measure, and the corresponding Flat, Nonflat or Nonflat-High Gloss VOC limit in Table 5.504.4.3 shall apply.

MANDATORY

X

TABLE 5.504.4.3 - VOC CONTENT LIMITS FOR ARCHITECTURAL COATINGS 2,3

GRAMS OF VOC PER LITER OF COATING, LESS WATER & LESS EXEMPT COMPOUNDS

COATING CATEGORY	CURRENT VOC LIMIT
FLAT COATINGS	50
NONFLAT COATINGS	100
NONFLAT HIGH GLOSS COATINGS	150
SPECIALTY COATINGS	
ALUMINUM ROOF COATINGS	400
BASEMENT SPECIALTY COATINGS	400
BITUMINOUS ROOF COATINGS	50
BITUMINOUS ROOF PRIMERS	350
BOND BREAKERS	350
CONCRETE CURING COMPOUNDS	350
CONCRETE/MASONRY SEALERS	100
DRIVEWAY SEALERS	50
DRY FOG COATINGS	150
FAUX FINISHING COATINGS	350
FIRE RESISTIVE COATINGS	350
FLOOR COATINGS	100
FORM-RELEASE COMPOUNDS	250
GRAPHIC ARTS COATINGS (SIGN PAINTS)	500
HIGH-TEMPERATURE COATINGS	420
INDUSTRIAL MAINTENANCE COATINGS	250
LOW SOLIDS COATINGS[1]	120
MAGNESITE CEMENT COATINGS	450
MASTIC TEXTURE COATINGS	100
METALLIC PIGMENTED COATINGS	500
MULTICOLOR COATINGS	250
PRETREATMENT WASH PRIMERS	420
PRIMERS, SEALERS, & UNDERCOATERS	100
REACTIVE PENETRATING SEALERS	350
RECYCLED COATINGS	250
ROOF COATINGS	50
RUST PREVENTATIVE COATINGS	250
SHELLACS:	
CLEAR	730
OPAQUE	550
SPECIALTY PRIMERS, SEALERS & UNDERCOATERS	100
STAINS	250
STONE CONSOLIDANTS	450
SWIMMING POOL COATINGS	340
TRAFFIC MARKING COATINGS	100
TUB & TILE REFINISH COATINGS	420
WATERPROOFING MEMBRANES	250
WOOD COATINGS	275
WOOD PRESERVATIVES	350
ZINC-RICH PRIMERS	340

1. GRAMS OF VOC PER LITER OF COATING, INCLUDING WATER & EXEMPT COMPOUNDS
2. THE SPECIFIED LIMITS REMAIN IN EFFECT UNLESS REVISED LIMITS ARE LISTED IN SUBSEQUENT COLUMNS IN THE TABLE.
3. VALUES IN THIS TABLE ARE DERIVED FROM THOSE SPECIFIED BY THE CALIFORNIA AIR RESOURCES BOARD, ARCHITECTURAL COATINGS SUGGESTED CONTROL MEASURE, FEB. 1, 2008. MORE INFORMATION IS AVAILABLE FROM THE AIR RESOURCES BOARD.

X

5.504.4.3.1 Aerosol Paints and coatings. Aerosol paints and coatings shall meet the PWMIR Limits for ROC in Section 94522(a)(3) and other requirements, including prohibitions on use of certain toxic compounds and ozone depleting substances, in Sections 94522(c)(2) and (d)(2) of *California Code of Regulations*, Title 17, commencing with Section 94520; and in areas under the jurisdiction of the Bay Area Air Quality Management District additionally comply with the percent VOC by weight of product limits of Regulation 8 Rule 49.

5.504.4.3.2 Verification. Verification of compliance with this section shall be provided at the request of the enforcing agency. Documentation may include, but is not limited to, the following:

1. Manufacturer's product specification
2. Field verification of on-site product containers

X

5.504.4.4 Carpet Systems. All carpet installed in the building interior shall meet at least one of the testing and product requirements:

1. Carpet and Rug Institute's Green Label Plus Program.
2. Compliant with the VOC-emission limits and testing requirements specified in the California Department of Public Health Standard Method for the Testing and Evaluation of Volatile Organic Chemical Emissions from Indoor Sources Using Environmental Chambers, Version 1.1, February 2010 (also known as CDPH Standard Method V1.1 or Specification 01350).
3. NSF/ANSI 140 at the Gold level or higher;
4. Scientific Certifications Systems Sustainable Choice; or
5. Compliant with the Collaborative for High Performance Schools California (2014 CA-CHPS) Criteria and listed in the CHPS High Performance Product Database.

5.504.4.4.1 Carpet cushion. All carpet cushion installed in the building interior shall meet the requirements of the Carpet and Rug Institute Green Label program.

5.504.4.4.2 Carpet adhesive. All carpet adhesive shall meet the requirements of Table 5.504.4.1.

X

5.504.4.5 Composite wood products. Hardwood plywood, particleboard and medium density fiberboard composite wood products used on the interior or exterior of the buildings shall meet the requirements for formaldehyde as specified in ARB's Air Toxics Control Measure for Composite Wood (17 CCR 93120 et seq.). Those materials not exempted under the ATCM must meet the specified emission limits, as shown in Table 5.504.4.5.

5.504.4.5.3 Documentation. Verification of compliance with this section shall be provided as requested by the enforcing agency. Documentation shall include at least one of the following:

1. Product certifications and specifications.
2. Chain of custody certifications.
3. Product labeled and invoiced as meeting the Composite Wood Products regulation (see CCR, Title 17, Section 93120, et seq.).
4. Exterior grade products marked as meeting the PS-1 or PS-2 standards of the Engineered Wood Association, the Australian AS/NZS 2269 or European 636 3S standards.
5. Other methods acceptable to the enforcing agency.

TABLE 5.504.4.5 - FORMALDEHYDE LIMITS 1

MAXIMUM FORMALDEHYDE EMISSIONS IN PARTS PER MILLION

PRODUCT	CURRENT LIMIT
HARDWOOD PLYWOOD VENEER CORE	0.05
HARDWOOD PLYWOOD COMPOSITE CORE	0.05
PARTICLE BOARD	0.09
MEDIUM DENSITY FIBERBOARD	0.11
THIN MEDIUM DENSITY FIBERBOARD 2	0.13

1. VALUES IN THIS TABLE ARE DERIVED FROM THOSE SPECIFIED BY THE CALIFORNIA AIR RESOURCES BOARD, AIR TOXICS CONTROL MEASURE FOR COMPOSITE WOOD AS TESTED IN ACCORDANCE WITH ASTM E 1333. FOR ADDITIONAL INFORMATION, SEE CALIFORNIA CODE OF REGULATIONS, TITLE 17, SECTIONS 93120 THROUGH 93120.12.
2. THIN MEDIUM DENSITY FIBERBOARD HAS A MAXIMUM THICKNESS OF 5/16 INCHES (8 MM).

X

5.504.4.6 Resilient flooring systems. For 80 percent of floor area receiving resilient flooring, installed resilient flooring shall meet at least one of the following:

1. Certified under the Resilient Floor Covering Institute (RFCI) FloorScore program;
2. Compliant with the VOC-emission limits and testing requirements specified in the California Department of Public Health's 2010 Standard Method for the Testing and Evaluation Chambers, Version 1.1, February 2010;
3. Compliant with the Collaborative for High Performance Schools California (CA-CHPS) Criteria Interpretation for EQ 7. and EQ 7.1 (formerly EQ 2.2) dated July 2012 and listed in the CHPS High Performance Product DataBase; or
4. Products certified under UL GREENGUARD Gold (formerly the Greenguard Children's & Schools Program).

5.504.4.6.1 Verification of compliance. Documentation shall be provided verifying that resilient flooring materials meet the pollutant emission limits.

MANDATORY

X

5.504.5.3 Filters. In mechanically ventilated buildings, provide regularly occupied areas of the building with air filtration media for outside and return air that provides at least a Minimum Efficiency Reporting Value (MERV) of 13. MERV 13 filters shall be installed prior to occupancy, and recommendations for maintenance with filters of the same value shall be included in the operation and maintenance manual.

Exceptions:
1. Existing mechanical equipment.

5.504.5.3.1 Labeling. Installed filters shall be clearly labeled by the manufacturer indicating the MERV rating.

X

5.504.7 ENVIRONMENTAL TOBACCO SMOKE (ETS) CONTROL. Where outdoor areas are provided for smoking, prohibit smoking within 25 feet of building entries, outdoor air intakes and operable windows and within the building as already prohibited by other laws or regulations; or as enforced by ordinances, regulations or policies of any city, county, city and county, California Community College, campus of the California State University, or campus of the University of California, whichever are more stringent. When ordinances, regulations or policies are not in place, post signage to inform building occupants of the prohibitions.

X

SECTION 5.505 INDOOR MOISTURE CONTROL

5.505.1 INDOOR MOISTURE CONTROL. Buildings shall meet or exceed the provisions of *California Building Code*, CCR, Title 24, Part 2, Sections 1202 (Ventilation) and Chapter 14 (Exterior Walls). For additional measures, see Section 5.407.2 of this code.

X

SECTION 5.506 INDOOR AIR QUALITY

5.506.1 OUTSIDE AIR DELIVERY. For mechanically or naturally ventilated spaces in buildings, meet the minimum requirements of Section 120.1 (Requirements For Ventilation) of the *California Energy Code*, or the applicable local code, whichever is more stringent, and Division 1, Chapter 4 of CCR, Title 8.

5.506.2 CARBON DIOXIDE (CO2) MONITORING. For buildings or additions equipped with demand control ventilation, CO2 sensors and ventilation controls shall be specified and installed in accordance with the requirements of the California Energy Code, Section 120(c)(4).

X

SECTION 5.507 ENVIRONMENTAL COMFORT

5.507.4 ACOUSTICAL CONTROL. Employ building assemblies and components with Sound Transmission Class (STC) values determined in accordance with ASTM E 90 and ASTM E 413, or Outdoor-Indoor Sound Transmission Class (OITC) determined in accordance with ASTM E 1332, using either the prescriptive or performance method in Section 5.507.4.1 or 5.507.4.2.

Exception: Buildings with few or no occupants or where occupants are not likely to be affected by exterior noise, as determined by the enforcement authority, such as factories, stadiums, storage, enclosed parking structures and utility buildings.

Exception: [DSA-SS] For public schools and community colleges, the requirements of this section and all subsections apply only to new construction.

5.507.4.1 Exterior noise transmission, prescriptive method. Wall and roof-ceiling assemblies exposed to the noise source making up the building or addition envelope or altered envelope shall meet a composite STC rating of at least 50 or a composite OITC rating of no less than 40, with exterior windows of a minimum STC of 40 or OITC of 30 in the following locations:

1. Within the 65 CNEL noise contour of an airport.

   Exceptions:
   a. L_{dn} or CNEL for military airports shall be determined by the facility Air Installation
   b. L_{dn} or CNEL for other airports and heliports for which a land use plan has not been developed shall be determined by the local general plan noise element.

2. Within the 65 CNEL or Ldn noise contour of a freeway or expressway, railroad, industrial source or fixed-guideway source as determined by the Noise Element of the General Plan.

5.507.4.1.1. Noise exposure where noise contours are not readily available. Buildings exposed to a noise level of 65 dB L/eq - 1-hr during any hour of operation shall have building, addition or alteration exterior wall and roof-ceiling assemblies exposed to the noise source meeting a composite STC rating of at least 45 (or OITC 35), with exterior windows of a minimum STC of 40 (or OITC 30).

5.507.4.2 Performance Method. For buildings located as defined in Section 5.507.4.1 or 5.507.4.1.1, wall and roof-ceiling assemblies exposed to the noise source making up the building or addition envelope or altered envelope shall be constructed to provide an interior noise environment attributable to exterior sources that does not exceed an hourly equivalent noise level (Leq-1Hr) of 50 dBA in occupied areas during any hour of operation.

5.507.4.2.1 Site Features. Exterior features such as sound walls or earth berms may be utilized as appropriate to the building, addition or alteration project to mitigate sound migration to the interior.

5.507.4.2.2 Documentation of Compliance. An acoustical analysis documenting complying interior sound levels shall be prepared by personnel approved by the architect or engineer of record.

5.507.4.3 Interior sound transmission. Wall and floor-ceiling assemblies separating tenant spaces and tenant spaces and public places shall have an STC of at least 40.

Note: Examples of assemblies and their various STC ratings may be found at the California Office of Noise Control: www.toolbase.org/PDF/CaseStudies/stc_icc_ratings.pdf.

X

SECTION 5.508 OUTDOOR AIR QUALITY

5.508.1 Ozone depletion and greenhouse gas reductions. Installations of HVAC, refrigeration and fire suppression equipment shall comply with Sections 5.508.1.1 and 5.508.1.2.

5.508.1.1 Chlorofluorocarbons (CFCs). Install HVAC, refrigeration and fire suppression equipment that do not contain CFCs.

5.508.1.2 Halons. Install HVAC, refrigeration and fire suppression equipment that do not contain Halons.

N/A

5.508.2 Supermarket refrigerant leak reduction. New commercial refrigeration systems shall comply with the provisions of this section when installed in retail food stores 8,000 square feet or more conditioned area, and that utilize either refrigerated display cases, or walk-in coolers or freezers connected to remote compressor units or condensing units. The leak reduction measures apply to refrigeration systems containing high-global-warming potential (high-GWP) refrigerants with a GWP of 150 or greater. New refrigeration systems include both new facilities and the replacement of existing refrigeration systems in existing facilities.

Exception: Refrigeration systems containing low-global warming potential (low-GWP) refrigerant with a GWP value less than 150 are not subject to this section. Low-GWP refrigerants are nonozone-depleting refrigerants that include ammonia, carbon dioxide (CO/2), and potentially other refrigerants.

5.508.2.1 Refrigerant piping. Piping compliant with the California Mechanical Code shall be installed to be accessible for leak protection and repairs. Piping runs using threaded pipe, copper tubing with an outside diameter (OD) less than 1/4 inch, flared tubing connections and short radius elbows shall not be used in refrigerant systems except as noted below.

5.508.2.1.1 Threaded pipe. Threaded connections are permitted at the compressor rack.

5.508.2.1.2 Copper pipe. Copper tubing with an OD less than 1/4 inch may be used in systems with a refrigerant charge of 5 pounds or less.

5.508.2.1.2.1 Anchorage. One-fouth-inch OD tubing shall be securely clamped to a rigid base to keep vibration levels below 8 mils.

5.508.2.1.3 Flared tubing connections. Double-flared tubing connections may be used for pressure controls, valve pilot lines and oil.

Exception: Single-flared tubing connections may be used with a multiring seal coated with industrial sealant suitable for use with refrigerants and tightened in accordance with manufacturer's recommendations.

5.508.2.1.4 Elbows. Short radius elbows are only permitted where space limitations prohibit use of long radius elbows.

5.508.2.2 Valves. Valves and fittings shall comply with the *California Mechanical Code* and as follows.

5.508.2.2.1 Pressure relief valves. For vessels containing high-GWP refrigerant, a rupture disc shall be installed between the outlet of the vessel and the inlet of the pressure relief valve.

5.508.2.2.1.1 Pressure detection. A pressure gauge, pressure transducer or other device shall be installed in the space between the rupture disc and the relief valve inlet to indicate a disc rupture or discharge of the relief valve.

5.508.2.2.2 Access valves. Only Schrader access valves with a brass or steel body are permitted for use.

5.508.2.2.2.1 Valve caps. For systems with a refrigerant charge of 5 pounds or more, valve caps shall be brass or steel and not plastic.

5.508.2.2.2.2 Seal caps. If designed for it, the cap shall have a neoprene O-ring in place.

5.508.2.2.2.2.1 Chain tethers. Chain tethers to fit ovr the stem are required for valves designed to have seal caps.

Exception: Valves with seal caps that are not removed from the valve during stem operation.

5.508.2.3 Refrigerated service cases. Refrigerated service cases holding food products containing vinegar and salt shall have evaporator coils of corrosion-reistant material, such as stainless steel; or be coated to prevent corrosion from these substances.

5.508.2.3.1 Coil coating. Consideration shall be given to the heat transfer efficiency of coil coating to maximize energy efficiency.

5.508.2.4 Refrigerant receivers. Refrigerant receivers with capacities greater than 200 pounds shall be fitted with a device tha indicates the level of refrigerant in the receiver.

5.508.2.5 Pressure testing. The system shall be pressure tested during installation prior to evacuation and charging.

5.508.2.5.1 Minimum pressure. The system shall be charged with regulated dry nitrogen and appropriate tracer gas to bring system pressure up to 300 psig minimum.

5.508.2.5.2 Leaks. Check the system for leaks, repair any leaks, and retest for pressure using the same gauge.

5.508.2.5.3 Allowable pressure change. The system shall stand, unaltered, for 24 hours with no more than a +/- one pound pressure change from 300 psig, measured with the same gauge.

5.508.2.6 Evacuation. The system shall be evacuated after pressure testing and prior to charging.

5.508.2.6.1 First vacuum. Pull a system vacuum down to at least 1000 microns (+/- 50 microns), and hold for 30 minutes.

5.508.2.6.2 Second vacuum. Pull a second system vacuum to a minimum of 500 microns and hold for 30 minutes.

5.508.2.6.3 Third vacuum. Pull a third vacuum down to a minimum of 300 microns, and hold for 24 hours with a maximum drift of 100 microns over a 24-hour period.

DISCLAIMER: THIS DOCUMENT IS PROVIDED AND INTENDED TO BE USED AS A MEANS TO INDICATE AREAS OF COMPLIANCE WITH THE 2016 CALIFORNIA GREEN BUILDING STANDARDS (CALGREEN) CODE. DUE TO THE VARIABLES BETWEEN BUILDING DEPARTMENT JURISDICTIONS, THIS CHECKLIST IS TO BE USED ON AN INDIVIDUAL PROJECT BASIS AND MAY BE MODIFIED BY THE END USER TO MEET THOSE INDIVIDUAL NEEDS. THE END USER ASSUMES ALL RESPONSIBILITY ASSOCIATED WITH THE USE OF THIS DOCUMENT, INCLUDING VERIFICATION WITH THE FULL CODE.

IDENTIFICATION STAMP
DIV. OF THE STATE ARCHITECT
APP: 02-118630 INC:
REVIEWED FOR
SS ☐ FLS ☐ ACS ☑
DATE: 04/13/2021

OFFICE OF THE STATE FIRE MARSHAL
APPROVED FIRE AND PANIC ONLY
Approval of this plan does not authorize or approve any omission or deviation from applicable regulations. Final approval is subject to field inspection. One set of approved plans shall be available on the project site at all times.
PERMIT NO.: 20-N-2332-CP
REVIEWED BY: LITO CATAYLO, OSFM
DATE: 3/1/2021

GENERAL SERVICES
Department of General Services
State of California
Real Estate Services Division
Project Management & Development Branch
707 Third Street, Suite 4-105
West Sacramento, California 95605

NICHOLS MELBURG & ROSSETTO
ARCHITECTS + ENGINEERS
300 Knollcrest Drive
Redding, CA. 96002
(530) 222-3300 (530) 222-3538 FAX
http://www.nmrdesign.com

Copyright © 2020
All ideas, designs, arrangements and plans indicated or represented by this drawing are owned by, and the property of, NICHOLS, MELBURG and ROSSETTO and were created, evolved and developed for use on, and in conjunction with, the specified project. None of such ideas, designs, arrangements or plans shall be used by, or disclosed to any person, firm or corporation for any purpose whatsoever without the written permission of NICHOLS, MELBURG and ROSSETTO.

LICENSE STAMPS

LICENSED ARCHITECT
KYLE MATTI
C 27504
REN. 10/31/21
STATE OF CALIFORNIA

CONSULTANT

DRAWING STATUS
CONSTRUCTION DOCUMENTS

ISSUE

No.	Date	Description
1	10/20/2020	INITIAL PLAN REVIEW
2	01/22/2021	AGENCY RESUBMITTAL
3	03/22/2021	AGENCY RESUBMITTAL

If drawing is not 30" x 42" it is a reduced print

PROJECT
RESIDENTIAL CENTER, UKIAH: REPLACEMENT OF EXISTING RESIDENTIAL CENTER
440 EAST HILL ROAD
WILLITS, CALIFORNIA 95490
MENDOCINO COUNTY
CALIFORNIA CONSERVATION CORP

Supervisor	Designed	Drawn
KJM	DMH	NMR

DSA Application No.
02-118630

SHEET TITLE
CALGREEN CHECKLIST

DGS Project Number 000000000001826
NMR Project Number 18-6456

Reference North

Sheet Scale 12" = 1'-0"

Sheet Number G012

ISSUE DATE
July 9, 2021

Plot Date: 3/18/2021 3:24:59 PM
File Name: BIM 360://CCC Willits Residential Center/A_CCC-WRC-COMMON.rvt

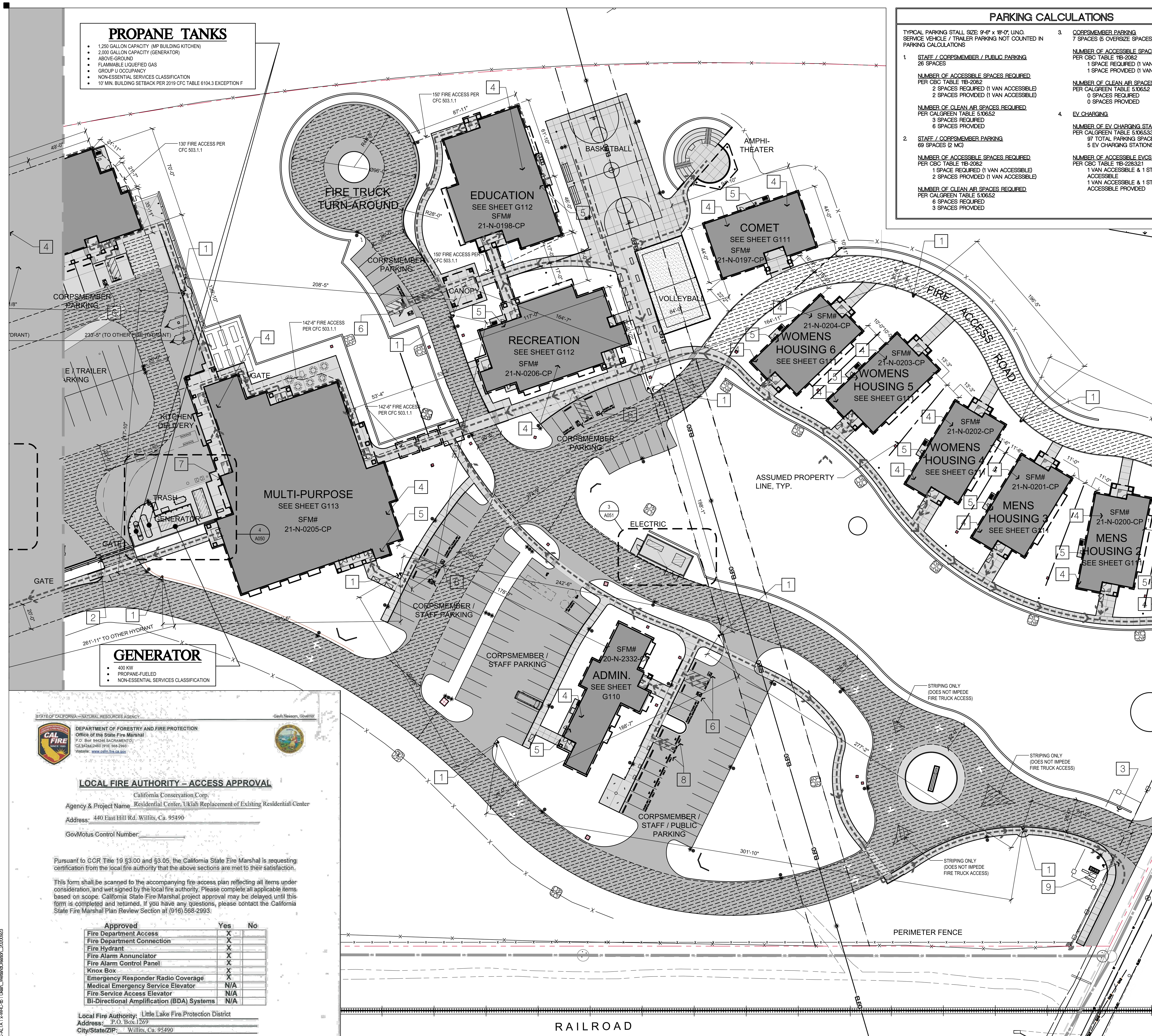

PROPANE TANKS

- 1,250 GALLON CAPACITY (MP BUILDING KITCHEN)
- 2,000 GALLON CAPACITY (GENERATOR)
- ABOVE-GROUND
- FLAMMABLE LIQUEFIED GAS
- GROUP U OCCUPANCY
- NON-ESSENTIAL SERVICES CLASSIFICATION
- 10' MIN. BUILDING SETBACK PER 2019 CFC TABLE 6104.3 EXCEPTION F

GENERATOR

- 400 KW
- PROPANE-FUELED
- NON-ESSENTIAL SERVICES CLASSIFICATION

STATE OF CALIFORNIA —NATURAL RESOURCES AGENCY — Gavin Newsom, Governor

DEPARTMENT OF FORESTRY AND FIRE PROTECTION
Office of the State Fire Marshal
P.O. Box 944246 SACRAMENTO
CA 94244-2460 (916) 568-2993
Website: www.osfm.fire.ca.gov

LOCAL FIRE AUTHORITY – ACCESS APPROVAL

Agency & Project Name: California Conservation Corp. Residential Center, Ukiah Replacement of Existing Residential Center

Address: 440 East Hill Rd. Willits, Ca. 95490

GovMotus Control Number: ______

Pursuant to CCR Title 19 §3.00 and §3.05, the California State Fire Marshal is requesting certification from the local fire authority that the above sections are met to their satisfaction.

This form shall be scanned to the accompanying fire access plan reflecting all items under consideration, and wet signed by the local fire authority. Please complete all applicable items based on scope. California State Fire Marshal project approval may be delayed until this form is completed and returned. If you have any questions, please contact the California State Fire Marshal Plan Review Section at (916) 568-2993.

Approved	Yes	No
Fire Department Access	X	
Fire Department Connection	X	
Fire Hydrant	X	
Fire Alarm Annunciator	X	
Fire Alarm Control Panel	X	
Knox Box	X	
Emergency Responder Radio Coverage	X	
Medical Emergency Service Elevator	N/A	
Fire Service Access Elevator	N/A	
Bi-Directional Amplification (BDA) Systems	N/A	

Local Fire Authority: Little Lake Fire Protection District
Address: P.O. Box 1269
City/State/ZIP: Willits, Ca. 95490

Approval issued by: Chris Wilkes
Rank/Title: Fire Chief
Phone Number: (707) 459-6271
Signature: [signature] Date: 10/9/2020

"The Department of Forestry and Fire Protection serves and safeguards the people and protects the property and resources of California."

Login Name: Amy P
Plot Date: March 18, 2021 - 3:31 pm
File Name: N:\Projects\6000.Civic\2018\18-6456 CCC Willits Residential Center\Drawings\WRC-site_code.dwg
XREFS: x-WRC-site ; x-WRC-TOPO ; x-WRC-ALTA ; x-WRC-tb ; Ukiah_WetlandCreation_20200923

PARKING CALCULATIONS

TYPICAL PARKING STALL SIZE: 9'-6" x 18'-0", U.N.O.
SERVICE VEHICLE / TRAILER PARKING NOT COUNTED IN PARKING CALCULATIONS

1. STAFF / CORPSMEMBER / PUBLIC PARKING
   26 SPACES

   NUMBER OF ACCESSIBLE SPACES REQUIRED
   PER CBC TABLE 11B-208.2
   2 SPACES REQUIRED (1 VAN ACCESSIBLE)
   2 SPACES PROVIDED (1 VAN ACCESSIBLE)

   NUMBER OF CLEAN AIR SPACES REQUIRED
   PER CALGREEN TABLE 5.106.5.2
   3 SPACES REQUIRED
   6 SPACES PROVIDED

2. STAFF / CORPSMEMBER PARKING
   69 SPACES (2 MC)

   NUMBER OF ACCESSIBLE SPACES REQUIRED
   PER CBC TABLE 11B-208.2
   1 SPACE REQUIRED (1 VAN ACCESSIBLE)
   2 SPACES PROVIDED (1 VAN ACCESSIBLE)

   NUMBER OF CLEAN AIR SPACES REQUIRED
   PER CALGREEN TABLE 5.106.5.2
   6 SPACES REQUIRED
   3 SPACES PROVIDED

3. CORPSMEMBER PARKING
   7 SPACES (5 OVERSIZE SPACES)

   NUMBER OF ACCESSIBLE SPACES REQUIRED
   PER CBC TABLE 11B-208.2
   1 SPACE REQUIRED (1 VAN ACCESSIBLE)
   1 SPACE PROVIDED (1 VAN ACCESSIBLE)

   NUMBER OF CLEAN AIR SPACES REQUIRED
   PER CALGREEN TABLE 5.106.5.2
   0 SPACES REQUIRED
   0 SPACES PROVIDED

4. EV CHARGING

   NUMBER OF EV CHARGING STATIONS REQUIRED
   PER CALGREEN TABLE 5.106.5.3.3
   97 TOTAL PARKING SPACES
   5 EV CHARGING STATIONS REQUIRED

   NUMBER OF ACCESSIBLE EVCS REQUIRED
   PER CBC TABLE 11B-228.3.2.1
   1 VAN ACCESSIBLE & 1 STANDARD ACCESSIBLE
   1 VAN ACCESSIBLE & 1 STANDARD ACCESSIBLE PROVIDED

GENERAL NOTES

1. ALL EXTERIOR DOORS ARE AT GRADE OR ACCESSIBLE BY RAMPS - ACCESSIBLE FROM PATH OF TRAVEL SHOWN.
2. FOR CONSTRUCTION DETAILS/REFERENCES RELATED TO NOTES ON THIS SHEET, SEE ENLARGED ARCHITECTURAL SITE PLANS
3. FOR ACCESSIBLE RESTROOMS AND DRINKING FOUNTAINS IN BUILDINGS, SEE FLOOR PLANS.
4. ACCESSIBLE PATH PROVIDED BETWEEN BUILDINGS ON SITE
5. ACCESSIBLE PATH OF TRAVEL NOT REQUIRED TO FUEL TANK, VEHICLE WASH, HAZMAT STORAGE, PV ARRAY OR OTHER AREAS THAT ARE USED BY ONLY STAFF / MAINTENANCE PERSONNEL.

SHEET NOTES

1. NEW HYDRANT - PROVIDE 3 FT. MIN. CLEAR AREA AROUND HYDRANT TO BE PERMANENTLY MAINTAINED
2. FIRE DEPARTMENT KNOX KEY BOX AT GATE POST
3. ACCESSIBLE PARKING TOW AWAY SIGN, SEE DETAIL 6/G210
4. ACCESSIBLE RESTROOM, SEE FLOOR PLANS
5. FIRE SPRINKLER RISER
6. ACCESSIBLE PARKING, SEE ENLARGED ARCHITECTURAL SITE PLANS AND DETAIL 1/G210
7. FIRE EXTINGUISHER, PROVIDE OUTDOOR CABINET MOUNTED TO UNISTRUT FRAME AND ANCHORED TO CONCRETE. CATO CHIEF CABINET, OR EQUAL.
8. ACCESSIBLE EV CHARGING STALLS, SEE DETAIL 2/G210
9. EXISTING HYDRANT TO BE REMOVED, SEE CIVIL DRAWINGS

SITE PLAN LEGEND

NEW A/C PAVING

NEW CONCRETE PAVING

20 FT. MIN. WIDTH FIRE ACCESS ROAD - WITH 30'-0" MIN. INSIDE TURNING RADIUS AND 50'-0" MIN. OUTSIDE TURNING RADIUS. MAINTAIN 13'-6" MIN. CLEAR HEIGHT THROUGHOUT ENTIRE PATH OF TRAVEL DEFINED.

CONTINUOUSLY ACCESSIBLE PATH OF TRAVEL COMPLYING WITH CBC 11B-303 & 11B-403 WITH THE FOLLOWING PROPERTIES:
1. NO ABRUPT CHANGES IN LEVEL EXCEEDING 1/2" WITHOUT A RAMP. CHANGES IN LEVEL BETWEEN 1/4" AND 1/2" SHALL BE BEVELED WITH A SLOPE NOT STEEPER THAN 1 : 2.
2. MINIMUM WIDTH OF 48" U.N.O. AS LARGER
3. MAXIMUM RUNNING SLOPE OF 1:20 (5%) UNLESS PROVIDED WITH A RAMP COMPLYING W/ CBC 11B-405
4. MAXIMUM CROSS SLOPE OF 1:48 (2%)
5. PATH SURFACE IS SLIP-RESISTANT, STABLE, FIRM, AND SMOOTH (CBC 11B-302)
6. FREE OF OVERHANGING OBSTRUCTIONS TO 80" MINIMUM AND PROTRUDING OBJECTS GREATER THAN 4" PROJECTION FROM WALL AND ABOVE 27" AND LESS THAN 80" (CBC 11B-307)

KEY PLAN

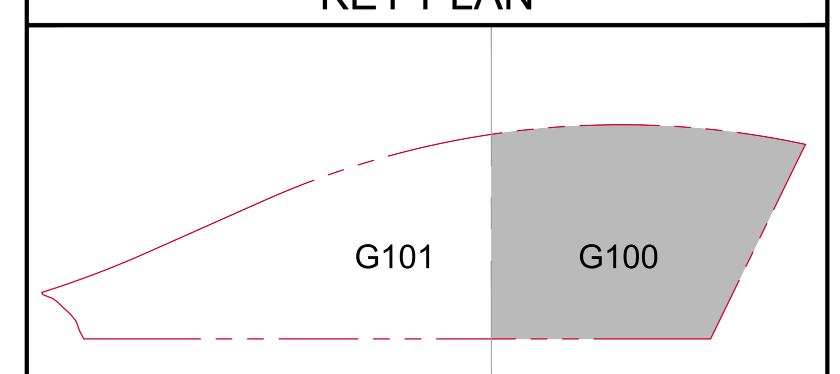

SITE CODE ANALYSIS & ACCESSIBILITY PLAN - SOUTH

SCALE: 1" = 30'-0"

REFERENCE NORTH TRUE NORTH

0' 15' 30' 60' 120'

IDENTIFICATION STAMP
DIV. OF THE STATE ARCHITECT
APP: 02-118630 INC:
REVIEWED FOR
SS ☐ FLS ☐ ACS ☑
DATE: 04/13/2021

OFFICE OF THE STATE FIRE MARSHAL
APPROVED FIRE AND PANIC ONLY
Approval of this plan does not authorize or approve any omission or deviation from applicable regulations. Final approval is subject to field inspection. One set of approved plans shall be available on the project site at all times.
PERMIT NO.: 20-N-2332-CP
REVIEWED BY: LITO CATAYLO, OSFM
DATE: 4/1/2021

DGS GENERAL SERVICES
Department of General Services
State of California
Real Estate Services Division
Project Management & Development Branch
707 Third Street, Suite 4-105
West Sacramento, California 95605

NM&R
NICHOLS MELBURG & ROSSETTO ARCHITECTS + ENGINEERS
300 Knollcrest Drive
Redding, CA. 96002
(530) 222-3300 (530) 222-3538 FAX
http://www.nmrdesign.com

Copyright © 2021
All ideas, designs, arrangements and plans indicated or represented by this drawing are owned by, and the property of NICHOLS, MELBURG and ROSSETTO and were created, evolved and developed for use on, and in conjunction with, the specified project. None of such ideas, designs, arrangements or plans shall be used by, or disclosed to any person, firm or corporation for any purpose whatsoever without the written permission of NICHOLS, MELBURG and ROSSETTO.

LICENSE STAMPS

LICENSED ARCHITECT C-27504 REN. 10/31/21 STATE OF CALIFORNIA

CONSULTANT

DRAWING STATUS
CONSTRUCTION DOCUMENTS

ISSUE

No.	Date	Description
1	10/22/2020	INITIAL PLAN REVIEW
2	01/08/2021	AGENCY RESUBMITTAL
3	03/22/2021	AGENCY RESUBMITTAL

If drawing is not 30" x 42" it is a reduced print

PROJECT
RESIDENTIAL CENTER, UKIAH: REPLACEMENT OF EXISTING RESIDENTIAL CENTER
440 EAST HILL ROAD
WILLITS, CALIFORNIA, 95490
MENDOCINO COUNTY
CALIFORNIA CONSERVATION CORPS

Supervisor	Designed	Drawn
KJM	DMH	DMH

DSA Application No.
02-118630

SHEET TITLE
SITE CODE ANALYSIS & ACCESSIBILITY PLAN - SOUTH

DGS Project Number 0000000000001826
NMR Project Number 18-6456

Reference North
Sheet Scale 1" = 30'-0"
Sheet Number G100

ISSUE DATE
July 9, 2021

SHEET NOTES

1. NEW HYDRANT - PROVIDE 3 FT. MIN. CLEAR AREA AROUND HYDRANT TO BE PERMANENTLY MAINTAINED
2. FIRE DEPARTMENT KNOX KEY BOX AT GATE POST
3. ACCESSIBLE PARKING TOW AWAY SIGN, SEE DETAIL 6/G210
4. ACCESSIBLE RESTROOM, SEE FLOOR PLANS
5. FIRE SPRINKLER RISER
6. ACCESSIBLE PARKING, SEE ENLARGED ARCHITECTURAL SITE PLANS AND DETAIL 1/G210
7. FIRE EXTINGUISHER, PROVIDE OUTDOOR CABINET MOUNTED TO UNISTRUT FRAME AND ANCHORED TO CONCRETE. CATO CHIEF CABINET, OR EQUAL
8. ACCESSIBLE EV CHARGING STALLS, SEE DETAIL 2/G210

GENERAL NOTES

1. ALL EXTERIOR DOORS ARE AT GRADE OR ACCESSIBLE BY RAMPS - ACCESSIBLE FROM PATH OF TRAVEL SHOWN.
2. FOR CONSTRUCTION DETAILS/REFERENCES RELATED TO NOTES ON THIS SHEET, SEE ENLARGED ARCHITECTURAL SITE PLANS
3. FOR ACCESSIBLE RESTROOMS AND DRINKING FOUNTAINS IN BUILDINGS, SEE FLOOR PLANS.
4. ACCESSIBLE PATH PROVIDED BETWEEN BUILDINGS ON SITE
5. ACCESSIBLE PATH OF TRAVEL NOT REQUIRED TO FUEL TANK, VEHICLE WASH, HAZMAT STORAGE, PV ARRAY OR OTHER AREAS THAT ARE USED BY ONLY STAFF / MAINTENANCE PERSONNEL.

HAZMAT STOR.

- HIGH-HAZARD GROUP H-2
- PRE-ENGINEERED & PRE-FABRICATED METAL SKID-MOUNTED CONTAINER
- CONSTRUCTION: TYPE V-B
- ONE STORY, 240 S.F. GROSS, 3,000 ALLOWED
- THREE COMPARTMENTS - FLAMMABLE GAS / CLASS 1B FLAMMABLE LIQUID / CLASS IIIB COMBUSTIBLE LIQUIDS
- NON-FIRE RATED (NEAREST STRUCTURE IS +60' AWAY)
- INTEGRAL SECONDARY CONTAINMENT, EYE WASH, POWER/LIGHTING AND DRY CHEMICAL FIRE SUPPRESSION SYSTEM
- STORAGE OF PORTABLE GASOLINE TANKS, PORTABLE PROPANE TANKS AND MISC. FLUIDS IN SEPARATE COMPARTMENTS
  - MISC. FLUIDS INCLUDE: SMALL CONTAINERS OF MOTOR OIL, 2-CYCLE ENGINE OIL, ANTIFREEZE, AUTOMATIC TRANSMISSION FLUID, BAR & CHAIN OIL, CAMP FUEL, POWER STEERING FLUID AND BRAKE FLUID
- PROVIDE NFPA 704 PLACARDS (SIGN TYPE O - SEE SHEET A965):
  - FLAMMABLE LIQUID: BLUE - 1, RED - 3, YELLOW-0, WHITE-BLANK
  - FLAMMABLE GAS: BLUE - 2, RED - 4, YELLOW-0, WHITE-BLANK
- PROVIDE FIRE EXTINGUISHER MOUNTED ADJACENT TO UNIT & SIGN TYPE N ABOVE EXTINGUISHER (SEE SHEET A965)
- SEE SPECIFICATION 13 34 25 FOR MORE INFO

DUAL FUEL TANK

- 2,000 GALLON TOTAL CAPACITY
- ABOVE-GROUND
- INTEGRAL SECONDARY CONTAINMENT
- 1,000 GALLONS CLASS II (2) COMBUSTIBLE LIQUID - DIESEL
- 1,000 GALLONS CLASS IB (1B) FLAMMABLE LIQUID - GASOLINE
- PROVIDE NFPA 704 PLACARD ON TANK (SIGN TYPE O - SEE SHEET A965): AT GASOLINE: BLUE - 1, RED - 3, YELLOW - 0, WHITE - BLANK; AT DIESEL: BLUE - 1, RED - 2, YELLOW - 0, WHITE - BLANK
- PROVIDE FIRE EXTINGUISHER MOUNTED NEAR TANK AT VEHICLE WASH ENCLOSURE WALL & SIGN TYPE N ABOVE EXTINGUISHER (SEE SHEET A965)
- NON-ESSENTIAL SERVICES CLASSIFICATION
- PACKAGED SYSTEM W/ FUEL DISPENSER MOUNTED TO TANK BY FACTORY
- SEE SPECIFICATION 33 56 13 FOR MORE INFO
- SEE DETAIL 1/P501 FOR TANK MOUNTING & E020 FOR REQUIREMENTS OF HAZARDOUS LOCATION BOUNDARIES PER CEC 514

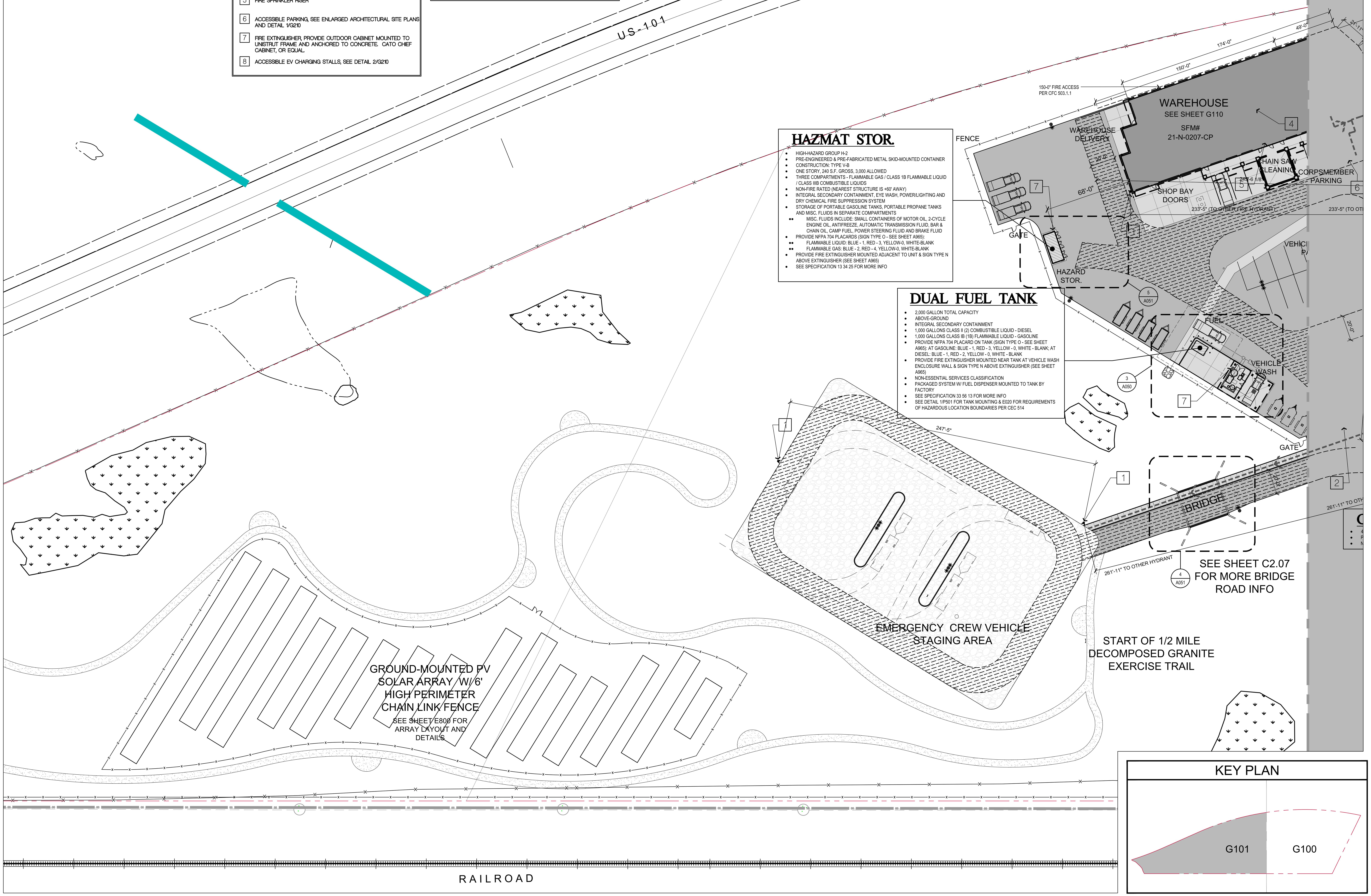

SITE CODE ANALYSIS & ACCESSIBILITY PLAN - NORTH

SCALE: 1" = 30'-0"

REFERENCE NORTH · TRUE NORTH

0' 15' 30' 60' 120'

IDENTIFICATION STAMP
DIV. OF THE STATE ARCHITECT
APP: 02-118630 INC:
REVIEWED FOR
SS ☐ FLS ☐ ACS ☑
DATE: 04/13/2021

OFFICE OF THE STATE FIRE MARSHAL
APPROVED FIRE AND PANIC ONLY
Approval of this plan does not authorize or approve any omission or deviation from applicable regulations. Final approval is subject to field inspection. One set of approved plans shall be available on the project site at all times.
PERMIT NO.: 20-N-2332-CP
REVIEWED BY: LITO CATAYLO, OSFM
DATE: 3/1/2021

GENERAL SERVICES
Department of General Services
State of California
Real Estate Services Division
Project Management & Development Branch
707 Third Street, Suite 4-105
West Sacramento, California 95605

NICHOLS MELBURG & ROSSETTO
ARCHITECTS + ENGINEERS
300 Knollcrest Drive
Redding, CA. 96002
(530) 222-3300 (530) 222-3538 FAX
http://www.nmrdesign.com

Copyright © 2021
All ideas, designs, arrangements and plans indicated or represented by this drawing are owned by, and the property of, NICHOLS, MELBURG and ROSSETTO and were created, evolved and developed for use on, and in conjunction with, the specified project. None of such ideas, designs, arrangements or plans shall be used by, or disclosed to any person, firm or corporation for any purpose whatsoever without the written permission of NICHOLS, MELBURG and ROSSETTO.

LICENSE STAMPS
C 27504

CONSULTANT

DRAWING STATUS
CONSTRUCTION DOCUMENTS

ISSUE

No.	Date	Description
1	10/22/2020	INITIAL PLAN REVIEW
2	01/08/2021	AGENCY RESUBMITTAL
3	03/22/2021	AGENCY RESUBMITTAL

If drawing is not 30" x 42" it is a reduced print

PROJECT
RESIDENTIAL CENTER, UKIAH: REPLACEMENT OF EXISTING RESIDENTIAL CENTER
440 EAST HILL ROAD
WILLITS, CALIFORNIA, 95490
MENDOCINO COUNTY
CALIFORNIA CONSERVATION CORPS

Supervisor	Designed	Drawn
KJM	DMH	DMH

DSA Application No.
02-118630

SHEET TITLE
SITE CODE ANALYSIS & ACCESSIBILITY PLAN - NORTH

DGS Project Number	NMR Project Number
000000000001826	18-6456

Reference North · Sheet Scale 1" = 30'-0"
Sheet Number
G101

ISSUE DATE
July 9, 2021

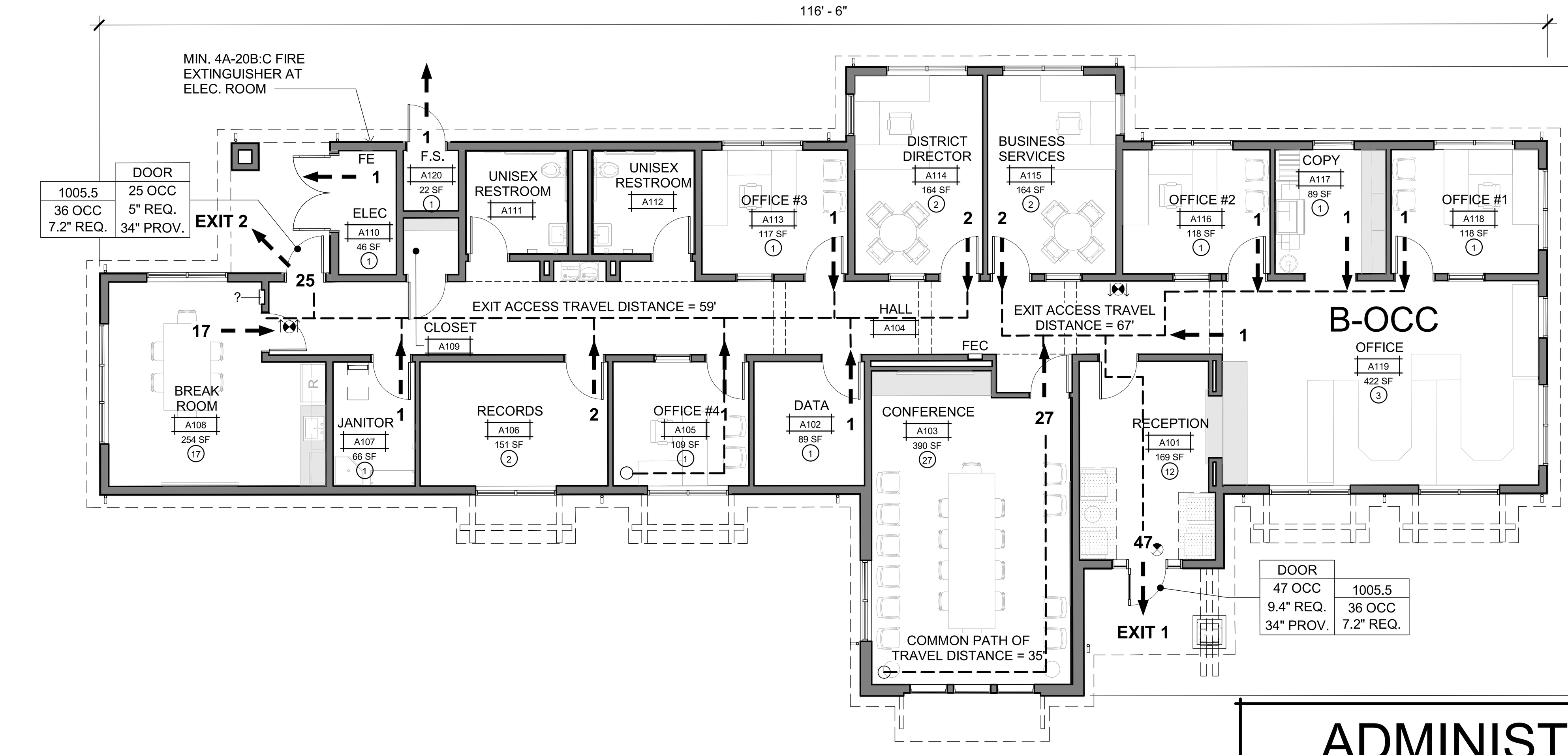

1

ADMINISTRATION BLDG LIFE SAFETY PLAN

SCALE: 1/8" = 1'-0"

ADMINISTRATION BLDG OCCUPANCY CALCULATIONS

NO.	NAME	AREA	LOAD FACTOR	OCCUPANT LOAD
A101	RECEPTION	169 SF	15 SF	12
A102	DATA	89 SF	300 SF	1
A103	CONFERENCE	390 SF	15 SF	27
A104	HALL	497 SF	0 SF	---
A105	OFFICE #4	109 SF	150 SF	1
A106	RECORDS	151 SF	150 SF	2
A107	JANITOR	66 SF	300 SF	1
A108	BREAK ROOM	254 SF	15 SF	17
A109	CLOSET	20 SF	0 SF	---
A110	ELEC	46 SF	300 SF	1
A111	UNISEX RESTROOM	66 SF	0 SF	---
A112	UNISEX RESTROOM	67 SF	0 SF	---
A113	OFFICE #3	117 SF	150 SF	1
A114	DISTRICT DIRECTOR	164 SF	150 SF	2
A115	BUSINESS SERVICES	164 SF	150 SF	2
A116	OFFICE #2	118 SF	150 SF	1
A117	COPY	89 SF	150 SF	1
A118	OFFICE #1	118 SF	150 SF	1
A119	OPEN OFFICE	422 SF	150 SF	3
A120	F.S.	22 SF	300 SF	1
				74

BUILDING EXITING REVIEW

EXIT WIDTH CALCULATIONS:

EXIT 1: 47 OCC. X 0.2" = 9.4" REQUIRED
1 DOOR @ 34" = 34" PROVIDED SO OK

EXIT 2: 25 OCC. X 0.2" = 5.0" REQUIRED
1 DOOR @ 34" = 34" PROVIDED SO OK

CONFERENCE ROOM OCCUPANT LOAD IS LESS THAN 49 OCCUPANTS, THEREFORE ONLY 1 EXIT IS REQUIRED FROM ROOM (CBC TABLE 1006.2.1)

ADMINISTRATION BUILDING CODE ANALYSIS

OCCUPANCY CLASSIFICATION:
- B (OFFICES, CONFERENCE ROOM WITH LESS THAN 50 OCCUPANTS)

CONSTRUCTION TYPE:
- V-B (FULLY SPRINKLERED)

NUMBER OF STORIES:
- ONE STORY

ACTUAL BUILDING HEIGHT
- 25'-3" (TOP OF CUPOLA)

BUILDING GROSS AREA: (INCLUDING OVERHANGS) 4,237 SQ. FT.

CONDITIONED/OCCUPIED BUILDING AREA: 3,529 SQ. FT.

SEPARATED OR NON-SEPARATED USE:
- NON-SEPARATED

ALLOWABLE BUILDING AREA (PER CBC TABLE 506.2): 36,000 SQ. FT. (B OCCUPANCY)

ALLOWABLE BUILDING HEIGHT LIMITS (PER CBC TABLE 504.3 & 504.4): 3 STORIES / 60 FEET (B OCCUPANCY)

4,237 SQ. FT. ACTUAL < 36,000 SQ. FT. ALLOWABLE AREA THEREFORE NO AREA MODIFICATIONS ARE NEEDED.

ASSISTIVE LISTENING SYSTEM REQUIREMENTS
(CBC 11B-216.10 & 11B-219)

- REQUIRED FOR CONFERENCE ROOMS & MEETING ROOMS
- MINIMUM NUMBER OF RECEIVERS - EQUAL TO 4% OF TOTAL NUMBER OF SEATS OR MINIMUM OF 2 (CBC 11B-219.3). THEREFORE, REQUIRED NUMBER OF RECEIVERS = .04 x 20 SEATS = .8 RECEIVERS. PROVIDE A MINIMUM OF 2.
- MINIMUM OF 2 RECEIVERS SHALL BE HEARING AID COMPATIBLE
- PORTABLE SYSTEMS ALLOWED PER CBC 11B-219.5 (NO FIXED SEATING)
- RECEIVERS TO BE OWNER-FURNISHED

AUTOMATIC FIRE SPRINKLER SYSTEM:
- YES, FULL
- WET PIPE SYSTEM PROVIDED FOR BUILDING

SMOKE DETECTION AND FIRE ALARM SYSTEMS:
- YES
- MANUAL PULL STATIONS, HORN/STROBE DEVICES, SPRINKLER WATER FLOW MONITORING

OTHER FIRE PROTECTION SYSTEM:
- NO

SMOKE CONTROL SYSTEM:
- NO

OCCUPANT LOAD FOR ENTIRE BUILDING:
- 74

HIGH FIRE HAZARD SEVERITY ZONE:
- NO

SEISMIC JOINTS:
- NO

EMERGENCY RESPONDER RADIO COVERAGE:
- YES

FIRE RESISTIVE REQUIREMENTS
- FOR TYPE V-B CONSTRUCTION - NONE REQUIRED (CBC TABLE 601)
- FOR EXTERIOR WALLS BASED ON FIRE SEPARATION DISTANCE - NONE REQUIRED BASED ON F.S.D. OF OVER 30' AND V-B CONSTRUCTION AND GROUP B OCCUPANCY

BUILDING EXITING REVIEW

EXIT WIDTH CALCULATIONS:

EXIT 1: 11 OCC. X 0.2" = 2.2" REQUIRED
1 DOOR @ 34" = 34" PROVIDED SO OK

EXIT 2: 2 OCC. X 0.2" = 0.4" REQUIRED
1 DOOR @ 34" = 34" PROVIDED SO OK

EXIT 3: 22 OCC. X 0.2" = 4.4" REQUIRED
1 DOOR @ 34" = 34" PROVIDED SO OK

EXIT 4: 13 OCC. X 0.2" = 2.6" REQUIRED
1 DOOR @ 34" = 34" PROVIDED SO OK

WAREHOUSE BLDG OCCUPANCY CALCULATIONS

NO.	NAME	AREA	LOAD FACTOR	OCCUPANT LOAD
W101	HALL	279 SF	0 SF	
W102	CREW STORAGE 1	286 SF	300 SF	1
W103	CREW STORAGE 2	286 SF	300 SF	1
W104	CREW STORAGE 3	286 SF	300 SF	1
W105	SECURE STORAGE	173 SF	300 SF	1
W106	AIR COMP	80 SF	300 SF	1
W107	ELEC./DATA	94 SF	300 SF	1
W108	SHOP MANAGER	129 SF	150 SF	1
W109	CREW STORAGE 4	286 SF	300 SF	1
W110	CREW STORAGE 5	286 SF	300 SF	1
W111	CREW STORAGE 6	286 SF	300 SF	1
W112	STORAGE	1929 SF	300 SF	7
W113	RESTORATION STORAGE	563 SF	300 SF	2
W114	GARAGE STORAGE	222 SF	300 SF	1
W115	WAREHOUSE DELIVERY	459 SF	500 SF	1
W116	WAREHOUSE	4097 SF	500 SF	9
W117	SHOP/STAGING	1332 SF	150 SF	9
W118	JANITOR	69 SF	300 SF	1
W119	SHOWER/RESTROOM	100 SF	0 SF	
W120	RESTROOM	59 SF	0 SF	
W121	ISSUE CENTER	277 SF	300 SF	1
W122	LAUNDRY	399 SF	150 SF	3
W123	SERVICE ROOM	73 SF	300 SF	1
W124	CREW CONSERVATIONISTS	756 SF	150 SF	6
W126	F.S. RISER	41 SF	300 SF	1
W127	W.H.	30 SF	300 SF	1
				53

WAREHOUSE BUILDING CODE ANALYSIS

OCCUPANCY CLASSIFICATION:
- B (OFFICES, LAUNDRY)
- F-1 (SHOP)
- S-1 (WAREHOUSE, CREW STORAGE)

CONSTRUCTION TYPE:
- V-B (FULLY SPRINKLERED)

NUMBER OF STORIES:
- ONE STORY

ACTUAL BUILDING HEIGHT
- 42'-6" (TOP OF CUPOLA)

BUILDING GROSS AREA: (INCLUDING OVERHANGS) 16,036 SQ. FT.

CONDITIONED/OCCUPIED BUILDING AREA: 13,703 SQ. FT.

SEPARATED OR NON-SEPARATED USE:
- NON-SEPARATED
- NO SEPARATION REQUIRED PER CBC TABLE 508.4

ALLOWABLE BUILDING AREA (PER CBC TABLE 506.2): 34,000 SQ. FT. (F-1 OCCUPANCY)

ALLOWABLE BUILDING HEIGHT LIMITS (PER CBC TABLE 504.3 & 504.4): 2 STORIES / 60 FEET (F-1 & S-1 OCCUPANCIES)

16,036 SQ. FT. ACTUAL < 34,000 SQ. FT. ALLOWABLE AREA THEREFORE NO AREA MODIFICATIONS ARE NEEDED.

AUTOMATIC FIRE SPRINKLER SYSTEM:
- YES, FULL
- WET PIPE SYSTEM PROVIDED FOR BUILDING

SMOKE DETECTION AND FIRE ALARM SYSTEMS:
- YES
- MANUAL PULL STATIONS, HORN/STROBE DEVICES, SPRINKLER WATER FLOW MONITORING

OTHER FIRE PROTECTION SYSTEM:
- NO

SMOKE CONTROL SYSTEM:
- NO

OCCUPANT LOAD FOR ENTIRE BUILDING:
- 53

HIGH FIRE HAZARD SEVERITY ZONE:
- NO

SEISMIC JOINTS:
- NO

EMERGENCY RESPONDER RADIO COVERAGE:
- YES

FIRE RESISTIVE REQUIREMENTS
- FOR TYPE V-B CONSTRUCTION - NONE REQUIRED (CBC TABLE 601)
- FOR EXTERIOR WALLS BASED ON FIRE SEPARATION DISTANCE - NONE REQUIRED BASED ON F.S.D. OF 20' AND V-B CONSTRUCTION AND GROUP F-1 OCCUPANCY

WAREHOUSE STORAGE RACKING
- STORAGE RACKING IS 12'-0" MAX. AND THUS IS NOT CONSIDERED HIGH-PILED STORAGE PER CFC DEFINITION.

WAREHOUSE STORAGE MATERIALS
- W102, W103, W104, W109, W110, W111 - CREW STORAGE: VARIOUS HAND AND POWER TOOLS FOR GRADE WORK
- W105 - SECURE STORAGE: MAINTENANCE MECHANIC HAND AND POWER TOOLS FOR GROUNDS AND FACILITY
- W112 - STORAGE: OPEN AND CLEAR
- W113 - RESTORATION STORAGE: POWER TOOLS, HAND TOOLS, CLIMBING GEAR, EXTENSION CORDS, WOOD BITS, ELECTRIC DRILLS
- W114 - GARAGE STORAGE: VARIOUS FLEET MAINTENANCE SUPPLIES SUCH AS AIR FILTERS, RADIATOR FLUID, BATTERY FLUID, WIPER BLADES, MOTOR OIL, BRAKE FLUID, POWER STEERING FLUID, TIRES, ETC.
- W116 - WAREHOUSE: UNIFORMS, BOOTS, SOFT CAPS, HARD HATS, GOGGLES, GLOVES, RAIN GEAR, TENTS, SLEEPING BAGS, COTS, CANTEENS, COOLERS, ETC.
- W117 - SHOP/STAGING: AVT'S, FORKLIFT, PALLET JACK, TRACTOR, ETC.
- W121 - ISSUE CENTER: UNIFORMS, BOOTS, GLOVES, BEDDING, PILLOWS, SLEEPING BAGS, SOFT CAPS, HARD HATS, ETC.
- W122 - LAUNDRY: SOILED UNIFORMS AND BEDDING (IN PORTABLE CARTS), CLEAN UNIFORMS AND BEDDING

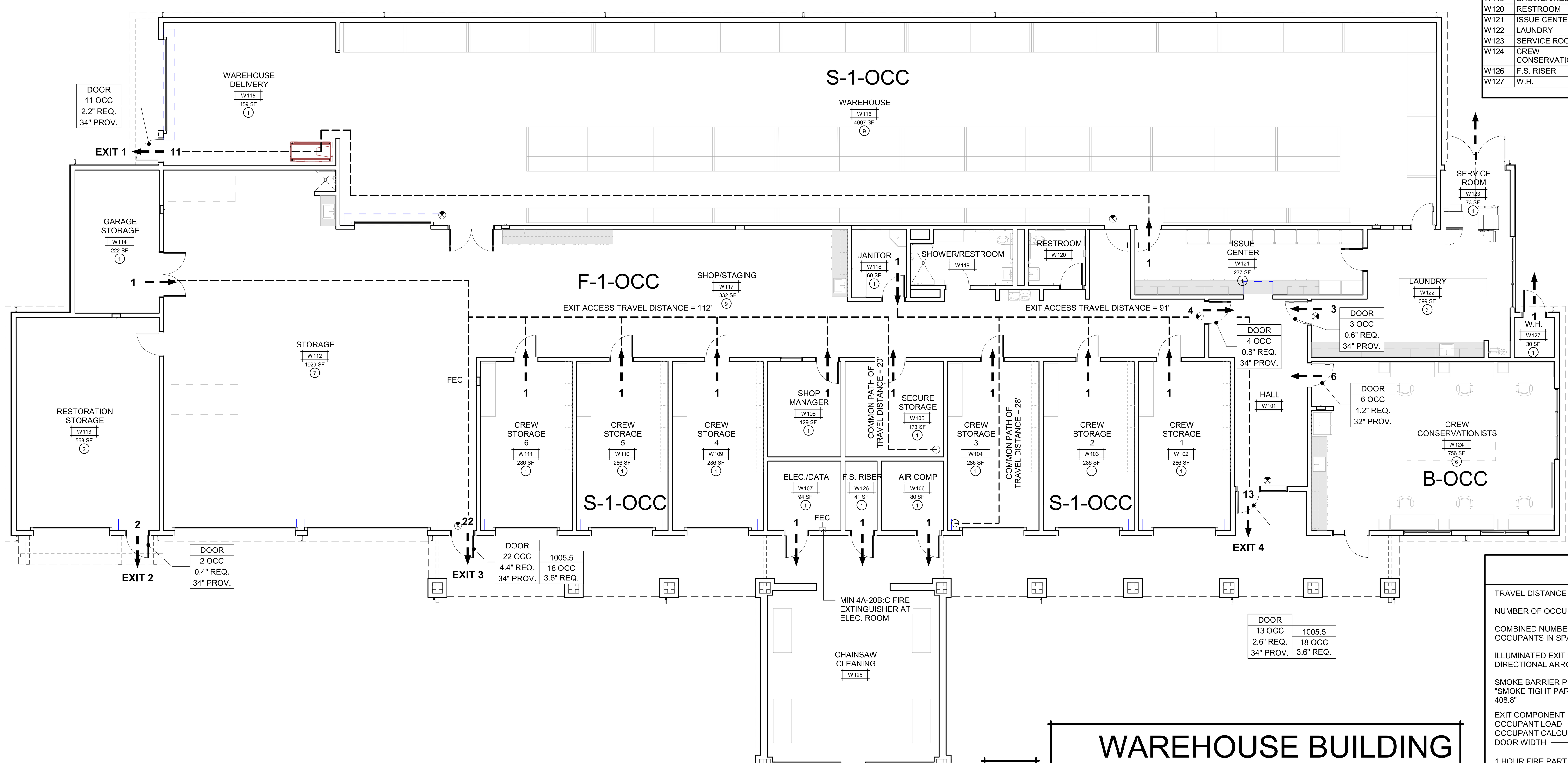

2

WAREHOUSE BUILDING LIFE SAFETY PLAN

SCALE: 1/8" = 1'-0"

LEGEND

TRAVEL DISTANCE
NUMBER OF OCCUPANTS (2)
COMBINED NUMBER OF OCCUPANTS IN SPACE — X → EXIT #
ILLUMINATED EXIT SIGN WITH DIRECTIONAL ARROW
SMOKE BARRIER PER CBC 408.6: "SMOKE TIGHT PARTITION PER CBC 408.8"
EXIT COMPONENT — DOOR
OCCUPANT LOAD — 1 OCC
OCCUPANT CALCULATION — 1" REQ.
DOOR WIDTH — 1" PROV.
1 HOUR FIRE PARTITION
1 HOUR EXIT CORRIDOR

'FE' DENOTES WALL MOUNTED FIRE EXTINGUISHER
'FEC' DENOTES RECESSED FIRE EXTINGUISHER CABINET

USE MIN. 4A-20B:C FIRE EXTINGUISHER IN ELECTRICAL AND DATA ROOMS.

IDENTIFICATION STAMP
DIV. OF THE STATE ARCHITECT
APP: 02-118630 INC:
REVIEWED FOR
SS ☐ FLS ☐ ACS ☑
DATE: 04/13/2021

OFFICE OF THE STATE FIRE MARSHAL
APPROVED FIRE AND PANIC ONLY
Approval of this plan does not authorize or approve any omission or deviation from applicable regulations. Final approval is subject to field inspection. One set of approved plans shall be available on the project site at all times.
PERMIT NO.: 20-N-2332-CP
REVIEWED BY: LITO CATAYLO, OSFM
DATE: 4/ 1 /2021

GENERAL SERVICES
Department of General Services
State of California
Real Estate Services Division
Project Management & Development Branch
707 Third Street, Suite 4-105
West Sacramento, California 95605

NICHOLS MELBURG & ROSSETTO
ARCHITECTS + ENGINEERS
300 Knollcrest Drive
Redding, CA. 96002
(530) 222-3300 (530) 222-3538 FAX
http://www.nmrdesign.com

Copyright © 2020
All ideas, designs, arrangements and plans indicated or represented by this drawing are owned by, and the property of, NICHOLS, MELBURG and ROSSETTO and were created, evolved and developed for use on, and in conjunction with, the specified project. None of such ideas, designs, arrangements or plans shall be used by, or disclosed to any person, firm or corporation for any purpose whatsoever without the written permission of NICHOLS, MELBURG and ROSSETTO.

LICENSE STAMPS
LICENSED ARCHITECT KYLE MATTI C 27504 REN. 10/31/21 STATE OF CALIFORNIA

CONSULTANT

DRAWING STATUS
CONSTRUCTION DOCUMENTS

ISSUE

No.	Date	Description
1	10/20/2020	INITIAL PLAN REVIEW
2	01/22/2021	AGENCY RESUBMITTAL
3	03/22/2021	AGENCY RESUBMITTAL

If drawing is not 30" x 42" it is a reduced print

PROJECT
RESIDENTIAL CENTER, UKIAH: REPLACEMENT OF EXISTING RESIDENTIAL CENTER
440 EAST HILL ROAD
WILLITS, CALIFORNIA 95490
MENDOCINO COUNTY
CALIFORNIA CONSERVATION CORP

Supervisor KJM | Designed DMH | Drawn AMP

DSA Application No. 02-118630

SHEET TITLE
LIFE SAFETY PLAN - ADMIN & WAREHOUSE BUILDINGS

DGS Project Number 000000000001826
NMR Project Number 18-6456

Reference North (NORTH)
Sheet Scale 1/8" = 1'-0"
Sheet Number G110

ISSUE DATE
July 9, 2021

Plot Date: 3/18/2021 3:25:26 PM
File Name: BIM 360://CCC Willits Residential Center/A_CCC-WRC-COMMON.rvt

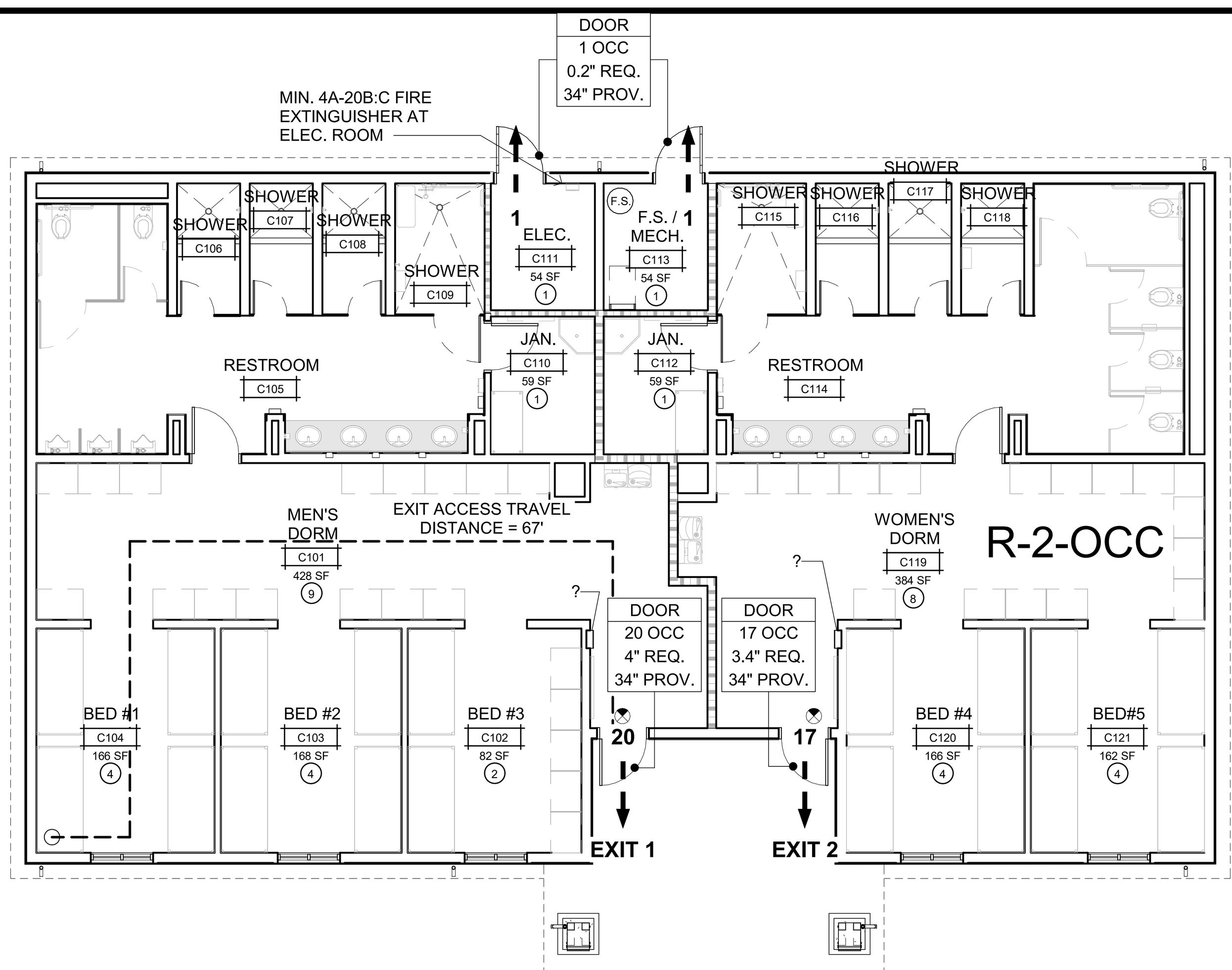

1 COMET LIFE SAFETY PLAN

SCALE: 1/8" = 1'-0"

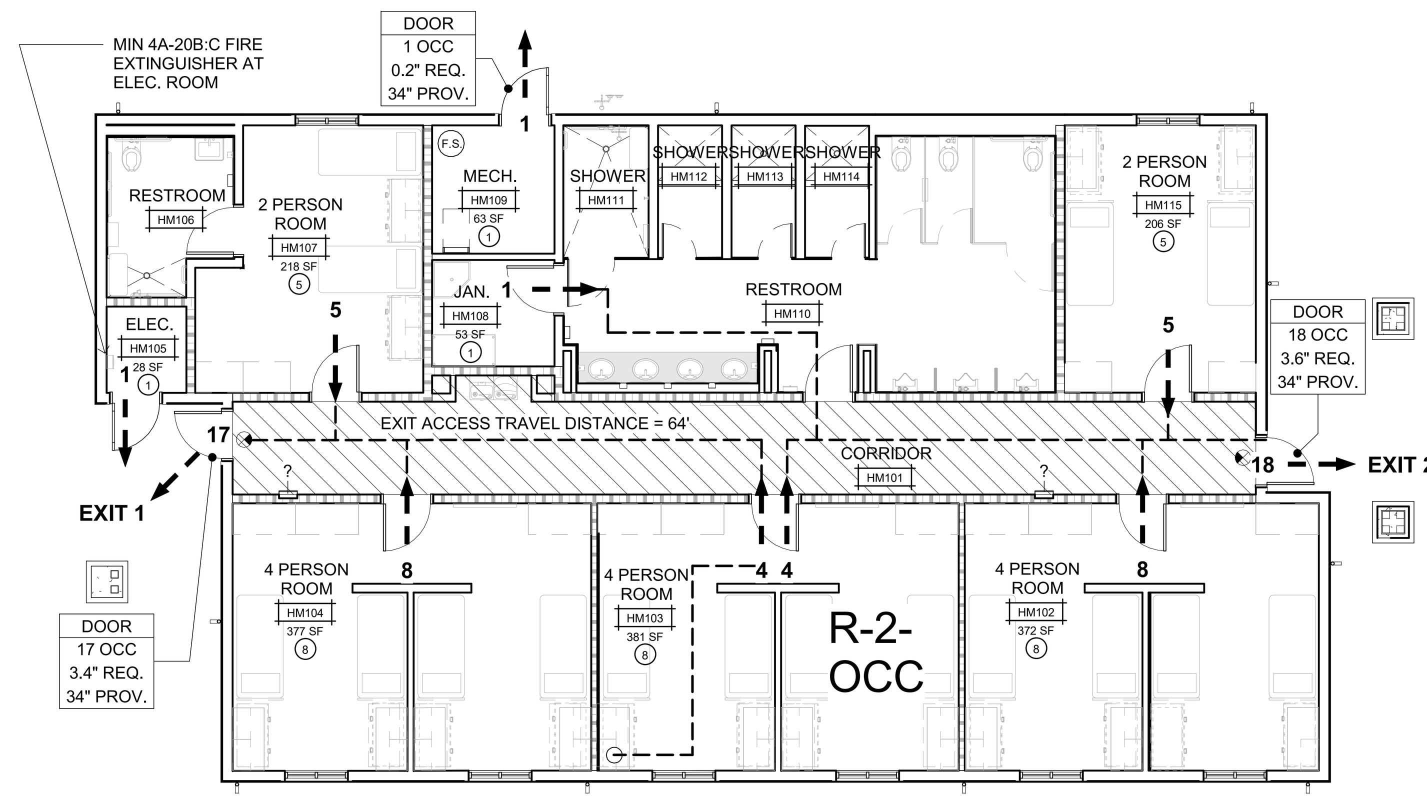

2 MEN HOUSING LIFE SAFETY PLAN

SCALE: 1/8" = 1'-0"

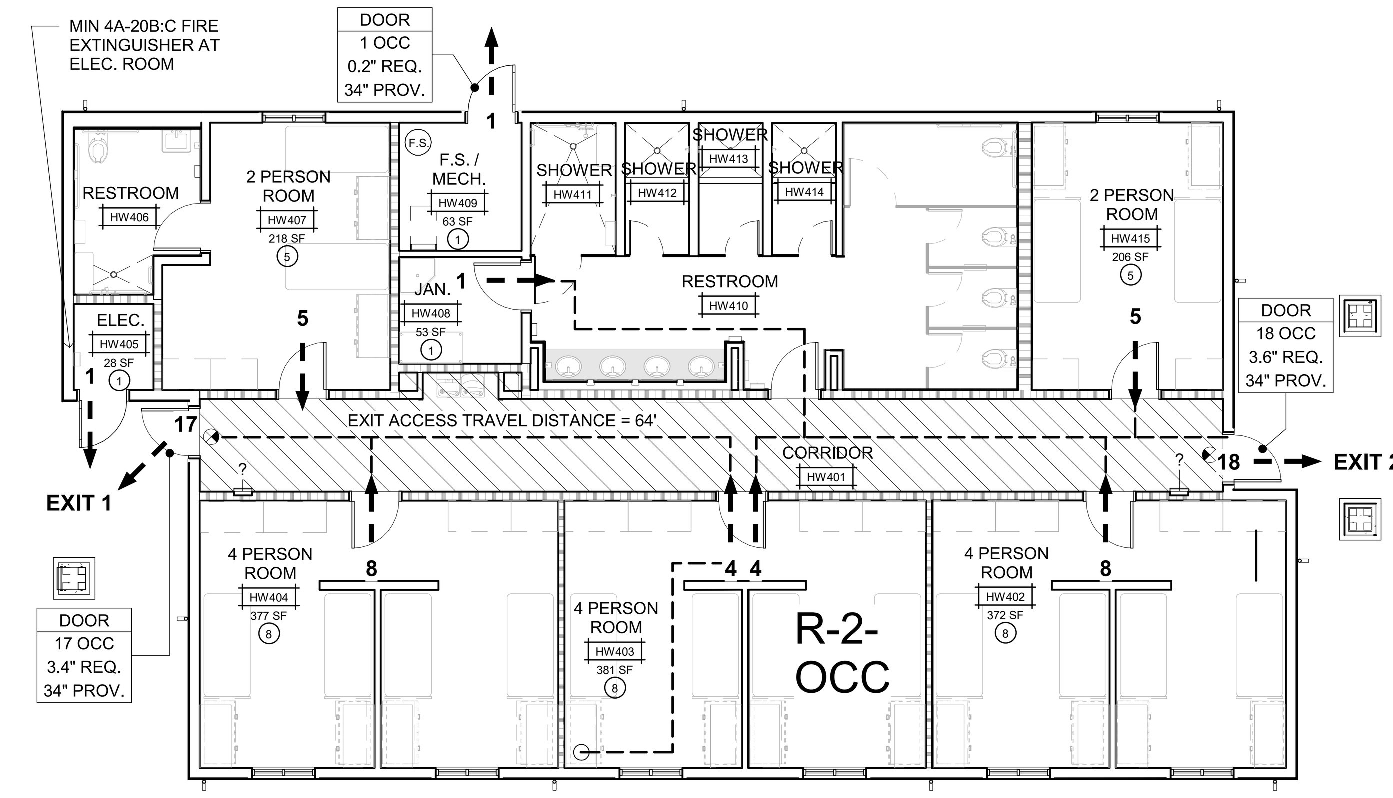

3 WOMEN HOUSING LIFE SAFETY PLAN

SCALE: 1/8" = 1'-0"

COMET OCCUPANCY CALCULATIONS

NO.	NAME	AREA	LOAD FACTOR	OCCUPANT LOAD
C101	MEN'S DORM	428 SF	50 SF	9
C102	BED #3	82 SF	50 SF	2
C103	BED #2	168 SF	50 SF	4
C104	BED #1	166 SF	50 SF	4
C105	RESTROOM	304 SF	0 SF	
C106	SHOWER	34 SF	0 SF	
C107	SHOWER	34 SF	0 SF	
C108	SHOWER	34 SF	0 SF	
C109	SHOWER	48 SF	0 SF	
C110	JAN.	59 SF	300 SF	1
C111	ELEC.	54 SF	300 SF	1
C112	JAN.	59 SF	300 SF	1
C113	F.S. / MECH.	54 SF	300 SF	1
C114	RESTROOM	336 SF	0 SF	
C115	SHOWER	48 SF	0 SF	
C116	SHOWER	34 SF	0 SF	
C117	SHOWER	34 SF	0 SF	
C118	SHOWER	33 SF	0 SF	
C119	WOMEN'S DORM	384 SF	50 SF	8
C120	BED #4	166 SF	50 SF	4
C121	BED#5	162 SF	50 SF	4
				39

BUILDING EXITING REVIEW

EXIT WIDTH CALCULATIONS:

EXIT 1: 20 OCC. X 0.2" = 4.0" REQUIRED
1 DOOR @ 34" = 34" PROVIDED SO OK

EXIT 2: 17 OCC. X 0.2" = 3.4" REQUIRED
1 DOOR @ 34" = 34" PROVIDED SO OK

PER CBC 1030.1, EXCEPTION 4, EMERGENCY ESCAPE AND RESCUE OPENINGS ARE NOT REQUIRED FROM BASEMENTS OR SLEEPING ROOMS THAT AN EXIT DOOR OR EXIT ACCESS DOOR THAT OPENS DIRECTLY INTOA PUBLIC WAY OR TO A YARD, COURT OR EXTERIOR EXIT BALCONY THAT OPENS TO A PUBLIC WAY. BOTH EXIT DOORS IN THE COMET OPEN DIRECTLY TO A COURT THAT CONNECTS TO AN EMERGENCY FIRE LANE.

ACCESSIBILITY

BUILDING USAGE:
- DORMITORY (CONSIDERED PUBLIC HOUSING FACILITY AND IS SUBJECT TO CBC CHAPTER 11B REQUIREMENTS, INCLUDING 11B-233.3.)

COMMUNICATION FEATURES:
- PER CBC 11B-233.3 & 11B-233.3.2.3; THE RESIDENTIAL DWELLING UNIT SHALL BE PROVIDED WITH COMMUNICATION FEATURES COMPLYING WITH 11B-809.5.

WINDOWS:
- PER CBC 11B-229, WHERE GLAZED OPENINGS ARE PROVIDED IN ACCESSIBLE ROOMS OR SPACES FOR OPERATION BY OCCUPANTS, AT LEAST ONE OPENING SHALL COMPLY WITH SECTION 11B-309.
- PER CBC 11B-229; EXCEPTION 2; GLAZED OPENINGS IN GUEST ROOMS REQUIRED TO PROVIDE COMMUNICATION FEATURES SHALL NOT BE REQUIRED TO COMPLY WITH 11B-229.

COMET BUILDING CODE ANALYSIS

BUILDING OCCUPANCY CLASSIFICATION AND USE:
- GROUP R-2 (DORMITORY)

BUILDING CONSTRUCTION TYPE:
- TYPE V-B (SPRINKLERED)

NUMBER OF STORIES:
- ONE STORY

ACTUAL BUILDING HEIGHT:
- 25'-10" (TOP OF MAIN BUILDING ROOF)

TOTAL BUILDING AREA:
- CONDITIONED/OCCUPIED FLOOR AREA: 3,233 SQ. FT.
- FIRE AREA INCLUDING SUPPORTED OVERHANGS: 3,724 SQ. FT.

SEPARATED OR NON-SEPARATED USE:
- NON-SEPARATED
- R-2 SLEEPING UNITS SEPARATED FROM OTHER SLEEPING UNITS AND FROM OTHER OCCUPANCIES CONTIGUOUS TO THEM IN ACCORDANCE WITH CBC SECTION 420

ALLOWABLE BUILDING AREA (PER CBC TABLE 506.2): 28,000 SQ. FT. (R-2 OCCUPANCY)

ALLOWABLE BUILDING HEIGHT LIMITS (PER CBC TABLE 504.3 & 504.4): 3 STORIES / 60 FEET (R-2 OCCUPANCY)

AUTOMATIC FIRE SPRINKLER SYSTEM:
- REQUIRED PER CBC 420.4 FOR GROUP R OCCUPANCIES
- WET PIPE SYSTEM PROVIDED FOR BUILDING INCLUDING ATTIC SPACES AND OVERHANGS WHERE REQUIRED

SMOKE DETECTION AND FIRE ALARM SYSTEMS:
- REQUIRED PER CBC 420.5 FOR GROUP R OCCUPANCIES
- SMOKE DETECTION AND FIRE ALARM SYSTEM PROVIDED FOR BUILDING
- MANUAL PULL STATIONS, HORN/STROBE DEVICES, SPRINKLER WATER FLOW MONITORING

OTHER FIRE PROTECTION SYSTEM: NO

SMOKE CONTROL SYSTEM: NO

OCCUPANT LOAD FOR ENTIRE BUILDING: 39

FIRE HAZARD SEVERITY ZONE: NO

SEISMIC JOINTS: NO

EMERGENCY RESPONDER RADIO COVERAGE: YES

FIRE RESISTIVE REQUIREMENTS

- FOR TYPE V-B CONSTRUCTION - NONE REQUIRED (CBC TABLE 601)
- FOR EXTERIOR WALLS BASED ON FIRE SEPARATION DISTANCE - NONE REQUIRED BASED ON F.S.D. OF 20' AND V-B CONSTRUCTION AND GROUP R OCCUPANCY
- SEPARATION WALLS: WALLS SEPARATING DWELLING UNITS IN THE SAME BUILDING, WALLS SEPARATING SLEEPING UNITS IN THE SAME BUILDING AND WALLS SEPARATING DWELLING OR SLEEPING UNITS FROM OTHER OCCUPANCIES CONTIGUOUS TO THEM IN THE SAME BUILDING SHALL BE CONSTRUCTED AS FIRE PARTITIONS IN ACCORDANCE WITH SECTION 708. (CBC 420.2)
  1. DWELLING UNIT AND SLEEPING UNIT SEPARATIONS IN BUILDINGS OF TYPE VB CONSTRUCTION SHALL HAVE FIRE-RESISTANCE RATINGS OF NOT LESS THAN 1/2 HOUR IN BUILDINGS EQUIPPED THROUGHOUT WITH AN AUTOMATIC SPRINKLER SYSTEM IN ACCORDANCE WITH SECTION 903.3.1.1. (CBC 708.3, EXCEPTION 2)
  2. FIREBLOCKING OR DRAFTSTOPPING IS NOT REQUIRED AT THE PARTITION LINE IN BUILDINGS EQUIPPED WITH AN AUTOMATIC SPRINKLER SYSTEM INSTALLED THROUGHOUT IN ACCORDANCE WITH SECTION 903.3.1.1 OR 903.3.1.2, PROVIDED THAT AUTOMATIC SPRINKLERS ARE INSTALLED IN ALL COMBUSTIBLE FLOOR/CEILING AND ROOF/CEILING SPACES.
- 1 HOUR FIRE PARTITIONS PROVIDED BETWEEN EACH SLEEPING UNIT AND SLEEPING UNITS TO OTHER CONTIGUOUS SPACES.
- AUTOMATIC FIRE SPRINKLER SYSTEM COMPLYING WITH CBC 903.3.1.1. PROVIDED THROUGHOUT BUILDING IN ALL FLOOR/CEILING, ROOF/ATTIC AS WELL AS OVERHANG SPACES (WHERE REQUIRED).
- CORRIDORS SERVING GREATER THAN 10 OCCUPANTS IN R-2 OCCUPANCY WITH SPRINKLER SYSTEM REQUIRES 1-HOUR FIRE-RESISTANCE RATING

MEN HOUSING BUILDING OCCUPANCY CALCULATIONS

WT	NAME	AREA	LOAD FACTOR	OCCUPANT LOAD
HM101	CORRIDOR	391 SF	0 SF	
HM102	4 PERSON ROOM	372 SF	50 SF	8
HM103	4 PERSON ROOM	381 SF	50 SF	8
HM104	4 PERSON ROOM	377 SF	50 SF	8
HM105	ELEC.	28 SF	300 SF	1
HM106	RESTROOM	74 SF	0 SF	
HM107	2 PERSON ROOM	218 SF	50 SF	5
HM108	JAN.	53 SF	300 SF	1
HM109	MECH.	63 SF	300 SF	1
HM110	RESTROOM	333 SF	0 SF	
HM111	SHOWER	46 SF	0 SF	
HM112	SHOWER	34 SF	0 SF	
HM113	SHOWER	34 SF	0 SF	
HM114	SHOWER	34 SF	0 SF	
HM115	2 PERSON ROOM	206 SF	50 SF	5
				37

BUILDING EXITING REVIEW

EXIT WIDTH CALCULATIONS:

EXIT 1: 17 OCC. X 0.2" = 3.4" REQUIRED
1 DOOR @ 34" = 34" PROVIDED SO OK

EXIT 2: 18 OCC. X 0.2" = 3.6" REQUIRED
1 DOOR @ 34" = 34" PROVIDED SO OK

PER CBC 1030.1, EXCEPTION 4, EMERGENCY ESCAPE AND RESCUE OPENINGS ARE NOT REQUIRED FROM BASEMENTS OR SLEEPING ROOMS THAT AN EXIT DOOR OR EXIT ACCESS DOOR THAT OPENS DIRECTLY INTOA PUBLIC WAY OR TO A YARD, COURT OR EXTERIOR EXIT BALCONY THAT OPENS TO A PUBLIC WAY. BOTH EXIT DOORS OPEN DIRECTLY TO A COURT THAT CONNECTS TO AN EMERGENCY FIRE LANE.

ACCESSIBILITY

BUILDING USAGE:
- DORMITORY (CONSIDERED PUBLIC HOUSING FACILITY AND IS SUBJECT TO CBC CHAPTER 11B REQUIREMENTS, INCLUDING 11B-233.3.)

COMMUNICATION FEATURES:
- PER CBC 11B-233.3 & 11B-233.3.2.3; THE RESIDENTIAL DWELLING UNIT SHALL BE PROVIDED WITH COMMUNICATION FEATURES COMPLYING WITH 11B-809.5.

WINDOWS:
- PER CBC 11B-229, WHERE GLAZED OPENINGS ARE PROVIDED IN ACCESSIBLE ROOMS OR SPACES FOR OPERATION BY OCCUPANTS, AT LEAST ONE OPENING SHALL COMPLY WITH SECTION 11B-309.
- PER CBC 11B-229; EXCEPTION 2; GLAZED OPENINGS IN GUEST ROOMS REQUIRED TO PROVIDE COMMUNICATION FEATURES SHALL NOT BE REQUIRED TO COMPLY WITH 11B-229.

MEN HOUSING BUILDING CODE ANALYSIS

BUILDING OCCUPANCY CLASSIFICATION AND USE:
- GROUP R-2 (DORMITORY)

BUILDING CONSTRUCTION TYPE:
- TYPE V-B (SPRINKLERED)

NUMBER OF STORIES:
- ONE STORY

ACTUAL BUILDING HEIGHT:
- 25'-2" (TOP OF MAIN BUILDING ROOF)

TOTAL BUILDING AREA:
- CONDITIONED/OCCUPIED FLOOR AREA: 3,005 SQ. FT.
- FIRE AREA INCLUDING SUPPORTED OVERHANGS: 3,351 SQ. FT.

SEPARATED OR NON-SEPARATED USE:
- NON-SEPARATED
- R-2 SLEEPING UNITS SEPARATED FROM OTHER SLEEPING UNITS AND FROM OTHER OCCUPANCIES CONTIGUOUS TO THEM IN ACCORDANCE WITH CBC SECTION 420

ALLOWABLE BUILDING AREA (PER CBC TABLE 506.2): 28,000 SQ. FT. (R-2 OCCUPANCY)

ALLOWABLE BUILDING HEIGHT LIMITS (PER CBC TABLE 504.3 & 504.4): 3 STORIES / 60 FEET (R-2 OCCUPANCY)

AUTOMATIC FIRE SPRINKLER SYSTEM:
- REQUIRED PER CBC 420.4 FOR GROUP R OCCUPANCIES
- WET PIPE SYSTEM PROVIDED FOR BUILDING INCLUDING ATTIC SPACES AND OVERHANGS WHERE REQUIRED

SMOKE DETECTION AND FIRE ALARM SYSTEMS:
- REQUIRED PER CBC 420.5 FOR GROUP R OCCUPANCIES
- SMOKE DETECTION AND FIRE ALARM SYSTEM PROVIDED FOR BUILDING
- MANUAL PULL STATIONS, HORN/STROBE DEVICES, SPRINKLER WATER FLOW MONITORING

OTHER FIRE PROTECTION SYSTEM: NO

SMOKE CONTROL SYSTEM: NO

OCCUPANT LOAD FOR ENTIRE BUILDING: 37

FIRE HAZARD SEVERITY ZONE: NO

SEISMIC JOINTS: NO

EMERGENCY RESPONDER RADIO COVERAGE: YES

FIRE RESISTIVE REQUIREMENTS

- FOR TYPE V-B CONSTRUCTION - NONE REQUIRED (CBC TABLE 601)
- FOR EXTERIOR WALLS BASED ON FIRE SEPARATION DISTANCE - NONE REQUIRED BASED ON F.S.D. OF 20' AND V-B CONSTRUCTION AND GROUP R OCCUPANCY
- SEPARATION WALLS: WALLS SEPARATING DWELLING UNITS IN THE SAME BUILDING, WALLS SEPARATING SLEEPING UNITS IN THE SAME BUILDING AND WALLS SEPARATING DWELLING OR SLEEPING UNITS FROM OTHER OCCUPANCIES CONTIGUOUS TO THEM IN THE SAME BUILDING SHALL BE CONSTRUCTED AS FIRE PARTITIONS IN ACCORDANCE WITH SECTION 708. (CBC 420.2)
  1. DWELLING UNIT AND SLEEPING UNIT SEPARATIONS IN BUILDINGS OF TYPE VB CONSTRUCTION SHALL HAVE FIRE-RESISTANCE RATINGS OF NOT LESS THAN 1/2 HOUR IN BUILDINGS EQUIPPED THROUGHOUT WITH AN AUTOMATIC SPRINKLER SYSTEM IN ACCORDANCE WITH SECTION 903.3.1.1. (CBC 708.3, EXCEPTION 2)
  2. FIREBLOCKING OR DRAFTSTOPPING IS NOT REQUIRED AT THE PARTITION LINE IN BUILDINGS EQUIPPED WITH AN AUTOMATIC SPRINKLER SYSTEM INSTALLED THROUGHOUT IN ACCORDANCE WITH SECTION 903.3.1.1 OR 903.3.1.2, PROVIDED THAT AUTOMATIC SPRINKLERS ARE INSTALLED IN ALL COMBUSTIBLE FLOOR/CEILING AND ROOF/CEILING SPACES.
- 1 HOUR FIRE PARTITIONS PROVIDED BETWEEN EACH SLEEPING UNIT AND SLEEPING UNITS TO OTHER CONTIGUOUS SPACES.
- AUTOMATIC FIRE SPRINKLER SYSTEM COMPLYING WITH CBC 903.3.1.1. PROVIDED THROUGHOUT BUILDING IN ALL FLOOR/CEILING, ROOF/ATTIC AS WELL AS OVERHANG SPACES (WHERE REQUIRED).

WOMEN HOUSING BUILDING OCCUPANCY CALCULATIONS

WT	NAME	AREA	LOAD FACTOR	OCCUPANT LOAD
HW401	CORRIDOR	391 SF	0 SF	
HW402	4 PERSON ROOM	372 SF	50 SF	8
HW403	4 PERSON ROOM	381 SF	50 SF	8
HW404	4 PERSON ROOM	377 SF	50 SF	8
HW405	ELEC.	28 SF	300 SF	1
HW406	RESTROOM	76 SF	0 SF	
HW407	2 PERSON ROOM	218 SF	50 SF	5
HW408	JAN.	53 SF	300 SF	1
HW409	F.S. / MECH.	63 SF	300 SF	1
HW410	RESTROOM	336 SF	0 SF	
HW411	SHOWER	46 SF	0 SF	
HW412	SHOWER	34 SF	0 SF	
HW413	SHOWER	34 SF	0 SF	
HW414	SHOWER	34 SF	0 SF	
HW415	2 PERSON ROOM	206 SF	50 SF	5
				37

BUILDING EXITING REVIEW

EXIT WIDTH CALCULATIONS:

EXIT 1: 17 OCC. X 0.2" = 3.4" REQUIRED
1 DOOR @ 34" = 34" PROVIDED SO OK

EXIT 2: 18 OCC. X 0.2" = 3.6" REQUIRED
1 DOOR @ 34" = 34" PROVIDED SO OK

PER CBC 1030.1, EXCEPTION 4, EMERGENCY ESCAPE AND RESCUE OPENINGS ARE NOT REQUIRED FROM BASEMENTS OR SLEEPING ROOMS THAT AN EXIT DOOR OR EXIT ACCESS DOOR THAT OPENS DIRECTLY INTOA PUBLIC WAY OR TO A YARD, COURT OR EXTERIOR EXIT BALCONY THAT OPENS TO A PUBLIC WAY. BOTH EXIT DOORS OPEN DIRECTLY TO A COURT THAT CONNECTS TO AN EMERGENCY FIRE LANE.

ACCESSIBILITY

BUILDING USAGE:
- DORMITORY (CONSIDERED PUBLIC HOUSING FACILITY AND IS SUBJECT TO CBC CHAPTER 11B REQUIREMENTS, INCLUDING 11B-233.3.)

COMMUNICATION FEATURES:
- PER CBC 11B-233.3 & 11B-233.3.2.3; THE RESIDENTIAL DWELLING UNIT SHALL BE PROVIDED WITH COMMUNICATION FEATURES COMPLYING WITH 11B-809.5.

WINDOWS:
- PER CBC 11B-229, WHERE GLAZED OPENINGS ARE PROVIDED IN ACCESSIBLE ROOMS OR SPACES FOR OPERATION BY OCCUPANTS, AT LEAST ONE OPENING SHALL COMPLY WITH SECTION 11B-309.
- PER CBC 11B-229; EXCEPTION 2; GLAZED OPENINGS IN GUEST ROOMS REQUIRED TO PROVIDE COMMUNICATION FEATURES SHALL NOT BE REQUIRED TO COMPLY WITH 11B-229.

WOMEN HOUSING BUILDING CODE ANALYSIS

BUILDING OCCUPANCY CLASSIFICATION AND USE:
- GROUP R-2 (DORMITORY)

BUILDING CONSTRUCTION TYPE:
- TYPE V-B (SPRINKLERED)

NUMBER OF STORIES:
- ONE STORY

ACTUAL BUILDING HEIGHT:
- 25'-2" (TOP OF MAIN BUILDING ROOF)

TOTAL BUILDING AREA:
- CONDITIONED/OCCUPIED FLOOR AREA: 3,005 SQ. FT.
- FIRE AREA INCLUDING SUPPORTED OVERHANGS: 3,351 SQ. FT.

SEPARATED OR NON-SEPARATED USE:
- NON-SEPARATED
- R-2 SLEEPING UNITS SEPARATED FROM OTHER SLEEPING UNITS AND FROM OTHER OCCUPANCIES CONTIGUOUS TO THEM IN ACCORDANCE WITH CBC SECTION 420

ALLOWABLE BUILDING AREA (PER CBC TABLE 506.2): 28,000 SQ. FT. (R-2 OCCUPANCY)

ALLOWABLE BUILDING HEIGHT LIMITS (PER CBC TABLE 504.3 & 504.4): 3 STORIES / 60 FEET (R-2 OCCUPANCY)

AUTOMATIC FIRE SPRINKLER SYSTEM:
- REQUIRED PER CBC 420.4 FOR GROUP R OCCUPANCIES
- WET PIPE SYSTEM PROVIDED FOR BUILDING INCLUDING ATTIC SPACES AND OVERHANGS WHERE REQUIRED

SMOKE DETECTION AND FIRE ALARM SYSTEMS:
- REQUIRED PER CBC 420.5 FOR GROUP R OCCUPANCIES
- SMOKE DETECTION AND FIRE ALARM SYSTEM PROVIDED FOR BUILDING
- MANUAL PULL STATIONS, HORN/STROBE DEVICES, SPRINKLER WATER FLOW MONITORING

OTHER FIRE PROTECTION SYSTEM: NO

SMOKE CONTROL SYSTEM: NO

OCCUPANT LOAD FOR ENTIRE BUILDING: 37

FIRE HAZARD SEVERITY ZONE: NO

SEISMIC JOINTS: NO

EMERGENCY RESPONDER RADIO COVERAGE: YES

FIRE RESISTIVE REQUIREMENTS

- FOR TYPE V-B CONSTRUCTION - NONE REQUIRED (CBC TABLE 601)
- FOR EXTERIOR WALLS BASED ON FIRE SEPARATION DISTANCE - NONE REQUIRED BASED ON F.S.D. OF 20' AND V-B CONSTRUCTION AND GROUP R OCCUPANCY
- SEPARATION WALLS: WALLS SEPARATING DWELLING UNITS IN THE SAME BUILDING, WALLS SEPARATING SLEEPING UNITS IN THE SAME BUILDING AND WALLS SEPARATING DWELLING OR SLEEPING UNITS FROM OTHER OCCUPANCIES CONTIGUOUS TO THEM IN THE SAME BUILDING SHALL BE CONSTRUCTED AS FIRE PARTITIONS IN ACCORDANCE WITH SECTION 708. (CBC 420.2)
  1. DWELLING UNIT AND SLEEPING UNIT SEPARATIONS IN BUILDINGS OF TYPE VB CONSTRUCTION SHALL HAVE FIRE-RESISTANCE RATINGS OF NOT LESS THAN 1/2 HOUR IN BUILDINGS EQUIPPED THROUGHOUT WITH AN AUTOMATIC SPRINKLER SYSTEM IN ACCORDANCE WITH SECTION 903.3.1.1. (CBC 708.3, EXCEPTION 2)
  2. FIREBLOCKING OR DRAFTSTOPPING IS NOT REQUIRED AT THE PARTITION LINE IN BUILDINGS EQUIPPED WITH AN AUTOMATIC SPRINKLER SYSTEM INSTALLED THROUGHOUT IN ACCORDANCE WITH SECTION 903.3.1.1 OR 903.3.1.2, PROVIDED THAT AUTOMATIC SPRINKLERS ARE INSTALLED IN ALL COMBUSTIBLE FLOOR/CEILING AND ROOF/CEILING SPACES.
- 1 HOUR FIRE PARTITIONS PROVIDED BETWEEN EACH SLEEPING UNIT AND SLEEPING UNITS TO OTHER CONTIGUOUS SPACES.
- AUTOMATIC FIRE SPRINKLER SYSTEM COMPLYING WITH CBC 903.3.1.1. PROVIDED THROUGHOUT BUILDING IN ALL FLOOR/CEILING, ROOF/ATTIC AS WELL AS OVERHANG SPACES (WHERE REQUIRED).

LEGEND

TRAVEL DISTANCE	●— — — →
NUMBER OF OCCUPANTS	(2)
COMBINED NUMBER OF OCCUPANTS IN SPACE	X — → EXIT #
ILLUMINATED EXIT SIGN WITH DIRECTIONAL ARROW	⊗
SMOKE BARRIER PER CBC 408.6: "SMOKE TIGHT PARTITION PER CBC 408.8"	▬ ▬ ▬ ▬
EXIT COMPONENT / OCCUPANT LOAD / OCCUPANT CALCULATION / DOOR WIDTH	DOOR / 1 OCC / 1" REQ. / 1" PROV.
1 HOUR FIRE PARTITION	
1 HOUR EXIT CORRIDOR	

'FE' DENOTES WALL MOUNTED FIRE EXTINGUISHER
'FEC' DENOTES RECESSED FIRE EXTINGUISHER CABINET

USE MIN. 4A-20B:C FIRE EXTINGUISHER IN ELECTRICAL AND DATA ROOMS.

IDENTIFICATION STAMP
DIV. OF THE STATE ARCHITECT
APP: 02-118630 INC:
REVIEWED FOR
SS ☐ FLS ☐ ACS ☑
DATE: 04/13/2021

OFFICE OF THE STATE FIRE MARSHAL
APPROVED FIRE AND PANIC ONLY
Approval of this plan does not authorize or approve any omission or deviation from applicable regulations. Final approval is subject to field inspection. One set of approved plans shall be available on the project site at all times.
PERMIT NO. 20-N-2332-CP
REVIEWED BY: LITO CATAYLO, OSFM
DATE: 4/1/2021

GENERAL SERVICES
Department of General Services
State of California
Real Estate Services Division
Project Management & Development Branch
707 Third Street, Suite 4-105
West Sacramento, California 95605

NICHOLS MELBURG & ROSSETTO
ARCHITECTS + ENGINEERS
300 Knollcrest Drive
Redding, CA. 96002
(530) 222-3300 (530) 222-3538 FAX
http://www.nmrdesign.com

Copyright © 2020
All ideas, designs, arrangements and plans indicated or represented by this drawing are owned by, and the property of, NICHOLS, MELBURG and ROSSETTO and were created, evolved and developed for use on, and in conjunction with, the specified project. None of such ideas, designs, arrangements or plans shall be used by, or disclosed to any person, firm or corporation for any purpose whatsoever without the written permission of NICHOLS, MELBURG and ROSSETTO.

LICENSE STAMPS
LICENSED ARCHITECT KYLE MATTI C 27504 REN. 10/31/21 STATE OF CALIFORNIA

CONSULTANT

DRAWING STATUS
CONSTRUCTION DOCUMENTS

ISSUE

No.	Date	Description
1	10/20/2020	INITIAL PLAN REVIEW
2	01/22/2021	AGENCY RESUBMITTAL
3	03/22/2021	AGENCY RESUBMITTAL

If drawing is not 30" x 42" it is a reduced print

PROJECT
RESIDENTIAL CENTER, UKIAH: REPLACEMENT OF EXISTING RESIDENTIAL CENTER
440 EAST HILL ROAD
WILLITS, CALIFORNIA 95490
MENDOCINO COUNTY
CALIFORNIA CONSERVATION CORP

Supervisor	Designed	Drawn
KJM	DMH	NMR

DSA Application No.
02-118630

SHEET TITLE
LIFE SAFETY PLAN - COMET & HOUSING BUILDINGS

DGS Project Number 000000000001826
NMR Project Number 18-6456

Reference North — NORTH
Sheet Scale 1/8" = 1'-0"
Sheet Number G111

ISSUE DATE
July 9, 2021

Plot Date: 3/18/2021 3:26:00 PM
File Name: BIM 360://CCC Willits Residential Center/A_CCC-WRC-COMMON.rvt

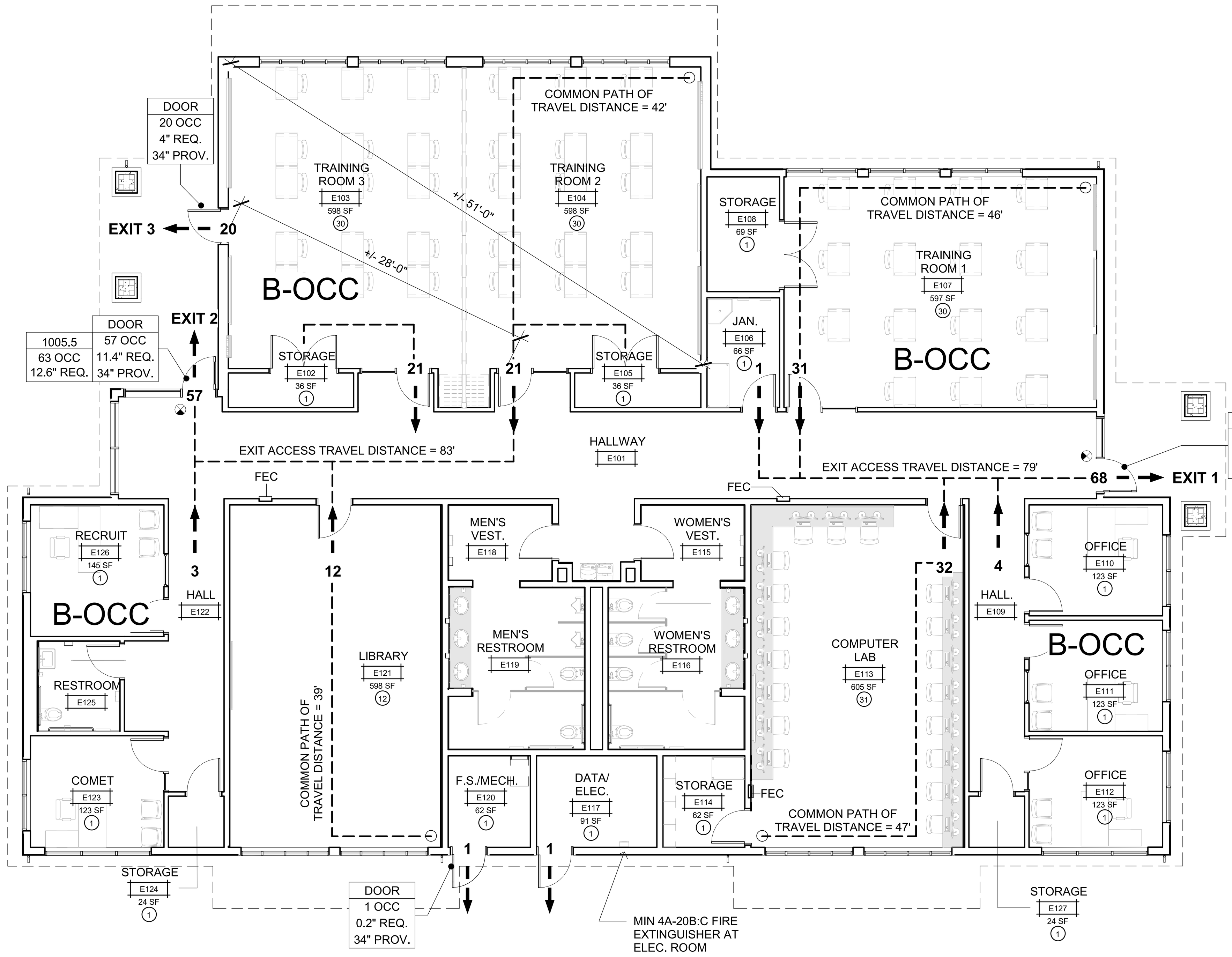

1 EDUCATION BUILDING LIFE SAFETY PLAN

SCALE: 1/8" = 1'-0"

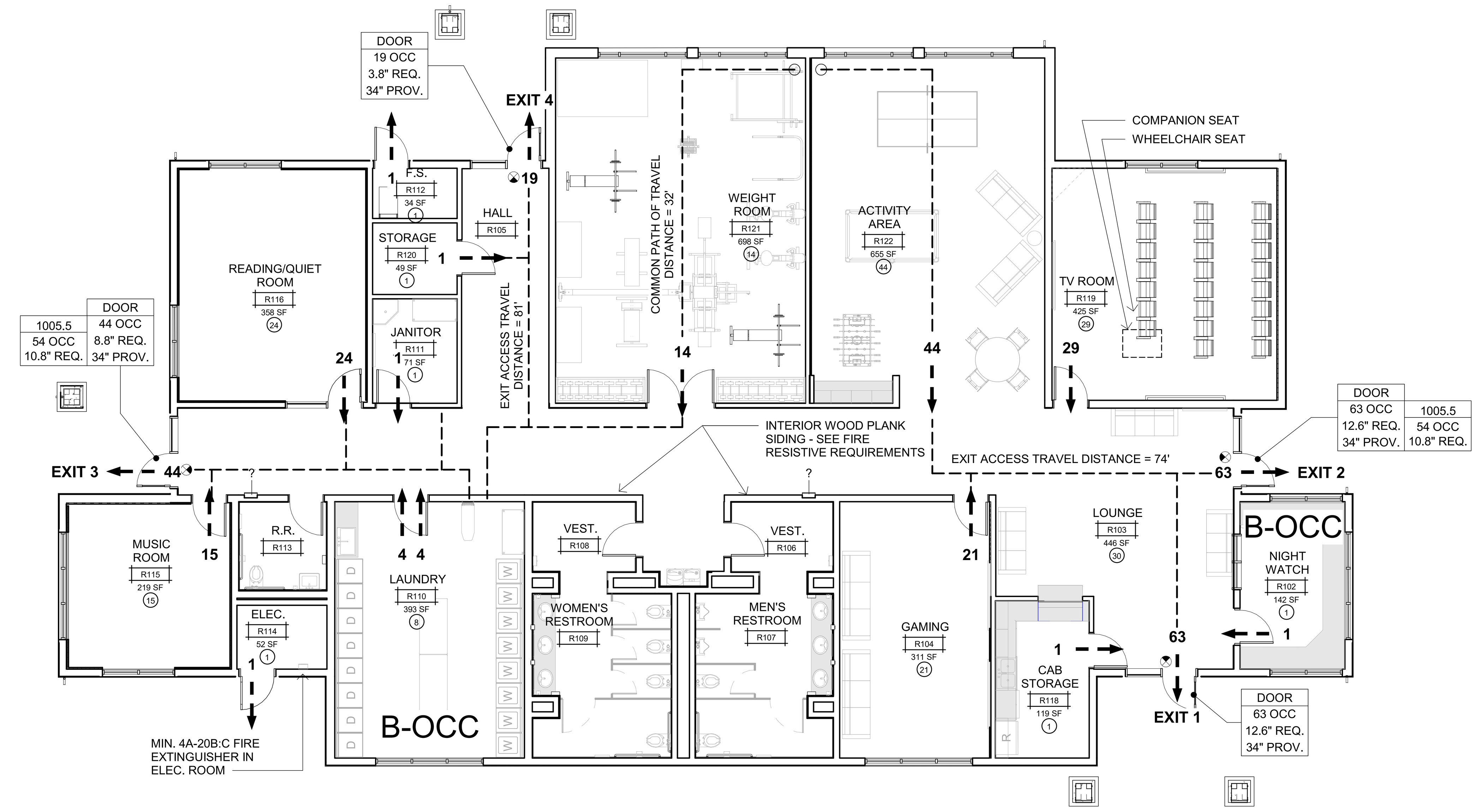

2 RECREATION BUILDING LIFE SAFETY PLAN

SCALE: 1/8" = 1'-0"

EDUCATION BUILDING OCCUPANCY CALCULATIONS

WT	NAME	AREA	LOAD FACTOR	OCCUPANT LOAD
E101	HALLWAY	813 SF	0 SF	
E102	STORAGE	36 SF	300 SF	1
E103	TRAINING ROOM 3	598 SF	20 SF	30
E104	TRAINING ROOM 2	598 SF	20 SF	30
E105	STORAGE	36 SF	300 SF	1
E106	JAN.	66 SF	300 SF	1
E107	TRAINING ROOM 1	597 SF	20 SF	30
E108	STORAGE	69 SF	300 SF	1
E109	HALL.	134 SF	0 SF	
E110	OFFICE	123 SF	150 SF	1
E111	OFFICE	123 SF	150 SF	1
E112	OFFICE	123 SF	150 SF	1
E113	COMPUTER LAB	605 SF	20 SF	31
E114	STORAGE	62 SF	300 SF	1
E115	WOMEN'S VEST.	65 SF	0 SF	
E116	WOMEN'S RESTROOM	178 SF	0 SF	
E117	DATA/ ELEC.	91 SF	300 SF	1
E118	MEN'S VEST.	65 SF	0 SF	
E119	MEN'S RESTROOM	179 SF		
E120	F.S./MECH.	62 SF	300 SF	1
E121	LIBRARY	598 SF	50 SF	12
E122	HALL	167 SF	0 SF	
E123	COMET	123 SF	150 SF	1
E124	STORAGE	24 SF	300 SF	1
E125	RESTROOM	60 SF	0 SF	
E126	RECRUIT	145 SF	150 SF	1
E127	STORAGE	24 SF	300 SF	1
				147

BUILDING EXITING REVIEW

EXIT WIDTH CALCULATIONS:

EXIT 1:	68 OCC. X 0.2"	=	13.6" REQUIRED
	1 DOOR @ 34"	=	34" PROVIDED SO OK
EXIT 2:	57 OCC. X 0.2"	=	11.4" REQUIRED
	1 DOOR @ 34"	=	34" PROVIDED SO OK
EXIT 3:	20 OCC. X 0.2"	=	4.0" REQUIRED
	1 DOOR @ 34"	=	34" PROVIDED SO OK

ADDITIONAL EXIT PROVIDED FOR WHEN TRAINING ROOMS 2 & 3 ARE COMBINED INTO ONE ROOM. EXITS ARE MORE THAN 1/3 THE ROOM DIAGONAL DISTANCE APART.

EDUCATION BUILDING CODE ANALYSIS

OCCUPANCY CLASSIFICATION:
- B (OFFICES, TRAINING ROOMS)

ACCESSORY OCCUPANCY CLASSIFICATION:
- S-2 (STORAGE, JANITOR) 317 SQ. FT. / 6,155 = .05 = 5%

CONSTRUCTION TYPE:
- V-B (FULLY SPRINKLERED)

NUMBER OF STORIES:
- ONE STORY

ACTUAL BUILDING HEIGHT
- 31'-10" (TOP OF MAIN ROOF)

BUILDING GROSS AREA: (INCLUDING OVERHANGS) 7,302 SQ. FT.

CONDITIONED/OCCUPIED BUILDING AREA: 6,155 SQ. FT.

SEPARATED OR NON-SEPARATED USE:
- NON-SEPARATED

ACCESSORY AREA IS NOT MORE THAN 10% OF THE STORY AREA, THEREFORE AREA IS NOT CONSIDERED SEPARATE OCCUPANCY FROM THE MAIN OCCUPANCY

TRAINING AND SKILL DEVELOPMENT NOT IN A SCHOOL OR ACADEMIC PROGRAM IS CONSIDERED A B-OCCUPANCY

ALLOWABLE BUILDING AREA (PER CBC TABLE 506.2): 36,000 SQ. FT. (B OCCUPANCY)

ALLOWABLE BUILDING HEIGHT LIMITS (PER CBC TABLE 504.3 & 504.4): 3 STORIES / 60 FEET (B OCCUPANCY)

7,302 SQ. FT. ACTUAL < 36,000 SQ. FT. ALLOWABLE AREA THEREFORE NO AREA MODIFICATIONS ARE NEEDED.

AUTOMATIC FIRE SPRINKLER SYSTEM:
- YES, FULL
- WET PIPE SYSTEM PROVIDED FOR BUILDING

SMOKE DETECTION AND FIRE ALARM SYSTEMS:
- YES
- MANUAL PULL STATIONS, HORN/STROBE DEVICES, SPRINKLER WATER FLOW MONITORING

OTHER FIRE PROTECTION SYSTEM:
- NO

SMOKE CONTROL SYSTEM:
- NO

OCCUPANT LOAD FOR ENTIRE BUILDING:
- 147

HIGH FIRE HAZARD SEVERITY ZONE:
- NO

SEISMIC JOINTS:
- NO

EMERGENCY RESPONDER RADIO COVERAGE:
- YES

FIRE RESISTIVE REQUIREMENTS
- FOR TYPE V-B CONSTRUCTION - NONE REQUIRED (CBC TABLE 601)
- FOR EXTERIOR WALLS BASED ON FIRE SEPARATION DISTANCE - NONE REQUIRED BASED ON F.S.D. OF 17'-6" AND V-B CONSTRUCTION AND GROUP B OCCUPANCY

RECREATION BUILDING OCCUPANCY CALCULATIONS

NO.	NAME	AREA	LOAD FACTOR	OCCUPANT LOAD
R101	HALL	634 SF	0 SF	
R102	NIGHT WATCH	142 SF	150 SF	1
R103	LOUNGE	446 SF	15 SF	30
R104	GAMING	311 SF	15 SF	21
R105	HALL	169 SF	0 SF	
R106	VEST.	58 SF	0 SF	
R107	MEN'S RESTROOM	182 SF	0 SF	
R108	VEST.	65 SF	0 SF	
R109	WOMEN'S RESTROOM	177 SF	0 SF	
R110	LAUNDRY	393 SF	50 SF	8
R111	JANITOR	71 SF	300 SF	1
R112	F.S.	34 SF	300 SF	1
R113	R.R.	61 SF		
R114	ELEC.	52 SF	300 SF	1
R115	MUSIC ROOM	219 SF	15 SF	15
R116	READING/QUIET ROOM	358 SF	15 SF	24
R118	CAB STORAGE	119 SF	300 SF	1
R119	TV ROOM	425 SF	15 SF	29
R120	STORAGE	49 SF	300 SF	1
R121	WEIGHT ROOM	698 SF	50 SF	14
R122	ACTIVITY AREA	655 SF	15 SF	44
				191

BUILDING EXITING REVIEW

EXIT WIDTH CALCULATIONS:

EXIT 1:	63 OCC. X 0.2"	=	12.6" REQUIRED
	1 DOOR @ 34"	=	34" PROVIDED SO OK
EXIT 2:	63 OCC. X 0.2"	=	12.6" REQUIRED
	1 DOOR @ 34"	=	34" PROVIDED SO OK
EXIT 3:	44 OCC. X 0.2"	=	8.8" REQUIRED
	1 DOOR @ 34"	=	34" PROVIDED SO OK
EXIT 4:	19 OCC. X 0.2"	=	3.8" REQUIRED
	1 DOOR @ 34"	=	34" PROVIDED SO OK

LEGEND

TRAVEL DISTANCE

NUMBER OF OCCUPANTS — 2

COMBINED NUMBER OF OCCUPANTS IN SPACE — X → EXIT #

ILLUMINATED EXIT SIGN WITH DIRECTIONAL ARROW

SMOKE BARRIER PER CBC 408.6: "SMOKE TIGHT PARTITION PER CBC 408.8"

EXIT COMPONENT → DOOR
OCCUPANT LOAD → 1 OCC
OCCUPANT CALCULATION → 1" REQ.
DOOR WIDTH → 1" PROV.

1 HOUR FIRE PARTITION

1 HOUR EXIT CORRIDOR

'FE' DENOTES WALL MOUNTED FIRE EXTINGUISHER
'FEC' DENOTES RECESSED FIRE EXTINGUISHER CABINET

USE MIN. 4A-20B:C FIRE EXTINGUISHER IN ELECTRICAL AND DATA ROOMS.

RECREATION BUILDING CODE ANALYSIS

OCCUPANCY CLASSIFICATION:
- B (OFFICE, LAUNDRY)
- B (EXERCISE, ACTIVITY, TV, GAMING, MUSIC, QUIET - ASSEMBLY ROOMS W/ LESS THAN 50 OCCUPANTS)

ACCESSORY OCCUPANCY CLASSIFICATION:
- S-2 (STORAGE, JANITOR) 231 SQ. FT. / 5,834 = .04 = 4%

CONSTRUCTION TYPE:
- V-B (FULLY SPRINKLERED)

NUMBER OF STORIES:
- ONE STORY

ACTUAL BUILDING HEIGHT
- 26'-6" (TOP OF MAIN ROOF)

BUILDING GROSS AREA: (INCLUDING OVERHANGS) 6,936 SQ. FT.

CONDITIONED/OCCUPIED BUILDING AREA: 5,834 SQ. FT.

SEPARATED OR NON-SEPARATED USE:
- NON-SEPARATED

S-2 ACCESSORY AREA IS NOT MORE THAN 10% OF THE STORY AREA, THEREFORE AREA IS NOT CONSIDERED SEPARATE OCCUPANCY FROM THE MAIN OCCUPANCY

A-3 ASSEMBLY ROOMS HAVE OCCUPANT LOADS OF LESS THAN 50 AND THEREFORE ARE TO BE CLASSIFIED AS B OCCUPANCY

ALLOWABLE BUILDING AREA (PER CBC TABLE 506.2): 36,000 SQ. FT. (B OCCUPANCY)

ALLOWABLE BUILDING HEIGHT LIMITS (PER CBC TABLE 504.3 & 504.4): 3 STORIES / 60 FEET (B OCCUPANCY)

6,936 SQ. FT. ACTUAL < 36,000 SQ. FT. ALLOWABLE AREA THEREFORE NO AREA MODIFICATIONS ARE NEEDED.

AUTOMATIC FIRE SPRINKLER SYSTEM:
- YES, FULL
- WET PIPE SYSTEM PROVIDED FOR BUILDING

SMOKE DETECTION AND FIRE ALARM SYSTEMS:
- YES
- MANUAL PULL STATIONS, HORN/STROBE DEVICES, SPRINKLER WATER FLOW MONITORING

OTHER FIRE PROTECTION SYSTEM:
- NO

SMOKE CONTROL SYSTEM:
- NO

OCCUPANT LOAD FOR ENTIRE BUILDING:
- 191

HIGH FIRE HAZARD SEVERITY ZONE:
- NO

SEISMIC JOINTS:
- NO

EMERGENCY RESPONDER RADIO COVERAGE:
- YES

FIRE RESISTIVE REQUIREMENTS
- FOR TYPE V-B CONSTRUCTION - NONE REQUIRED (CBC TABLE 601)
- FOR EXTERIOR WALLS BASED ON FIRE SEPARATION DISTANCE - NONE REQUIRED BASED ON F.S.D. OF 17'-6" AND V-B CONSTRUCTION AND GROUP B OCCUPANCY
- PER TABLE 803.13, NOTE A, CLASS C INTERIOR FINISH MATERIALS SHALL BE PERMITTED FOR WAINSCOTTING OR PANELING OF NOT MORE THAN 1,000 SQ. FT. OF APPLIED SURFACE AREA WHERE APPLIED DIRECTLY TO A NONCOMBUSTIBLE BASE AND FIREBLOCKED AS REQUIRED BY SECTION 803.15.1

IDENTIFICATION STAMP
DIV. OF THE STATE ARCHITECT
APP: 02-118630 INC:
REVIEWED FOR
SS ☐ FLS ☐ ACS ☑
DATE: 04/13/2021

OFFICE OF THE STATE FIRE MARSHAL
APPROVED FIRE AND PANIC ONLY
Approval of this plan does not authorize or approve any omission or deviation from applicable regulations. Final approval is subject to field inspection. One set of approved plans shall be available on the project site at all times.
PERMIT NO.: 20-N-2332-CP
REVIEWED BY: LITO CATAYLO, OSFM
DATE: 4/1/2021

GENERAL SERVICES
Department of General Services
State of California
Real Estate Services Division
Project Management & Development Branch
707 Third Street, Suite 4-105
West Sacramento, California 95605

NICHOLS MELBURG & ROSSETTO
ARCHITECTS + ENGINEERS
300 Knollcrest Drive
Redding, CA. 96002
(530) 222-3300 (530) 222-3538 FAX
http://www.nmrdesign.com

Copyright © 2020
All ideas, designs, arrangements and plans indicated or represented by this drawing are owned by, and the property of, NICHOLS, MELBURG and ROSSETTO and were created, evolved and developed for use on, and in conjunction with, the specified project. None of such ideas, designs, arrangements or plans shall be used by, or disclosed to any person, firm or corporation for any purpose whatsoever without the written permission of NICHOLS, MELBURG and ROSSETTO.

LICENSE STAMPS

LICENSED ARCHITECT
KYLE MATTI
C-27504
REN. 10/31/21
STATE OF CALIFORNIA

CONSULTANT

DRAWING STATUS
CONSTRUCTION DOCUMENTS

ISSUE

No.	Date	Description
1	10/20/2020	INITIAL PLAN REVIEW
2	01/22/2021	AGENCY RESUBMITTAL
3	03/22/2021	AGENCY RESUBMITTAL

If drawing is not 30" x 42" it is a reduced print

PROJECT
RESIDENTIAL CENTER, UKIAH: REPLACEMENT OF EXISTING RESIDENTIAL CENTER
440 EAST HILL ROAD
WILLITS, CALIFORNIA 95490
MENDOCINO COUNTY
CALIFORNIA CONSERVATION CORP

Supervisor	Designed	Drawn
KJM	DMH	NMR

DSA Application No.
02-118630

SHEET TITLE
LIFE SAFETY PLAN - EDUCATION & RECREATION BUILDINGS

DGS Project Number 000000000001826
NMR Project Number 18-6456

Reference North

Sheet Scale 1/8" = 1'-0"

Sheet Number G112

ISSUE DATE
July 9, 2021

Plot Date: 3/18/2021 3:26:30 PM
File Name: BIM 360://CCC Willits Residential Center/A_CCC-WRC-COMMON.rvt

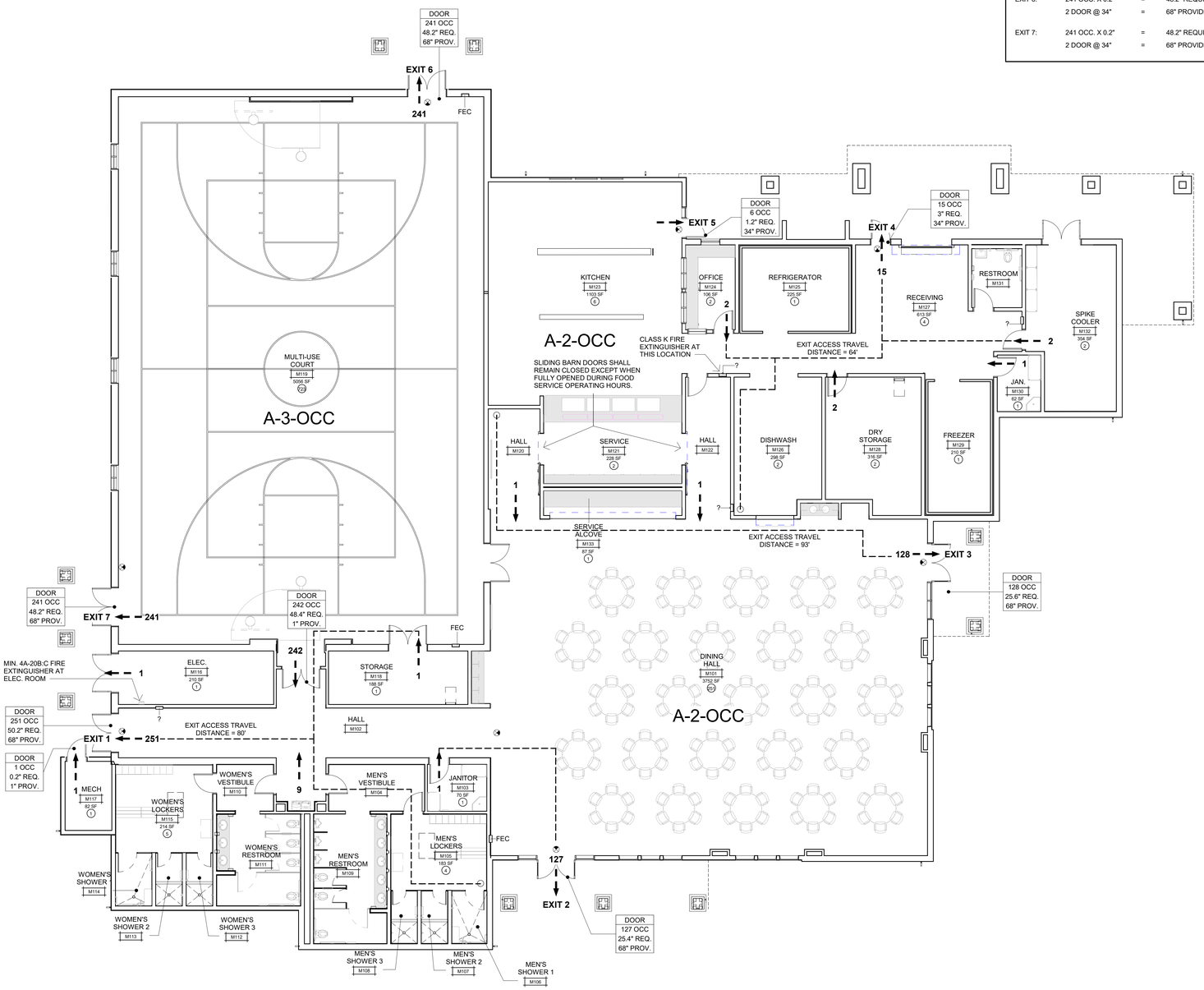

1 MULTI-PURPOSE BLDG LIFE SAFETY PLAN

SCALE: 1/8" = 1'-0"

BUILDING EXITING REVIEW

EXIT WIDTH CALCULATIONS:

EXIT 1:	251 OCC. X 0.2"	=	50.2" REQUIRED
	2 DOOR @ 34"	=	68" PROVIDED SO OK
EXIT 2:	127 OCC. X 0.2"	=	25.4" REQUIRED
	2 DOOR @ 34"	=	68" PROVIDED SO OK
EXIT 3:	128 OCC. X 0.2"	=	25.6" REQUIRED
	2 DOOR @ 34"	=	68" PROVIDED SO OK
EXIT 4:	15 OCC. X 0.2"	=	4.2" REQUIRED
	1 DOOR @ 34"	=	34" PROVIDED SO OK
EXIT 5:	6 OCC. X 0.2"	=	1.2" REQUIRED
	1 DOOR @ 34"	=	34" PROVIDED SO OK
EXIT 6:	241 OCC. X 0.2"	=	48.2" REQUIRED
	2 DOOR @ 34"	=	68" PROVIDED SO OK
EXIT 7:	241 OCC. X 0.2"	=	48.2" REQUIRED
	2 DOOR @ 34"	=	68" PROVIDED SO OK

MULTI-PURPOSE BLDG CODE ANALYSIS

OCCUPANCY CLASSIFICATION:
- A-2 (DINING, COMMERCIAL KITCHEN WITH CAFETERIA-STYLE DINING GREATER THAN 2,500 SQ. FT.)
- A-3 (MULTI-USE COURT)

ACCESSORY OCCUPANCY CLASSIFICATION:
- S-2 (STORAGE, JANITOR) 636 SQ. FT. / 16,244 = .04 = 4%

CONSTRUCTION TYPE:
- V-B (FULLY SPRINKLERED)

NUMBER OF STORIES:
- ONE STORY

ACTUAL BUILDING HEIGHT
- 41'-2" (TOP OF MAIN ROOF)

BUILDING GROSS AREA: 18,857 SQ. FT.
(INCLUDING OVERHANGS)

CONDITIONED/OCCUPIED BUILDING AREA: 16,244 SQ. FT.

SEPARATED OR NON-SEPARATED USE:
- NON-SEPARATED
- NO SEPARATION REQUIRED PER CBC TABLE 508.4

  ACCESSORY AREA IS NOT MORE THAN 10% OF THE STORY AREA, THEREFORE AREA IS NOT CONSIDERED SEPARATE OCCUPANCY FROM THE MAIN OCCUPANCY

ALLOWABLE BUILDING AREA (PER CBC TABLE 506.2): 24,000 SQ. FT. (A-2 & A-3 OCCUPANCY)

ALLOWABLE BUILDING HEIGHT LIMITS (PER CBC TABLE 504.3 & 504.4): 2 STORIES / 60 FEET (A-2 & A-3 OCCUPANCY)

18,857 SQ. FT. ACTUAL < 24,000 SQ. FT. ALLOWABLE AREA THEREFORE NO AREA MODIFICATIONS ARE NEEDED.

AUTOMATIC FIRE SPRINKLER SYSTEM:
- YES, FULL
- WET PIPE SYSTEM PROVIDED FOR BUILDING

SMOKE DETECTION AND FIRE ALARM SYSTEMS:
- YES
- MANUAL PULL STATIONS, HORN/STROBE DEVICES, SPRINKLER WATER FLOW MONITORING

OTHER FIRE PROTECTION SYSTEM:
- NO

SMOKE CONTROL SYSTEM:
- NO

OCCUPANT LOAD FOR ENTIRE BUILDING:
- 1,011

HIGH FIRE HAZARD SEVERITY ZONE:
- NO

SEISMIC JOINTS:
- NO

EMERGENCY RESPONDER RADIO COVERAGE:
- YES

FIRE RESISTIVE REQUIREMENTS
- FOR TYPE V-B CONSTRUCTION - NONE REQUIRED (CBC TABLE 601)
- FOR EXTERIOR WALLS BASED ON FIRE SEPARATION DISTANCE - NONE REQUIRED BASED ON F.S.D. OF OVER 30' AND V-B CONSTRUCTION AND GROUP A-2/A-3 OCCUPANCY

ASSISTIVE LISTENING SYSTEM REQUIREMENTS (CBC 11B-216.10 & 11B-219)
- REQUIRED FOR ASSEMBLY AREAS
- MINIMUM NUMBER OF RECEIVERS - EQUAL TO 4% OF TOTAL NUMBER OF SEATS OR MINIMUM OF 2 (CBC 11B-219.3). THEREFORE REQUIRED NUMBER OF RECEIVERS = .04 x 723 SEATS = 29 RECEIVERS. PROVIDE 29.
- MINIMUM OF 2 RECEIVERS SHALL BE HEARING AID COMPATIBLE
- PORTABLE SYSTEMS ALLOWED PER CBC 11B-219.5 (NO FIXED SEATING)
- RECEIVERS TO BE OWNER-FURNISHED

KITCHEN HOOD FIRE SUPPRESSION SYSTEM (DEFERRED APPROVAL)
- SEE FOODSERVICE DRAWINGS FOR SYSTEM SPECIFICATION

MULTI-PURPOSE BLDG OCCUPANCY CALCULATIONS

WT	NAME	AREA	LOAD FACTOR	OCCUPANT LOAD
M101	DINING HALL	3752 SF	15 SF	251
M102	HALL	576 SF	0 SF	
M103	JANITOR	70 SF	300 SF	1
M104	MEN'S VESTIBULE	113 SF		
M105	MEN'S LOCKERS	183 SF	50 SF	4
M106	MEN'S SHOWER 1	47 SF	0 SF	
M107	MEN'S SHOWER 2	35 SF	0 SF	
M108	MEN'S SHOWER 3	35 SF	0 SF	
M109	MEN'S RESTROOM	234 SF	0 SF	
M110	WOMEN'S VESTIBULE	68 SF	0 SF	
M111	WOMEN'S RESTROOM	189 SF	0 SF	
M112	WOMEN'S SHOWER 3	36 SF	0 SF	
M113	WOMEN'S SHOWER 2	36 SF	0 SF	
M114	WOMEN'S SHOWER 1	49 SF	0 SF	
M115	WOMEN'S LOCKERS	214 SF	50 SF	5
M116	ELEC.	210 SF	300 SF	1
M117	MECH	82 SF	300 SF	1
M118	STORAGE	188 SF	300 SF	1
M119	MULTI-USE COURT	5056 SF	7 SF	723
M120	HALL	143 SF		
M121	SERVICE	228 SF	200 SF	2
M122	HALL	161 SF	0 SF	
M123	KITCHEN	1103 SF	200 SF	6
M124	OFFICE	106 SF	100 SF	2
M125	REFRIGERATOR	225 SF	300 SF	1
M126	DISHWASH	298 SF	200 SF	2
M127	RECEIVING	613 SF	200 SF	4
M128	DRY STORAGE	316 SF	300 SF	2
M129	FREEZER	210 SF	300 SF	1
M130	JAN.	62 SF	300 SF	1
M131	RESTROOM	75 SF	0 SF	
M132	SPIKE COOLER	354 SF	300 SF	2
M133	SERVICE ALCOVE	87 SF	200 SF	1
				1011

LEGEND

- TRAVEL DISTANCE
- NUMBER OF OCCUPANTS (2)
- COMBINED NUMBER OF OCCUPANTS IN SPACE (X)
- EXIT # (EXIT)
- ILLUMINATED EXIT SIGN WITH DIRECTIONAL ARROW
- SMOKE BARRIER PER CBC 408.6: "SMOKE TIGHT PARTITION PER CBC 408.8"
- EXIT COMPONENT → DOOR
- OCCUPANT LOAD → 1 OCC
- OCCUPANT CALCULATION → 1" REQ.
- DOOR WIDTH → 1" PROV.
- 1 HOUR FIRE PARTITION
- 1 HOUR EXIT CORRIDOR

'FE' DENOTES WALL MOUNTED FIRE EXTINGUISHER
'FEC' DENOTES RECESSED FIRE EXTINGUISHER CABINET

USE MIN. 4A-20B:C FIRE EXTINGUISHER IN ELECTRICAL AND DATA ROOMS.

IDENTIFICATION STAMP
DIV. OF THE STATE ARCHITECT
APP: 02-118630 INC:
REVIEWED FOR
SS ☐ FLS ☐ ACS ☑
DATE: 04/13/2021

OFFICE OF THE STATE FIRE MARSHAL
APPROVED FIRE AND PANIC ONLY
Approval of this plan does not authorize or approve any omission or deviation from applicable regulations. Final approval is subject to field inspection. One set of approved plans shall be available on the project site at all times.
PERMIT NO: 20-N-2332-CP
REVIEWED BY: LEO CATAYLO, OSFM
DATE: 4 / /2021

DGS GENERAL SERVICES
Department of General Services
State of California
Real Estate Services Division
Project Management & Development Branch
707 Third Street, Suite 4-105
West Sacramento, California 95605

NICHOLS MELBURG & ROSSETTO ARCHITECTS + ENGINEERS
300 Knollcrest Drive
Redding, CA. 96002
(530) 222-3300 (530) 222-3538 FAX
http://www.nmrdesign.com

Copyright © 2020
All ideas, designs, arrangements and plans indicated or represented by this drawing are owned by, and the property of, NICHOLS, MELBURG and ROSSETTO and were created, evolved and developed for use on, and in conjunction with, the specified project. None of such ideas, designs, arrangements or plans shall be used by, or disclosed to any person, firm or corporation for any purpose whatsoever without the written permission of NICHOLS, MELBURG and ROSSETTO

LICENSE STAMPS

LICENSED ARCHITECT KYLE MATTHEW ROSSETTO C-21504 REN. 10/31/21 STATE OF CALIFORNIA

CONSULTANT

DRAWING STATUS
CONSTRUCTION DOCUMENTS

ISSUE

No.	Date	Description
1	10/20/2020	INITIAL PLAN REVIEW
2	01/22/2021	AGENCY RESUBMITTAL
3	03/22/2021	AGENCY RESUBMITTAL

If drawing is not 30" x 42" it is a reduced print

PROJECT
RESIDENTIAL CENTER, UKIAH: REPLACEMENT OF EXISTING RESIDENTIAL CENTER
440 EAST HILL ROAD
WILLITS, CALIFORNIA 95490
MENDOCINO COUNTY
CALIFORNIA CONSERVATION CORP

Supervisor	Designed	Drawn
KJM	DMH	NMR

DSA Application No.
02-118630

SHEET TITLE
LIFE SAFETY PLAN - MULTI-PURPOSE BUILDING

DGS Project Number: 000000000001826
NMR Project Number: 18-6456

Reference North: NORTH
Sheet Scale: 1/8" = 1'-0"
Sheet Number: G113

ISSUE DATE
July 9, 2021

Plot Date: 2/16/2021 3:28:46 PM
File Name: BIM 360://CCC Willits Residential Center/A_CCC-WRC-COMMON.rvt

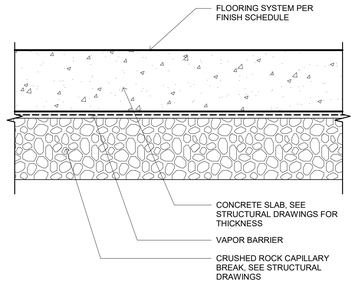

CONCRETE SLAB ON GRADE
NON-RATED

FLOOR - CONCRETE SLAB ON GRADE

G120 F1

SCALE: 3" = 1'-0"

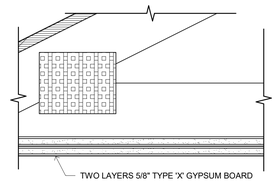

GA-600-2012 FIRE RESISTANCE DESIGN MANUAL 191

ROOF-CEILING SYSTEMS

GA FILE NO. RC 2602	GENERIC	1 HOUR FIRE

WOOD TRUSSES, GYPSUM WALLBOARD

Base layer ⅝" type X gypsum wallboard applied at right angles to wood roof trusses 24" o.c. with 1¼" Type W or S drywall screws 24" o.c. **Face** layer ⅝" type X gypsum wallboard or gypsum veneer base applied at right angles to trusses with 1⅞" Type W or S drywall screws 12" o.c. at joints and intermediate trusses and 1½" Type G drywall screws 12" o.c. placed 2" back on either side of end joints. Joints offset 24" from base layer joints. Wood trusses supporting ½" wood structural panels applied at right angles to trusses with 8d nails. Appropriate roof covering. **Ceiling provides one hour fire resistance protection for trusses.**

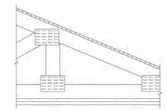

Approx. Ceiling Weight: 5 psf
Fire Test: FM FC 172, 2-25-72; ITS, 8-6-98

GYPSUM BOARD CEILING AT WOOD TRUSSES
1 HOUR FIRE RATED (SEE GA FILE NO. RC 2602)

CEILING - GYPSUM BOARD CEILING AT WOOD TRUSS

G120 C1

SCALE: 3" = 1'-0"

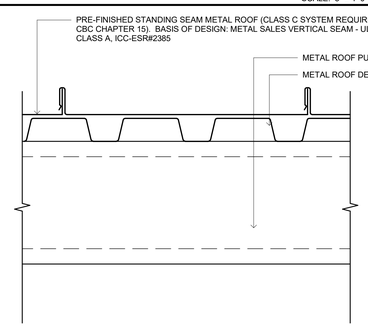

STANDING SEAM METAL ROOFING
NON-RATED

CARPORT & CANOPY ROOFING

G120 R4

SCALE: 3" = 1'-0"

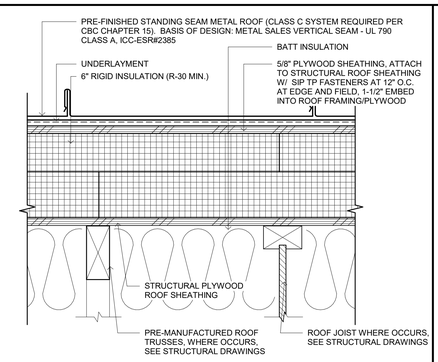

STANDING SEAM METAL ROOFING
NON-RATED

STANDING SEAM METAL ROOFING

G120 R1

SCALE: 3" = 1'-0"

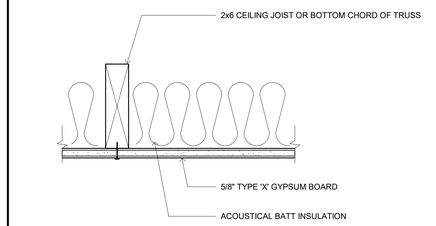

GYPSUM BOARD CEILING
NON- FIRE RATED

GYPSUM BOARD CEILING

G120 C2

SCALE: 3" = 1'-0"

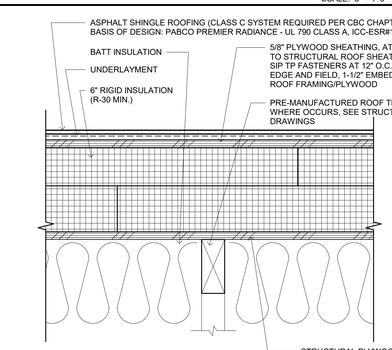

ASPHALT SHINGLE ROOFING
NON-RATED

ASPHALT SHINGLE ROOFING

G120 R2

SCALE: 3" = 1'-0"

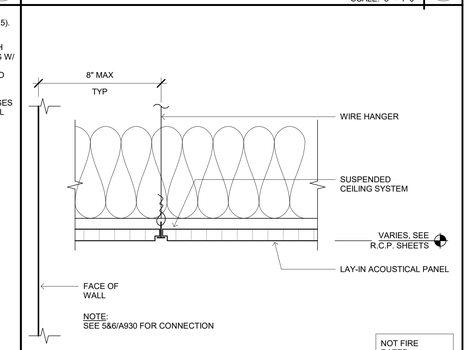

NOT FIRE RATED

SUSPENDED ACOUSTICAL TILES

G120 C3

SCALE: 3" = 1'-0"

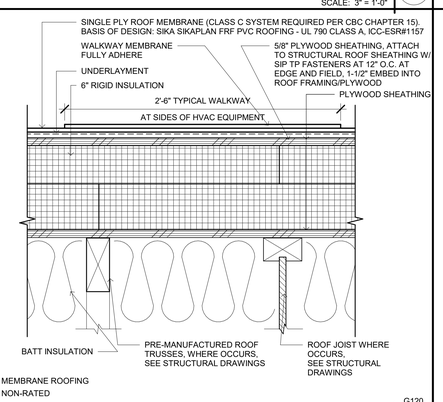

MEMBRANE ROOFING
NON-RATED

SINGLE PLY ROOFING

G120 R3

SCALE: 3" = 1'-0"

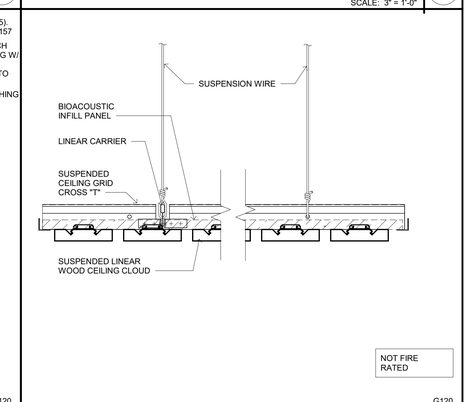

NOT FIRE RATED

WOOD CEILING SYSTEM

G120 C4

SCALE: 3" = 1'-0"

IDENTIFICATION STAMP
DIV. OF THE STATE ARCHITECT
APP: 02-118630 INC:
REVIEWED FOR
SS ☐ FLS ☐ ACS ☑
DATE: 04/13/2021

OFFICE OF THE STATE FIRE MARSHAL
APPROVED FIRE AND PANIC ONLY
Approval of this plan does not authorize or approve any omission or deviation from applicable regulations. Final approval is subject to field inspection. One set of approved plans shall be available on the project site at all times.
PERMIT NO. 20-N-2332-CP
REVIEWED BY: LEO CATAYLO, OSFM
DATE: 4/1/2021

DGS GENERAL SERVICES
Department of General Services
State of California
Real Estate Services Division
Project Management & Development Branch
707 Third Street, Suite 4-105
West Sacramento, California 95605

NICHOLS MELBURG & ROSSETTO
ARCHITECTS + ENGINEERS
300 Knollcrest Drive
Redding, CA. 96002
(530) 222-3300 (530) 222-3538 FAX
http://www.nmrdesign.com

Copyright © 2020
All ideas, designs, arrangements and plans indicated or represented by this drawing are owned by, and the property of, NICHOLS, MELBURG and ROSSETTO and were created, evolved and developed for use on, and in conjunction with, the specified project. None of such ideas, designs, arrangements or plans shall be used by, or disclosed to any person, firm or corporation for any purpose whatsoever without the written permission of NICHOLS, MELBURG and ROSSETTO

LICENSE STAMPS

LICENSED ARCHITECT KYLE MATTHEW ROSSETTO C-21504 REN. 10/31/21 STATE OF CALIFORNIA

CONSULTANT

DRAWING STATUS
CONSTRUCTION DOCUMENTS

ISSUE

No.	Date	Description
1	10/20/2020	INITIAL PLAN REVIEW
2	01/22/2021	AGENCY RESUBMITTAL
3	03/22/2021	AGENCY RESUBMITTAL

If drawing is not 30" x 42" it is a reduced print

PROJECT
RESIDENTIAL CENTER, UKIAH: REPLACEMENT OF EXISTING RESIDENTIAL CENTER
440 EAST HILL ROAD
WILLITS, CALIFORNIA 95490
MENDOCINO COUNTY
CALIFORNIA CONSERVATION CORP

Supervisor	Designed	Drawn
KJM	DMH	NMR

DSA Application No.
02-118630

SHEET TITLE
CEILING, ROOF, & FLOOR ASSEMBLIES

DGS Project Number	NMR Project Number
000000000001826	18-6456

Reference North: NORTH
Sheet Scale: 3" = 1'-0"
Sheet Number: G120

ISSUE DATE
July 9, 2021

Plot Date: 3/24/2021 11:41:24 AM
File Name: 8AM 360 /C2C Willits Residential Center/A_CCC-WRC-COMMON.rvt

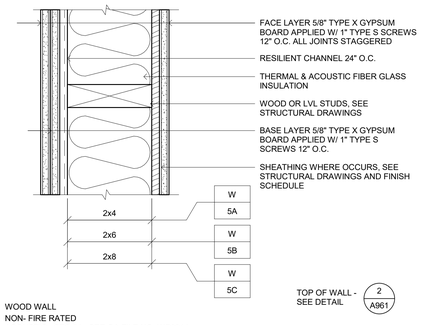

WOOD WALL
NON- FIRE RATED
ACOUSTIC - STC 54 - SEE GA FILE NO. WP3244

INTERIOR - WOOD WALL NON-RATED ACOUSTIC

SCALE: 3" = 1'-0"

G121
W5

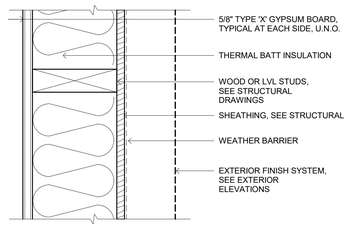

WOOD WALL
NON- FIRE RATED
NON-COMBUSTIBLE PER ASTM E136

EXTERIOR - WOOD WALL NON-RATED

SCALE: 3" = 1'-0"

G121
W1

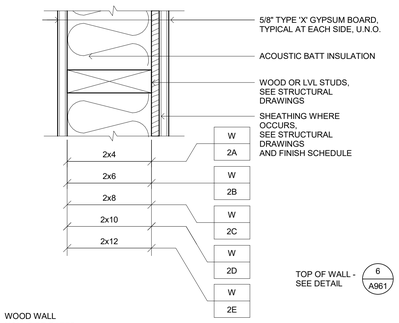

WOOD WALL
NON- FIRE RATED

INTERIOR - WOOD WALL NON-RATED

SCALE: 3" = 1'-0"

G121
W2

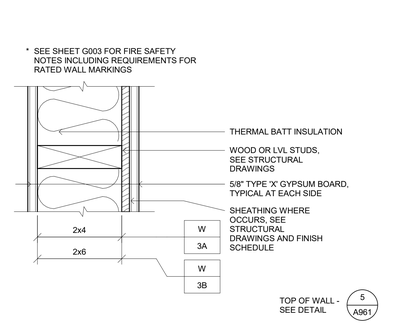

WOOD WALL
1 HOUR FIRE PARTITION (SEE GA FILE NO. WP 3614)

GA-600-2012 FIRE RESISTANCE DESIGN MANUAL

WALLS AND INTERIOR PARTITIONS, WOOD FRAMED

GA FILE NO. WP 3614 | GENERIC

GYPSUM WALLBOARD, WOOD STUDS

One layer 5/8" type X gysum wallboard or gypsum veneer base applied parallel or at right angles to each side of 2x4" wood studs 16" o.c. with 1 1/4" type W drywall screws 12" o.c. Joints staggered 16" on opposite sides. (LOAD-BEARING)

1HR FIRE

Thickness: 4 3/4"
Approx. Weight: 7 psf
Fire Test: SWRI 01-4511-619[1], 3-94
Sound Test: See WP 3520 (G&H NG-246FT, 7-2-65)

30 to 34 STC SOUND

INTERIOR - WOOD WALL 1HR-RATED PARTITION

SCALE: 3" = 1'-0"

G121
W3

GENERAL NOTES

1. STRUCTURAL GRID LINES TO FACE OF STRUCTURE (STUD / MASONRY) OR TO CENTERLINE OF COLUMN (WHERE APPLICABLE) TYPICAL.
2. REFER TO FINISH SCHEDULE (SHEET A900) FOR WALL, FLOOR & CEILING FINISHES AS WELL AS MISCELLANEOUS SPECIALTIES NOT IDENTIFIED OR ILLUSTRATED HEREIN.
3. EXTERIOR WALL CONSTRUCTION IS SHOWN AT WALL SECTIONS & CORRESPONDING DETAILS. PARTITION SYMBOLS ARE USED FOR THE PURPOSE OF SHOWING INTERIOR CONDITIONS, INCLUDING INTERIOR FURRING OF EXTERIOR WALLS.
4. PARTITION TYPES AS DESIGNATED BY PARTITION SYMBOL CONTINUE BETWEEN CORNERS OF ROOM / SPACE OR ANY INTERSECTING PARTITION.
5. FOR PRIORITIZATION OF INTERSECTING PARTITIONS, SEE PARTITION PRIORITY LEGEND ON DETAIL, SEE DETAIL 4 / A961
6. DIFFERING PARTITION TYPES SHALL ALIGN SO THAT PARTITION FINISH PLANES CONTINUE UNBROKEN WITHIN AND/OR ACROSS SPACES.
7. IN CASES WHERE TWO DIFFERENT CEILING HEIGHTS ABUT PARTITIONS, THE PARTITION SHALL EXTEND ABOVE THE HIGHEST CEILING INDICATED.
8. PARTITIONS INDICATED AS FIRE OR SMOKE RATED FORM A SEPARATION THAT SHALL BE CONTINUOUS (FROM FLOOR TO STRUCTURE ABOVE) WITH NO BREAKS AT CONCEALED SPACES, COLUMNS, TRANSITIONS OR OTHER OBSTRUCTIONS.
9. THE PARTITION TYPE ABOVE OR BELOW ANY OPENING IS TO BE THE SAME AS THAT SCHEDULED FOR EITHER SIDE OF THE OPENING, UNLESS NOTED OTHERWISE.
10. PENETRATIONS THROUGH RATED PARTITIONS SHALL BE SEALED WITH UL LISTED FIRE/SMOKE STOP ASSEMBLY.
11. BOX PENETRATIONS AT RATED WALLS SHALL COMPLY WITH DETAIL, SEE DETAIL 7 / A961
12. FIRE WALLS, FIRE BARRIERS, FIRE PARTITIONS, SMOKE BARRIERS AND SMOKE PARTITIONS OR ANY OTHER WALL REQUIRED TO HAVE PROTECTED OPENINGS OR PENETRATIONS SHALL BE EFFECTIVELY AND PERMANENTLY IDENTIFIED WITH SIGNS OR STENCILING:
    - AT ACCESSIBLE CONCEALED FLOOR, FLOOR-CEILING OR ATTIC SPACES.
    - WITHIN 15' OF THE END OF EACH WALL AND AT INTERVALS NOT EXCEEDING 30' MEASURED HORIZONTALLY ALONG THE WALL OR PARTITION. INCLUDE LETTERING NOT LESS THAN 3" IN HEIGHT w/ A MIN. 3/8" STROKE IN A CONTRASTING COLOR, INCORPORATING THE SUGGESTED LANGUAGE "FIRE AND/OR SMOKE BARRIER - PROTECT ALL OPENINGS," OR SIMILAR WORDING PER CBC 703.7.

PARTITION LEGEND

1. REFER TO G120 FOR CEILING, ROOF, FLOOR ASSEMBLIES.
2. REFER TO G121 FOR WALL ASSEMBLY DETAILS.
3. REFER TO G130 FOR THROUGH-PENETRATION DETAILS.
4. REFER TO STRUCTURAL FOR WOOD FRAMED PARTITION WALL NOTES AND DETAILS.

PARTITION SYMBOL

PARTITION HEIGHT FROM FINISHED FLOOR

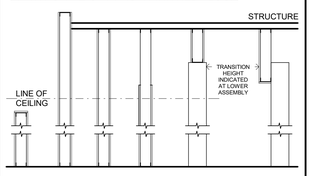

LP = LOW PARTITION BELOW CEILING.

PW = FULL HEIGHT PARAPET WALL. WHERE OCCURS, (AT METAL AND WOOD STUD WALLS) CONTINUOUS SHEATHING ON BOTH SIDES.

FH = FULL HEIGHT PARTITION TO STRUCTURE ABOVE. WHERE OCCURS, (AT METAL AND WOOD STUD WALLS) SHEATHING EXTENDED TO UNDERSIDE OF STRUCTURE ON BOTH SIDES.

PH = PARTIAL HEIGHT PARTITION WITH DIAGONAL BRACING. WHERE OCCURS, (AT METAL STUD WALLS) SHEATHING EXTENDED TO 6" ABOVE CEILING HEIGHT.

TA = FULL HEIGHT PARTITION WITH TRANSITIONED ASSEMBLIES TO UNDERSIDE OF STRUCTURE. TRANSITION HEIGHT IS INDICATED AT LOWER ASSEMBLY. ALL RATINGS AND PROTECTION OF OPENINGS SHALL CONTINUE THE ENTIRE HEIGHT OF PARTITION.

SA = FULL HEIGHT PARTITION WITH STAGGERED ASSEMBLIES TO UNDERSIDE OF STRUCTURE. TRANSITION HEIGHT IS INDICATED AT LOWER ASSEMBLY. ALL RATINGS AND PROTECTION OF OPENINGS SHALL CONTINUE THE ENTIRE HEIGHT OF PARTITION.

SPECIAL CONDITIONS

1 = ACOUSTICAL ATTENUATION BATT INSULATION - 6" MIN. ABOVE CLG. HEIGHT / R-11

2 = ACOUSTICAL ATTENUATION BATT INSULATION - FULL STUD HEIGHT / R-11

3 = FIBERGLASS BATT INSULATION - 6" MINIMUM ABOVE CEILING HEIGHT (SEE SPECIFICATIONS FOR R-VALUES)

4 = FIBERGLASS BATT INSULATION - FULL STUD HEIGHT (SEE SPECIFICATIONS FOR R-VALUES)

5 = PROVIDE ACOUSTICAL SEALANT AT EACH SIDE OF BASE WALL (BETWEEN EDGE OF GYPSUM BOARD AND FLOOR SLAB)

6 = ADHERED MASONRY VENEER WAINSCOT ON EXTERIOR FACE OF WALL

7 = WALL FRAMED TO BOTTOM OF WOOD TRUSSES

8 = WALL FRAMED TO BOTTOM OF ROOF DECK

IDENTIFICATION STAMP
DIV. OF THE STATE ARCHITECT
APP: 02-118630 INC:
REVIEWED FOR
SS ☐ FLS ☐ ACS ☑
DATE: 04/13/2021

OFFICE OF THE STATE FIRE MARSHAL
APPROVED FIRE AND PANIC ONLY
Approval of this plan does not authorize or approve any omission or deviation from applicable regulations. Final approval is subject to field inspection. One set of approved plans shall be available on the project site at all times.
PERMIT NO. 20-N-2332-CP
REVIEWED BY: LEO CATAYLO, OSFM
DATE: 4 / /2021

DGS GENERAL SERVICES
Department of General Services
State of California
Real Estate Services Division
Project Management & Development Branch
707 Third Street, Suite 4-105
West Sacramento, California 95605

NICHOLS MELBURG & ROSSETTO ARCHITECTS + ENGINEERS
300 Knollcrest Drive
Redding, CA. 96002
(530) 222-3300 (530) 222-3538 FAX
http://www.nmrdesign.com

Copyright © 2020
All ideas, designs, arrangements and plans indicated or represented by this drawing are owned by, and the property of, NICHOLS, MELBURG and ROSSETTO and were created, evolved and developed for use on, and in conjunction with, the specified project. None of such ideas, designs, arrangements or plans shall be used by, or disclosed to any person, firm or corporation for any purpose whatsoever without the written permission of NICHOLS, MELBURG and ROSSETTO

LICENSE STAMPS

LICENSED ARCHITECT KYLE MATTHEW ROSSETTO C-21504 REN. 10/31/21 STATE OF CALIFORNIA

CONSULTANT

DRAWING STATUS
CONSTRUCTION DOCUMENTS

ISSUE

No.	Date	Description
1	10/20/2020	INITIAL PLAN REVIEW
2	01/22/2021	AGENCY RESUBMITTAL
3	03/22/2021	AGENCY RESUBMITTAL

If drawing is not 30" x 42" it is a reduced print

PROJECT
RESIDENTIAL CENTER, UKIAH: REPLACEMENT OF EXISTING RESIDENTIAL CENTER
440 EAST HILL ROAD
WILLITS, CALIFORNIA 95490
MENDOCINO COUNTY
CALIFORNIA CONSERVATION CORP

Supervisor	Designed	Drawn
KJM	DMH	NMR

DSA Application No.
02-118630

SHEET TITLE
WALL ASSEMBLIES

DGS Project Number	NMR Project Number
000000000001826	18-6456

Reference North: NORTH
Sheet Scale: 3" = 1'-0"
Sheet Number: G121

ISSUE DATE
July 9, 2021

Plot Date: 3/19/2021 11:55:39 AM
File Name: 18M 360 / CCC Willits Residential Center/A_CCC-WRC-COMMON.rvt

Classified by Underwriters Laboratories, Inc. to UL 1479 and CAN/ULC-S115

System No. W-L-1054

WL 1054

ANSI/UL1479 (ASTM E814)	CAN/ULC S115
F Ratings —1 and 2 Hr (See Items 1 and 3)	F Ratings — 1 and 2 Hr (See Items 1 and 3)
T Rating — 0 Hr	FT Rating — 0 Hr
L Rating (Without Movement) at Ambient — Less Than 1 CFM/sq ft	FH Ratings —1 and 2 Hr (See Items 1 and 3)
L Rating (Without Movement) at 400°F — Less Than 1 CFM/sq ft	FTH Rating — 0 Hr
M Rating (Movement) — See Table 1	FTH Rating — 0 Hr
	L Rating at Ambient — Less Than 5.1 L/s/m2
	L Rating at 204°C — Less Than 5.1 L/s/m2

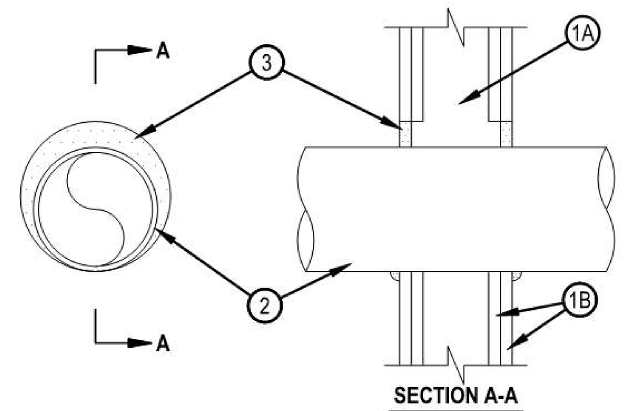

1. Wall Assembly — The 1 or 2 hr fire-rated gypsum wallboard/stud wall assembly shall be constructed of the materials and in the manner specified in the individual U300 or U400 Series Wall and Partition Designs in the UL Fire Resistance Directory and shall include the following construction features:
   A. Studs — Wall framing may consist of either wood studs or steel channel studs. Wood studs to consist of nom 2 by 4 in. (51 by 102 mm) lumber spaced 16 in. (406 mm) OC. Steel studs to be min 2-1/2 in. (64 mm) wide and spaced max 24 in. (610 mm) OC. For M Rating, steel studs to be min 3-5/8 in. (92 mm) wide. When steel studs are used and the diam of opening exceeds the width of stud cavity, the opening shall be framed on all sides using lengths of steel stud installed between the vertical studs and screw-attached to the steel studs at each end. The framed opening in the wall shall be 4 to 6 in. (102 to 152 mm) wider and 4 to 6 in. (102 to 152 mm) higher than the diam of the penetrating item such that, when the penetrating item is installed in the opening, a 2 to 3 in. (51 to 76 mm) clearance is present between the penetrating item and the framing on all four sides.
   B. Gypsum Board* — 5/8 in. (16 mm) thick, 4 ft (122 cm) wide with square or tapered edges. The gypsum board type, thickness, number of layers, fastener type and sheet orientation shall be as specified in the individual U300 or U400 Series Design in the UL Fire Resistance Directory. Max diam of opening is 32-1/4 in. (819 mm) for steel stud walls. Max diam of opening is 14-1/2 in. (368 mm) for wood stud walls.
   The F and FH Ratings of the firestop system are equal to the fire rating of the wall assembly. The M Rating is applicable only to 1 hr rated walls.
2. Through-Penetrants — One metallic pipe, conduit or tubing to be installed either concentrically or eccentrically within the firestop system. The annular space shall be min 0 in. to max 2-1/4 in. (57 mm). Pipe may be installed with continuous point contact. Pipe, conduit or tubing to be rigidly supported on both sides of wall assembly. The following types and sizes of metallic pipes, conduits or tubing may be used:
   A. Steel Pipe — Nom 30 in. (762 mm) diam (or smaller) Schedule 10 (or heavier) steel pipe.
   B. Iron Pipe — Nom 30 in. (762 mm) diam (or smaller) cast or ductile iron pipe.
   C. Conduit — Nom 4 in. (102 mm) diam (or smaller) steel electrical metallic tubing or 6 in. (152 mm) . diam steel conduit.
   D. Copper Tubing — Nom 6 in. (152 mm) diam (or smaller) Type L (or heavier) copper tubing.
   E. Copper Pipe — Nom 6 in. (152 mm) diam (or smaller) regular (or heavier) copper pipe.
3. Fill, Void or Cavity Material* — Sealant — Min 5/8 in. (16 mm) thickness of fill material applied within the annulus, flush with both surfaces of wall. At the point or continuous contact locations between pipe and wall, a min 1/2 in. (13 mm) diam bead of fill material shall be applied at the pipe wall interface on both surfaces of wall.
   HILTI CONSTRUCTION CHEMICALS, DIV OF HILTI INC — FS-ONE MAX Intumescent Sealant

Movement Direction	Penetrant Item	Nominal Penetrant Diameter	Annular Space	Movement	Sealant Depth	F-Rating	L Rating with Movement
Y	2A, 2C*	2 in.	Max 2-1/4 in.	5%	5/8 in.	1 hr	N/A
Z	2A, 2C*	2 in.	2-1/4 in.	0.25 in.	5/8 in.	1 hr	N/A

* Indicates such products shall bear the UL or cUL Certification Mark for jurisdictions employing the UL or cUL Certification (such as Canada), respectively.

Hilti Firestop Systems

Reproduced by HILTI, Inc. Courtesy of Underwriters Laboratories, Inc. January 21, 2020

Classified by Underwriters Laboratories, Inc. to UL 1479 and CAN/ULC-S115

System No. W-L-5029

WL 5029

ANSI/UL1479 (ASTM E814)	CAN/ULC S115
F Ratings — 1, 2 and 3 Hr (See Items 1, 3 and 4)	F Ratings — 1, 2 and 3 Hr (See Items 1, 3 and 4)
T Ratings — 0, 1/2, 1 and 1-1/4 Hr (See Item 3)	FT Ratings — 0, 1/2, 1 and 1-1/4 Hr (See Item 3)
L Rating At Ambient — 4 CFM/Sq Ft	FH Ratings — 1, 2 and 3 Hr (See Items 1, 2 and 4)
L Rating At 400 F — Less Than 1 CFM/Sq Ft	FTH Ratings — 0, 1/2, 1 and 1-1/4 Hr (See Item 3)
	L Rating At Ambient — 4 CFM/Sq Ft
	L Rating At 400 F — Less Than 1 CFM/Sq Ft

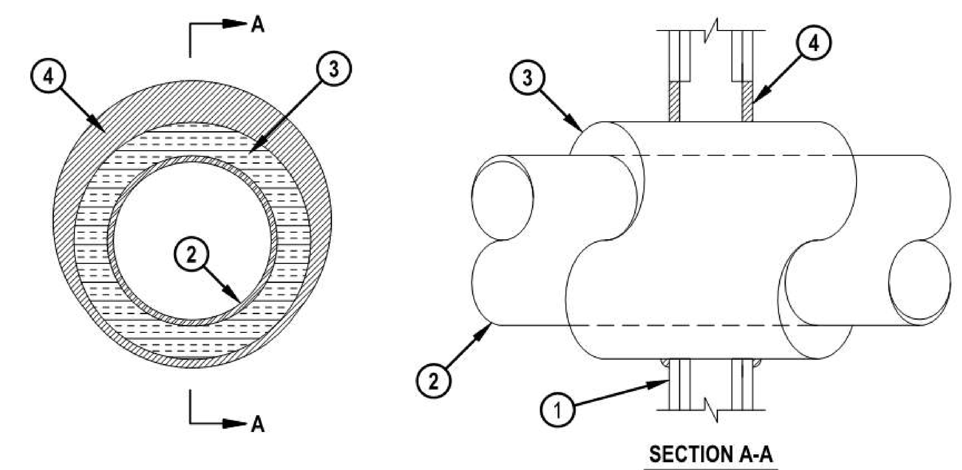

1. Wall Assembly — The 1, 2 or 3 hr fire-rated gypsum board/stud wall assembly shall be constructed of the materials and in the manner specified in the individual U300, U400, V400 or W400 Series Wall and Partition Designs in the UL Fire Resistance Directory and shall include the following construction features:
   A. Studs — Wall framing may consist of either wood studs or steel channel studs. Wood studs to consist of nom 2 by 4 in. (51 by 102 mm) lumber spaced 16 in. (406 mm) OC. Steel studs to be min 2-1/2 in. (64 mm) wide for 1 and 2 hr F and FH rating and 3-1/2 in. (89 mm) wide for 3 hr F and FH rating and spaced max 24 in. (610 mm) OC.
   B. Gypsum Board* — Min 5/8 in. (16 mm) thick with square or tapered edges. The gypsum board type, thickness, number of layers, fastener type and sheet orientation shall be as specified in the individual Wall and Partition Design. Max diam of opening is 18-5/8 in. (473 mm).
   The hourly F and FH Ratings of the firestop system are equal to the hourly fire rating of the wall assembly in which it is installed.
2. Through Penetrants — One metallic pipe or tubing to be installed within the firestop system. Pipe or tubing to be rigidly supported on both sides of wall assembly. The following types and sizes of metallic pipes or tubing may be used:
   A. Steel Pipe — Nom 12 in. (305 mm) diam (or smaller) Schedule 10 (or heavier) steel pipe.
   B. Iron Pipe — Nom 12 in. (305 mm) diam (or smaller) cast or ductile iron pipe.
   C. Copper Tubing — Nom 6 in. (152 mm) diam (or smaller) Type L (or heavier) copper tubing. When the hourly F or FH Rating of the firestop system is 3 hr, the nom diam of copper tube shall not exceed 4 in. (102 mm).
   D. Copper Pipe — Nom 6 in. (152 mm) diam (or smaller) Regular (or heavier) copper pipe. When the hourly F or FH Rating of the firestop system is 3 hr, the nom diam of copper pipe shall not exceed 4 in. (102 mm).
3. Pipe Covering* — Nom 1, 1-1/2 or 2 in. (25, 38 or 51 mm) thick hollow cylindrical heavy density (min 3.5 pcf or 56 kg/m3) glass fiber units jacketed on the outside with an all service jacket. Longitudinal joints sealed with metal fasteners or factory-applied self-sealing lap tape. Transverse joints secured with metal fasteners or with butt tape supplied with the product. For 1 and 2 hr F and FH Ratings, the annular space between insulated penetrant and periphery of opening shall be min 0 in. (point contact) to max 1-7/8 in. (48 mm). For 3 hr F and FH Ratings, the annular space shall be min 0 in. (point contact) to max 1-1/4 in. (32 mm).
   See Pipe and Equipment Covering — Materials (BRGU) category in the Building Material Directory for the names of manufacturers. Any pipe covering material meeting the above specifications and bearing the UL Classification Marking with a Flame Spread Index of 25 or less and a Smoke Developed Index of 50 or less may be used.
   The hourly T, FT, FTH Ratings of the firestop system are 1/2 hr for 1 hr rated walls and 1 hr for 2 hr rated walls. For 3 hr rated walls, the hourly T, FT and FTH Ratings when steel and iron pipes are used are 1 hr. For 3 hr rated walls, the hourly T, FT and FTH Ratings when copper penetrants are used are 1-1/4 hr for 2 in. (51 mm) thick pipe covering and 0 hr for pipe covering thickness less than 2 in. (51 mm).
3A. Pipe Covering* — (Not Shown) — As an alternate to Item 3, max 2 in. (51 mm) thick cylindrical calcium silicate (min 14 pcf) units sized to the outside diam of the pipe or tube may be used. Pipe insulation secured with stainless steel bands or min 18 AWG stainless steel wire spaced max 12 in. (305 mm) OC. When the alternate pipe covering is used, the T and FT Rating shall be as specified in item 3 above.
   See Pipe and Equipment Covering — Materials (BRGU) category in the Building Materials Directory for names of manufacturers. Any pipe covering material meeting the above specifications and bearing the UL Classification Marking with a Flame Spread Index of 25 or less and a Smoke Developed Index of 50 or less may be used.
4. Fill, Void or Cavity Material* — Sealant — For 1 and 2 hr F and FH Rating, min 5/8 in. (16 mm) thickness of fill material applied within the annulus, flush with both surfaces of wall. For 3 hr F and FH Rating, min 1 in. (25 mm) thickness of fill material applied within the annulus, flush with both surfaces of wall. At the point contact location between pipe covering and gypsum board, a min 1/2 in. (13 mm) diam bead of fill material shall be applied at the pipe covering/gypsum board interface on both surfaces of wall.
   HILTI CONSTRUCTION CHEMICALS, DIV OF HILTI INC — FS-One Sealant or FS-ONE MAX Intumescent Sealant

* Indicates such products shall bear the UL or cUL Certification Mark for jurisdictions employing the UL or cUL Certification (such as Canada), respectively.

Hilti Firestop Systems

Reproduced by HILTI, Inc. Courtesy of Underwriters Laboratories, Inc. July 17, 2015

Classified by Underwriters Laboratories, Inc. to UL 1479 and CAN/ULC-S115

System No. W-L-3065

WL 3065

ANSI/UL1479 (ASTM E814)	CAN/ULC S115
F Rating — 1 and 2 Hr (See Item 1)	F Rating — 1 and 2 Hr (See Item 1)
T Rating — 0 and 3/4 Hr (See item 3)	FT Rating — 0 and 3/4 Hr (See item 3)
L Rating At Ambient — 15 CFM/sq ft	FH Rating — 1 and 2 Hr (See Item 1)
L Rating At 400 F — 8 CFM/sq ft	FTH Rating — 0 and 3/4 Hr (See item 3)
	L Rating At Ambient — 15 CFM/sq ft
	L Rating At 400 F — 8 CFM/sq ft

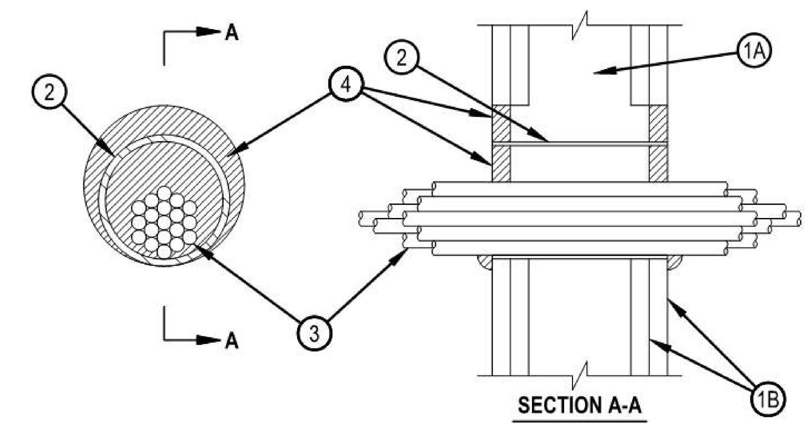

1. Wall Assembly — The 1 or 2 fire-rated gypsum wallboard/stud wall assembly shall be constructed of the materials and in the manner specified in the individual U300, U400, V400 or W400 Series Wall and Partition Designs in the UL Fire Resistance Directory and shall include the following construction features:
   A. Studs — Wall framing may consist of either wood studs or steel channel studs. Wood studs to consist of nom 2 by 4 in. (51 by 102 mm) lumber spaced 16 in. (406 mm) OC. Steel studs to be min 2-1/2 in. (64 mm) wide and spaced max 24 in. (610 mm) OC.
   B. Gypsum Board* — Nom 5/8 in. (16 mm) thick gypsum board, with square or tapered edges. The gypsum board type, thickness, number of layers, fastener type and sheet orientation shall be as specified in the individual Wall and Partition Design in the UL Fire Resistance Directory. Max diam of opening is 5-1/2 in. (138 mm) when sleeve (Item 2) is employed. Max diam of opening is 4 in. (102 mm) when sleeve (Item 2) is not employed.
   The F, FH Ratings of the firestop system are equal to the fire rating of the wall assembly.
2. Metallic Sleeve — (Optional) - Nom 4 in. (102 mm) diam (or smaller) steel electrical metallic tubing (EMT) or Schedule 5 (or heavier) steel pipe or min 0.016 in. thick (0.41 mm, No. 28 ga) galv steel sleeve installed flush with wall surfaces. The annular space between steel sleeve and periphery of opening shall be min 0 in. (0 mm, point contact) to max 1 in. (25mm). When Schedule 5 steel pipe or EMT is used, sleeve may extend up to 18 in. (457 mm) beyond the wall surfaces. As an option when Schedule 5 steel pipe or EMT is used, sleeve may extend continuously beyond one wall surface. When cable bundle penetrates wall assembly at an angle of 45 degrees, no metallic sleeve is used.
3. Cables — Aggregate cross-sectional area of cable in opening to be max 45 percent of the cross-sectional area of the opening. The annular space between the cable bundle and the periphery of the opening to be min 0 in. (point contact) to max 1 in. (25 mm). When sleeve is continuous on one side of wall (see Item 2), the cable fill may be 0 to 45% and the max annular space is not limited. Cables to be rigidly supported on both sides of the wall assembly. Any combination of the following types and sizes of copper conductor cables may be used:
   A. Max 7/C No. 12 AWG with polyvinyl chloride (PVC) insulation and jacket.
   B. Max 25 pair No. 24 AWG telephone cable with PVC insulation and jacket.
   B1. Max 4 pr No. 22 AWG Cat 5 or Cat 6 computer cables.
   C. Type RG/U coaxial cable with polyethylene (PE) insulation and PVC jacket having a max outside diameter of ½ in. (13 mm).
   C1. Max RG 6/U coaxial cable with fluorinated ethylene insulation and jacketing.
   D. Multiple fiber optical communication cable jacketed with PVC and having a max OD of 5/8 in. (16 mm).
   E. Through Penetrating Products*— Max three copper conductor No. 8 AWG .Metal-Clad Cable+.
   AFC CABLE SYSTEMS INC
   F. Max 3/C (with ground)(or smaller) No. 8 AWG copper conductor cable with PVC insulation and jacketing.
   G. Max 3/4 in. (19 mm) diam copper ground cable with or without a PVC jacket.
   H. Fire Resistive Cables* - Max 1-1/4 in. (32 mm) diam single conductor or multi conductor Type MI cable. A min 1/8 in. (3 mm) separation shall be maintained between MI cables and any other types of cable.
   I. Max 4/C with ground 300 kcmil (or smaller) aluminum SER cable with PVC insulation and jacket.
   J. Through Penetrating Product* - Any cables, Metal-Clad Cable+ or Armored Cable+ currently Classified under the Through Penetrating Products category.
   K. Maximum 3/C No. 8 AWG metal-clad cable.
   L. Maximum 5/8 diam fiber-optic cable with PVC jacket.
   For cable bundle penetrating the wall assembly at an angle of 45 degrees, the T, FT, FTH Ratings are 0 hr and 3/4 hr for 1 and 2 hr wall assemblies, respectively.
   See Through Penetrating Product (XHLY) category in the Fire Resistance Directory for names of manufacturers.
4. Fill, Void or Cavity Material*— Sealant or Putty — Fill material applied within the annulus, flush with each end of the steel sleeve or wall surface. Fill material installed symmetrically on both sides of the wall. A min 5/8 in. (16 mm) thickness of sealant is required for the 1 or 2 hr F Rating . An additional 1/2 in. (13 mm) diam bead of fill material shall be applied at the interface of sleeve with gypsum board.
   HILTI CONSTRUCTION CHEMICALS, DIV OF HILTI INC — CP601S, CP606, FS-One Sealants or FS-ONE MAX Intumescent Sealantor or CP618 Putty
5. Packing Material — (Optional, Not Shown) — Mineral wool forming material may be used as a backer for the fill material (Item 4). When used, it shall be firmly packed into annular space within the sleeve as a permanent form and recessed from end of sleeve to accommodate the required thickness of fill material.

* Indicates such products shall bear the UL or cUL Certification Mark for jurisdictions employing the UL or cUL Certification (such as Canada), respectively.

Hilti Firestop Systems

Reproduced by HILTI, Inc. Courtesy of Underwriters Laboratories, Inc. October 14, 2015

Classified by Underwriters Laboratories, Inc. to UL 1479 and CAN/ULC-S115

System No. W-L-8079

WL 8079

ANSI/UL1479 (ASTM E814)	CAN/ULC S115
F Ratings — 1 and 2 Hr (See Item 1)	F Ratings — 1 and 2 Hr (See Item 1)
T Ratings — 0, 1/2, 3/4, 1-1/2 and 2 Hr (See Items 1, 2, 3 and 4)	FT Ratings — 0, 1/2, 3/4, 1-1/2 and 2 Hr (See Items 1, 2, 3 and 4)
	FH Ratings — 1 and 2 Hr (See Item 1)
	FTH Ratings — 0, 1/2, 3/4, 1-1/2 and 2 Hr (See Items 1, 2, 3 and 4)

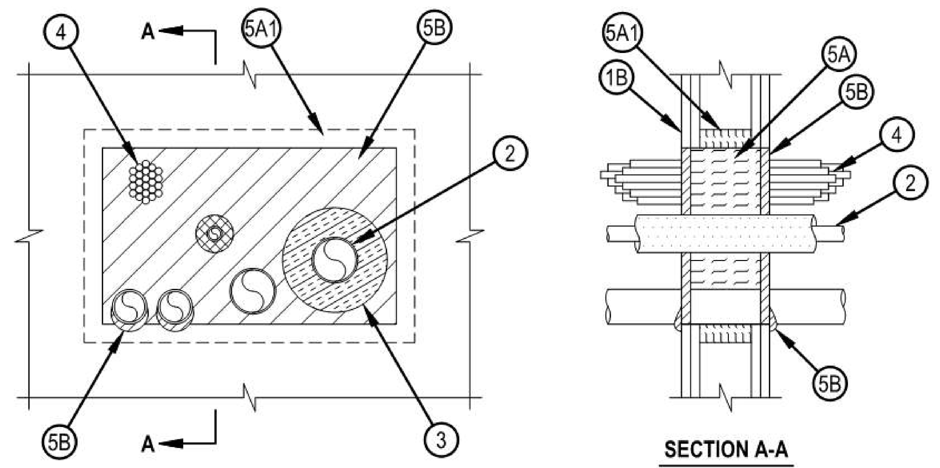

System tested with a pressure differential of 2.5 Pa between the exposed and the unexposed surfaces with the higher pressure on the exposed side.

1. Wall Assembly — The 1 or 2 hr fire rated gypsum board/stud wall assembly shall be constructed of the materials and in the manner specified in the individual U300, U400, V400 or W400 Series Wall and Partition Designs in the UL Fire Resistance Directory and shall include the following construction features:
   A. Studs — Wall framing may consist of either wood studs or channel shaped steel studs. Wood studs to consist of nom 2 by 4 in. (51 by 102 mm) lumber spaced max 16 in. (406 mm) OC. Steel studs to be min 3-1/2 in. (89 mm) wide and spaced max 24 in. (610 mm) OC. When Item 5A1 is not used, additional framing members (not shown) shall be installed to frame the periphery of the wall opening. When the additional framing members are used to frame the opening, the hourly T, FT and FTH Ratings of the firestop system are 0 hr.
   B. Gypsum Board* — 5/8 in. (16 mm) thick with square or tapered edges. The gypsum board type, thickness, number of layers, fastener type and sheet orientation shall be as specified in the individual U300, U400 or V400 Wall and Partition Design. If the through penetrants are installed in a wood stud/gypsum board assembly, the max area of square, rectangular, or circular opening is 210 sq in. (1355 cm²) with max dimension of 14-1/2 in. (368 mm). If the through penetrants are installed in a steel stud/gypsum board assembly, max area of square, rectangular, or circular opening is 240 sq in. (1548 cm²) with max dimension of 20 in. (508 mm) wide.

   The hourly F and FH Ratings of the firestop system are equal to the hourly fire rating of the wall assembly in which it is installed.
2. Through-Penetrant — One or more pipes, conduit or tubes to be installed within the opening. The total number of through-penetrants is dependent on the size of the opening and the types and sizes of the penetrants. Any combination of the penetrants described below may be used provided that the following parameters relative to the annular spaces and the spacing between the through penetrants are maintained. The separation between the penetrants shall be min 1 in. (25 mm) to max 20 in. (508mm). The annular space between penetrants and the periphery of opening shall be min 0 in. (point contact) to max 20 in. (508 mm). Pipes, conduit or tubes to be rigidly supported on both sides of wall assembly. The following types and sizes of pipes, conduit or tubes may be used.
   A. Copper Tubing — Nom 3 in. (76 mm) diam (or smaller) Type L (or heavier) copper tube.
   B. Copper Pipe — Nom 3 in. (76 mm) diam (or smaller) Regular (or heavier) copper pipe.
   C. Steel Pipe — Nom 4 in. (102 mm) diam (or smaller) Schedule 10 (or heavier) steel pipe.
   D. Iron Pipe — Nom 4 in. (102 mm) diam (or smaller) cast or ductile iron pipe.
   E. Conduit — Nom 3 in. (76 mm) diam (or smaller) electric metallic tubing (EMT) or rigid steel conduit.
   F. Polyvinyl Chloride (PVC) Pipe — Nom 2 in. (51 mm) diam (or smaller) Schedule 40 cellular or solid core PVC pipe for use in closed (process or supply) or vented (drain, waste, or vent) piping systems.
   G. Chlorinated Polyvinyl Chloride (CPVC) Pipe — Nom 2 in. (51 mm) diam (or smaller) SDR 13.5 CPVC pipe for use in closed (process or supply) piping systems.

   The T, FT and FTH Ratings are 0 Hr if bare pipe and tubing is used.

3. Pipe Insulation — One or more metallic penetrants (pipe or tubing) may be insulated with the following types of pipe coverings:
   A. Pipe Covering* — Min 1 in. (25 mm) to max 2 in. (51 mm) thick hollow cylindrical heavy density min 3.5 pcf (56 kg/m³) glass fiber units jacketed on the outside with an all service jacket. Longitudinal joints sealed with metal fasteners or factory-applied self-sealing lap tape. Transverse joints secured with metal fasteners or with butt tape supplied with the product.

   See Pipe and Equipment Covering - Materials (BRGU) category in the Building Materials Directory for names of manufacturers. Any pipe covering material meeting the above specifications and bearing the UL Classification Marking with a Flame Spread Index of 25 or less and a Smoke Developed Index of 50 or less may be used.

   B. Tube Insulation-Plastics+ — Min 1/2 in. (13 mm) to max 3/4 in. (19 mm) thick acrylonitrile butadiene/polyvinyl chloride (AB/PVC) flexible foam furnished in the form of tubing.

   See Plastics+ (QMFZ2) category in the Plastics Recognized Component Directory for names of manufacturers. Any Recognized Component tube insulation material meeting the above specifications and having a UL 94 Flammability Classification of 94-5VA may be used.

   The annular space between the insulated penetrants and the periphery of the opening shall be min 0 in. (0 mm, point contact) The separation between the insulated penetrants and the other penetrants shall be a min 1 in. (25 mm).

   The T, FT and FTH Ratings are 1-1/2 hour if Item 3B is used. The T, FT and FTH Ratings are 2 hr if Item 3A is used.
4. Cables — One max 3 in. (76 mm) diam bundle of cables installed within the opening and rigidly supported on both surfaces of wall. The annular space between the tightly-bundled cables and the periphery of the opening shall be min 0 in. (point contact) to max 20 in. (508 mm). The separation between the cable bundle and the other penetrants shall be min 1 in. (25 mm) to max 20 in. (508 mm). Any combination of the following types and sizes of cables may be used:
   A. Max 25 pair No. 24 AWG telephone cable with polyvinyl chloride (PVC) insulation and jacket.
   B. Max 7/C No. 12 AWG copper conductor power and control cable with PVC or cross-linked polyethylene (XLPE) insulation and PVC jacket.
   C. Multiple fiber optical communication cable jacketed with PVC and having a max outside diam of 1/2 in. (13 mm).
   D. Max 3/C No. 8 AWG with bare aluminum ground, PVC insulated steel Metal-Clad+ Cable currently Classified under the Through Penetrating Product* (XHLY) category.
   E. Max 3/C (with ground) No. 8 AWG (or smaller) nonmetallic sheathed (Romex) cable with PVC insulation and jacket materials.
   F. RG/U coaxial cable with polyethylene (PE) insulation and polyvinyl chloride (PVC) jacket having a max outside diam of 1/2 in. (13 mm).
   G. Max 3/4 in. (19 mm) diam copper ground cable with or without PVC jacket.
   H. Max 1-1/4in. (32 mm) Diam single or multi conductor mineral-insulated copper-clad cable.

   The T, FT and FTH Ratings are 1/4 hr if cables D, G and H are used. The T, FT and FTH Ratings are 3/4 Hr for any other combination.

4A. Through Penetrants — (Not shown) - Max six nom 1 in. (25 mm) diam (or smaller) flexible steel conduits to be installed either concentrically or eccentrically within the firestop system. The annular space between the conduits and the periphery of the opening shall be min 0 in. (point contact) to a max 3 in. (76 mm). Conduits to be rigidly supported on both sides of wall. The T, FT and FTH Ratings are 0 Hr if this penetrant is used.
4B. Through Penetrants — (Not Shown) - Max twelve nom 3/8 in. (10 mm) diam (or smaller) polyvinyl chloride (PVC) pneumatic tubing for use in closed (process or supply) piping systems. Tubing to be installed either concentrically or eccentrically within the firestop system. The annular space between the tubing and the periphery of the opening shall be min 0 in. (point contact) to a max 1 in. (25 mm). Tubing to be rigidly supported on both sides of wall.
5. Firestop System — The firestop system shall consist of the following:
   A. Packing Material — In 2 hr fire rated wall assemblies, min 4-3/4 in. (121 mm) thickness of min 4 pcf (64 kg/m³) mineral wool batt insulation firmly packed into opening as a permanent form. In 1 hr fire rated wall assemblies, min 3-1/2 in. (89 mm) thickness of min 4 pcf (64 kg/m³) mineral wool batt insulation firmly packed into opening as a permanent form. Packing material recessed from both surfaces of the wall to accommodate the required thickness of fill material.
   A1. Packing Material — Min 1-1/4 in. (32 mm) thickness of min 4 pcf (64 kg/m³) mineral wool batt insulation firmly packed as a backer around the perimeter of opening as a permanent form. When additional framing members are used to frame the opening (see Item 1A), this packing material is optional. Packing material can be used in combination with the additional framing members.
   B. Fill, Void or Cavity Material* — Sealant — Min 5/8 in. (16 mm) thickness of fill material applied within annulus, flush with both surfaces of wall. At the point contact location between through penetrants and gypsum board, a min 1/2 in. (13 mm) diam bead of fill material shall be applied at the gypsum board/through penetrant interface on both surfaces of wall.
   HILTI CONSTRUCTION CHEMICALS, DIV OF HILTI INC — FS-ONE Sealant or FS-ONE MAX Intumescent Sealant

* Indicates such products shall bear the UL or cUL Certification Mark for jurisdictions employing the UL or cUL Certification (such as Canada), respectively.

\+ Bearing the UL Listing Mark

\# Bearing the UL Recognized Component Mark

Hilti Firestop Systems

Reproduced by HILTI, Inc. Courtesy of Underwriters Laboratories, Inc. April 26, 2017

Classified by Underwriters Laboratories, Inc. to UL 1479 and CAN/ULC-S115

System No. W-L-1304

WL 1304

ANSI/UL1479 (ASTM E814)	CAN/ULC S115
F Ratings — 1 and 2 Hr (See Item 1)	F Ratings — 1 and 2 Hr (See Item 1)
T Rating — 0 Hr	FT Rating — 0 Hr
L Rating At Ambient - Less Than 1 CFM/sq ft	FH Ratings — 1 and 2 Hr (See Item 1)
L Rating At 400 F - Less Than 1 CFM/sq ft	FTH Ratings — 0 Hr
	L Rating At Ambient - Less Than 1 CFM/sq ft
	L Rating At 400 F - Less Than 1 CFM/sq ft

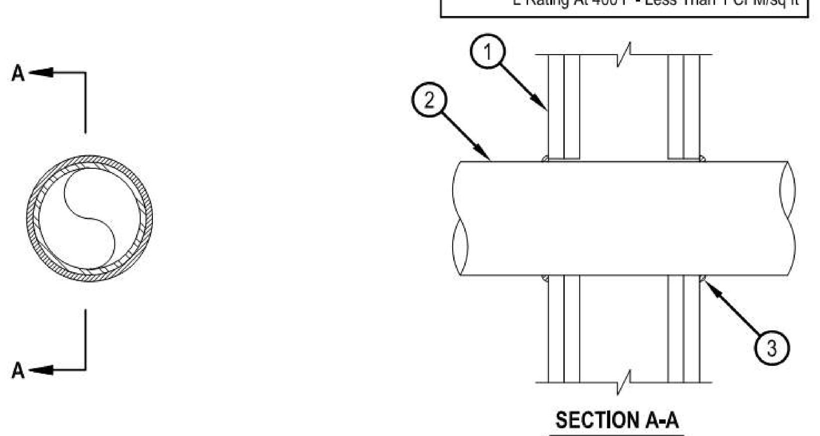

1. Wall Assembly — The 1 or 2 hr fire rated gypsum board/stud wall assembly shall be constructed of the materials and in the manner specified in the individual U300, U400, V400 or W400 Series Wall and Partition Designs in the UL Fire Resistance Directory and shall include the following construction features.
   A. Studs — Wall framing shall consist of either wood studs or steel channel studs. Wood studs to consist of nom 2 by 4 in. (51 by 102 mm) lumber spaced 16 in. (406 mm) OC. Steel studs to be min 2-1/2 in. (64 mm) wide and spaced max 24 in. (610 mm) OC.
   B. Gypsum Board* — Nom 5/8 In. (13 mm) thick, 4 ft (1,219 m) wide with square or tapered edges. The gypsum board type, thickness, number of layers, fastener type and sheet orientation shall be as specified in the Individual Wall and Partition Design. Max diam of opening is 5 in. (127 mm).
   The hourly F, FH Ratings of the firestop system are equal to the hourly fire rating of the wall assembly in which it is installed.
2. Through Penetrant — One metallic pipe, conduit or tubing installed concentrically or eccentrically within the firestop system. Pipe, conduit or tube to be rigidly supported on both sides of wall assembly. The annular space between the pipe or tube and periphery of the opening shall be min 0 In (0 mm, point contact) to max 1/2 In. (13 mm). The following types and sizes of metallic pipes, conduit or tube may be used:
   A. Steel Pipe — Nom 4 in. (102 mm) diam (or smaller) Schedule 40 (or heavier) steel pipe.
   B. Iron Pipe — Nom 4 in. (102 mm) diam (or smaller) cast or ductile iron pipe.
   C. Conduit — Nom 4 In. (102 mm) diam (or smaller) steel electrical metallic tubing (EMT) or steel conduit.
3. Fill, Void or Cavity Material* - Sealant — Min 1/2 In. (13 mm) thickness of fill material (not shown) applied within the annulus, flush with both surfaces of wall. At the point contact location, or when the annulus is 1/8 in. (3 mm) or less, between pipe and wall, a min 1/4 in. (6 mm) diam bead of fill material shall be applied at the pipe/wall interface.
   HILTI CONSTRUCTION CHEMICALS, DIV OF HILTI INC — CP606 Flexible Firestop Sealant, FS-One Intumescent Sealant or FS-ONE MAX Intumescent Sealant.

* Indicates such products shall bear the UL or cUL Certification Mark for jurisdictions employing the UL or cUL Certification (such as Canada), respectively.

Hilti Firestop Systems

Reproduced by HILTI, Inc. Courtesy of Underwriters Laboratories, Inc. January 22, 2015

Classified by Underwriters Laboratories, Inc. to UL 1479 and CAN/ULC-S115

System No. W-L-7155

WL 7155

ANSI/UL1479 (ASTM E814)	CAN/ULC S115
F Ratings — 1 and 2 Hr (See Item 1)	F Ratings — 1 and 2 Hr (See Item 1)
T Ratings — 0 Hr	FT Ratings — 0 Hr
L Rating at Ambient — Less Than 1 CFM/sq ft	FH Ratings — 1 and 2 Hr (See Item 1)
L Rating at 400 F — Less Than 1 CFM/sq ft	FTH Ratings — 0 Hr
	L Rating at Ambient — Less Than 1 CFM/sq ft
	L Rating at 400 F — Less Than 1 CFM/sq ft

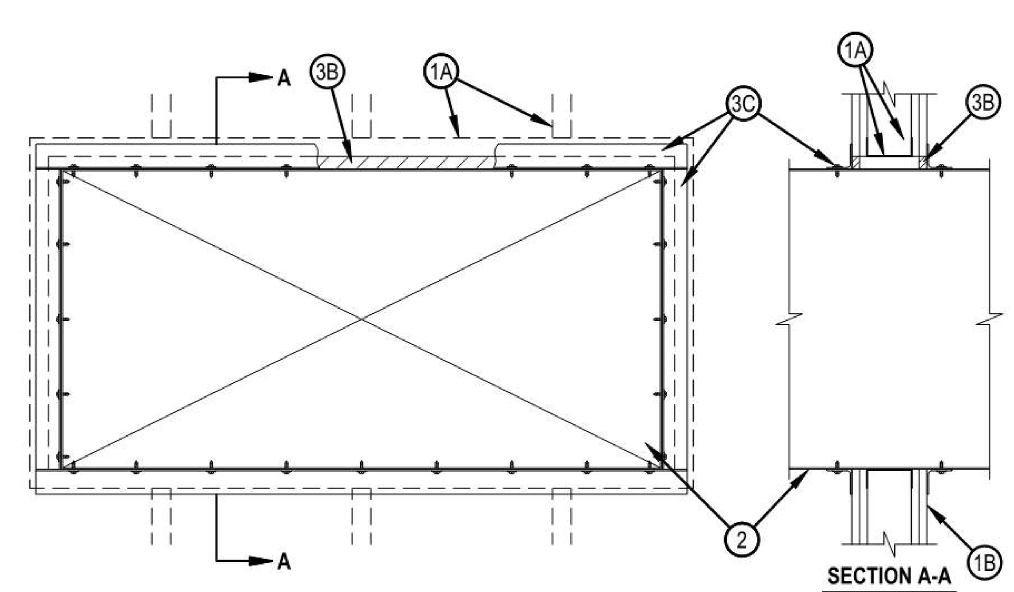

1. Wall Assembly — The 1 or 2 hr fire-rated gypsum wallboard/stud wall assembly shall be constructed of the materials and in the manner described in the individual U400, V400 or W400 Series Wall or Partition Design in the UL Fire Resistance Directory and shall include the following construction features:
   A. Studs — Wall framing shall consist of min 3-1/2 in. (89 mm) wide steel channel studs spaced max 24 in. (610 mm) OC. Additional steel studs shall be used to completely frame the opening.
   B. Gypsum Board* — 5/8 in. (16 mm) thick, 4 ft (1.22 m) wide with square or tapered edges. The gypsum board type, thickness, number of layers, fastener type and sheet orientation shall be as specified in the individual Wall and Partition Design in the UL Fire Resistance Directory. Max area of opening is 73.7 sq ft (6.85 m2) with a max dimension of 104 in. (2.64 m).
   The hourly F and FH Ratings of the firestop system are equal to the hourly fire rating of the wall assembly in which it is installed.
2. Steel Duct — Max 100 in. by 100 in. (2.5 by 2.5 m) galv steel duct to be installed either concentrically or eccentrically within the firestop system. The duct shall be constructed and reinforced in accordance with SMACNA construction standards. The space between the steel duct and periphery of opening shall be min 0 in. (point contact) to max 2 in. (51 mm). Steel duct to be rigidly supported on both sides of the wall assembly.

System No. W-L-7155

WL 7155

2A1. Through-Pentrating Product* — As an alterate to Item 2. Fiber cement with galvanized steel facing, 3/8 in.(10 mm) thick composite metallic duct, with a max cross-sectional area of 43.0 sq ft, (4 m2) and a max individual dimension of 78 3/4 in. (2 m). Duct to be installed either concentrically or eccentrically within the firestop system such that the annular space is min 0 in. (point contact) to max 2 in. (51 mm). Duct to be rigidly supported on both sides of wall assembly. Refer to Ventilation Duct Assemblies in Vol. 2 of the Fire Resistance Directory.
DURASYSTEMS BARRIERS INC — Type DuraDuct HP.
2A2. Through-Pentrating Product* — As an alternate to Item 2. Fiber cement with galvanized steel facing, 1/4 in. (6 mm) thick, with a max cross-sectional area of 1764 sq in. (1.14 m2), and a max individual dimension of 42 in. (1067 mm). Duct to be installed either concentrically or eccentrically within the firestop system such that the annular space is min 0 in. (point contact) to max 2 in. (51 mm). Duct to be rigidly supported on both sides of wall assembly and installed in accordance. Refer to Ventilation Duct Assemblies in Vol. 2 of the Fire Resistance Directory.
DURASYSTEMS BARRIERS INC — Type DuraDuct SD.
2A3. Through-Pentrating Product* — As an alternate to Item 2. Galvanized steel faced duct panel, with a max cross-sectional area of 2450 sq in. (1.58 m2), and a max individual dimension of 49-1/2 in. (1258 mm) Duct to be installed either concentrically or eccentrically within the firestop system such that the annular space is min 0 in. (point contact) to max 2 in. (51 mm). Duct to be rigidly supported on both sides wall assembly. Refer to Ventilation Duct Assemblies in Vol. 2 of the Fire Resistance Directory.
DURASYSTEMS BARRIERS INC — Type DuraDuct GNX.
3 Firestop System — The firestop system shall consist of the following:
   A. Packing Material — (Optional, Not Shown) — Polyethylene backer rod, mineral wool batt insulation or fiberglass batt insulation friction fitted into annular space. Packing material to be recessed from both surfaces of wall to accommodate the required thickness of fill material.
   A1. Packing Material — Required as specified in Table below. Min 3-3/4 in. (95 mm) or 5 in. (127 mm) thickness of min 4 pcf (64 kg/m3) mineral wool batt insulation firmly packed into opening as a permanent form for 1 and 2 hr rated assemblies, respectively. Packing material to be recessed from both surfaces of wall to accommodate the required thickness of fill material.
   B. Fill, Void or Cavity Material* — Sealant — Min 5/8 in. (16 mm) thickness of fill material applied within the annulus, flush with both surfaces of wall. Min 1/4 in. (6 mm) diam bead of fill material shall be applied at the point contact location between the steel duct and the gypsum board.
   HILTI CONSTRUCTION CHEMICALS, DIV OF HILTI INC — CFS-S SIL GG Sealant, FS-ONE Sealant, FS-ONE MAX Intumescent Sealant or CP606 Flexible Firestop Sealant
   C. Steel Retaining Angles — Min No. 16 gauge galv steel angles sized to lap steel duct a min of 2 in. (51 mm) and to lap wall surfaces a min of 1 in. (25 mm). When max duct dimension does not exceed 48 in. (122 cm) and duct area does not exceed 1300 in2 (8387 cm2), angles may be min No. 18 gauge galv steel. Angles attached to steel duct on both sides of wall with min No. 10 by 1/2 in. (13 mm) long steel sheet metal screws located a max of 1 in. (25 mm) from each end of steel duct and spaced a max of 6 in. (152 mm) OC. Steel angles are optional for those sides of duct that do not exceed the dimension specified in Table below, dependent on packing material, sealant and annular space as specified.

Max Duct Dimension	Duct Thickness	Annular Space	Packing Material	Angle (Item 3C) Required
24 in. (610 mm)	24 ga or heavier	1/2 in. min to 1 in. max (13 to 25 mm)	Item 3A1	No

* Indicates such products shall bear the UL or cUL Certification Mark for jurisdictions employing the UL or cUL Certification (such as Canada), respectively.

Hilti Firestop Systems

Reproduced by HILTI, Inc. Courtesy of Underwriters Laboratories, Inc. December 26, 2017

IDENTIFICATION STAMP
DIV. OF THE STATE ARCHITECT
APP: 02-118630 INC:
REVIEWED FOR
SS ☐ FLS ☐ ACS ☑
DATE: 04/13/2021

OFFICE OF THE STATE FIRE MARSHAL
APPROVED FIRE AND PANIC ONLY
Approval of this plan does not authorize or approve any omission or deviation from applicable regulations. Final approval is subject to field inspection. One set of approved plans shall be available on the project site at all times.
PERMIT NO.: 20-N-2332-CP
REVIEWED BY: LITO CATAYLO, OSFM
DATE: 4/1/2021

GENERAL SERVICES
Department of General Services
State of California
Real Estate Services Division
Project Management & Development Branch
707 Third Street, Suite 4-105
West Sacramento, California 95605

NICHOLS MELBURG & ROSSETTO
ARCHITECTS + ENGINEERS
300 Knollcrest Drive
Redding, CA. 96002
(530) 222-3300 (530) 222-3538 FAX
http://www.nmrdesign.com

Copyright © 2020
All ideas, designs, arrangements and plans indicated or represented by this drawing are owned by, and the property of, NICHOLS, MELBURG and ROSSETTO and were created, evolved and developed for use on, and in conjunction with, the specified project. None of such ideas, designs, arrangements or plans shall be used by, or disclosed to any person, firm or corporation for any purpose whatsoever without the written permission of NICHOLS, MELBURG and ROSSETTO.

LICENSE STAMPS

LICENSED ARCHITECT KYLE MATTI C 27504 REN. 10/31/21 STATE OF CALIFORNIA

CONSULTANT

DRAWING STATUS
CONSTRUCTION DOCUMENTS

ISSUE

No.	Date	Description
1	10/20/2020	INITIAL PLAN REVIEW
2	01/22/2021	AGENCY RESUBMITTAL
3	03/22/2021	AGENCY RESUBMITTAL

If drawing is not 30" x 42" it is a reduced print

PROJECT
RESIDENTIAL CENTER, UKIAH: REPLACEMENT OF EXISTING RESIDENTIAL CENTER

440 EAST HILL ROAD
WILLITS, CALIFORNIA 95490
MENDOCINO COUNTY
CALIFORNIA CONSERVATION CORP

Supervisor KJM | Designed DMH | Drawn NMR

DSA Application No. 02-118630

SHEET TITLE
ASSEMBLY PENETRATIONS

DGS Project Number 000000000001826
NMR Project Number 18-6456

Reference North
Sheet Scale
Sheet Number G130

ISSUE DATE
July 9, 2021

Plot Date: 3/18/2021 3:26:53 PM
File Name: BIM 360://CCC Willits Residential Center/A_CCC-WRC-COMMON.rvt

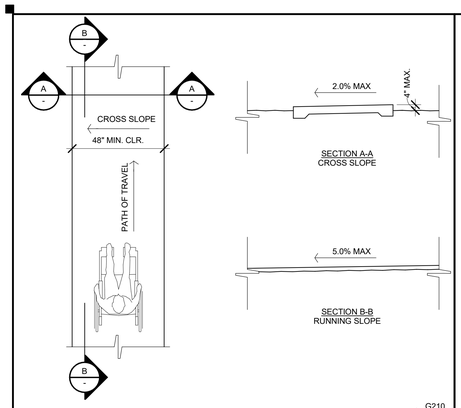

ACCESSIBLE WALKS AND SIDEWALKS ALLOWABLE SLOPES — G210 — 17

SCALE: 3/8" = 1'-0"

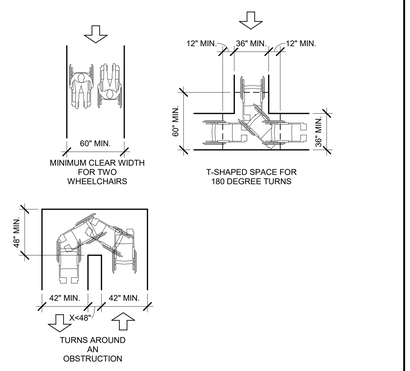

ACCESSIBLE PATH OF TRAVEL — G210 — 13

SCALE: 3/16" = 1'-0"

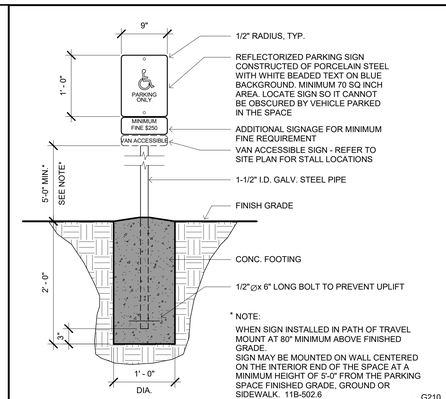

ACCESSIBLE PARKING SIGN — G210 — 5

SCALE: 1" = 1'-0"

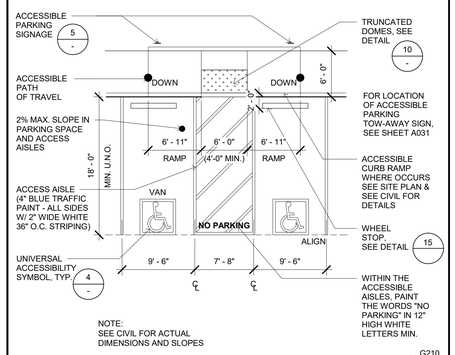

ACCESSIBLE PARKING — G210 — 1

SCALE: 1/8" = 1'-0"

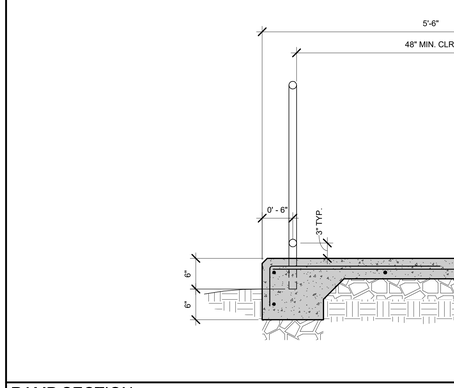

ACCESSIBLE DIRECTIONAL SIGN — G210 — 18

SCALE: 1" = 1'-0"

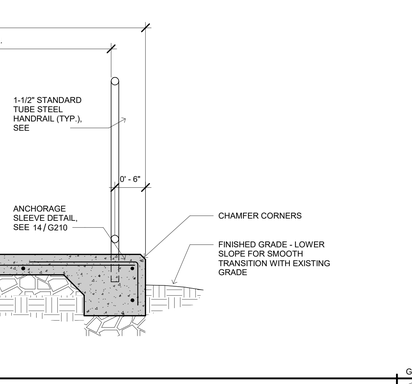

HANDRAIL ANCHORAGE — G210 — 14

SCALE: 6" = 1'-0"

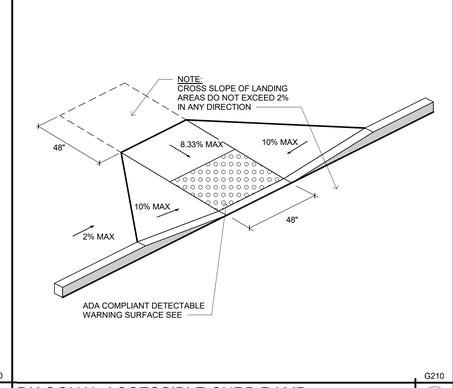

DETECTABLE WARNING SURFACE / TRUNCATED DOMES — G210 — 10

SCALE: 1 1/2" = 1'-0"

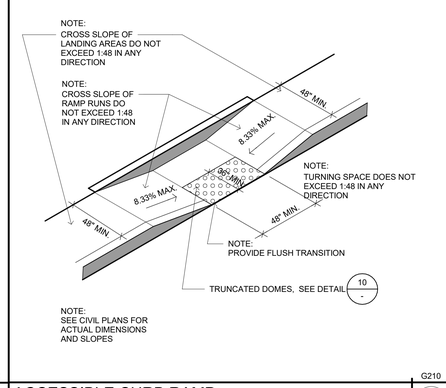

ACCESSIBLE PARKING TOW SIGN — G210 — 6

SCALE: 1" = 1'-0"

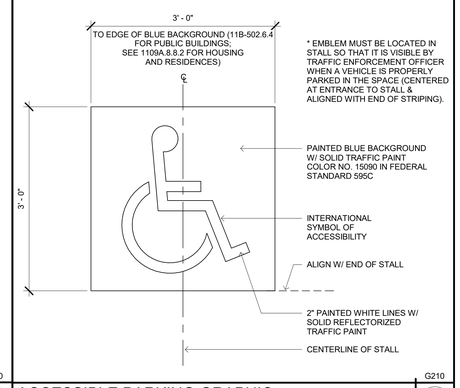

ACCESSIBLE EV PARKING — G210 — 2

SCALE: 1/8" = 1'-0"

TYPICAL RAMP HANDRAIL — G210 — 19

SCALE: 3/4" = 1'-0"

PARKING STALL WHEELSTOP — G210 — 15

SCALE: 1/2" = 1'-0"

ACCESSIBLE ELECTRIC VEHICLE CHARGING PARKING SIGN — G210 — 11

SCALE: 1" = 1'-0"

ACCESSIBLE PATH DIRECTIONAL SIGN — G210 — 7

SCALE: 1" = 1'-0"

CURB CUT - TYPE II CORNER OR STRAIGHT RUN — G210 — 3

SCALE: 1/4" = 1'-0"

RAMP SECTION — G210 — 16

SCALE: 1" = 1'-0"

DIAGONAL ACCESSIBLE CURB RAMP — G210 — 12

SCALE: 3/8" = 1'-0"

ACCESSIBLE CURB RAMP — G210 — 8

SCALE: 1/2" = 1'-0"

ACCESSIBLE PARKING GRAPHIC — G210 — 4

SCALE: 1" = 1'-0"

Plot Date: 4/12/2021 3:11:55 PM
File Name: 8104.300.G210 Wills Residential Center/A_CCC-WRC-COMMON.rvt

IDENTIFICATION STAMP
DIV. OF THE STATE ARCHITECT
APP: 02-118630 INC:
REVIEWED FOR
SS ☐ FLS ☐ ACS ☑
DATE: 04/13/2021

OFFICE OF THE STATE FIRE MARSHAL
APPROVED FIRE AND PANIC ONLY
Approval of this plan does not authorize or approve any omission or deviation from applicable regulations. Final approval is subject to field inspection. One set of approved plans shall be available on the project site at all times.
PERMIT NO. 20-N-2332-CP
REVIEWED BY: LEO CATAYLO, OSFM
DATE: 4 / /2021

DGS GENERAL SERVICES
Department of General Services
State of California
Real Estate Services Division
Project Management & Development Branch
707 Third Street, Suite 4-105
West Sacramento, California 95605

NICHOLS MELBURG & ROSSETTO ARCHITECTS + ENGINEERS
300 Knollcrest Drive
Redding, CA 96002
(530) 222-3300 (530) 222-3538 FAX
http://www.nmrdesign.com

Copyright © 2020
All ideas, designs, arrangements and plans indicated or represented by this drawing are owned by, and the property of, NICHOLS, MELBURG and ROSSETTO and were created, evolved and developed for use on, and in conjunction with, the specified project. None of such ideas, designs, arrangements or plans shall be used by, or disclosed to any person, firm or corporation for any purpose whatsoever without the written permission of NICHOLS, MELBURG and ROSSETTO

LICENSE STAMPS

LICENSED ARCHITECT KYLE MATTHEW ROSSETTO C-21504 REN. 10/31/21 STATE OF CALIFORNIA

CONSULTANT

DRAWING STATUS
CONSTRUCTION DOCUMENTS

ISSUE

No.	Date	Description
1	10/20/2020	INITIAL PLAN REVIEW
2	01/22/2021	AGENCY RESUBMITTAL
3	03/22/2021	AGENCY RESUBMITTAL

If drawing is not 30" x 42" it is a reduced print

PROJECT
RESIDENTIAL CENTER, UKIAH: REPLACEMENT OF EXISTING RESIDENTIAL CENTER
440 EAST HILL ROAD
WILLITS, CALIFORNIA 95490
MENDOCINO COUNTY
CALIFORNIA CONSERVATION CORP

Supervisor	Designed	Drawn
KJM	DMH	DMH

DSA Application No.
02-118630

SHEET TITLE
ACCESSIBILITY DETAILS - SITE AND PARKING

DGS Project Number: 00000000001826
NMR Project Number: 18-6456

Reference North: NORTH
Sheet Scale: As indicated
Sheet Number: G210

ISSUE DATE
July 9, 2021

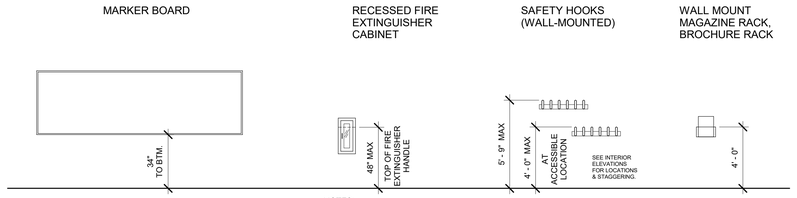

NOTES:

1. IF FIRE EXTINGUISHER WEIGHT IS OVER 40 LBS., 42" MAX. HEIGHT TO HANDLE.
2. 4" MAXIMUM PROJECTION FROM WALL TO HANDLE, SEE DETAIL .

EQUIPMENT MOUNTING HEIGHTS

SCALE: 1/4" = 1'-0"

G212 13

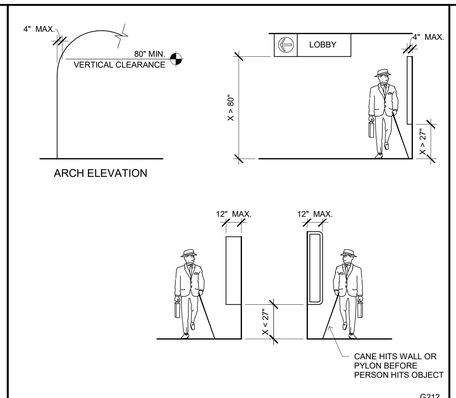

PROTRUDING OBJECTS

SCALE: 1/4" = 1'-0"

G212 9

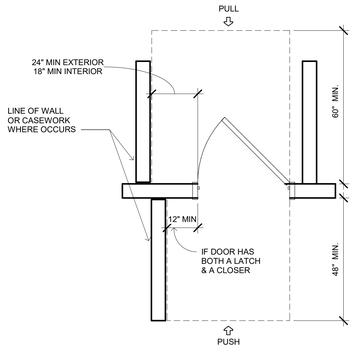

TYPICAL DOOR CLEARANCES

SCALE: 1/2" = 1'-0"

G212 5

ACCESS FOR THE DISABLED

1. THRESHOLD:
   a. WHEN A THRESHOLD OR RECESSED DROP IS USED, IT SHALL BE A MINIMUM OF 1/4 INCH AND A MAXIMUM OF 1/2 INCH IN HEIGHT AND SHALL BE BEVELED WITH A SLOPE NOT STEEPER THAN 1:2.
2. MISCELLANEOUS REQUIREMENTS:
   a. THE CENTER OF THE GRIP OF THE OPERATING HANDLE OF SWITCHES INTENDED TO BE USED BY THE OCCUPANT OF THE ROOM OR AREA TO CONTROL LIGHTING AND RECEPTACLE OUTLETS, APPLIANCES, OR COOLING HEATING AND VENTILATING EQUIPMENT SHALL BE NOT LESS THAN 36" NOR MORE THAN 48" (MAX. TO TOP OF BOX) ABOVE THE FLOOR OR WORK PLATFORM, UNLESS OTHERWISE NOTED.
   b. THE INTERNATIONAL SYMBOL OF ACCESSIBILITY SHALL BE THE STANDARD USED TO IDENTIFY FACILITIES THAT ARE ACCESSIBLE TO AND USABLE BY PHYSICALLY DIASBLED PERSONS. THE SYMBOL SHALL CONSIST OF A WHITE FIGURE ON A BLUE BACKGROUND. THE BLUE SHALL BE APPROXIMATE COLOR FS15090 IN FEDERAL STANDARD 595C.

TOILET ROOM ACCESSORY NOTES

1. GENERAL CONTRACTOR TO PROVIDE STRUCTURAL SUPPORT AND/OR METAL REINFORCEMENT IN STUD WALLS AT ALL CASEWORK, CABINETS, SHELVING, EQUIPMENT ETC. REFER TO 17/A940 FOR TYPICAL BLOCKING.
2. ALL RECESSED SPECIALTIES SHOWN ON ELEVATIONS THAT ARE LOCATED IN FIRE RATED WALLS ARE TO BE S-SIDED WITH 5/8" TYPE 'X' GYPBOARD SIMILAR TO DETAIL 7/A961.
3. GRAB BARS:
   a. GRAB BARS, TUB AND SHOWER SEATS, FASTENERS AND MOUNTING DEVICES SHALL BE DESIGNED FOR VERTICAL OR HORIZONTAL FORCE OF 250 POUNDS APPLIED AT ANY POINT ON THE GRAB BAR, FASTENER, MOUNTING DEVICE, OR SUPPORTING STRUCTURE.
   b. GRAB BARS AND ANY WALL OR OTHER SURFACE ADJACENT TO IT SHALL BE FREE OF ANY SHARP OR ABRASIVE ELEMENTS.
   c. GRAB BARS SHALL NOT ROTATE WITHIN THEIR FITTINGS.
   d. EDGES SHALL HAVE A MINIMUM RADIUS OF 1/8 INCH.ALL DIMENSIONS SHOWN ARE CLEAR DIMENSIONS FROM EDGE OF FIXTURE OR FACE OF FINISH.
4. TOILET ACCESSORIES SHALL NOT PROJECT INTO CLEAR SPACES.

GENERAL ACCESSIBILITY NOTES

SCALE: 12" = 1'-0"

G212 1

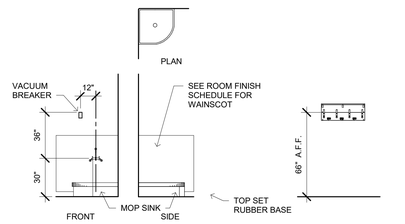

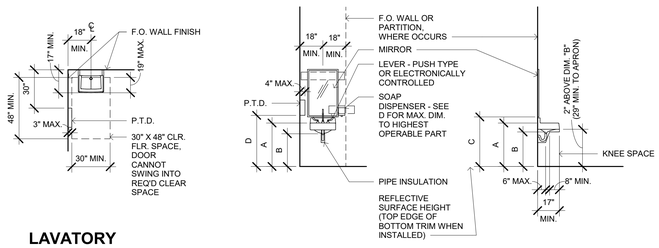

LAVATORY

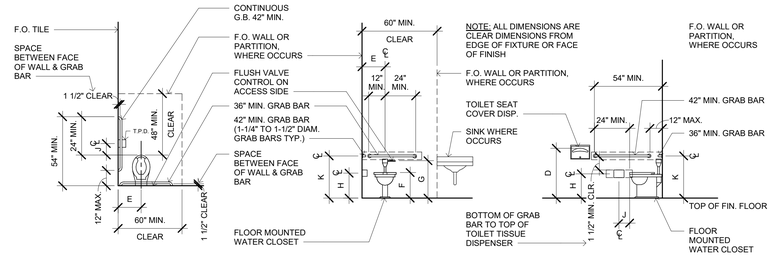

WATER CLOSET

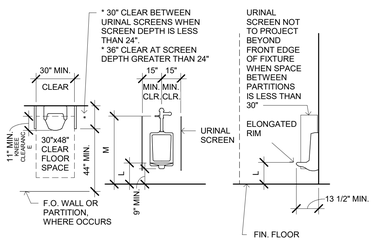

URINAL

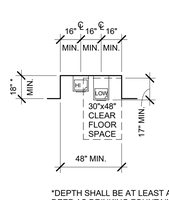

*DEPTH SHALL BE AT LEAST AS DEEP AS DRINKING FOUNTAIN

PLAN - HI-LO FIXTURE

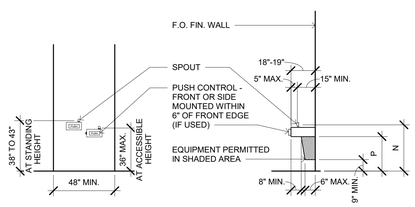

FRONT ELEVATION

SIDE ELEVATION AT ACCESSIBLE HEIGHT

DRINKING FOUNTAIN

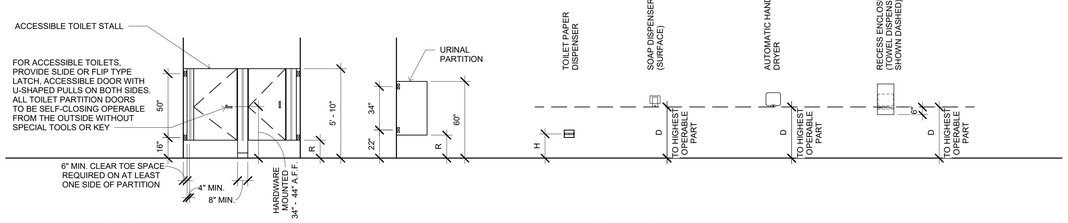

PARTITIONS

ACCESSORIES

DIMENSIONS PER TOILET ROOM TYPE

		ADULT
A.	MAXIMUM LAVATORY HEIGHT (A.F.F.)	34"
B.	MINIMUM LAVATORY KNEE CLEARANCE HEIGHT (A.F.F.)	27"
C.	MAXIMUM HEIGHT TO BTM. OF REFLECTIVE SURFACE (A.F.F. AT LAVATORY)	40"
D.	MAXIMUM HEIGHT OF ACCESSORY OPERABLE PARTS (A.F.F.)	40"
E.	ACCESSIBLE WATER CLOSET CENTERLINE FROM WALL	17"-18"
F.	MAXIMUM WATER CLOSET SEAT HEIGHT (A.F.F.)	17-19"
G.	MAXIMUM WATER CLOSET FLUSH CONTROL HEIGHT (A.F.F.)	36"
H.	MINIMUM CENTERLINE HEIGHT OF TOILET TISSUE DISPENSER (A.F.F.)	19"
J.	MAXIMUM TOILET TISSUE DISPENSER CENTERLINE IN FRONT OF TOILET	7"-9"
K.	GRAB BAR HEIGHT (A.F.F.)	33"
L.	MAXIMUM URINAL LIP HEIGHT (A.F.F.)	17"
M.	MAXIMUM URINAL FLUSH HANDLE HEIGHT (A.F.F.)	44"
N.	MAXIMUM DRINKING FOUNTAIN SPOUT HEIGHT (A.F.F.)	36"
P.	MINIMUM DRINKING FOUNTAIN KNEE CLEARANCE HEIGHT (A.F.F.)	27"
R.	MINIMUM PARTITION TOE CLEARANCE HEIGHT (A.F.F.)	9"

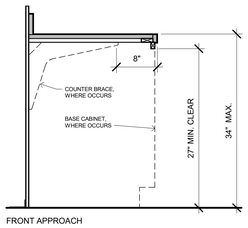

FRONT APPROACH

NOTES:

1. SEE DETAIL SHEET A905 FOR COUNTER BRACE OR BASE CABINET CONSTRUCTION & INFORMATION NOT SHOWN HERE
2. THIS DETAIL CONVEYS THE CODE REQUIREMENTS - SEE INTERIOR ELEVATIONS FOR ACTUAL HEIGHT OF COUNTERTOPS
3. SEE FLOOR PLANS FOR REQUIRED 30" WIDE CLEARANCE LOCATIONS

COUNTERTOP ACCESSIBLE CLEARANCES

SCALE: 1" = 1'-0"

G212 19

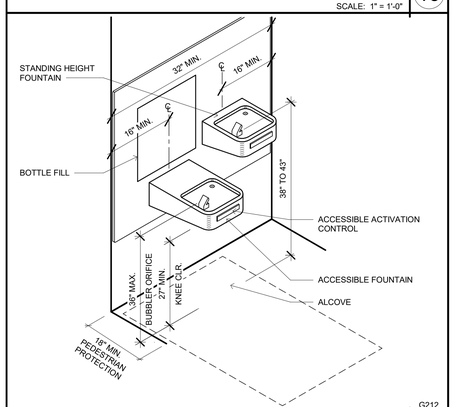

ACCESSIBLE DRINKING FOUNTAIN

SCALE: 3/4" = 1'-0"

G212 20

ENVIRONMENTAL SERVICES MOUNTING HEIGHTS

SCALE: 1/4" = 1'-0"

G212 18

TOILET RM. MOUNTING HEIGHTS & CLEARANCES

SCALE: 1/4" = 1'-0"

G212 4

IDENTIFICATION STAMP
DIV. OF THE STATE ARCHITECT
APP: 02-118630 INC:
REVIEWED FOR
SS ☐ FLS ☐ ACS ☑
DATE: 04/13/2021

OFFICE OF THE STATE FIRE MARSHAL
APPROVED FIRE AND PANIC ONLY
Approval of this plan does not authorize or approve any omission or deviation from applicable regulations. Final approval is subject to field inspection. One set of approved plans shall be available on the project site at all times.
PERMIT NO. 20-N-2332-CP
REVIEWED BY: LEO CATAYLO, OSFM
DATE: 4/ /2021

GENERAL SERVICES
Department of General Services
State of California
Real Estate Services Division
Project Management & Development Branch
707 Third Street, Suite 4-105
West Sacramento, California 95605

NICHOLS MELBURG & ROSSETTO ARCHITECTS + ENGINEERS
300 Knollcrest Drive
Redding, CA. 96002
(530) 222-3300 (530) 222-3538 FAX
http://www.nmrdesign.com

Copyright © 2020
All ideas, designs, arrangements and plans indicated or represented by this drawing are owned by, and the property of, NICHOLS, MELBURG and ROSSETTO and were created, evolved and developed for use on, and in conjunction with, the specified project. None of such ideas, designs, arrangements or plans shall be used by, or disclosed to any person, firm or corporation for any purpose whatsoever without the written permission of NICHOLS, MELBURG and ROSSETTO.

LICENSE STAMPS

CONSULTANT

DRAWING STATUS
CONSTRUCTION DOCUMENTS

ISSUE

No.	Date	Description
1	10/20/2020	INITIAL PLAN REVIEW
2	01/22/2021	AGENCY RESUBMITTAL
3	03/22/2021	AGENCY RESUBMITTAL

If drawing is not 30" x 42" it is a reduced print

PROJECT
RESIDENTIAL CENTER, UKIAH: REPLACEMENT OF EXISTING RESIDENTIAL CENTER
440 EAST HILL ROAD
WILLITS, CALIFORNIA 95490
MENDOCINO COUNTY
CALIFORNIA CONSERVATION CORP

Supervisor	Designed	Drawn
KJM	DMH	NMR

DSA Application No.
02-118630

SHEET TITLE
ACCESSIBILITY DETAILS

DGS Project Number	NMR Project Number
00000000001826	18-6456

Reference North: NORTH
Sheet Scale: As indicated
Sheet Number: G212

ISSUE DATE
July 9, 2021

Plot Date: 3/18/2021 1:27:02 PM
File Name: BIM 360://CCC-Willits Residential Center/A_CCC-WRC-COMMON.rvt

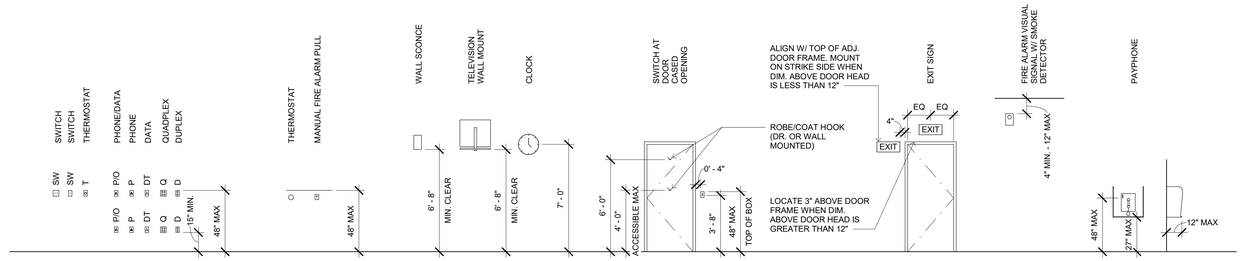

G213

ELECTRICAL DEVICE MOUNTING HEIGHTS

SCALE: 1/4" = 1'-0"

1

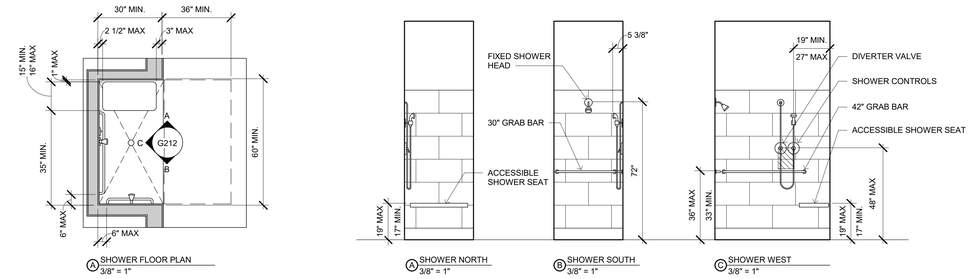

G213

TYPICAL ACCESSIBLE SHOWER STALL

SCALE: 3/8" = 1'-0"

2

Plot Date: 2/16/2021 1:27:04 PM
File Name: BIM 360://CCC\Willits Residential Center\A_CCC-WRC-COMMON.rvt

IDENTIFICATION STAMP
DIV. OF THE STATE ARCHITECT
APP: 02-118630 INC:
REVIEWED FOR
SS ☐ FLS ☐ ACS ☑
DATE: 04/13/2021

OFFICE OF THE STATE FIRE MARSHAL
APPROVED FIRE AND PANIC ONLY
Approval of this plan does not authorize or approve any omission or deviation from applicable regulations. Final approval is subject to field inspection. One set of approved plans shall be available on the project site at all times.
PERMIT NO. 20-N-2332-CP
REVIEWED BY: LEO CATAYLO, OSFM
DATE: 4 / /2021

GENERAL SERVICES
Department of General Services
State of California
Real Estate Services Division
Project Management & Development Branch
707 Third Street, Suite 4-105
West Sacramento, California 95605

NICHOLS MELBURG & ROSSETTO
ARCHITECTS + ENGINEERS
300 Knollcrest Drive
Redding, CA. 96002
(530) 222-3300 (530) 222-3538 FAX
http://www.nmrdesign.com

Copyright © 2020
All ideas, designs, arrangements and plans indicated or represented by this drawing are owned by, and the property of, NICHOLS, MELBURG and ROSSETTO and were created, evolved and developed for use on, and in conjunction with, the specified project. None of such ideas, designs, arrangements or plans shall be used by, or disclosed to any person, firm or corporation for any purpose whatsoever without the written permission of NICHOLS, MELBURG and ROSSETTO

LICENSE STAMPS

LICENSED ARCHITECT KYLE MATTHEW JOHNSON C-31504 REN. 10/31/21 STATE OF CALIFORNIA

CONSULTANT

DRAWING STATUS
CONSTRUCTION DOCUMENTS

ISSUE

No.	Date	Description
1	10/20/2020	INITIAL PLAN REVIEW
2	01/22/2021	AGENCY RESUBMITTAL
3	03/22/2021	AGENCY RESUBMITTAL

If drawing is not 30" x 42" it is a reduced print

PROJECT
RESIDENTIAL CENTER, UKIAH: REPLACEMENT OF EXISTING RESIDENTIAL CENTER
440 EAST HILL ROAD
WILLITS, CALIFORNIA 95490
MENDOCINO COUNTY
CALIFORNIA CONSERVATION CORP

Supervisor	Designed	Drawn
KJM	DMH	NMR

DSA Application No.
02-118630

SHEET TITLE
ACCESSIBILITY DETAILS

DGS Project Number	NMR Project Number
000000000001826	18-6456

Reference North
Sheet Scale: As indicated
Sheet Number: G213

ISSUE DATE
July 9, 2021

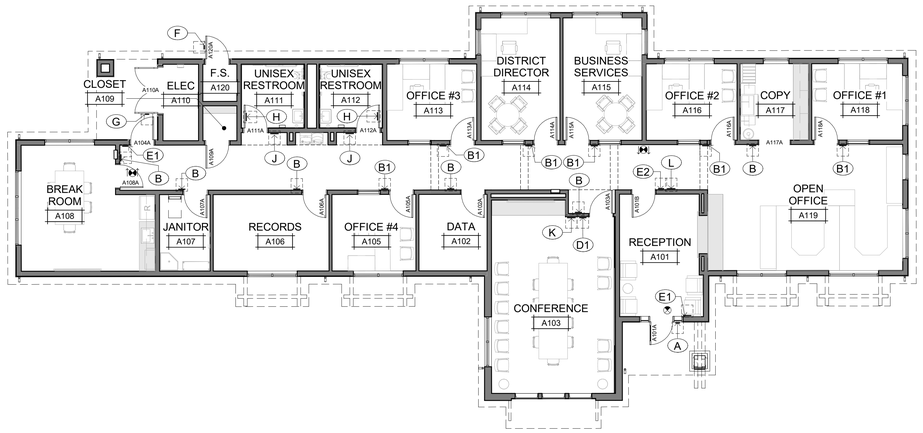

1 ADMINISTRATION BLDG SIGNAGE PLAN

SCALE: 1/8" = 1'-0"

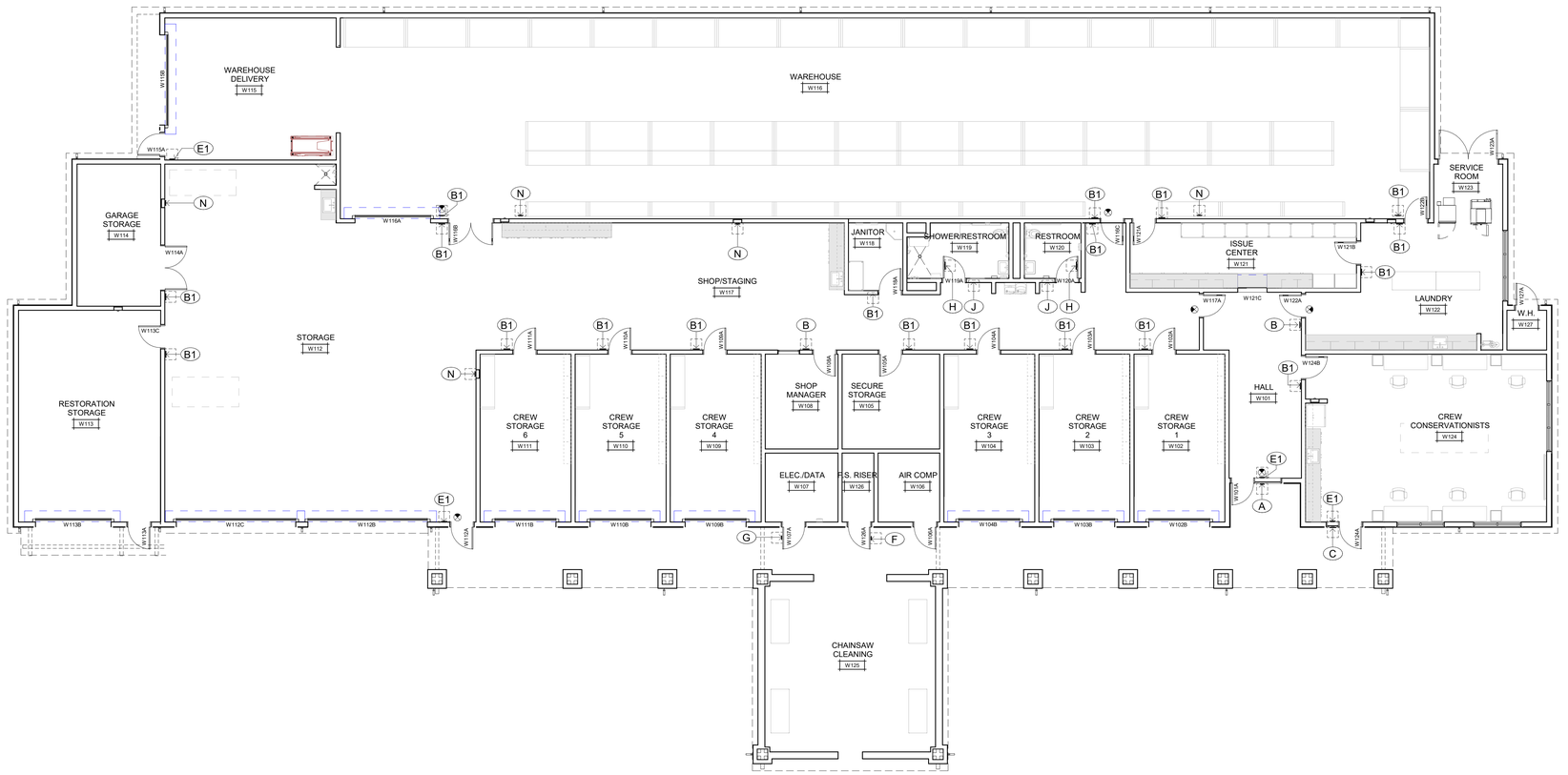

2 WAREHOUSE BUILDING SIGNAGE PLAN

SCALE: 1/8" = 1'-0"

SIGNAGE LEGEND

SEE SPECIFICATIONS AND SHEET A965 FOR ADDITIONAL INFORMATION AND NOTES

A	ACCESSIBLE ENTRANCE IDENTIFICATION SIGN
B	ROOM IDENTIFICATION SIGN
B1	ROOM IDENTIFICATION SIGN, ALTERNATE
C	BLANK SIGNAGE PLATE
D1	MAXIMUM OCCUPANCY SIGN, 10"x6"
D2	MAXIMUM OCCUPANCY SIGN, 20"x10"
E1	EXIT SIGN
E2	EXIT ROUTE SIGN
F	FIRE SPRINKLER RISER ROOM SIGN
G	ELECTRICAL ROOM
H	TOILET ROOM IDENTIFICATION DOOR SIGN
J	ACCESSIBLE TOILET ROOM WALL SIGN
K	ASSISTIVE LISTENING SYSTEM SIGN
L	EMERGENCY EVACUATION SIGN
M	NO SMOKING SIGN
N	FIRE EXTINGUISHER SIGN
O	NFPA 704 PLACARD
P	BUILDING EXTERIOR PARKING AREA AND VEHICULAR TRAFFIC SIGNS
Q	CONCEALED ITEM SIGN
R1	ROOM IDENTIFICATION SIGN WITH INSERT
R2	ROOM IDENTIFICATION SIGN WITH MULTIPLE INSERTS
	ILLUMINATED EXIT SIGN WITH DIRECTIONAL ARROW

IDENTIFICATION STAMP
DIV. OF THE STATE ARCHITECT
APP: 02-118630 INC:
REVIEWED FOR
SS ☐ FLS ☐ ACS ☑
DATE: 04/13/2021

OFFICE OF THE STATE FIRE MARSHAL
APPROVED FIRE AND PANIC ONLY
Approval of this plan does not authorize or approve any omission or deviation from applicable regulations. Final approval is subject to field inspection. One set of approved plans shall be available on the project site at all times.
PERMIT NO. 20-N-2332-CP
REVIEWED BY: LEO CATAYLO, OSFM
DATE: 4/ /2021

GENERAL SERVICES
Department of General Services
State of California
Real Estate Services Division
Project Management & Development Branch
707 Third Street, Suite 4-105
West Sacramento, California 95605

NICHOLS MELBURG & ROSSETTO
ARCHITECTS + ENGINEERS
300 Knollcrest Drive
Redding, CA. 960002
(530) 222-3300 (530) 222-3538 FAX
http://www.nmrdesign.com

Copyright © 2020
All ideas, designs, arrangements and plans indicated or represented by this drawing are owned by, and the property of, NICHOLS, MELBURG and ROSSETTO and were created, evolved and developed for use on, and in conjunction with, the specified project. None of such ideas, designs, arrangements or plans shall be used by, or disclosed to any person, firm or corporation for any purpose whatsoever without the written permission of NICHOLS, MELBURG and ROSSETTO

LICENSE STAMPS

LICENSED ARCHITECT KYLE MATTY C-21504 REN. 10/31/21 STATE OF CALIFORNIA

CONSULTANT

DRAWING STATUS
CONSTRUCTION DOCUMENTS

ISSUE

No.	Date	Description
1	10/20/2020	INITIAL PLAN REVIEW
2	01/22/2021	AGENCY RESUBMITTAL
3	03/22/2021	AGENCY RESUBMITTAL

If drawing is not 30" x 42" it is a reduced print

PROJECT
RESIDENTIAL CENTER, UKIAH: REPLACEMENT OF EXISTING RESIDENTIAL CENTER
440 EAST HILL ROAD
WILLITS, CALIFORNIA 95490
MENDOCINO COUNTY
CALIFORNIA CONSERVATION CORP

Supervisor	Designed	Drawn
KJM	DMH	NMR

DSA Application No.
02-118630

SHEET TITLE
SIGNAGE PLANS - ADMIN & WAREHOUSE BUILDINGS

DGS Project Number: 000000000001826
NMR Project Number: 18-6456

Reference North: NORTH
Sheet Scale: As indicated
Sheet Number: G300

ISSUE DATE
July 9, 2021

Plot Date: 5/18/2021 1:27:16 PM
File Name: 8184.300 | CCC Willits Residential Center\A_CCC-WRC-COMMON.rvt

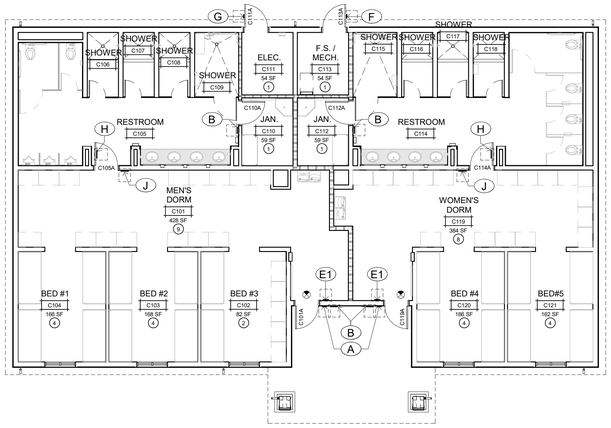

1 COMET SIGNAGE PLAN

SCALE: 1/8" = 1'-0"

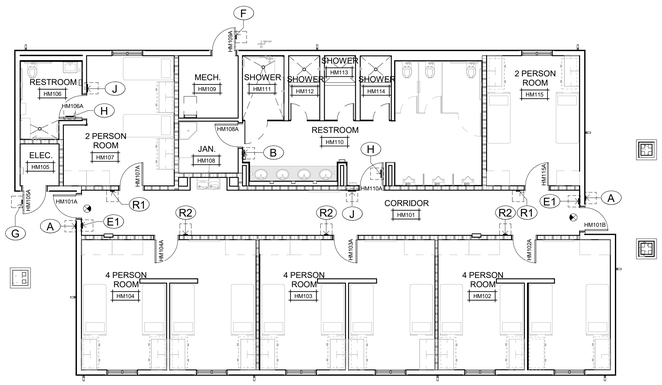

2 MEN HOUSING SIGNAGE PLAN

SCALE: 1/8" = 1'-0"

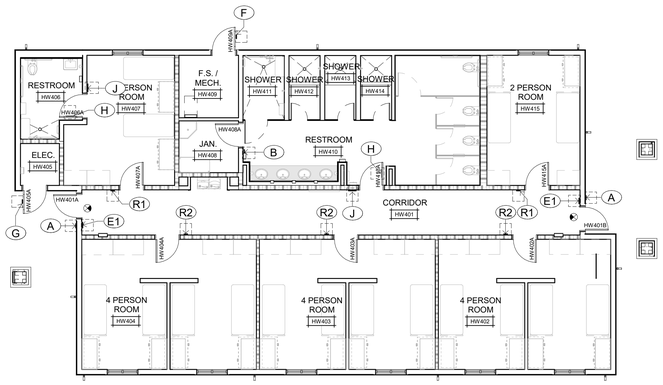

3 WOMEN HOUSING SIGNAGE PLAN

SCALE: 1/8" = 1'-0"

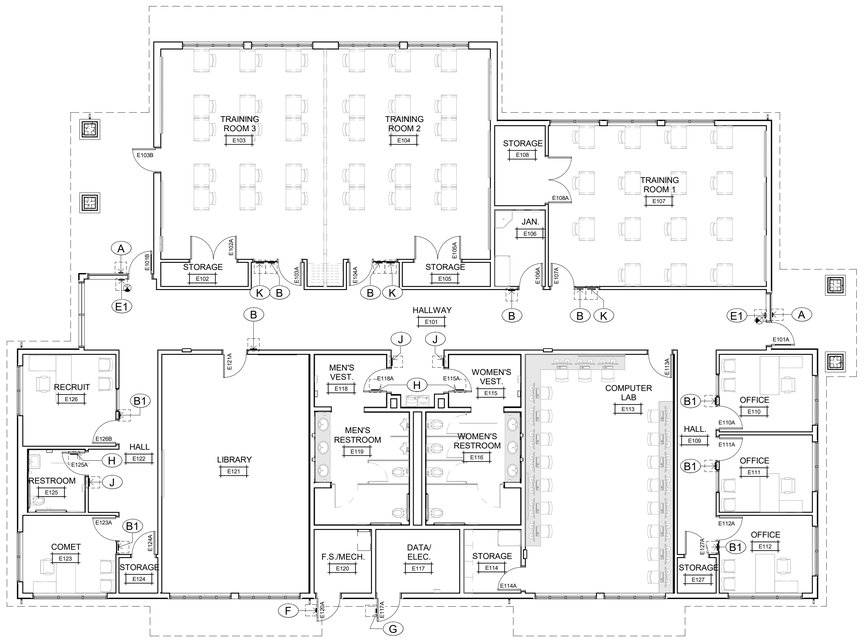

4 EDUCATION BUILDING SIGNAGE PLAN

SCALE: 1/8" = 1'-0"

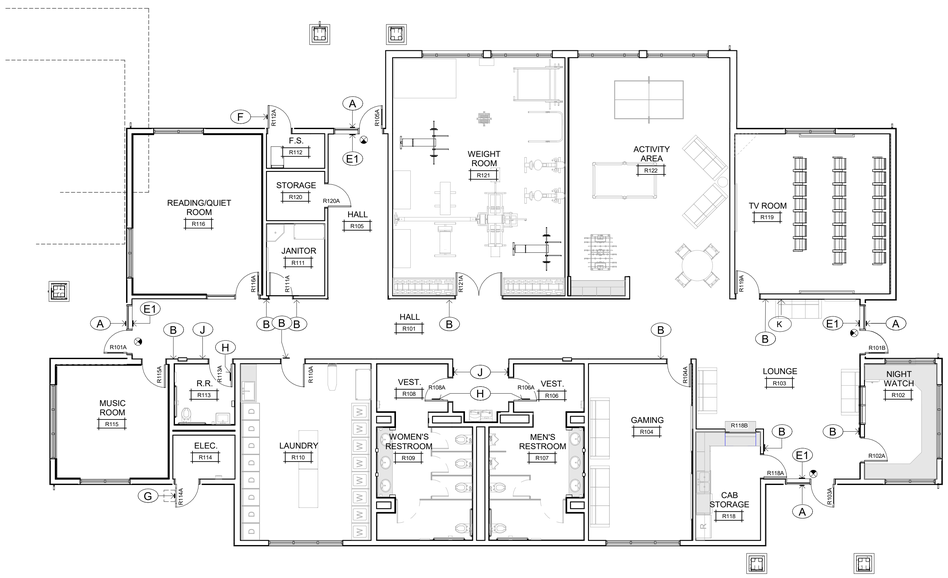

5 RECREATION BUILDING SIGNAGE PLAN

SCALE: 1/8" = 1'-0"

SIGNAGE LEGEND

SEE SPECIFICATIONS AND SHEET A965 FOR ADDITIONAL INFORMATION AND NOTES

A	ACCESSIBLE ENTRANCE IDENTIFICATION SIGN
B	ROOM IDENTIFICATION SIGN
B1	ROOM IDENTIFICATION SIGN, ALTERNATE
C	BLANK SIGNAGE PLATE
D1	MAXIMUM OCCUPANCY SIGN, 10"x6"
D2	MAXIMUM OCCUPANCY SIGN, 20"x10"
E1	EXIT SIGN
E2	EXIT ROUTE SIGN
F	FIRE SPRINKLER RISER ROOM SIGN
G	ELECTRICAL ROOM
H	TOILET ROOM IDENTIFICATION DOOR SIGN
J	ACCESSIBLE TOILET ROOM WALL SIGN
K	ASSISTIVE LISTENING SYSTEM SIGN
L	EMERGENCY EVACUATION SIGN
M	NO SMOKING SIGN
N	FIRE EXTINGUISHER SIGN
O	NFPA 704 PLACARD
P	BUILDING EXTERIOR PARKING AREA AND VEHICULAR TRAFFIC SIGNS
Q	CONCEALED ITEM SIGN
R1	ROOM IDENTIFICATION SIGN WITH INSERT
R2	ROOM IDENTIFICATION SIGN WITH MULTIPLE INSERTS
⊗	ILLUMINATED EXIT SIGN WITH DIRECTIONAL ARROW

IDENTIFICATION STAMP
DIV. OF THE STATE ARCHITECT
APP: 02-118630 INC:
REVIEWED FOR
SS ☐ FLS ☐ ACS ☑
DATE: 04/13/2021

OFFICE OF THE STATE FIRE MARSHAL
APPROVED FIRE AND PANIC ONLY
Approval of this plan does not authorize or approve any omission or deviation from applicable regulations. Final approval is subject to field inspection. One set of approved plans shall be available on the project site at all times.
PERMIT NO. 20-N-2332-CP
REVIEWED BY: LEO CATAYLO, OSFM
DATE: 4 / /2021

DGS GENERAL SERVICES
Department of General Services
State of California
Real Estate Services Division
Project Management & Development Branch
707 Third Street, Suite 4-105
West Sacramento, California 95605

NICHOLS MELBURG & ROSSETTO ARCHITECTS + ENGINEERS
300 Knollcrest Drive
Redding, CA. 96002
(530) 222-3300 (530) 222-3538 FAX
http://www.nmrdesign.com

Copyright © 2020
All ideas, designs, arrangements and plans indicated or represented by this drawing are owned by, and the property of, NICHOLS, MELBURG and ROSSETTO and were created, evolved and developed for use on, and in conjunction with, the specified project. None of such ideas, designs, arrangements or plans shall be used by, or disclosed to any person, firm or corporation for any purpose whatsoever without the written permission of NICHOLS, MELBURG and ROSSETTO.

LICENSE STAMPS

LICENSED ARCHITECT KYLE MATTHEW ROSSETTO C-22504 REN. 10/31/21 STATE OF CALIFORNIA

CONSULTANT

DRAWING STATUS
CONSTRUCTION DOCUMENTS

ISSUE

No.	Date	Description
1	10/20/2020	INITIAL PLAN REVIEW
2	01/22/2021	AGENCY RESUBMITTAL
3	03/22/2021	AGENCY RESUBMITTAL

If drawing is not 30" x 42" it is a reduced print

PROJECT
RESIDENTIAL CENTER, UKIAH: REPLACEMENT OF EXISTING RESIDENTIAL CENTER
440 EAST HILL ROAD
WILLITS, CALIFORNIA 95490
MENDOCINO COUNTY
CALIFORNIA CONSERVATION CORP

Supervisor	Designed	Drawn
KJM	DMH	NMR

DSA Application No.
02-118630

SHEET TITLE
SIGNAGE PLANS - COMET, HOUSING, EDUCATION & RECREATION BLDGS

DGS Project Number	NMR Project Number
000000000001826	18-6456

Reference North: PLOT/SITE
Sheet Scale: As indicated
Sheet Number: G301

ISSUE DATE
July 9, 2021

Plot Date: 3/18/2021 3:27:46 PM
File Name: BIM 360://CC21 Willits Residential Center/A_CCC-WRC-COMMON.rvt

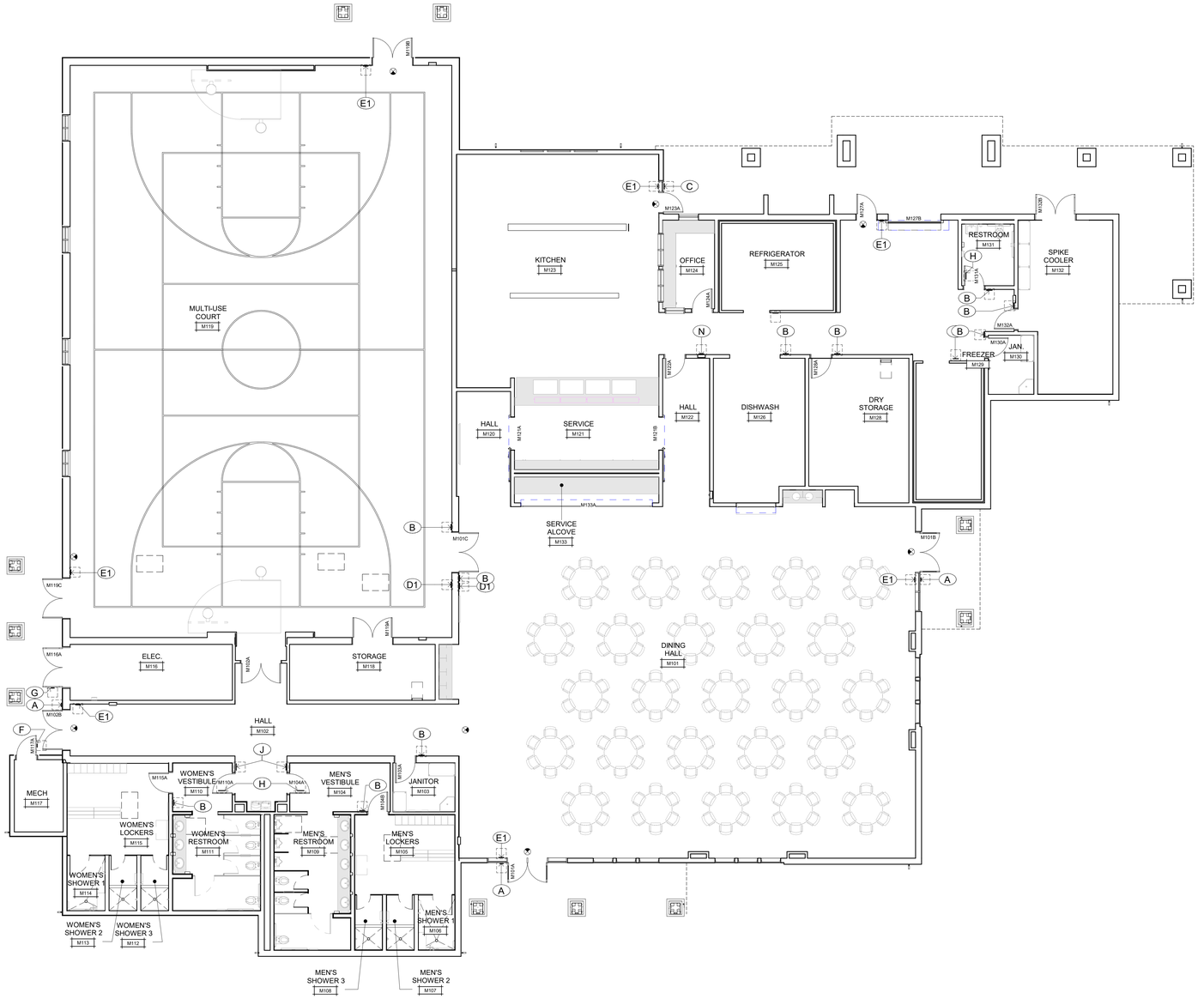

MULTI-PURPOSE BLDG. SIGNAGE PLAN

SCALE: 1/8" = 1'-0"

SIGNAGE LEGEND

SEE SPECIFICATIONS AND SHEET A965 FOR ADDITIONAL INFORMATION AND NOTES

A	ACCESSIBLE ENTRANCE IDENTIFICATION SIGN
B	ROOM IDENTIFICATION SIGN
B1	ROOM IDENTIFICATION SIGN, ALTERNATE
C	BLANK SIGNAGE PLATE
D1	MAXIMUM OCCUPANCY SIGN, 10"x6"
D2	MAXIMUM OCCUPANCY SIGN, 20"x10"
E1	EXIT SIGN
E2	EXIT ROUTE SIGN
F	FIRE SPRINKLER RISER ROOM SIGN
G	ELECTRICAL ROOM
H	TOILET ROOM IDENTIFICATION DOOR SIGN
J	ACCESSIBLE TOILET ROOM WALL SIGN
K	ASSISTIVE LISTENING SYSTEM SIGN
L	EMERGENCY EVACUATION SIGN
M	NO SMOKING SIGN
N	FIRE EXTINGUISHER SIGN
O	NFPA 704 PLACARD
P	BUILDING EXTERIOR PARKING AREA AND VEHICULAR TRAFFIC SIGNS
Q	CONCEALED ITEM SIGN
R1	ROOM IDENTIFICATION SIGN WITH INSERT
R2	ROOM IDENTIFICATION SIGN WITH MULTIPLE INSERTS
X	ILLUMINATED EXIT SIGN WITH DIRECTIONAL ARROW

IDENTIFICATION STAMP
DIV. OF THE STATE ARCHITECT
APP: 02-118630 INC:
REVIEWED FOR
SS ☐ FLS ☐ ACS ☑
DATE: 04/13/2021

OFFICE OF THE STATE FIRE MARSHAL
APPROVED FIRE AND PANIC ONLY
Approval of this plan does not authorize or approve any omission or deviation from applicable regulations. Final approval is subject to field inspection. One set of approved plans shall be available on the project site at all times.
PERMIT NO. 20-N-2332-CP
REVIEWED BY: LEO CATAYLO, OSFM
DATE: 4 / /2021

DGS GENERAL SERVICES
Department of General Services
State of California
Real Estate Services Division
Project Management & Development Branch
707 Third Street, Suite 4-105
West Sacramento, California 95605

NICHOLS MELBURG & ROSSETTO
ARCHITECTS + ENGINEERS
300 Knollcrest Drive
Redding, CA. 96002
(530) 222-3300 (530) 222-3538 FAX
http://www.nmrdesign.com

Copyright © 2020
All ideas, designs, arrangements and plans indicated or represented by this drawing are owned by, and the property of, NICHOLS, MELBURG and ROSSETTO and were created, evolved and developed for use on, and in conjunction with, the specified project. None of such ideas, designs, arrangements or plans shall be used by, or disclosed to any person, firm or corporation for any purpose whatsoever without the written permission of NICHOLS, MELBURG and ROSSETTO

LICENSE STAMPS

LICENSED ARCHITECT KYLE MATTHEW ROSSETTO C-21504 REN. 10/31/21 STATE OF CALIFORNIA

CONSULTANT

DRAWING STATUS
CONSTRUCTION DOCUMENTS

ISSUE

No.	Date	Description
1	10/20/2020	INITIAL PLAN REVIEW
2	01/22/2021	AGENCY RESUBMITTAL
3	03/22/2021	AGENCY RESUBMITTAL

If drawing is not 30" x 42" it is a reduced print

PROJECT
RESIDENTIAL CENTER, UKIAH: REPLACEMENT OF EXISTING RESIDENTIAL CENTER
440 EAST HILL ROAD
WILLITS, CALIFORNIA 95490
MENDOCINO COUNTY
CALIFORNIA CONSERVATION CORP

Supervisor	Designed	Drawn
KJM	DMH	NMR

DSA Application No.
02-118630

SHEET TITLE
SIGNAGE PLAN - MULTI-PURPOSE BUILDINGS

DGS Project Number: 00000000001826
NMR Project Number: 18-6456

Reference North
Sheet Scale: As indicated
Sheet Number: G302

ISSUE DATE
July 9, 2021

Plot Date: 3/18/2021 3:27:54 PM
File Name: BIM 360://CCC Willits Residential Center/A_CCC-WRC-COMMON.rvt

GENERAL NOTES

1. CONTRACTOR TO PROVIDE EROSION AND SEDIMENT BARRIERS AS REQUIRED BY ENVIRONMENTAL PERMITS TO PROTECT EXISTING WETLANDS FROM IMPACT, EXCEPT WHERE WETLANDS AREA IS PLANNED TO BE IMPACTED BY PROJECT.
2. CONTRACTOR SHALL MONITOR AND MAINTAIN ALL EROSION AND SEDIMENT BARRIERS IN GOOD OPERATING CONDITION THROUGHOUT THE WORK PERIOD AND THE FOLLOWING RAINY SEASON, DEFINED HEREIN TO MEAN NOVEMBER 1 THROUGH APRIL 1. MAINTENANCE INCLUDES, BUT IS NOT LIMITED TO, REMOVAL OF ACCUMULATED SEDIMENT AND/OR REPLACEMENT OF DAMAGED SEDIMENT FENCING, COIR LOGS, COIR ROLLS, AND/OR STRAW BALE DIKES. IF THE SEDIMENT BARRIER FAILS TO RETAIN SEDIMENT, CONTRACTOR SHALL EMPLOY CORRECTIVE MEASURES, AND NOTIFY CDFW IMMEDIATELY.
3. CONTRACTOR SHALL REVIEW ENVIRONMENTAL PERMITS FOR REQUIREMENTS ON ALLOWABLE EROSION AND SEDIMENT BARRIER PRODUCTS/MATERIALS.
4. CONTRACTOR SHALL CREATE NEW MITIGATION WETLANDS AS SHOWN ON PLANS AND PER THE REQUIREMENTS OF THE ENVIRONMENTAL PERMITS. CONTRACTOR SHALL GRADE MITIGATION WETLANDS AREAS AS NECESSARY TO FUNCTION PER THE ENVIRONMENTAL PERMITS. SEE LANDSCAPE DRAWINGS FOR MITIGATION WETLANDS PLANTING AND TEMPORARY IRRIGATION.
5. FUELING, LUBRICATION, MAINTENANCE, STORAGE, AND STAGING OF VEHICLES AND EQUIPMENT SHALL NOT RESULT IN A DISCHARGE OR THREATENED DISCHARGE TO ANY WATERS OF THE STATE INCLUDING DRY PORTIONS OF CREEKS AND WETLANDS. AT NO TIME SHALL THE CONTRACTOR ALLOW USE OF ANY VEHICLE OR EQUIPMENT THAT LEAKS ANY SUBSTANCE THAT MAY IMPACT WATER QUALITY.
6. THE CONTRACTOR SHALL NOT USE LEAKING VEHICLES OR EQUIPMENT WITHIN STATE WATERS OR RIPARIAN AREAS. VEHICLES AND EQUIPMENT USED WITHIN STATE WATERS SHALL BE CHECKED FOR LEAKS AT THE BEGINNING OF EACH WORK DAY.

LEGEND

- EXISTING WETLANDS AREA TO REMAIN. CONTRACTOR TO PROTECT PER ENVIRONMENTAL PERMITS
- NEW MITIGATION WETLANDS AREA, SEE LANDSCAPE DRAWINGS AND ENVIRONMENTAL PERMITS
- IMPACTED WETLANDS AREA, SEE ENVIRONMENTAL PERMITS
- EXISTING TREE TO REMAIN
- EXTENTS OF NEW GRADING, PROVIDE EROSION CONTROL AND SEDIMENT BARRIERS ALONG ENTIRE BOUNDARY

IDENTIFICATION STAMP
DIV. OF THE STATE ARCHITECT
APP: 02-118630 INC:
REVIEWED FOR
SS ☐ FLS ☐ ACS ☑
DATE: 04/13/2021

OFFICE OF THE STATE FIRE MARSHAL
APPROVED FIRE AND PANIC ONLY
Approval of this plan does not authorize or approve any omission or deviation from applicable regulations. Final approval is subject to field inspection. One set of approved plans shall be available on the project site at all times.
PERMIT NO.: 20-N-2332-CP
REVIEWED BY: LITO CATAYLO, OSFM
DATE: 4/1/2021

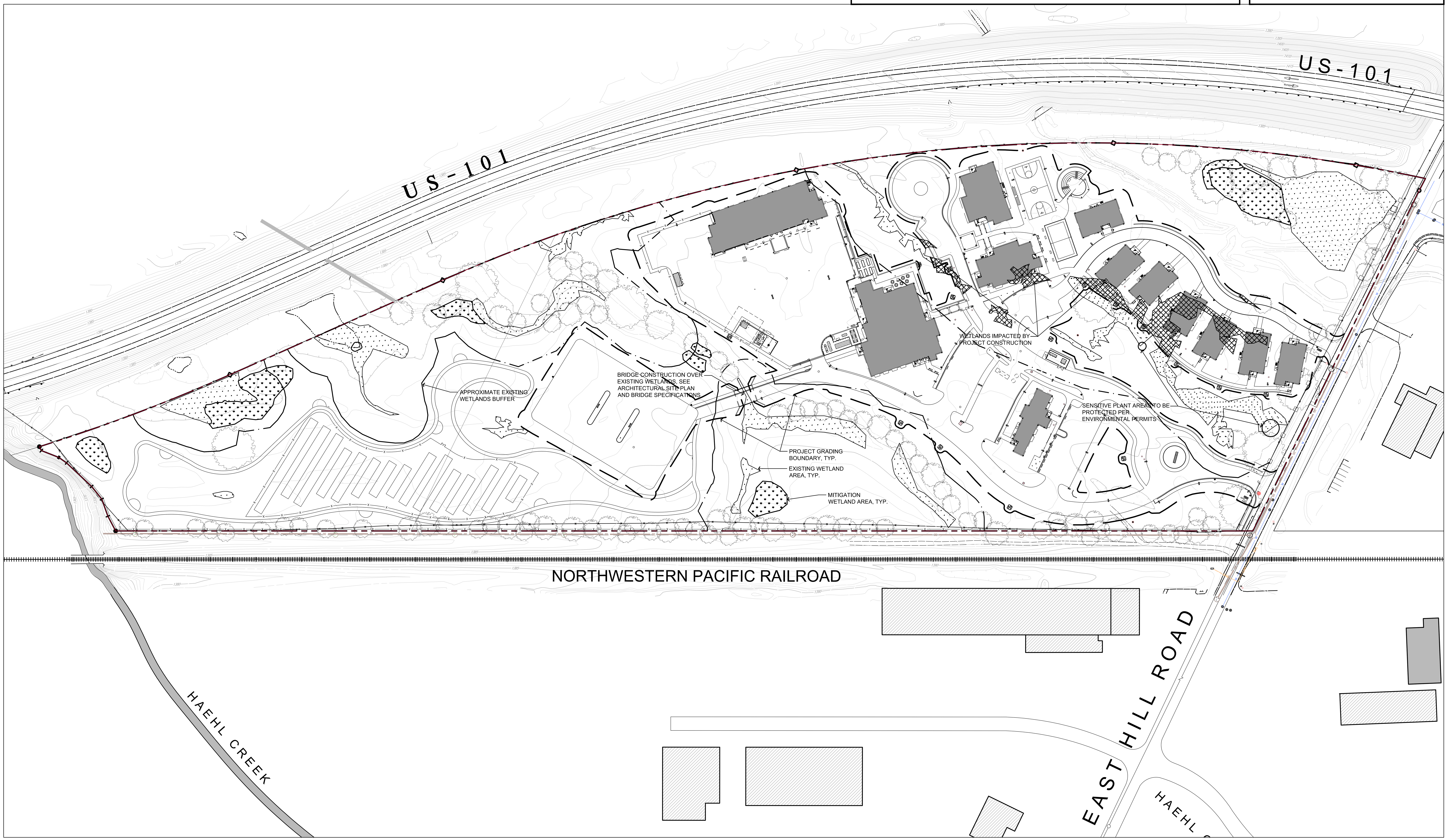

REFERENCE NORTH | TRUE NORTH

WETLANDS PROTECTION SITE PLAN

SCALE: 1" = 70'-0"

0' 35' 70' 140' 280'

DGS GENERAL SERVICES
Department of General Services
State of California
Real Estate Services Division
Project Management & Development Branch
707 Third Street, Suite 4-105
West Sacramento, California 95605

NICHOLS MELBURG & ROSSETTO
ARCHITECTS + ENGINEERS
300 Knollcrest Drive
Redding, CA. 96002
(530) 222-3300 (530) 222-3538 FAX
http://www.nmrdesign.com

Copyright © 2021
All ideas, designs, arrangements and plans indicated or represented by this drawing are owned by, and the property of, NICHOLS, MELBURG and ROSSETTO and were created, evolved and developed for use on, and in conjunction with, the specified project. None of such ideas, designs, arrangements or plans shall be used by, or disclosed to any person, firm or corporation for any purpose whatsoever without the written permission of NICHOLS, MELBURG and ROSSETTO.

LICENSE STAMPS
LICENSED ARCHITECT
KYLE MATTI
C 27504
REN. 10/31/21
STATE OF CALIFORNIA

CONSULTANT

DRAWING STATUS
CONSTRUCTION DOCUMENTS

ISSUE

No.	Date	Description
1	10/22/2020	INITIAL PLAN REVIEW
2	01/08/2021	AGENCY RESUBMITTAL
3	03/22/2021	AGENCY RESUBMITTAL

If drawing is not 30" x 42" it is a reduced print

PROJECT
RESIDENTIAL CENTER, UKIAH: REPLACEMENT OF EXISTING RESIDENTIAL CENTER
440 EAST HILL ROAD
WILLITS, CALIFORNIA, 95490
MENDOCINO COUNTY
CALIFORNIA CONSERVATION CORPS

Supervisor	Designed	Drawn
KJM	DMH	DMH

DSA Application No.
02-118630

SHEET TITLE
WETLANDS PROTECTION SITE PLAN

DGS Project Number	NMR Project Number
000000000001826	18-6456

Reference North: NORTH
Sheet Scale: 1" = 70'-0"
Sheet Number: G400

ISSUE DATE
July 9, 2021

GENERAL NOTES (MENDOCINO COUNTY)

GRADING STANDARD NOTES

AN ENCROACHMENT PERMIT MUST BE OBTAINED FROM THE COUNTY OF MENDOCINO DEPARTMENT OF TRANSPORTATION PRIOR TO ANY GRADING SHOWN ON THESE PLANS, CONTRACTOR SHALL ALSO COMPLY WITH ANY AND ALL GRADING PERMIT REQUIREMENTS ADMINISTERED BY THE COUNTY OF MENDOCINO PLANNING AND BUILDING SERVICES DEPARTMENT.

THE CONTRACTOR SHALL BE RESPONSIBLE FOR COORDINATING THE WORK WITH THE SOILS ENGINEER. ALL GRADING SHALL BE PERFORMED TO THE SATISFACTION OF THE SOILS ENGINEER AND SHALL BE IN CONFORMANCE WITH CHAPTER 18 APPENDIX J, MOST RECENT EDITION OF THE CALIFORNIA BUILDING CODE AND THE RECOMMENDATIONS CONTAINED IN THE SOILS REPORT, TITLED GEOTECHNICAL INVESTIGATION REPORT PREPARED BY SHN ENGINEERS & GEOLOGISTS AND DATED AUGUST 2020.

EARTHWORK QUANTITIES ARE APPROXIMATE AND HAVE BEEN SUMMARIZED ON THESE DRAWINGS TO PROVIDE THE REVIEWING AGENCY WITH AN OPINION OF HOW MUCH MATERIAL MAY BE MOVED TO FACILITATE THE PROPOSED IMPROVEMENTS. WHILE THE DESIGN PROFESSIONAL ANTICIPATES THAT AS MUCH AS 25,000 CY MAY BE IMPORTED WITH THIS PROJECT, ACTUAL VOLUMES ARE VARIABLE BASED ON THE SOILS ENGINEER'S ASSESSMENT OF THE SOIL ENCOUNTERED, THE CONTRACTOR'S METHOD OF STRIPPING, COMPACTION AND TRENCHING.

ROAD SUBGRADE SHALL BE COMPACTED PER THE COUNTY STANDARD ROAD SPECIFICATIONS.

AS A MINIMUM, ALL GRADED AREAS AND EXPOSED SOIL WITHIN THIS PROJECT SHALL BE SEEDED FOR EROSION CONTROL BY THE CONTRACTOR. SEED AND MULCH WILL BE APPLIED BY OCTOBER 15TH TO ALL CUT AND FILL SLOPES WITHIN OR ADJACENT TO PROJECT ROADS. SEED AND FERTILIZER WILL BE APPLIED HYDRAULICALLY OR BY HAND AT THE RATES SPECIFIED BELOW. ON SLOPES, STRAW WILL BE APPLIED BY BLOWER OR BY HAND AND ANCHORED IN PLACE BY PUNCHING. ALL CRITICAL EARTHWORK OPERATIONS SHALL BE PERFORMED DURING THE DRY WEATHER SEASON, FROM APRIL 15TH TO OCTOBER 15TH OR AS OTHERWISE APPROVED BY THE DEPARTMENT OF TRANSPORTATION. THE CLEARING OF EXISTING VEGETATION SHALL BE CONFINED WITHIN THE LIMITS OF ACTUAL EARTHWORK. STAGING OF THE WORK SHALL BE REQUIRED TO ENSURE THAT THE AMOUNT OF LAND CLEARED AT ANY TIME IS LIMITED TO THE AREA THAT CAN BE DEVELOPED DURING THE CONSTRUCTION PERIOD. STORM WATER SHALL NOT BE ALLOWED TO FLOW DIRECTLY DOWN UNPROTECTED SLOPES. ENERGY DISSIPATING STRUCTURES AND EROSION CONTROL DEVICES SHALL BE PLACED AT ALL DRAINAGE OUTLETS WHICH DISCHARGE TO NATURAL CHANNELS AS SHOWN ON THESE PLANS. ALL SEDIMENT TRAPS SHALL BE MAINTAINED BY THE CONTRACTOR UNTIL SUCH TIME THAT THE COUNTY ACCEPTS MAINTENANCE RESPONSIBILITY.

THE ABANDONMENT OR ALTERATION OF ANY AND ALL SEPTIC SYSTEMS AND WELLS SHALL COMPLY WITH THE COUNTY OF MENDOCINO HEALTH DEPARTMENT PERMIT REQUIREMENTS.

THE CONTRACTOR SHALL BE RESPONSIBLE TO PROVIDE DUST CONTROL MEASURES FOR THE ENTIRE CONSTRUCTION PERIOD OF THIS PROJECT TO THE SATISFACTION OF THE COUNTY AND AIR QUALITY MANAGEMENT DISTRICT AS APPLICABLE.

PROJECTS GREATER THAN OR EQUAL TO ONE (1) ACRE IN SIZE WILL REQUIRE A CONSTRUCTION GENERAL PERMIT AND STORM WATER POLLUTION PREVENTION PLAN (SWPPP) THROUGH THE APPROPRIATE REGIONAL WATER QUALITY CONTROL BOARD.

THE CONTRACTOR SHALL NOTIFY THE MENDOCINO COUNTY ENVIRONMENTAL HEALTH DEPARTMENT AT 234-6625 IMMEDIATELY IF HAZARDOUS WASTE OR MATERIAL IS ENCOUNTERED DURING EXCAVATION OF GRADING OPERATIONS.

UNDERGROUND CONSTRUCTION STANDARD NOTES

NO GUARANTEE IS INTENDED THAT UNDERGROUND OBSTRUCTIONS, NOT SHOWN ON THESE PLANS, MAY BE ENCOUNTERED. THOSE SHOWN ARE BASED ON THE BEST INFORMATION AVAILABLE AND THE CONTRACTOR IS CAUTIONED THAT THE OWNER, THE ENGINEER, AND THE COUNTY OF MENDOCINO ASSUME NO RESPONSIBILITY FOR ANY OBSTRUCTIONS EITHER SHOWN OR NOT SHOWN ON THESE PLANS. THE CONTRACTOR SHALL COOPERATE WITH ALL UTILITY COMPANIES WORKING WITHIN THE LIMITS OF THIS PROJECT.

CONTRACTOR SHALL NOT BEGIN EXCAVATION UNTIL ALL EXISTING UTILITIES HAVE BEEN MARKED IN THE FIELD BY THE APPLICABLE ENTITY RESPONSIBLE FOR THAT PARTICULAR UTILITY. THE CONTRACTOR SHALL NOTIFY EACH APPLICABLE ENTITY AT LEAST 24 HOURS BEFORE STARTING WORK.

UNDERGROUND SERVICE ALERT: CALL TOLL FREE (800) 227-2600 OR 811 AT LEAST 48 HOURS PRIOR TO EXCAVATION.

CONTRACTOR SHALL UNCOVER EXISTING BURIED UTILITIES WITH UTILITY OWNER TO VERIFY LOCATIONS AND ELEVATIONS OF UTILITIES. BURIED UTILITIES INCLUDE BUT ARE NOT LIMITED TO WATER MAINS AND LATERALS, SEWER MAINS, STORM DRAINS, GAS MAINS AND LATERALS, ELECTRICAL DISTRIBUTION LINES AND TELEPHONE LINES. ALL UTILITIES CONFLICTING WITH THE PROPOSED CONSTRUCTION SHALL BE RELOCATED PRIOR TO THE START OF CONSTRUCTION.

THE CONTRACTOR SHALL VERIFY EXISTING INVERTS PRIOR TO THE COMMENCEMENT OF ANY CONSTRUCTION. THE CIVIL ENGINEER IN RESPONSIBLE CHARGE OF THE WORK MAY ADJUST THE GRADE OF NEW STORM DRAIN CONSTRUCTION ACCORDINGLY WITH CONCURRENCE FROM THE COUNTY DEPARTMENT OF TRANSPORTATION.

DISTANCES AND INVERTS ARE TO AND AT THE CENTER OF THE MANHOLES, CLEANOUTS, DROP INLETS, CATCH BASINS, AND YARD DRAINS OR AS MARKED ON THE DRAWINGS.

ALL UNDERGROUND IMPROVEMENTS SHALL BE INSTALLED AND APPROVED PRIOR TO PAVING.

THE CONTRACTOR SHALL STAMP THE LETTER "S" ON THE FACE OF CURB DIRECTLY ABOVE THE SEWER LATERAL, AND THE LETTER "W" ON THE FACE OF CURB DIRECTLY ABOVE WATER SERVICES, AND "B" ON FACE OF CURB DIRECTLY ABOVE A BLOW OFF OR AIR RELIEF VALVE. AT A DRIVEWAY THE STAMP SHALL BE PLACED AT THE BACK OF RAMP. THE LETTERS SHALL BE 4" HIGH AND COMPLETELY LEGIBLE.

SURFACE MOUNTED TRANSFORMERS SHALL NOT BE USED UNLESS LOCATION OF SUCH UTILITIES ARE SHOWN ON THE PLANS AND APPROVED BY THE COUNTY.

ALL WATER UTILITIES ARE TO BE RESTRAINED VIA MECHANICALLY RESTRAINED JOINTS OR THRUST BLOCKS IN ACCORDANCE WITH CITY OF WILLITS STANDARDS. PARALLEL MAINS ON THE INTERIOR SIDE OF THE TRENCH AT BENDS AND TEES ARE TO BE RESTRAINED WITH MECHANICALLY RESTRAINED JOINTS ONLY AS TO AVOID CONFLICTS WITH THE PARALLEL WATER MAIN.

GENERAL NOTES FOR PRIVATE FIRE MAINS

ROADS SHALL BE MAINTAINED FREE OF CONSTRUCTION MATERIALS THROUGHOUT THE PROJECT DURATION TO ALLOW EMERGENCY VEHICLE ACCESS AT ALL TIMES.

HYDRANTS SHALL BE PROTECTED IF SUBJECT TO VEHICULAR DAMAGE.

PIPE AND FITTINGS SHALL BE LISTED FOR FIRE PROTECTION SERVICE AND SHALL COMPLY WITH AWWA STANDARDS.

PIPE SHALL BE DESIGNED TO WITHSTAND A WORKING PRESSURE OF NOT LESS THAN 150 PSI.

PIPE SHALL BE PVC C-900, CLASS 150 EXCEPT PIPE SHALL BE CLASS 200 DOWNSTREAM OF THE FIRE DEPARTMENT CONNECTION.

PROVIDE NUMBER 10 INSULATED COPPER WIRE SECURED TO THE TOP OF ALL PIPE AT 10-FOOT INTERVALS AS REQUIRED BY THE CITY OF WILLITS DESIGN AND CONSTRUCTION STANDARDS. ALL WIRES SHALL BE EXTENDED TO THE SURFACE AT ALL VALVE LOCATIONS, BLOWOFFS AND METER BOXES SUFFICIENT FOR LOCATOR EQUIPMENT TO BE ATTACHED.

TEES, PLUGS, CAPS, BENDS AND HYDRANT BRANCHES SHALL BE RESTRAINED AGAINST MOVEMENT. PIPE CLAMPS AND TIE-ROD ENDS, THRUST BLOCKS, LOCKED MECHANICAL OR PUSH-ON JOINTS, MECHANICAL JOINTS UTILIZING SET SCREW RETAINER GLANDS OR OTHER APPROVED METHODS OR DEVICES SHALL BE USED.

BOLTS, RODS, RETAINER GLANDS AND OTHER APPURTENANCES WHICH ARE NOT STAINLESS STEEL SHALL BE COATED WITH BITUMINOUS ASPHALT.

MAINS SHALL BE HYDROSTATICALLY TESTED AT NOT LESS THAN 200 PSI FOR TWO HOURS, OR AT 50 PSI IN EXCESS OF THE MAXIMUM STATIC PRESSURE WHEN THE MAXIMUM STATIC PRESSURE IS IN EXCESS OF 150 PSI. PRESSURE SHALL NOT BE INCREASED DURING THE TEST. TESTS SHALL BE CONDUCTED WITH ALL PIPE JOINTS AND RESTRAINING DEVICES EXPOSED.

TRENCH BACKFILL SHALL BE WELL TAMPED IN LAYERS UNDER AND AROUND PIPE TO PREVENT SETTLEMENT OR LATERAL MOVEMENT, AND SHALL CONTAIN NO ASHES, CINDERS, REFUSE, ORGANIC MATTER OR OTHER CORROSIVE MATERIALS.

MAINS AND LEAD-IN CONNECTIONS SHALL BE FLUSHED IN ACCORDANCE WITH THE REQUIREMENTS OF NFPA 24, "PRIVATE FIRE MAINS AND THEIR APPURTENANCES" IN THE PRESENCE OF A FIRE INSPECTOR PRIOR TO FINAL SIGN OFF AND STORAGE OF COMBUSTIBLE MATERIALS.

Login Name: tipt
Plot Date: March 19, 2021 - 5:30 pm
File Name: K:\2018\181957_CCC_Willits_Residential_Center\dwg\181957_SITE.dwg
XREFS: X_TOPO | 181957_SDRN | 181957_CORR | x-WRC-site | x-WRC-TOPO | x-WRC-ALTA | Ukiah_WetlandCreation_20200923

DRAINAGE STANDARD NOTES

STORM DRAIN CONDUITS SHALL CONFORM TO CALTRANS SPECIFICATIONS AND SHALL BE CLASS V R.C.P. PIPE OR HDPE PLASTIC PIPE WITH SMOOTH INTERIOR WALL. MINIMUM COVER OVER PIPE TO BE 30", EXCEPT WHERE SLURRY CEMENT BACKFILL IS PROVIDED PER MENDOT STD. A60C. THE MAXIMUM ALLOWABLE COVER SHALL BE LIMITED TO 11 FEET FOR ALL SIZES.

ALL STORM DRAIN MANHOLES SHALL BE A MINIMUM OF 48" IN DIAMETER. UNLESS OTHERWISE NOTED, MANHOLE FRAME AND COVER SHALL HAVE 24" CLEAR OPENING, AND BE HEAVY DUTY NON-ROCKING. RAISED LETTERS ON TOP OF THE COVER SHALL READ ''STORM DRAIN". PIPES SHALL NOT PROTRUDE INSIDE THE MANHOLE. PIPE ENDS SHALL BE ROUNDED.

REINFORCED CONCRETE PIPE AND CAST-IN-PLACE STORM DRAIN PIPE SHALL BE PLACED AND BACKFILLED IN ACCORDANCE WITH STANDARD DRAWINGS A60A, A60B, AND A60C. STORM DRAIN WITHIN COUNTY MAINTAINED ROADS SHALL BE MINIMUM 18 INCH DIAMETER, WITH FOLLOWING EXCEPTIONS:

A. LATERALS SERVING INDIVIDUAL PROPERTIES MAY BE 12 INCH DIAMETER
B. DRIVEWAY CULVERTS MAY BE A MINIMUM OF 12 INCH DIAMETER

PROVIDE CLASS V RCP FOR STORM DRAIN PIPING UNLESS OTHERWISE SHOWN ON DRAWINGS.

PRESERVATION OF SURVEY MONUMENTS:

CONTRACTOR IS RESPONSIBLE FOR PRESERVATION AND/OR PERPETUATION OF ALL EXISTING MONUMENTS WHICH CONTROL SUBDIVISIONS, TRACTS, BOUNDARIES, STREETS, HIGHWAYS, OR OTHER RIGHTS-OF-WAY, EASEMENTS, OR PROVIDE SURVEY CONTROL WHICH WILL BE DISTURBED OR REMOVED DUE TO CONTRACTOR'S WORK. CONTRACTOR SHALL PROVIDE A MINIMUM OF 10 WORKING DAYS NOTICE TO CIVIL ENGINEER OR SURVEYOR IN RESPONSIBLE CHARGE OF THE WORK PRIOR TO DISTURBANCE OR REMOVAL OF EXISTING MONUMENTS. CIVIL ENGINEER OR SURVEYOR IN RESPONSIBLE CHARGE OF THE WORK SHALL COORDINATE WITH CONTRACTOR TO RESET MONUMENTS OR PROVIDE PERMANENT WITNESS MONUMENTS AND FILE THE REQUIRED DOCUMENTATION WITH THE COUNTY SURVEYOR PURSUANT TO BUSINESS AND PROFESSIONS CODE SECTION 8771.

CONTRACTOR IS RESPONSIBLE FOR ALL COSTS TO RESET ANY RECORD SURVEY MONUMENTS DAMAGED BY CONTRACTOR'S FORCES - PERSONNEL OR SUB-CONTRACTORS.

MAPPING:

TOPOGRAPHIC INFORMATION SHOWN HEREON WAS PREPARED BY SHN CONSULTING ENGINEERS & GEOLOGISTS IN JULY 2018. DATA SHOWN WERE COMPILED FROM AERIAL PHOTOGRAPHY TAKEN MAY 3, 2018 BY GEOMAPS. THE AERIAL PHOTOGRAPHY WAS COMPILED AT A SCALE OF 1"=40' WITH A CONTOUR INTERVAL OF 1 FOOT. GROUND PROOFING MEASUREMENTS WERE MADE BY SHN UPON A NUMBER OF POINTS THROUGHOUT THE SITE FOR QUALITY ASSURANCE AND WERE FOUND BY SHN TO FALL WITHIN ACCEPTABLE LIMITS.

PUBLIC IMPROVEMENTS GENERAL CONSTRUCTION NOTES

ALL MATERIAL, WORKMANSHIP AND CONSTRUCTION SHALL CONFORM TO THE CITY OF WILLITS STANDARD SPECIFICATIONS AND STANDARD PLANS AND THE STATE OF CALIFORNIA D.O.T. STANDARD PLANS AND SPECIFICATIONS, LATEST EDITION. THE ON-SITE IMPROVEMENTS SHALL BE INSPECTED BY THE PUBLIC WORKS INSPECTOR FOR CONFORMANCE WITH STANDARDS AND PLANS.

CONTRACTOR SHALL OBTAIN AN ENCROACHMENT PERMIT FROM THE CITY OF WILLITS, 380 EAST COMMERCIAL STREET, BEFORE START OF WORK. CONTRACTOR SHALL COMPLY WITH ALL REQUIREMENTS OF THE PERMIT.

CONTRACTOR SHALL OBTAIN REQUIRED PERMITS FROM ALL AGENCIES AND PAY ALL FEES PRIOR TO COMMENCEMENT OF ANY WORK.

CONTRACTOR SHALL PROVIDE EMERGENCY TELEPHONE NUMBERS TO THE POLICE, FIRE, AND PUBLIC WORKS DEPARTMENTS.

CONTRACTOR SHALL GIVE THE CITY OF WILLITS PUBLIC WORKS DEPARTMENT 48 HOURS NOTICE BEFORE STARTING WORK. CALL (707) 459-4605 DURING NORMAL BUSINESS HOURS FOR INSPECTION SERVICES.

A PRE-CONSTRUCTION MEETING IS REQUIRED PRIOR TO BEGINNING OF WORK. CONTACT PUBLIC WORKS TO SCHEDULE SUCH MEETING AT (707) 459-4605.

WORK HOURS ARE LIMITED TO MONDAY THROUGH FRIDAY, 7:00 A.M. TO 6:00 P.M. INSPECTION WILL BE AVAILABLE MONDAY THROUGH FRIDAY FROM 8:00 A.M. TO 4:30 P.M. CONTRACTORS SHALL SCHEDULE INSPECTIONS 48 HOURS IN ADVANCE BY CALLING (707) 459-4605.

THE CONTRACTOR SHALL CONTACT UNDERGROUND SERVICE ALERT (USA) A MINIMUM OF 48 HOURS BEFORE UNDERGROUND CONSTRUCTION IS PERFORMED, TO ASCERTAIN THE LOCATION OF EXISTING UNDERGROUND UTILITIES WITHIN THE PROJECT AREA. CONTRACTOR IS RESPONSIBLE FOR BLACKING OUT USA MARKINGS AFTER THE COMPLETION OF CONSTRUCTION.

CONTRATOR SHALL COORDINATE ALL NECESSARY UTILITY RELOCATIONS WITH THE APPROPRIATE UTILITY COMPANIES.

DURING THE COURSE OF THE PROJECT CONSTRUCTION (INCLUDING NON-WORKING HOURS), THE CONTRACTOR SHALL PROVIDE APPROPRIATE SIGNAGE, FLASHERS AND BARRICADES FOR OPEN TRENCHES THAT ARE APPROVED BY THE CITY INSPECTOR TO WARN ONCOMING MOTORISTS, BICYCLISTS AND PEDESTRIANS OF POTENTIAL SAFETY HAZARDS.

ALL UNDERGROUND UTILITY WORK IN THE STREET AREAS SHALL BE COMPLETED PRIOR TO PLACEMENT OF BASE ROCK, UNLESS OTHERWISE NOTED. CONTRACTOR SHALL CONFORM TO EXISTING STREETS, SURROUNDING LANDSCAPE AND OTHER IMPROVEMENTS WITH A SMOOTH TRANSITION IN PAVING, CURBS, GUTTERS, SIDEWALKS, GRADING, ETC., AND TO AVOID ANY ABRUPT OR APPARENT CHANGES IN GRADES OR CROSS SLOPES, LOW SPOTS OR HAZARDOUS CONDITIONS.

ANY DISCREPANCY DISCOVERED BY CONTRACTOR IN THESE PLANS OR ANY FIELD CONDITIONS DISCOVERED BY CONTRACTOR THAT MAY DELAY OR OBSTRUCT THE PROPER COMPLETION OF THE WORK PER THESE PLANS SHALL BE BROUGHT TO THE ATTENTION OF THE CITY ENGINEER IMMEDIATELY UPON DISCOVERY. NOTIFICATION SHALL BE IN WRITING.

ITEMS SPECIFIED ON THE STANDARD PLANS ARE APPROVED FOR USE BY THE CITY OF WILLITS. ALL SUBSTITUTES OR ALTERATIONS SHALL BE SUBMITTED TO THE CITY OF WILLITS FOR REVIEW AND APPROVAL.

DEVELOPER SHALL BE RESPONSIBLE FOR OBTAINING APPROVAL OF MAIL BOX LOCATIONS FROM THE LOCAL BRANCH OF THE UNITED STATES POST OFFICE. SIDEWALK WARPS ARE REQUIRED PER THE CITY OF WILLITS STANDARD DETAIL 206.

FOR NEW SUBDIVISIONS, ALL EXISTING OVERHEAD UTILITIES AND PROPOSED UTILITIES, BOTH ON-SITE AND ALONG PROJECT FRONTAGES, SHALL BE PLACED UNDERGROUND. ELECTRIC TRANSMISSION LINES OF 26,000 VOLTS OR MORE ARE EXEMPT FROM THIS REQUIREMENT. LOCATIONS OF SURFACE MOUNTED TRANSFORMERS, PEDESTAL MOUNTED TERMINAL BOXES AND METER CABINETS SHALL BE APPROVED BY THE CITY IN ACCORDANCE WITH APPROVED PLANS AND PRIOR TO INSTALLATION.

DURING CONSTRUCTION, THE CONTRACTOR SHALL BE RESPONSIBLE FOR CONTROLLING NOISE, ODORS, DUST AND DEBRIS TO MINIMIZE IMPACTS ON SURROUNDING PROPERTIES AND ROADWAYS. CONTRACTOR SHALL BE RESPONSIBLE TO ASSURE THAT ALL CONSTRUCTION EQUIPMENT IS EQUIPPED WITH MANUFACTURERS APPROVED MUFFLER'S AND BAFFLES. FAILURE TO COMPLY MAY RESULT IN THE ISSUANCE OF A STOP WORK ORDER.

CONTRACTOR SHALL ELIMINATE OR MINIMIZE NON-STORM WATER DISCHARGES FROM THE CONSTRUCTION SITE TO STORM DRAINS AND OTHER WATER BODIES. ALL CONSTRUCTION ACTIVITIES SHALL BE PERFORMED IN A MANNER THAT MINIMIZES, TO THE MAXIMUM EXTENT PRACTICABLE, ANY POLLUTANTS ENTERING DIRECTLY OR INDIRECTLY TO THE STORM WATER SYSTEM OR GROUND WATER. THE CONTRACTOR SHALL ENSURE THAT NO CONSTRUCTION MATERIALS ARE CONVEYED INTO THE STORM DRAIN SYSTEM. ALL MATERIALS THAT COULD CAUSE WATER POLLUTION (MOTOR OIL, FUELS, PAINT, ETC.) SHALL BE STORED AND USED IN A MANNER THAT WILL NOT CAU7SE ANY POLLUTION. CONTRACTOR SHALL MEET WITH THE CITY INSPECTOR PRIOR TO OCTOBER 15 TO REVIEW STATUS OF PROJECT'S EROSION CONTROL AND WATER POLLUTION PREVENTION MEASURES.

THE CONTRACTOR SHALL HAVE ALL EROSION CONTROL MEASURES ON SITE DURING THE COURSE OF THE WORK AND INSTALLED PRIOR TO OCTOBER 15 OR BY THE FIRST RAIN EVENT, WHICHEVER OCCURS FIRST.

THE CITY OF WILLITS FIRE DEPARTMENT REQUIRES THAT A FIRE HYDRANT BE IN SERVICE WITHIN 250 FEET OF THE FURTHEST POINT OF CONSTRUCTION PRIOR TO THE STOCKPILING OF COMBUSTIBLE MATERIALS OR THE BEGINNING OF COMBUSTIBLE CONSTRUCTION.

IF THE STREETS OR ACCESS ROADS IN A DEVELOPMENT ARE NOT PAVED FROM OCTOBER 15TH THROUGH APRIL 15TH, THE CITY REQUIRES THAT A TEMPORARY ALL WEATHER ACCSS ROAD BE PROVIDED. TEMPORARY FIRE DEPARTMENT ACCESS ROUTES SHALL CONSIST OF A MINIMUM 12 INCHES OF BASE ROCK MATERIAL, OR AS PROPOSED BY A GEOTECHNICAL ENGINEER AND APPROVED BY THE CITY ENGINEER, AND A MINIMUM 20 FEET IN WIDTH.

IN THE EVENT THAT ARCHEOLOGICAL SITE INDICATORS (CHIPPED CHERT, OBSIDIAN TOOLS, WASTE FLAKES, GRINDING IMPLEMENTS, DARKENED SOIL CONTAINING BONE FRAGMENTS AND SHELLFISH REMAINS, OR CERAMICS, GLASS OR METAL FRAGMENTS) ARE UNCOVERED, THE CITY ENGINEER SHALL BE CONTACTED IMMEDIATELY. ALL GROUND DISTURBING WORK SHALL CEASE IN THE VICINITY OF ANY DISCOVERY UNTIL AN ARCHEOLOGIST COMPLETES AN EVALUATION OF SIGNIFICANCE.

IF HAZARDOUS MATERIALS ARE ENCOUNTERED DURING CONSTRUCTION, THE CONTRACTOR SHALL HALT CONSTRUCTION IMMEDIATELY, NOTIFY THE CITY, AND IMPLEMENT REMEDIATION (AS DIRECTED BY THE CITY OR ITS AGENT) IN ACCORDANCE WITH ANY REQUIREMENTS OF THE MENDOCINO COUNTY ENVIRONMENTAL HEALTH DEPARTMENT AND THE NORTH COAST REGIONAL WATER QUALITY CONTROL BOARD.

THE CONTRACTOR SHALL BE REQUIRED TO MAINTAIN TRAFFIC FLOW ON AFFECTED ROADWAYS DURING NON-WORKING HOURS AND TO MINIMIZE TRAFFIC RESTRICTION DURING CONSTRUCTION. FOR ALL LANE CLOSURES AND DETOURS, A TRAFFIC CONTROL PLAN SHALL BE SUBMITTED TO THE CITY ENGINEER FOR REVIEW AND APPROVAL AT LEAST FIVE WORKING DAYS BEFORE THE SCHEDULED LANE CLOSURE. THE CONTRACTOR SHALL BE REQUIRED TO FOLLOW TRAFFIC SAFETY MEASURES IN ACCORDANCE WITH THE CALIFORNIA MANUAL ON UNIFORM TRAFFIC CONTROL DEVICES, LATEST EDITION. THE CITY'S EMERGENCY SERVICE PROVIDERS SHALL BE NOTIFIED OF PROPOSED CONSTRUCTION SCHEDULED BY THE CONTRACTOR(S). THE CONTRACTOR(S) SHALL NOTIFY EMERGENCY SERVICE PROVIDERS IN WRITING AT LEAST 24 HOURS IN ADVANCE OF ITS PROPOSED SCHEDULE OF WORK.

SIDEWALK WARPS SHALL BE PROVIDED TO ALLOW A CLEAR 6-FOOT WALKWAY IN ALL LOCATIONS INCLUDING WHERE MAILBOXES, UTILITY POLES, FIRE HYDRANTS, STREET SIGNS AND GUY WIRES ARE TO BE INSTALLED. SIDEWALK WARPS ARE REQUIRED PER THE CITY OF WILLITS STANDARD DETAIL 207.

CONSTRUCTION TRAFFIC SHALL BE LIMITED TO THE HAUL ROUTE SPECIFIED IN THE ENCROACHMENT PERMIT AND APPROVED BY THE CITY ENGINEER.

NOTIFICATION FOR INSPECTIONS
APPROVAL OF ALL WORK SHALL BE NECESSARY AT THE COMPLETION OF EACH STAGE OF THE WORK AND SUCH APPROVAL MUST BE OBTAINED BEFORE SUBSEQUENT STAGES OF WORK MAY BE COMMENCED. ADDITIONALLY, THE CITY INSPECTOR SHALL BE NOTIFIED AT LEAST 48 HOURS IN ADVANCE OF ANY OF THE FOLLOWING STAGES OF WORK. ANY CONSTRUCTION OR EXCAVATION REQUIRING INSPECTION THAT IS UNDERTAKEN WITHOUT INSPECTION IS SUBJECT TO RECONSTRUCTION AND REEXCAVATION AT THE CONTRACTOR'S EXPENSE. INSPECTION MUST, AT A MINIMUM, BE SCHEDULED FOR THE FOLLOWING WORK:

PRIOR TO COMMENCEMENT OF GRADING ACTIVITIES, ADEQUATE TREE PROTECTION FENCING SHALL BE INSTALLED, WHERE APPROPRIATE.

COMPACTION AND PREPARATION OF EMBANKMENTS, EXCAVATIONS, AND SUBGRADE SHALL BE OBSERVED BY THE PROJECT SOILS ENGINEER AND CERTIFICATION OF COMPACTION SUBMITTED TO THE CITY INSPECTOR.

CONSTRUCTION OF FORMS FOR ALL CONCRETE STRUCTURES, INCLUDING CURBS, GUTTERS, AND SIDEWALKS.

EXCAVATION FOR STORM DRAINS AND CULVERTS.

PLACING OF CONCRETE IN STRUCTURES, INCLUDING CURBS, GUTTERS AND SIDEWALKS.

PLACING OF STORM DRAINS AND CULVERT PIPES.

EXCAVATION AND BACK FILL FOR STRUCTURES AND PIPES AND PUBLIC UTILITIES. WATER AND SEWER FACILITIES MUST BE INSPECTED BY THE COMPANY/AGENCY WITH JURISDICTION, INCLUDING PRIVATE FACILITIES.

CONSTRUCTION OF ROADSIDE DITCHES AND OTHER DRAINAGE WAYS.

PLACING AND COMPACTING OF BASE MATERIAL. IF MORE THAN ONE COURSE OR TYPE OF BASE OR SUBBASE IS TO BE USED, APPROVAL SHALL BE NECESSARY FOR EACH COURSE AND/OR TYPE.

PLACING OF PAVEMENT OR SURFACING. WITHIN 48 HOURS OF PAVING, ALL WATER VALVE BOXES, CLEANOUTS AND MANHOLE FRAMES AND COVERS SHALL BE BROUGHT TO GRADE AND INSPECTED.

STRIPING AND SIGNING LAYOUT AND PLACEMENT.

FINAL CLEAN UP AND PUNCH LISTS.

UPON COMPLETION OF CONSTRUCTION, FINAL CONNECTION WILL BE MADE BY THE CONTRACTOR AT THE DEVELOPER'S EXPENSE UNDER INSPECTION BY THE CITY UNLESS OTHERWISE SPECIFIED ON THE PLANS.

IN ADDITION TO THE ABOVE, CITY INSPECTION IS REQUIRED AS DIRECTED BY THE CITY INSPECTOR BASED ON SPECIFIC SITE CONDITIONS.

ADDITIONAL PUBLIC GRADING NOTES

A GRADING OR ENCROACHMENT PERMIT SHALL BE ISSUED BY THE CITY OF WILLITS PUBLIC WORKS DEPARTMENT PRIOR TO ANY GRADING SHOWN ON THESE PLANS, UNLESS EXEMPT UNDER THE UNIFORM BUILDING CODE.

THE CONTRACTOR SHALL BE RESPONSIBLE FOR COORDINATING HIS WORK WITH THE GEOTECHNICAL ENGINEER. REFER TO THE GEOTECHNICAL INVESTIGATION PREPARED BY SHN ENGINEERS & GEOLOGISTS AND DATED AUGUST 2020. ALL GRADING SHALL BE PERFORMED TO THE SATISFACTION OF THE GEOTECHNICAL ENGINEER AND SHALL BE IN CONFORMANCE WITH THE PRELIMINARY GEOTECHNICAL REPORT AND CHAPTER 33-APPENDIX AND 70-APPENDIX OF THE ADOPTED UNIFORM BUILDING CODE.

STREET SUBGRADE SHALL BE COMPACTED TO 95% RELATIVE COMPACTION TO A DEPTH OF NO LESS THAN 6" IN THE ROADWAY SECTION. ASPHALT CONCRETE AND CLASS 2 AGGREGATE BASE SHALL BE COMPACTED TO 95% RELATIVE COMPACTION.

THE USE OF THE SAND CONE METHODS (SUCH AS ASTM 1557 OR CAL 216) FOR DETERMINING FIELD DENSITIES WILL NOT BE ALLOWED AS A SUBSTITUTE FOR NUCLEAR GAUGE TESTING.

ALL EXISTING WELLS, SEPTIC TANKS AND/OR UNDERGROUND FUEL STORAGE TANKS SHALL BE ABANDONED UNDER PERMIT AND INSPECTION OF THE MENDOCINO COUNTY ENVIRONMENTAL HEALTH DEPARTMENT OR OTHER DESIGNATED AGENCY.

ANY EXCESS MATERIALS SHALL BE CONSIDERED THE PROPERTY OF THE CONTRACTOR AND SHALL BE DISPOSED OF AWAY FROM THE JOB SIDE IN ACCORDANCE WITH APPLICABLE LOCAL, STATE AND FEDERAL REGULATIONS.

ALL TREE PROTECTION FENCING MUST BE INSTALLED AND INSPECTED PRIOR TO COMMENCEMENT OF GRADING OPERATIONS. FENCING SHALL BE MAINTAINED THROUGHOUT THE CONSTRUCTION PERIOD.

PUBLIC DUST CONTROL NOTES

THE CONTRACTOR SHALL BE RESPONSIBLE TO PROVIDE DUST CONTROL MEASURES FOR THE ENTIRE CONSTRUCTION PERIOD OF THE PROJECT TO THE SATISFACTION OF THE CITY INSPECTOR.

CONSTRUCTION EQUIPMENT SHALL BE MAINTAINED IN PROPER WORKING ORDER AND SHALL NOT BE ALLOWED TO IDLE FOR A PERIOD OF LONGER THAN 30 MINUTES.

TO MINIMIZE FUGITIVE DUST AND THE RELEASE OF PM10, THE CONTRACTOR SHALL IMPLEMENT A DUST CONTROL PROGRAM. DUST CONTROL MEASURES SHALL INCLUDE, BUT ARE NOT LIMITED TO, THE FOLLOWING:

ACTIVE CONSTRUCTION SITE SHALL BE WATERED AS NEEDED, PREFERABLY IN THE LATE MORNING AND WHEN WORK HAS CEASED FOR THE DAY. THE AMOUNT OF WATER USED SHALL NOT BE EXCESSIVE TO CAUSE SOIL CARRY-OVER OR WASH-OFF OUTSIDE THE BOUNDARIES OF THE WORKING AREA.

STOCKPILES OF LOOSE MATERIAL SHALL BE COVERED AT ALL TIMES, EXCEPT WHEN THIS WOULD INTERFERE WITH IMMEDIATE CONSTRUCTION ACTIVITIES. SHEETING SHALL BE ADEQUATELY WEIGHTED OR SECURED TO KEEP THE SHEETING IN PLACE DURING NON-WORK PERIODS.

ALL CLEARING, GRADING, EARTH MOVING OR EXCAVATION ACTIVITIES SHALL CEASE WHEN THE AVERAGE WIND SPEED FOR ONE HOUR EXCEEDS 20 MILES PER HOUR (MPH).

THE AREA DISTURBED BY EXCAVATION OR GRADING SHALL BE KEPT TO THE MINIMUM REQUIRED TO CONSTRUCT THE PROJECT.

WHEN TRAVELING ON EXPOSED SOILS, CONSTRUCTION SITE VEHICLE SPEED SHALL BE LIMITED TO 15 MPH.

HAUL VEHICLES SHALL BE COVERED WHEN NOT ACTIVELY ENGAGED IN SITE CONSTRUCTION ACTIVITY.

STREETS SHALL BE SWEPT REGULARLY AND KEPT FREE OF DIRT AND DEBRIS.

ANY PROJECT RELATED DEBRIS, DEBRIS AND WASTE SHALL BE DISPOSED OF IN ACCORDANCE WITH APPLICABLE FEDERAL, STATE AND LOCAL STATUES AND REGULATIONS.

PUBLIC EROSION CONTROL NOTES

A NOTICE OF INTENT SHALL BE FILED BY THE OWNER FOR ALL PROJECTS OVER ONE (1) ACRE IN AREA. THE CONTRACTOR SHALL COMPLY WITH ALL REQUIREMENTS OF THE PERMIT.

EROSION CONTROL MEASURES SHALL BE INSTALLED AND IN PLACE AT ALL TIMES BETWEEN OCTOBER 1 AND APRIL 30. INSTALLATION SHALL BE IN ACCORDANCE WITH THE APPROVED EROSION CONTROL PLAN.

THE CONTRACTOR SHALL BE RESPONSIBLE FOR CONSTANT MAINTENANCE OF EROSION CONTROL MEASURES. SITE EROSION CONTROL SHALL BE INSPECTED BY THE CONTRACTOR AND CLEANED AND EROSION CONTROL MEASURES REINSTALLED IF NECESSARY AFTER EVERY MAJOR STORM.

THE CONTRACTOR SHALL BE RESPONSIBLE FOR THE CLEANUP OF MUD AND DEBRIS CARRIED ONTO SURROUNDING STREETS TO THE SATISFACTION OF THE CITY INSPECTOR.

ALL GRADED AREAS AND EXPOSED SOIL WITHIN THIS PROJECT SHALL BE SEEDED FOR EROSION CONTROL BY THE CONTRACTOR. SEED AND MULCH WILL BE APPLIED BY OCTOBER 1ST TO ALL CUT AND FILL SLOPES WITHIN OR ADJACENT TO PROJECT ROADS. SEED AND FERTILIZER WILL BE APPLIED HYDRAULICALLY OR BY HAND AT THE RATES SPECIFIED BELOW. ON SLOPES, STRAW WILL BE APPLIED BY BLOWER OR BY HAND AND ANCHORED IN PLACE BY PUNCHING.

HYDROSEEDING MIX SHALL BE PER SPECIFICATIONS SECTION 32 92 19 - SEEDING

CLEARING AND GRUBBING, MASS GRADING AND EARTHWORK OPERATIONS SHALL BE AVOIDED DURING THE RAINY SEASON, FROM OCTOBER 1ST THROUGH APRIL 30TH UNLESS OTHERWISE APPROVED BY THE CITY ENGINEER. THE CLEARING OF EXISTING VEGETATION SHALL BE CONFINED TO WITHIN THE LIMITS OF ACTUAL EARTHWORK. INCREMENTAL DEVELOPMENT SHALL BE REQUIRED TO ENSURE THAT THE AMOUNT OF LAND CLEARED AT ANY TIME IS LIMITED TO THE AREA THAT CAN BE DEVELOPED DURING THE CONSTRUCTION PERIOD. STORM WATER SHALL NOT BE ALLOWED TO FLOW DIRECTLY DOWN UNPROTECTED SLOPES. ENERGY DISSIPATING STRUCTURES AND EROSION CONTROL DEVICES SHALL BE PLACED AT ALL DRAINAGE OUTLETS WHICH DISCHARGE TO NATURAL CHANNELS, AS SHOWN ON THESE PLANS. ALL SEDIMENT TRAPS SHALL BE MAINTAINED BY THE OWNER.

ADDITIONAL UNDERGROUND UTILITY NOTES

NO GUARANTEE IS INTENDED THAT UNDERGROUND OBSTRUCTIONS, NOT SHOWN ON THESE PLANS WILL NOT BE ENCOUNTERED. THOSE SHOWN ARE BASED ON THE BEST INFORMATION AVAILABLE AND THE CONTRACTOR IS CAUTIONED THAT THE OWNER, THE ENGINEER, AND THE CITY OF WILLITS ASSUME NO RESPONSIBILITY FOR ANY OBSTRUCTIONS EITHER SHOWN OR NOT SHOWN ON THESE PLANS. THE CONTRACTOR SHALL COOPERATE WITH ALL UTILITY COMPANIES WORKING WITHIN THE LIMITS OF THIS PROJECT.

CONTRACTOR SHALL NOT BEGIN EXCAVATION UNTIL ALL EXISTING UTILITIES HAVE BEEN MARKED IN THE FIELD BY THE APPLICABLE ENTITY RESPONSIBLE FOR THAT PARTICULAR UTILITY. THE CONTRACTOR SHALL NOTIFY EACH APPLICABLE ENTITY AT LEAST 24 HOURS BEFORE STARTING WORK. HAND DIGGING IS REQUIRED IF TRENCH IS WITHIN 12" OF ANY EXISTING UTILITY.

UNDERGROUND SERVICE ALERT: CALL TOLL FREE (800) 642-2444 AT LEAST 48 HOURS PRIOR TO EXCAVATION.

THE CONTRACTOR SHALL OBTAIN A TRENCH PERMIT FROM THE CALIFORNIA DIVISION OF INDUSTRIAL SAFETY BEFORE EXCAVATION OF TRENCHES. A COPY OF THE PERMIT MUST BE ON FILE WITH THE CITY BEFORE TRENCH EXCAVATION MAY BEGIN.

CONTRACTOR SHALL UNCOVER EXISTING BURIED UTILITIES WITH UTILITY OWNER TO VERIFY LOCATIONS AND ELEVATIONS OF UTILITIES. BURIED UTILITIES INCLUDE BUT ARE NOT LIMITED TO WATER MAINS AND SERVICES, SEWER MAINS AND LATERALS, STORM DRAINS, GAS MAINS AND SERVICES, ELECTRICAL DISTRIBUTION LINES, CABLE TELEVISION LINES, AND TELEPHONE LINES. ALL UTILITIES CONFLICTING WITH THE PROPOSED CONSTRUCTION SHALL BE RELOCATED BEFORE THE START OF CONSTRUCTION.

THE CONTRACTOR SHALL VERIFY EXISTING INVERTS PRIOR TO THE COMMENCEMENT OF ANY CONSTRUCTION. THE PROJECT AND/OR DESIGN ENGINEER MAY ADJUST THE GRADE OF NEW SEWER AND STORM DRAIN CONSTRUCTION ACCORDINGLY WITH CONCURRENCE FROM THE CITY ENGINEER.

DISTANCES AND INVERTS ARE TO AND AT THE CENTER OF THE MANHOLES, CLEANOUTS, DROP INLETS, CATCH BASINS, AND YARD DRAINS OR AS MARKED ON THE DRAWINGS.

ALL UNDERGROUND IMPROVEMENTS SHALL BE INSTALLED AND APPROVED PRIOR TO PAVING.

THE CONTRACTOR SHALL STAMP THE LETTER "S" ON THE FACE OF CURB DIRECTLY ABOVE THE SEWER LATERAL, AND THE LETTER "W" ON THE FACE OF CURB DIRECTLY ABOVE WATER SERVICES, AND "B" ON FACE OF CURB DIRECTLY ABOVE A BLOW OFF OR AIR RELIEF VALVE. AT A DRIVEWAY THE STAMP SHALL BE PLACED AT THE BACK OF RAMP. THE LETTERS SHALL BE 4" HIGH AND COMPLETELY LEGIBLE.

ADDITIONAL SANITARY SEWER NOTES

GRAVITY SEWER PIPE SHALL BE POLYVINYL CHLORIDE (PVC), SDR 26. SEWER FORCE MAIN (SSFM) SHALL BE JM Eagle C906 IPS DR21

ALL SANITARY SEWER MANHOLES SHALL BE A MINIMUM OF 48" IN DIAMETER. UNLESS OTHERWISE NOTED, MANHOLE FRAME AND COVER SHALL HAVE 24" CLEAR OPENING, AND BE HEAVY DUTY NON-ROCKING. RAISED LETTERS ON TOP OF THE COVER SHALL READ "SANITARY SEWER."

ADDITIONAL PUBLIC STORM DRAIN NOTES

TRENCHING, BACKFILL AND RESURFACING REQUIRED FOR INSTALLATION OF SEWER SYSTEM FACILITIES SHALL BE SHALL BE IN ACCORDANCE WITH CITY STANDARD 300.

STORM DRAIN PIPE SHALL BE REINFORCED CONCRETE, HIGH DENSITY POLYETHYLENE, OR CAST IN PLACE CONCRETE PIPE CONFORMING TO CALTRANS STANDARD SPECIFICATIONS. CAST IN PLACE PIPE MAY NOT BE USED IN EXISTING STREETS WITHOUT THE EXPRESS AUTHORIZATION OF THE CITY ENGINEER.

THE MINIMUM COVER OVER STORM DRAIN PIPE SHALL BE 24" MEASURED FROM SUBGRADE AND THE MAXIMUM ALLOWABLE COVER SHALL BE LIMITED TO 11 FEET MEASURED FROM FINISHED SURFACE.

TRENCHING, BACKFILL AND RESURFACING FOR STORM DRAIN PIPE SHALL BE IN ACCORDANCE WITH CITY STANDARD 222.

ALL STORM DRAIN MANHOLES SHALL BE A MINIMUM OF 48" IN DIAMETER. UNLESS OTHERWISE NOTED, MANHOLE FRAME AND COVER SHALL HAVE 24" CLEAR OPENING, AND BE HEAVY DUTY NON-ROCKING. RAISED LETTERS ON TOP OF THE COVER SHALL READ "STORM DRAIN". PIPES SHALL NOT PROTRUDE INSIDE THE MANHOLE AND PIPE ENDS SHALL BE ROUNDED.

STORM DRAIN WITHIN CITY MAINTAINED ROADS SHALL BE MINIMUM 18 INCH DIAMETER, WITH THE EXCEPTION OF LATERALS WHICH MAY BE 15 IN. DIAMETER.

PRIOR TO ACCEPTANCE OF THE STORM DRAIN SYSTEM, THE CONTRACTOR SHALL PROVIDE CCTV INSPECTION OF ALL STORM DRAIN LINES TO ENSURE THEY ARE FREE AND CLEAR OF ALL DEBRIS AND SILT. ALL VIDEO TAPES SHALL BE SUBMITTED TO THE CITY WITH WRITTEN REPORTS AND SHALL BE SUBJECT TO REVIEW AND APPROVAL. IF CLEANING OF THE PIPES ARE NEEDED, THE CONTRACTOR SHALL NOT BE ALLOWED TO WASH SILT AND/OR DEBRIS INTO THE EXISTING CITY STORM DRAIN SYSTEM INCLUDING ANY CREEKS OR OPEN WATERWAYS.

ADDITIONAL WATER SYSTEM NOTES

START EXCAVATION BY EXPOSING END OF EXISTING WATER MAIN TO DETERMINE ITS LINE AND GRADE. START NEW MAIN 8-10 FEET FROM AND ON SAME LINE AND GRADE AS EXISTING MAIN. PIPE LAYING SHALL THEN BE ADJUSTED SO DEPTH OF NEW MAIN CONFORMS TO FOLLOWING MINIMUM COVER NOTE.

MINIMUM DEPTH OF COVER FROM FINISHED GRADE SHALL BE: 32" FOR 6" MAINS, 36" FOR 8" MAINS, 44" FOR 12" MAINS, 48" FOR 14" AND LARGER MAINS.

A NO. 10 INSULATED COPPER WIRE SHALL BE LAID ON TOP OF AND ALONG ENTIRE LENGTH OF ALL MAINS AND SHALL BE EXTENDED TO THE SURFACE AT ALL VALVES, BLOWOFFS AND METER BOX LOCATIONS SUFFICIENTLY FOR LOCATOR EQUIPMENT TO BE ATTACHED. FASTEN THE WIRE TO THE TOP OF THE PIPE SO AS NOT TO BE DISPLACED BY BACKFILLING PROCEDURE (ONE METHOD OF ACCOMPLISHING THIS IS TO AFFIX THE WIRE TO THE TOP OF THE PIPE WITH DUCT TAPE AT APPROXIMATELY 10 FEET INTERVALS).

WATER MAINS TO BE CONSTRUCTED WITHIN 10' OF SEWER MAIN REQUIRE SPECIAL INSTALLATION AND DESIGN MUST BE IN ACCORDANCE WITH THE STATE OF CALIFORNIA DEPARTMENT OF PUBLIC HEALTH STANDARDS. THE DESIGN SHALL BE SPECIFICALLY APPROVED BY THE CITY ENGINEER.

ALL TRENCHING, BACKFILL AND RESURFACING REQUIRED FOR INSTALLATION OF WATER SYSTEM FACILITIES SHALL BE SHALL BE IN ACCORDANCE WITH CITY STANDARD 222.

ALL METER BOXES, VAULTS AND PITS SHALL BE BEDDED ON A 3" MINIMUM THICK, 3/4" DRAIN ROCK, CLASS 2 AGGREGATE BASE, OR OTHER CLEAN MATERIAL WITH TYPICAL SAND EQUIVALENT OF 20 MINIMUM, UNCONTAMINATED BY NATIVE SOIL, AGAINST COMPACTED OR UNDISTURBED BASE. THE GRAVEL BED SHALL EXTEND TO A 4" MINIMUM BEYOND ALL SIDES OF THE METER BOX. BOX SHALL BE SET FLUSH WITH TOP OF CURB, SIDEWALK OR GROUND, WHICHEVER IS APPLICABLE.

METER BOXES SHALL BE LOCATED OUT OF TRAFFIC LOADING AREAS.

WHEN HYDRANTS ARE CONSTRUCTED, BURLAP BAGS SHALL BE PLACED OVER THE HYDRANTS (INDICATING THAT THE HYDRANT IS NOT IN SERVICE) UNTIL SUCH TIME THAT THE CITY HAS FLOW TESTED THE HYDRANT AND VERIFIED THAT IT IS OPERATING CORRECTLY.

PUBLIC SIGNING, STRIPING AND PAVEMENT MARKINGS

CONTRACTOR SHALL NOTIFY THE CITY OF WILLITS PUBLIC WORKS DEPARTMENT AT (707) 459-4605 OF INTENT TO PLACE ANY PAVEMENT MARKER, TRAFFIC STRIPE, AND PAVEMENT MARKING LAYOUT LINES 10 WORKING DAYS BEFORE THE LAYOUT WORK IS TO BE PERFORMED. ALL LABOR EQUIPMENT AND MATERIALS SHALL BE PROVIDED BY THE CONTRACTOR.

ALL LAYOUT WORK IS TO BE PERFORMED BY THE CONTRACTOR AND SHALL BE FIELD APPROVED BY A CITY INSPECTOR BEFORE THE ACTUAL WORK BEGINS.

PAVEMENT MARKERS AND TRAFFIC STRIPE DETAIL REFERENCE NUMBERS ARE SHOWN ON CALTRANS 2018 STANDARD PLANS A20-A, A20-B, AND A20-C.

ROADSIDE SIGNS SHALL BE LOCATED AS SHOWN HEREIN IN CONFORMANCE WITH CITY STANDARDS AND AS DIRECTED BY THE CITY ENGINEER. SIGN INSTALLATION SHALL BE IN ACCORDANCE WITH THE PROVISIONS OF SECTION 56, "SIGNS", OF THE STANDARD SPECIFICATIONS, AND AS DIRECTED BY THE CITY ENGINEER.

SIGN PANELS SHALL CONFORM TO THE CURRENT CALTRANS SIGN PANEL SPECIFICATIONS.

SIGN PANELS SHALL BE MOUNTED ON METAL POSTS AS DESIGNATED HEREIN. WOOD POST INSTALLATION SHALL BE AS SHOWN HEREIN, INCLUDING STANDARD PLANS. WOOD POSTS SHALL BE PROVIDED WITH BREAKAWAY FEATURE. METAL POSTS SHALL BE 2-INCH SCHEDULE 40 GALVANIZED STEEL PIPE CONFORMING TO ASTM A120 WITH GALVANIZED TOP CAPS. EACH SIGN PANEL SHALL BE ATTACHED TO METAL POSTS WITH A MINIMUM OF (2) 5/16-INCH SELF-TAPPING SCREWS OR BOLTS. ALL FASTENERS AND ATTACHMENT HARDWARE SHALL BE GALVANIZED.

MARKERS AND DELINEATORS SHALL BE INSTALLED AT LOCATIONS AS SHOWN HEREIN AND IN ACCORDANCE WITH THE PROVISIONS OF SECTION 82, "MARKERS AND DELINEATORS" OF THE STANDARD SPECIFICATIONS AND AS DIRECTED BY THE CITY ENGINEER.

TRAFFIC STRIPES AND PAVEMENT MARKINGS SHALL BE AS SHOWN HEREIN, IN ACCORDANCE WITH THE PROVISIONS OF SECTION 84, "TRAFFIC STRIPES AND PAVEMENT MARKINGS" OF THE STANDARD SPECIFICATIONS AND AS DIRECTED BY THE CITY.

ALL PAVEMENT MARKINGS, INCLUDING STOP LINES, AND ALL CHANNELIZING LINES SHALL BE THERMOPLASTIC. ALL OTHER TRAFFIC STRIPES SHALL BE PAINTED, UNLESS OTHERWISE SHOWN OR NOTED HEREIN.

THERMOPLASTIC TRAFFIC STRIPES AND PAVEMENT MARKINGS SHALL CONFORM TO THE PROVISIONS OF SECTION 84-2 "THERMOPLASTIC TRAFFIC STRIPES AND PAVEMENT MARKINGS" OF THE STANDARD SPECIFICATIONS.

SECTIONS 84-102, "MATERIALS" AND 84-2.03 "MANUFACTURING, PACKAGING AND LABELING", OF THE STANDARD SPECIFICATIONS ARE DELETED.

THERMOPLASTIC MATERIAL SHALL BE APPLIED AT A MINIMUM THICKNESS OF 0.125 INCH.

THERMOPLASTIC MATERIAL SHALL CONFORM TO STATE SPECIFICATION 8010-21C-21 OR 8010-21C-19. GLASS BEADS TO BE APPLIED TO THE SURFACE OF MOLTEN THERMOPLASTIC MATERIAL SHALL CONFORM TO THE REQUIREMENTS OF STATE SPECIFICATION 8010-11E-22 (TYPE II) OR AASHTO DESIGNATION M-247(TYPE I).

STATE SPECIFICATIONS FOR THERMOPLASTIC MATERIAL AND GLASS BEADS MAY BE OBTAINED FROM THE TRANSPORTATION LABORATORY, P.O. BOX 19128, SACRAMENTO, CA. 95819 (TELEPHONE: 916-739-2400)

PAVEMENT MARKERS SHALL BE INSTALLED IN ACCORDANCE WITH THE PROVISIONS OF SECTION 85, "PAVEMENT MARKERS" OF THE STANDARD SPECIFICATIONS. PAVEMENT MARKERS SHALL BE PLACED TO THE LINE ESTABLISHED BY CITY.

EXISTING PAINTED/THERMOPLASTIC TRAFFIC STRIPES AND PAVEMENT MARKINGS AND RAISED PAVEMENT MARKERS WHICH CONFLICT WITH NEW TRAFFIC STRIPING AND PAVEMENT MARKING PLANS SHALL BE REMOVED BY THE CONTRACTOR, IN ACCORDANCE WITH SECTION 15 OF THE STANDARD SPECIFICATIONS.

SYMBOLS & LEGEND

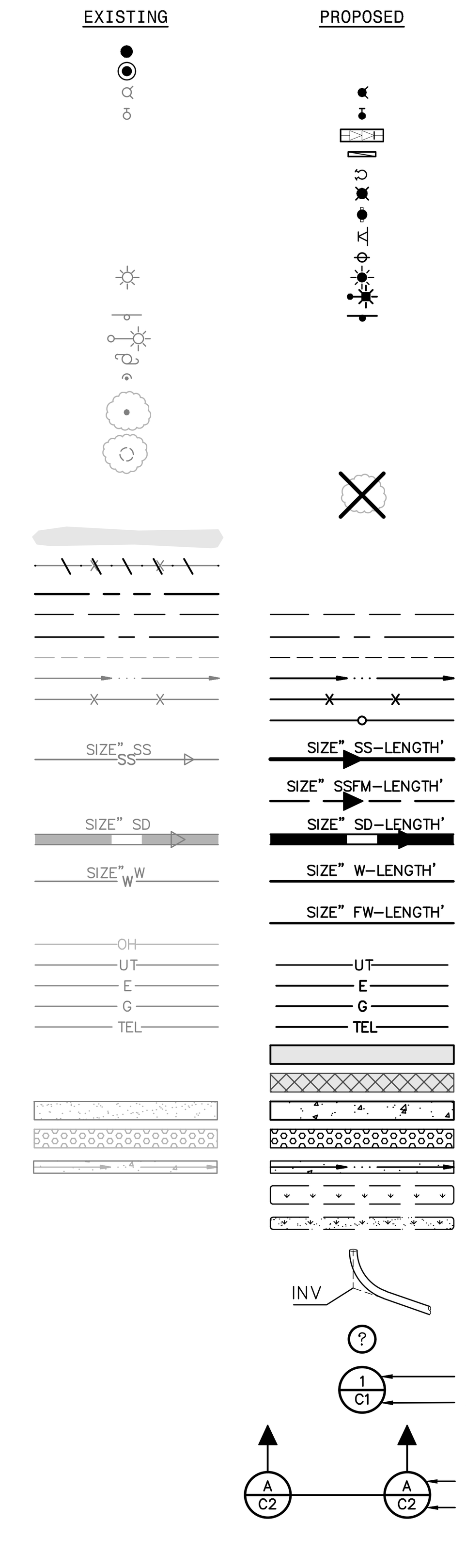

IRON PIPE
CENTERLINE MONUMENT
BLOW OFF
VALVE
DOUBLE DETECTOR CHECK VALVE
BACKFLOW PREVENTION DEVICE
FIRE DEPARTMENT CONNECTION
FIRE HYDRANT
POST INDICATOR VALVE
REDUCER
RISER
LIGHT POLE
LIGHT POLE W/ ARM
STREET SIGN
STREET LIGHT
UTILITY POLE
GUY ANCHOR
TREE
TREE CLUSTER
TREE TO BE REMOVED
WETLAND DELINEATION
EXISTING FEATURE TO BE REMOVED
PROPERTY LINE
EASEMENT
CENTERLINE
GRADE BREAK
FLOW LINE
FENCE
TREE PROTECTION FENCE
SANITARY SEWER
SANITARY SEWER FORCE MAIN
STORM DRAIN
WATER
FIRE WATER
OVERHEAD UTILITY LINE
UNDERGROUND UTILITY LINE
UNDERGROUND ELECTRIC LINE
UNDERGROUND GAS LINE
UNDERGROUND TELECOM LINE
ASPHALT
ASPHALT GRIND & OVERLAY
CONCRETE
DETECTABLE WARNING
VALLEY GUTTER
BIORETENTION FACILITY
VEGITATED SWALE
INVERT AT CLEANOUT
KEYNOTE
DETAIL IDENTIFICATION
SHEET WHERE DETAIL IS SHOWN
CROSS SECTION IDENTIFICATION
SHEET WHERE CROSS SECTION IS SHOWN

ABBREVIATIONS

±	MORE OR LESS
Δ	DELTA
AB	AGGREGATE BASE
AC	ASPHALT CONCRETE
APN	ASSESSOR'S PARCEL NUMBER
BC	BEGIN CURVE
BCT	BEGIN CURB TRANSITION
BFP	BACKFLOW PREVENTER
BLDG	BUILDING
BLRD	BOLLARD
BM	BENCHMARK
BO	BLOWOFF
BSL	BUILDING SETBACK LINE
CB	CATCH BASIN
CC	POINT OF COMPOUND CURVE
CL	CENTERLINE
CL2	CLASS II
CO	CLEAN OUT
CONC	CONCRETE
CY	CUBIC YARD
DDC	DOUBLE DETECTOR CHECK
DI	DROP INLET
DIA	DIAMETER
DN	DOCUMENT NUMBER
DW	DRIVEWAY
E	ELECTRIC
ECT	END CURB TRANSITION
EG	EXISTING GROUND
ELEV	ELEVATION
EP	EDGE OF PAVEMENT
ER	EDGE OF ROAD
ESMT	EASEMENT
EX	EXISTING
FDC	FIRE DEPARTMENT CONNECTION
FF	FINISHED FLOOR
FG	FINISHED GRADE
FH	FIRE HYDRANT
FL	SURFACE FLOWLINE
FT	FOOT
G	GAS
GB	GRADE BREAK
GI	GRATE INLET
HB	HOSE BIB
HDRL	HANDRAIL
HORZ	HORIZONTAL
HT	HEIGHT
INV	BOTTOM INSIDE OF PIPE
IP	IRON PIPE
IR	IRRIGATION
L	LENGTH
LP	LIGHT POLE
MAX	MAXIMUM
MH	MANHOLE
MIN	MINIMUM
NO	NUMBER
NTS	NOT TO SCALE
OH	OVERHEAD UTILITY LINE
PAD	PAD GRADE
PCC	PORTLAND CEMENT CONCRETE
PG&E	PACIFIC GAS & ELECTRIC
PIV	POST INDICATOR VALVE
PL	PROPERTY LINE
PUBL	PUBLIC
PUE	PUBLIC UTILITY EASEMENT
PVI	POINT OF VERTICAL INTERSECTION
PVT	PRIVATE
R	RADIUS
RC	POINT OF REVERSE CURVE
RR	RAILROAD
RSPR	RIPRAP ROCK SLOPE PROTECTION
RTWL	RETAINING WALL
R/W	RIGHT OF WAY
RWL	RAIN WATER LEADER
S=	SLOPE
SD	STORM DRAIN
SDCO	STORM DRAIN CLEAN OUT
SDMH	STORM DRAIN MANHOLE
SF	SQUARE FEET
SS	SANITARY SEWER
SSCO	SANITARY SEWER CLEAN OUT
SSFM	SANITARY SEWER FORCE MAIN
SSMH	SANITARY SEWER MANHOLE
STA	STATION
STD	STANDARD
TB	TOP OF BOX
TC	TOP FACE OF CURB
TEL	TELECOMMUNICATION LINE
TF	TRANSFORMER
TG	TOP OF GRATE
TW	TOP OF WALL
TYP	TYPICAL
UB	UTILITY BOX
UP	UTILITY POLE
UT	UNDERGROUND UTILITY LINE
VC	VERTICAL CURVE
VERT	VERTICAL
VLT	VAULT
W	WATER
WM	WATER METER
WS	WATER SERVICE

IDENTIFICATION STAMP
DIV. OF THE STATE ARCHITECT
APP: 02-118630 INC:
REVIEWED FOR
SS ☐ FLS ☐ ACS ☑
DATE: 04/13/2021

OFFICE OF THE STATE FIRE MARSHAL
APPROVED FIRE AND PANIC ONLY
Approval of this plan does not authorize or approve any omission or deviation from applicable regulations. Final approval is subject to field inspection. One set of approved plans shall be available on the project site at all times.
PERMIT NO.: 20-N-2332-CP
REVIEWED BY: LITO CATAYLO, OSFM
DATE: 4/1/2021

GENERAL SERVICES
Department of General Services
State of California
Real Estate Services Division
Project Management & Development Branch
707 Third Street, Suite 4-105
West Sacramento, California 95605

NICHOLS MELBURG & ROSSETTO
ARCHITECTS + ENGINEERS
300 Knollcrest Drive
Redding, CA. 96002
(530) 222-3300 (530) 222-3538 FAX
http://www.nmrdesign.com

Copyright © 2021
All ideas, designs, arrangements and plans indicated or represented by this drawing are owned by, and the property of, NICHOLS, MELBURG and ROSSETTO and were created, evolved and developed for use on, and in conjunction with, the specified project. None of such ideas, designs, arrangements or plans shall be used by, or disclosed to any person, firm or corporation for any purpose whatsoever without the written permission of NICHOLS, MELBURG and ROSSETTO.

LICENSE STAMPS
REGISTERED PROFESSIONAL ENGINEER
GREGGORY H. JENNINGS
No. C-68337
CIVIL
STATE OF CALIFORNIA
3/25/2021

CONSULTANT
BKF
200 4th STREET
SUITE 300
SANTA ROSA, CA 95401
(707) 583-8500
www.bkf.com

DRAWING STATUS
CONSTRUCTION DOCUMENTS

ISSUE

No.	Date	Description
1	10/22/2020	INITIAL PLAN REVIEW
2	01/08/2021	AGENCY RESUBMITTAL
3	03/22/2021	AGENCY RESUBMITTAL

If drawing is not 30" x 42" it is a reduced print

PROJECT
RESIDENTIAL CENTER, UKIAH: REPLACEMENT OF EXISTING RESIDENTIAL CENTER
440 EAST HILL ROAD
WILLITS, CALIFORNIA, 95490
MENDOCINO COUNTY
CALIFORNIA CONSERVATION CORPS

Supervisor	Designed	Drawn
RFC	GHJ	BRL

DSA Application No.
02-118630

SHEET TITLE
NOTES, LEGEND AND ABBREVIATIONS

DGS Project Number: 000000000001826
NMR Project Number: 18-6456
Reference North
Sheet Scale: AS SHOWN
Sheet Number: C0.01
ISSUE DATE: July 9, 2021

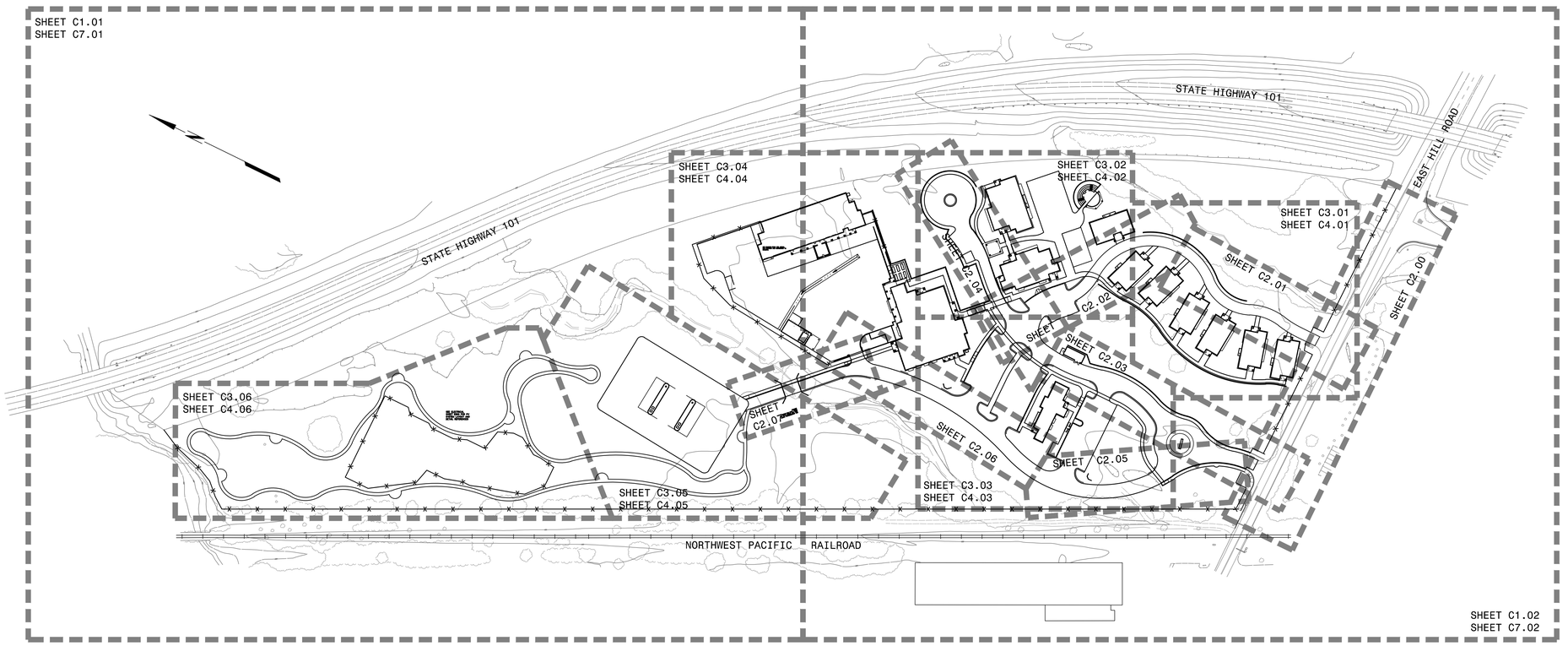

TABLE CC105.1
NUMBER AND DISTRIBUTION OF FIRE HYDRANTS

FIRE-FLOW REQUIREMENT (gpm)	MINIMUM NUMBER OF HYDRANTS	AVERAGE SPACING BETWEEN HYDRANTS[a, b] (feet)	MAXIMUM DISTANCE FROM ANY POINT ON STREET OR ROAD FRONTAGE TO A HYDRANT[a]
1,750 or less	1	500	250

REQUIRED FIRE FLOW: 1,500 GPM

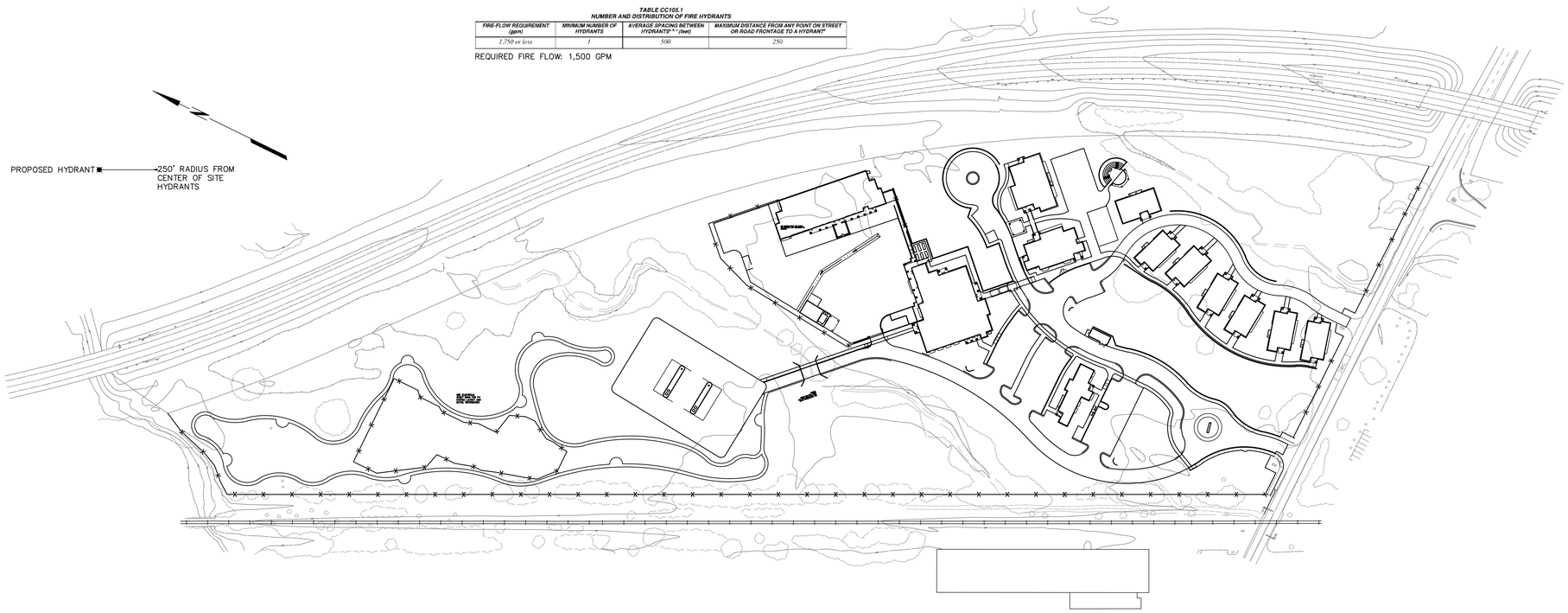

Login Name: lpt
Plot Date: March 25, 2021 - 1:36 pm
File Name: K:\2018\181957_CCC_Willits_Residential_Center\dwg\181957_SITE.dwg
XREFS: TL_ORO | 181957_SORR | 181957_CORR | x-WRC-site | x-WRC-TOPO | x-WRC--ALTA | Ukiah_WetlandDelin_20200923

IDENTIFICATION STAMP
DIV. OF THE STATE ARCHITECT
APP: 02-118630 INC:
REVIEWED FOR
SS ☐ FLS ☐ ACS ☑
DATE: 04/13/2021

OFFICE OF THE STATE FIRE MARSHAL
APPROVED FIRE AND PANIC ONLY
Approval of this plan does not authorize or approve any omission or deviation from applicable regulations. Final approval is subject to field inspection. One set of approved plans shall be available on the project site at all times.
PERMIT NO. 20-N-2332-CP
REVIEWED BY: LEO CATAYLO, OSFM
DATE: 4 / /2021

DGS GENERAL SERVICES
Department of General Services
State of California
Real Estate Services Division
Project Management & Development Branch
707 Third Street, Suite 4-105
West Sacramento, California 95605

NICHOLS MELBURG & ROSSETTO
ARCHITECTS + ENGINEERS
300 Knollcrest Drive
Redding, CA. 96002
(530) 222-3300 (530) 222-3538 FAX
http://www.nmrdesign.com

Copyright © 2021
All ideas, designs, arrangements and plans indicated or represented by this drawing are owned by, and the property of, NICHOLS, MELBURG and ROSSETTO and were created, evolved and developed for use on, and in conjunction with, the specified project. None of such ideas, designs, arrangements or plans shall be used by, or disclosed to any person, firm or corporation for any purpose whatsoever without the written permission of NICHOLS, MELBURG and ROSSETTO.

LICENSE STAMPS

REGISTERED PROFESSIONAL ENGINEER
GREGORY H. JENNINGS
No. C-68337
CIVIL
STATE OF CALIFORNIA
3/25/2021

CONSULTANT

BKF
200 4th STREET
SUITE 300
SANTA ROSA, CA 95401
(707) 583-8500
www.bkf.com

DRAWING STATUS
CONSTRUCTION DOCUMENTS

ISSUE

No.	Date	Description
1	10/22/2020	INITIAL PLAN REVIEW
2	01/08/2021	AGENCY RESUBMITTAL
3	03/22/2021	AGENCY RESUBMITTAL

If drawing is not 30" x 42" it is a reduced print

PROJECT
RESIDENTIAL CENTER, UKIAH: REPLACEMENT OF EXISTING RESIDENTIAL CENTER
440 EAST HILL ROAD
WILLITS, CALIFORNIA, 95490
MENDOCINO COUNTY
CALIFORNIA CONSERVATION CORPS

Supervisor	Designed	Drawn
RFC	GHJ	BRL

DSA Application No.
02-118630

SHEET TITLE
KEY MAP

DGS Project Number: 0000000000001826
NMR Project Number: 18-6456
Reference North: NORTH
Sheet Scale: AS SHOWN
Sheet Number: C0.02

ISSUE DATE
July 9, 2021

GENERAL DEMOLITION NOTES:

1. REMOVE EXISTING MATERIAL AND FEATURES TO FACILITATE THE PROPOSED IMPROVEMENTS AND DISPOSE OF UNUSED MATERIAL IN ACCORDANCE WITH CONTRACT DOCUMENTS, RESOURCE AGENCY PERMITS, LOCAL, COUNTY, STATE, AND FEDERAL REGULATIONS.
2. EARTHWORK SHALL BE DONE IN ACCORDANCE WITH THE GEOTECHNICAL REPORT AND UNDER THE DIRECTION OF THE GEOTECHNICAL ENGINEER.
3. DEMOLITION OF MATERIALS, UTILITIES, AND OTHER FEATURES MUST BE DONE IN ACCORDANCE WITH CITY OF WILLITS STANDARDS. CONTRACTOR MUST OBTAIN AN ENCROACHMENT PERMIT FROM THE CITY OF WILLITS PRIOR TO BEGINNING WORK IN THE RIGHT-OF-WAY. SEE SHEET C2.00 FOR PUBLIC IMPROVEMENTS.

TREE TO BE REMOVED

OBJECT/FEATURE TO BE REMOVED

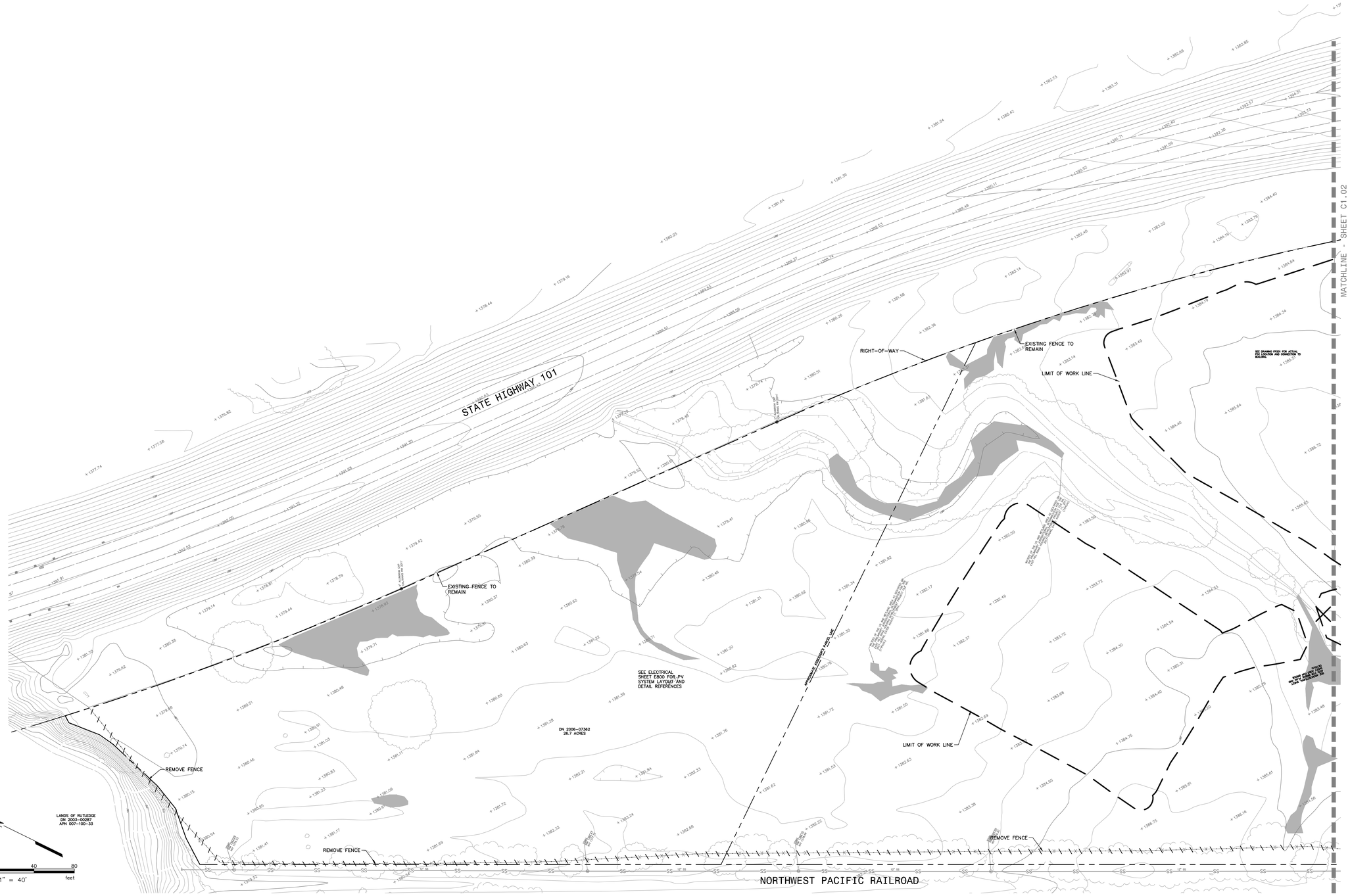

Login Name: tlat
Plot Date: March 19, 2021 - 5:34 pm
File Name: K:\DWS\181957_CCC_Willits_Residential_Center\dwg\181957_SITE.dwg
XREFS: "x_TOPO | 181957_DORN | 181957_DORN | x-MRC-Site | x-MRC-TOPO | x-MRC-ALTA | Ukiah_WetlandCreation_20200923

IDENTIFICATION STAMP
DIV. OF THE STATE ARCHITECT
APP: 02-118630 INC:
REVIEWED FOR
SS ☐ FLS ☐ ACS ☑
DATE: 04/13/2021

OFFICE OF THE STATE FIRE MARSHAL
APPROVED FIRE AND PANIC ONLY
Approval of this plan does not authorize or approve any omission or deviation from applicable regulations. Final approval is subject to field inspection. One set of approved plans shall be available on the project site at all times.
PERMIT NO. 20-N-2332-CP
REVIEWED BY: LEO CATAYLO, OSFM
DATE: 4 / /2021

GENERAL SERVICES
Department of General Services
State of California
Real Estate Services Division
Project Management & Development Branch
707 Third Street, Suite 4-105
West Sacramento, California 95605

NICHOLS MELBURG & ROSSETTO
ARCHITECTS + ENGINEERS
300 Knollcrest Drive
Redding, CA. 96002
(530) 222-3300 (530) 222-3538 FAX
http://www.nmrdesign.com

Copyright © 2021
All ideas, designs, arrangements and plans indicated or represented by this drawing are owned by, and the property of, NICHOLS, MELBURG and ROSSETTO and were created, evolved and developed for use on, and in conjunction with, the specified project. None of such ideas, designs, arrangements or plans shall be used by, or disclosed to any person, firm or corporation for any purpose whatsoever without the written permission of NICHOLS, MELBURG and ROSSETTO.

LICENSE STAMPS

REGISTERED PROFESSIONAL ENGINEER
GREGGORY H. JENNINGS
No. C-68337
CIVIL
STATE OF CALIFORNIA
3/25/2021

CONSULTANT

BKF
200 4th STREET
SUITE 300
SANTA ROSA, CA 95401
(707) 583-8500
www.bkf.com

DRAWING STATUS

CONSTRUCTION DOCUMENTS

ISSUE

No.	Date	Description
1	10/22/2020	INITIAL PLAN REVIEW
2	01/08/2021	AGENCY RESUBMITTAL
3	03/22/2021	AGENCY RESUBMITTAL

If drawing is not 30" x 42" it is a reduced print

PROJECT

RESIDENTIAL CENTER, UKIAH: REPLACEMENT OF EXISTING RESIDENTIAL CENTER

440 EAST HILL ROAD
WILLITS, CALIFORNIA, 95490
MENDOCINO COUNTY
CALIFORNIA CONSERVATION CORPS

Supervisor	Designed	Drawn
RFC	GHJ	BRL

DSA Application No.
02-118630

SHEET TITLE

DEMOLITION PLAN (NORTH)

DGS Project Number	NMR Project Number
0000000000001826	18-6456

Reference North: NORTH
Sheet Scale: AS SHOWN
Sheet Number: C1.01

ISSUE DATE

July 9, 2021

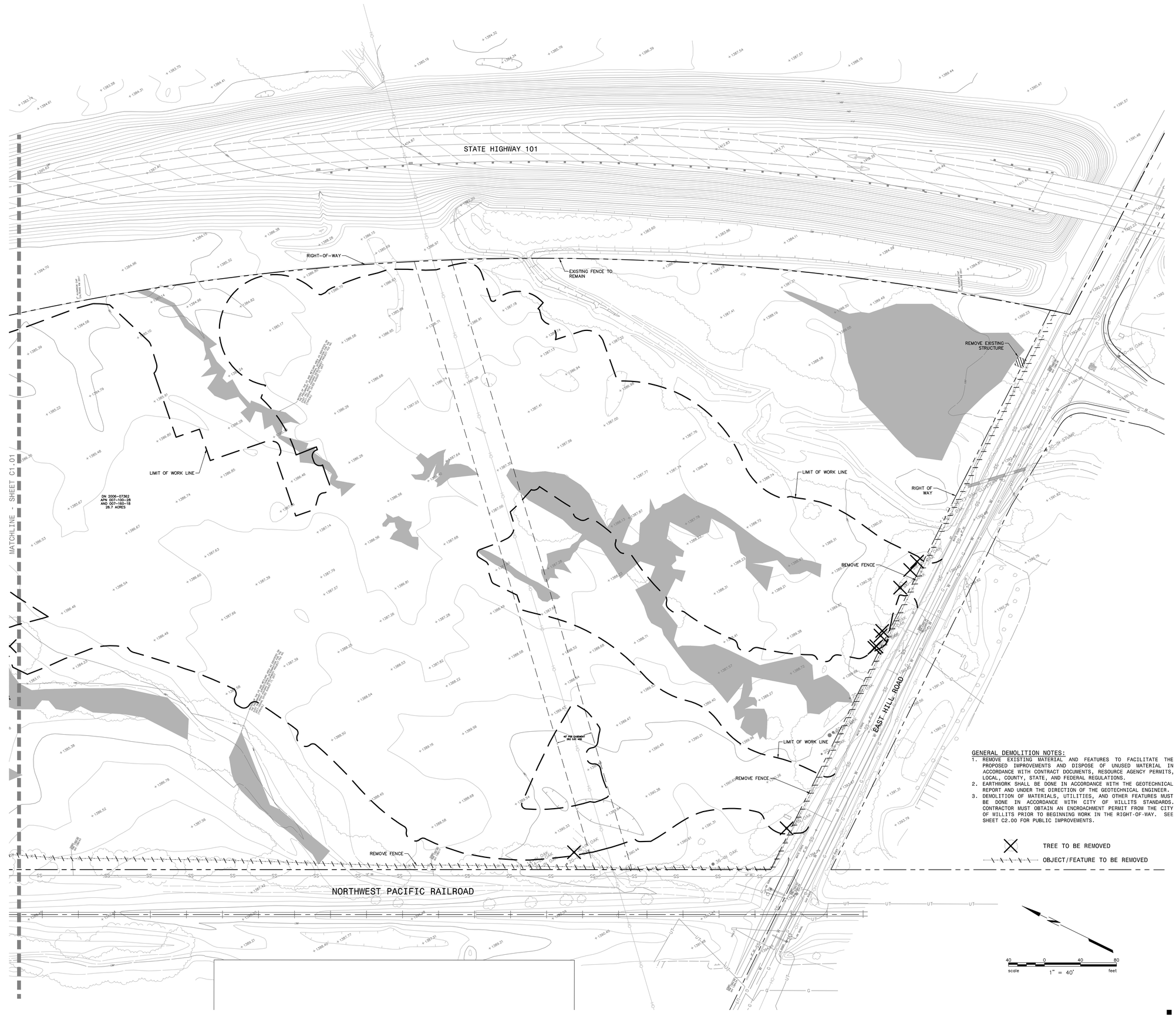

GENERAL DEMOLITION NOTES:

1. REMOVE EXISTING MATERIAL AND FEATURES TO FACILITATE THE PROPOSED IMPROVEMENTS AND DISPOSE OF UNUSED MATERIAL IN ACCORDANCE WITH CONTRACT DOCUMENTS, RESOURCE AGENCY PERMITS, LOCAL, COUNTY, STATE, AND FEDERAL REGULATIONS.
2. EARTHWORK SHALL BE DONE IN ACCORDANCE WITH THE GEOTECHNICAL REPORT AND UNDER THE DIRECTION OF THE GEOTECHNICAL ENGINEER.
3. DEMOLITION OF MATERIALS, UTILITIES, AND OTHER FEATURES MUST BE DONE IN ACCORDANCE WITH CITY OF WILLITS STANDARDS. CONTRACTOR MUST OBTAIN AN ENCROACHMENT PERMIT FROM THE CITY OF WILLITS PRIOR TO BEGINNING WORK IN THE RIGHT-OF-WAY. SEE SHEET C2.00 FOR PUBLIC IMPROVEMENTS.

IDENTIFICATION STAMP
DIV. OF THE STATE ARCHITECT
APP: 02-118630 INC:
REVIEWED FOR
SS ☐ FLS ☐ ACS ☑
DATE: 04/13/2021

OFFICE OF THE STATE FIRE MARSHAL
APPROVED FIRE AND PANIC ONLY
Approval of this plan does not authorize or approve any omission or deviation from applicable regulations. Final approval is subject to field inspection. One set of approved plans shall be available on the project site at all times.
PERMIT NO. 20-N-2332-CP
REVIEWED BY: LEO CATAYLO, OSFM
DATE: 4 / /2021

GENERAL SERVICES
Department of General Services
State of California
Real Estate Services Division
Project Management & Development Branch
707 Third Street, Suite 4-105
West Sacramento, California 95605

NICHOLS MELBURG & ROSSETTO
ARCHITECTS + ENGINEERS
300 Knollcrest Drive
Redding, CA. 96002
(530) 222-3300 (530) 222-3538 FAX
http://www.nmrdesign.com

Copyright © 2021
All ideas, designs, arrangements and plans indicated or represented by this drawing are owned by, and the property of, NICHOLS, MELBURG and ROSSETTO and were created, evolved and developed for use on, and in conjunction with, the specified project. None of such ideas, designs, arrangements or plans shall be used by, or disclosed to any person, firm or corporation for any purpose whatsoever without the written permission of NICHOLS, MELBURG and ROSSETTO.

LICENSE STAMPS

REGISTERED PROFESSIONAL ENGINEER
GREGGORY H. JENNINGS
No. C-68337
CIVIL
STATE OF CALIFORNIA
3/25/2021

CONSULTANT

BKF
200 4th STREET
SUITE 300
SANTA ROSA, CA 95401
(707) 583-8500
www.bkf.com

DRAWING STATUS

CONSTRUCTION DOCUMENTS

ISSUE

No.	Date	Description
1	10/22/2020	INITIAL PLAN REVIEW
2	01/08/2021	AGENCY RESUBMITTAL
3	03/22/2021	AGENCY RESUBMITTAL

If drawing is not 30" x 42" it is a reduced print

PROJECT

RESIDENTIAL CENTER, UKIAH: REPLACEMENT OF EXISTING RESIDENTIAL CENTER

440 EAST HILL ROAD
WILLITS, CALIFORNIA, 95490
MENDOCINO COUNTY
CALIFORNIA CONSERVATION CORPS

Supervisor	Designed	Drawn
RFC	GHJ	BRL

DSA Application No.
02-118630

SHEET TITLE

DEMOLITION PLAN (SOUTH)

DGS Project Number	NMR Project Number
0000000000001826	18-6456

Reference North: NORTH
Sheet Scale: AS SHOWN
Sheet Number: C1.02

ISSUE DATE

July 9, 2021

Login Name: tjd1
Plot Date: March 19, 2021 - 5:34 pm
File Name: K:\2018\181957_DCC_Willits_Residential_Center\dwg\181957_SITE.dwg
XREFS: X_OPO | 181957_SIGN | 181957_CONN | x-WRC-SITE | x-WRC-TOPO | x-WRC-ALTA | Ukiah_WetlandDelineation_20200923

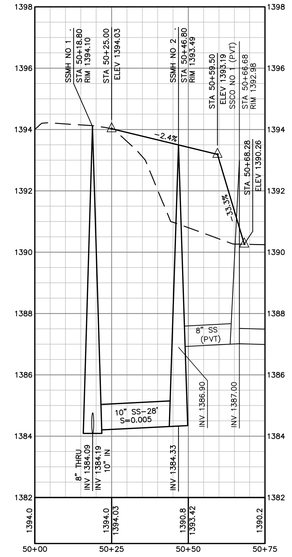

PUBLIC KEYNOTES

1. NEW SEWER MANHOLE ON EXISTING 8-INCH SEWER LINE IN ACCORDANCE WITH CITY OF WILLITS STANDARDS.
2. CUT IN 12-INCH x 12-INCH x 10-INCH TEE AND GATE VALVE. BY CITY FORCES.
3. SIDEWALK IN ACCORDANCE WITH CITY OF WILLITS STANDARD 205.
4. CURB & GUTTER IN ACCORDANCE WITH CITY STANDARD 205.
5. SAWCUT AND CONFORM IN ACCORDANCE WITH CITY OF WILLITS STANDARD 215.
6. RETAINING WALL. REFER TO THE STRUCTURAL DRAWINGS. BLOCK OUT THE TOP OF WALL AT LOCATIONS APPROVED BY THE ARCHITECT AND OWNER AND IN A MANNER WHICH AVOIDS UTILITIES WITHIN THE WALL TO ALLOW STORM WATER TO PASS OVER THE WALL.
7. 10-INCH WILKINS MODEL 350DA DOUBLE DETECTOR CHECK OR EQUIVALENT WITH OS&Y GATE VALVES IN ACCORDANCE WITH CITY OF WILLITS STANDARD 511 HAVING A TAMPER SWITCH AS REQUIRED BY THE CITY OF WILLITS FIRE DEPARTMENT AND A 1-INCH PVC CONDUIT FROM THE DOUBLE DETECTOR CHECK TO THE MECHANICAL CONTROL ROOM TO FACILITATE THE OPERATION OF THE TAMPER SWITCH.
8. 4-INCH DOMESTIC WATER SERVICE WITH A 4-INCH METER IN ACCORDANCE WITH CITY OF WILLITS STANDARD 507 AND 4-INCH REDUCED PRESSURE BACKFLOW PREVENTION DEVICE WITH FROST PROTECTION BLANKET FOR THE DOMESTIC WATER SERVICE IN ACCORDANCE WITH CITY OF WILLITS STANDARD 510.
9. 2-INCH IRRIGATION WATER SERVICE WITH A 2-INCH METER IN ACCORDANCE WITH CITY OF WILLITS STANDARD 505 AND 2-INCH REDUCED PRESSURE BACKFLOW PREVENTION DEVICE WITH FROST PROTECTION BLANKET FOR THE IRRIGATION WATER SERVICE IN ACCORDANCE WITH CITY OF WILLITS STANDARD 510. REFER TO THE LANDSCAPE DRAWINGS FOR THE CONTINUATION OF THIS UTILITY.
10. COMBINATION WATER SERVICE IN ACCORDANCE WITH CITY OF WILLITS STANDARD 513 HAVING A 4-INCH MULTI-SERVICE MANIFOLD.
11. INSTALL TYPE 'E' PEDESTRIAN CURB RAMP IN ACCORDANCE WITH CITY OF WILLITS STANDARD 209.
12. INSTALL PEDESTRIAN RAMP TRUNCATED DOMES AT SIDEWALK END IN ACCORDANCE WITH CITY OF WILLITS STANDARD 209.

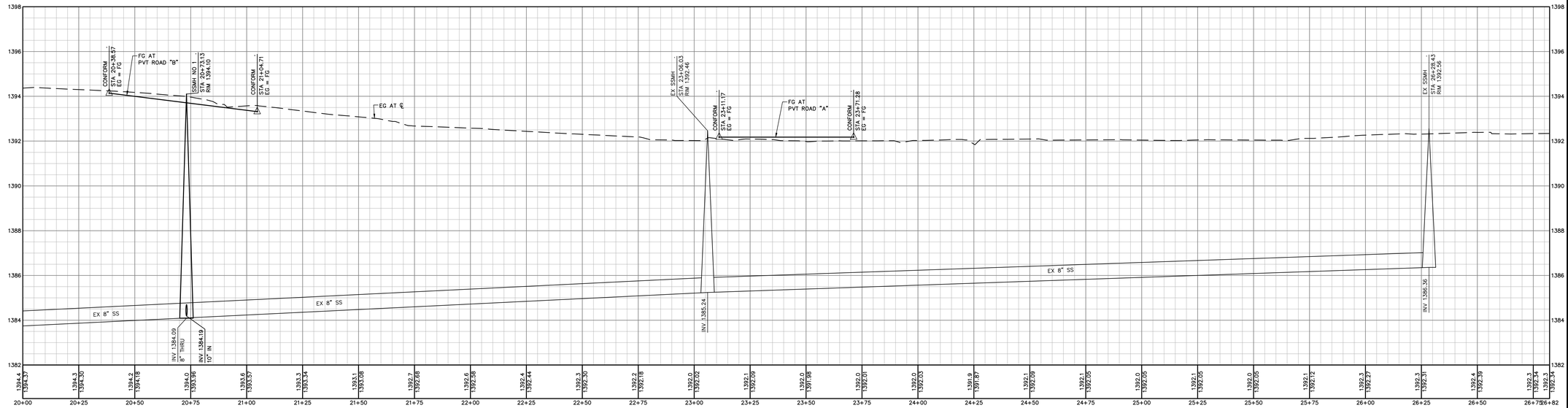

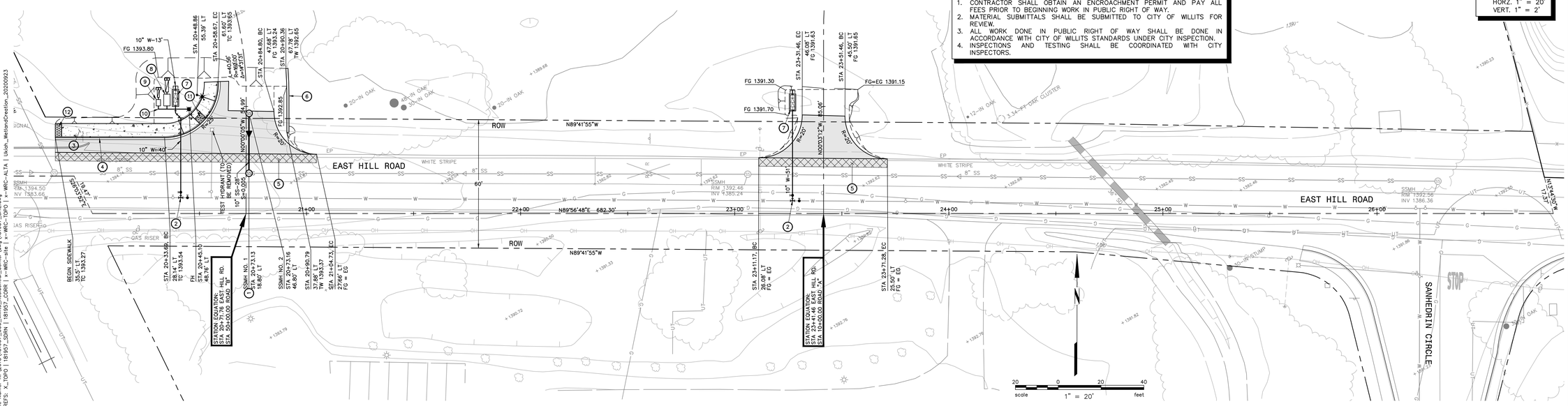

WORK IN PUBLIC RIGHT OF WAY

1. CONTRACTOR SHALL OBTAIN AN ENCROACHMENT PERMIT AND PAY ALL FEES PRIOR TO BEGINNING WORK IN PUBLIC RIGHT OF WAY.
2. MATERIAL SUBMITTALS SHALL BE SUBMITTED TO CITY OF WILLITS FOR REVIEW.
3. ALL WORK DONE IN PUBLIC RIGHT OF WAY SHALL BE DONE IN ACCORDANCE WITH CITY OF WILLITS STANDARDS UNDER CITY INSPECTION.
4. INSPECTIONS AND TESTING SHALL BE COORDINATED WITH CITY INSPECTORS.

IDENTIFICATION STAMP
DIV. OF THE STATE ARCHITECT
APP: 02-118630 INC:
REVIEWED FOR
SS ☐ FLS ☐ ACS ☑
DATE: 04/13/2021

OFFICE OF THE STATE FIRE MARSHAL
APPROVED FIRE AND PANIC ONLY
Approval of this plan does not authorize or approve any omission or deviation from applicable regulations. Final approval is subject to field inspection. One set of approved plans shall be available on the project site at all times.
PERMIT NO. 20-N-2332-CP
REVIEWED BY: LEO CATAYLO, OSFM
DATE: 4 / /2021

GENERAL SERVICES
Department of General Services
State of California
Real Estate Services Division
Project Management & Development Branch
707 Third Street, Suite 4-105
West Sacramento, California 95605

NICHOLS MELBURG & ROSSETTO
ARCHITECTS + ENGINEERS
300 Knollcrest Drive
Redding, CA. 96002
(530) 222-3300 (530) 222-3538 FAX
http://www.nmrdesign.com

Copyright © 2021
All ideas, designs, arrangements and plans indicated or represented by this drawing are owned by, and the property of, NICHOLS, MELBURG and ROSSETTO and were created, evolved and developed for use on, and in conjunction with, the specified project. None of such ideas, designs, arrangements or plans shall be used by, or disclosed to any person, firm or corporation for any purpose whatsoever without the written permission of NICHOLS, MELBURG and ROSSETTO.

LICENSE STAMPS

REGISTERED PROFESSIONAL ENGINEER
GREGORY H. JENNINGS
No. C-68337
CIVIL
STATE OF CALIFORNIA
3/25/2021

CONSULTANT

BKF
200 4th STREET
SUITE 300
SANTA ROSA, CA 95401
(707) 583-8500
www.bkf.com

DRAWING STATUS

CONSTRUCTION DOCUMENTS

ISSUE

No.	Date	Description
1	10/22/2020	INITIAL PLAN REVIEW
2	01/08/2021	AGENCY RESUBMITTAL
3	03/22/2021	AGENCY RESUBMITTAL

If drawing is not 30" x 42" it is a reduced print

PROJECT

RESIDENTIAL CENTER, UKIAH: REPLACEMENT OF EXISTING RESIDENTIAL CENTER

440 EAST HILL ROAD
WILLITS, CALIFORNIA, 95490
MENDOCINO COUNTY
CALIFORNIA CONSERVATION CORPS

Supervisor	Designed	Drawn
RFC	GHJ	BRL

DSA Application No.
02-118630

SHEET TITLE

PLAN & PROFILE
EAST HILL ROAD

DGS Project Number
0000000000001826

NMR Project Number
18-6456

Reference North

Sheet Scale
AS SHOWN

Sheet Number
C2.00

ISSUE DATE
July 9, 2021

Login Name: tlpl
Plot Date: March 25, 2021 - 12:20 pm
File Name: K:\2018\181957_CCC_Willits_Residential_Center\dwg\181957_SITE.dwg
XREFS: A_OPQ | 181957_CSMH | 181957_LOGH | x-WHC-site | x-WHC-ALTA | Ukiah_WetlandDelineation_20200923

KEYNOTES

(11) CONFORM TO EXISTING SURFACE ELEVATION IN A MANNER WHICH GENERATES A UNIFORM TRANSITION BETWEEN SURFACES AND DOES NOT IMPEDE DRAINAGE.

(13) RETAINING WALL. REFER TO THE ARCHITECTURAL DRAWINGS. BLOCK OUT THE TOP OF WALL AT LOCATIONS APPROVED BY THE ARCHITECT AND OWNER AND IN A MANNER WHICH AVOIDS UTILITIES WITHIN THE WALL TO ALLOW STORM WATER TO PASS OVER THE WALL.

(16) APPROXIMATE LIMIT OF GRADING.

(23) FIRE HYDRANT AND LATERAL ASSEMBLY IN ACCORDANCE WITH CITY OF WILLITS STANDARD 502.

(24) GATE VALVE IN ACCORDANCE WITH CITY OF WILLITS STANDARD 501.

(25) SCHEDULE 40 PVC PIPE UTILITY CHASE HAVING A MINIMUM OF 18-INCHES OF COVER WITH TEMPORARY CAPS AT BOTH ENDS TO FACILITATE SITE IRRIGATION. REFER TO THE LANDSCAPE DRAWINGS TO COORDINATE CHASE LOCATIONS AND SIZES.

(FD) INSTALL FIRE DEPARTMENT CONNECTION (FDC). SEE DETAIL FD, SHEET C6.02

SCALE:
HORZ. 1" = 20'
VERT. 1" = 2'

REFER TO SHEET C3.01 FOR GRADING CONTINUATION AND SHEET C4.01 FOR UTILITY CORDINATION OUTSIDE OF ROAD "A"

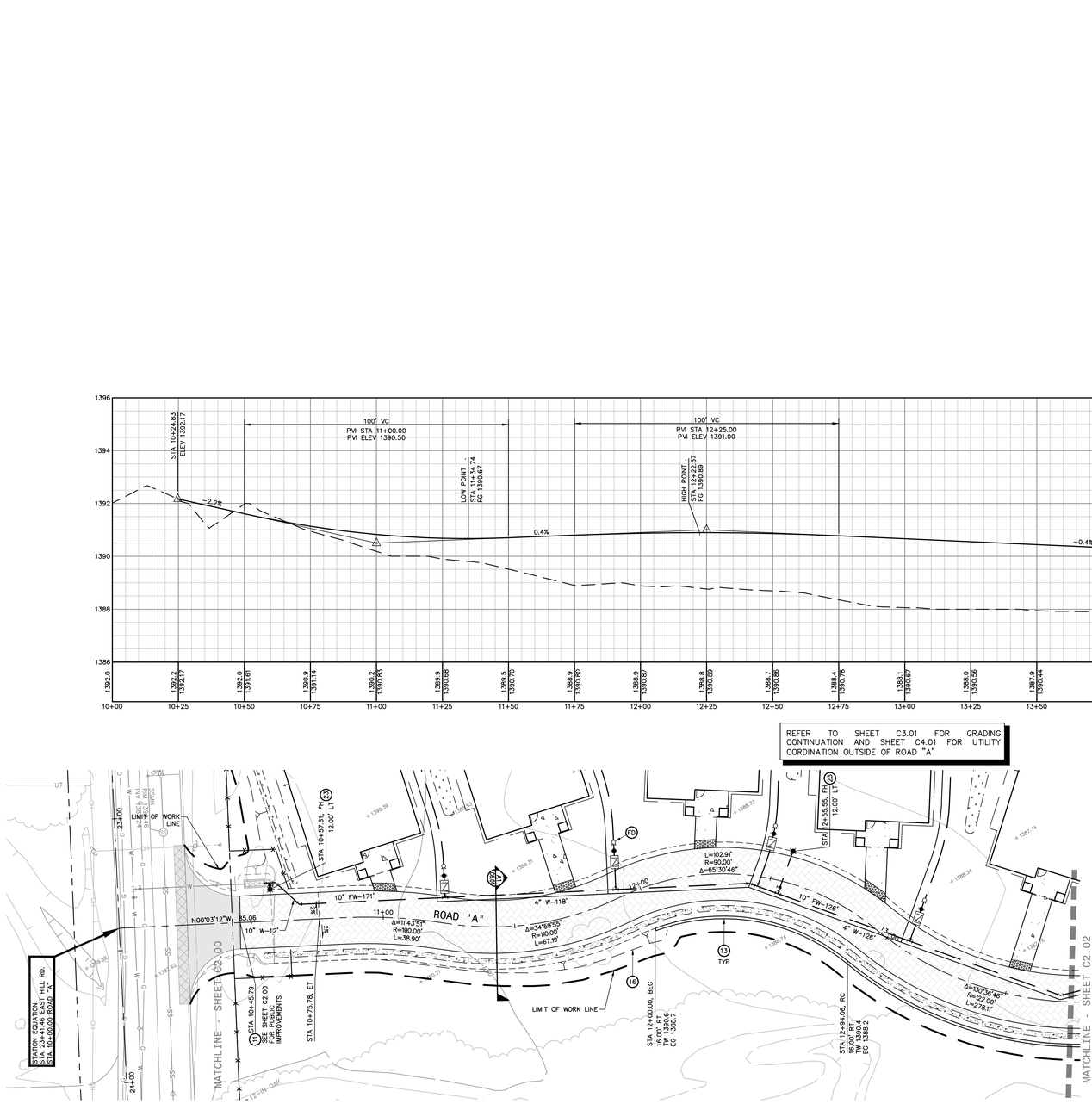

20 0 20 40
scale 1" = 20' feet

IDENTIFICATION STAMP
DIV. OF THE STATE ARCHITECT
APP: 02-118630 INC:
REVIEWED FOR
SS ☐ FLS ☐ ACS ☑
DATE: 04/13/2021

OFFICE OF THE STATE FIRE MARSHAL
APPROVED FIRE AND PANIC ONLY
Approval of this plan does not authorize or approve any omission or deviation from applicable regulations. Final approval is subject to field inspection. One set of approved plans shall be available on the project site at all times.
PERMIT NO: 20-N-2332-CP
REVIEWED BY: LEO CATAYLO, OSFM
DATE: 4 / /2021

GENERAL SERVICES
Department of General Services
State of California
Real Estate Services Division
Project Management & Development Branch
707 Third Street, Suite 4-105
West Sacramento, California 95605

NICHOLS MELBURG & ROSSETTO
ARCHITECTS + ENGINEERS
300 Knollcrest Drive
Redding, CA. 96002
(530) 222-3300 (530) 222-3538 FAX
http://www.nmrdesign.com

Copyright © 2021
All ideas, designs, arrangements and plans indicated or represented by this drawing are owned by, and the property of, NICHOLS, MELBURG and ROSSETTO and were created, evolved and developed for use on, and in conjunction with, the specified project. None of such ideas, designs, arrangements or plans shall be used by, or disclosed to any person, firm or corporation for any purpose whatsoever without the written permission of NICHOLS, MELBURG and ROSSETTO.

LICENSE STAMPS

REGISTERED PROFESSIONAL ENGINEER
GREGORY H. JENNINGS
No. C-68337
CIVIL
STATE OF CALIFORNIA
3/25/2021

CONSULTANT

BKF
200 4th STREET
SUITE 300
SANTA ROSA, CA 95401
(707) 583-8500
www.bkf.com

DRAWING STATUS

CONSTRUCTION DOCUMENTS

ISSUE

No.	Date	Description
1	10/22/2020	INITIAL PLAN REVIEW
2	01/08/2021	AGENCY RESUBMITTAL
3	03/22/2021	AGENCY RESUBMITTAL

If drawing is not 30" x 42" it is a reduced print

PROJECT

RESIDENTIAL CENTER, UKIAH: REPLACEMENT OF EXISTING RESIDENTIAL CENTER

440 EAST HILL ROAD
WILLITS, CALIFORNIA, 95490
MENDOCINO COUNTY
CALIFORNIA CONSERVATION CORPS

Supervisor	Designed	Drawn
RFC	GHJ	BRL

DSA Application No.
02-118630

SHEET TITLE

PLAN & PROFILE
ROAD "A"

DGS Project Number	NMR Project Number
0000000000001826	18-6456

Reference North: NORTH
Sheet Scale: AS SHOWN
Sheet Number: C2.01

ISSUE DATE

July 9, 2021

Login Name: tjrt
Plot Date: March 19, 2021 - 5:45 pm
File Name: K:\2018\181957_CC_Willits_Residential_Center\dwg\181957_SITE.dwg
XREFS: N_GRID | 181957_GRID | 181957_CORR | x-WRC-site | x-WRC-TOPO | x-WRC--ALTA | Ukiah_WetlandDelineation_20200923

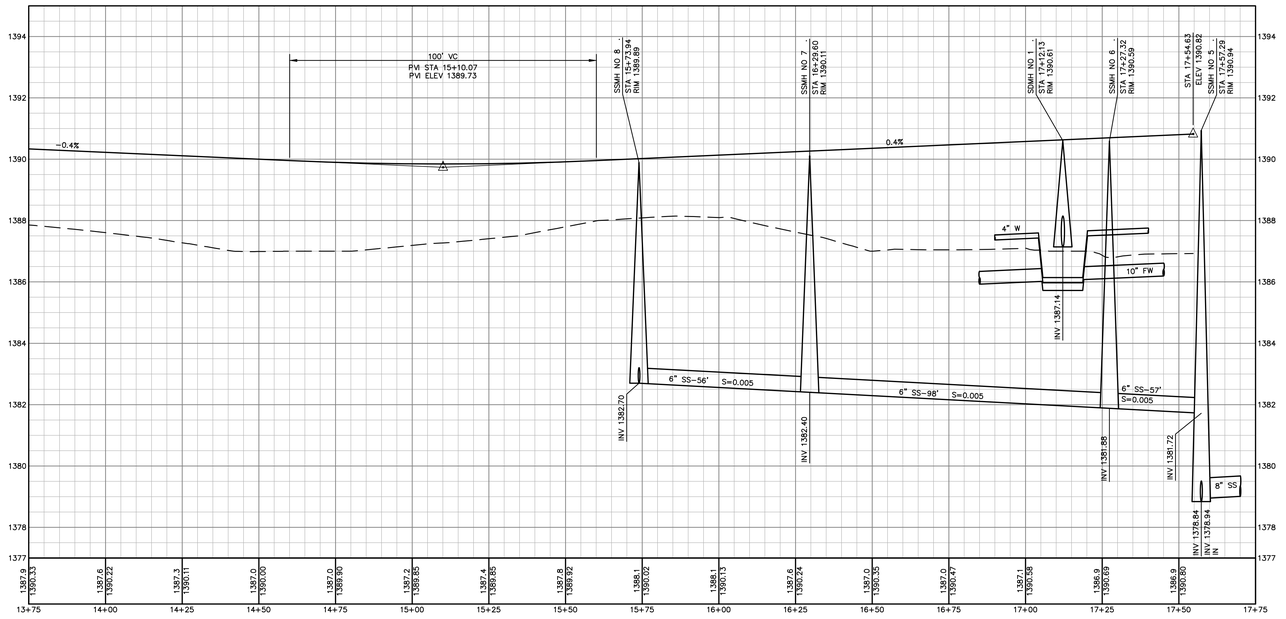

SCALE:
HORZ. 1" = 20'
VERT. 1" = 2'

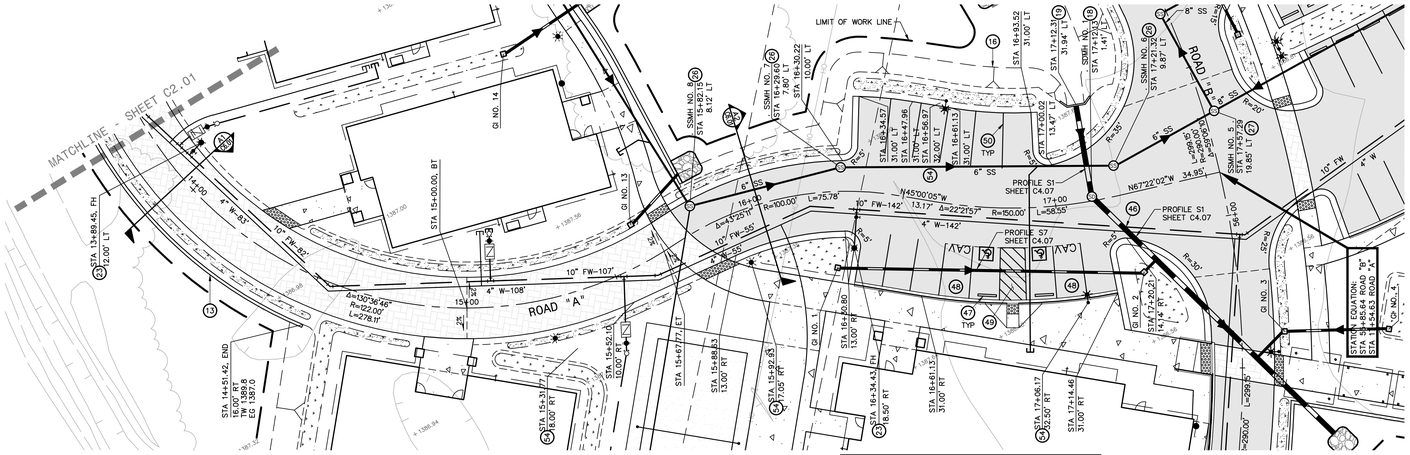

REFER TO SHEET C3.02 FOR GRADING CONTINUATION AND SHEET C4.02 FOR UTILITY CORDINATION OUTSIDE OF ROAD "A"

REFER TO SHEET C3.03 FOR GRADING CONTINUATION AND SHEET C4.03 FOR UTILITY CORDINATION OUTSIDE OF ROAD "A"

KEYNOTES

(13) RETAINING WALL. REFER TO THE ARCHITECTURAL DRAWINGS. BLOCK OUT THE TOP OF WALL AT LOCATIONS APPROVED BY THE ARCHITECT AND OWNER AND IN A MANNER WHICH AVOIDS UTILITIES WITHIN THE WALL TO ALLOW STORM WATER TO PASS OVER THE WALL.

(16) APPROXIMATE LIMIT OF GRADING.

(18) STORM DRAIN MANHOLE IN ACCORDANCE WITH CITY OF WILLITS STANDARD 400 HAVING A TRAFFIC RATED FRAME AND COVER IN ACCORDANCE WITH CITY OF WILLITS STANDARD 401.

(19) HEADWALL IN ACCORDANCE WITH CALTRANS 2018 STANDARD PLAN D89.

(23) FIRE HYDRANT AND LATERAL ASSEMBLY IN ACCORDANCE WITH CITY OF WILLITS STANDARD 502.

(24) GATE VALVE IN ACCORDANCE WITH CITY OF WILLITS STANDARD 501.

(25) SCHEDULE 40 PVC PIPE UTILITY CHASE HAVING A MINIMUM OF 18-INCHES OF COVER WITH TEMPORARY CAPS AT BOTH ENDS TO FACILITATE SITE IRRIGATION. REFER TO THE LANDSCAPE DRAWINGS TO COORDINATE CHASE LOCATIONS AND SIZES.

(26) SANITARY SEWER MANHOLE IN ACCORDANCE WITH CITY OF WILLITS STANDARD 301 HAVING A TRAFFIC RATED FRAME AND COVER IN ACCORDANCE WITH CITY OF WILLITS STANDARD 303.

(27) SANITARY SEWER DROP MANHOLE IN ACCORDANCE WITH CITY OF WILLITS STANDARD 304 HAVING A TRAFFIC RATED FRAME AND COVER IN ACCORDANCE WITH CITY OF WILLITS STANDARD 301.

(41) PROVIDE FELT EXPANSION JOINT MATERIAL BETWEEN UTILITIES WHERE CLEARANCE IS LESS THAN 6-INCHES.

(43) THIS UTILITY HAS BEEN SHOWN FOR REFERENCE AND COORDINATION PURPOSES ONLY. REFER TO THE JOINT TRENCH / ELECTRICAL DRAWINGS.

(46) WATER MAIN LOWERING IN ACCORDANCE WITH CITY OF WILLITS STANDARD 528. PROVIDE A MINIMUM OF 1-FT CLEAR. MECHANICALLY RESTRAIN ALL JOINTS. THRUST BLOCKS ARE NOT ALLOWED.

(47) CONCRETE WHEEL STOP, SET IN EPOXY.

(48) 'CLEAN AIR VEHICLE' PARKING STALL MARKINGS IN ACCORDANCE WITH SECTION 5.106.5.2.1 OF THE 2019 CALIFORNIA GREEN BUILDING CODE.

(49) THERMOPLASTIC DIAGONAL 5-FOOT WIDE SOLID WHITE STRIPING WHERE SHOWN ON PLAN HAVING 4-INCH WIDE STRIPES AT 36-INCHES ON CENTER.

(50) THERMOPLASTIC 4-INCH WIDE SOLID WHITE STRIPING WHERE SHOWN ON PLAN.

(54) SITE LIGHTING. REFER TO THE ELECTRICAL DRAWINGS.

IDENTIFICATION STAMP
DIV. OF THE STATE ARCHITECT
APP: 02-118630 INC:
REVIEWED FOR
SS ☐ FLS ☐ ACS ☑
DATE: 04/13/2021

OFFICE OF THE STATE FIRE MARSHAL
APPROVED FIRE AND PANIC ONLY
Approval of this plan does not authorize or approve any omission or deviation from applicable regulations. Final approval is subject to field inspection. One set of approved plans shall be available on the project site at all times.
PERMIT NO. 20-N-2332-CP
REVIEWED BY: LEO CATAYLO, OSFM
DATE: 4 / /2021

GENERAL SERVICES
Department of General Services
State of California
Real Estate Services Division
Project Management & Development Branch
707 Third Street, Suite 4-105
West Sacramento, California 95605

NICHOLS MELBURG & ROSSETTO
ARCHITECTS + ENGINEERS
300 Knollcrest Drive
Redding, CA. 96002
(530) 222-3300 (530) 222-3538 FAX
http://www.nmrdesign.com

Copyright © 2021
All ideas, designs, arrangements and plans indicated or represented by this drawing are owned by, and the property of, NICHOLS, MELBURG and ROSSETTO and were created, evolved and developed for use on, and in conjunction with, the specified project. None of such ideas, designs, arrangements or plans shall be used by, or disclosed to any person, firm or corporation for any purpose whatsoever without the written permission of NICHOLS, MELBURG and ROSSETTO.

LICENSE STAMPS

REGISTERED PROFESSIONAL ENGINEER
GREGOORY H. JENNINGS
No. C-68337
CIVIL
STATE OF CALIFORNIA
3/25/2021

CONSULTANT

BKF
200 4th STREET
SUITE 300
SANTA ROSA, CA 95401
(707) 583-8500
www.bkf.com

DRAWING STATUS

CONSTRUCTION DOCUMENTS

ISSUE

No.	Date	Description
1	10/22/2020	INITIAL PLAN REVIEW
2	01/08/2021	AGENCY RESUBMITTAL
3	03/22/2021	AGENCY RESUBMITTAL

If drawing is not 30" x 42" it is a reduced print

PROJECT

RESIDENTIAL CENTER, UKIAH: REPLACEMENT OF EXISTING RESIDENTIAL CENTER

440 EAST HILL ROAD
WILLITS, CALIFORNIA, 95490
MENDOCINO COUNTY
CALIFORNIA CONSERVATION CORPS

Supervisor	Designed	Drawn
RFC	GHJ	BRL

DSA Application No.
02-118630

SHEET TITLE

PLAN & PROFILE
ROAD "A"

DGS Project Number	NMR Project Number
0000000000001826	18-6456

Reference North: NORTH
Sheet Scale: AS SHOWN
Sheet Number: C2.02

ISSUE DATE

July 9, 2021

Login Name: lgt
Plot Date: March 19, 2021 - 5:49 pm
File Name: K:\2018\181957_CCC_Willits_Residential_Center\dwg\181957_SITE.dwg
XREFS: K_TOPO | 181957_SIGN | 181957_ZOOM | x-WRC-site | x-WRC-TOPO | x-WRC-ALTA | Ukiah_WetlandDelition_20200923

KEYNOTES

(2) ALL GRADING SHALL CONFORM TO GEOTECHNICAL REPORT PREPARED BY SHN ENGINEERS & GEOLOGISTS ON MAY 2018 REMOVE EXISTING MATERIAL AS REQUIRED TO PROVIDE A LAYER OF GEOSYNTHETIC FABRIC AND A 1-FOOT THICK BLANKET OF CALTRANS CLASS II ROCK SLOPE PROTECTION IN ACCORDANCE WITH CALTRANS 2018 STANDARD SPECIFICATIONS SECTION 72-2. SEE DETAIL SO/C6.02

(11) CONFORM TO EXISTING SURFACE ELEVATION IN A MANNER WHICH GENERATES A UNIFORM TRANSITION BETWEEN SURFACES AND DOES NOT IMPEDE DRAINAGE.

(12) BACKFILL NEW IMPROVEMENTS TO THE LINES AND ELEVATIONS SHOWN WITH SOIL SUITABLE FOR PLANTING IN A MANNER WHICH GENERATES A UNIFORM TRANSITION BETWEEN SURFACES AND PROVIDES POSITIVE DRAINAGE AWAY FROM STRUCTURES. PROVIDE MATERIAL SEPARATION IN ACCORDANCE WITH SECTION 1404.10.1.3 OF THE 2019 CALIFORNIA BUILDING CODE.

(13) RETAINING WALL. REFER TO THE ARCHITECTURAL DRAWINGS. BLOCK OUT THE TOP OF WALL AT LOCATIONS APPROVED BY THE ARCHITECT AND OWNER AND IN A MANNER WHICH AVOIDS UTILITIES WITHIN THE WALL TO ALLOW STORM WATER TO PASS OVER THE WALL.

(15) COORDINATE WITH THE OWNER OF THIS UTILITY TO HAVE THEM HOLD THE UTILITY POLE IN PLACE WHILE CONDUCTING IMPROVEMENTS IN THIS AREA.

(16) APPROXIMATE LIMIT OF GRADING.

(19) HEADWALL IN ACCORDANCE WITH CALTRANS 2018 STANDARD PLAN D89.

(20) INSTALL STORM DRAIN OUTFALL (SO). REFER TO DETAIL SO ON SHEET C6.02.

(21) CONNECT TO EXISTING UTILITY IN A MANNER WHICH PROVIDES A PERMANENT WATER TIGHT SEAL.

(23) FIRE HYDRANT AND LATERAL ASSEMBLY IN ACCORDANCE WITH CITY OF WILLITS STANDARD 502.

(24) GATE VALVE IN ACCORDANCE WITH CITY OF WILLITS STANDARD 501.

(25) SCHEDULE 40 PVC PIPE UTILITY CHASE HAVING A MINIMUM OF 18-INCHES OF COVER WITH TEMPORARY CAPS AT BOTH ENDS TO FACILITATE SITE IRRIGATION. REFER TO THE LANDSCAPE DRAWINGS TO COORDINATE CHASE LOCATIONS AND SIZES.

(28) PERMANENT MAINLINE CLEANOUT IN ACCORDANCE WITH CITY OF WILLITS STANDARD 307.

(40) WATER MAIN FULL SIZE BLOW OFF IN ACCORDANCE WITH CITY OF WILLITS STANDARD 516.

(41) PROVIDE FELT EXPANSION JOINT MATERIAL BETWEEN UTILITIES WHERE CLEARANCE IS LESS THAN 6-INCHES.

(43) THIS UTILITY HAS BEEN SHOWN FOR REFERENCE AND COORDINATION PURPOSES ONLY. REFER TO THE JOINT TRENCH / ELECTRICAL DRAWINGS.

(50) THERMOPLASTIC 4-INCH WIDE SOLID WHITE STRIPING WHERE SHOWN ON PLAN.

(51) 10-FOOT LONG DIRECTIONAL ARROW WITH SOLID WHITE THERMOPLASTIC PAINT.

(54) SITE LIGHTING. REFER TO THE ELECTRICAL DRAWINGS.

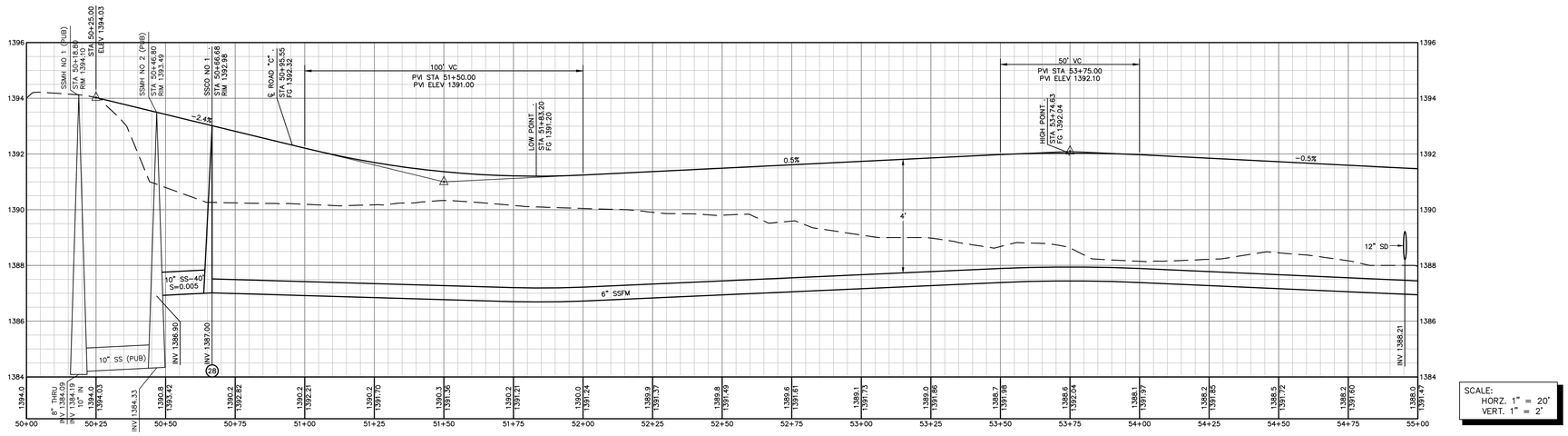

SCALE:
HORZ. 1" = 20'
VERT. 1" = 2'

REFER TO SHEET C3.03 FOR GRADING CONTINUATION AND SHEET C4.03 FOR UTILITY CORDINATION OUTSIDE OF ROAD "B"

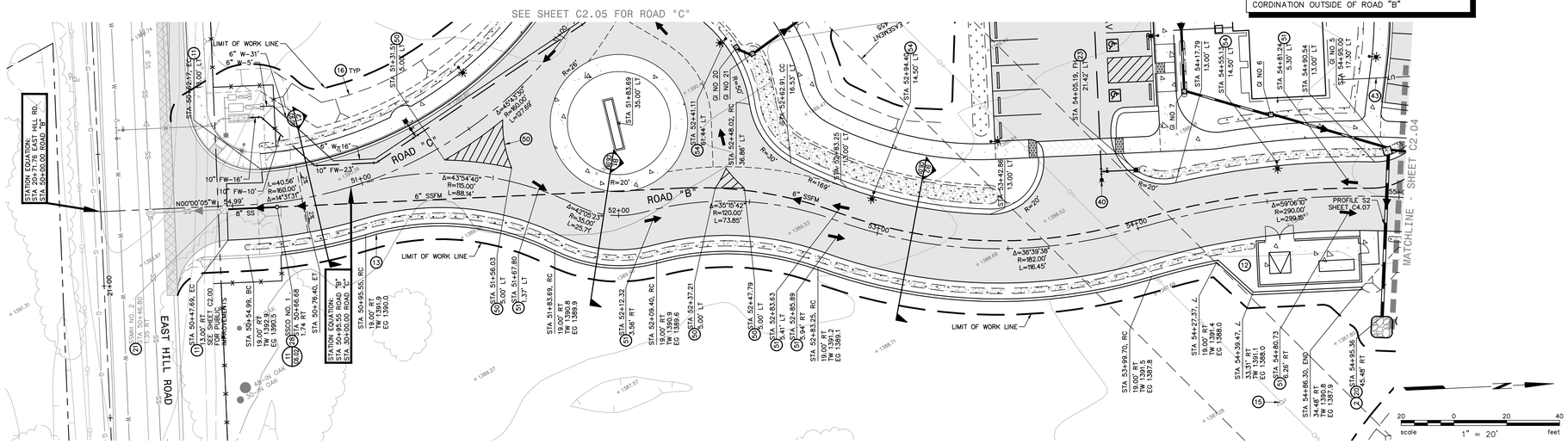

Login Name: lgt
Plot Date: March 25, 2021 - 12:36 pm
File Name: K:\2018\181957_CC_Willits_Residential_Center\dwg\181957_SITE.dwg
XREFS: XL_TOPO | 181957_SSMH | 181957_SSMH | x-WRC-site | x-WRC-TOPO | x-WRC-ALTA | Ukiah_WetlandDelineation_20200923

IDENTIFICATION STAMP
DIV. OF THE STATE ARCHITECT
APP: 02-118630 INC:
REVIEWED FOR
SS ☐ FLS ☐ ACS ☑
DATE: 04/13/2021

OFFICE OF THE STATE FIRE MARSHAL
APPROVED FIRE AND PANIC ONLY
Approval of this plan does not authorize or approve any omission or deviation from applicable regulations. Final approval is subject to field inspection. One set of approved plans shall be available on the project site at all times.
PERMIT NO. 20-N-2332-CP
REVIEWED BY: LEO CATAYLO, OSFM
DATE: 4 / /2021

DGS GENERAL SERVICES
Department of General Services
State of California
Real Estate Services Division
Project Management & Development Branch
707 Third Street, Suite 4-105
West Sacramento, California 95605

NICHOLS MELBURG & ROSSETTO
ARCHITECTS + ENGINEERS
300 Knollcrest Drive
Redding, CA. 96002
(530) 222-3300 (530) 222-3538 FAX
http://www.nmrdesign.com

Copyright © 2021
All ideas, designs, arrangements and plans indicated or represented by this drawing are owned by, and the property of, NICHOLS, MELBURG and ROSSETTO and were created, evolved and developed for use on, and in conjunction with, the specified project. None of such ideas, designs, arrangements or plans shall be used by, or disclosed to any person, firm or corporation for any purpose whatsoever without the written permission of NICHOLS, MELBURG and ROSSETTO.

LICENSE STAMPS

REGISTERED PROFESSIONAL ENGINEER
GREGOORY H. JENNINGS
No. C-68337
CIVIL
STATE OF CALIFORNIA
3/25/2021

CONSULTANT

BKF
200 4th STREET
SUITE 300
SANTA ROSA, CA 95401
(707) 583-8500
www.bkf.com

DRAWING STATUS

CONSTRUCTION DOCUMENTS

ISSUE

No.	Date	Description
1	10/22/2020	INITIAL PLAN REVIEW
2	01/08/2021	AGENCY RESUBMITTAL
3	03/22/2021	AGENCY RESUBMITTAL

If drawing is not 30" x 42" it is a reduced print

PROJECT

RESIDENTIAL CENTER, UKIAH: REPLACEMENT OF EXISTING RESIDENTIAL CENTER

440 EAST HILL ROAD
WILLITS, CALIFORNIA, 95490
MENDOCINO COUNTY
CALIFORNIA CONSERVATION CORPS

Supervisor	Designed	Drawn
RFC	GHJ	BRL

DSA Application No,
02-118630

SHEET TITLE

PLAN & PROFILE ROAD "B"

DGS Project Number	NMR Project Number
0000000000001826	18-6456

Reference North: NORTH
Sheet Scale: AS SHOWN
Sheet Number: C2.03

ISSUE DATE

July 9, 2021

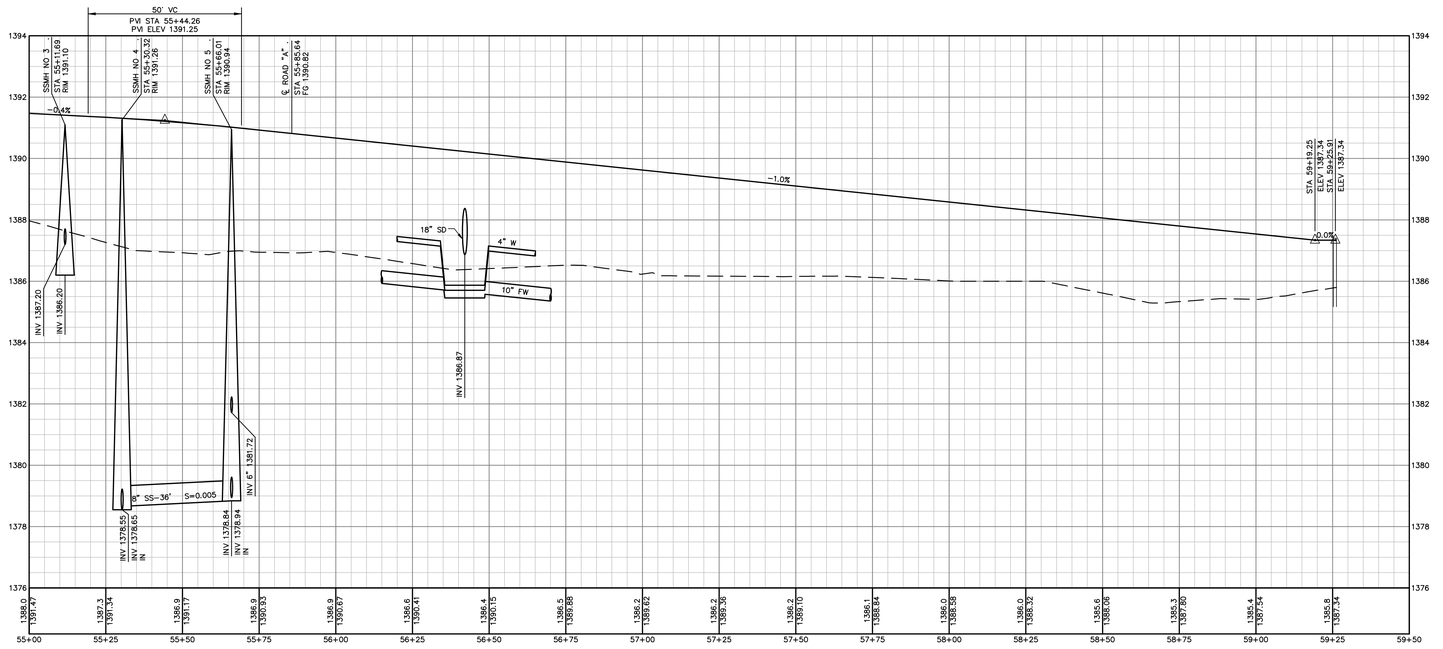

SCALE:
HORZ. 1" = 20'
VERT. 1" = 2'

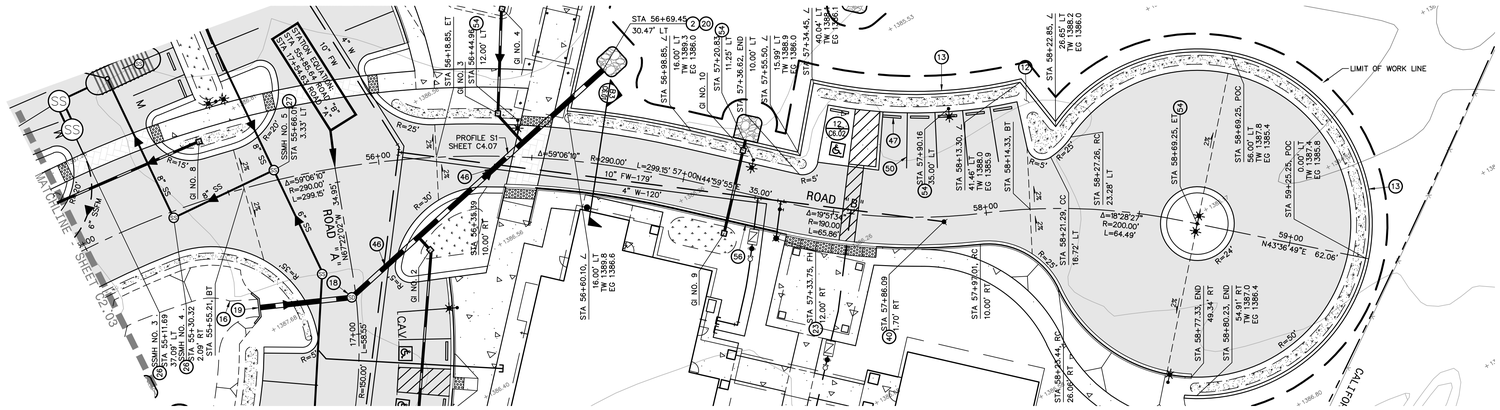

REFER TO SHEET C3.02 FOR GRADING CONTINUATION AND SHEET C4.02 FOR UTILITY CORDINATION OUTSIDE OF ROAD "B"

KEYNOTES

(2) ALL GRADING SHALL CONFORM TO GEOTECHNICAL REPORT PREPARED BY SHN ENGINEERS & GEOLOGISTS ON MAY 2018 REMOVE EXISTING MATERIAL AS REQUIRED TO PROVIDE A LAYER OF GEOSYNTHETIC FABRIC AND A 1-FOOT THICK BLANKET OF CALTRANS CLASS II ROCK SLOPE PROTECTION IN ACCORDANCE WITH CALTRANS 2018 STANDARD SPECIFICATIONS SECTION 72-2. SEE DETAIL SO/C6.02

(12) BACKFILL NEW IMPROVEMENTS TO THE LINES AND ELEVATIONS SHOWN WITH SOIL SUITABLE FOR PLANTING IN A MANNER WHICH GENERATES A UNIFORM TRANSITION BETWEEN SURFACES AND PROVIDES POSITIVE DRAINAGE AWAY FROM STRUCTURES. PROVIDE MATERIAL SEPARATION IN ACCORDANCE WITH SECTION 1404.10.1.3 OF THE 2019 CALIFORNIA BUILDING CODE.

(13) RETAINING WALL. REFER TO THE ARCHITECTURAL DRAWINGS. BLOCK OUT THE TOP OF WALL AT LOCATIONS APPROVED BY THE ARCHITECT AND OWNER AND IN A MANNER WHICH AVOIDS UTILITIES WITHIN THE WALL TO ALLOW STORM WATER TO PASS OVER THE WALL.

(16) APPROXIMATE LIMIT OF GRADING.

(18) STORM DRAIN MANHOLE IN ACCORDANCE WITH CITY OF WILLITS STANDARD 400 HAVING A TRAFFIC RATED FRAME AND COVER IN ACCORDANCE WITH CITY OF WILLITS STANDARD 401.

(19) HEADWALL IN ACCORDANCE WITH CALTRANS 2018 STANDARD PLAN D89.

(20) INSTALL STORM DRAIN OUTFALL (SO). REFER TO DETAIL SO ON SHEET C6.02.

(23) FIRE HYDRANT AND LATERAL ASSEMBLY IN ACCORDANCE WITH CITY OF WILLITS STANDARD 502.

(24) GATE VALVE IN ACCORDANCE WITH CITY OF WILLITS STANDARD 501.

(25) SCHEDULE 40 PVC PIPE UTILITY CHASE HAVING A MINIMUM OF 18-INCHES OF COVER WITH TEMPORARY CAPS AT BOTH ENDS TO FACILITATE SITE IRRIGATION. REFER TO THE LANDSCAPE DRAWINGS TO COORDINATE CHASE LOCATIONS AND SIZES.

(26) SANITARY SEWER MANHOLE IN ACCORDANCE WITH CITY OF WILLITS STANDARD 301 HAVING A TRAFFIC RATED FRAME AND COVER IN ACCORDANCE WITH CITY OF WILLITS STANDARD 303.

(27) SANITARY SEWER DROP MANHOLE IN ACCORDANCE WITH CITY OF WILLITS STANDARD 304 HAVING A TRAFFIC RATED FRAME AND COVER IN ACCORDANCE WITH CITY OF WILLITS STANDARD 301.

(40) WATER MAIN FULL SIZE BLOW OFF IN ACCORDANCE WITH CITY OF WILLITS STANDARD 516.

(41) PROVIDE FELT EXPANSION JOINT MATERIAL BETWEEN UTILITIES WHERE CLEARANCE IS LESS THAN 6-INCHES.

(43) THIS UTILITY HAS BEEN SHOWN FOR REFERENCE AND COORDINATION PURPOSES ONLY. REFER TO THE JOINT TRENCH / ELECTRICAL DRAWINGS.

(46) WATER MAIN LOWERING IN ACCORDANCE WITH CITY OF WILLITS STANDARD 528. PROVIDE A MINIMUM OF 1-FT CLEAR. MECHANICALLY RESTRAIN ALL JOINTS. THRUST BLOCKS ARE NOT ALLOWED.

(47) CONCRETE WHEEL STOP, SET IN EPOXY.

(50) THERMOPLASTIC 4-INCH WIDE SOLID WHITE STRIPING WHERE SHOWN ON PLAN.

(54) SITE LIGHTING. REFER TO THE ELECTRICAL DRAWINGS.

(56) PAINT CURB RED AND ANNOTATE WITH 3-INCH TALL WHITE LETTERS HAVING A 3/4-INCH STROKE WHICH READ "NO PARKING FIRE LANE".

IDENTIFICATION STAMP
DIV. OF THE STATE ARCHITECT
APP: 02-118630 INC:
REVIEWED FOR
SS ☐ FLS ☐ ACS ☑
DATE: 04/13/2021

OFFICE OF THE STATE FIRE MARSHAL
APPROVED FIRE AND PANIC ONLY
Approval of this plan does not authorize or approve any omission or deviation from applicable regulations. Final approval is subject to field inspection. One set of approved plans shall be available on the project site at all times.
PERMIT NO. 20-N-2332-CP
REVIEWED BY: LEO CATAYLO, OSFM
DATE: 4 / /2021

DGS GENERAL SERVICES
Department of General Services
State of California
Real Estate Services Division
Project Management & Development Branch
707 Third Street, Suite 4-105
West Sacramento, California 95605

NICHOLS MELBURG & ROSSETTO
ARCHITECTS + ENGINEERS
300 Knollcrest Drive
Redding, CA. 96002
(530) 222-3300 (530) 222-3538 FAX
http://www.nmrdesign.com

Copyright © 2021
All ideas, designs, arrangements and plans indicated or represented by this drawing are owned by, and the property of, NICHOLS, MELBURG and ROSSETTO and were created, evolved and developed for use on, and in conjunction with, the specified project. None of such ideas, designs, arrangements or plans shall be used by, or disclosed to any person, firm or corporation for any purpose whatsoever without the written permission of NICHOLS, MELBURG and ROSSETTO.

LICENSE STAMPS

REGISTERED PROFESSIONAL ENGINEER
GREGORY H. JENNINGS
No. C-68337
CIVIL
STATE OF CALIFORNIA
3/25/2021

CONSULTANT

BKF
200 4th STREET
SUITE 300
SANTA ROSA, CA 95401
(707) 583-8500
www.bkf.com

DRAWING STATUS

CONSTRUCTION DOCUMENTS

ISSUE

No.	Date	Description
1	10/22/2020	INITIAL PLAN REVIEW
2	01/08/2021	AGENCY RESUBMITTAL
3	03/22/2021	AGENCY RESUBMITTAL

If drawing is not 30" x 42" it is a reduced print

PROJECT

RESIDENTIAL CENTER, UKIAH: REPLACEMENT OF EXISTING RESIDENTIAL CENTER

440 EAST HILL ROAD
WILLITS, CALIFORNIA, 95490
MENDOCINO COUNTY
CALIFORNIA CONSERVATION CORPS

Supervisor	Designed	Drawn
RFC	GHJ	BRL

DSA Application No.
02-118630

SHEET TITLE

PLAN & PROFILE
ROAD "B"

DGS Project Number	NMR Project Number
0000000000001826	18-6456

Reference North: NORTH
Sheet Scale: AS SHOWN
Sheet Number: C2.04

ISSUE DATE

July 9, 2021

Login Name: lgt
Plot Date: March 19, 2021 - 5:58 pm
File Name: K:\2018\181957_CCC_Willits_Residential_Center\dwg\181957_SITE.dwg
XREFS: K_\DPG | 181957_SSMH | 181957_SSMH | x-WRC-site | x-WRC-\DPG | x-WRC-ALTA | Ukiah_WetlandCreation_20200923

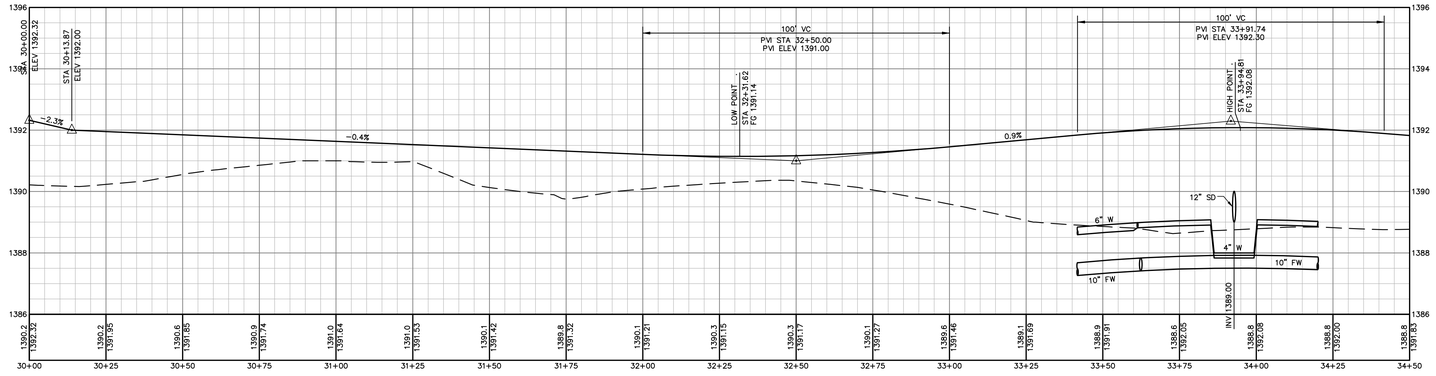

SCALE:
HORZ. 1" = 20'
VERT. 1" = 2'

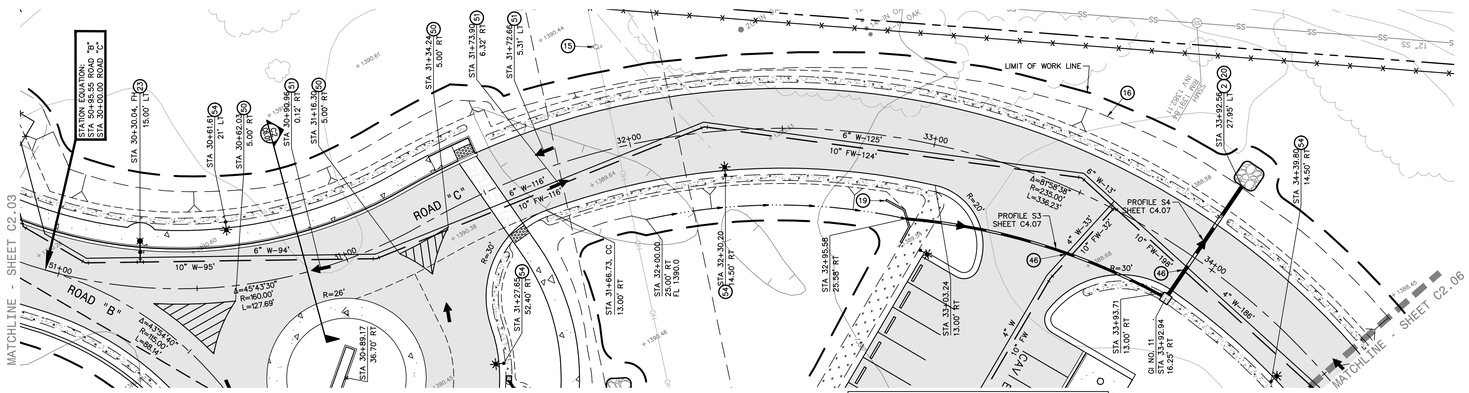

REFER TO SHEET C3.03 FOR GRADING CONTINUATION AND SHEET C4.03 FOR UTILITY CORDINATION OUTSIDE OF ROAD "C"

20 0 20 40
scale 1" = 20' feet

KEYNOTES

(2) ALL GRADING SHALL CONFORM TO GEOTECHNICAL REPORT PREPARED BY SHN ENGINEERS & GEOLOGISTS ON MAY 2018 REMOVE EXISTING MATERIAL AS REQUIRED TO PROVIDE A LAYER OF GEOSYNTHETIC FABRIC AND A 1-FOOT THICK BLANKET OF CALTRANS CLASS II ROCK SLOPE PROTECTION IN ACCORDANCE WITH CALTRANS 2018 STANDARD SPECIFICATIONS SECTION 72-2. SEE DETAIL SO/C6.02

(15) COORDINATE WITH THE OWNER OF THIS UTILITY TO HAVE THEM HOLD THE UTILITY POLE IN PLACE WHILE CONDUCTING IMPROVEMENTS IN THIS AREA.

(16) APPROXIMATE LIMIT OF GRADING.

(19) HEADWALL IN ACCORDANCE WITH CALTRANS 2018 STANDARD PLAN D89.

(20) INSTALL STORM DRAIN OUTFALL (SO). REFER TO DETAIL SO ON SHEET C6.02.

(23) FIRE HYDRANT AND LATERAL ASSEMBLY IN ACCORDANCE WITH CITY OF WILLITS STANDARD 502.

(24) GATE VALVE IN ACCORDANCE WITH CITY OF WILLITS STANDARD 501.

(25) SCHEDULE 40 PVC PIPE UTILITY CHASE HAVING A MINIMUM OF 18-INCHES OF COVER WITH TEMPORARY CAPS AT BOTH ENDS TO FACILITATE SITE IRRIGATION. REFER TO THE LANDSCAPE DRAWINGS TO COORDINATE CHASE LOCATIONS AND SIZES.

(41) PROVIDE FELT EXPANSION JOINT MATERIAL BETWEEN UTILITIES WHERE CLEARANCE IS LESS THAN 6-INCHES.

(43) THIS UTILITY HAS BEEN SHOWN FOR REFERENCE AND COORDINATION PURPOSES ONLY. REFER TO THE JOINT TRENCH / ELECTRICAL DRAWINGS.

(46) WATER MAIN LOWERING IN ACCORDANCE WITH CITY OF WILLITS STANDARD 528. PROVIDE A MINIMUM OF 1-FT CLEAR. MECHANICALLY RESTRAIN ALL JOINTS. THRUST BLOCKS ARE NOT ALLOWED.

(50) THERMOPLASTIC 4-INCH WIDE SOLID WHITE STRIPING WHERE SHOWN ON PLAN.

(51) 10-FOOT LONG DIRECTIONAL ARROW WITH SOLID WHITE THERMOPLASTIC PAINT.

(94) SITE LIGHTING. REFER TO THE ELECTRICAL DRAWINGS.

IDENTIFICATION STAMP
DIV. OF THE STATE ARCHITECT
APP: 02-118630 INC:
REVIEWED FOR
SS ☐ FLS ☐ ACS ☑
DATE: 04/13/2021

OFFICE OF THE STATE FIRE MARSHAL
APPROVED FIRE AND PANIC ONLY
Approval of this plan does not authorize or approve any omission or deviation from applicable regulations. Final approval is subject to field inspection. One set of approved plans shall be available on the project site at all times.
PERMIT NO. 20-N-2332-CP
REVIEWED BY: LEO CATAYLO, OSFM
DATE: 4 / /2021

DGS GENERAL SERVICES
Department of General Services
State of California
Real Estate Services Division
Project Management & Development Branch
707 Third Street, Suite 4-105
West Sacramento, California 95605

NICHOLS MELBURG & ROSSETTO
ARCHITECTS + ENGINEERS
300 Knollcrest Drive
Redding, CA. 96002
(530) 222-3300 (530) 222-3538 FAX
http://www.nmrdesign.com

Copyright © 2021
All ideas, designs, arrangements and plans indicated or represented by this drawing are owned by, and the property of, NICHOLS, MELBURG and ROSSETTO and were created, evolved and developed for use on, and in conjunction with, the specified project. None of such ideas, designs, arrangements or plans shall be used by, or disclosed to any person, firm or corporation for any purpose whatsoever without the written permission of NICHOLS, MELBURG and ROSSETTO.

LICENSE STAMPS

REGISTERED PROFESSIONAL ENGINEER
GREGORY H. JENNINGS
No. C-68337
CIVIL
STATE OF CALIFORNIA
3/25/2021

CONSULTANT

BKF
200 4th STREET
SUITE 300
SANTA ROSA, CA 95401
(707) 583-8500
www.bkf.com

DRAWING STATUS

CONSTRUCTION DOCUMENTS

ISSUE

No.	Date	Description
1	10/22/2020	INITIAL PLAN REVIEW
2	01/08/2021	AGENCY RESUBMITTAL
3	03/22/2021	AGENCY RESUBMITTAL

If drawing is not 30" x 42" it is a reduced print

PROJECT

RESIDENTIAL CENTER, UKIAH: REPLACEMENT OF EXISTING RESIDENTIAL CENTER

440 EAST HILL ROAD
WILLITS, CALIFORNIA, 95490
MENDOCINO COUNTY
CALIFORNIA CONSERVATION CORPS

Supervisor	Designed	Drawn
RFC	GHJ	BRL

DSA Application No.
02-118630

SHEET TITLE

PLAN & PROFILE
ROAD "C"

DGS Project Number	NMR Project Number
0000000000001826	18-6456

Reference North: NORTH
Sheet Scale: AS SHOWN
Sheet Number: C2.05

ISSUE DATE

July 9, 2021

Login Name: tlpl
Plot Date: March 19, 2021 - 6:02 pm
File Name: K:\2018\181937_CCC_Willits_Residential_Center\Dwg\181937_SITE.dwg
XREFS: A_OPQ | 181937_SOIL | 181937_CORR | x-WRC-Site | x-WRC-1990 | x-WRC-ALTA | Ukiah_WetlandCreation_20200923

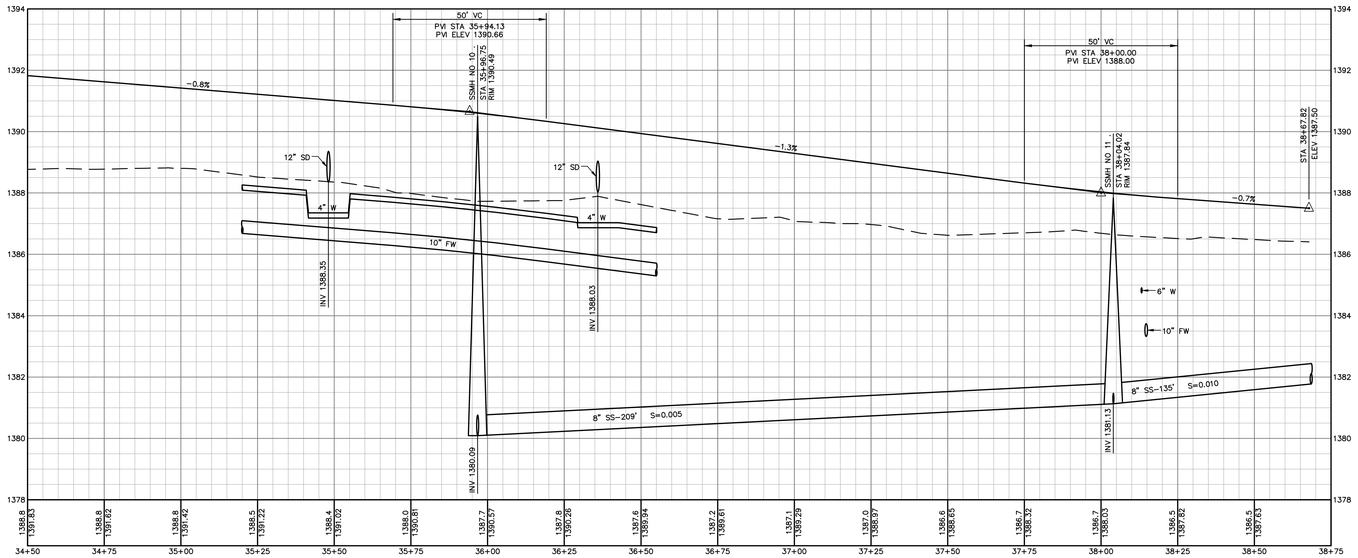

SCALE:
HORZ. 1" = 20'
VERT. 1" = 2'

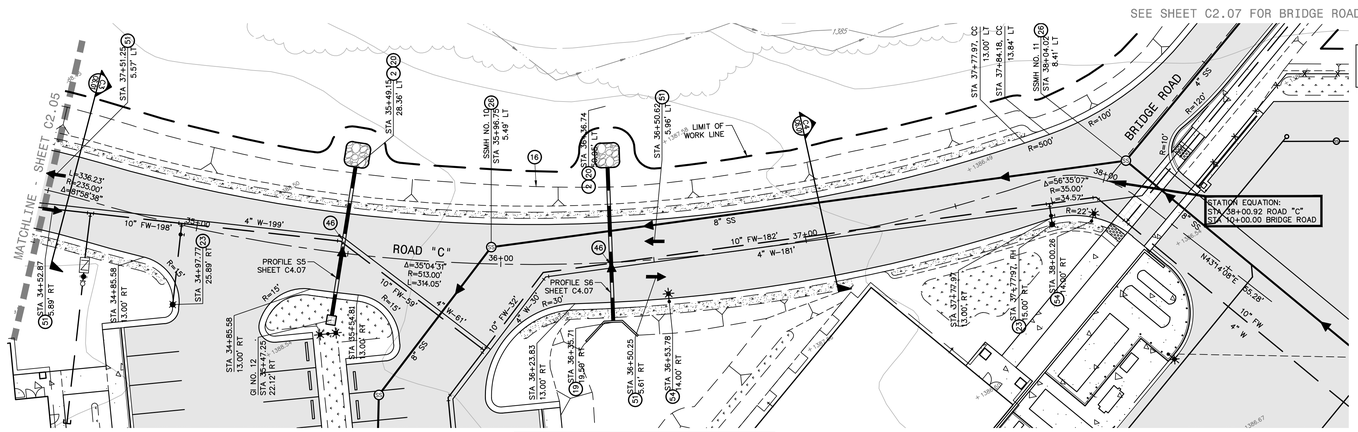

REFER TO SHEET C3.03 FOR GRADING CONTINUATION AND SHEET C4.03 FOR UTILITY CORDINATION OUTSIDE OF ROAD "C"

REFER TO SHEET C3.04 FOR GRADING CONTINUATION AND SHEET C4.04 FOR UTILITY CORDINATION OUTSIDE OF ROAD "C"

KEYNOTES

(2) ALL GRADING SHALL CONFORM TO GEOTECHNICAL REPORT PREPARED BY SHN ENGINEERS & GEOLOGISTS ON MAY 2018 REMOVE EXISTING MATERIAL AS REQUIRED TO PROVIDE A LAYER OF GEOSYNTHETIC FABRIC AND A 1-FOOT THICK BLANKET OF CALTRANS CLASS II ROCK SLOPE PROTECTION IN ACCORDANCE WITH CALTRANS 2018 STANDARD SPECIFICATIONS SECTION 72-2. SEE DETAIL SO/C6.02

(16) APPROXIMATE LIMIT OF GRADING.

(19) HEADWALL IN ACCORDANCE WITH CALTRANS 2018 STANDARD PLAN D89.

(20) INSTALL STORM DRAIN OUTFALL (SO). REFER TO DETAIL SO ON SHEET C6.02.

(23) FIRE HYDRANT AND LATERAL ASSEMBLY IN ACCORDANCE WITH CITY OF WILLITS STANDARD 502.

(24) GATE VALVE IN ACCORDANCE WITH CITY OF WILLITS STANDARD 501.

(25) SCHEDULE 40 PVC PIPE UTILITY CHASE HAVING A MINIMUM OF 18-INCHES OF COVER WITH TEMPORARY CAPS AT BOTH ENDS TO FACILITATE SITE IRRIGATION. REFER TO THE LANDSCAPE DRAWINGS TO COORDINATE CHASE LOCATIONS AND SIZES.

(26) SANITARY SEWER MANHOLE IN ACCORDANCE WITH CITY OF WILLITS STANDARD 301 HAVING A TRAFFIC RATED FRAME AND COVER IN ACCORDANCE WITH CITY OF WILLITS STANDARD 303.

(41) PROVIDE FELT EXPANSION JOINT MATERIAL BETWEEN UTILITIES WHERE CLEARANCE IS LESS THAN 6-INCHES.

(43) THIS UTILITY HAS BEEN SHOWN FOR REFERENCE AND COORDINATION PURPOSES ONLY. REFER TO THE JOINT TRENCH / ELECTRICAL DRAWINGS.

(46) WATER MAIN LOWERING IN ACCORDANCE WITH CITY OF WILLITS STANDARD 528. PROVIDE A MINIMUM OF 1-FT CLEAR. MECHANICALLY RESTRAIN ALL JOINTS. THRUST BLOCKS ARE NOT ALLOWED.

(51) 10-FOOT LONG DIRECTIONAL ARROW WITH SOLID WHITE THERMOPLASTIC PAINT.

(54) SITE LIGHTING. REFER TO THE ELECTRICAL DRAWINGS.

IDENTIFICATION STAMP
DIV. OF THE STATE ARCHITECT
APP: 02-118630 INC:
REVIEWED FOR
SS ☐ FLS ☐ ACS ☑
DATE: 04/13/2021

OFFICE OF THE STATE FIRE MARSHAL
APPROVED FIRE AND PANIC ONLY
Approval of this plan does not authorize or approve any omission or deviation from applicable regulations. Final approval is subject to field inspection. One set of approved plans shall be available on the project site at all times.
PERMIT NO. 20-N-2332-CP
REVIEWED BY: LEO CATAYLO, OSFM
DATE: 4 / /2021

GENERAL SERVICES
Department of General Services
State of California
Real Estate Services Division
Project Management & Development Branch
707 Third Street, Suite 4-105
West Sacramento, California 95605

NICHOLS MELBURG & ROSSETTO
ARCHITECTS + ENGINEERS
300 Knollcrest Drive
Redding, CA. 96002
(530) 222-3300 (530) 222-3538 FAX
http://www.nmrdesign.com

Copyright © 2021
All ideas, designs, arrangements and plans indicated or represented by this drawing are owned by, and the property of, NICHOLS, MELBURG and ROSSETTO and were created, evolved and developed for use on, and in conjunction with, the specified project. None of such ideas, designs, arrangements or plans shall be used by, or disclosed to any person, firm or corporation for any purpose whatsoever without the written permission of NICHOLS, MELBURG and ROSSETTO.

LICENSE STAMPS

REGISTERED PROFESSIONAL ENGINEER
GREGORY H. JENNINGS
No. C-68337
CIVIL
STATE OF CALIFORNIA
3/25/2021

CONSULTANT

BKF
200 4th STREET
SUITE 300
SANTA ROSA, CA 95401
(707) 583-8500
www.bkf.com

DRAWING STATUS

CONSTRUCTION DOCUMENTS

ISSUE

No.	Date	Description
1	10/22/2020	INITIAL PLAN REVIEW
2	01/08/2021	AGENCY RESUBMITTAL
3	03/22/2021	AGENCY RESUBMITTAL

If drawing is not 30" x 42" it is a reduced print

PROJECT

RESIDENTIAL CENTER, UKIAH: REPLACEMENT OF EXISTING RESIDENTIAL CENTER

440 EAST HILL ROAD
WILLITS, CALIFORNIA, 95490
MENDOCINO COUNTY
CALIFORNIA CONSERVATION CORPS

Supervisor	Designed	Drawn
RFC	GHJ	BRL

DSA Application No.
02-118630

SHEET TITLE

PLAN & PROFILE
ROAD "C"

DGS Project Number: 000000000001826
NMR Project Number: 18-6456

Reference North: NORTH
Sheet Scale: AS SHOWN
Sheet Number: C2.06

ISSUE DATE

July 9, 2021

Login Name: tjd
Plot Date: March 19, 2021 - 6:06 pm
File Name: K:\2018\181957_CCC_Willits_Residential_Center\dwg\181957_SITE.dwg
XREFS: XL_TOPO | 181957_SDMH | 181957_SDMH | x-WRC-Site | x-WRC-TOPO | x-WRC-ALTA | Ukiah_WetlandCreation_20200923

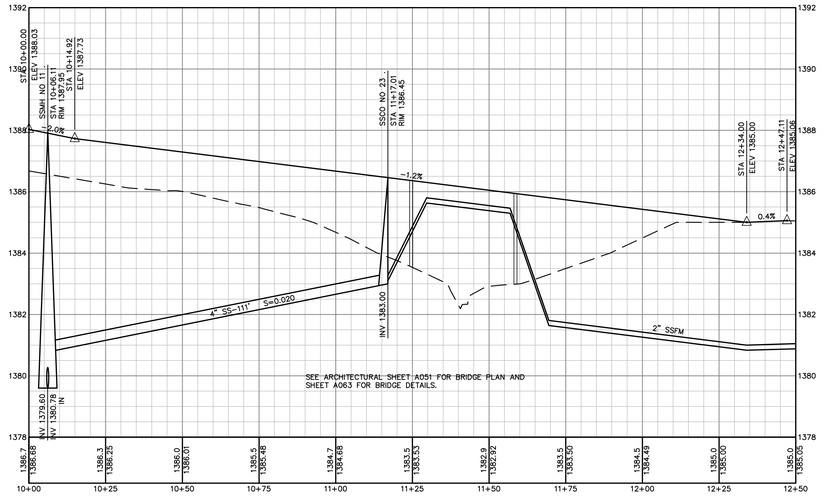

SCALE:
HORZ. 1" = 20'
VERT. 1" = 2'

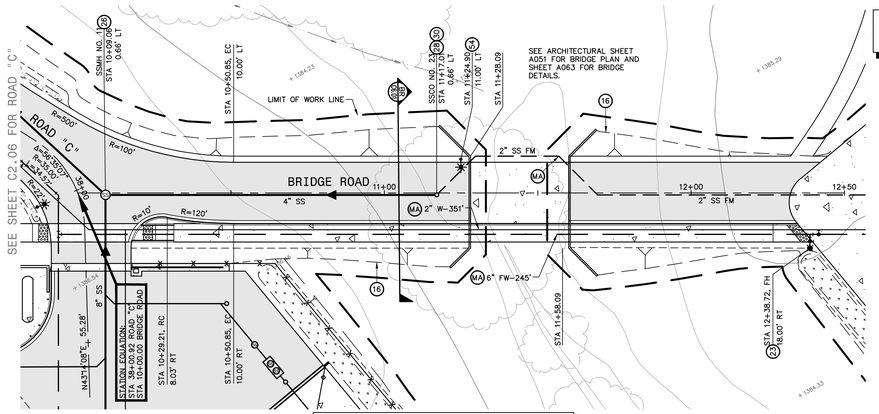

REFER TO SHEET C3.05 FOR GRADING CONTINUATION AND SHEET C4.05 FOR UTILITY CORDINATION OUTSIDE OF BRIDGE ROAD

REFER TO SHEET C3.04 FOR GRADING CONTINUATION AND SHEET C4.04 FOR UTILITY CORDINATION OUTSIDE OF BRIDGE ROAD

20 0 20 40
scale 1" = 20' feet

KEYNOTES

(16) APPROXIMATE LIMIT OF GRADING.

(23) FIRE HYDRANT AND LATERAL ASSEMBLY IN ACCORDANCE WITH CITY OF WILLITS STANDARD 502.

(24) GATE VALVE IN ACCORDANCE WITH CITY OF WILLITS STANDARD 501.

(25) SCHEDULE 40 PVC PIPE UTILITY CHASE HAVING A MINIMUM OF 18-INCHES OF COVER WITH TEMPORARY CAPS AT BOTH ENDS TO FACILITATE SITE IRRIGATION. REFER TO THE LANDSCAPE DRAWINGS TO COORDINATE CHASE LOCATIONS AND SIZES.

(26) SANITARY SEWER MANHOLE IN ACCORDANCE WITH CITY OF WILLITS STANDARD 301 HAVING A TRAFFIC RATED FRAME AND COVER IN ACCORDANCE WITH CITY OF WILLITS STANDARD 303.

(28) PERMANENT MAINLINE CLEANOUT IN ACCORDANCE WITH CITY OF WILLITS STANDARD 307.

(30) DISCHARGE FOR PRIVATE FORCE MAIN IN ACCORDANCE WITH CITY OF WILLITS STANDARD 311.

(41) PROVIDE FELT EXPANSION JOINT MATERIAL BETWEEN UTILITIES WHERE CLEARANCE IS LESS THAN 6-INCHES.

(43) THIS UTILITY HAS BEEN SHOWN FOR REFERENCE AND COORDINATION PURPOSES ONLY. REFER TO THE JOINT TRENCH / ELECTRICAL DRAWINGS.

(54) SITE LIGHTING. REFER TO THE ELECTRICAL DRAWINGS.

(MA) PROVIDE FLEXIBLE JOINTS AT UTILITY PENETRATIONS IN BRIDGE HEADWALL TO MECHANICALLY ATTACH THE WATER, FIRE MAIN AND SEWER FORCE MAIN TO THE BRIDGE.

IDENTIFICATION STAMP
DIV. OF THE STATE ARCHITECT
APP: 02-118630 INC:
REVIEWED FOR
SS ☐ FLS ☐ ACS ☑
DATE: 04/13/2021

OFFICE OF THE STATE FIRE MARSHAL
APPROVED FIRE AND PANIC ONLY
Approval of this plan does not authorize or approve any omission or deviation from applicable regulations. Final approval is subject to field inspection. One set of approved plans shall be available on the project site at all times.
PERMIT NO. 20-N-2332-CP
REVIEWED BY: LEO CATAYLO, OSFM
DATE: 4 / /2021

GENERAL SERVICES
Department of General Services
State of California
Real Estate Services Division
Project Management & Development Branch
707 Third Street, Suite 4-105
West Sacramento, California 95605

NICHOLS MELBURG & ROSSETTO
ARCHITECTS + ENGINEERS
300 Knollcrest Drive
Redding, CA. 96002
(530) 222-3300 (530) 222-3538 FAX
http://www.nmrdesign.com

Copyright © 2021
All ideas, designs, arrangements and plans indicated or represented by this drawing are owned by, and the property of, NICHOLS, MELBURG and ROSSETTO and were created, evolved and developed for use on, and in conjunction with, the specified project. None of such ideas, designs, arrangements or plans shall be used by, or disclosed to any person, firm or corporation for any purpose whatsoever without the written permission of NICHOLS, MELBURG and ROSSETTO.

LICENSE STAMPS

REGISTERED PROFESSIONAL ENGINEER
GREGORY H. JENNINGS
No. C-68337
CIVIL
STATE OF CALIFORNIA
3/25/2021

CONSULTANT

BKF
200 4th STREET
SUITE 300
SANTA ROSA, CA 95401
(707) 583-8500
www.bkf.com

DRAWING STATUS

CONSTRUCTION DOCUMENTS

ISSUE

No.	Date	Description
1	10/22/2020	INITIAL PLAN REVIEW
2	01/08/2021	AGENCY RESUBMITTAL
3	03/22/2021	AGENCY RESUBMITTAL

If drawing is not 30" x 42" it is a reduced print

PROJECT

RESIDENTIAL CENTER, UKIAH: REPLACEMENT OF EXISTING RESIDENTIAL CENTER

440 EAST HILL ROAD
WILLITS, CALIFORNIA, 95490
MENDOCINO COUNTY
CALIFORNIA CONSERVATION CORPS

Supervisor	Designed	Drawn
RFC	GHJ	BRL

DSA Application No.
02-118630

SHEET TITLE

PLAN & PROFILE
BRIDGE ROAD

DGS Project Number: 0000000000001826
NMR Project Number: 18-6456

Reference North: NORTH
Sheet Scale: AS SHOWN
Sheet Number: C2.07

ISSUE DATE

July 9, 2021

Login Name: tlpl
Plot Date: March 19, 2021 - 6:09 pm
File Name: K:\2018\181957_CCC_Willits_Residential_Center\dwg\181957_SITE.dwg
XREFS: A_(OFF) | 181957_SSMH | 181957_SSMH | x-WRC-Site | x-WRC-1990 | x-WRC-ALTA | Ukiah_WetlandCreation_20200923

SCALE:
HORZ. 1" = 20'
VERT. 1" = 10'

12+00

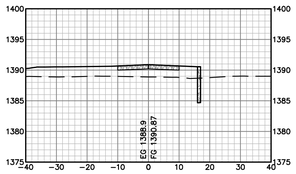

14+50

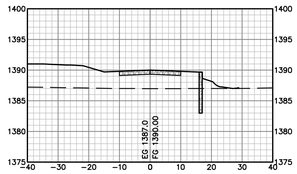

17+00

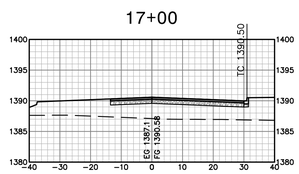

11+50

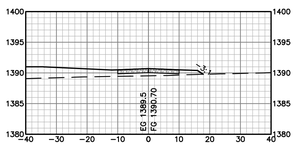

14+00

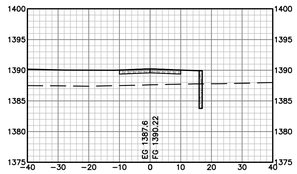

16+50

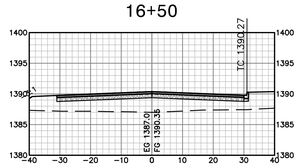

13+50

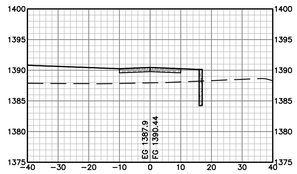

11+00

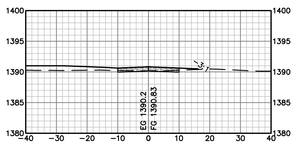

16+00

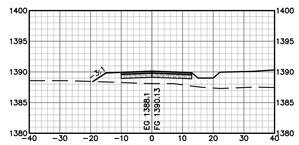

13+00

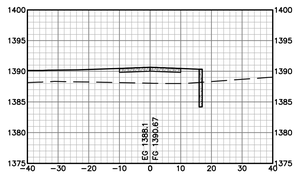

10+50

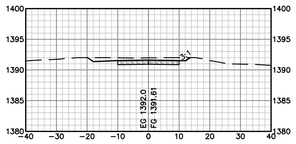

15+50

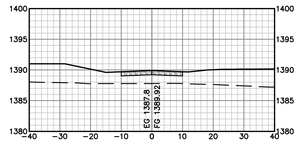

17+55

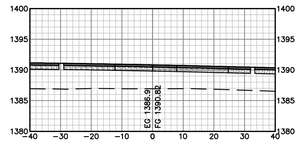

12+50

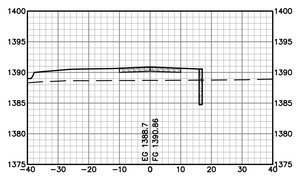

10+26

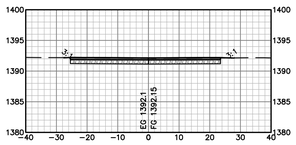

15+00

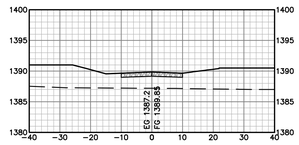

17+50

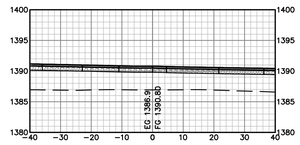

FOR REFERENCE ONLY

Login Name: tlpl
Plot Date: March 19, 2021 - 6:09 pm
File Name: K:\2018\181957_CCC_Willits_Residential_Center\Dwg\181957_SITE.dwg
XREFS: A_TOPO | 181957_SORH | 181957_SORH | x-WRC-Site | x-WRC-TOPO | x-WRC-ALTA | Ukiah_WetlandCreation_20200923

IDENTIFICATION STAMP
DIV. OF THE STATE ARCHITECT
APP: 02-118630 INC:
REVIEWED FOR
SS ☐ FLS ☐ ACS ☑
DATE: 04/13/2021

OFFICE OF THE STATE FIRE MARSHAL
APPROVED FIRE AND PANIC ONLY
Approval of this plan does not authorize or approve any omission or deviation from applicable regulations. Final approval is subject to field inspection. One set of approved plans shall be available on the project site at all times.
PERMIT NO. 20-N-2332-CP
REVIEWED BY: LEO CATAYLO, OSFM
DATE: 4 / 1 /2021

DGS GENERAL SERVICES
Department of General Services
State of California
Real Estate Services Division
Project Management & Development Branch
707 Third Street, Suite 4-105
West Sacramento, California 95605

NICHOLS MELBURG & ROSSETTO
ARCHITECTS + ENGINEERS
300 Knollcrest Drive
Redding, CA. 96002
(530) 222-3300 (530) 222-3538 FAX
http://www.nmrdesign.com

Copyright © 2021
All ideas, designs, arrangements and plans indicated or represented by this drawing are owned by, and the property of, NICHOLS, MELBURG and ROSSETTO and were created, evolved and developed for use on, and in conjunction with, the specified project. None of such ideas, designs, arrangements or plans shall be used by, or disclosed to any person, firm or corporation for any purpose whatsoever without the written permission of NICHOLS, MELBURG and ROSSETTO.

LICENSE STAMPS

REGISTERED PROFESSIONAL ENGINEER
GREGORY H. JENNINGS
No. C-68337
CIVIL
STATE OF CALIFORNIA
3/25/2021

CONSULTANT

BKF
200 4th STREET
SUITE 300
SANTA ROSA, CA 95401
(707) 583-8500
www.bkf.com

DRAWING STATUS
CONSTRUCTION DOCUMENTS

ISSUE

No.	Date	Description
1	10/22/2020	INITIAL PLAN REVIEW
2	01/08/2021	AGENCY RESUBMITTAL
3	03/22/2021	AGENCY RESUBMITTAL

If drawing is not 30" x 42" it is a reduced print

PROJECT
RESIDENTIAL CENTER, UKIAH: REPLACEMENT OF EXISTING RESIDENTIAL CENTER
440 EAST HILL ROAD
WILLITS, CALIFORNIA, 95490
MENDOCINO COUNTY
CALIFORNIA CONSERVATION CORPS

Supervisor	Designed	Drawn
RFC	GHJ	BRL

DSA Application No.
02-118630

SHEET TITLE
CROSS SECTIONS
ROAD "A"

DGS Project Number: 0000000000001826
NMR Project Number: 18-6456
Reference North
Sheet Scale: AS SHOWN
Sheet Number: C2.08

ISSUE DATE
July 9, 2021

SCALE:
HORZ. 1" = 20'
VERT. 1" = 10'

52+00

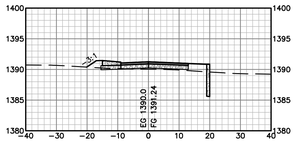

54+50

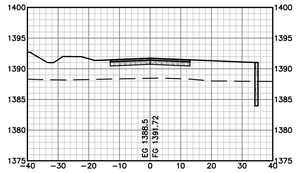

57+00

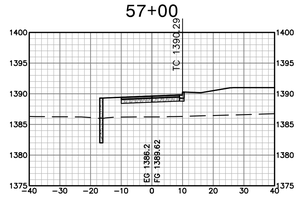

51+50

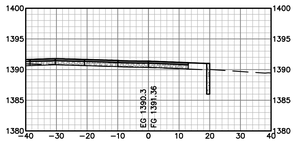

54+00

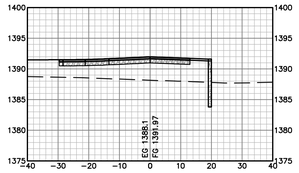

56+50

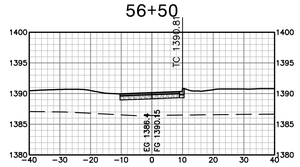

58+79

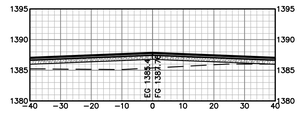

53+50

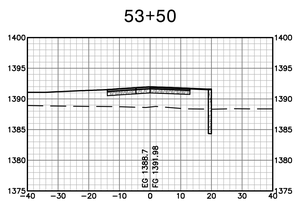

56+00

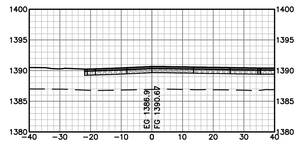

58+50

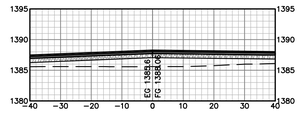

51+00

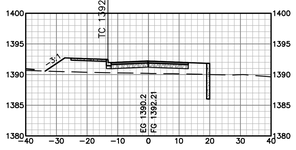

50+50

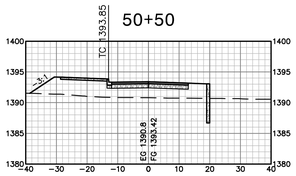

53+00

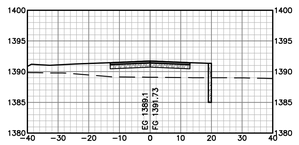

55+50

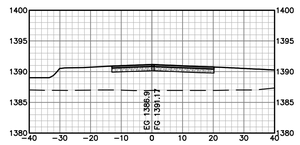

58+00

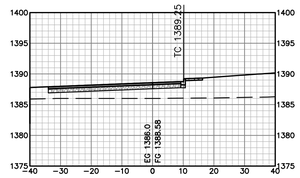

50+27

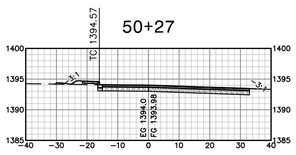

52+50

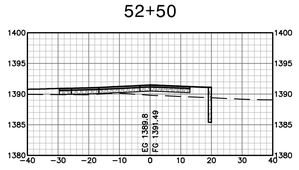

55+00

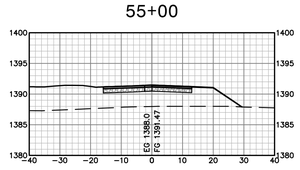

57+50

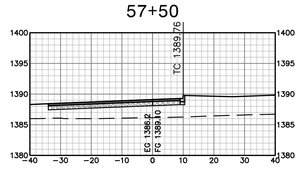

FOR REFERENCE ONLY

Login Name: tlpl
Plot Date: March 19, 2021 - 6:09 pm
File Name: K:\2018\181957_CCC_Willits_Residential_Center\dwg\181957_SITE.dwg
XREFS: "x_TOPO | 181957_SCRN | 181957_DORM | x-WRC-Site | x-WRC-TOPO | x-WRC-ALTA | Ukiah_WetlandCreation_20200923

IDENTIFICATION STAMP
DIV. OF THE STATE ARCHITECT
APP: 02-118630 INC:
REVIEWED FOR
SS ☐ FLS ☐ ACS ☑
DATE: 04/13/2021

OFFICE OF THE STATE FIRE MARSHAL
APPROVED FIRE AND PANIC ONLY
Approval of this plan does not authorize or approve any omission or deviation from applicable regulations. Final approval is subject to field inspection. One set of approved plans shall be available on the project site at all times.
PERMIT NO. 20-N-2332-CP
REVIEWED BY: LEO CATAYLO, OSFM
DATE: 4 / 1 /2021

DGS GENERAL SERVICES
Department of General Services
State of California
Real Estate Services Division
Project Management & Development Branch
707 Third Street, Suite 4-105
West Sacramento, California 95605

NICHOLS MELBURG & ROSSETTO
ARCHITECTS + ENGINEERS
300 Knollcrest Drive
Redding, CA. 96002
(530) 222-3300 (530) 222-3538 FAX
http://www.nmrdesign.com

Copyright © 2021
All ideas, designs, arrangements and plans indicated or represented by this drawing are owned by, and the property of, NICHOLS, MELBURG and ROSSETTO and were created, evolved and developed for use on, and in conjunction with, the specified project. None of such ideas, designs, arrangements or plans shall be used by, or disclosed to any person, firm or corporation for any purpose whatsoever without the written permission of NICHOLS, MELBURG and ROSSETTO.

LICENSE STAMPS

REGISTERED PROFESSIONAL ENGINEER
GREGORY H. JENNINGS
No. C-68337
CIVIL
STATE OF CALIFORNIA
3/25/2021

CONSULTANT

BKF
200 4th STREET
SUITE 300
SANTA ROSA, CA 95401
(707) 583-8500
www.bkf.com

DRAWING STATUS
CONSTRUCTION DOCUMENTS

ISSUE

No.	Date	Description
1	10/22/2020	INITIAL PLAN REVIEW
2	01/08/2021	AGENCY RESUBMITTAL
3	03/22/2021	AGENCY RESUBMITTAL

If drawing is not 30" x 42" it is a reduced print

PROJECT
RESIDENTIAL CENTER, UKIAH: REPLACEMENT OF EXISTING RESIDENTIAL CENTER
440 EAST HILL ROAD
WILLITS, CALIFORNIA, 95490
MENDOCINO COUNTY
CALIFORNIA CONSERVATION CORPS

Supervisor	Designed	Drawn
RFC	GHJ	BRL

DSA Application No.
02-118630

SHEET TITLE
CROSS SECTIONS ROAD "B"

DGS Project Number: 0000000000001826
NMR Project Number: 18-6456
Reference North
Sheet Scale: AS SHOWN
Sheet Number: C2.09

ISSUE DATE
July 9, 2021

SCALE:
HORZ. 1" = 20'
VERT. 1" = 10'

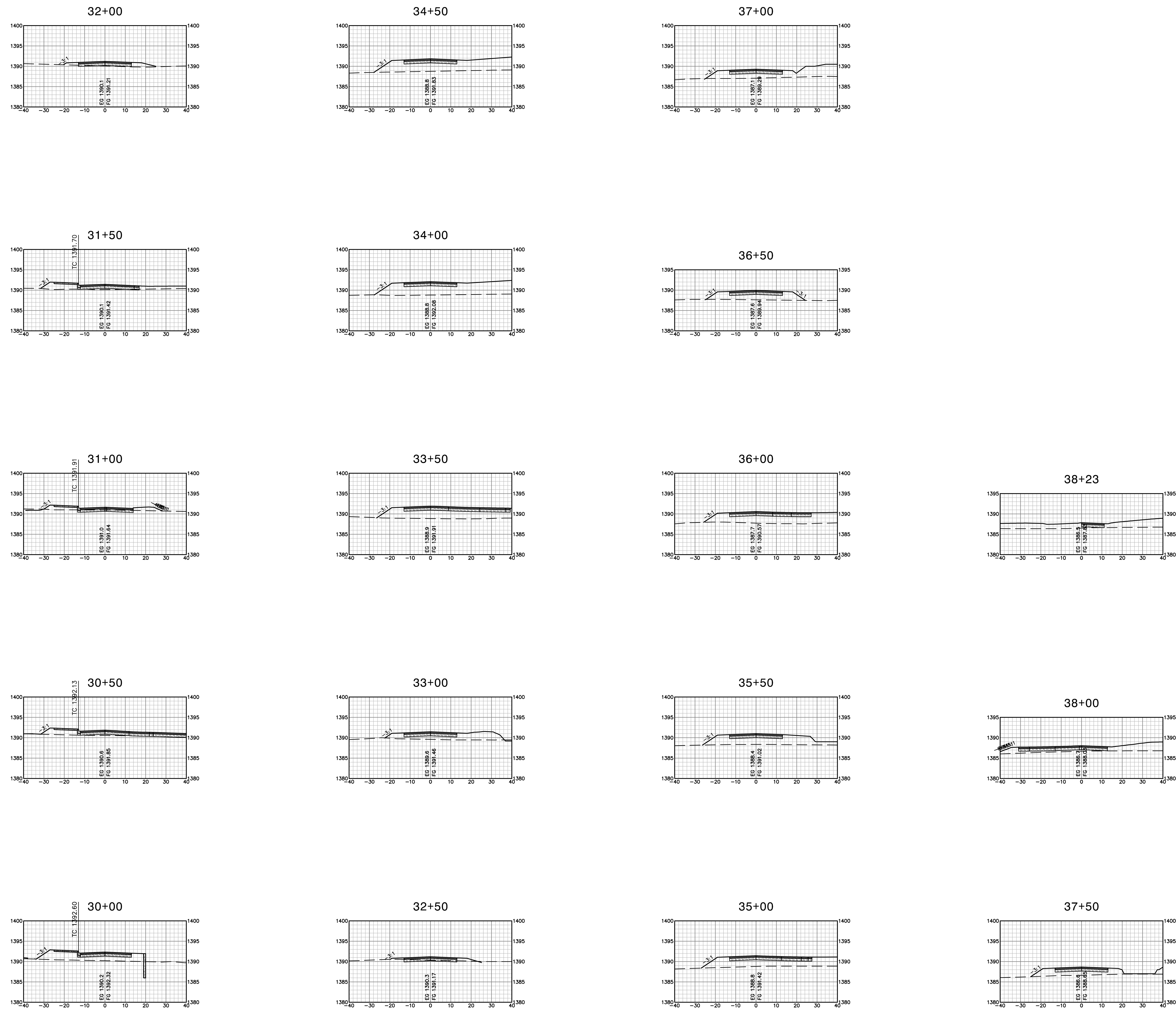

FOR REFERENCE ONLY

Login Name: tipt
Plot Date: March 19, 2021 - 6:10 pm
File Name: K:\2018\181957_CCC_Willits_Residential_Center\dwg\181957_SITE.dwg
XREFS: X_TOPO | 181957_SGRN | 181957_CORR | x-WRC-site | x-WRC-TOPO | x-WRC-ALTA | Ukiah_WetlandCreation_20200923

IDENTIFICATION STAMP
DIV. OF THE STATE ARCHITECT
APP: 02-118630 INC:
REVIEWED FOR
SS ☐ FLS ☐ ACS ☑
DATE: 04/13/2021

OFFICE OF THE STATE FIRE MARSHAL
APPROVED FIRE AND PANIC ONLY
Approval of this plan does not authorize or approve any omission or deviation from applicable regulations. Final approval is subject to field inspection. One set of approved plans shall be available on the project site at all times.
PERMIT NO. 20-N-2332-CP
REVIEWED BY: LEO CATAYLO, OSFM
DATE: 3 / /2021

GENERAL SERVICES
Department of General Services
State of California
Real Estate Services Division
Project Management & Development Branch
707 Third Street, Suite 4-105
West Sacramento, California 95605

NICHOLS MELBURG & ROSSETTO
ARCHITECTS + ENGINEERS
300 Knollcrest Drive
Redding, CA. 96002
(530) 222-3300 (530) 222-3538 FAX
http://www.nmrdesign.com

Copyright © 2021
All ideas, designs, arrangements and plans indicated or represented by this drawing are owned by, and the property of, NICHOLS, MELBURG and ROSSETTO and were created, evolved and developed for use on, and in conjunction with, the specified project. None of such ideas, designs, arrangements or plans shall be used by, or disclosed to any person, firm or corporation for any purpose whatsoever without the written permission of NICHOLS, MELBURG and ROSSETTO.

LICENSE STAMPS
REGISTERED PROFESSIONAL ENGINEER
GREGORY H. JENNINGS
No. C-68337
CIVIL
STATE OF CALIFORNIA
3/25/2021

CONSULTANT
BKF
200 4th STREET
SUITE 300
SANTA ROSA, CA 95401
(707) 583-8500
www.bkf.com

DRAWING STATUS
CONSTRUCTION DOCUMENTS

ISSUE

No.	Date	Description
1	10/22/2020	INITIAL PLAN REVIEW
2	01/08/2021	AGENCY RESUBMITTAL
3	03/22/2021	AGENCY RESUBMITTAL

If drawing is not 30" x 42" it is a reduced print

PROJECT
RESIDENTIAL CENTER, UKIAH: REPLACEMENT OF EXISTING RESIDENTIAL CENTER
440 EAST HILL ROAD
WILLITS, CALIFORNIA, 95490
MENDOCINO COUNTY
CALIFORNIA CONSERVATION CORPS

Supervisor	Designed	Drawn
RFC	GHJ	BRL

DSA Application No.
02-118630

SHEET TITLE
CROSS SECTIONS
ROAD "C"

DGS Project Number 000000000001826
NMR Project Number 18-6456
Reference North
Sheet Scale AS SHOWN
Sheet Number C2.10

ISSUE DATE
July 9, 2021

SCALE:
HORZ. 1" = 20'
VERT. 1" = 10'

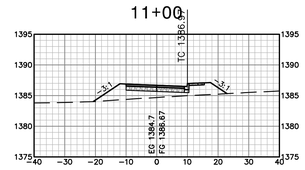

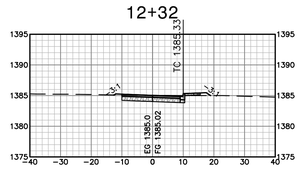

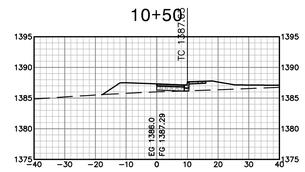

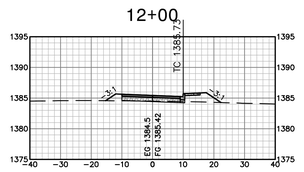

FOR REFERENCE ONLY

Login Name: tjot
Plot Date: March 19, 2021 - 6:10 pm
File Name: K:\2018\181957_CCC_Willits_Residential_Center\dwg\181957_SITE.dwg
XREFs: N_TOPO | 181957_SIGN | 181957_ZONE | x-WRC-plot | x-WRC-TOPO | x-WRC-ALTA | Ukiah_WetlandDelin_20200923

IDENTIFICATION STAMP
DIV. OF THE STATE ARCHITECT
APP: 02-118630 INC:
REVIEWED FOR
SS ☐ FLS ☐ ACS ☑
DATE: 04/13/2021

OFFICE OF THE STATE FIRE MARSHAL
APPROVED FIRE AND PANIC ONLY
Approval of this plan does not authorize or approve any omission or deviation from applicable regulations. Final approval is subject to field inspection. One set of approved plans shall be available on the project site at all times.
PERMIT NO. 20-N-2332-CP
REVIEWED BY: LEO CATAYLO, OSFM
DATE: 4 / /2021

DGS GENERAL SERVICES
Department of General Services
State of California
Real Estate Services Division
Project Management & Development Branch
707 Third Street, Suite 4-105
West Sacramento, California 95605

NICHOLS MELBURG & ROSSETTO
ARCHITECTS + ENGINEERS
300 Knollcrest Drive
Redding, CA. 96002
(530) 222-3300 (530) 222-3538 FAX
http://www.nmrdesign.com

Copyright © 2021
All ideas, designs, arrangements and plans indicated or represented by this drawing are owned by, and the property of, NICHOLS, MELBURG and ROSSETTO and were created, evolved and developed for use on, and in conjunction with, the specified project. None of such ideas, designs, arrangements or plans shall be used by, or disclosed to any person, firm or corporation for any purpose whatsoever without the written permission of NICHOLS, MELBURG and ROSSETTO.

LICENSE STAMPS

REGISTERED PROFESSIONAL ENGINEER
GREGGORY H. JENNINGS
No. C-68337
CIVIL
STATE OF CALIFORNIA
3/25/2021

CONSULTANT

BKF
200 4th STREET
SUITE 300
SANTA ROSA, CA 95401
(707) 583-8500
www.bkf.com

DRAWING STATUS

CONSTRUCTION DOCUMENTS

ISSUE

No.	Date	Description
1	10/22/2020	INITIAL PLAN REVIEW
2	01/08/2021	AGENCY RESUBMITTAL
3	03/22/2021	AGENCY RESUBMITTAL

If drawing is not 30" x 42" it is a reduced print

PROJECT

RESIDENTIAL CENTER, UKIAH: REPLACEMENT OF EXISTING RESIDENTIAL CENTER

440 EAST HILL ROAD
WILLITS, CALIFORNIA, 95490
MENDOCINO COUNTY
CALIFORNIA CONSERVATION CORPS

Supervisor	Designed	Drawn
RFC	GHJ	BRL

DSA Application No.
02-118630

SHEET TITLE

CROSS SECTIONS
BRIDGE ROAD

DGS Project Number
0000000000001826

NMR Project Number
18-6456

Reference North

Sheet Scale
AS SHOWN

Sheet Number
C2.11

ISSUE DATE
July 9, 2021

KEYNOTES

(3) THIS PATH SERVES AS AN OVERLAND DRAINAGE RELEASE AND SHALL NOT BE BLOCKED WITH CONSTRUCTION IMPROVEMENTS.

(4) SLOPE SURFACE AT A GRADIENT OF AT LEAST 5-PERCENT FOR A MINIMUM DISTANCE OF 10-FEET SO THAT WATER DRAINS AWAY FROM THE BUILDING IN ACCORDANCE WITH SECTION 1804.4 OF THE 2019 CALIFORNIA BUILDING CODE.

(5) PEDESTRIAN WALKWAY HAVING A CROSS SLOPE WHICH DOES NOT EXCEED 2-PERCENT IN ACCORDANCE WITH SECTION 11B-403.3 OF THE 2019 CALIFORNIA BUILDING CODE.

(6) PEDESTRIAN CURB RAMP AND DETECTABLE WARNING SURFACE IN ACCORDANCE WITH SECTION 11B-406 OF THE 2019 CALIFORNIA BUILDING CODE.

(7) DETECTABLE WARNING SURFACE IN ACCORDANCE WITH SECTION 11B-705.1 OF THE 2019 CALIFORNIA BUILDING CODE.

(8) PEDESTRIAN RAMP IN ACCORDANCE WITH SECTION 11B-405 OF THE 2019 CALIFORNIA BUILDING CODE. REFER TO THE ARCHITECTURAL DRAWINGS FOR HANDRAILS AND ADDITIONAL INFORMATION.

(9) SLOPE SURFACE AT A GRADIENT NOT EXCEEDING 2-PERCENT TO PROVIDE AN ACCESSIBLE PATH OF TRAVEL IN ACCORDANCE WITH SECTION 11B-403.3 OF THE 2019 CALIFORNIA BUILDING CODE (CBC) WHILE PROVIDING DRAINAGE AWAY FROM THE BUILDING IN ACCORDANCE WITH SECTION 1804.4 OF THE CBC.

(10) LANDING HAVING A SLOPE WHICH DOES NOT EXCEED 2-PERCENT IN ANY DIRECTION IN ACCORDANCE WITH SECTION 11B-404.2.4.4 OF THE 2019 CALIFORNIA BUILDING CODE.

(11) CONFORM TO EXISTING SURFACE ELEVATION IN A MANNER WHICH GENERATES A UNIFORM TRANSITION BETWEEN SURFACES AND DOES NOT IMPEDE DRAINAGE.

(12) BACKFILL NEW IMPROVEMENTS TO THE LINES AND ELEVATIONS SHOWN WITH SOIL SUITABLE FOR PLANTING IN A MANNER WHICH GENERATES A UNIFORM TRANSITION BETWEEN SURFACES AND PROVIDES POSITIVE DRAINAGE AWAY FROM STRUCTURES. PROVIDE MATERIAL SEPARATION IN ACCORDANCE WITH SECTION 1404.10.1.3 OF THE 2019 CALIFORNIA BUILDING CODE.

(13) RETAINING WALL. REFER TO THE ARCHITECTURAL DRAWINGS. BLOCK OUT THE TOP OF WALL AT LOCATIONS APPROVED BY THE ARCHITECT AND OWNER AND IN A MANNER WHICH AVOIDS UTILITIES WITHIN THE WALL TO ALLOW STORM WATER TO PASS OVER THE WALL.

(14) CONCRETE SLAB TO ACCOMMODATE THE TRASH ENCLOSURE. COORDINATE THE LOCATION OF TRASH ENCLOSURE FOOTINGS PRIOR TO POURING THE CONCRETE SLAB AND CURB AND GUTTER IN THE VICINITY OF THE TRASH ENCLOSURE.

(15) COORDINATE WITH THE OWNER OF THIS UTILITY TO HAVE THEM HOLD THE UTILITY POLE IN PLACE WHILE CONDUCTING IMPROVEMENTS IN THIS AREA.

(16) APPROXIMATE LIMIT OF GRADING.

SEE SHEET G400 FOR LOCATIONS OF EXISTING WETLANDS TO REMAIN. EXISTING WETLANDS TO BE IMPACTED BY GRADING AND NEW MITIGATION WETLANDS TO BE CREATED BY NEW GRADING AND PLANTING WORK

TABLE 1

AREA DESIGNATION	POROSITY (%)	DEPTH (FT)	TREATMENT AREA (SF)
A	0.5	4.0	1250
B	0.5	5.0	1377
C	N/A	N/A	N/A
D	0.5	6.0	3156
E	0.5	3.3	348
F	0.5	4.5	93
G	0.5	4.0	396
H	0.5	1.8	535
I	0.5	5.0	1287
J	0.5	2.5	140
K	0.5	2.3	258
L	0.5	3.3	601
M	0.5	2.0	655
N	0.5	4.3	1180
O	0.5	3.3	73
P	0.5	1.5	212
Q	0.5	2.8	430
R	0.5	2.0	1581
S	0.5	2.0	362
T	0.5	2.3	453
U	0.5	3.3	1285
V	0.5	2.0	584
W	0.5	1.8	696
X	0.5	2.5	306
Y	0.5	3.5	678
Z	0.5	6.3	254
AA	0.5	3.5	593
BB	0.5	5.5	326
CC	0.5	5.0	119
DD	0.5	3.8	294
EE	0.5	3.8	294
FF	0.5	1.8	297
GG	0.5	4.0	294
HH	0.5	1.3	473
II	0.5	1.5	322
JJ	0.5	3.5	294
KK	0.5	4.0	294
LL	0.5	3.3	185

20 0 20 40
scale 1" = 20' feet

IDENTIFICATION STAMP
DIV. OF THE STATE ARCHITECT
APP: 02-118630 INC:
REVIEWED FOR
SS ☐ FLS ☐ ACS ☑
DATE: 04/13/2021

OFFICE OF THE STATE FIRE MARSHAL
APPROVED FIRE AND PANIC ONLY
Approval of this plan does not authorize or approve any omission or deviation from applicable regulations. Final approval is subject to field inspection. One set of approved plans shall be available on the project site at all times.
PERMIT NO. 20-N-2332-CP
REVIEWED BY: LEO CATAYLO, OSFM
DATE: 4 / /2021

DGS GENERAL SERVICES
Department of General Services
State of California
Real Estate Services Division
Project Management & Development Branch
707 Third Street, Suite 4-105
West Sacramento, California 95605

NICHOLS MELBURG & ROSSETTO ARCHITECTS + ENGINEERS
300 Knollcrest Drive
Redding, CA. 96002
(530) 222-3300 (530) 222-3538 FAX
http://www.nmrdesign.com

Copyright © 2021
All ideas, designs, arrangements and plans indicated or represented by this drawing are owned by, and the property of, NICHOLS, MELBURG and ROSSETTO and were created, evolved and developed for use on, and in conjunction with, the specified project. None of such ideas, designs, arrangements or plans shall be used by, or disclosed to any person, firm or corporation for any purpose whatsoever without the written permission of NICHOLS, MELBURG and ROSSETTO.

LICENSE STAMPS

REGISTERED PROFESSIONAL ENGINEER
GREGGORY H. JENNINGS
No. C-68337
CIVIL
STATE OF CALIFORNIA
3/25/2021

CONSULTANT

BKF
200 4th STREET
SUITE 300
SANTA ROSA, CA 95401
(707) 583-8500
www.bkf.com

DRAWING STATUS

CONSTRUCTION DOCUMENTS

ISSUE

No.	Date	Description
1	10/22/2020	INITIAL PLAN REVIEW
2	01/08/2021	AGENCY RESUBMITTAL
3	03/22/2021	AGENCY RESUBMITTAL

If drawing is not 30" x 42" it is a reduced print

PROJECT

RESIDENTIAL CENTER, UKIAH: REPLACEMENT OF EXISTING RESIDENTIAL CENTER

440 EAST HILL ROAD
WILLITS, CALIFORNIA, 95490
MENDOCINO COUNTY
CALIFORNIA CONSERVATION CORPS

Supervisor	Designed	Drawn
RFC	GHJ	BRL

DSA Application No.
02-118630

SHEET TITLE

GRADING PLAN
HOUSING AREA

DGS Project Number: 0000000000001826
NMR Project Number: 18-6456

Reference North: NORTH
Sheet Scale: AS SHOWN
Sheet Number: C3.01

ISSUE DATE
July 9, 2021

Login Name: tjat
Plot Date: March 19, 2021 - 6:16 pm
File Name: K:\2018\181957_CCC_Willits_Residential_Center\dwg\181957_SITE.dwg
XREFS: K_TOPO | 181957_SIGN | 181957_GRAD | x-WRC-Site | x-WRC-TOPO | x-WRC-ALTA | Ukiah_WetlandCreation_20200923

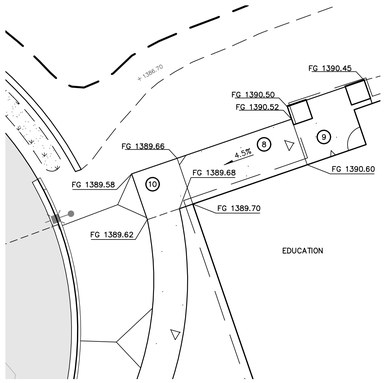

G3 GRADING AREA 03
SCALE: 1"=10'

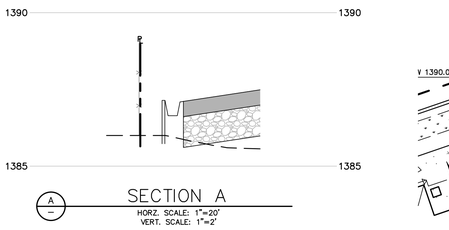

A SECTION A
HORZ. SCALE: 1"=20'
VERT. SCALE: 1"=2'

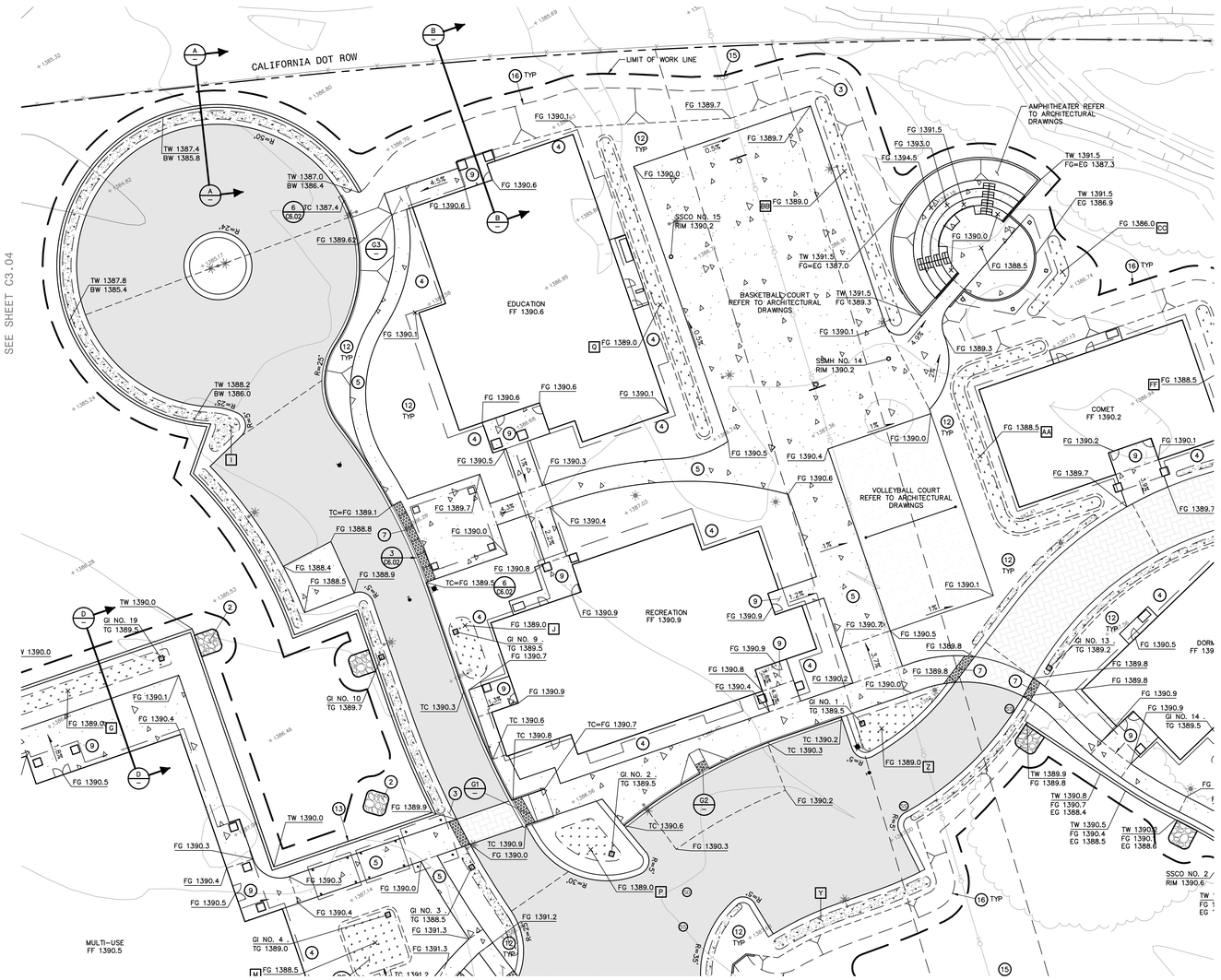

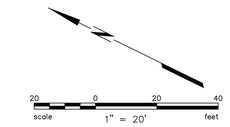

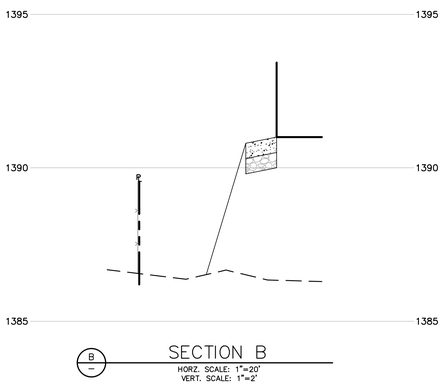

B SECTION B
HORZ. SCALE: 1"=20'
VERT. SCALE: 1"=2'

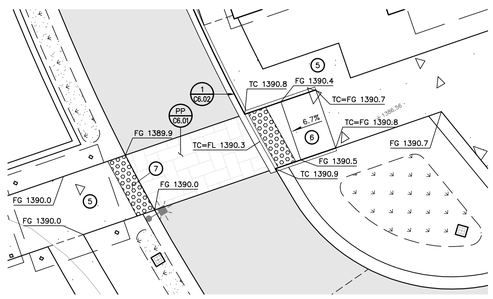

G1 GRADING AREA 01
SCALE: 1"=10'

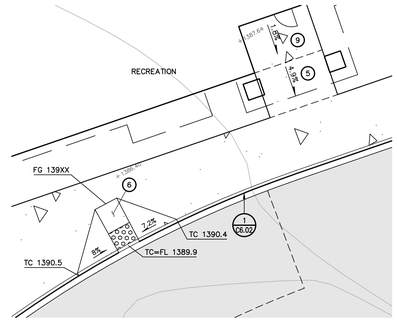

G2 GRADING AREA 02
SCALE: 1"=10'

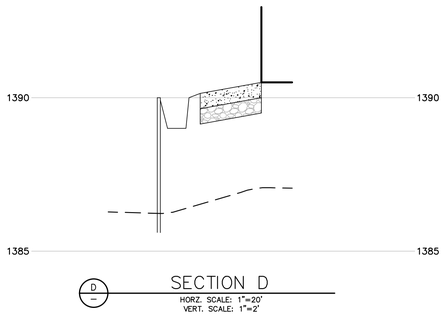

D SECTION D
HORZ. SCALE: 1"=20'
VERT. SCALE: 1"=2'

KEYNOTES

2. ALL GRADING SHALL CONFORM TO GEOTECHNICAL REPORT PREPARED BY SHN ENGINEERS & GEOLOGISTS ON MAY 2018 REMOVE EXISTING MATERIAL AS REQUIRED TO PROVIDE A LAYER OF GEOSYNTHETIC FABRIC AND A 1-FOOT THICK BLANKET OF CALTRANS CLASS II ROCK SLOPE PROTECTION IN ACCORDANCE WITH CALTRANS 2018 STANDARD SPECIFICATIONS SECTION 72-2. SEE DETAIL SO/C6.02
3. THIS PATH SERVES AS AN OVERLAND DRAINAGE RELEASE AND SHALL NOT BE BLOCKED WITH CONSTRUCTION IMPROVEMENTS.
4. SLOPE SURFACE AT A GRADIENT OF AT LEAST 5-PERCENT FOR A MINIMUM DISTANCE OF 10-FEET SO THAT WATER DRAINS AWAY FROM THE BUILDING IN ACCORDANCE WITH SECTION 1804.4 OF THE 2019 CALIFORNIA BUILDING CODE.
5. PEDESTRIAN WALKWAY HAVING A CROSS SLOPE WHICH DOES NOT EXCEED 2-PERCENT IN ACCORDANCE WITH SECTION 11B-403.3 OF THE 2019 CALIFORNIA BUILDING CODE.
6. PEDESTRIAN CURB RAMP AND DETECTABLE WARNING SURFACE IN ACCORDANCE WITH SECTION 11B-406 OF THE 2019 CALIFORNIA BUILDING CODE.
7. DETECTABLE WARNING SURFACE IN ACCORDANCE WITH SECTION 11B-705.1 OF THE 2019 CALIFORNIA BUILDING CODE.
8. PEDESTRIAN RAMP IN ACCORDANCE WITH SECTION 11B-405 OF THE 2019 CALIFORNIA BUILDING CODE. REFER TO THE ARCHITECTURAL DRAWINGS FOR HANDRAILS AND ADDITIONAL INFORMATION.
9. SLOPE SURFACE AT A GRADIENT NOT EXCEEDING 2-PERCENT TO PROVIDE AN ACCESSIBLE PATH OF TRAVEL IN ACCORDANCE WITH SECTION 11B-403.3 OF THE 2019 CALIFORNIA BUILDING CODE (CBC) WHILE PROVIDING DRAINAGE AWAY FROM THE BUILDING IN ACCORDANCE WITH SECTION 1804.4 OF THE CBC.
10. LANDING HAVING A SLOPE WHICH DOES NOT EXCEED 2-PERCENT IN ANY DIRECTION IN ACCORDANCE WITH SECTION 11B-404.2.4.4 OF THE 2019 CALIFORNIA BUILDING CODE.
11. CONFORM TO EXISTING SURFACE ELEVATION IN A MANNER WHICH GENERATES A UNIFORM TRANSITION BETWEEN SURFACES AND DOES NOT IMPEDE DRAINAGE.
12. BACKFILL NEW IMPROVEMENTS TO THE LINES AND ELEVATIONS SHOWN WITH SOIL SUITABLE FOR PLANTING IN A MANNER WHICH GENERATES A UNIFORM TRANSITION BETWEEN SURFACES AND PROVIDES POSITIVE DRAINAGE AWAY FROM STRUCTURES. PROVIDE MATERIAL SEPARATION IN ACCORDANCE WITH SECTION 1404.10.1.3 OF THE 2019 CALIFORNIA BUILDING CODE.
13. RETAINING WALL. REFER TO THE ARCHITECTURAL DRAWINGS. BLOCK OUT THE TOP OF WALL AT LOCATIONS APPROVED BY THE ARCHITECT AND OWNER AND IN A MANNER WHICH AVOIDS UTILITIES WITHIN THE WALL TO ALLOW STORM WATER TO PASS OVER THE WALL.
14. CONCRETE SLAB TO ACCOMMODATE THE TRASH ENCLOSURE. COORDINATE THE LOCATION OF TRASH ENCLOSURE FOOTINGS PRIOR TO POURING THE CONCRETE SLAB AND CURB AND GUTTER IN THE VICINITY OF THE TRASH ENCLOSURE.
15. COORDINATE WITH THE OWNER OF THIS UTILITY TO HAVE THEM HOLD THE UTILITY POLE IN PLACE WHILE CONDUCTING IMPROVEMENTS IN THIS AREA.
16. APPROXIMATE LIMIT OF GRADING.

SEE SHEET G400 FOR LOCATIONS OF EXISTING WETLANDS TO REMAIN. EXISTING WETLANDS TO BE IMPACTED BY GRADING AND NEW MITIGATION WETLANDS TO BE CREATED BY NEW GRADING AND PLANTING WORK

IDENTIFICATION STAMP
DIV. OF THE STATE ARCHITECT
APP: 02-118630 INC:
REVIEWED FOR
SS ☐ FLS ☐ ACS ☑
DATE: 04/13/2021

OFFICE OF THE STATE FIRE MARSHAL
APPROVED FIRE AND PANIC ONLY
Approval of this plan does not authorize or approve any omission or deviation from applicable regulations. Final approval is subject to field inspection. One set of approved plans shall be available on the project site at all times.
PERMIT NO. 2019-2332-CP
REVIEWED BY: LEO CATAYLO, OSFM
DATE: 4/1/2021

DGS GENERAL SERVICES
Department of General Services
State of California
Real Estate Services Division
Project Management & Development Branch
707 Third Street, Suite 4-105
West Sacramento, California 95605

NICHOLS MELBURG & ROSSETTO
ARCHITECTS + ENGINEERS
300 Knollcrest Drive
Redding, CA. 96002
(530) 222-3300 (530) 222-3538 FAX
http://www.nmrdesign.com

Copyright © 2021
All ideas, designs, arrangements and plans indicated or represented by this drawing are owned by, and the property of, NICHOLS, MELBURG and ROSSETTO and were created, evolved and developed for use on, and in conjunction with, the specified project. None of such ideas, designs, arrangements or plans shall be used by, or disclosed to any person, firm or corporation for any purpose whatsoever without the written permission of NICHOLS, MELBURG and ROSSETTO.

LICENSE STAMPS

REGISTERED PROFESSIONAL ENGINEER
GREGORY H. JENNINGS
No. C-68337
CIVIL
STATE OF CALIFORNIA
3/25/2021

CONSULTANT

BKF
200 4th STREET
SUITE 300
SANTA ROSA, CA 95401
(707) 583-8500
www.bkf.com

DRAWING STATUS
CONSTRUCTION DOCUMENTS

ISSUE

No.	Date	Description
1	10/22/2020	INITIAL PLAN REVIEW
2	01/08/2021	AGENCY RESUBMITTAL
3	03/22/2021	AGENCY RESUBMITTAL

If drawing is not 30" x 42" it is a reduced print

PROJECT
RESIDENTIAL CENTER, UKIAH: REPLACEMENT OF EXISTING RESIDENTIAL CENTER
440 EAST HILL ROAD
WILLITS, CALIFORNIA, 95490
MENDOCINO COUNTY
CALIFORNIA CONSERVATION CORPS

Supervisor	Designed	Drawn
RFC	GHJ	BRL

DSA Application No.
02-118630

SHEET TITLE
GRADING PLAN
RECREATION AREA

DGS Project Number: 000000000001826
NMR Project Number: 18-6456
Reference North: NORTH
Sheet Scale: AS SHOWN
Sheet Number: C3.02

ISSUE DATE
July 9, 2021

Login Name: lgt
Plot Date: March 19, 2021 - 6:15 pm
File Name: K:\2018\181957_CCC_Willits_Residential_Center\dwg\181957_SITE.dwg
XREFS: X_OPO | 181957_SDMH | X-WRG-Site | X-WRG-TOPO | X-WRG-ALTA | Ukiah_Wetland Creation_20200923

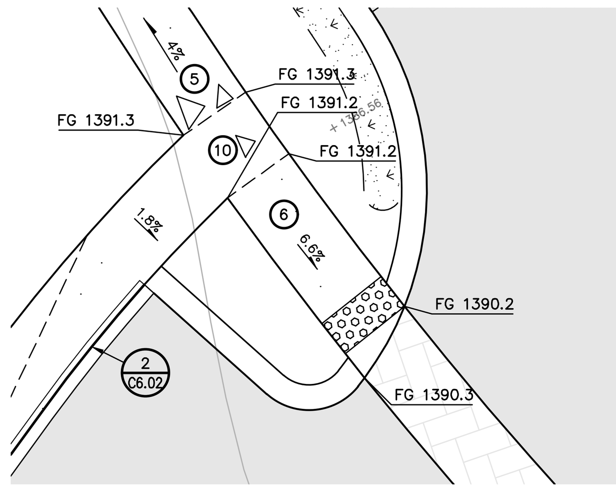

G4 GRADING AREA 04

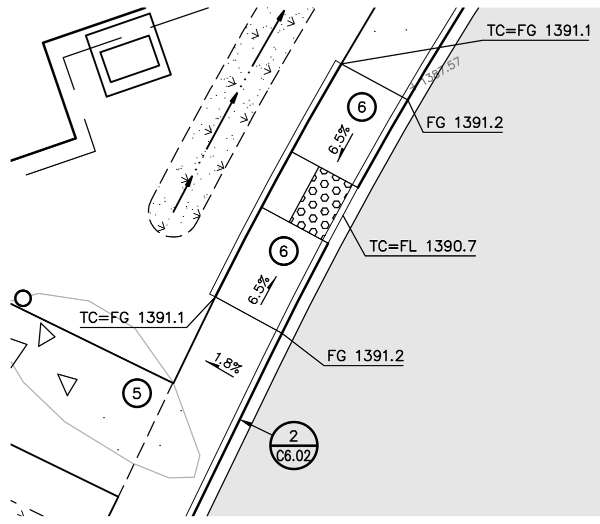

G5 GRADING AREA 05

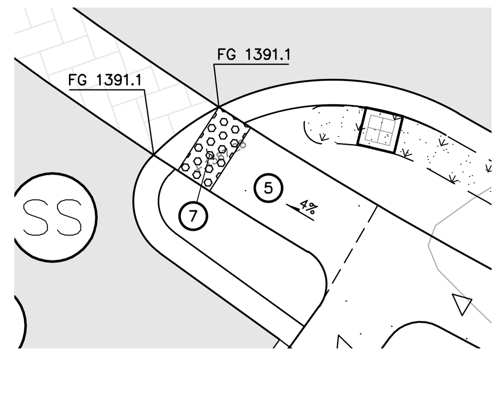

G6 GRADING AREA 06

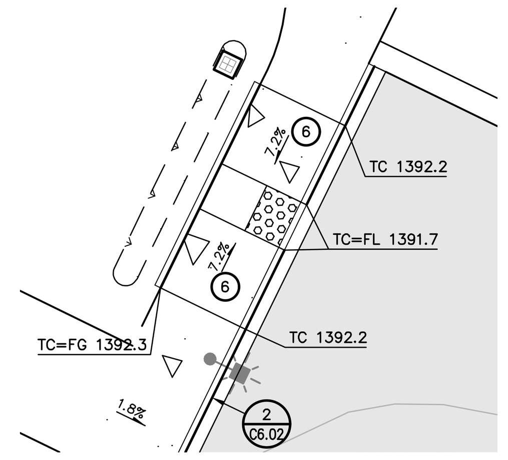

G7 GRADING AREA 07

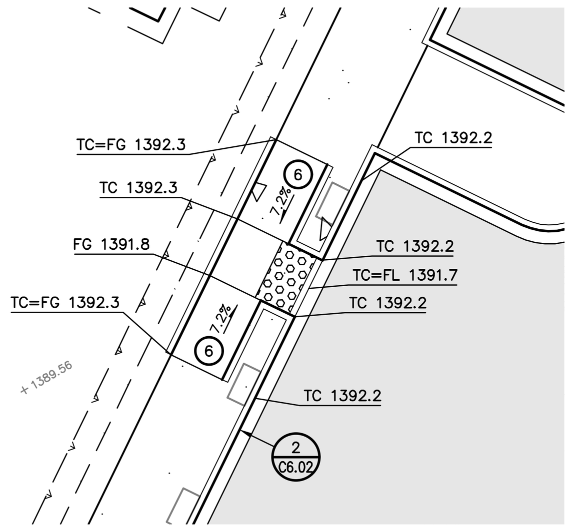

G8 GRADING AREA 08

KEYNOTES

(2) ALL GRADING SHALL CONFORM TO GEOTECHNICAL REPORT PREPARED BY SHN ENGINEERS & GEOLOGISTS ON MAY 2018 REMOVE EXISTING MATERIAL AS REQUIRED TO PROVIDE A LAYER OF GEOSYNTHETIC FABRIC AND A 1-FOOT THICK BLANKET OF CALTRANS CLASS II ROCK SLOPE PROTECTION IN ACCORDANCE WITH CALTRANS 2018 STANDARD SPECIFICATIONS SECTION 72-2. SEE DETAIL S0/C6.02

(3) THIS PATH SERVES AS AN OVERLAND DRAINAGE RELEASE AND SHALL NOT BE BLOCKED WITH CONSTRUCTION IMPROVEMENTS.

(4) SLOPE SURFACE AT A GRADIENT OF AT LEAST 5-PERCENT FOR A MINIMUM DISTANCE OF 10-FEET SO THAT WATER DRAINS AWAY FROM THE BUILDING IN ACCORDANCE WITH SECTION 1804.4 OF THE 2019 CALIFORNIA BUILDING CODE.

(5) PEDESTRIAN WALKWAY HAVING A CROSS SLOPE WHICH DOES NOT EXCEED 2-PERCENT IN ACCORDANCE WITH SECTION 11B-403.3 OF THE 2019 CALIFORNIA BUILDING CODE.

(6) PEDESTRIAN CURB RAMP AND DETECTABLE WARNING SURFACE IN ACCORDANCE WITH SECTION 11B-406 OF THE 2019 CALIFORNIA BUILDING CODE.

(7) DETECTABLE WARNING SURFACE IN ACCORDANCE WITH SECTION 11B-705.1 OF THE 2019 CALIFORNIA BUILDING CODE.

(8) PEDESTRIAN RAMP IN ACCORDANCE WITH SECTION 11B-405 OF THE 2019 CALIFORNIA BUILDING CODE. REFER TO THE ARCHITECTURAL DRAWINGS FOR HANDRAILS AND ADDITIONAL INFORMATION.

(9) SLOPE SURFACE AT A GRADIENT NOT EXCEEDING 2-PERCENT TO PROVIDE AN ACCESSIBLE PATH OF TRAVEL IN ACCORDANCE WITH SECTION 11B-403.3 OF THE 2019 CALIFORNIA BUILDING CODE (CBC) WHILE PROVIDING DRAINAGE AWAY FROM THE BUILDING IN ACCORDANCE WITH SECTION 1804.4 OF THE CBC.

(10) LANDING HAVING A SLOPE WHICH DOES NOT EXCEED 2-PERCENT IN ANY DIRECTION IN ACCORDANCE WITH SECTION 11B-404.2.4.4 OF THE 2019 CALIFORNIA BUILDING CODE.

(11) CONFORM TO EXISTING SURFACE ELEVATION IN A MANNER WHICH GENERATES A UNIFORM TRANSITION BETWEEN SURFACES AND DOES NOT IMPEDE DRAINAGE.

(12) BACKFILL NEW IMPROVEMENTS TO THE LINES AND ELEVATIONS SHOWN WITH SOIL SUITABLE FOR PLANTING IN A MANNER WHICH GENERATES A UNIFORM TRANSITION BETWEEN SURFACES AND PROVIDES POSITIVE DRAINAGE AWAY FROM STRUCTURES. PROVIDE MATERIAL SEPARATION IN ACCORDANCE WITH SECTION 1404.10.1.3 OF THE 2019 CALIFORNIA BUILDING CODE.

(13) RETAINING WALL. REFER TO THE ARCHITECTURAL DRAWINGS. BLOCK OUT THE TOP OF WALL AT LOCATIONS APPROVED BY THE ARCHITECT AND OWNER AND IN A MANNER WHICH AVOIDS UTILITIES WITHIN THE WALL TO ALLOW STORM WATER TO PASS OVER THE WALL.

(14) CONCRETE SLAB TO ACCOMMODATE THE TRASH ENCLOSURE. COORDINATE THE LOCATION OF TRASH ENCLOSURE FOOTINGS PRIOR TO POURING THE CONCRETE SLAB AND CURB AND GUTTER IN THE VICINITY OF THE TRASH ENCLOSURE.

(15) COORDINATE WITH THE OWNER OF THIS UTILITY TO HAVE THEM HOLD THE UTILITY POLE IN PLACE WHILE CONDUCTING IMPROVEMENTS IN THIS AREA.

(16) APPROXIMATE LIMIT OF GRADING.

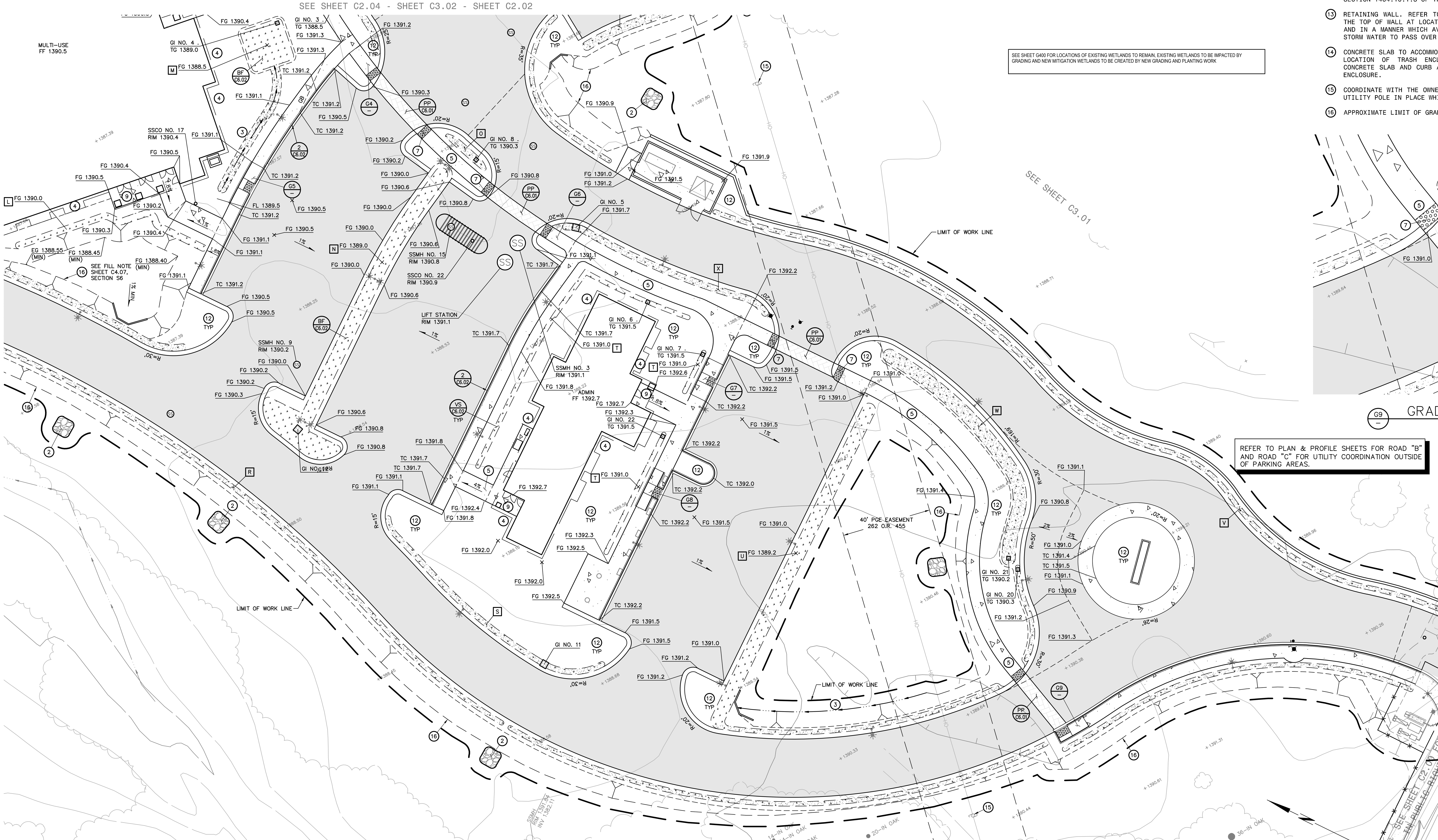

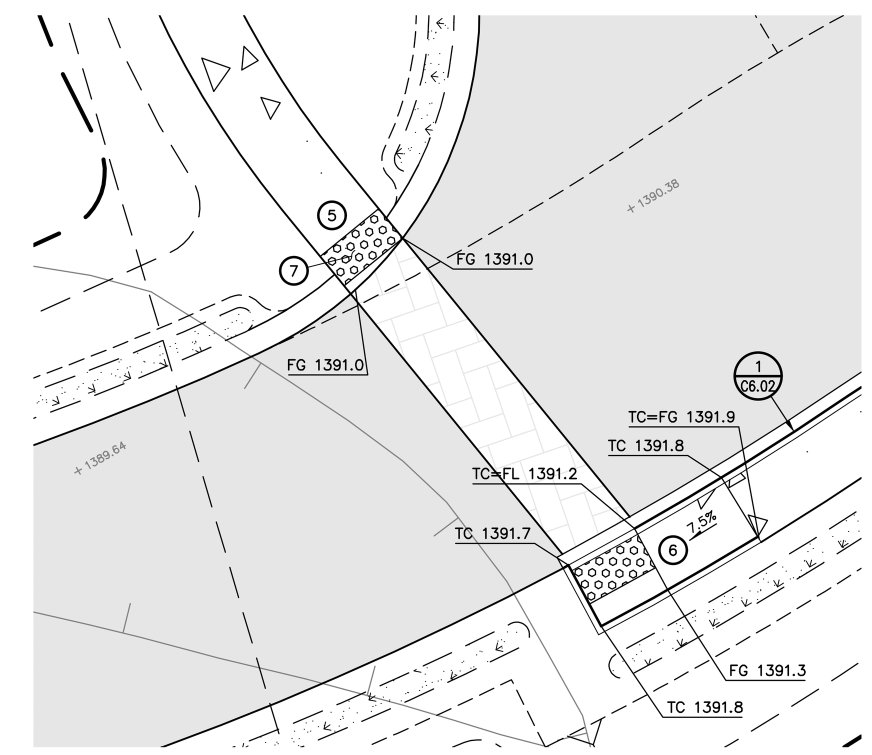

G9 GRADING AREA 09

1" = 20'

IDENTIFICATION STAMP
DIV. OF THE STATE ARCHITECT
APP: 02-118630 INC:
REVIEWED FOR
SS ☐ FLS ☐ ACS ☑
DATE: 04/13/2021

OFFICE OF THE STATE FIRE MARSHAL
APPROVED FIRE AND PANIC ONLY
Approval of this plan does not authorize or approve any omission or deviation from applicable regulations. Final approval is subject to field inspection. One set of approved plans shall be available on the project site at all times.
PERMIT NO.: 20-N-2332-CP
REVIEWED BY: LITO CATAYLO, OSFM
DATE: 3/1/2021

DGS GENERAL SERVICES
Department of General Services
State of California
Real Estate Services Division
Project Management & Development Branch
707 Third Street, Suite 4-105
West Sacramento, California 95605

NICHOLS MELBURG & ROSSETTO
ARCHITECTS + ENGINEERS
300 Knollcrest Drive
Redding, CA. 96002
(530) 222-3300 (530) 222-3538 FAX
http://www.nmrdesign.com

Copyright © 2021
All ideas, designs, arrangements and plans indicated or represented by this drawing are owned by, and the property of, NICHOLS, MELBURG and ROSSETTO and were created, evolved and developed for use on, and in conjunction with, the specified project. None of such ideas, designs, arrangements or plans shall be used by, or disclosed to any person, firm or corporation for any purpose whatsoever without the written permission of NICHOLS, MELBURG and ROSSETTO.

LICENSE STAMPS
REGISTERED PROFESSIONAL ENGINEER
GREGGORY H. JENNINGS
No. C-68337
CIVIL
STATE OF CALIFORNIA
3/25/2021

CONSULTANT

BKF
200 4th STREET
SUITE 300
SANTA ROSA, CA 95401
(707) 583-8500
www.bkf.com

DRAWING STATUS
CONSTRUCTION DOCUMENTS

ISSUE

No.	Date	Description
1	10/22/2020	INITIAL PLAN REVIEW
2	01/08/2021	AGENCY RESUBMITTAL
3	03/22/2021	AGENCY RESUBMITTAL

If drawing is not 30" x 42" it is a reduced print

PROJECT
RESIDENTIAL CENTER, UKIAH: REPLACEMENT OF EXISTING RESIDENTIAL CENTER
440 EAST HILL ROAD
WILLITS, CALIFORNIA, 95490
MENDOCINO COUNTY
CALIFORNIA CONSERVATION CORPS

Supervisor	Designed	Drawn
RFC	GHJ	BRL

DSA Application No.
02-118630

SHEET TITLE
GRADING PLAN
ADMIN AND PARKING

DGS Project Number	NMR Project Number
000000000001826	18-6456

Reference North: NORTH
Sheet Scale: AS SHOWN
Sheet Number: C3.03

ISSUE DATE
July 9, 2021

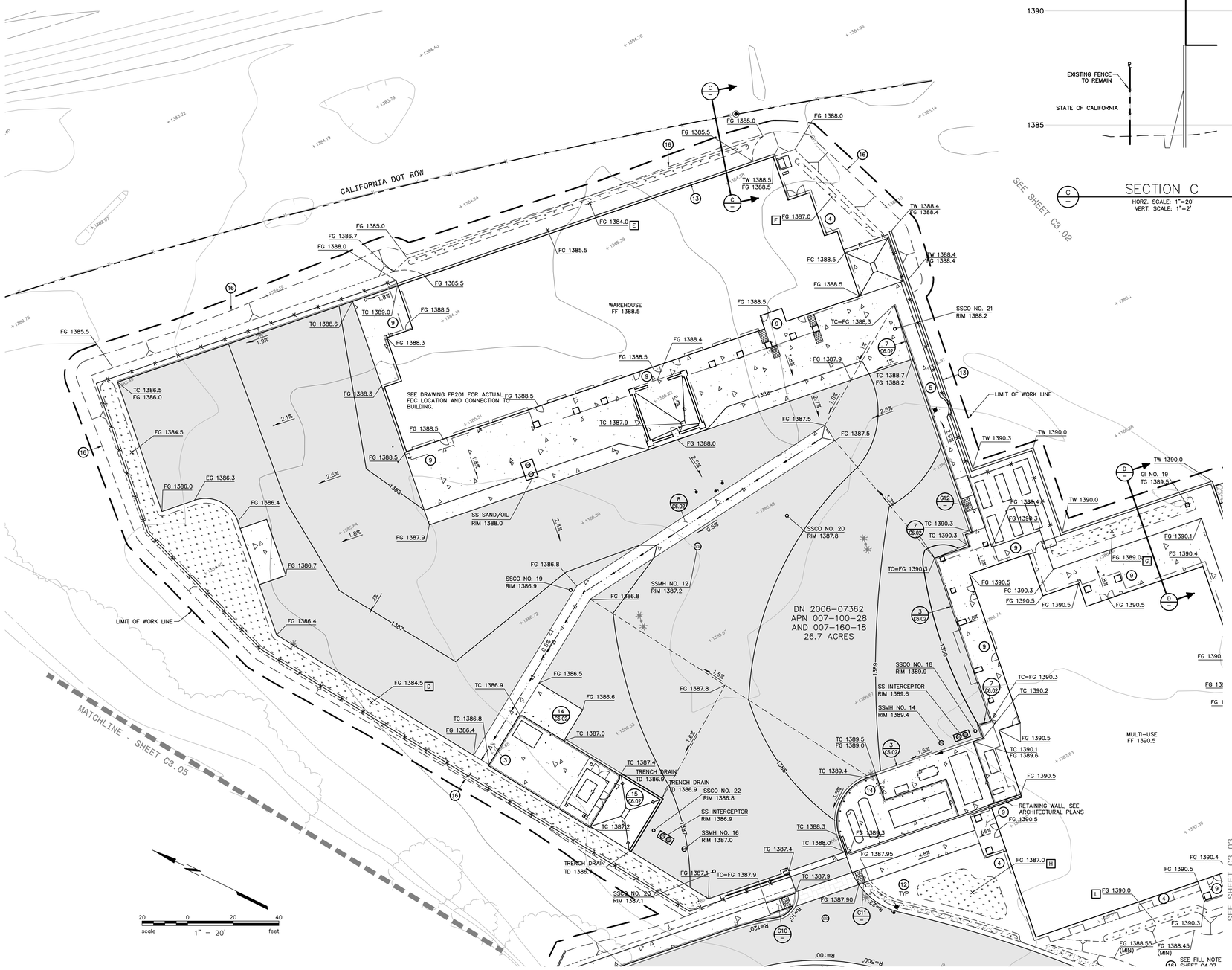

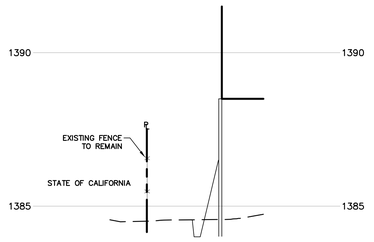

SECTION C
HORZ. SCALE: 1"=20'
VERT. SCALE: 1"=2'

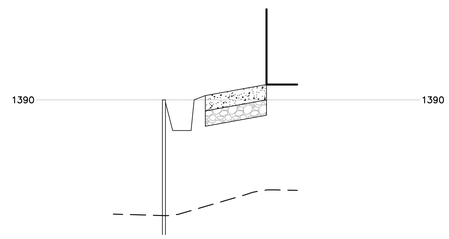

SECTION D
HORZ. SCALE: 1"=20'
VERT. SCALE: 1"=2'

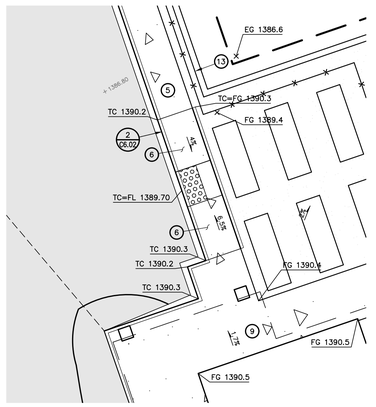

GRADING AREA 12

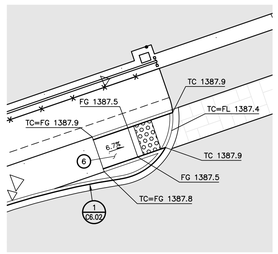

GRADING AREA 10

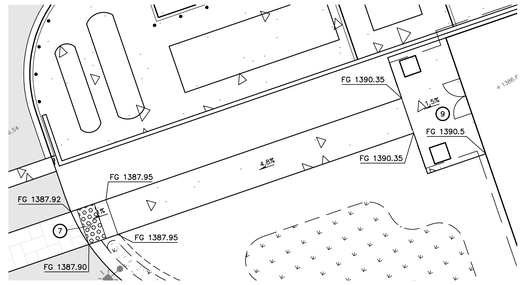

GRADING AREA 11

KEYNOTES

2. ALL GRADING SHALL CONFORM TO GEOTECHNICAL REPORT PREPARED BY SHN ENGINEERS & GEOLOGISTS ON MAY 2018 REMOVE EXISTING MATERIAL AS REQUIRED TO PROVIDE A LAYER OF GEOSYNTHETIC FABRIC AND A 1-FOOT THICK BLANKET OF CALTRANS CLASS II ROCK SLOPE PROTECTION IN ACCORDANCE WITH CALTRANS 2018 STANDARD SPECIFICATIONS SECTION 72-2. SEE DETAIL SO/C6.02
3. THIS PATH SERVES AS AN OVERLAND DRAINAGE RELEASE AND SHALL NOT BE BLOCKED WITH CONSTRUCTION IMPROVEMENTS.
4. SLOPE SURFACE AT A GRADIENT OF AT LEAST 5-PERCENT FOR A MINIMUM DISTANCE OF 10-FEET SO THAT WATER DRAINS AWAY FROM THE BUILDING IN ACCORDANCE WITH SECTION 1804.4 OF THE 2019 CALIFORNIA BUILDING CODE.
5. PEDESTRIAN WALKWAY HAVING A CROSS SLOPE WHICH DOES NOT EXCEED 2-PERCENT IN ACCORDANCE WITH SECTION 11B-403.3 OF THE 2019 CALIFORNIA BUILDING CODE.
6. PEDESTRIAN CURB RAMP AND DETECTABLE WARNING SURFACE IN ACCORDANCE WITH SECTION 11B-406 OF THE 2019 CALIFORNIA BUILDING CODE.
7. DETECTABLE WARNING SURFACE IN ACCORDANCE WITH SECTION 11B-705.1 OF THE 2019 CALIFORNIA BUILDING CODE.
8. PEDESTRIAN RAMP IN ACCORDANCE WITH SECTION 11B-405 OF THE 2019 CALIFORNIA BUILDING CODE. REFER TO THE ARCHITECTURAL DRAWINGS FOR HANDRAILS AND ADDITIONAL INFORMATION.
9. SLOPE SURFACE AT A GRADIENT NOT EXCEEDING 2-PERCENT TO PROVIDE AN ACCESSIBLE PATH OF TRAVEL IN ACCORDANCE WITH SECTION 11B-403.3 OF THE 2019 CALIFORNIA BUILDING CODE (CBC) WHILE PROVIDING DRAINAGE AWAY FROM THE BUILDING IN ACCORDANCE WITH SECTION 1804.4 OF THE CBC.
10. LANDING HAVING A SLOPE WHICH DOES NOT EXCEED 2-PERCENT IN ANY DIRECTION IN ACCORDANCE WITH SECTION 11B-404.2.4.4 OF THE 2019 CALIFORNIA BUILDING CODE.
11. CONFORM TO EXISTING SURFACE ELEVATION IN A MANNER WHICH GENERATES A UNIFORM TRANSITION BETWEEN SURFACES AND DOES NOT IMPEDE DRAINAGE.
12. BACKFILL NEW IMPROVEMENTS TO THE LINES AND ELEVATIONS SHOWN WITH SOIL SUITABLE FOR PLANTING IN A MANNER WHICH GENERATES A UNIFORM TRANSITION BETWEEN SURFACES AND PROVIDES POSITIVE DRAINAGE AWAY FROM STRUCTURES. PROVIDE MATERIAL SEPARATION IN ACCORDANCE WITH SECTION 1404.10.1.3 OF THE 2019 CALIFORNIA BUILDING CODE.
13. RETAINING WALL. REFER TO THE ARCHITECTURAL DRAWINGS. BLOCK OUT THE TOP OF WALL AT LOCATIONS APPROVED BY THE ARCHITECT AND OWNER AND IN A MANNER WHICH AVOIDS UTILITIES WITHIN THE WALL TO ALLOW STORM WATER TO PASS OVER THE WALL.
14. CONCRETE SLAB TO ACCOMMODATE THE TRASH ENCLOSURE. COORDINATE THE LOCATION OF TRASH ENCLOSURE FOOTINGS PRIOR TO POURING THE CONCRETE SLAB AND CURB AND GUTTER IN THE VICINITY OF THE TRASH ENCLOSURE.
15. COORDINATE WITH THE OWNER OF THIS UTILITY TO HAVE THEM HOLD THE UTILITY POLE IN PLACE WHILE CONDUCTING IMPROVEMENTS IN THIS AREA.
16. APPROXIMATE LIMIT OF GRADING.

IDENTIFICATION STAMP
DIV. OF THE STATE ARCHITECT
APP: 02-118630 INC:
REVIEWED FOR
SS ☐ FLS ☐ ACS ☑
DATE: 04/13/2021

OFFICE OF THE STATE FIRE MARSHAL
APPROVED FIRE AND PANIC ONLY
Approval of this plan does not authorize or approve any omission or deviation from applicable regulations. Final approval is subject to field inspection. One set of approved plans shall be available on the project site at all times.
PERMIT NO. 20-N-2332-CP
REVIEWED BY: LEO CATAYLO, OSFM
DATE: 4 / /2021

DGS GENERAL SERVICES
Department of General Services
State of California
Real Estate Services Division
Project Management & Development Branch
707 Third Street, Suite 4-105
West Sacramento, California 95605

NICHOLS MELBURG & ROSSETTO
ARCHITECTS + ENGINEERS
300 Knollcrest Drive
Redding, CA 96002
(530) 222-3300 (530) 222-3538 FAX
http://www.nmrdesign.com

Copyright © 2021
All ideas, designs, arrangements and plans indicated or represented by this drawing are owned by, and the property of, NICHOLS, MELBURG and ROSSETTO and were created, evolved and developed for use on, and in conjunction with, the specified project. None of such ideas, designs, arrangements or plans shall be used by, or disclosed to any person, firm or corporation for any purpose whatsoever without the written permission of NICHOLS, MELBURG and ROSSETTO.

LICENSE STAMPS

REGISTERED PROFESSIONAL ENGINEER
GREGOORY H. JENNINGS
No. C-68337
CIVIL
STATE OF CALIFORNIA
3/25/2021

CONSULTANT

BKF
200 4th STREET
SUITE 300
SANTA ROSA, CA 95401
(707) 583-8500
www.bkf.com

DRAWING STATUS

CONSTRUCTION DOCUMENTS

ISSUE

No.	Date	Description
1	10/22/2020	INITIAL PLAN REVIEW
2	01/08/2021	AGENCY RESUBMITTAL
3	03/22/2021	AGENCY RESUBMITTAL

If drawing is not 30" x 42" it is a reduced print

PROJECT

RESIDENTIAL CENTER, UKIAH: REPLACEMENT OF EXISTING RESIDENTIAL CENTER

440 EAST HILL ROAD
WILLITS, CALIFORNIA, 95490
MENDOCINO COUNTY
CALIFORNIA CONSERVATION CORPS

Supervisor	Designed	Drawn
RFC	GHJ	BRL

DSA Application No.
02-118630

SHEET TITLE

GRADING PLAN
WAREHOUSE, STORAGE AND PARKING AREA

DGS Project Number: 0000000000001826
NMR Project Number: 18-6456

Reference North: NORTH
Sheet Scale: AS SHOWN
Sheet Number: C3.04

ISSUE DATE
July 9, 2021

Login Name: tjd1
Plot Date: March 19, 2021 - 6:06 pm
File Name: K:\2018\181957_CCC_Willits_Residential_Center\dwg\181957_SITE.dwg
XREFS: XL_OPO | 181957_SDWK | 181957_COMM | +-MRG-Site | +-MRG-TOPO | +-MRG-ALTA | Ukiah_WetlandCreation_20200923

KEYNOTES

(3) THIS PATH SERVES AS AN OVERLAND DRAINAGE RELEASE AND SHALL NOT BE BLOCKED WITH CONSTRUCTION IMPROVEMENTS.

(6) PEDESTRIAN CURB RAMP AND DETECTABLE WARNING SURFACE IN ACCORDANCE WITH SECTION 11B-406 OF THE 2019 CALIFORNIA BUILDING CODE.

(12) BACKFILL NEW IMPROVEMENTS TO THE LINES AND ELEVATIONS SHOWN WITH SOIL SUITABLE FOR PLANTING IN A MANNER WHICH GENERATES A UNIFORM TRANSITION BETWEEN SURFACES AND PROVIDES POSITIVE DRAINAGE AWAY FROM STRUCTURES. PROVIDE MATERIAL SEPARATION IN ACCORDANCE WITH SECTION 1404.10.1.3 OF THE 2019 CALIFORNIA BUILDING CODE.

(16) APPROXIMATE LIMIT OF GRADING.

SEE SHEET G400 FOR LOCATIONS OF EXISTING WETLANDS TO REMAIN, EXISTING WETLANDS TO BE IMPACTED BY GRADING AND NEW MITIGATION WETLANDS TO BE CREATED BY NEW GRADING AND PLANTING WORK

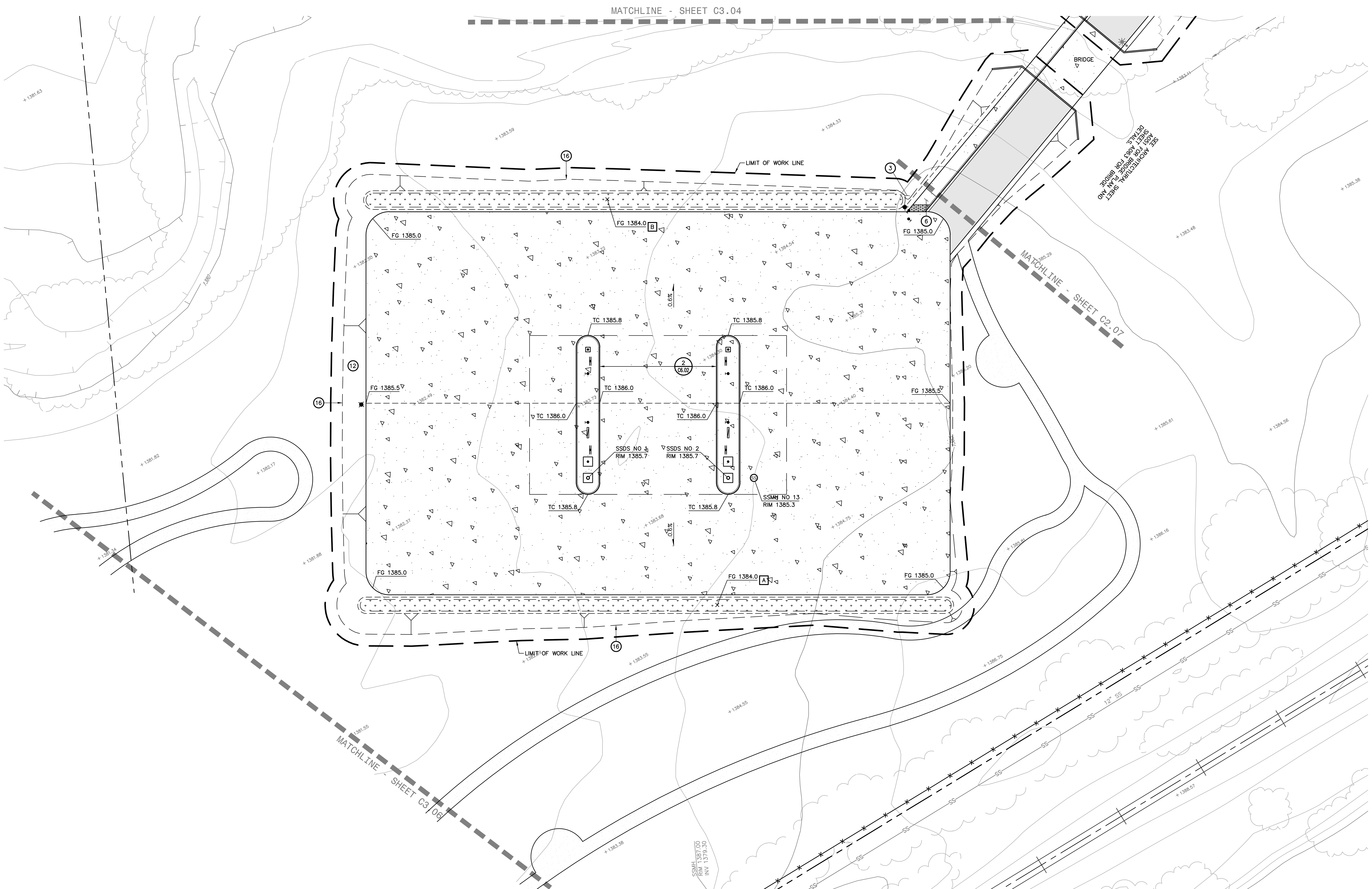

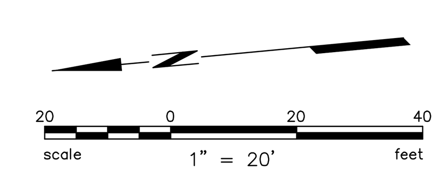

IDENTIFICATION STAMP
DIV. OF THE STATE ARCHITECT
APP: 02-118630 INC:
REVIEWED FOR
SS ☐ FLS ☐ ACS ☑
DATE: 04/13/2021

OFFICE OF THE STATE FIRE MARSHAL
APPROVED FIRE AND PANIC ONLY
Approval of this plan does not authorize or approve any omission or deviation from applicable regulations. Final approval is subject to field inspection. One set of approved plans shall be available on the project site at all times.
PERMIT NO.: 20-N-2332-CP
REVIEWED BY: LITO CATAYLO, OSFM
DATE: 3/ 1 /2021

DGS
GENERAL SERVICES
Department of General Services
State of California
Real Estate Services Division
Project Management & Development Branch
707 Third Street, Suite 4-105
West Sacramento, California 95605

NM&R
NICHOLS MELBURG & ROSSETTO
ARCHITECTS + ENGINEERS
300 Knollcrest Drive
Redding, CA. 96002
(530) 222-3300 (530) 222-3538 FAX
http://www.nmrdesign.com

Copyright © 2021
All ideas, designs, arrangements and plans indicated or represented by this drawing are owned by, and the property of, NICHOLS, MELBURG and ROSSETTO and were created, evolved and developed for use on, and in conjunction with, the specified project. None of such ideas, designs, arrangements or plans shall be used by, or disclosed to any person, firm or corporation for any purpose whatsoever without the written permission of NICHOLS, MELBURG and ROSSETTO.

LICENSE STAMPS
REGISTERED PROFESSIONAL ENGINEER
GREGGORY H. JENNINGS
No. C-68337
CIVIL
STATE OF CALIFORNIA
3/25/2021

CONSULTANT

BKF
200 4th STREET
SUITE 300
SANTA ROSA, CA 95401
(707) 583-8500
www.bkf.com

DRAWING STATUS
CONSTRUCTION DOCUMENTS

ISSUE

No.	Date	Description
1	10/22/2020	INITIAL PLAN REVIEW
2	01/08/2021	AGENCY RESUBMITTAL
3	03/22/2021	AGENCY RESUBMITTAL

If drawing is not 30" x 42" it is a reduced print

PROJECT
RESIDENTIAL CENTER, UKIAH: REPLACEMENT OF EXISTING RESIDENTIAL CENTER
440 EAST HILL ROAD
WILLITS, CALIFORNIA, 95490
MENDOCINO COUNTY
CALIFORNIA CONSERVATION CORPS

Supervisor	Designed	Drawn
RFC	GHJ	BRL

DSA Application No.
02-118630

SHEET TITLE
GRADING PLAN
CREW STAGING AREA

DGS Project Number
000000000001826
NMR Project Number
18-6456

Reference North
NORTH

Sheet Scale
AS SHOWN

Sheet Number
C3.05

ISSUE DATE
July 9, 2021

Login Name: tipt
Plot Date: March 19, 2021 - 6:03 pm
File Name: K:\2018\181957_CCC_Willits_Residential_Center\dwg\181957_SITE.dwg
XREFS: X_TOPO | 181957_SDRN | 181957_CORR | x-WRC-site | x-WRC-TOPO | x-WRC-ALTA | Ukiah_WetlandCreation_20200923

SEE SHEET G400 FOR LOCATIONS OF EXISTING WETLANDS TO REMAIN, EXISTING WETLANDS TO BE IMPACTED BY GRADING AND NEW MITIGATION WETLANDS TO BE CREATED BY NEW GRADING AND PLANTING WORK

Login Name: tipt
Plot Date: March 19, 2021 - 6:01 pm
File Name: K:\2018\181957_CCC_Willits_Residential_Center\dwg\181957_SITE.dwg
XREFS: X_TOPO | 181957_SDRN | 181957_CORR | x-WRC-site | x-WRC-TOPO | x-WRC-ALTA | Ukiah_WetlandCreation_20200923

IDENTIFICATION STAMP
DIV. OF THE STATE ARCHITECT
APP: 02-118630 INC:
REVIEWED FOR
SS ☐ FLS ☐ ACS ☑
DATE: 04/13/2021

OFFICE OF THE STATE FIRE MARSHAL
APPROVED FIRE AND PANIC ONLY
Approval of this plan does not authorize or approve any omission or deviation from applicable regulations. Final approval is subject to field inspection. One set of approved plans shall be available on the project site at all times.
PERMIT NO.: 20-N-2332-CP
REVIEWED BY: LITO CATAYLO, OSFM
DATE: 4/1/2021

DGS GENERAL SERVICES
Department of General Services
State of California
Real Estate Services Division
Project Management & Development Branch
707 Third Street, Suite 4-105
West Sacramento, California 95605

NICHOLS MELBURG & ROSSETTO
ARCHITECTS + ENGINEERS
300 Knollcrest Drive
Redding, CA. 96002
(530) 222-3300 (530) 222-3538 FAX
http://www.nmrdesign.com

Copyright © 2021
All ideas, designs, arrangements and plans indicated or represented by this drawing are owned by, and the property of, NICHOLS, MELBURG and ROSSETTO and were created, evolved and developed for use on, and in conjunction with, the specified project. None of such ideas, designs, arrangements or plans shall be used by, or disclosed to any person, firm or corporation for any purpose whatsoever without the written permission of NICHOLS, MELBURG and ROSSETTO.

LICENSE STAMPS

REGISTERED PROFESSIONAL ENGINEER
GREGGORY H. JENNINGS
No. C-68337
CIVIL
STATE OF CALIFORNIA
3/25/2021

CONSULTANT

BKF
200 4th STREET
SUITE 300
SANTA ROSA, CA 95401
(707) 583-8500
www.bkf.com

DRAWING STATUS

CONSTRUCTION DOCUMENTS

ISSUE

No.	Date	Description
1	10/22/2020	INITIAL PLAN REVIEW
2	01/08/2021	AGENCY RESUBMITTAL
3	03/22/2021	AGENCY RESUBMITTAL

If drawing is not 30" x 42" it is a reduced print

PROJECT

RESIDENTIAL CENTER, UKIAH: REPLACEMENT OF EXISTING RESIDENTIAL CENTER

440 EAST HILL ROAD
WILLITS, CALIFORNIA, 95490
MENDOCINO COUNTY
CALIFORNIA CONSERVATION CORPS

Supervisor	Designed	Drawn
RFC	GHJ	BRL

DSA Application No.
02-118630

SHEET TITLE

GRADING PLAN
SOLAR AREA AND
EXERCISE TRAIL

DGS Project Number	NMR Project Number
000000000001826	18-6456

Reference North: NORTH

Sheet Scale: AS SHOWN

Sheet Number: C3.06

ISSUE DATE

July 9, 2021

REFER TO PP SHEETS FOR THE DESIGN AND DETAILING OF UTILTIES LOCATED WITHIN ROADWAYS, UTILITY SIZE HAS BEEN SHOWN FOR CLARITY.

KEYNOTES

(20) INSTALL STORM DRAIN OUTFALL (SO). REFER TO DETAIL SO ON SHEET C6.02.

(23) FIRE HYDRANT AND LATERAL ASSEMBLY IN ACCORDANCE WITH CITY OF WILLITS STANDARD 502.

(29) SANITARY SEWER LATERAL AND TWO-WAY SANITARY SEWER CLEANOUTS WHERE SHOWN ON PLAN IN ACCORDANCE WITH CHAPTER 7 OF THE 2019 CALIFORNIA PLUMBING CODE AND CITY OF WILLITS STANDARDS 309 AND 310.

(42) COORDINATE THE LOCATION AND SIZE OF THIS UTILITY WITH THE BUILDING CONTRACTOR AND CONNECT THE SITE UTILITY TO THE BUILDING PLUMBING SYSTEM. PROVIDE CONTROLLED DENSITY FILL (CDF) OR EQUIVALENT IMPERMEABLE TRENCH BACKFILL IMMEDIATELY OUTSIDE OF THE BUILDING TO PREVENT WATER INTRUSION.

(43) THIS UTILITY HAS BEEN SHOWN FOR REFERENCE AND COORDINATION PURPOSES ONLY. REFER TO THE JOINT TRENCH / ELECTRICAL DRAWINGS.

(44) CONFIRM FIRE SERVICE SIZE WITH THE BUILDING SPRINKLER CONTRACTOR PRIOR TO INSTALLATION.

(FD) INSTALL FIRE DEPARTMENT CONNECTION (FDC). SEE DETAIL FD, SHEET C6.02

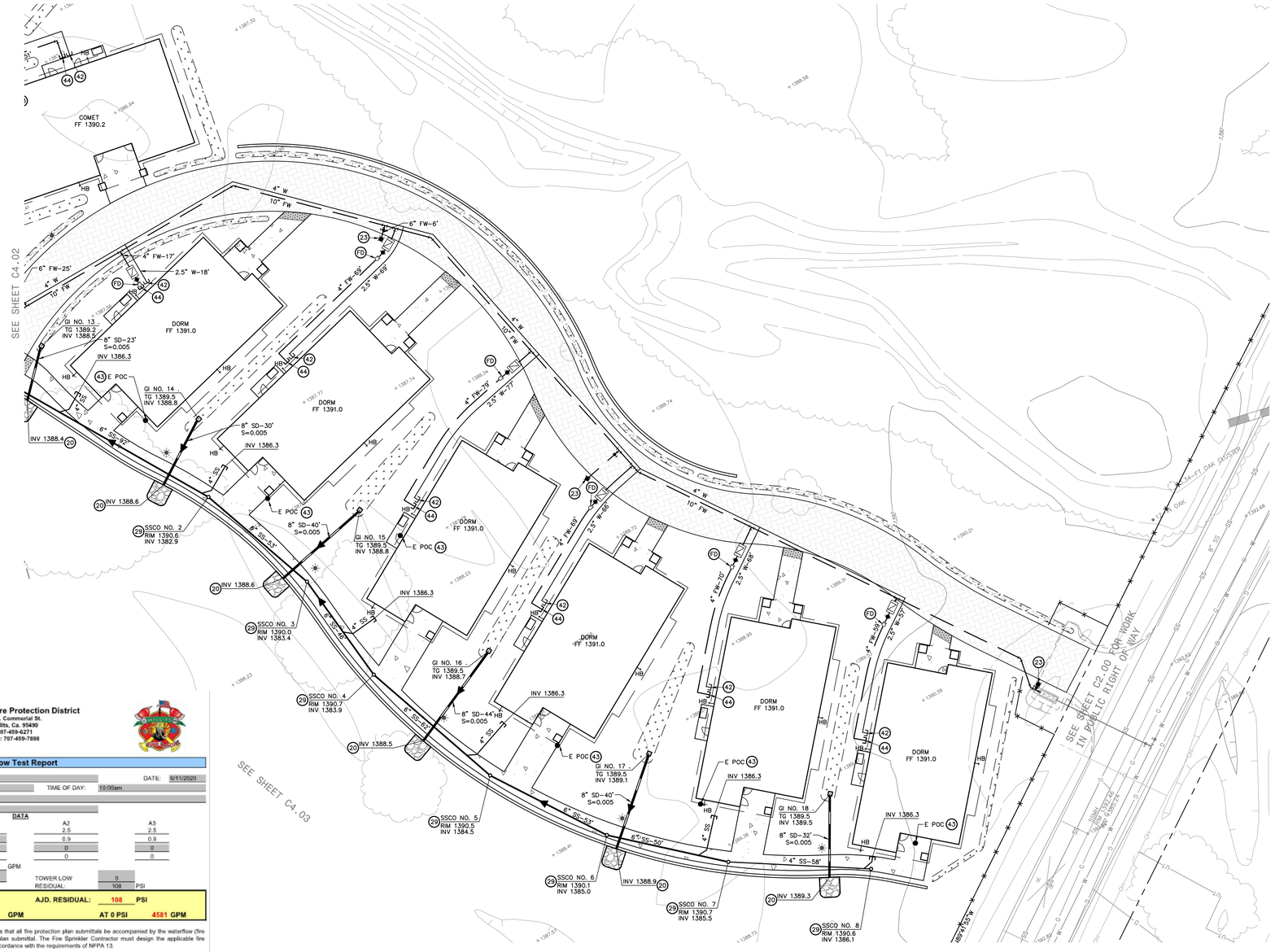

Little Lake Fire Protection District
74 E. Commerial St.
Willits, Ca. 95490
707-459-6271
Fax: 707-459-7898

Water Flow Test Report

LOCATION	APN 007-160-18 (Proposed CCC Project)		DATE: 6/11/2020
TEST BY:	Chris Wilkes	TIME OF DAY:	10:00am
WATER SUPPLIED BY:	City of Willits		
PURPOSE OF TEST:	Fire Sprinkler Design		

DATA

FLOW HYDRANT(S)	A1	A2	A3
SIZE OPENING:	2.5	2.5	2.5
COEFFICIENT:	0.9	0.9	0.9
PITOT READING:	62	0	0
GPM:	1321	0	0

TOTAL FLOW DURING TEST: 1321 GPM

TOWER LEVEL @ TIME OF TEST: TOWER LOW 0
STATIC READING: 120 PSI RESIDUAL: 108 PSI

ADJ. STATIC: 120 PSI **ADJ. RESIDUAL: 108 PSI**

ADJ. FLOW: AT 20 PSI RESIDUAL 4152 GPM AT 0 PSI 4581 GPM

Please be advised that the Little Lake Fire Protection District requires that all fire protection plan submittals be accompanied by the waterflow (fire hydrant flow) test information. This report must be included with plan submittal. The Fire Sprinkler Contractor must design the applicable fire sprinkler system, based on the minimum water supply available, in accordance with the requirements of NFPA 13.

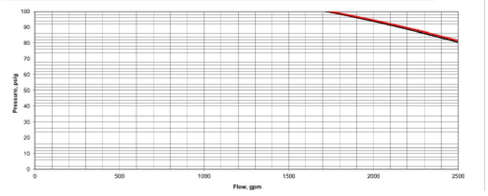

Login Name: lgt
Plot Date: March 19, 2021 - 6:16 pm
File Name: C:\Temp\AdPublish_12720\18957_SITE.dwg
XREFS: X_DRG | 18957_SBN | 18957_SDN | x-WRC-site | x-WRC-TOPO | x-WRC-ALTA | Ukiah_WetlandCreation_20200923

IDENTIFICATION STAMP
DIV. OF THE STATE ARCHITECT
APP: 02-118630 INC:
REVIEWED FOR
SS ☐ FLS ☐ ACS ☑
DATE: 04/13/2021

OFFICE OF THE STATE FIRE MARSHAL
APPROVED FIRE AND PANIC ONLY
Approval of this plan does not authorize or approve any omission or deviation from applicable regulations. Final approval is subject to field inspection. One set of approved plans shall be available on the project site at all times.
PERMIT NO. 20-N-2332-CP
REVIEWED BY: LEO CATAYLO, OSFM
DATE: 4 / /2021

GENERAL SERVICES
Department of General Services
State of California
Real Estate Services Division
Project Management & Development Branch
707 Third Street, Suite 4-105
West Sacramento, California 95605

NICHOLS MELBURG & ROSSETTO
ARCHITECTS + ENGINEERS
300 Knollcrest Drive
Redding, CA. 96002
(530) 222-3300 (530) 222-3538 FAX
http://www.nmrdesign.com

Copyright © 2021
All ideas, designs, arrangements and plans indicated or represented by this drawing are owned by, and the property of, NICHOLS, MELBURG and ROSSETTO and were created, evolved and developed for use on, and in conjunction with, the specified project. None of such ideas, designs, arrangements or plans shall be used by, or disclosed to any person, firm or corporation for any purpose whatsoever without the written permission of NICHOLS, MELBURG and ROSSETTO.

LICENSE STAMPS

REGISTERED PROFESSIONAL ENGINEER
GREGGORY H. JENNINGS
No. C-68337
CIVIL
STATE OF CALIFORNIA
3/25/2021

CONSULTANT

BKF
200 4th STREET
SUITE 300
SANTA ROSA, CA 95401
(707) 583-8500
www.bkf.com

DRAWING STATUS
CONSTRUCTION DOCUMENTS

ISSUE

No.	Date	Description
1	10/22/2020	INITIAL PLAN REVIEW
2	01/08/2021	AGENCY RESUBMITTAL
3	03/22/2021	AGENCY RESUBMITTAL

If drawing is not 30" x 42" it is a reduced print

PROJECT
RESIDENTIAL CENTER, UKIAH: REPLACEMENT OF EXISTING RESIDENTIAL CENTER
440 EAST HILL ROAD
WILLITS, CALIFORNIA, 95490
MENDOCINO COUNTY
CALIFORNIA CONSERVATION CORPS

Supervisor	Designed	Drawn
RFC	GHJ	BRL

DSA Application No.
02-118630

SHEET TITLE
UTILITY PLAN
HOUSING AREA

DGS Project Number: 0000000000001826
NMR Project Number: 18-6456

Reference North: NORTH
Sheet Scale: AS SHOWN
Sheet Number: C4.01

ISSUE DATE
July 9, 2021

REFER TO PP SHEETS FOR THE DESIGN AND DETAILING OF UTILTIES LOCATED WITHIN ROADWAYS, UTILITY SIZE HAS BEEN SHOWN FOR CLARITY.

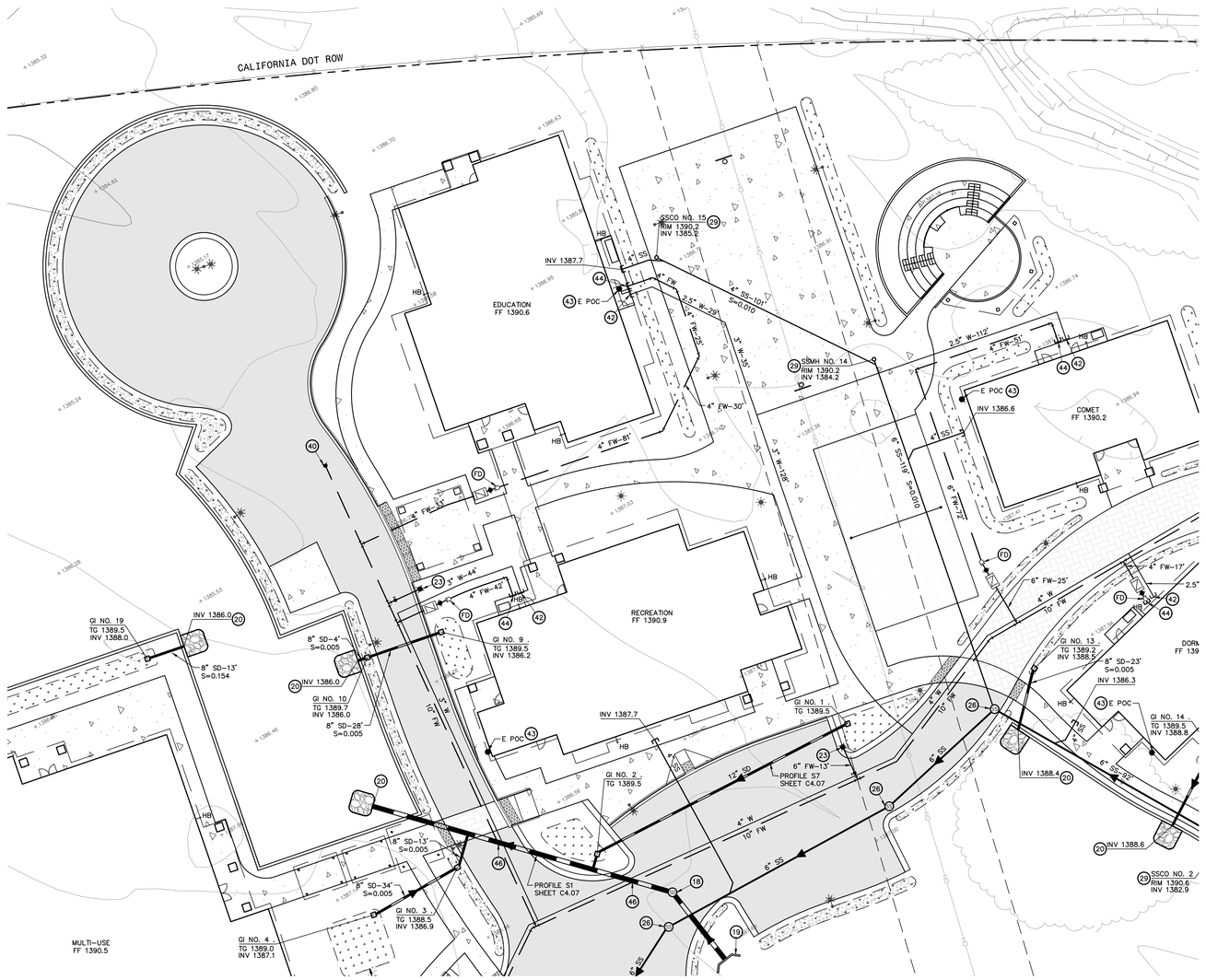

KEYNOTES

(18) STORM DRAIN MANHOLE IN ACCORDANCE WITH CITY OF WILLITS STANDARD 400 HAVING A TRAFFIC RATED FRAME AND COVER IN ACCORDANCE WITH CITY OF WILLITS STANDARD 401.

(20) INSTALL STORM DRAIN OUTFALL (SO). REFER TO DETAIL SO ON SHEET C6.02.

(23) FIRE HYDRANT AND LATERAL ASSEMBLY IN ACCORDANCE WITH CITY OF WILLITS STANDARD 502.

(26) SANITARY SEWER MANHOLE IN ACCORDANCE WITH CITY OF WILLITS STANDARD 301 HAVING A TRAFFIC RATED FRAME AND COVER IN ACCORDANCE WITH CITY OF WILLITS STANDARD 303.

(29) SANITARY SEWER LATERAL AND TWO-WAY SANITARY SEWER CLEANOUTS WHERE SHOWN ON PLAN IN ACCORDANCE WITH CHAPTER 7 OF THE 2019 CALIFORNIA PLUMBING CODE AND CITY OF WILLITS STANDARDS 309 AND 310.

(35) COMBINATION WATER SERVICE IN ACCORDANCE WITH CITY OF WILLITS STANDARD 513 HAVING A 4-INCH MULTI-SERVICE MANIFOLD.

(40) WATER MAIN FULL SIZE BLOW OFF IN ACCORDANCE WITH CITY OF WILLITS STANDARD 516.

(42) COORDINATE THE LOCATION AND SIZE OF THIS UTILITY WITH THE BUILDING CONTRACTOR AND CONNECT THE SITE UTILITY TO THE BUILDING PLUMBING SYSTEM. PROVIDE CONTROLLED DENSITY FILL (CDF) OR EQUIVALENT IMPERMEABLE TRENCH BACKFILL IMMEDIATELY OUTSIDE OF THE BUILDING TO PREVENT WATER INTRUSION.

(43) THIS UTILITY HAS BEEN SHOWN FOR REFERENCE AND COORDINATION PURPOSES ONLY. REFER TO THE JOINT TRENCH / ELECTRICAL DRAWINGS.

(44) CONFIRM FIRE SERVICE SIZE WITH THE BUILDING SPRINKLER CONTRACTOR PRIOR TO INSTALLATION.

(46) WATER MAIN LOWERING IN ACCORDANCE WITH CITY OF WILLITS STANDARD 528. PROVIDE A MINIMUM OF 1-FT CLEAR. MECHANICALLY RESTRAIN ALL JOINTS. THRUST BLOCKS ARE NOT ALLOWED.

(FD) INSTALL FIRE DEPARTMENT CONNECTION (FDC). SEE DETAIL FD, SHEET C6.02

20 0 20 40
scale 1" = 20' feet

IDENTIFICATION STAMP
DIV. OF THE STATE ARCHITECT
APP: 02-118630 INC:
REVIEWED FOR
SS ☐ FLS ☐ ACS ☑
DATE: 04/13/2021

OFFICE OF THE STATE FIRE MARSHAL
APPROVED FIRE AND PANIC ONLY
Approval of this plan does not authorize or approve any omission or deviation from applicable regulations. Final approval is subject to field inspection. One set of approved plans shall be available on the project site at all times.
PERMIT NO. 20-N-2332-CP
REVIEWED BY: LEO CATAYLO, OSFM
DATE: 4 / /2021

GENERAL SERVICES
Department of General Services
State of California
Real Estate Services Division
Project Management & Development Branch
707 Third Street, Suite 4-105
West Sacramento, California 95605

NICHOLS MELBURG & ROSSETTO
ARCHITECTS + ENGINEERS
300 Knollcrest Drive
Redding, CA. 96002
(530) 222-3300 (530) 222-3538 FAX
http://www.nmrdesign.com

Copyright © 2021
All ideas, designs, arrangements and plans indicated or represented by this drawing are owned by, and the property of, NICHOLS, MELBURG and ROSSETTO and were created, evolved and developed for use on, and in conjunction with, the specified project. None of such ideas, designs, arrangements or plans shall be used by, or disclosed to any person, firm or corporation for any purpose whatsoever without the written permission of NICHOLS, MELBURG and ROSSETTO.

LICENSE STAMPS

REGISTERED PROFESSIONAL ENGINEER
GREGORY H. JENNINGS
No. C-68337
CIVIL
STATE OF CALIFORNIA
3/25/2021

CONSULTANT

BKF
200 4th STREET
SUITE 300
SANTA ROSA, CA 95401
(707) 583-8500
www.bkf.com

DRAWING STATUS

CONSTRUCTION DOCUMENTS

ISSUE

No.	Date	Description
1	10/22/2020	INITIAL PLAN REVIEW
2	01/08/2021	AGENCY RESUBMITTAL
3	03/22/2021	AGENCY RESUBMITTAL

If drawing is not 30" x 42" it is a reduced print

PROJECT

RESIDENTIAL CENTER, UKIAH: REPLACEMENT OF EXISTING RESIDENTIAL CENTER

440 EAST HILL ROAD
WILLITS, CALIFORNIA, 95490
MENDOCINO COUNTY
CALIFORNIA CONSERVATION CORPS

Supervisor	Designed	Drawn
RFC	GHJ	BRL

DSA Application No.
02-118630

SHEET TITLE

UTILITY PLAN
RECREATION AREA

DGS Project Number
0000000000001826

NMR Project Number
18-6456

Reference North: NORTH

Sheet Scale
AS SHOWN

Sheet Number
C4.02

ISSUE DATE
July 9, 2021

Login Name: tlpl
Plot Date: March 19, 2021 - 6:21 pm
File Name: C:\Temp\AcPublish_7720\18957_SITE.dwg
XREFS: A_TOPO | 18957_SOMA | 18957_SOMA | x-NRC-site | x-NRC-TOPO | x-NRC-ALTA | Ukiah_WetlandCreation_20200923

REFER TO PP SHEETS FOR THE DESIGN AND DETAILING OF UTILTIES LOCATED WITHIN ROADWAYS, UTILITY SIZE HAS BEEN SHOWN FOR CLARITY.

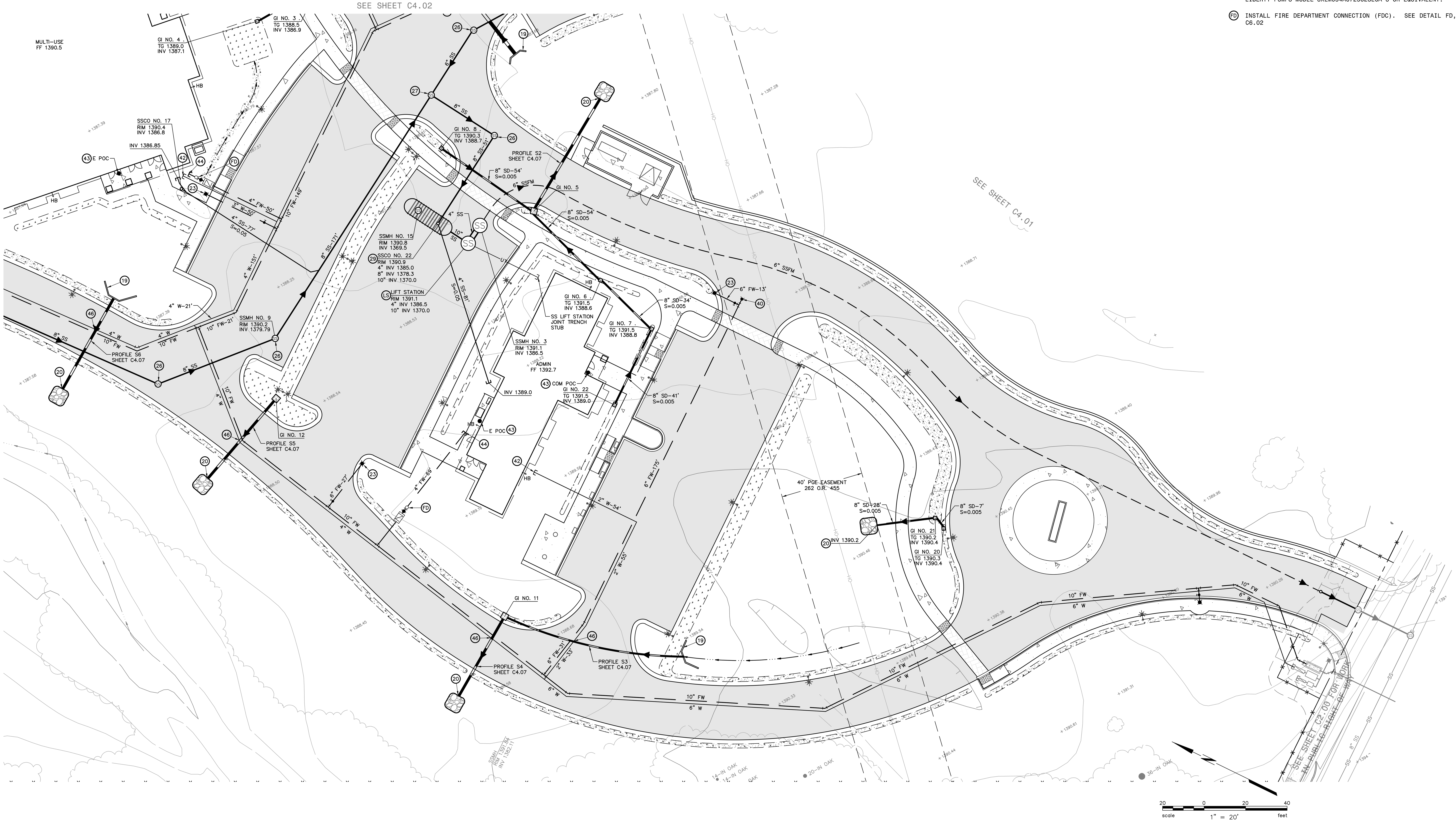

KEYNOTES

(19) HEADWALL IN ACCORDANCE WITH CALTRANS 2018 STANDARD PLAN D89.

(20) INSTALL STORM DRAIN OUTFALL (SO). REFER TO DETAIL SO ON SHEET C6.02.

(23) FIRE HYDRANT AND LATERAL ASSEMBLY IN ACCORDANCE WITH CITY OF WILLITS STANDARD 502.

(26) SANITARY SEWER MANHOLE IN ACCORDANCE WITH CITY OF WILLITS STANDARD 301 HAVING A TRAFFIC RATED FRAME AND COVER IN ACCORDANCE WITH CITY OF WILLITS STANDARD 303.

(27) SANITARY SEWER DROP MANHOLE IN ACCORDANCE WITH CITY OF WILLITS STANDARD 304 HAVING A TRAFFIC RATED FRAME AND COVER IN ACCORDANCE WITH CITY OF WILLITS STANDARD 301.

(29) SANITARY SEWER LATERAL AND TWO-WAY SANITARY SEWER CLEANOUTS WHERE SHOWN ON PLAN IN ACCORDANCE WITH CHAPTER 7 OF THE 2019 CALIFORNIA PLUMBING CODE AND CITY OF WILLITS STANDARDS 309 AND 310.

(36) 4-INCH DOMESTIC WATER SERVICE WITH A 4-INCH METER IN ACCORDANCE WITH CITY OF WILLITS STANDARD 507 AND 4-INCH REDUCED PRESSURE BACKFLOW PREVENTION DEVICE WITH FROST PROTECTION BLANKET FOR THE DOMESTIC WATER SERVICE IN ACCORDANCE WITH CITY OF WILLITS STANDARD 510.

(40) WATER MAIN FULL SIZE BLOW OFF IN ACCORDANCE WITH CITY OF WILLITS STANDARD 516.

(42) COORDINATE THE LOCATION AND SIZE OF THIS UTILITY WITH THE BUILDING CONTRACTOR AND CONNECT THE SITE UTILITY TO THE BUILDING PLUMBING SYSTEM. PROVIDE CONTROLLED DENSITY FILL (CDF) OR EQUIVALENT IMPERMEABLE TRENCH BACKFILL IMMEDIATELY OUTSIDE OF THE BUILDING TO PREVENT WATER INTRUSION.

(43) THIS UTILITY HAS BEEN SHOWN FOR REFERENCE AND COORDINATION PURPOSES ONLY. REFER TO THE JOINT TRENCH / ELECTRICAL DRAWINGS.

(44) CONFIRM FIRE SERVICE SIZE WITH THE BUILDING SPRINKLER CONTRACTOR PRIOR TO INSTALLATION.

(46) WATER MAIN LOWERING IN ACCORDANCE WITH CITY OF WILLITS STANDARD 528. PROVIDE A MINIMUM OF 1-FT CLEAR. MECHANICALLY RESTRAIN ALL JOINTS. THRUST BLOCKS ARE NOT ALLOWED.

(LS) DUPLEX GRINDER PUMP PACKAGE WITH AN 8-FOOT DIAMETER FIBERGLASS BASIN, XERXES MODEL S10-875.03 OR EQUIVALENT WITH A DUBLEX PUMP, LIBERTY PUMPS MODEL 3XLM054A0725C2SECA-3 OR EQUIVALENT.

(FD) INSTALL FIRE DEPARTMENT CONNECTION (FDC). SEE DETAIL FD, SHEET C6.02

IDENTIFICATION STAMP
DIV. OF THE STATE ARCHITECT
APP: 02-118630 INC:
REVIEWED FOR
SS ☐ FLS ☐ ACS ☑
DATE: 04/13/2021

OFFICE OF THE STATE FIRE MARSHAL
APPROVED FIRE AND PANIC ONLY
Approval of this plan does not authorize or approve any omission or deviation from applicable regulations. Final approval is subject to field inspection. One set of approved plans shall be available on the project site at all times.
PERMIT NO.: 20-N-2332-CP
REVIEWED BY: LITO CATAYLO, OSFM
DATE: 4/1/2021

DGS GENERAL SERVICES
Department of General Services
State of California
Real Estate Services Division
Project Management & Development Branch
707 Third Street, Suite 4-105
West Sacramento, California 95605

NICHOLS MELBURG & ROSSETTO
ARCHITECTS + ENGINEERS
300 Knollcrest Drive
Redding, CA. 96002
(530) 222-3300 (530) 222-3538 FAX
http://www.nmrdesign.com

Copyright © 2021
All ideas, designs, arrangements and plans indicated or represented by this drawing are owned by, and the property of, NICHOLS, MELBURG and ROSSETTO and were created, evolved and developed for use on, and in conjunction with, the specified project. None of such ideas, designs, arrangements or plans shall be used by, or disclosed to any person, firm or corporation for any purpose whatsoever without the written permission of NICHOLS, MELBURG and ROSSETTO.

LICENSE STAMPS

REGISTERED PROFESSIONAL ENGINEER
GREGGORY H. JENNINGS
No. C-68337
CIVIL
STATE OF CALIFORNIA
3/25/2021

CONSULTANT

BKF
200 4th STREET
SUITE 300
SANTA ROSA, CA 95401
(707) 583-8500
www.bkf.com

DRAWING STATUS

CONSTRUCTION DOCUMENTS

ISSUE

No.	Date	Description
1	10/22/2020	INITIAL PLAN REVIEW
2	01/08/2021	AGENCY RESUBMITTAL
3	03/22/2021	AGENCY RESUBMITTAL

If drawing is not 30" x 42" it is a reduced print

PROJECT

RESIDENTIAL CENTER, UKIAH: REPLACEMENT OF EXISTING RESIDENTIAL CENTER

440 EAST HILL ROAD
WILLITS, CALIFORNIA, 95490
MENDOCINO COUNTY
CALIFORNIA CONSERVATION CORPS

Supervisor	Designed	Drawn
RFC	GHJ	BRL

DSA Application No.
02-118630

SHEET TITLE

UTILITY PLAN
ADMIN AND PARKING

DGS Project Number 000000000001826
NMR Project Number 18-6456

Reference North: NORTH

Sheet Scale: AS SHOWN

Sheet Number: C4.03

ISSUE DATE

July 9, 2021

REFER TO PP SHEETS FOR THE DESIGN AND DETAILING OF UTILITIES LOCATED WITHIN ROADWAYS, UTILITY SIZE HAS BEEN SHOWN FOR CLARITY.

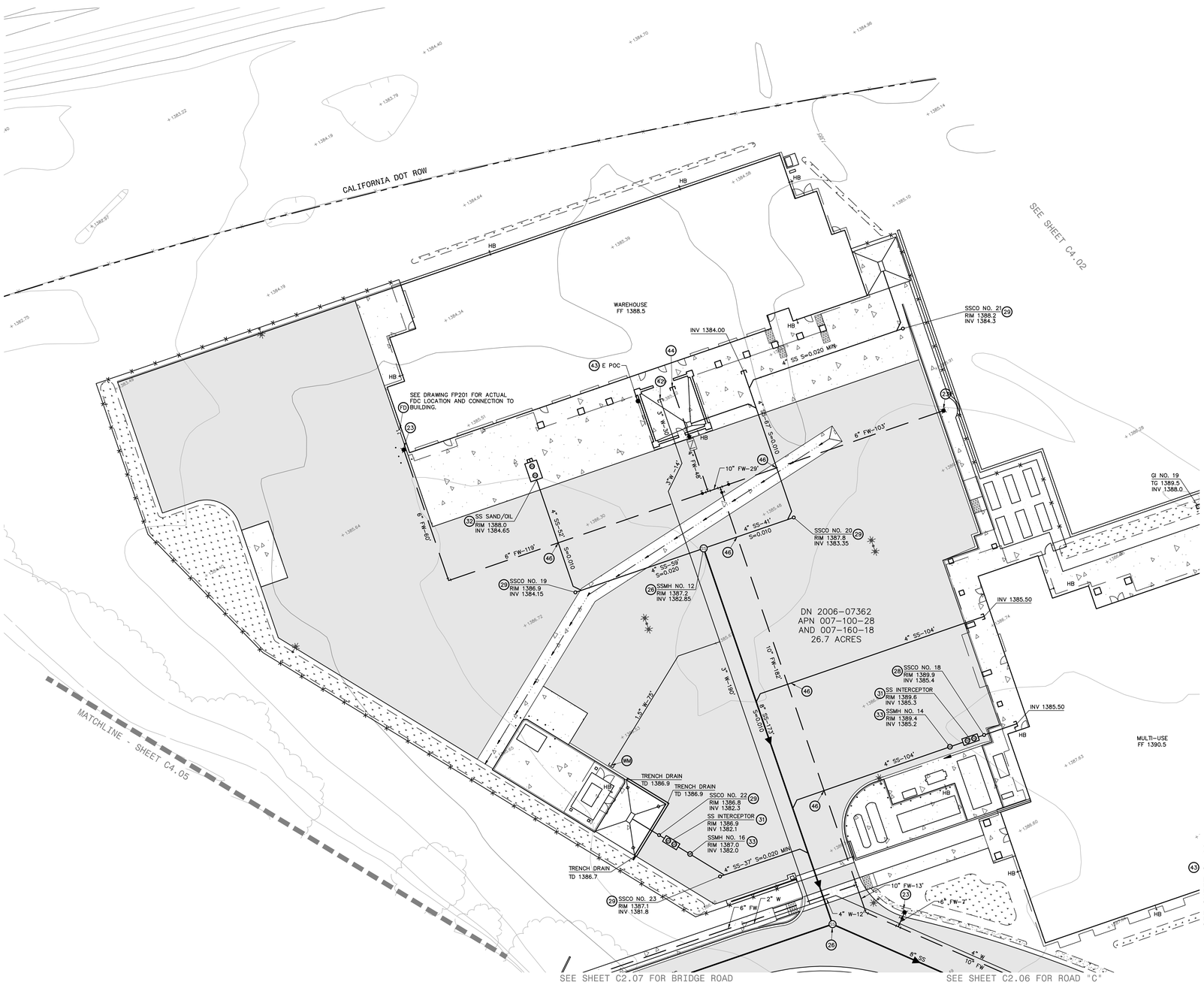

KEYNOTES

(23) FIRE HYDRANT AND LATERAL ASSEMBLY IN ACCORDANCE WITH CITY OF WILLITS STANDARD 502.

(26) SANITARY SEWER MANHOLE IN ACCORDANCE WITH CITY OF WILLITS STANDARD 301 HAVING A TRAFFIC RATED FRAME AND COVER IN ACCORDANCE WITH CITY OF WILLITS STANDARD 303.

(28) PERMANENT MAINLINE CLEANOUT IN ACCORDANCE WITH CITY OF WILLITS STANDARD 307.

(29) SANITARY SEWER LATERAL AND TWO-WAY SANITARY SEWER CLEANOUTS WHERE SHOWN ON PLAN IN ACCORDANCE WITH CHAPTER 7 OF THE 2019 CALIFORNIA PLUMBING CODE AND CITY OF WILLITS STANDARDS 309 AND 310.

(31) 275 GALLON SAND/OIL INTERCEPTOR IN ACCORDANCE WITH CITY OF WILLITS STANDARD 317. REFER TO THE PLUMBING DRAWINGS.

(32) 1,000 GALLON SAND/OIL INTERCEPTOR IN ACCORDANCE WITH CITY OF WILLITS STANDARD 318. REFER TO THE PLUMBING DRAWINGS.

(33) SAMPLING MANHOLE IN ACCORDANCE WITH CITY OF WILLITS STANDARD 319 HAVING A TRAFFIC RATED FRAME AND COVER IN ACCORDANCE WITH CITY OF WILLITS STANDARD 303.

(42) COORDINATE THE LOCATION AND SIZE OF THIS UTILITY WITH THE BUILDING CONTRACTOR AND CONNECT THE SITE UTILITY TO THE BUILDING PLUMBING SYSTEM. PROVIDE CONTROLLED DENSITY FILL (CDF) OR EQUIVALENT IMPERMEABLE TRENCH BACKFILL IMMEDIATELY OUTSIDE OF THE BUILDING TO PREVENT WATER INTRUSION.

(43) THIS UTILITY HAS BEEN SHOWN FOR REFERENCE AND COORDINATION PURPOSES ONLY. REFER TO THE JOINT TRENCH / ELECTRICAL DRAWINGS.

(44) CONFIRM FIRE SERVICE SIZE WITH THE BUILDING SPRINKLER CONTRACTOR PRIOR TO INSTALLATION.

(45) SIMPLEX GRINDER PUMP PACKAGE WITH A 36-INCH FIBERGLASS BASIN, AK INDUSTRIES MODEL GB-36X072-200 OR EQUIVALENT WITH A SIMPLEX PUMP, LIBERTY PUMPS MODEL LSG202M OR EQUIVALENT. CONTROL PANEL TO BE A SJE RHOMBUS MODEL 1121W914H3ABA.

(FD) INSTALL FIRE DEPARTMENT CONNECTION (FDC). SEE DETAIL FD, SHEET C6.02

(WM) COORDINATE THE LOCATION AND SIZE OF THIS UTILITY WITH THE WATER MAZE WASH UNIT. INCLUDE ¾" HOSE BIB.

IDENTIFICATION STAMP
DIV. OF THE STATE ARCHITECT
APP: 02-118630 INC:
REVIEWED FOR
SS ☐ FLS ☐ ACS ☑
DATE: 04/13/2021

OFFICE OF THE STATE FIRE MARSHAL
APPROVED FIRE AND PANIC ONLY
Approval of this plan does not authorize or approve any omission or deviation from applicable regulations. Final approval is subject to field inspection. One set of approved plans shall be available on the project site at all times.
PERMIT NO. 20-N-2332-CP
REVIEWED BY: LEO CATAYLO, OSFM
DATE: 4 / /2021

DGS GENERAL SERVICES
Department of General Services
State of California
Real Estate Services Division
Project Management & Development Branch
707 Third Street, Suite 4-105
West Sacramento, California 95605

NICHOLS MELBURG & ROSSETTO
ARCHITECTS + ENGINEERS
300 Knollcrest Drive
Redding, CA. 96002
(530) 222-3300 (530) 222-3538 FAX
http://www.nmrdesign.com

Copyright © 2021
All ideas, designs, arrangements and plans indicated or represented by this drawing are owned by, and the property of, NICHOLS, MELBURG and ROSSETTO and were created, evolved and developed for use on, and in conjunction with, the specified project. None of such ideas, designs, arrangements or plans shall be used by, or disclosed to any person, firm or corporation for any purpose whatsoever without the written permission of NICHOLS, MELBURG and ROSSETTO.

LICENSE STAMPS

REGISTERED PROFESSIONAL ENGINEER
GREGOORY H. JENNINGS
No. C-68337
CIVIL
STATE OF CALIFORNIA
3/25/2021

CONSULTANT

BKF
200 4th STREET
SUITE 300
SANTA ROSA, CA 95401
(707) 583-8500
www.bkf.com

DRAWING STATUS

CONSTRUCTION DOCUMENTS

ISSUE

No.	Date	Description
1	10/22/2020	INITIAL PLAN REVIEW
2	01/08/2021	AGENCY RESUBMITTAL
3	03/22/2021	AGENCY RESUBMITTAL

If drawing is not 30" x 42" it is a reduced print

PROJECT

RESIDENTIAL CENTER, UKIAH: REPLACEMENT OF EXISTING RESIDENTIAL CENTER

440 EAST HILL ROAD
WILLITS, CALIFORNIA, 95490
MENDOCINO COUNTY
CALIFORNIA CONSERVATION CORPS

Supervisor	Designed	Drawn
RFC	GHJ	BRL

DSA Application No.
02-118630

SHEET TITLE

UTILITY PLAN
WAREHOUSE, STORAGE AND PARKING AREA

DGS Project Number	NMR Project Number
0000000000001826	18-6456

Reference North: NORTH
Sheet Scale: AS SHOWN
Sheet Number: C4.04

ISSUE DATE
July 9, 2021

Login Name: lgt
Plot Date: March 19, 2021 - 6:28 pm
File Name: C:\Temp\AcPublish_12720\181957_SITE.dwg
XREFs: X_TOPO | 18957_SBMH | 18957_SDMH | x-NMC-site | x-NMC-TOPO | x-NMC-ALTA | Ukiah_WetlandDelin_20200923

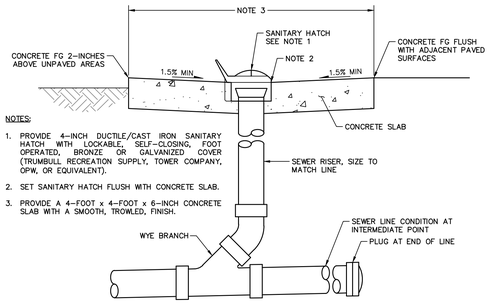

NOTES:

1. PROVIDE 4-INCH DUCTILE/CAST IRON SANITARY HATCH WITH LOCKABLE, SELF-CLOSING, FOOT OPERATED, BRONZE OR GALVANIZED COVER (TRUMBULL RECREATION SUPPLY, TOWER COMPANY, OPW, OR EQUIVALENT).
2. SET SANITARY HATCH FLUSH WITH CONCRETE SLAB.
3. PROVIDE A 4-FOOT x 4-FOOT x 6-INCH CONCRETE SLAB WITH A SMOOTH, TROWELED, FINISH.

1 SANITARY DUMPING STATION
NO SCALE

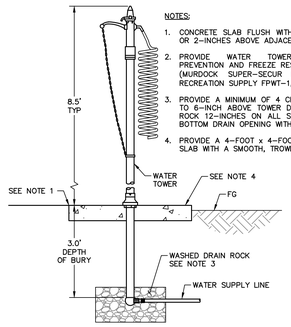

NOTES:

1. CONCRETE SLAB FLUSH WITH ADJACENT PAVEMENT OR 2-INCHES ABOVE ADJACENT UNPAVED AREAS.
2. PROVIDE WATER TOWER WITH BACKFLOW PREVENTION AND FREEZE RESISTANT FUNCTIONALITY (MURDOCK SUPER-SECUR M-275-RV, TRIMBULL RECREATION SUPPLY FPWT-1, OR EQUIVALENT).
3. PROVIDE A MINIMUM OF 4 CF WASHED DRAIN ROCK TO 6-INCH ABOVE TOWER DRAIN OPENING. EXTEND ROCK 12-INCHES ON ALL SIDES OF TOWER. WRAP BOTTOM DRAIN OPENING WITH FILTER FABRIC.
4. PROVIDE A 4-FOOT x 4-FOOT x 6-INCH CONCRETE SLAB WITH A SMOOTH, TROWLED, FINISH.

2 WATER TOWER
NO SCALE

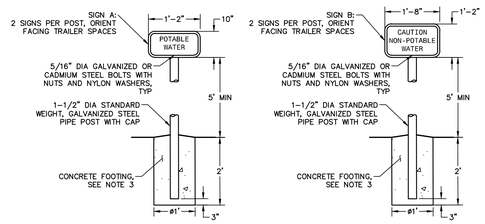

NOTES:

1. SIGN A, 14" X 10":
   a) COLORS:
      A. BORDER: BLACK, RETROREFLECTIVE
      B. LEGEND: 3" LETTERS, BLACK, RETROFLECTIVE
      C. BACKGROUND: WHITE, RETROFLECTIVE
2. SIGN A, 14" X 10":
   a) COLORS:
      A. BORDER: BLACK, RETROREFLECTIVE
      B. LEGEND: 3" LETTERS, BLACK, RETROFLECTIVE
      C. BACKGROUND: WHITE, RETROFLECTIVE
3. CENTER POST IN FOOTING. SLOPE TOP OF FOOTING TO FACILITATE DRAINAGE.

3 TRAILER STATION SIGNAGE
NO SCALE

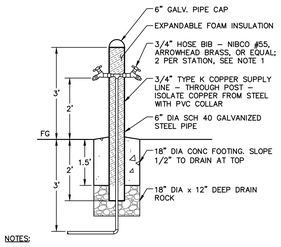

NOTES:

1. PROVIDE ANTI-SIPHON VACUUM BREAKER (WATTS SERIES 8A OR EQUAL, OR PROVIDE HOSE BIB WITH INTEGRAL VACUUM BREAKER).
2. PAINT STEEL PIPE YELLOW.
3. FACE HOSE BIBS TOWARD TRAILER PARKING AREAS ON OPPOSITE SIDES.

4 FILL STATION
NO SCALE

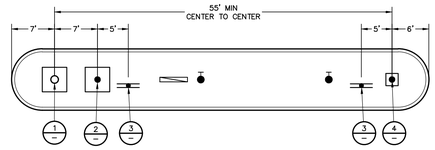

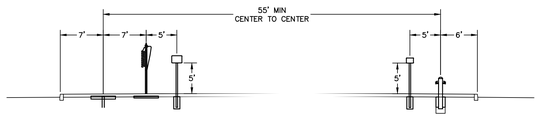

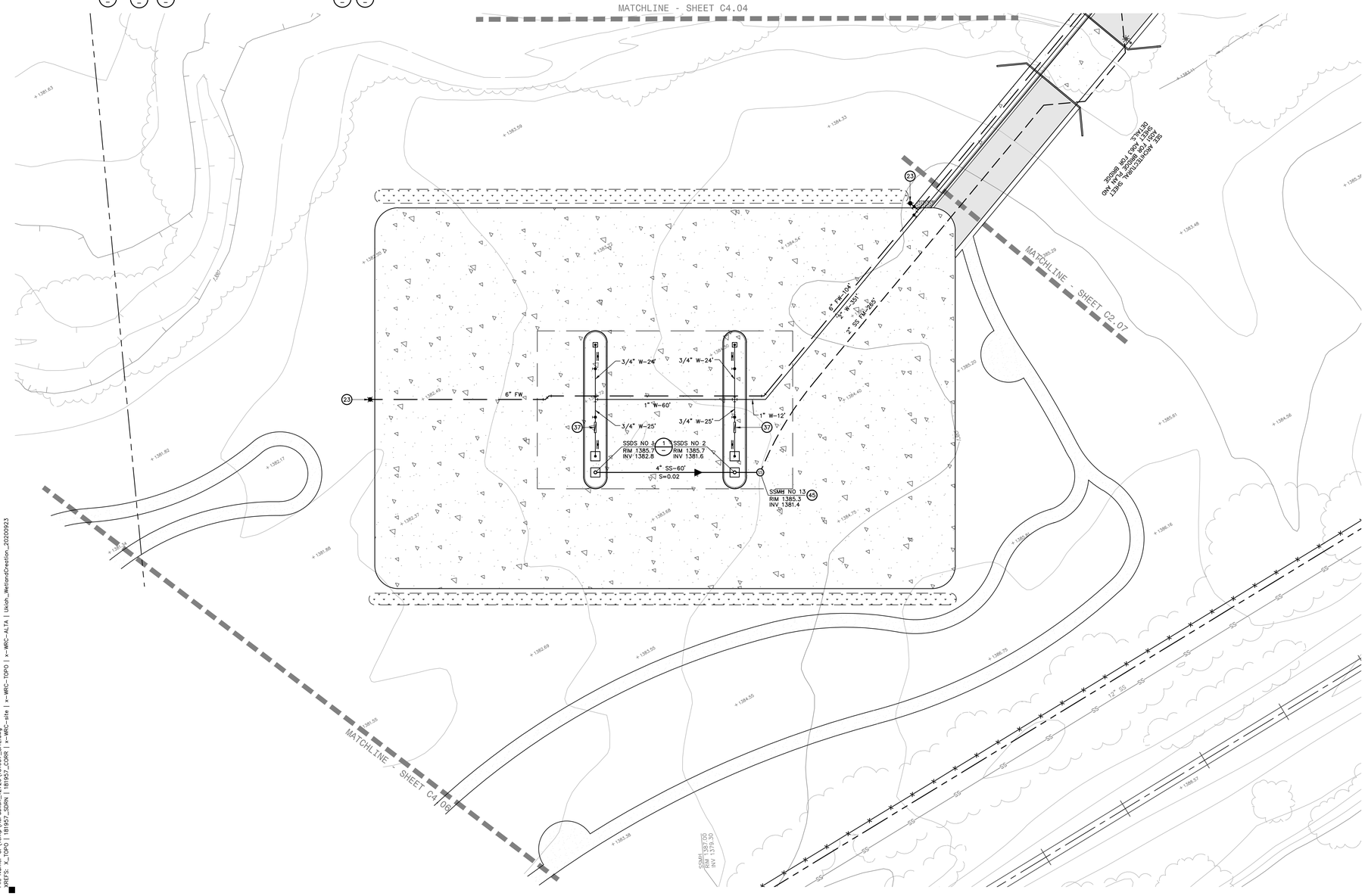

20 0 20 40
scale 1" = 20' feet

Login Name: tjit
Plot Date: March 19, 2021 - 6:32 pm
File Name: C:\Temp\AsPublish_12720\181957_SITE.dwg
XREFs: N_TOPO | 181957_SDMH | 181957_SDMH | x-NMC-site | x-NMC-TOPO | x-NMC-ALTA | Ukiah_WetlandCreation_20200923

IDENTIFICATION STAMP
DIV. OF THE STATE ARCHITECT
APP: 02-118630 INC:
REVIEWED FOR
SS ☐ FLS ☐ ACS ☑
DATE: 04/13/2021

OFFICE OF THE STATE FIRE MARSHAL
APPROVED FIRE AND PANIC ONLY
Approval of this plan does not authorize or approve any omission or deviation from applicable regulations. Final approval is subject to field inspection. One set of approved plans shall be available on the project site at all times.
PERMIT NO. 20-N-2332-CP
REVIEWED BY: LEO CATAYLO, OSFM
DATE: 4 / /2021

DGS GENERAL SERVICES
Department of General Services
State of California
Real Estate Services Division
Project Management & Development Branch
707 Third Street, Suite 4-105
West Sacramento, California 95605

NICHOLS MELBURG & ROSSETTO ARCHITECTS + ENGINEERS
300 Knollcrest Drive
Redding, CA. 96002
(530) 222-3300 (530) 222-3538 FAX
http://www.nmrdesign.com

Copyright © 2021
All ideas, designs, arrangements and plans indicated or represented by this drawing are owned by, and the property of, NICHOLS, MELBURG and ROSSETTO and were created, evolved and developed for use on, and in conjunction with, the specified project. None of such ideas, designs, arrangements or plans shall be used by, or disclosed to any person, firm or corporation for any purpose whatsoever without the written permission of NICHOLS, MELBURG and ROSSETTO.

LICENSE STAMPS

REGISTERED PROFESSIONAL ENGINEER
GREGGORY H. JENNINGS
No. C - 68337
CIVIL
STATE OF CALIFORNIA
3/25/2021

CONSULTANT

BKF
200 4th STREET
SUITE 300
SANTA ROSA, CA 95401
(707) 583-8500
www.bkf.com

DRAWING STATUS

CONSTRUCTION DOCUMENTS

ISSUE

No.	Date	Description
1	10/22/2020	INITIAL PLAN REVIEW
2	01/08/2021	AGENCY RESUBMITTAL
3	03/22/2021	AGENCY RESUBMITTAL

If drawing is not 30" x 42" it is a reduced print

PROJECT

RESIDENTIAL CENTER, UKIAH: REPLACEMENT OF EXISTING RESIDENTIAL CENTER

440 EAST HILL ROAD
WILLITS, CALIFORNIA, 95490
MENDOCINO COUNTY
CALIFORNIA CONSERVATION CORPS

Supervisor	Designed	Drawn
RFC	GHJ	BRL

DSA Application No.
02-118630

SHEET TITLE

UTILITY PLAN
CREW STAGING AREA

DGS Project Number: 0000000000001826
NMR Project Number: 18-6456

Reference North: NORTH
Sheet Scale: AS SHOWN
Sheet Number: C4.05

ISSUE DATE
July 9, 2021

20 0 20 40
scale 1" = 20' feet

IDENTIFICATION STAMP
DIV. OF THE STATE ARCHITECT
APP: 02-118630 INC:
REVIEWED FOR
SS ☐ FLS ☐ ACS ☑
DATE: 04/13/2021

OFFICE OF THE STATE FIRE MARSHAL
APPROVED FIRE AND PANIC ONLY
Approval of this plan does not authorize or approve any omission or deviation from applicable regulations. Final approval is subject to field inspection. One set of approved plans shall be available on the project site at all times.
PERMIT NO. 2014-2332-CP
REVIEWED BY: LEO CATAYLO, OSFM
DATE: 4 / /2021

DGS GENERAL SERVICES
Department of General Services
State of California
Real Estate Services Division
Project Management & Development Branch
707 Third Street, Suite 4-105
West Sacramento, California 95605

NICHOLS MELBURG & ROSSETTO
ARCHITECTS + ENGINEERS
300 Knollcrest Drive
Redding, CA. 96002
(530) 222-3300 (530) 222-3538 FAX
http://www.nmrdesign.com

Copyright © 2021
All ideas, designs, arrangements and plans indicated or represented by this drawing are owned by, and the property of, NICHOLS, MELBURG and ROSSETTO and were created, evolved and developed for use on, and in conjunction with, the specified project. None of such ideas, designs, arrangements or plans shall be used by, or disclosed to any person, firm or corporation for any purpose whatsoever without the written permission of NICHOLS, MELBURG and ROSSETTO.

LICENSE STAMPS

REGISTERED PROFESSIONAL ENGINEER
GREGGORY H. JENNINGS
No. C-68337
CIVIL
STATE OF CALIFORNIA
3/25/2021

CONSULTANT

BKF
200 4th STREET
SUITE 300
SANTA ROSA, CA 95401
(707) 583-8500
www.bkf.com

DRAWING STATUS

CONSTRUCTION DOCUMENTS

ISSUE

No.	Date	Description
1	10/22/2020	INITIAL PLAN REVIEW
2	01/08/2021	AGENCY RESUBMITTAL
3	03/22/2021	AGENCY RESUBMITTAL

If drawing is not 30" x 42" it is a reduced print

PROJECT

RESIDENTIAL CENTER, UKIAH: REPLACEMENT OF EXISTING RESIDENTIAL CENTER

440 EAST HILL ROAD
WILLITS, CALIFORNIA, 95490
MENDOCINO COUNTY
CALIFORNIA CONSERVATION CORPS

Supervisor	Designed	Drawn
RFC	GHJ	BRL

DSA Application No.
02-118630

SHEET TITLE

UTILITY PLAN
SOLAR AREA AND
EXERCISE TRAIL

DGS Project Number: 0000000000001826
NMR Project Number: 18-6456

Reference North: NORTH
Sheet Scale: AS SHOWN
Sheet Number: C4.06

ISSUE DATE
July 9, 2021

Login Name: tjt
Plot Date: March 19, 2021 - 6:33 pm
File Name: C:\Temp\AcPublish_12720\181957_SITE.dwg
XREFs: x_TOPO | 181957_SDWK | x-MRG-site | x-MRG-TOPO | x-MRG-ALTA | Ukiah_WetlandDelin_20200923

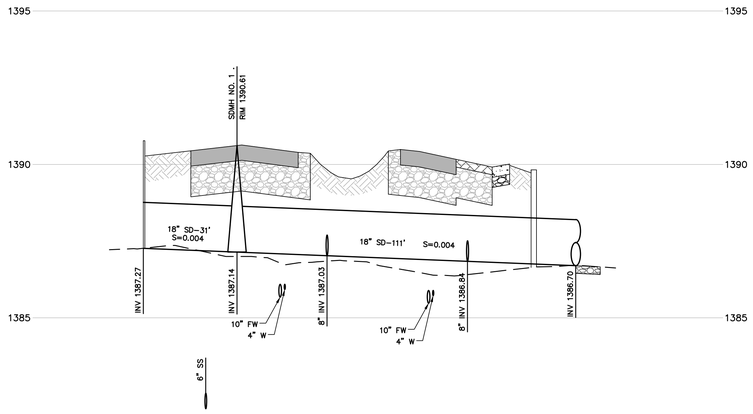

S1 STORM DRAIN 01

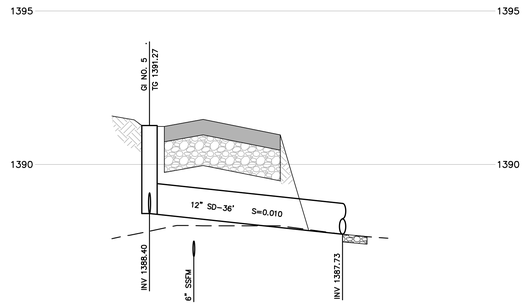

S2 STORM DRAIN 02

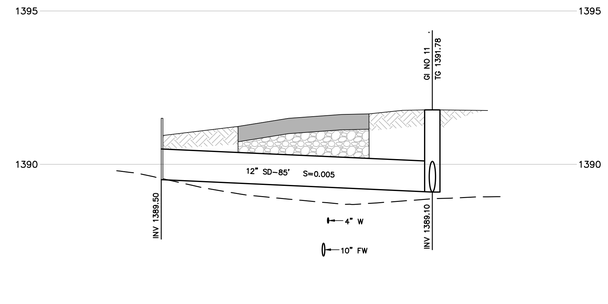

S3 STORM DRAIN 03

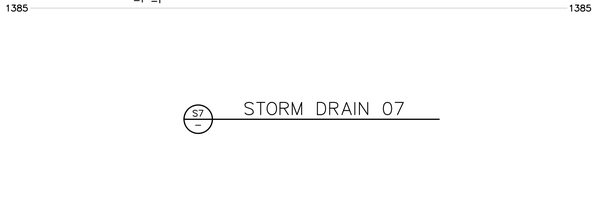

S4 STORM DRAIN 04

S5 STORM DRAIN 05

S6 STORM DRAIN 06

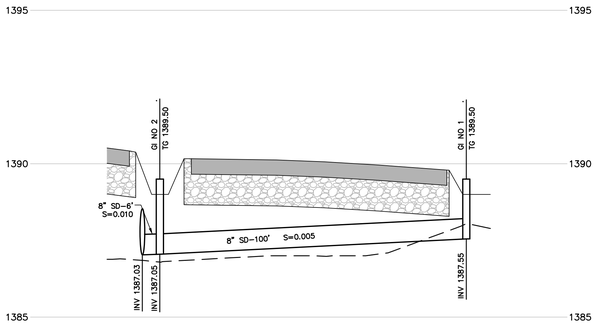

S7 STORM DRAIN 07

SCALE:
HORZ. 1" = 20'
VERT. 1" = 2'

IDENTIFICATION STAMP
DIV. OF THE STATE ARCHITECT
APP: 02-118630 INC:
REVIEWED FOR
SS ☐ FLS ☐ ACS ☑
DATE: 04/13/2021

OFFICE OF THE STATE FIRE MARSHAL
APPROVED FIRE AND PANIC ONLY
Approval of this plan does not authorize or approve any omission or deviation from applicable regulations. Final approval is subject to field inspection. One set of approved plans shall be available on the project site at all times.
PERMIT NO. 20-N-2332-CP
REVIEWED BY: LEO CATAYLO, OSFM
DATE: 4 / /2021

GENERAL SERVICES
Department of General Services
State of California
Real Estate Services Division
Project Management & Development Branch
707 Third Street, Suite 4-105
West Sacramento, California 95605

NICHOLS MELBURG & ROSSETTO
ARCHITECTS + ENGINEERS
300 Knollcrest Drive
Redding, CA. 96002
(530) 222-3300 (530) 222-3538 FAX
http://www.nmrdesign.com

Copyright © 2021
All ideas, designs, arrangements and plans indicated or represented by this drawing are owned by, and the property of, NICHOLS, MELBURG and ROSSETTO and were created, evolved and developed for use on, and in conjunction with, the specified project. None of such ideas, designs, arrangements or plans shall be used by, or disclosed to any person, firm or corporation for any purpose whatsoever without the written permission of NICHOLS, MELBURG and ROSSETTO.

LICENSE STAMPS

REGISTERED PROFESSIONAL ENGINEER
GREGORY H. JENNINGS
No. C-68337
CIVIL
STATE OF CALIFORNIA
3/25/2021

CONSULTANT

BKF
200 4th STREET
SUITE 300
SANTA ROSA, CA 95401
(707) 583-8500
www.bkf.com

DRAWING STATUS
CONSTRUCTION DOCUMENTS

ISSUE

No.	Date	Description
1	10/22/2020	INITIAL PLAN REVIEW
2	01/08/2021	AGENCY RESUBMITTAL
3	03/22/2021	AGENCY RESUBMITTAL

If drawing is not 30" x 42" it is a reduced print

PROJECT
RESIDENTIAL CENTER, UKIAH: REPLACEMENT OF EXISTING RESIDENTIAL CENTER
440 EAST HILL ROAD
WILLITS, CALIFORNIA, 95490
MENDOCINO COUNTY
CALIFORNIA CONSERVATION CORPS

Supervisor	Designed	Drawn
RFC	GHJ	BRL

DSA Application No.
02-118630

SHEET TITLE
UTILITY PLAN
STORMDRAIN PROFILES

DGS Project Number: 0000000000001826
NMR Project Number: 18-6456
Reference North
Sheet Scale: AS SHOWN
Sheet Number: C4.07

ISSUE DATE
July 9, 2021

Login Name: tlpl
Plot Date: March 19, 2021 - 6:35 pm
File Name: C:\Temp\AcPublish_12720\18197_SITE.dwg
XREFS: A_TOPO | 18197_SDMH | 18197_SDRN | x-NRC-site | x-NRC-TOPO | x-NRC-ALTA | Ukiah_WetlandDelineation_20200923

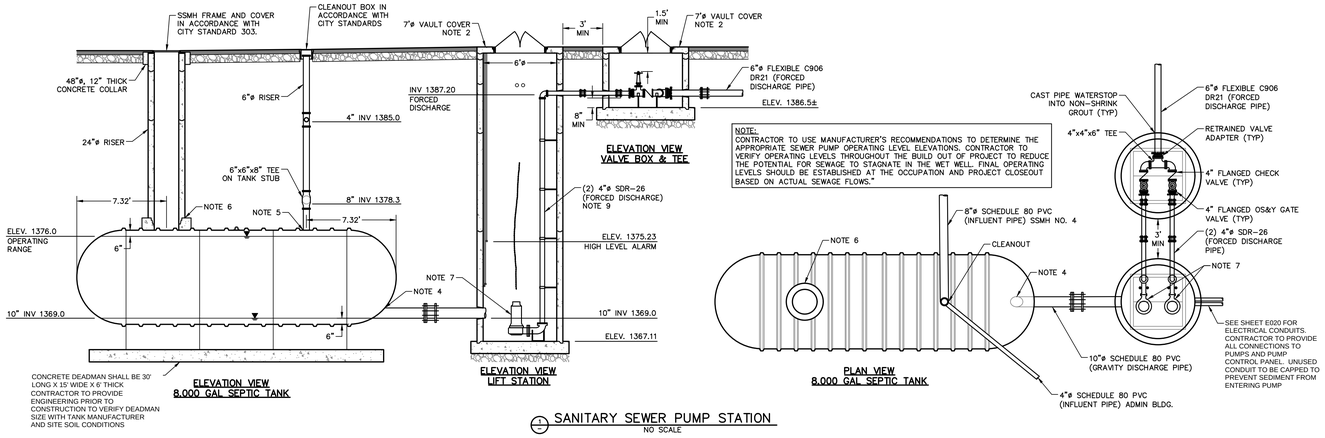

SANITARY SEWER PUMP STATION
NO SCALE

SYSTEM DESIGN AND OPERATION REQUIREMENTS:

REQUIRED VAULT & TANK CAPACITY – 9,000 GAL* **

PUMP LEVEL SETTINGS (ALL DISTANCE MEASURED FROM PUMP VAULT FLOOR)

PUMPS SHALL ALTERNATE DAYS OF OPERATION.

LOW LEVEL ALARM: 24"

LOW LEVEL ALARM RESET: 28"

PUMP OFF: 31"

BACKUP PUMP OFF: 79"

HIGH LEVEL ALARM RESET: 110"

PUMP ON: 115"

BACKUP PUMP START: 120"

HIGH LEVEL ALARM: 120"

VALUE ENGINEERING ALTERNATIVE PUMP/TANK CONFIGURATIONS WILL BE CONSIDERED. CONTRACTORS ALTERNATIVE MUST BE DESIGNED BY REGISTERED CIVIL ENGINEER (STATE OF CALIFORNIA) AND SUBMITTED TO OWNER FOR CONSIDERATION/APPROVAL. SEWER LOADING CALCULATIONS AND ASSUMPTIONS CAN BE PROVIDED TO CONTRACTOR IF REQUESTED.

* BOTTOM AND TOP 0.5' OF TANK AND BOTTOM 31" OF PUMP VAULT NOT INCLUDED IN REQUIRED CAPACITY.

** THE REQUIRED CAPACITY IS 9,000 GALLONS. WHAT IS SHOWN HERE IS A 7,500 GALLON CAPACITY TANK WITH A VAULT HAVING A VOLUME OF 1,500 GALLONS.

GENERAL NOTES:

1. TEE, VALVES, GATE VALVES SHALL BE SUPPORTED BY METAL STAND
2. VAULT SHALL HAVE 4' X 4' METAL DIAMOND PLATED COVER WITH H2O LOADING. COVER SHALL BE CASTED INTO 7' DIA VAULT COVER. NO JOINTS ALLOWED.
3. COVER SHALL HAVE TORSION ROD LIFT ASSIST AND HEX LOCK DOWN STYLE LATCH SYSTEM. DOORS SHALL OPEN TO FULL VERTICAL POSITION.
4. TANK SHALL BE MANUFACTURED WITH 2' LONG (MIN) 10" ID STUB CENTERED ALONG THE LONG AXIS OF THE TANK. INVERT SHALL BE 0.5' FROM INSIDE BOTTOM OF TANK.
5. TANK SHALL BE MANUFACTURED WITH 12" LONG (MIN) 6" ID STUB CENTERED ALONG THE LONG AXIS OF THE TANK AND 6.5' FROM END OF TANK.
6. TANK SHALL BE MANUFACTURED WITH A 2' LONG 2' DIAMETER MANWAY ACCESS CENTERED ALONG THE LONG AXIS OF THE TANK LOCATED 8' FROM END OF TANK. ATTACH PVC RISER WITH MANUFACTURES RECOMMENDED COUPLING.
7. PROVIDE TWO (2) LIBERTY PUMPS 3XLM10-SERIES 10HP PUMPS WITH GR4 SERIES GUIDE RAILS. COORDINATE WITH PRECASTER AND FOLLOW MANUFACTURERS INSTALLATION INSTRUCTIONS, OR APPROVED EQUAL.
8. ALL PIPING AND FITTINGS SHOWN IN DETAIL SHALL BE SDR26 PVC.
9. VERTICAL 4" DISCHARGE PIPING SHALL BE FIXED TO THE WALL OF THE VAULT WITH MOUNTING BRACKETS WITHIN 2' OF PUMP DISCHARGE (BOTTOM), VAULT PENETRATION (TOP), WITHIN 2' OF ANY JOINTS, AND NO MORE THAN 5' BETWEEN BRACKETS. PIPE MOUNTING BRACKETS SHALL BE PRECAST INTO VAULT WALL. BRACKETS AND HARDWARE SHALL BE POWDER COATED HEAVY DUTY CLASS 30 CAST IRON OR SS 316, MATCHING PUMP CASING AND FIXTURE SPECIFICATION.
10. PRECAST CONCRETE VAULTS AND JOINTS SHALL BE INSTALLED, PAINTED, SEALED, AND TESTED IN ACCORDANCE WITH CITY OF WILLITS STANDARD SPECIFICATIONS AND STANDARD DETAIL 302 FOR SEWER MANHOLES.

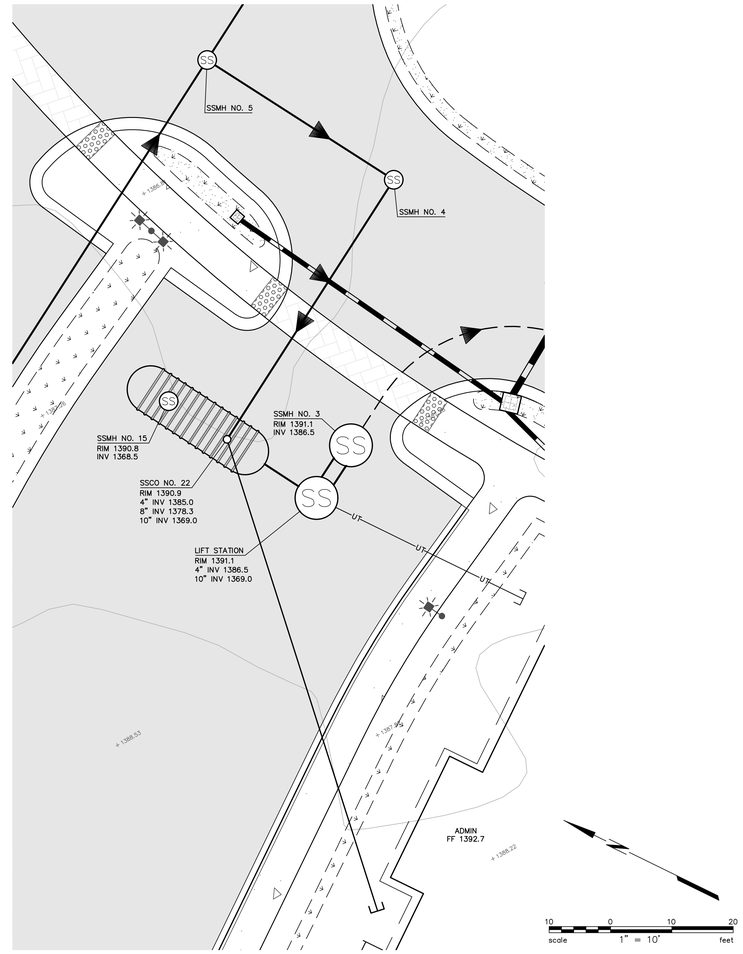

Login Name: tgt
Plot Date: March 19, 2021 - 6:36 pm
File Name: C:\Temp\AcPublish_12720\18957_SITE.dwg
XREFS: X_CPO | 18957_SSMH | 18957_SSMH | x-MRC-site | x-MRC-TOPO | x-MRC-ALTA | Ukiah_WetlandCreation_20200923

IDENTIFICATION STAMP
DIV. OF THE STATE ARCHITECT
APP: 02-118630 INC:
REVIEWED FOR
SS ☐ FLS ☐ ACS ☑
DATE: 04/13/2021

OFFICE OF THE STATE FIRE MARSHAL
APPROVED FIRE AND PANIC ONLY
Approval of this plan does not authorize or approve any omission or deviation from applicable regulations. Final approval is subject to field inspection. One set of approved plans shall be available on the project site at all times.
PERMIT NO. 20-N-2332-CP
REVIEWED BY: LEO CATAYLO, OSFM
DATE: 4 / /2021

DGS GENERAL SERVICES
Department of General Services
State of California
Real Estate Services Division
Project Management & Development Branch
707 Third Street, Suite 4-105
West Sacramento, California 95605

NICHOLS MELBURG & ROSSETTO
ARCHITECTS + ENGINEERS
300 Knollcrest Drive
Redding, CA. 96002
(530) 222-3300 (530) 222-3538 FAX
http://www.nmrdesign.com

Copyright © 2021
All ideas, designs, arrangements and plans indicated or represented by this drawing are owned by, and the property of, NICHOLS, MELBURG and ROSSETTO and were created, evolved and developed for use on, and in conjunction with, the specified project. None of such ideas, designs, arrangements or plans shall be used by, or disclosed to any person, firm or corporation for any purpose whatsoever without the written permission of NICHOLS, MELBURG and ROSSETTO.

LICENSE STAMPS

REGISTERED PROFESSIONAL ENGINEER
GREGGORY H. JENNINGS
No. C-68337
CIVIL
STATE OF CALIFORNIA
3/25/2021

CONSULTANT

BKF
200 4th STREET
SUITE 300
SANTA ROSA, CA 95401
(707) 583-8500
www.bkf.com

DRAWING STATUS

CONSTRUCTION DOCUMENTS

ISSUE

No.	Date	Description
1	10/22/2020	INITIAL PLAN REVIEW
2	01/08/2021	AGENCY RESUBMITTAL
3	03/22/2021	AGENCY RESUBMITTAL

If drawing is not 30" x 42" it is a reduced print

PROJECT

RESIDENTIAL CENTER, UKIAH: REPLACEMENT OF EXISTING RESIDENTIAL CENTER

440 EAST HILL ROAD
WILLITS, CALIFORNIA, 95490
MENDOCINO COUNTY
CALIFORNIA CONSERVATION CORPS

Supervisor	Designed	Drawn
RFC	GHJ	BRL

DSA Application No.
02-118630

SHEET TITLE

UTILITY PLAN
SEWER LIFT STATION

DGS Project Number: 0000000000001826
NMR Project Number: 18-6456

Reference North
Sheet Scale: AS SHOWN
Sheet Number: C4.08

ISSUE DATE

July 9, 2021

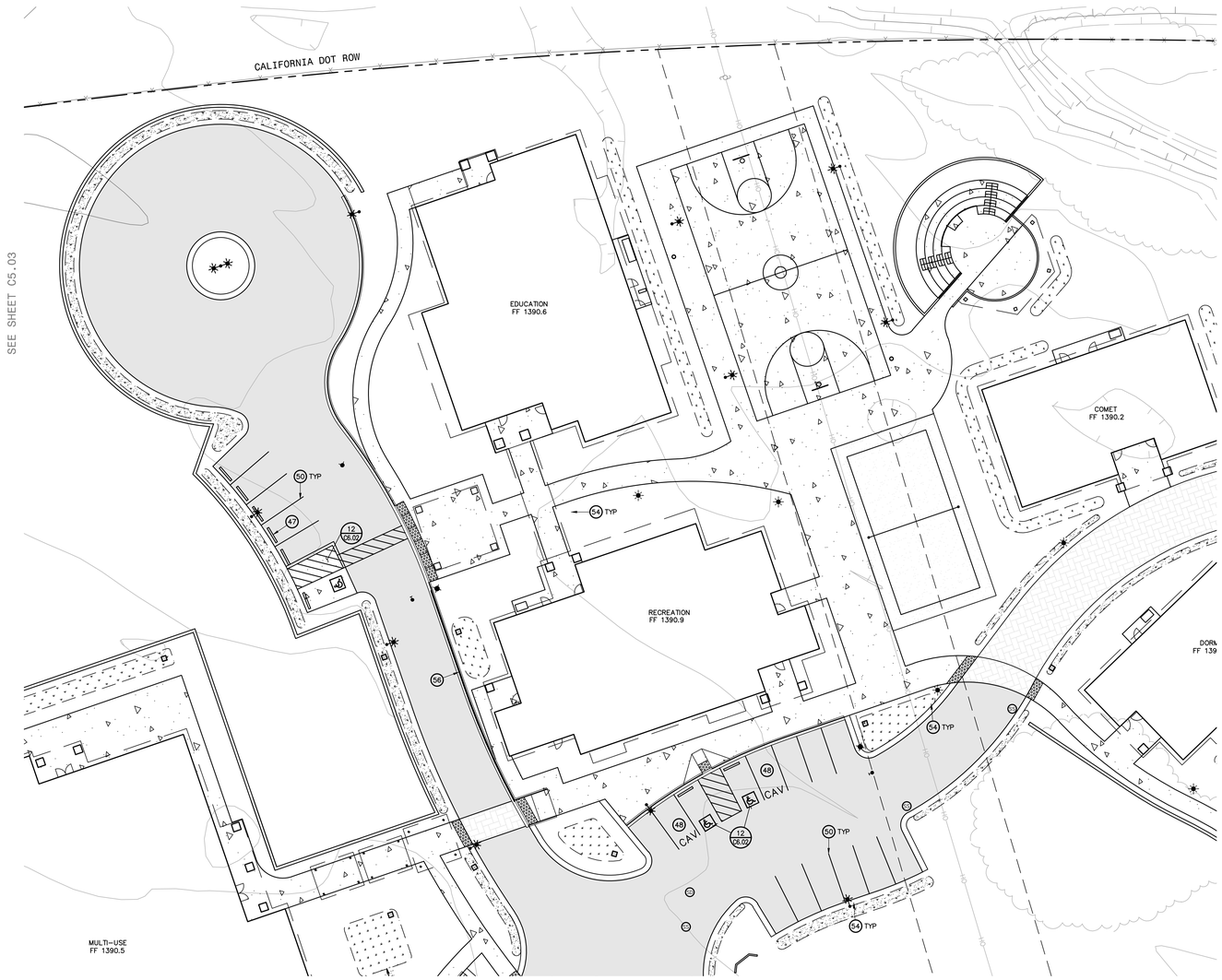

20 0 20 40
scale 1" = 20' feet

KEYNOTES

47 CONCRETE WHEEL STOP, SET IN EPOXY.

48 'CLEAN AIR VEHICLE' PARKING STALL MARKINGS IN ACCORDANCE WITH SECTION 5.106.5.2.1 OF THE 2019 CALIFORNIA GREEN BUILDING CODE.

49 THERMOPLASTIC DIAGONAL 5-FOOT WIDE SOLID WHITE STRIPING WHERE SHOWN ON PLAN HAVING 4-INCH WIDE STRIPES AT 36-INCHES ON CENTER.

50 THERMOPLASTIC 4-INCH WIDE SOLID WHITE STRIPING WHERE SHOWN ON PLAN.

51 10-FOOT LONG DIRECTIONAL ARROW WITH SOLID WHITE THERMOPLASTIC PAINT.

52 R1-1 STOP SIGN AND LIMIT SIGN IN ACCORDANCE WITH FIGURE 2B-1 AND SECTIONS 2B.05.02 AND 3B.16.06 OF THE 2014 CALIFORNIA MANUAL ON UNIFORM TRAFFIC CONTROL DEVICES.

53 THERMOPLASTIC 'STOP' LEGEND IN ACCORDANCE WITH CALTRANS 2018 STANDARD PLAN A24D.

54 SITE LIGHTING. REFER TO THE ELECTRICAL DRAWINGS.

55 18-INCH TALL, 24-INCH WIDE FIRE LANE SIGN.

56 PAINT CURB RED AND ANNOTATE WITH 3-INCH TALL WHITE LETTERS HAVING A 3/4-INCH STROKE WHICH READ "NO PARKING FIRE LANE".

IDENTIFICATION STAMP
DIV. OF THE STATE ARCHITECT
APP: 02-118630 INC:
REVIEWED FOR
SS ☐ FLS ☐ ACS ☑
DATE: 04/13/2021

OFFICE OF THE STATE FIRE MARSHAL
APPROVED FIRE AND PANIC ONLY
Approval of this plan does not authorize or approve any omission or deviation from applicable regulations. Final approval is subject to field inspection. One set of approved plans shall be available on the project site at all times.
PERMIT NO. 28-N-2332-CP
REVIEWED BY: LEO CATAYLO, OSFM
DATE: 4 / /2021

GENERAL SERVICES
Department of General Services
State of California
Real Estate Services Division
Project Management & Development Branch
707 Third Street, Suite 4-105
West Sacramento, California 95605

NICHOLS MELBURG & ROSSETTO
ARCHITECTS + ENGINEERS
300 Knollcrest Drive
Redding, CA. 96002
(530) 222-3300 (530) 222-3538 FAX
http://www.nmrdesign.com

Copyright © 2021
All ideas, designs, arrangements and plans indicated or represented by this drawing are owned by, and the property of, NICHOLS, MELBURG and ROSSETTO and were created, evolved and developed for use on, and in conjunction with, the specified project. None of such ideas, designs, arrangements or plans shall be used by, or disclosed to any person, firm or corporation for any purpose whatsoever without the written permission of NICHOLS, MELBURG and ROSSETTO.

LICENSE STAMPS

REGISTERED PROFESSIONAL ENGINEER
GREGGORY H. JENNINGS
No. C-68337
CIVIL
STATE OF CALIFORNIA
3/25/2021

CONSULTANT

BKF
200 4th STREET
SUITE 300
SANTA ROSA, CA 95401
(707) 583-8500
www.bkf.com

DRAWING STATUS

CONSTRUCTION DOCUMENTS

ISSUE

No.	Date	Description
1	10/22/2020	INITIAL PLAN REVIEW
2	01/08/2021	AGENCY RESUBMITTAL
3	03/22/2021	AGENCY RESUBMITTAL

If drawing is not 30" x 42" it is a reduced print

PROJECT

RESIDENTIAL CENTER, UKIAH: REPLACEMENT OF EXISTING RESIDENTIAL CENTER

440 EAST HILL ROAD
WILLITS, CALIFORNIA, 95490
MENDOCINO COUNTY
CALIFORNIA CONSERVATION CORPS

Supervisor	Designed	Drawn
RFC	GHJ	BRL

DSA Application No.
02-118630

SHEET TITLE

STRIPING PLAN
RECREATION AREA

DGS Project Number: 000000000001826
NMR Project Number: 18-6456

Reference North: NORTH
Sheet Scale: AS SHOWN
Sheet Number: C5.01

ISSUE DATE

July 9, 2021

Login Name: tjot
Plot Date: March 19, 2021 - 6:21 pm
File Name: K:\2018\181957_CCC_Willits_Residential_Center\dwg\181957_SITE.dwg
XREFs: ?L_GRID | 181957_SIGN | x-WRC-site | x-WRC-TOPO | x-WRC-ALTA | Ukiah_WetlandDelin_20200923

KEYNOTES

(47) CONCRETE WHEEL STOP, SET IN EPOXY.

(48) 'CLEAN AIR VEHICLE' PARKING STALL MARKINGS IN ACCORDANCE WITH SECTION 5.106.5.2.1 OF THE 2019 CALIFORNIA GREEN BUILDING CODE.

(49) THERMOPLASTIC DIAGONAL 5-FOOT WIDE SOLID WHITE STRIPING WHERE SHOWN ON PLAN HAVING 4-INCH WIDE STRIPES AT 36-INCHES ON CENTER.

(50) THERMOPLASTIC 4-INCH WIDE SOLID WHITE STRIPING WHERE SHOWN ON PLAN.

(51) 10-FOOT LONG DIRECTIONAL ARROW WITH SOLID WHITE THERMOPLASTIC PAINT.

(52) R1-1 STOP SIGN AND LIMIT SIGN IN ACCORDANCE WITH FIGURE 2B-1 AND SECTIONS 2B.05.02 AND 3B.16.06 OF THE 2014 CALIFORNIA MANUAL ON UNIFORM TRAFFIC CONTROL DEVICES.

(53) THERMOPLASTIC 'STOP' LEGEND IN ACCORDANCE WITH CALTRANS 2018 STANDARD PLAN A24D.

(54) SITE LIGHTING. REFER TO THE ELECTRICAL DRAWINGS.

(55) 18-INCH TALL, 24-INCH WIDE FIRE LANE SIGN.

(56) PAINT CURB RED AND ANNOTATE WITH 3-INCH TALL WHITE LETTERS HAVING A 3/4-INCH STROKE WHICH READ "NO PARKING FIRE LANE".

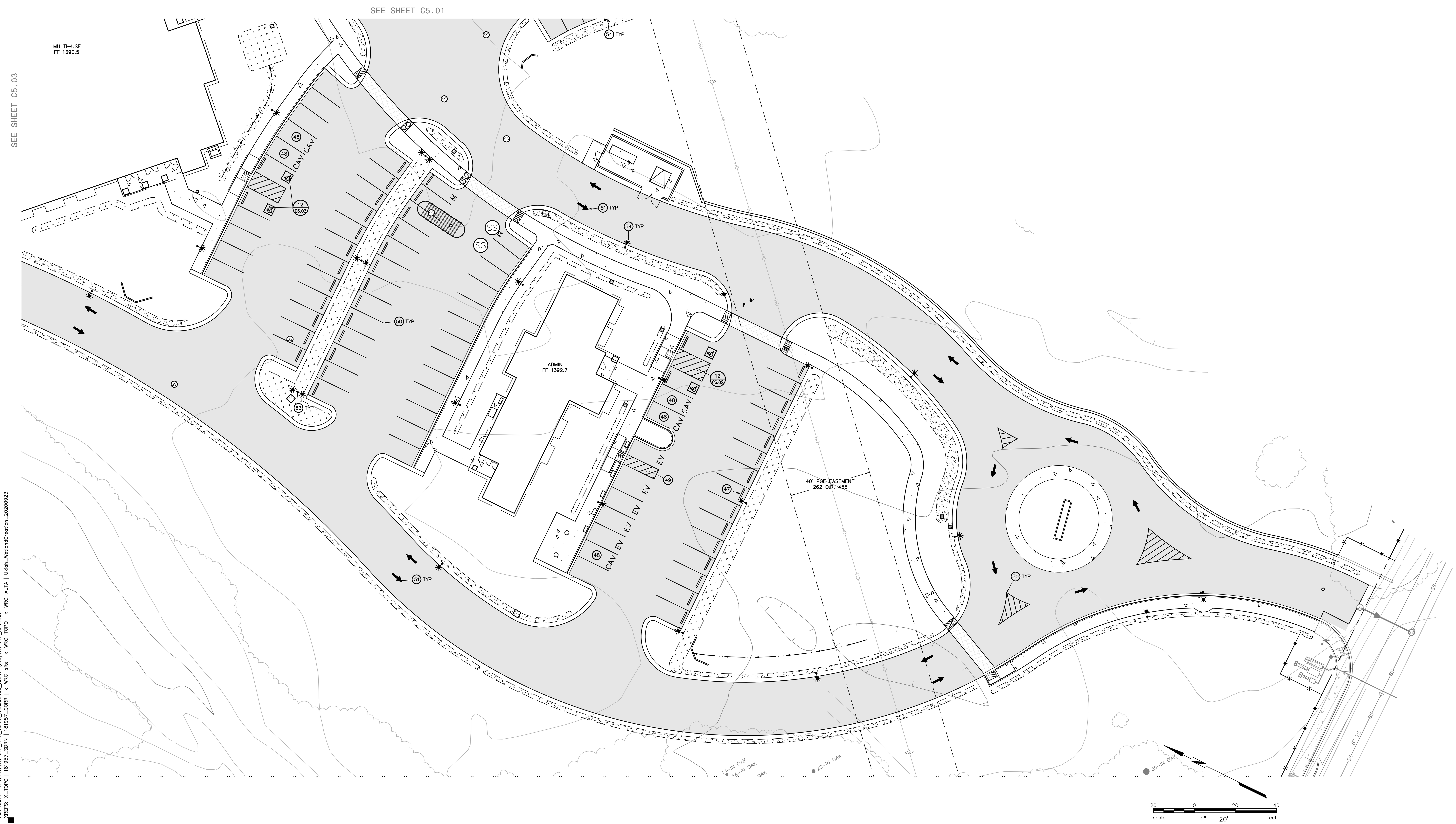

IDENTIFICATION STAMP
DIV. OF THE STATE ARCHITECT
APP: 02-118630 INC:
REVIEWED FOR
SS ☐ FLS ☐ ACS ☑
DATE: 04/13/2021

OFFICE OF THE STATE FIRE MARSHAL
APPROVED FIRE AND PANIC ONLY
Approval of this plan does not authorize or approve any omission or deviation from applicable regulations. Final approval is subject to field inspection. One set of approved plans shall be available on the project site at all times.
PERMIT NO.: 20-N-2332-CP
REVIEWED BY: LITO CATAYLO, OSFM
DATE: 4/1/2021

GENERAL SERVICES
Department of General Services
State of California
Real Estate Services Division
Project Management & Development Branch
707 Third Street, Suite 4-105
West Sacramento, California 95605

NICHOLS MELBURG & ROSSETTO
ARCHITECTS + ENGINEERS
300 Knollcrest Drive
Redding, CA. 96002
(530) 222-3300 (530) 222-3538 FAX
http://www.nmrdesign.com

Copyright © 2021
All ideas, designs, arrangements and plans indicated or represented by this drawing are owned by, and the property of, NICHOLS, MELBURG and ROSSETTO and were created, evolved and developed for use on, and in conjunction with, the specified project. None of such ideas, designs, arrangements or plans shall be used by, or disclosed to any person, firm or corporation for any purpose whatsoever without the written permission of NICHOLS, MELBURG and ROSSETTO.

LICENSE STAMPS

REGISTERED PROFESSIONAL ENGINEER
GREGGORY H. JENNINGS
No. C-68337
CIVIL
STATE OF CALIFORNIA
3/25/2021

CONSULTANT

BKF
200 4th STREET
SUITE 300
SANTA ROSA, CA 95401
(707) 583-8500
www.bkf.com

DRAWING STATUS

CONSTRUCTION DOCUMENTS

ISSUE

No.	Date	Description
1	10/22/2020	INITIAL PLAN REVIEW
2	01/08/2021	AGENCY RESUBMITTAL
3	03/22/2021	AGENCY RESUBMITTAL

If drawing is not 30" x 42" it is a reduced print

PROJECT

RESIDENTIAL CENTER, UKIAH: REPLACEMENT OF EXISTING RESIDENTIAL CENTER

440 EAST HILL ROAD
WILLITS, CALIFORNIA, 95490
MENDOCINO COUNTY
CALIFORNIA CONSERVATION CORPS

Supervisor	Designed	Drawn
RFC	GHJ	BRL

DSA Application No.
02-118630

SHEET TITLE

STRIPING PLAN
ADMIN AND PARKING

DGS Project Number	NMR Project Number
000000000001826	18-6456

Reference North: NORTH

Sheet Scale: AS SHOWN

Sheet Number: C5.02

ISSUE DATE

July 9, 2021

Login Name: tipt
Plot Date: March 25, 2021 - 1:58 pm
File Name: K:\2018\181957_CCC_Willits_Residential_Center\dwg\181957_SITE.dwg
XREFS: X_TOPO | 181957_SDRN | 181957_CORR | x-WRC-site | x-WRC-TOPO | x-WRC-ALTA | Ukiah_WetlandCreation_20200923

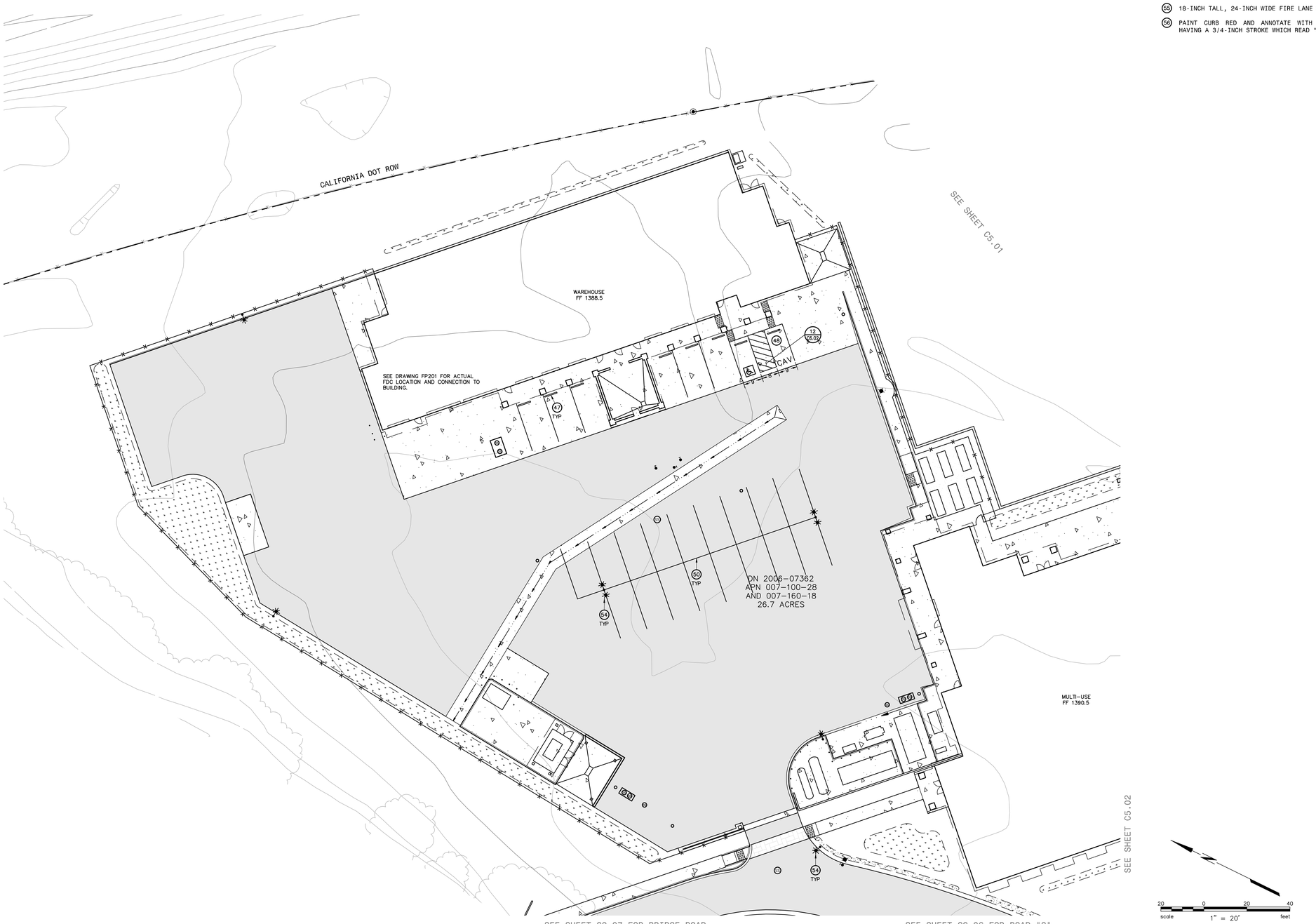

KEYNOTES

47 CONCRETE WHEEL STOP, SET IN EPOXY.

48 'CLEAN AIR VEHICLE' PARKING STALL MARKINGS IN ACCORDANCE WITH SECTION 5.106.5.2.1 OF THE 2019 CALIFORNIA GREEN BUILDING CODE.

49 THERMOPLASTIC DIAGONAL 5-FOOT WIDE SOLID WHITE STRIPING WHERE SHOWN ON PLAN HAVING 4-INCH WIDE STRIPES AT 36-INCHES ON CENTER.

50 THERMOPLASTIC 4-INCH WIDE SOLID WHITE STRIPING WHERE SHOWN ON PLAN.

51 10-FOOT LONG DIRECTIONAL ARROW WITH SOLID WHITE THERMOPLASTIC PAINT.

52 R1-1 STOP SIGN AND LIMIT SIGN IN ACCORDANCE WITH FIGURE 2B-1 AND SECTIONS 2B.05.02 AND 3B.16.06 OF THE 2014 CALIFORNIA MANUAL ON UNIFORM TRAFFIC CONTROL DEVICES.

53 THERMOPLASTIC 'STOP' LEGEND IN ACCORDANCE WITH CALTRANS 2018 STANDARD PLAN A24D.

54 SITE LIGHTING. REFER TO THE ELECTRICAL DRAWINGS.

55 18-INCH TALL, 24-INCH WIDE FIRE LANE SIGN.

56 PAINT CURB RED AND ANNOTATE WITH 3-INCH TALL WHITE LETTERS HAVING A 3/4-INCH STROKE WHICH READ "NO PARKING FIRE LANE".

IDENTIFICATION STAMP
DIV. OF THE STATE ARCHITECT
APP: 02-118630 INC:
REVIEWED FOR
SS ☐ FLS ☐ ACS ☑
DATE: 04/13/2021

OFFICE OF THE STATE FIRE MARSHAL
APPROVED FIRE AND PANIC ONLY
Approval of this plan does not authorize or approve any omission or deviation from applicable regulations. Final approval is subject to field inspection. One set of approved plans shall be available on the project site at all times.
PERMIT NO. 20-N-2332-CP
REVIEWED BY: LEO CATAYLO, OSFM
DATE: 4 / /2021

GENERAL SERVICES
Department of General Services
State of California
Real Estate Services Division
Project Management & Development Branch
707 Third Street, Suite 4-105
West Sacramento, California 95605

NICHOLS MELBURG & ROSSETTO
ARCHITECTS + ENGINEERS
300 Knollcrest Drive
Redding, CA. 96002
(530) 222-3300 (530) 222-3538 FAX
http://www.nmrdesign.com

Copyright © 2021
All ideas, designs, arrangements and plans indicated or represented by this drawing are owned by, and the property of, NICHOLS, MELBURG and ROSSETTO and were created, evolved and developed for use on, and in conjunction with, the specified project. None of such ideas, designs, arrangements or plans shall be used by, or disclosed to any person, firm or corporation for any purpose whatsoever without the written permission of NICHOLS, MELBURG and ROSSETTO.

LICENSE STAMPS

REGISTERED PROFESSIONAL ENGINEER
GREGORY H. JENNINGS
No. C-68337
CIVIL
STATE OF CALIFORNIA
3/25/2021

CONSULTANT

BKF
200 4th STREET
SUITE 300
SANTA ROSA, CA 95401
(707) 583-8500
www.bkf.com

DRAWING STATUS

CONSTRUCTION DOCUMENTS

ISSUE

No.	Date	Description
1	10/22/2020	INITIAL PLAN REVIEW
2	01/08/2021	AGENCY RESUBMITTAL
3	03/22/2021	AGENCY RESUBMITTAL

If drawing is not 30" x 42" it is a reduced print

PROJECT

RESIDENTIAL CENTER, UKIAH: REPLACEMENT OF EXISTING RESIDENTIAL CENTER

440 EAST HILL ROAD
WILLITS, CALIFORNIA, 95490
MENDOCINO COUNTY
CALIFORNIA CONSERVATION CORPS

Supervisor	Designed	Drawn
RFC	GHJ	BRL

DSA Application No.
02-118630

SHEET TITLE

STRIPING PLAN
WAREHOUSE, STORAGE AND PARKING AREA

DGS Project Number	NMR Project Number
0000000000001826	18-6456

Reference North: NORTH
Sheet Scale: AS SHOWN
Sheet Number: C5.03

ISSUE DATE

July 9, 2021

Login Name: lgt
Plot Date: March 19, 2021 - 6:18 pm
File Name: K:\2018\18957_CCC_Willits_Residential_Center\dwg\18957_SITE.dwg
XREFS: X_CNPO | 18957_SDWK | 18957_COMM | X-MRG-SITE | X-MRG-TOPO | X-MRG-ALTA | Ukiah_WetlandCreation_20200923

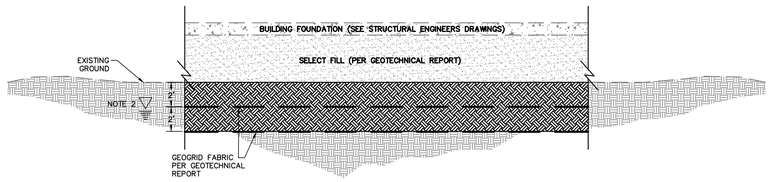

OVEREXCAVATION UNDER BUILDING FOUNDATION

NO SCALE

OVEREXCAVATION NOTE
PER THE GEOTECHNICAL INVESTIGATION TITLED "GEOTECHNICAL INVESTIGATION REPORT" PREPARED BY SHN ENGINEERS & GEOLOGISTS DATED AUGUST 2020, PLEASE NOTE THE FOLLOWING OBSERVATIONS REGARDING EXCAVATION AND FILLS UNDER BUILDING FOUNDATIONS:

LIMITS OF OVEREXCAVATION SHALL EXTEND TO A MINIMUM 5' OUTSIDE THE LIMITS OF THE FOUNDATION.

1. FILL SHALL BE SELECT IMPORT APPROVED BY THE GEOTECHNICAL ENGINEER. TRENCH SPOILS AND OTHER EXCAVATIONS SHALL NOT BE USED AS FILL.
2. GROUNDWATER IS EXPECTED WITHIN 1-FOOT TO 4-FEET OF EXISTING GRADE. GROUNDWATER REMOVAL IS LIKELY TO BE REQUIRED FOR TRENCHING AND EXCAVATION BELOW THESE DEPTHS.
3. EXISTING SOILS LACK COHESION. TRENCH SHORING SHOULD BE ACTIVE SHORING OR SLOPED.
4. REMOVE EXISTING SOIL, PLACE GEOGRID, AND REPLACE EXISTING SOIL RECOMPACTING AND MOISTURE CONDITIONING UNDER THE DIRECTION OF THE GEOTECHNICAL ENGINEER.

MATERIALS TABLE

SURFACE TYPE	LOCATION	THICKNESS	CL2 BASE ROCK	SCARIFY	NOTE
HEAVILY REINFORCED CONCRETE	FUEL TANK AREAS	8"	10"	6"	1
MODERATELY REINFORCED CONCRETE	UTILITY EQUIPMENT AREAS	6"	12"	6"	1
REINFORCED CONCRETE	VEHICULAR AREAS	6"	6"	6"	1
REINFORCED CONCRETE WALKWAY	WALK WAYS – NON VEHICULAR AREAS	4"	4"	6"	2
ASPHALT CONCRETE	PARKING AND DRIVE AREAS	4"	15"	6"	
PERMEABLE PAVING	EMERGENCY VEHICLE AREAS	4"	10"	6"	3

1. PROVIDE GRADE 40 NUMBER 4 BARS AT 16-INCH ON CENTER AND EXPANSION JOINTS IN ACCORDANCE WITH THE CALTRANS STANDARD SPECIFICATIONS. CONCRETE TO HAVE A BROOMED FINISH.
2. REFER TO THE ARCHITECTURAL DRAWINGS FOR JOINT DETAILS AND CONCRETE FINISH.
3. PROVIDE A 2-INCH THICK COURSE OF BEDDING SAND BETWEEN PAVERS AND AGGREGATE BASE.

NOTES
THE CONTRACTOR IS REQUIRED TO REVIEW THE SOILS REPORT PREPARED FOR THIS PROJECT TO CONFIRM THESE CONDITIONS AND TO REVIEW SAID REPORT FOR SITE PREPARATION AND GRADING RECOMMENDATIONS.

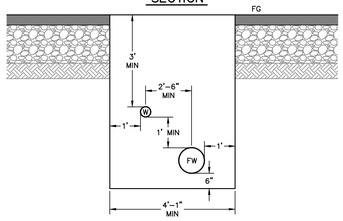

WT — WATER MAIN TRENCH
NO SCALE

NOTES:
1. PARALLEL MAINS ON THE INTERIOR SIDE OF THE TRENCH AT BENDS AND TEES ARE TO BE RESTRAINED WITH MECHANICALLY RESTRAINED JOINTS ONLY AS TO AVOID CONFLICTS WITH THE PARALLEL WATER.
2. CONTRACTOR SHALL SUBMIT CALCULATIONS FOR RESTRAINT LENGTHS FOR MECHANICALLY RESTRAINED JOINTS.
3. THRUST BLOCKS SHALL BE INSTALLED PER CITY OF WILLITS STANDARD DETAILS 519 & 520 SHOWN ON DRAWING C6.04, CITY OF WILLITS STANDARD SPECIFICATIONS, AND THESE CONTRACT DOCUMENTS.
4. PRIOR TO BEGINNING CONSTRUCTION, CONTRACTOR SHALL SUBMIT TO OWNER MANUFACTURER CUT SHEETS FOR ALL PIPING, FITTINGS, ETC. FOR FIRE SERVICE MAINS AND THEIR APPURTENANCES. MANUFACTURER CUT SHEETS SHALL SPECIFY ALL UL LISTINGS PER NFPA 24 REQUIREMENTS.

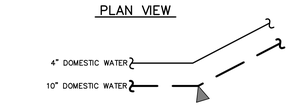

10" FIRE WATER EXTERIOR ANGLE RESTRAINT
NOTE 3

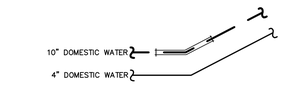

10" FIRE WATER INTERIOR ANGLE RESTRAINT
NOTE 1

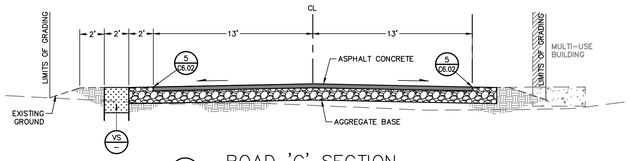

C4 — ROAD 'C' SECTION
NO SCALE

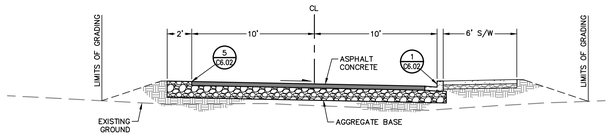

BR — BRIDGE ROAD SECTION
NO SCALE

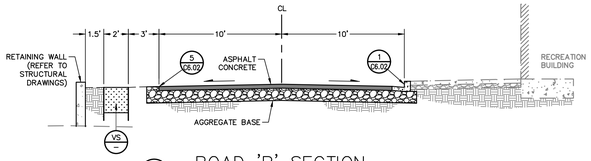

B3 — ROAD 'B' SECTION
NO SCALE

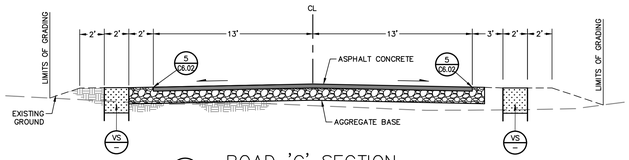

C3 — ROAD 'C' SECTION
NO SCALE

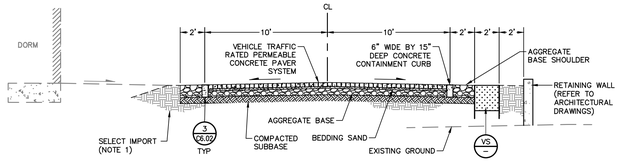

A1 — ROAD 'A' SECTION
NO SCALE

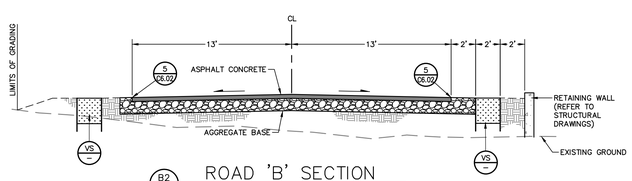

B2 — ROAD 'B' SECTION
NO SCALE

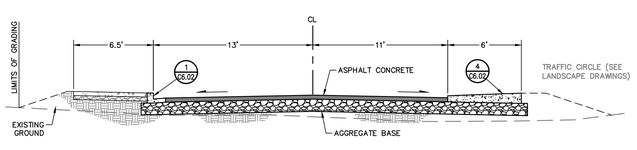

C2 — ROAD 'C' SECTION
NO SCALE

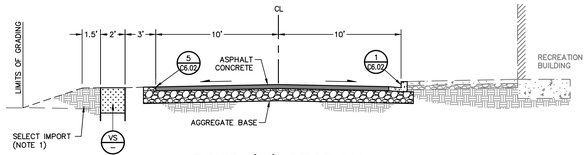

A2 — ROAD 'A' SECTION
NO SCALE

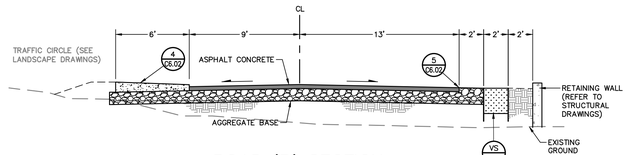

B1 — ROAD 'B' SECTION
NO SCALE

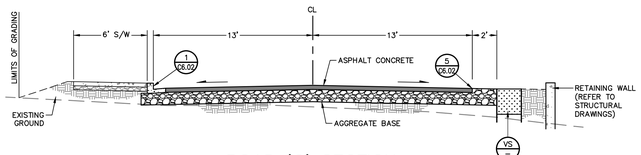

C1 — ROAD 'C' SECTION
NO SCALE

GRADING GENERAL NOTE
PER THE PRELIMINARY GEOTECHNICAL INVESTIGATION TITLED "REPORT OF LIMITED GEOTECHNICAL INVESTIGATION" PREPARED BY SHN ENGINEERS & GEOLOGISTS DATED MAY 2018, PLEASE NOTE THE FOLLOWING OBSERVATIONS REGARDING EXCAVATION AND FILLS:

1. WITHIN THE GRADED AREA SHOWN, CONTRACTOR SHALL REMOVE TOP 4-INCHES OF SOIL AND RECOMPACT PRIOR TO IMPORTING FILL.
2. FILL SHALL BE SELECT IMPORT APPROVED BY THE GEOTECHNICAL ENGINEER. TRENCH SPOILS AND OTHER EXCAVATIONS SHALL NOT BE USED AS FILL.
3. GROUNDWATER IS EXPECTED WITHIN 1-FOOT TO 4-FEET OF EXISTING GRADE. GROUNDWATER REMOVAL IS LIKELY TO BE REQUIRED FOR TRENCHING AND EXCAVATION BELOW THESE DEPTHS.
4. EXISTING SOILS LACK COHESION. TRENCH SHORING SHOULD BE ACTIVE SHORING OR SLOPED.

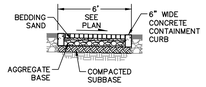

PP — PERMEABLE PATHWAY PAVING
NO SCALE

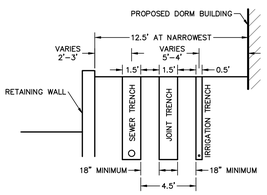

UT — UTILITY TRENCH SECTION
NO SCALE

Login Name: lgt
Plot Date: March 19, 2021 - 6:23 pm
File Name: K:\2018\181957_CCC_Willits_Residential_Center\dwg\181957_SITE.dwg
XREFS: X_TOPO | 181957_SURV | 181957_SURV | x-WRC-site | x-WRC-TOPO | x-WRC-ALTA | Ukiah_WetlandDelin_20200923

IDENTIFICATION STAMP
DIV. OF THE STATE ARCHITECT
APP: 02-118630 INC:
REVIEWED FOR
SS ☐ FLS ☐ ACS ☑
DATE: 04/13/2021

OFFICE OF THE STATE FIRE MARSHAL
APPROVED FIRE AND PANIC ONLY
Approval of this plan does not authorize or approve any omission or deviation from applicable regulations. Final approval is subject to field inspection. One set of approved plans shall be available on the project site at all times.
PERMIT NO. 20-N-2332-CP
REVIEWED BY: LEO CATAYLO, OSFM
DATE: 4 / /2021

DGS GENERAL SERVICES
Department of General Services
State of California
Real Estate Services Division
Project Management & Development Branch
707 Third Street, Suite 4-105
West Sacramento, California 95605

NICHOLS MELBURG & ROSSETTO
ARCHITECTS + ENGINEERS
300 Knollcrest Drive
Redding, CA. 96002
(530) 222-3300 (530) 222-3538 FAX
http://www.nmrdesign.com

Copyright © 2021
All ideas, designs, arrangements and plans indicated or represented by this drawing are owned by, and the property of, NICHOLS, MELBURG and ROSSETTO and were created, evolved and developed for use on, and in conjunction with, the specified project. None of such ideas, designs, arrangements or plans shall be used by, or disclosed to any person, firm or corporation for any purpose whatsoever without the written permission of NICHOLS, MELBURG and ROSSETTO.

LICENSE STAMPS

REGISTERED PROFESSIONAL ENGINEER
GREGORY H. JENNINGS
No. C-68337
CIVIL
STATE OF CALIFORNIA
3/25/2021

CONSULTANT

BKF
200 4th STREET
SUITE 300
SANTA ROSA, CA 95401
(707) 583-8500
www.bkf.com

DRAWING STATUS
CONSTRUCTION DOCUMENTS

ISSUE

No.	Date	Description
1	10/22/2020	INITIAL PLAN REVIEW
2	01/08/2021	AGENCY RESUBMITTAL
3	03/22/2021	AGENCY RESUBMITTAL

If drawing is not 30" x 42" it is a reduced print

PROJECT
RESIDENTIAL CENTER, UKIAH: REPLACEMENT OF EXISTING RESIDENTIAL CENTER
440 EAST HILL ROAD
WILLITS, CALIFORNIA, 95490
MENDOCINO COUNTY
CALIFORNIA CONSERVATION CORPS

Supervisor	Designed	Drawn
RFC	GHJ	BRL

DSA Application No.
02-118630

SHEET TITLE
CIVIL CONSTRUCTION DETAILS & SECTIONS

DGS Project Number: 0000000000001826
NMR Project Number: 18-6456
Reference North
Sheet Scale: AS SHOWN
Sheet Number: C6.01

ISSUE DATE
July 9, 2021

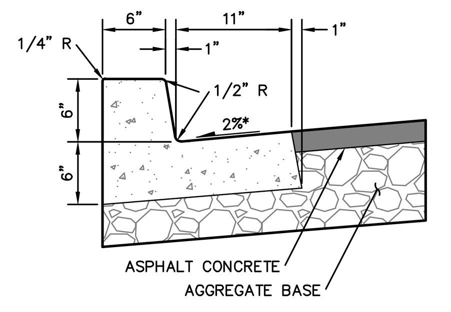

1 CURB DETAIL
NO SCALE

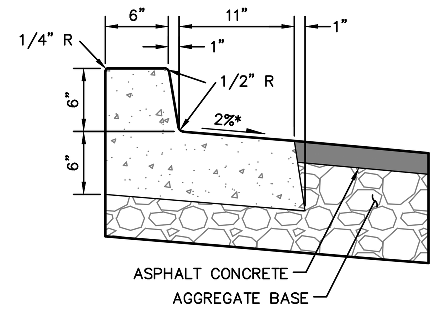

2 CURB DETAIL
NO SCALE

* GUTTER PAN SLOPE NOT TO EXCEED 2% IN ACCESSIBLE AREAS WHERE CURB AND GUTTER ARE PERPENDICULAR TO A CONCRETE SURFACE, GUTTER SLOPE SHALL CONFORM TO ADJACENT CONCRETE SLOPE.

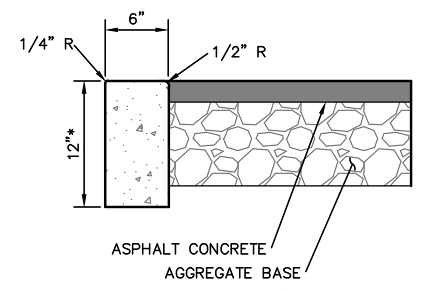

* CURB DEPTH TO BE 12" UNLESS OTHERWISE NOTED IN PLAN

3 CURB DETAIL
NO SCALE

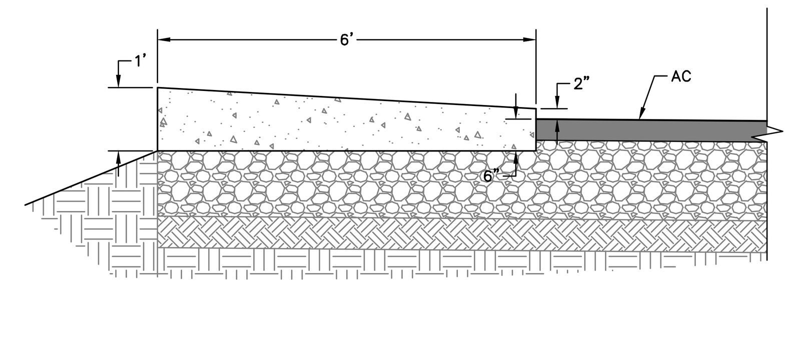

4 ROUNDABOUT
NO SCALE

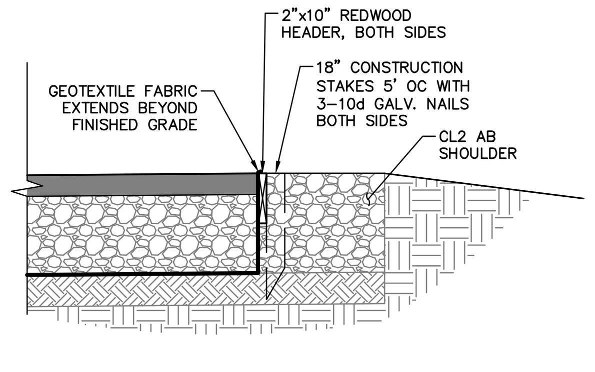

5 ROAD EDGE TREATMENT
NO SCALE

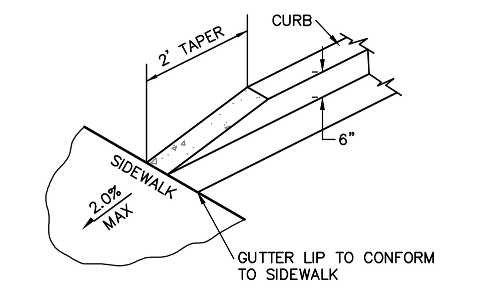

6 CURB TAPER
NO SCALE

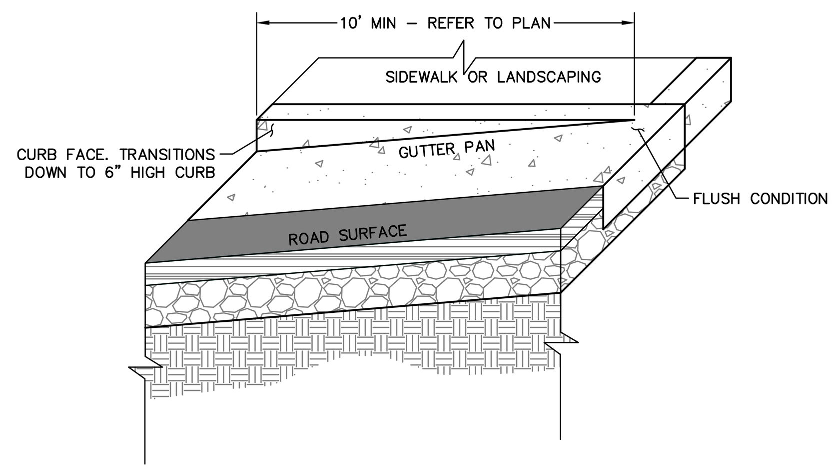

7 TRANSITION CURB
NO SCALE

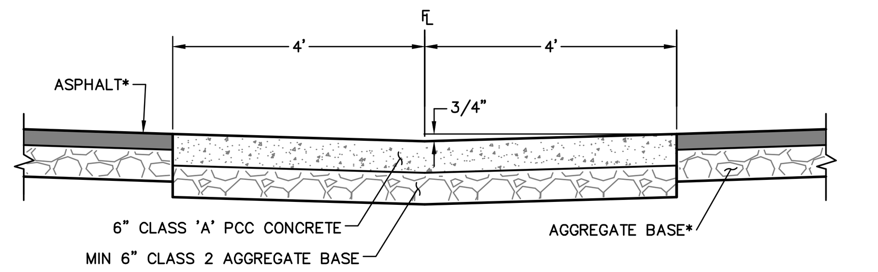

8 VALLEY GUTTER
NO SCALE

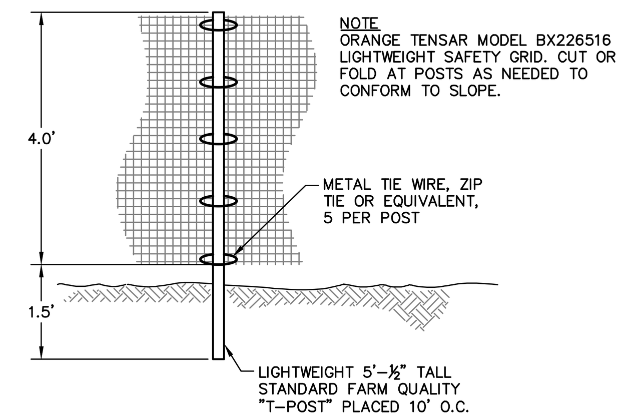

9 PROTECTION FENCE
NO SCALE

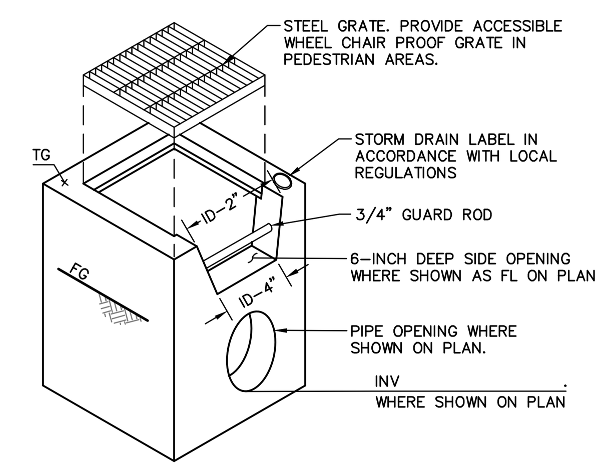

10 GRATE INLET
NO SCALE

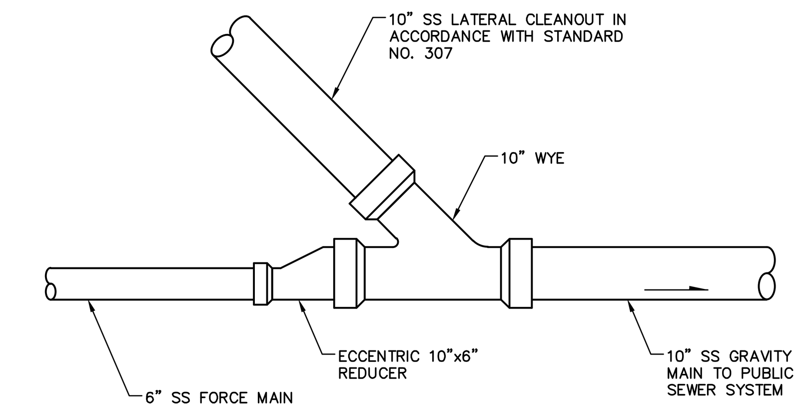

11 FORCE MAIN CONNECTION
NO SCALE

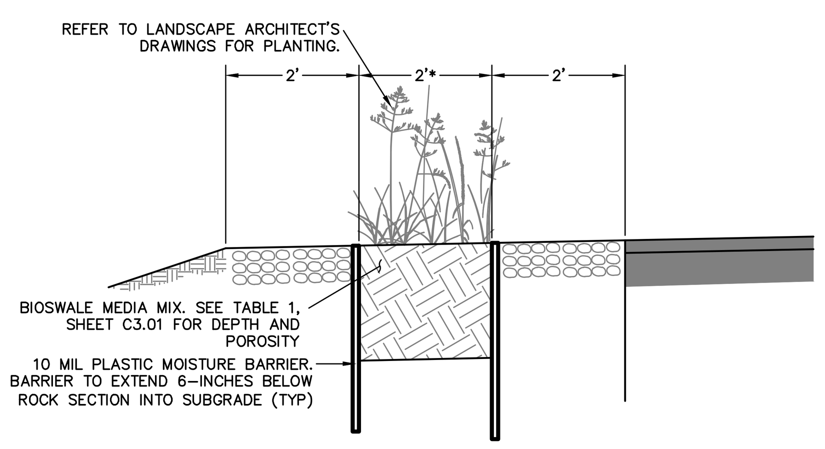

VS VEGETATED SWALE
NO SCALE

* WIDTH IS 2' UNLESS OTHERWISE NOTED.

REFER TO THE LANDSCAPE ARCHITECT'S DRAWINGS FOR PLANTING.

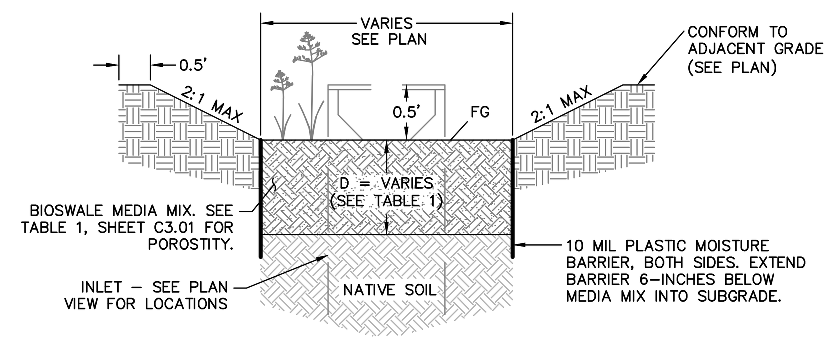

BF BIORETENTION FACILITY
NO SCALE

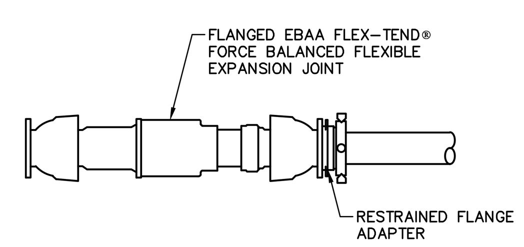

19 FLEXIBLE JOINT
NO SCALE

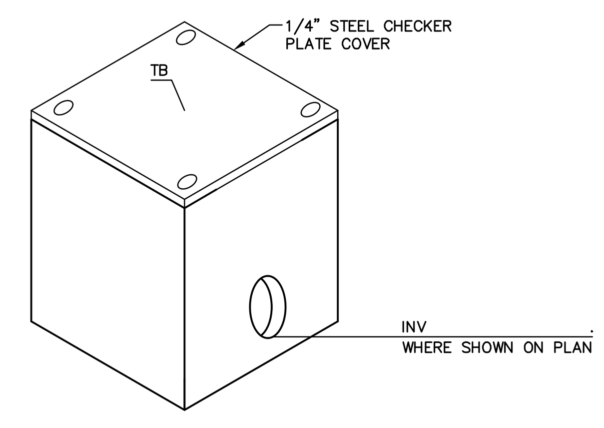

20 DROP INLET
NO SCALE

NOTES
INSTALL SIGN NO LESS THAN 17" WIDE BY 22" HIGH POSTED EITHER 1) IN A CONSPICUOUS PLACE AT EACH ENTRANCE TO AN OFF-STREET PARKING FACILITY OR 2) IMMEDIATELY ADJACENT TO ONSITE ACCESSIBLE PARKING AND VISIBLE FROM EACH PARKING SPACE WHICH READS "UNAUTHORIZED VEHICLES PARKED IN DESIGNATED ACCESSIBLE SPACES NOT DISPLAYING DISTINGUISHING PLACARDS OR SPECIAL LICENSE PLATES ISSUED FOR PERSONS WITH DISABILITIES WILL BE TOWED AWAY AT THE OWNERS EXPENSE. TOWED VEHICLES MAY BE RECLAIMED AT: ________ OR BY TELEPHONING ________." (BLANK SPACES SHALL BE FILLED IN WITH APPROPRIATE INFORMATION AS A PERMANENT PART OF THE SIGN.)

70 SQ. IN. DARK BLUE REFLECTIVE PORCELAIN, ENAMEL STEEL SIGN WITH WHITE INTERNATIONAL SYMBOL OF ACCESSIBILITY MOUNTED 80" OFF F.G. ON 1.5" Ø STEEL POST. PROVIDE AN ADDITIONAL SIGN OR ADDITIONAL LANGUAGE BELOW THE SYMBOL OF ACCESSIBILITY WHICH READS "MINIMUM FINE $250." VAN SPACE SHALL HAVE AN ADDITIONAL "VAN ACCESSIBLE" SIGN MOUNTED BELOW THE SYMBOL OF ACCESSIBILITY PER CBC SEC 11B-502.6.

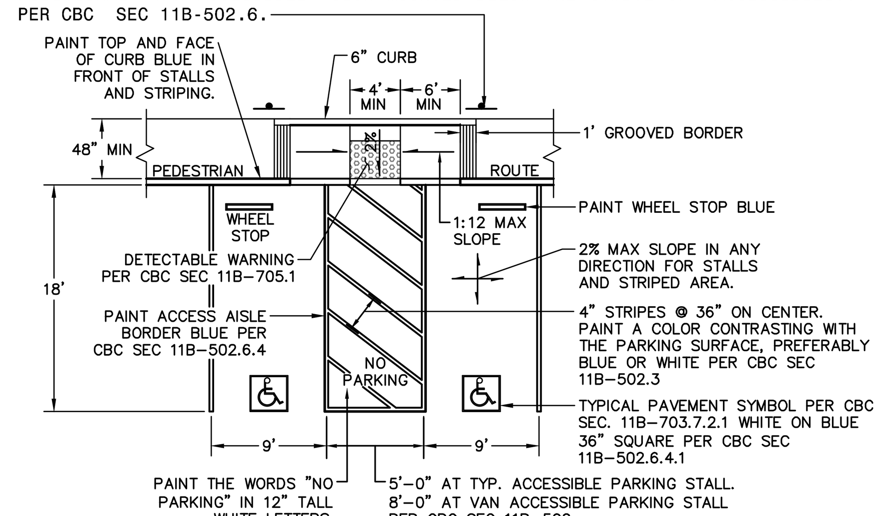

12 ACCESSIBLE PARKING STALLS
NO SCALE

DRAINAGE STRUCTURE TABLE				
STRUCTURE	NO.	MODEL	SIZE	DETAIL
GRATE INLET	1–4, 6–10, 14–22	OLDCASTLE PRECAST MODEL EK OR EQUIVALENT	12"x12"	10/–
GRATE INLET	5, 11–13	OLDCASTLE PRECAST MODEL 2K OR EQUIVALENT	24"x24"	10/–
TRENCH DRAIN	1–2	ACO S100K POWERDRAIN OR EQUIVALENT INSTALLED IN ACCORDANCE WITH MANUFACTURER RECOMMENDATIONS	4"	

NOTE:
ALL VALVE, FITTINGS, AND PIPE SHALL MEET AWWA AND NFPA STANDARDS

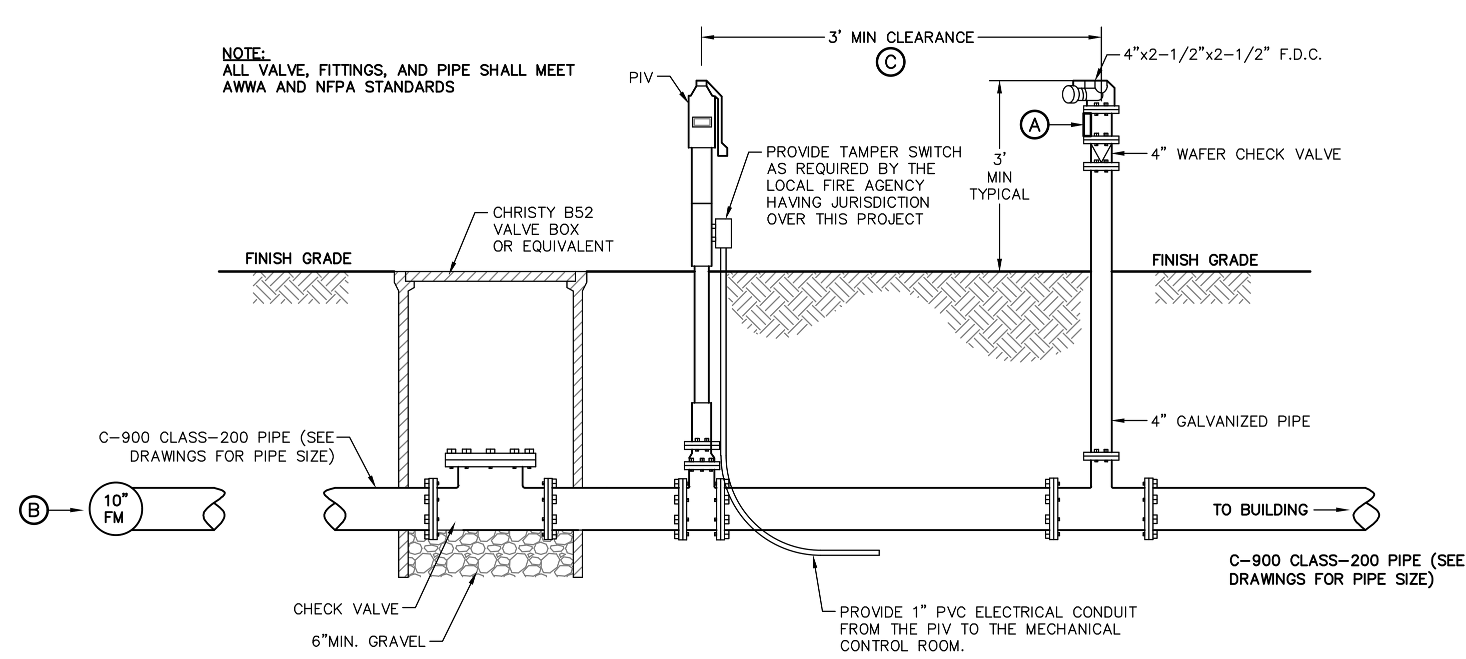

FD FIRE DEPARTMENT CONNECTION (FDC)
NO SCALE

(A) PROVIDE A RED PERMANENT SIGN WHITE ENGRAVED OR STAMPED 1.5-INCH TALL LETTERS, HAVING A 1/4-INCH STROKE, WHICH IDENTIFIES WHICH BUILDING THE FIRE DEPARTMENT PUMPER CONNECTION SERVES. MOUNT THE SIGN ON THE STAND PIPE 4–6 INCHES BELOW THE PUMPER CONNECTION IN A MANNER WHICH MAY BE READ FROM THE DRIVE LANE.

(B) TEES AND JOINTS SHALL BE RESTRAINED EITHER MECHANICALLY OR USING THRUST BLOCKS (STD 519, SHEET C6.04). CONTRACTOR SHALL PLAN RESTRAINTS ACCORDINGLY BASED ON LOCATION, ELEVATION AND DIRECTION OF TEE RELATIVE TO 4"DOMESTIC WATER LINE (SEE PLAN VIEW).

(C) 3' MIN CLEARANCE APPLIES TO ANY OTHER OBJECTS (BENCHES, BOLLARDS, BUILDINGS, ETC.)

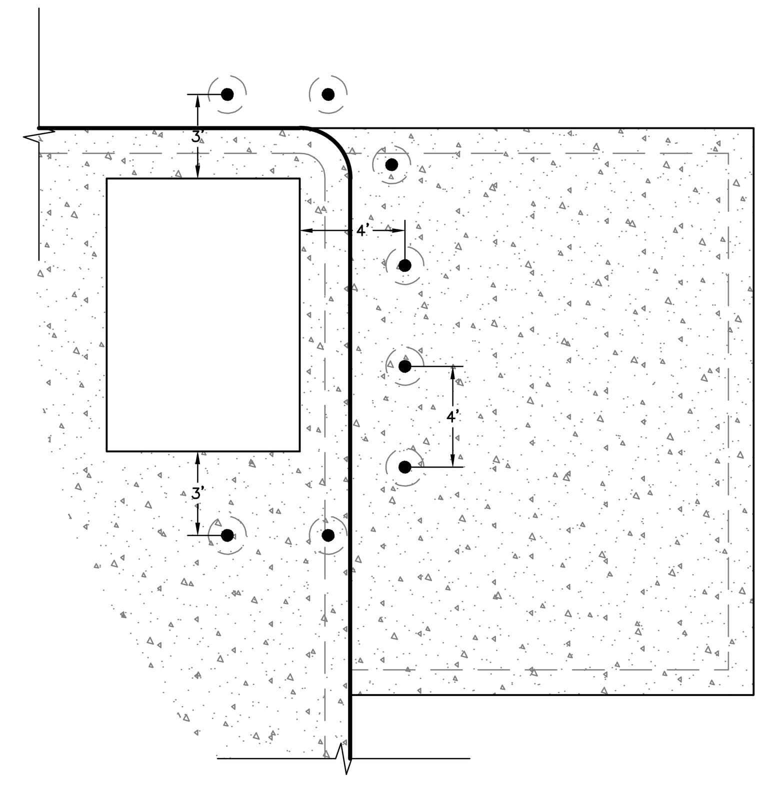

13 FUEL TANK AND FUELING SLAB
NO SCALE

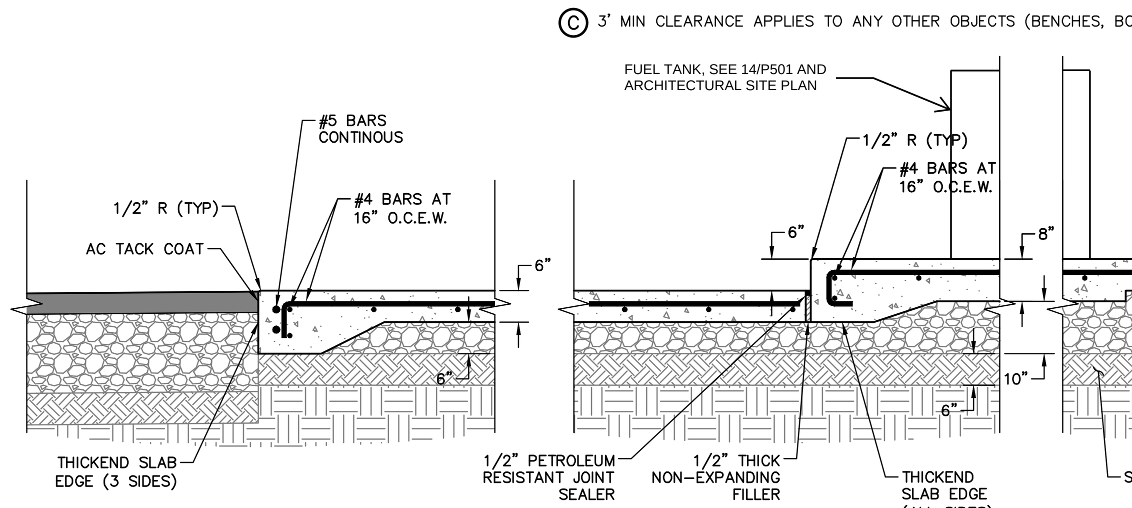

14 FUEL TANK AND FUELING SLAB
NO SCALE

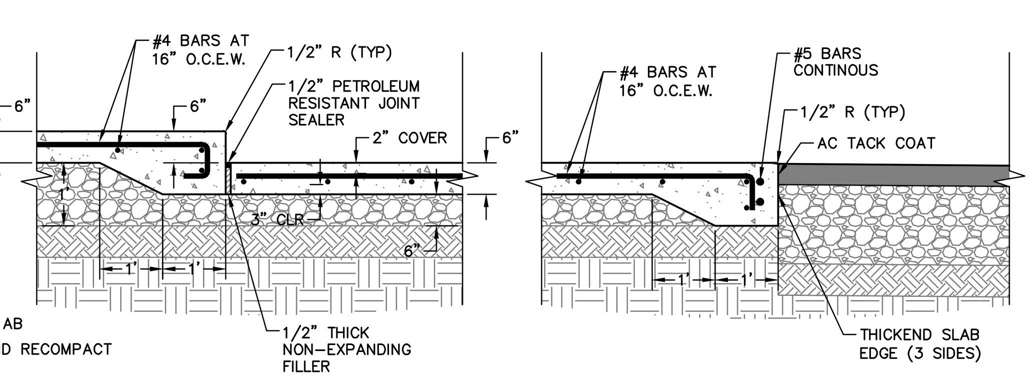

15 WASH AREA SLAB
NO SCALE

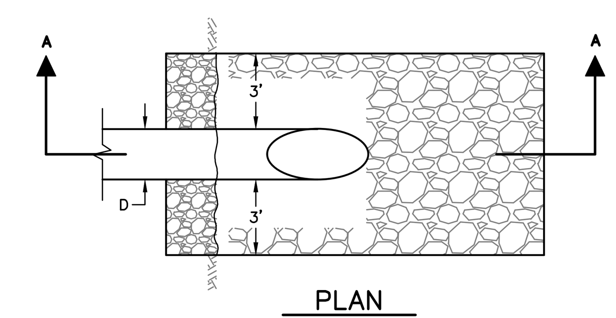

PLAN

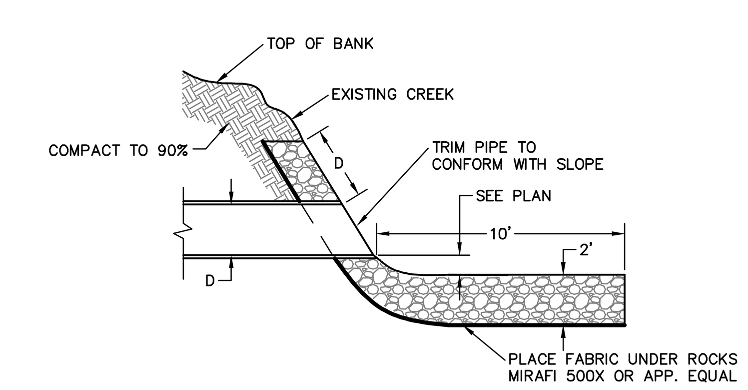

SECTION A–A

SO STORM DRAIN OUTFALL
NO SCALE

IDENTIFICATION STAMP
DIV. OF THE STATE ARCHITECT
APP: 02-118630 INC:
REVIEWED FOR
SS ☐ FLS ☐ ACS ☑
DATE: 04/13/2021

OFFICE OF THE STATE FIRE MARSHAL
APPROVED FIRE AND PANIC ONLY
Approval of this plan does not authorize or approve any omission or deviation from applicable regulations. Final approval is subject to field inspection. One set of approved plans shall be available on the project site at all times.
PERMIT NO.: 20-N-2332-CP
REVIEWED BY: LITO CATAYLO, OSFM
DATE: 4/1/2021

GENERAL SERVICES
Department of General Services
State of California
Real Estate Services Division
Project Management & Development Branch
707 Third Street, Suite 4-105
West Sacramento, California 95605

NICHOLS MELBURG & ROSSETTO
ARCHITECTS + ENGINEERS
300 Knollcrest Drive
Redding, CA. 96002
(530) 222-3300 (530) 222-3538 FAX
http://www.nmrdesign.com

Copyright © 2021
All ideas, designs, arrangements and plans indicated or represented by this drawing are owned by, and the property of, NICHOLS, MELBURG and ROSSETTO and were created, evolved and developed for use on, and in conjunction with, the specified project. None of such ideas, designs, arrangements or plans shall be used by, or disclosed to any person, firm or corporation for any purpose whatsoever without the written permission of NICHOLS, MELBURG and ROSSETTO.

LICENSE STAMPS

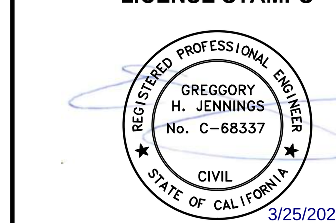

CONSULTANT

BKF
200 4th STREET
SUITE 300
SANTA ROSA, CA 95401
(707) 583-8500
www.bkf.com

DRAWING STATUS
CONSTRUCTION DOCUMENTS

ISSUE

No.	Date	Description
1	10/22/2020	INITIAL PLAN REVIEW
2	01/08/2021	AGENCY RESUBMITTAL
3	03/22/2021	AGENCY RESUBMITTAL

If drawing is not 30" x 42" it is a reduced print

PROJECT
RESIDENTIAL CENTER, UKIAH: REPLACEMENT OF EXISTING RESIDENTIAL CENTER
440 EAST HILL ROAD
WILLITS, CALIFORNIA, 95490
MENDOCINO COUNTY
CALIFORNIA CONSERVATION CORPS

Supervisor	Designed	Drawn
RFC	GHJ	BRL

DSA Application No.
02-118630

SHEET TITLE
CIVIL CONSTRUCTION DETAILS

DGS Project Number: 000000000001826
NMR Project Number: 18-6456
Reference North
Sheet Scale: AS SHOWN
Sheet Number: C6.02
ISSUE DATE
July 9, 2021

Login Name: tipt
Plot Date: March 19, 2021 – 6:26 pm
File Name: K:\2018\181957_CCC_Willits_Residential_Center\dwg\181957_SITE.dwg
XREFS: X_TOPO | 181957_SDRN | 181957_CORR | x–WRC–site | x–WRC–TOPO | x–WRC–ALTA | Ukiah_WetlandCreation_20200923

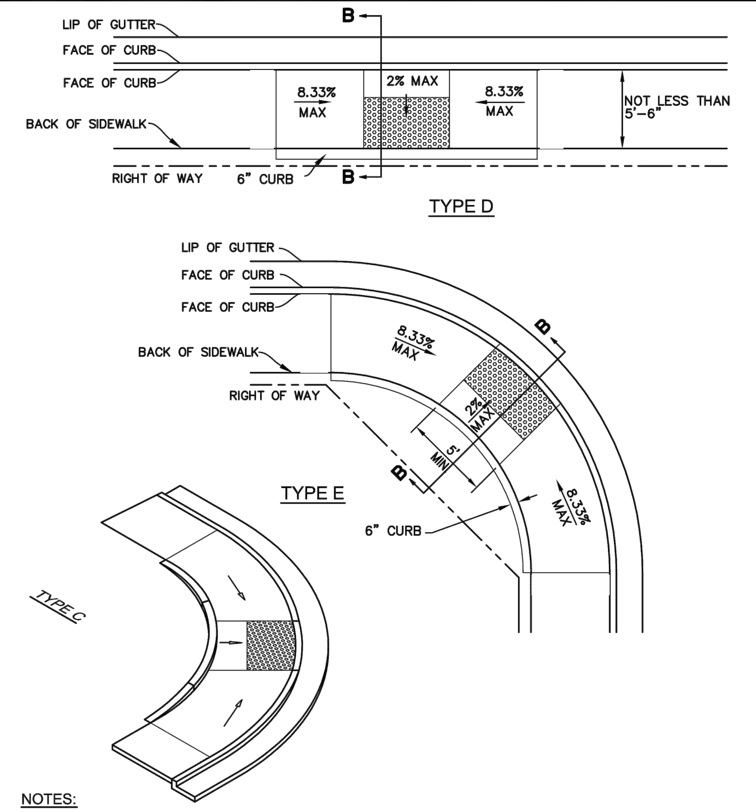

NOTES:

1. RAMP SHALL BE CONSTRUCTED WITH NO LIP AT GUTTER FLOWLINE.
2. TYPE D AND E RAMPS SHALL BE LOCATED AT THE CENTER OF THE CURB RETURN.
3. CONCRETE SHALL BE CLASS "A" WITH NOT LESS THAN 6 SACKS OF CEMENT PER CUBIC YARD. SIDEWALK AND RAMP THICKNESS SHALL BE 4".
4. NOT USED
5. DESIGN SHALL CONFORM TO THESE REQUIREMENTS, EXCEPT AS OTHERWISE APPROVED BY THE CITY ENGINEER.

SHEET 7 of 12

PEDESTRIAN RAMP TYPE D & E — STD. NO. 209

SCALE: NONE | DRAWN: CFB | CHK: MGK | APPVD: | DATE: OCT 2009

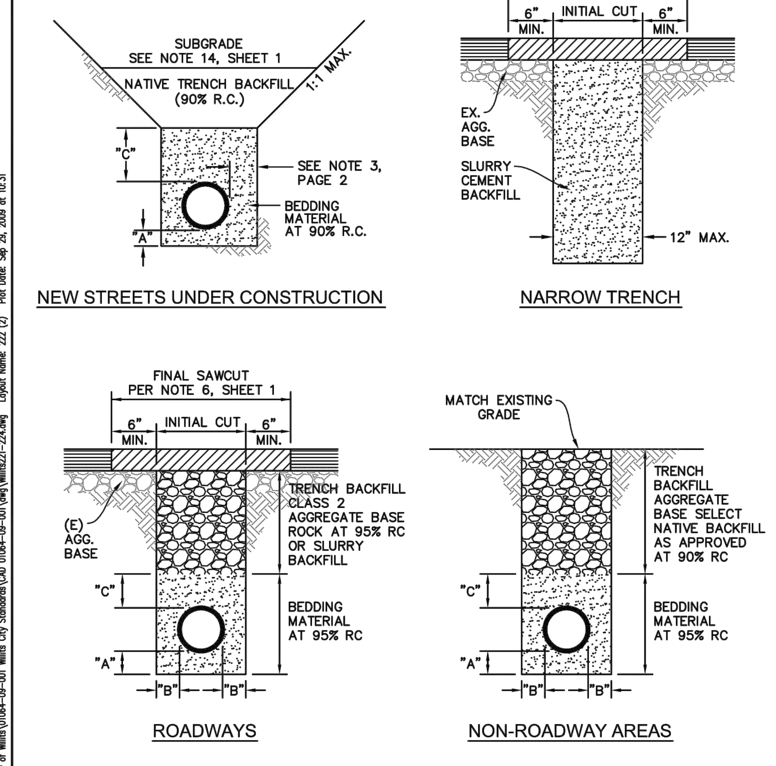

NOTE:
SEE SHEET 1 FOR TRENCH DIMENSIONS

SHEET 2 OF 2

STANDARD TRENCH DETAIL TRENCH BACKFILL — STD. NO. 222

SCALE: NONE | DRAWN: CFB | CHK: MGK | APPVD: | DATE: OCT 2009

DRAFT

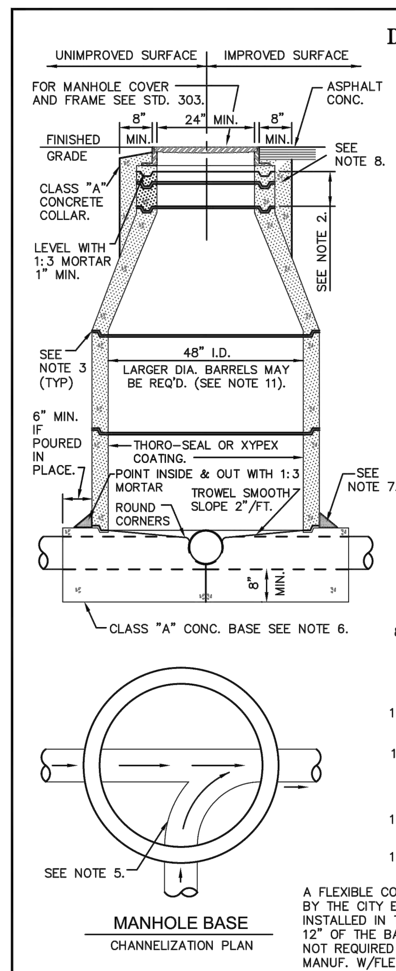

NOTES:

1. WHEN MANHOLES ARE INSTALLED IN UNIMPROVED AREAS, THE TOP OF THE COVER SHALL BE A MIN. OF 1 FOOT ABOVE ADJACENT FINISHED GRADE.
2. MIN. OF ONE 3" AND ONE 6" GRADE ADJUSTMENT RINGS. MAX. HEIGHT OF GRADE ADJUSTMENT RINGS = 20". ALTERNATELY, CONTRACTOR MAY CAST GRADE ADJUSTMENT RINGS IN PLACE.
3. SET ALL BARREL SECTIONS & TAPER SECTIONS IN PLASTIC GASKET, RAM-NEK OR APPROVED ALTERNATE. TYP JOINT 1-1/2" (3/4 X 2-1/2") RAM-NEK SEAL. (2 SEALS IN HIGH WATER TABLE AREAS).
4. CONE SECTION (TAPER) MUST BE CONCENTRIC FOR 48" MANHOLE UNLESS OTHERWISE SPECIFIED AND APPROVED BY THE CITY ENGINEER.
5. CONSTRUCT ALL FLOW CHANNELS OF PIPE WHEREVER POSSIBLE. AFTER LOWER RING SECTION IS SET, BREAK OUT TOP HALF OF PIPE FLUSH WITH INSIDE FACE OF M.H. WALL AND CONSTRUCT SHELF AND U-SHAPED CHANNEL. MAKE ELEVATION CHANGES GRADUALLY AND DIRECTIONAL CHANGES WITH SMOOTH CURVES.
6. POURED-IN-PLACE BASE SHALL BE POURED FULL THICKNESS TO UNDISTURBED SIDES OF EXCAVATION OR SHALL BE FORMED. PRECAST BASE TO BE FROM A DISTRICT APPROVED LIST AND PLACED ON 12" THICK 3/4" DRAIN ROCK SUBBASE INSTALLED AGAINST UNDISTURBED EARTH.
7. JOINT BETWEEN BASE AND BARREL TO BE SEALED W/1-1/2" (3/4" X 2-1/2") RAM-NEK SEAL (2 SEALS IN HIGH WATER TABLE AREAS), AND PLASTER 6" FILLET, 1:3 MORTAR.
8. CLASS "A" CONC. COLLAR SHALL BE 2" BELOW FINISHED GRADE.
9. STANDARD MANHOLE BARREL SECTION PER ASTM C478.
10. BARREL AND TAPER SECTIONS MAY BE CAST IN PLACE AS APPROVED BY THE CITY ENGINEER.
11. 48" I.D. M.H. TO BE USED ONLY FOR SEWER MAINS LESS THAN 18" DIAMETER AND LESS THAN 8 FT. DEEP FROM FINISHED GRADE. 60" I.D. MANHOLES PER STD. 302 FOR ALL OTHER APPLICATIONS.
12. ALL SECTIONS OF MANHOLE MUST BE OF IDENTICAL MAKE AND MANUFACTURER.
13. MANHOLE SHALL BE DEWATERED AND DRY PRIOR TO INSPECTION.

A FLEXIBLE COUPLING, AS APPROVED BY THE CITY ENGINEER, SHALL BE INSTALLED IN THE SEWER MAIN WITHIN 12" OF THE BASE OF THE MANHOLE (TYP). NOT REQUIRED WHEN PRECAST BASES ARE MANUF. W/FLEX. CPLGS. ALREADY INSTALLED.

STANDARD 48" DIA. PRECAST CONCRETE MANHOLE SANITARY SEWER — STD. NO. 301

SCALE: NONE | DRAWN: TM | CHK: TM | APPVD: | DATE: OCT 2009

DRAFT

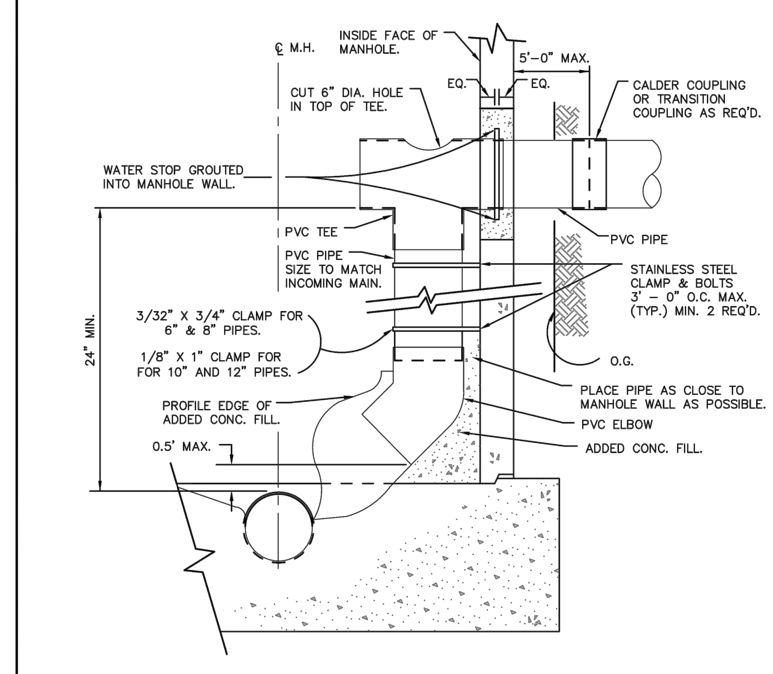

1. INSTALL WATERTOP IN ACCORDANCE WITH MANUFACTURER'S INSTRUCTIONS AS SHOWN.
2. NEW MANHOLES CONSTRUCTED USING THIS STANDARD SHALL BE 60 INCHES IN DIAMETER, & INSTALLED IN CONFORMANCE WITH STD. 302.
3. ENCLOSE ELBOW IN CONCRETE. FORM SMOOTH CHANNEL TO MANHOLE FLOWLINE.
4. PVC PIPE AND FITTINGS TO BE SDR 35 OR SCH 40.

INSIDE DROP INLET SANITARY SEWER MANHOLE — STD. NO. 304

SCALE: NONE | DRAWN: TM | CHK: TM | APPVD: | DATE: OCT 2009

DRAFT

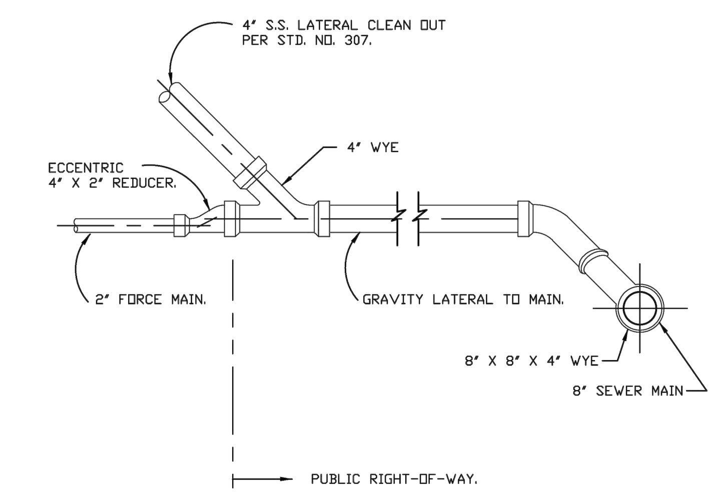

NOTES:

1. MUST BE USED FOR ALL PRIVATE SEWAGE LIFT STATION DISCHARGES. NO DISCHARGES MAY BE MADE DIRECTLY TO THE COLLECTOR SEWER, TRUNK SEWER, OR MANHOLE.
2. ANY ALTERNATE DESIGN MUST BE APPROVED BY THE CITY ENGINEER.
3. CONSTRUCTION DETAILS, SLOPE, AND MATERIALS CONFORM TO STD. NO. 309.

DISCHARGE FOR PRIVATE MAIN — STD. NO. 311

SCALE: NONE | DRAWN: TM | CHK: TM | APPVD: | DATE: OCT 2009

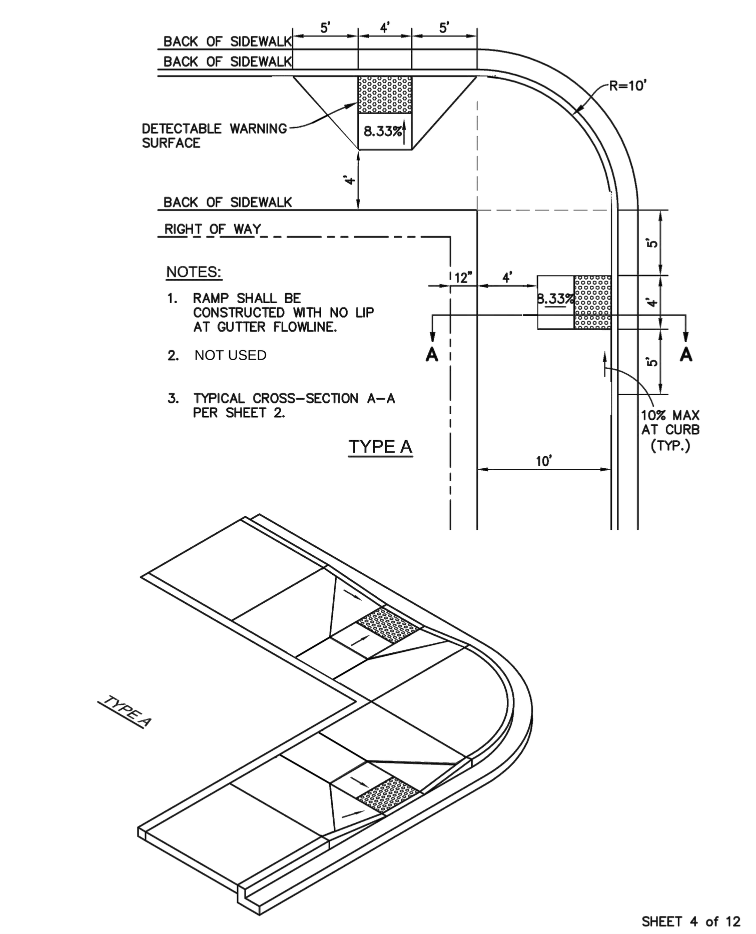

NOTES:

1. RAMP SHALL BE CONSTRUCTED WITH NO LIP AT GUTTER FLOWLINE.
2. NOT USED
3. TYPICAL CROSS-SECTION A-A PER SHEET 2.

SHEET 4 of 12

PEDESTRIAN RAMP TYPE A — STD. NO. 209

SCALE: NONE | DRAWN: CFB | CHK: MGK | APPVD: | DATE: OCT 2009

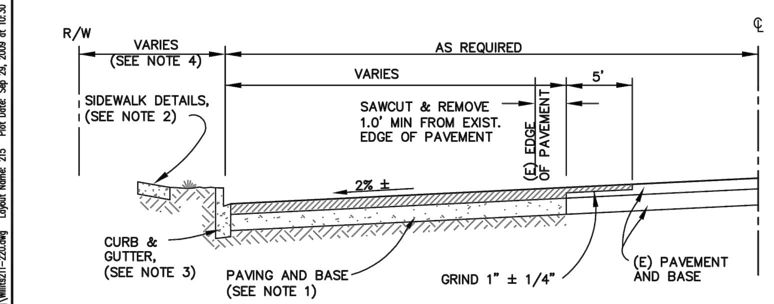

NOTES:

1. PAVING AND BASE THICKNESS TO BE DETERMINED USING CITY PAVEMENT DESIGN STANDARDS. MINIMUM PAVEMENT THICKNESS TO BE 0.25'.
2. SEE STD. 205 FOR SIDEWALK DETAILS.
3. SEE STD. 205 FOR CURB & GUTTER DETAILS.
4. DISTANCE BETWEEN FACE OF CURB AND RIGHT-OF-WAY TO BE PER STDS. 203 AND 204.

STREET WIDENING/PAVEOUT DETAIL — STD. NO. 215

SCALE: NONE | DRAWN: CFB | CHK: MGK | APPVD: | DATE: OCT 2009

DRAFT

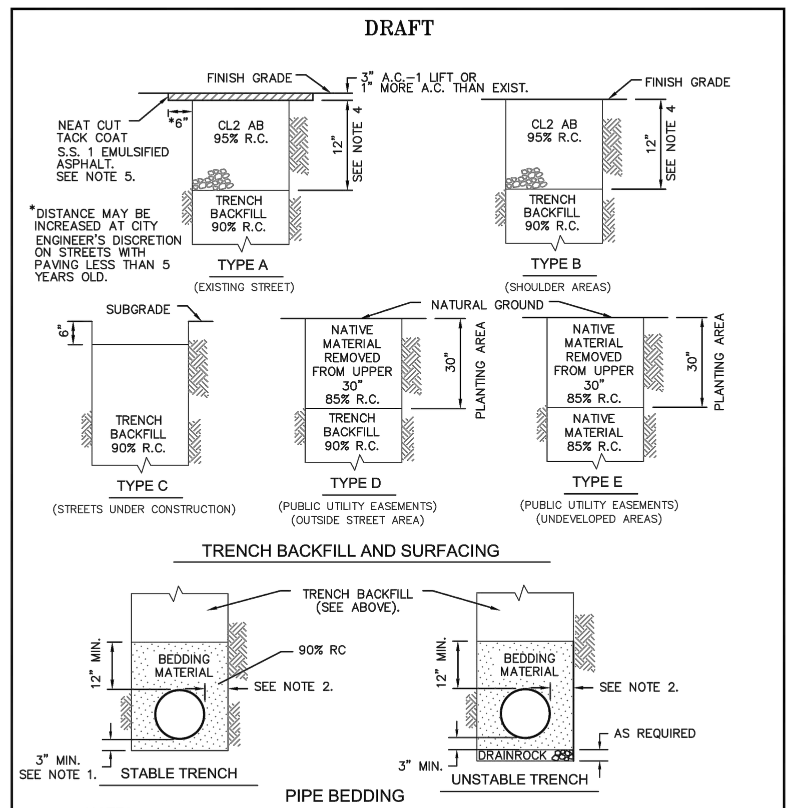

NOTES:

1. 1/4 PIPE O.D. OR 4" MIN. WHEN EXCAVATION IS IN ROCKY GROUND.
2. PIPE DIAMETER 18" OR LESS: 6" MIN., 9" MAX. PIPE DIAMETER GREATER THAN 18": 9" MIN., 12" MAX.
3. RELATIVE COMPACTION DESIGNATED R.C.
4. THE STREET STRUCTURAL SECTION SHALL BE A MIN. OF 3" A.C. ON 12" A.B. OR MATCH EXISTING PAVEMENT THICKNESS PLUS 1" A.C., WHICHEVER IS THICKER OR AS SPECIFIED ON PLANS.
5. NEATLY CUT PAVEMENT SIX INCHES FROM EDGE OF TRENCH AFTER TRENCH IS BACKFILLED.
6. CHECK DAMS (SEE SPECIFICATIONS)

SHEET 1 OF 2

STANDARD TRENCH DETAIL — STD. NO. 300

SCALE: NONE | DRAWN: TM | CHK: TM | APPVD: | DATE: OCT 2009

DRAFT

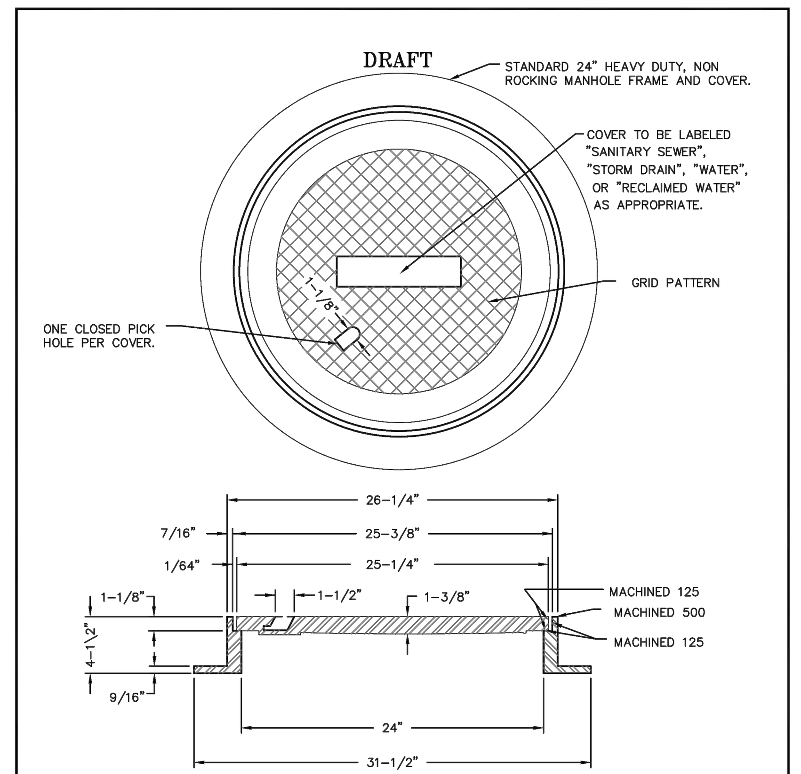

NOTES:

1. SPECIFY SANITARY SEWER WHEN ORDERING. ALL CASTINGS SHALL BE DIPPED IN APPROVED ASPHALT PAINT.
2. ALL MATERIAL USED IN MANUFACTURING SHALL CONFORM TO A.S.T.M. DESIGNATION 48-30, OR TO UNITED STATES GOVERNMENT SPECIFICATIONS QQI-652B.
3. MINIMUM WEIGHT COMPONENTS: COVER – 130 POUNDS, FRAME – 135 POUNDS
4. SEE CITY'S APPROVED LIST FOR MANHOLE FRAME AND COVER.

STANDARD MANHOLE FRAME AND COVER — STD. NO. 303

SCALE: NONE | DRAWN: TM | CHK: TM | APPVD: | DATE: OCT 2009

DRAFT

NOTES:

PIPE BEDDING AND TRENCH BACKFILL MATERIAL SHALL BE A WELL GRADED MATERIAL AND SHALL HAVE A MINIMUM SAND EQUIVALENT VALUE OF 30 AND SHALL CONFORM TO THE FOLLOWING GRADINGS:

	PERCENT PASSING					
	3"	3/4"	3/8"	NO.4	NO.16	NO.200
PIPE BEDDING		100	80–100	10–50	5–30	0–4
TRENCH BACKFILL	NATIVE MATERIAL MAY BE USED					

IN ADDITION, WHEN TESTED WITH THE FOLLOWING SERIES OF SIEVES, NO MORE THAN 25% OF THE MATERIAL WILL BE RETAINED BETWEEN ANY ADJACENT SIEVES: 3", 2-1/2", 2", 1-1/2", 1", 3/4", 1/2", 3/8", NO. 4, NO. 8, NO. 16, NO. 30, NO. 50, NO. 100, AND NO. 200.

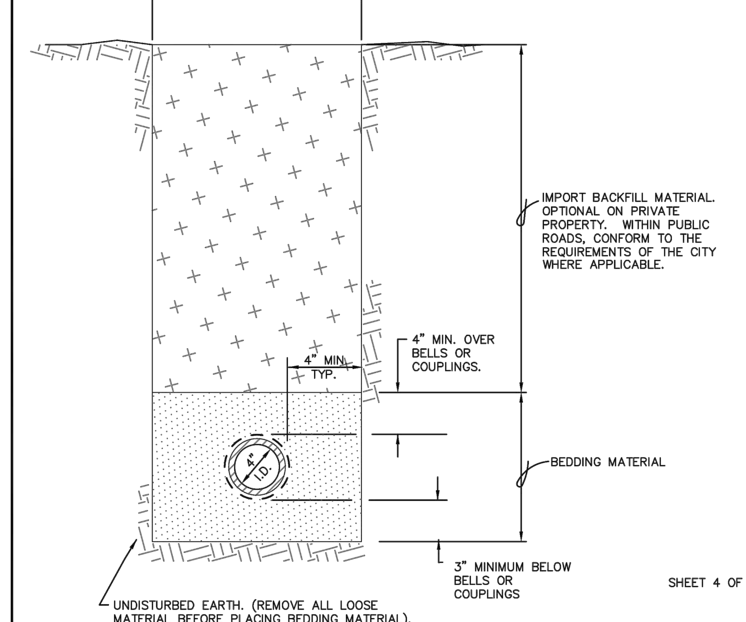

SHEET 4 OF 4

SEWER SERVICE TRENCH DETAIL — STD. NO. 310

SCALE: NONE | DRAWN: TM | CHK: TM | APPVD: | DATE: OCT 2009

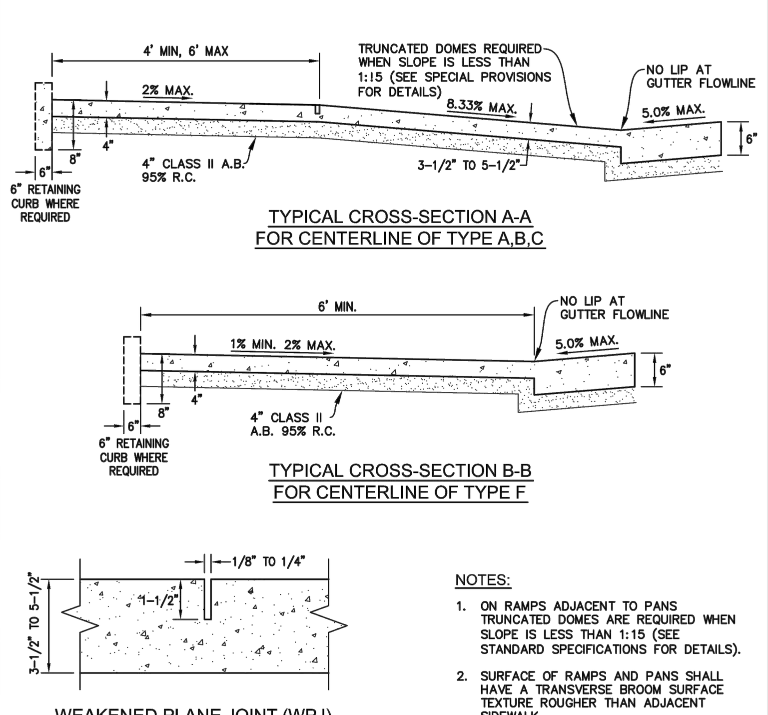

NOTES:

1. ON RAMPS ADJACENT TO PANS TRUNCATED DOMES ARE REQUIRED WHEN SLOPE IS LESS THAN 1:15 (SEE STANDARD SPECIFICATIONS FOR DETAILS).
2. SURFACE OF RAMPS AND PANS SHALL HAVE A TRANSVERSE BROOM SURFACE TEXTURE ROUGHER THAN ADJACENT SIDEWALK.

SHEET 2 OF 12

PEDESTRIAN RAMP GENERAL DETAILS — STD. NO. 209

SCALE: NONE | DRAWN: CFB | CHK: MGK | APPVD: | DATE: OCT 2009

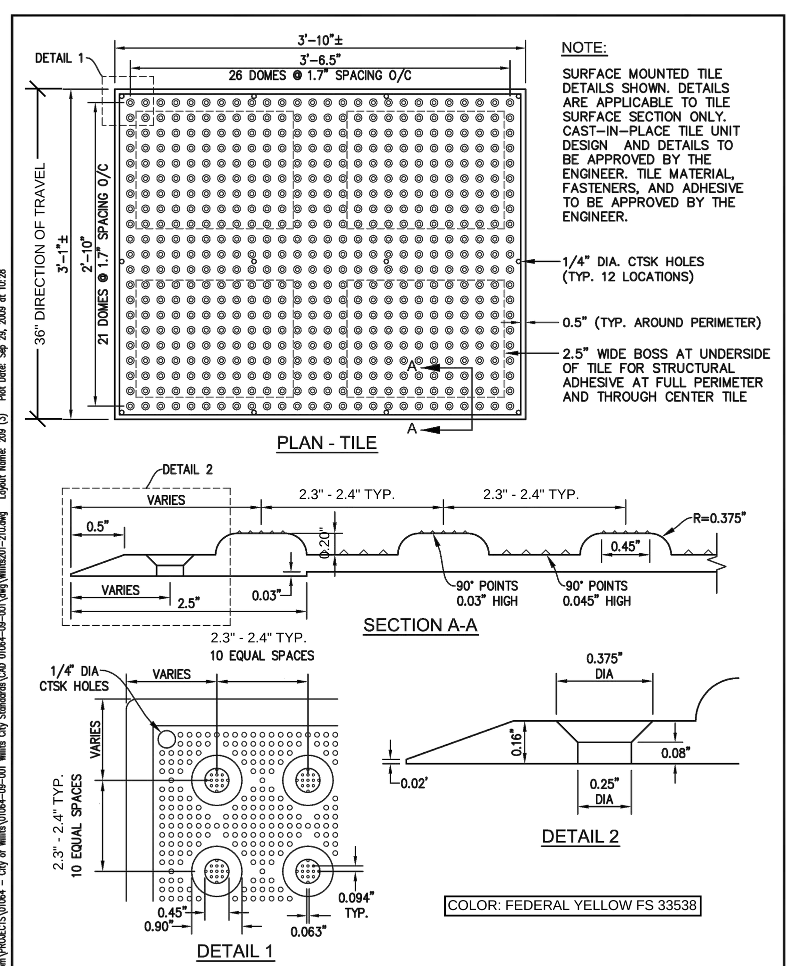

NOTE:

SURFACE MOUNTED TILE DETAILS SHOWN. DETAILS ARE APPLICABLE TO TILE SURFACE SECTION ONLY. CAST-IN-PLACE TILE UNIT DESIGN AND DETAILS TO BE APPROVED BY THE ENGINEER. TILE MATERIAL, FASTENERS, AND ADHESIVE TO BE APPROVED BY THE ENGINEER.

1/4" DIA. CTSK HOLES (TYP. 12 LOCATIONS)

0.5" (TYP. AROUND PERIMETER)

2.5" WIDE BOSS AT UNDERSIDE OF TILE FOR STRUCTURAL ADHESIVE AT FULL PERIMETER AND THROUGH CENTER TILE

COLOR: FEDERAL YELLOW FS 33538

SHEET 3 OF 12

PEDESTRIAN RAMP TRUNCATED DOME DETAILS — STD. NO. 209

SCALE: NONE | DRAWN: CFB | CHK: MGK | APPVD: | DATE: OCT 2009

DRAFT

MATERIAL SPECIFICATIONS:

DRAIN ROCK SHALL BE EITHER OF THE NOMINAL SIZES DESIGNATED AS 1-1/2" BY 3/4" OR 2-1/2" BY 1-1/2".

PIPE BEDDING AND TRENCH BACKFILL MATERIAL SHALL BE A WELL GRADED AGGREGATE (PEA GRAVEL WILL NOT BE ACCEPTED) MATERIAL AND SHALL HAVE A MINIMUM SAND EQUIVALENT VALUE OF 30 AND SHALL CONFORM TO THE FOLLOWING GRADINGS:

	PERCENT PASSING			
	3"	1"	3/4"	NO. 4
PIPE BEDDING		100	95–100	55–100
TRENCH BACKFILL	100			40–100

AGGREGATE BASE SHALL BE CLASS 2, 1-1/2" MAX. OR 3/4" MAX CONFORMING TO THE PROVISIONS OF SECTION 26 OF THE STATE STANDARD SPECIFICATIONS.

NATIVE MATERIAL SHALL NOT CONTAIN ROCKS LARGER THAN 3".

COMPACTION REQUIREMENTS: (AS SHOWN ON SHEET 1 AND IN THE FOLLOWING MODIFICATIONS).

DRAIN ROCK SHALL BE CONSOLIDATED WITH A SURFACE VIBRATOR.

PIPE BEDDING MATERIAL USED TO GRADE THE TRENCH SHALL BE CONSOLIDATED WITH A SURFACE VIBRATOR WHEN IT IS PLACED OVER DRAIN ROCK OR WHEN DEPTH IS GREATER THAN 12".

PIPE BEDDING MATERIAL SHALL EITHER BE HAND TAMPED UNDER AND AT THE SIDES OF THE PIPE IN LIFTS NOT GREATER THAN 6" OR SHAPED AND COMPACTED PRIOR TO PIPE INSTALLATION.

GENERAL: THE COMPACTION REQUIREMENTS SHALL BE ACHIEVED UTILIZING METHODS AND EQUIPMENT APPROVED BY THE CITY. ANY METHOD OF COMPACTION WHICH FAILS TO UNIFORMLY ACHIEVE THE REQUIRED LEVELS OF COMPACTION THROUGHOUT THE LENGTH AND DEPTH OF TRENCHES SHALL BE DISCONTINUED. COMPACTION METHODS AND EQUIPMENT SHALL BE SUCH AS NOT TO DAMAGE THE INSTALLED PIPE, EXCEED ITS LOADING CAPACITY, OR DISTURB ITS ALIGNMENT. FLOODING, PONDING, OR THE USE OF DROP HAMMER TYPE COMPACTION EQUIPMENT WILL NOT BE ALLOWED.

MECHANICAL COMPACTION: TRENCH BACKFILL SHALL BE PLACED IN UNIFORM, HORIZONTAL LAYERS NOT EXCEEDING EIGHT (8) INCHES IN THICKNESS BEFORE COMPACTION. EACH LAYER SHALL BE COMPACTED, USING MECHANICAL MEANS, TO THE SPECIFIED DENSITY SHOWN ON THE PLANS.

THE CONTRACTOR MAY, AT HIS SOLE OPTION AND AT HIS SOLE EXPENSE, CONSTRUCT A TEST TRENCH SECTION WHICH DEMONSTRATES METHODS, EQUIPMENT, OR MATERIALS WHICH WILL RELIABLY ACHIEVE THE REQUIRED COMPACTION IN LIFTS GREATER THAN 8 INCHES. AT ITS SOLE DISCRETION, THE CITY MAY INCREASE THE MAXIMUM ALLOWABLE LIFT THICKNESS PERMITTED BASED UPON THE RESULTS DEMONSTRATED BY THE TEST TRENCH SECTION. SHOULD SUBSEQUENT TESTING DEMONSTRATE THAT THE REQUIRED COMPACTION IS NOT BEING RELIABLY ACHIEVED, THE CITY MAY, AT ITS SOLE DISCRETION, REDUCE THE MAXIMUM LIFT THICKNESS TO ITS ORIGINAL VALUE OF 8 INCHES.

JETTING: JETTING IS NOT ALLOWED.

SHEET 2 OF 2

STANDARD TRENCH DETAIL — STD. NO. 300

SCALE: NONE | DRAWN: TM | CHK: TM | APPVD: | DATE: OCT 2009

DRAFT

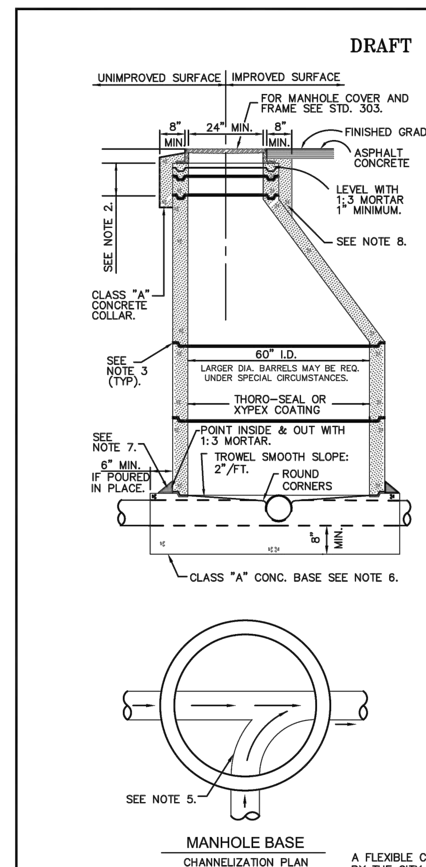

NOTES:

1. WHEN MANHOLES ARE INSTALLED IN UNIMPROVED AREAS, THE TOP OF THE COVER SHALL BE A MIN. OF 1 FOOT ABOVE ADJACENT FINISHED GRADE.
2. MIN. OF ONE 3" AND ONE 6" GRADE ADJUSTMENT RINGS. MAX. HEIGHT OF GRADE ADJUSTMENT RINGS = 20". ALTERNATELY, CONTRACTOR MAY CAST GRADE ADJUSTMENT RINGS IN PLACE.
3. SET ALL BARREL SECTIONS & TAPER SECTIONS IN PLASTIC GASKET, RAM-NEK OR APPROVED ALTERNATE. TYP JOINT 1-1/2" (3/4" X 2-1/2")RAM-NEK SEAL (2 SEALS IN HIGH WATER TABLE AREAS).
4. CONE SECTION (TAPER) MUST BE ECCENTRIC FOR 60" MANHOLE UNLESS OTHERWISE SPECIFIED AND APPROVED BY THE CITY ENGR.
5. CONSTRUCT ALL FLOW CHANNELS OF PIPE WHEREVER POSSIBLE. AFTER LOWER RING SECTION IS SET, BREAK OUT TOP HALF OF PIPE FLUSH WITH INSIDE FACE OF M.H. WALL AND CONSTRUCT SHELF AND U-SHAPED CHANNEL. MAKE ELEVATION CHANGES GRADUALLY AND DIRECTIONAL CHANGES WITH SMOOTH CURVES.
6. POURED-IN-PLACE BASE SHALL BE POURED FULL THICKNESS TO UNDISTURBED SIDES OF EXCAVATION OR SHALL BE FORMED. PRECAST BASE TO BE FROM DISTRICT APPROVED LIST AND PLACED ON 12" THICK 3/4" DRAIN SUB-BASE INSTALLED AGAINST UNDISTURBED EARTH.
7. JOINT BETWEEN BASE AND BARREL TO BE SEALED W/1-1/2" (3/4" X 2-1/2") RAM-NEK SEAL (2 SEALS IN HIGH WATER TABLE AREAS), AND PLASTER 6" FILLET, 1:3 MORTAR.
8. CLASS "A" CONC. COLLAR SHALL BE 2" BELOW FINISHED GRADE.
9. STANDARD MANHOLE BARREL SECTION PER ASTM C478.
10. BARREL AND TAPER SECTIONS MAY BE CAST IN PLACE AS APPROVED BY THE CITY ENGINEER.
11. 60" I.D. MANHOLE TO BE USED FOR ALL TRUNK AND COLLECTOR SEWERS 18" TO 30" PR WHERE DIMENSION FROM FINISHED GRADE TO THE SEWER FLOW LINE IS GREATER THAN 8'-0", AS INDICATED ON THE DESIGN PLAN.
12. ALL SECTIONS OF MANHOLE MUST BE OF IDENTICAL MAKE AND MANUFACTURER.
13. ALL SECTIONS OF MANHOLE MUST BE OF IDENTICAL MAKE AND MANUFACTURER.
14. MANHOLE SHALL BE DEWATERED AND DRY PRIOR TO INSPECTION.

A FLEXIBLE COUPLING, AS APPROVED BY THE CITY ENGINEER, SHALL BE INSTALLED IN THE SEWER MAIN WITHIN 12" OF THE BASE OF THE MANHOLE (TYP). NOT REQUIRED WHEN PRECAST BASES ARE MANUF. W/FLEX. CPLGS. ALREADY INSTALLED.

STANDARD 60" DIA. PRECAST CONCRETE MANHOLE SANITARY SEWER — STD. NO. 302

SCALE: NONE | DRAWN: TM | CHK: TM | APPVD: | DATE: OCT 2009

DRAFT

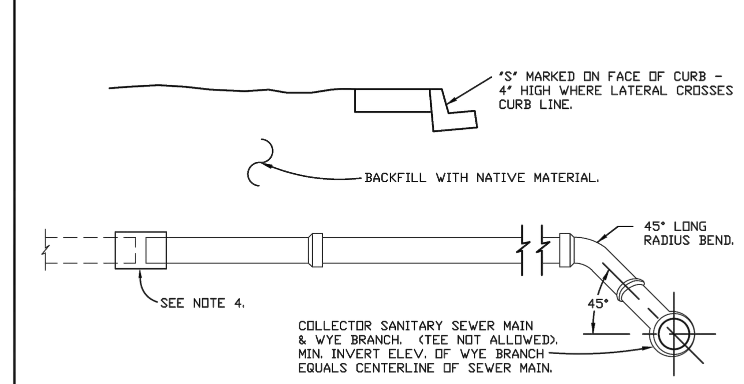

LATERAL CONNECTIONS TO EXISTING MAINS:

PVC, (SDR 35):
4' - 8' : CUT IN WYE
10' & LARGER: GLUE ON SADDLE WITH STRAP TIES. OR APPROVED BY THE CITY ENGINEER.

LATERAL PIPE MATERIAL TO BE 4" MINIMUM AND ONE OF THE FOLLOWING:

DUCTILE IRON PIPE
POLYVINYL CHLORIDE (PVC) PIPE, SDR 35 WHEN USED WITH A MANUFACTURED 'Y' SPECIFICALLY DESIGNED FOR PVC LATERALS. THE 'Y' SHALL BE POLYVINYL CHLORIDE (PVC), SDR 35.

NOTES:

1. THE SEWER SERVICE LATERAL SHALL BE OF SUFFICIENT DEPTH TO ADEQUATELY SERVE THE BUILDING SITE, AND IN NO CASE SHALL BE LESS THAN 3 FT. DEEP AT THE BACK OF THE P.U.E. UNLESS OTHERWISE AUTHORIZED BY THE CITY ENGINEER.
2. WHERE PROBLEMS ARE ANTICIPATED IN PROVIDING SEWER SERVICE TO A GIVEN BUILDING SITE, THE LATERAL INVERT AT THE BACK OF THE P.U.E. SHALL BE STAKED BY THE OWNER'S ENGINEER.
3. MINIMUM 2% SLOPE EXCEPT WHERE A VARIATION IS SPECIFICALLY APPROVED BY THE CITY ENGINEER.
4. WHEN CONNECTING TO EXISTING SEWER LATERAL EXTEND TO 1' BEHIND P.U.E.

SEWER SERVICE LATERAL — STD. NO. 309

SCALE: NONE | DRAWN: TM | CHK: TM | APPVD: | DATE: OCT 2009

IDENTIFICATION STAMP
DIV. OF THE STATE ARCHITECT
APP: 02-118630 INC:
REVIEWED FOR
SS ☐ FLS ☐ ACS ☑
DATE: 04/13/2021

OFFICE OF THE STATE FIRE MARSHAL
APPROVED FIRE AND PANIC ONLY
Approval of this plan does not authorize or approve any omission or deviation from applicable regulations. Final approval is subject to field inspection. One set of approved plans shall be available on the project site at all times.
PERMIT NO.: 20-N-2332-CP
REVIEWED BY: LITO CATAYLO, OSFM
DATE: 4/1/2021

DGS GENERAL SERVICES
Department of General Services
State of California
Real Estate Services Division
Project Management & Development Branch
707 Third Street, Suite 4-105
West Sacramento, California 95605

NM&R
NICHOLS MELBURG & ROSSETTO ARCHITECTS + ENGINEERS
300 Knollcrest Drive
Redding, CA. 96002
(530) 222-3300 (530) 222-3538 FAX
http://www.nmrdesign.com

Copyright © 2020
All ideas, designs, arrangements and plans indicated or represented by this drawing are owned by, and the property of, NICHOLS, MELBURG and ROSSETTO and were created, evolved and developed for use on, and in conjunction with, the specified project. None of such ideas, designs, arrangements or plans shall be used by, or disclosed to any person, firm or corporation for any purpose whatsoever without the written permission of NICHOLS, MELBURG and ROSSETTO.

LICENSE STAMPS
REGISTERED PROFESSIONAL ENGINEER
GREGGORY H. JENNINGS
No. C-68337
CIVIL
STATE OF CALIFORNIA
3/25/2021

CONSULTANT
BkF
ENGINEERS / SURVEYORS / PLANNERS
200 4TH ST, STE. 300 SANTA ROSA, CA 95401
(707) 583-8500 FAX: (707) 583-8539

DRAWING STATUS
PRELIMINARY PLANS
PROJECT CONSTRUCTION STATUS

ISSUE

No.	Date	Description
1	10/22/2020	INITIAL PLAN REVIEW
3	03/22/2021	AGENCY RESUBMITTAL

If drawing is not 30" x 42" it is a reduced print

PROJECT
RESIDENTIAL CENTER, UKIAH: REPLACEMENT OF EXISTING RESIDENTIAL CENTER
440 EAST HILL ROAD
WILLITS, CALIFORNIA, 95490
MENDOCINO COUNTY
CALIFORNIA CONSERVATION CORPS

Supervisor RFC | Designed GHJ | Drawn BRL

DSA Application No. 02-118630

SHEET TITLE
STANDARD DETAILS

DGS Project Number 01826 | NMR Project Number 18-6456

Reference North | Sheet Scale AS SHOWN

Sheet Number C6.03

ISSUE DATE July 9, 2021

Login Name: lake
Plot Date: October 20, 2020 - 10:31 am
File Name: K:\2018\181957_CCC_Willits_Residential_Center\dwg\BLOCKS\CITY DETAILS\CITY DETAILS.dwg
XREFS:

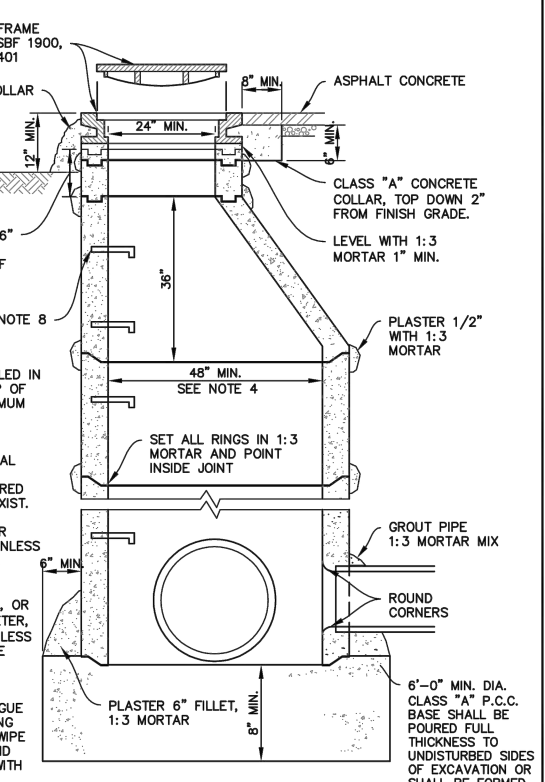

NOTES:

1. WHEN MANHOLES ARE INSTALLED IN UNIMPROVED AREAS, THE TOP OF THE COVER SHALL BE A MINIMUM OF 1 FOOT ABOVE ADJACENT GRADE.
2. RAM–NEK OR APPROVED EQUAL SHALL BE USED IN JOINTS, PLASTERING OF JOINTS REQUIRED IF HIGH WATER CONDITIONS EXIST.
3. CONE SECTION MAY BE EITHER CONCENTRIC OR ECCENTRIC UNLESS OTHERWISE SPECIFIED BY THE DIRECTOR OF PUBLIC WORKS.
4. MANHOLES OVER 7' IN DEPTH, OR WITH A PIPE OVER 36" DIAMETER, SHALL BE 5' IN DIAMETER UNLESS OTHERWISE PERMITTED BY THE DIRECTOR OF PUBLIC WORKS.
5. 5. SET ALL RINGS IN A 1:3 MORTAR BED. WET BOTH TONGUE AND GROOVE BEFORE APPLYING MORTAR AND SETTING RING. WIPE INSIDE OF JOINTS SMOOTH AND PLASTER OUTSIDE OF JOINT WITH 1/2" LAYER OF MORTAR.
6. CONSTRUCT ALL FLOW CHANNELS OF PIPE WHEREVER POSSIBLE. AFTER BASE IS POURED, BREAK OUT TOP HALF OF PIPE FLUSH WITH INSIDE FACE OF M.H. WALL AND CONSTRUCT U–SHAPED CHANNEL. MAKE ELEVATION CHANGES GRADUALLY AND DIRECTIONAL CHANGES WITH SMOOTH CURVES. SET RING BASE IN MORTAR.
7. ALL SECTIONS OF MANHOLE MUST BE OF IDENTICAL MAKE AND MANUFACTURER.
8. STEPS SHALL BE INCLUDED IF MANHOLE DEPTH EXCEEDS 4'. STEPS SHALL BE PLACED 12" O.C. AND SHALL BE STEEL–REINFORCED POLYPROPOLYENE M–A INDUSTRIES PS2–PFS, OR EQUAL.

CITY OF WILLITS — STORM DRAIN MANHOLE — STD. NO. 400
SCALE: NONE | DRAWN: ERJ | CHK: MGK | APPVD: | DATE: OCT 2009

DRAFT

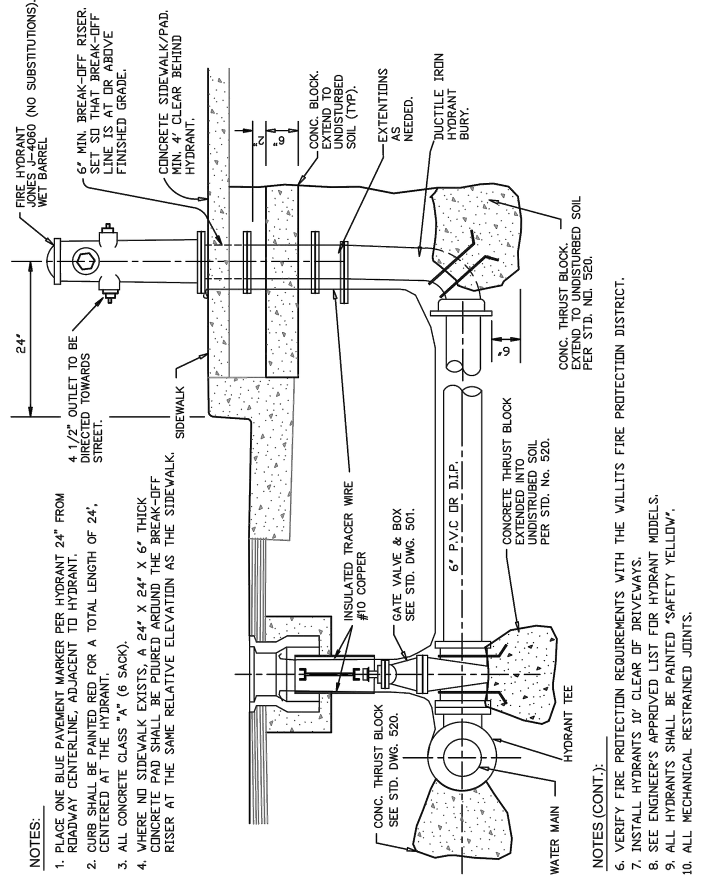

NOTES:

1. PLACE ONE BLUE PAVEMENT MARKER PER HYDRANT 24" FROM ROADWAY CENTERLINE, ADJACENT TO HYDRANT.
2. CURB SHALL BE PAINTED RED FOR A TOTAL LENGTH OF 24', CENTERED AT THE HYDRANT.
3. ALL CONCRETE CLASS "A" (6 SACK).
4. WHERE NO SIDEWALK EXISTS, A 24" X 24" X 6" THICK CONCRETE PAD SHALL BE POURED AROUND THE BREAK-OFF RISER AT THE SAME RELATIVE ELEVATION AS THE SIDEWALK.

NOTES (CONT.):

6. VERIFY FIRE PROTECTION REQUIREMENTS WITH THE WILLITS FIRE PROTECTION DISTRICT.
7. INSTALL HYDRANTS 10' CLEAR OF DRIVEWAYS.
8. SEE ENGINEER'S APPROVED LIST FOR HYDRANT MODELS.
9. ALL HYDRANTS SHALL BE PAINTED "SAFETY YELLOW".
10. ALL MECHANICAL RESTRAINED JOINTS.

CITY OF WILLITS — FIRE HYDRANT INSTALLATION — STD. NO. 502
SCALE: NONE | DRAWN: TM | CHK: TM | APPVD: | DATE: OCT 2009

DRAFT

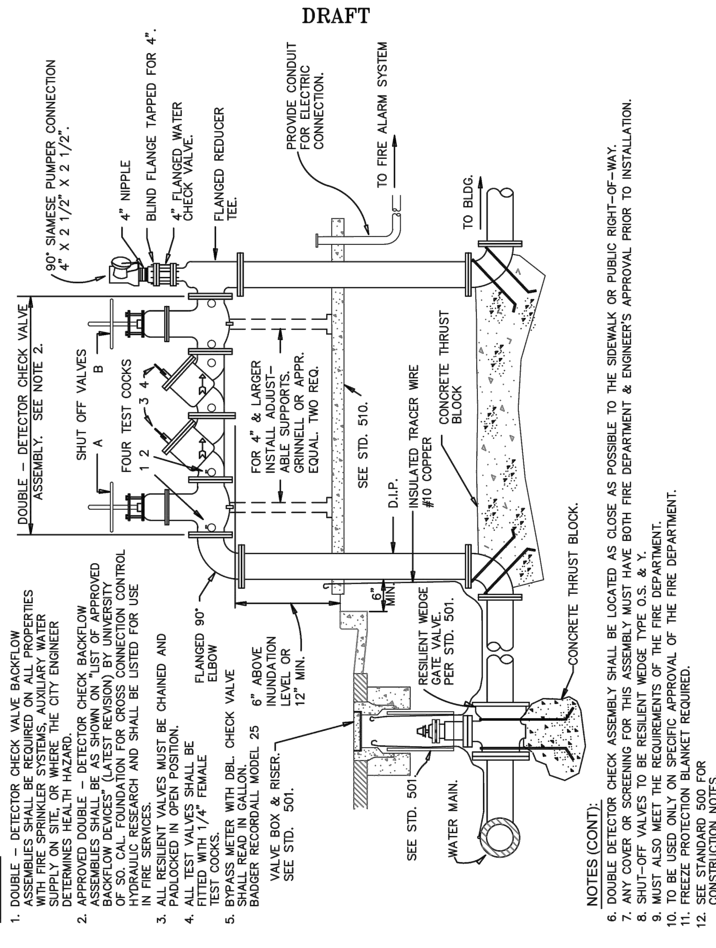

NOTES:

1. DOUBLE – DETECTOR CHECK VALVE BACKFLOW ASSEMBLIES SHALL BE REQUIRED ON ALL PROPERTIES WITH FIRE SPRINKLER SYSTEMS, AUXILIARY WATER SUPPLY ON SITE, OR WHERE THE CITY ENGINEER DETERMINES HEALTH HAZARD.
2. APPROVED DOUBLE – DETECTOR CHECK BACKFLOW ASSEMBLIES SHALL BE AS SHOWN ON "LIST OF APPROVED BACKFLOW DEVICES" (LATEST REVISION) BY UNIVERSITY OF SO. CAL FOUNDATION FOR CROSS CONNECTION CONTROL HYDRAULIC RESEARCH AND SHALL BE LISTED FOR USE IN FIRE SERVICES.
3. ALL RESILIENT VALVES MUST BE CHAINED AND PADLOCKED IN OPEN POSITION.
4. ALL TEST VALVES SHALL BE FITTED WITH 1/4" FEMALE TEST COCKS.
5. BYPASS METER WITH DBL. CHECK VALVE SHALL READ IN GALLON. BADGER RECORDALL MODEL 25

NOTES (CONT):

6. DOUBLE DETECTOR CHECK ASSEMBLY SHALL BE LOCATED AS CLOSE AS POSSIBLE TO THE SIDEWALK OR PUBLIC RIGHT–OF–WAY.
7. ANY COVER OR SCREENING FOR THIS ASSEMBLY MUST HAVE BOTH FIRE DEPARTMENT & ENGINEER'S APPROVAL PRIOR TO INSTALLATION.
8. SHUT–OFF VALVES TO BE RESILENT WEDGE TYPE O.S. & Y.
9. MUST ALSO MEET THE REQUIREMENTS OF THE FIRE DEPARTMENT.
10. TO BE USED ONLY ON SPECIFIC APPROVAL OF THE FIRE DEPARTMENT.
11. FREEZE PROTECTION BLANKET REQUIRED.
12. SEE STANDARD 500 FOR CONSTRUCTION NOTES.

CITY OF WILLITS — FIRE SERVICE DOUBLE–DETECTOR CHECK VALVE — STD. NO. 511
SCALE: NONE | DRAWN: TM | CHK: TM | APPVD: | DATE: OCT 2009

DRAFT

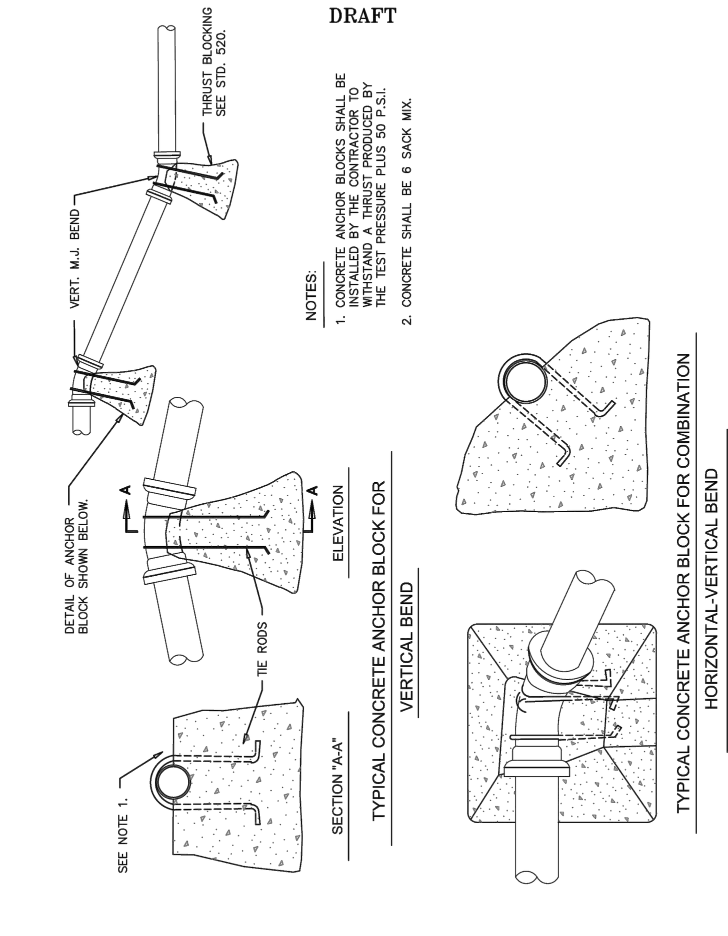

NOTES:

1. CONCRETE ANCHOR BLOCKS SHALL BE INSTALLED BY THE CONTRACTOR TO WITHSTAND A THRUST PRODUCED BY THE TEST PRESSURE PLUS 50 P.S.I.
2. CONCRETE SHALL BE 6 SACK MIX.

TYPICAL CONCRETE ANCHOR BLOCK FOR VERTICAL BEND

TYPICAL CONCRETE ANCHOR BLOCK FOR COMBINATION HORIZONTAL-VERTICAL BEND

CITY OF WILLITS — CONCRETE ANCHOR BLOCK FOR VERICAL BENDS — STD. NO. 519
SCALE: NONE | DRAWN: TM | CHK: TM | APPVD: | DATE: OCT 2009

DRAFT

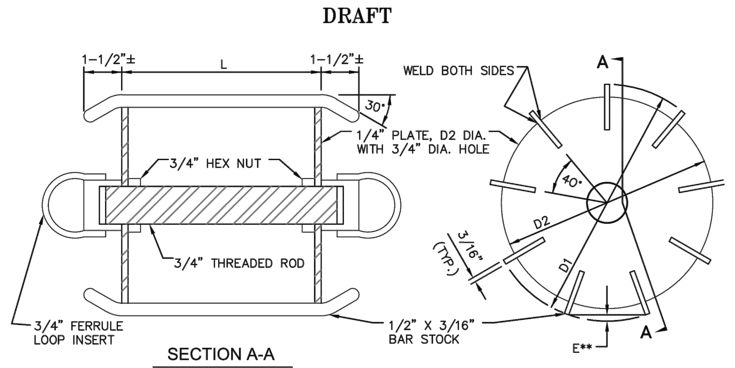

SECTION A-A

		4% DEFLECTION		5% DEFLECTION			
		PVC ASTM D 2680		ABS ASTM D 2751 PVC ASTM D 3034		ASTM D 2680	
		COMPOSITE (I)		SDR35		COMPOSITE (I)	
NOM. DIA.	L	D(2)	R(3)	D(2)	D(3)	D(2)	R(3)
6"	6"	5.544	4.544	5.629	4.629	5.492	4.492
8"	8"	7.473	6.473	7.537	6.537	7.402	6.402
10"	10"	9.401	8.401	9.421	8.421	9.312	8.312
12"	12"	11.330	10.330	11.210	10.210	11.223	10.223
15"	15"	14.222	13.222	13.729	12.729	14.088	13.088

1. TRUSS PIPE – ABS OR PVC.
2. GAGE DIAMETER HAS BEEN CALCULATED TO CORRECT CHORD LENGTH ERROR "E".
3. MINIMUM PLATE DIAMETER.
4. A PROVING RING OF THE SPECIFIED DIAMETER (D) SHALL BE SUPPLIED WITH EACH DEFLECTION GAGE.

NOTES:

1. MARK ALL GAGES WITH ASTM SPECIFICATION NUMBER, SDR NUMBER AND DEFLECTION.
2. THE 1/2" BAR STOCK ON EDGE PROVIDES CLEARANCE TO PASS SMALL AMOUNTS OF SOIL WHICH MAY BE IN PIPE.

CITY OF WILLITS — PLASTIC SEWER PIPE DEFLECTION GAGE — STD. NO. 314
SCALE: NONE | DRAWN: TM | CHK: TM | APPVD: | DATE: OCT 2009

DRAFT

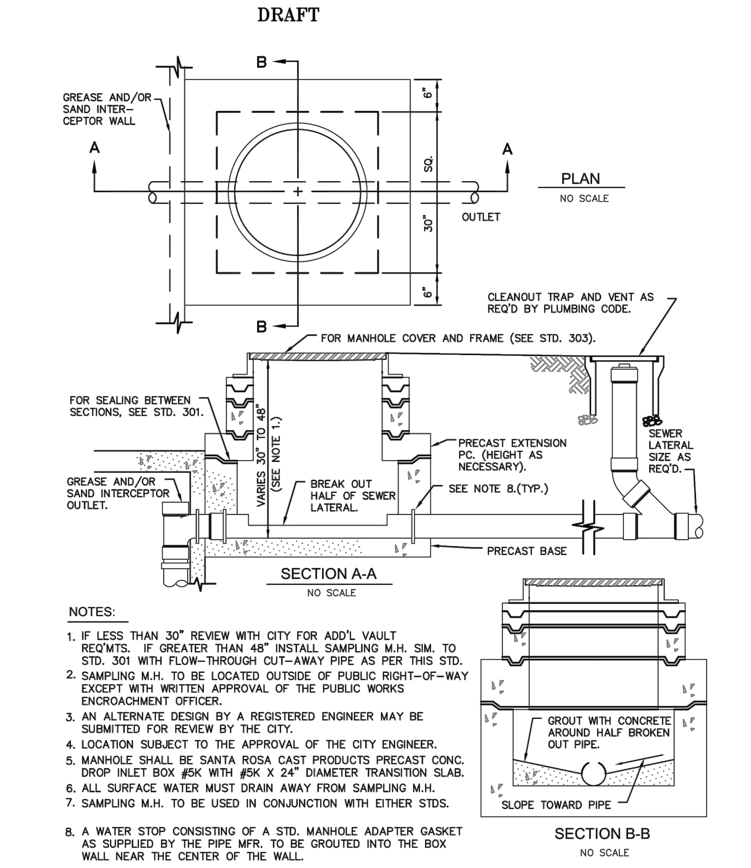

NOTES:

1. IF LESS THAN 30" REVIEW WITH CITY FOR ADD'L VAULT REQ'MTS. IF GREATER THAN 48" INSTALL SAMPLING M.H. SIM. TO STD. 301 WITH FLOW–THROUGH CUT–AWAY PIPE AS PER THIS STD.
2. SAMPLING M.H. TO BE LOCATED OUTSIDE OF PUBLIC RIGHT–OF–WAY EXCEPT WITH WRITTEN APPROVAL OF THE PUBLIC WORKS ENCROACHMENT OFFICER.
3. AN ALTERNATE DESIGN BY A REGISTERED ENGINEER MAY BE SUBMITTED FOR REVIEW BY THE CITY.
4. LOCATION SUBJECT TO THE APPROVAL OF THE CITY ENGINEER.
5. MANHOLE SHALL BE SANTA ROSA CAST PRODUCTS PRECAST CONC. DROP INLET BOX #5K WITH #5K X 24" DIAMETER TRANSITION SLAB.
6. ALL SURFACE WATER MUST DRAIN AWAY FROM SAMPLING M.H.
7. SAMPLING M.H. TO BE USED IN CONJUNCTION WITH EITHER STDS.
8. A WATER STOP CONSISTING OF A STD. MANHOLE ADAPTER GASKET AS SUPPLIED BY THE PIPE MFR. TO BE GROUTED INTO THE BOX WALL NEAR THE CENTER OF THE WALL.

CITY OF WILLITS — SAMPLING MANHOLE EXTERIOR USE — STD. NO. 319
SCALE: NONE | DRAWN: TM | CHK: TM | APPVD: | DATE: OCT 2009

DRAFT

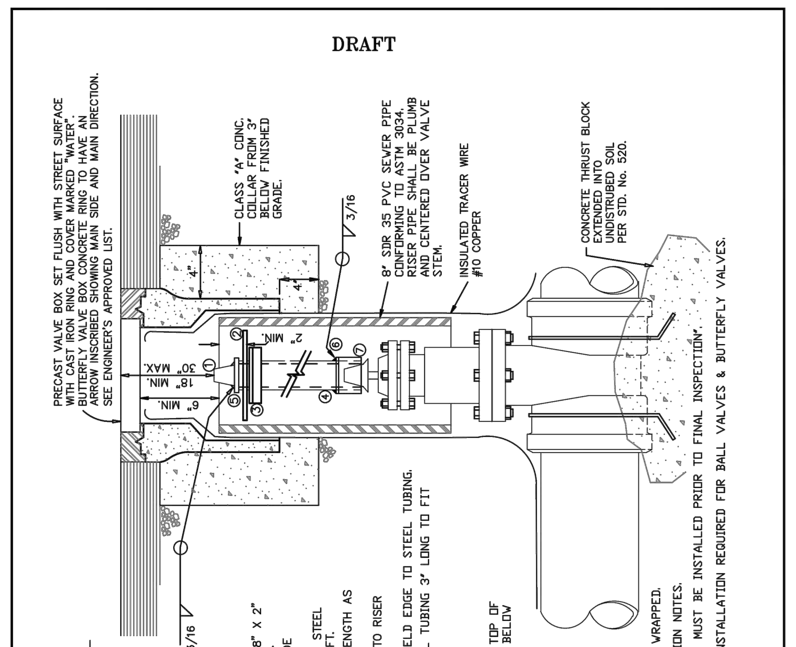

STEM EXTENSION FABRICATION NOTES:

1. ALL WELDS TO RISER SHAFT SHALL BE FILLET WELD ALL AROUND.
2. ALL STEEL REQUIRED FOR RISER FABRICATION SHALL BE STRUCTURAL STEEL PER ASTM A36.

VALVE STEM EXTENSION PARTS LIST:

1. VALVE OPERATING NUT OR 1 7/8" X 1 7/8" X 2" HIGH, SOLID STEEL WELDED TO TOP PLATE.
2. 3/16" THK. X 7" DIA. FREE SPINNING GUIDE PLATE WITH 3 5/8" DIA. HOLE IN CENTER.
3. TWO 3/16" X 1 1/2" X 1 1/2" X 5" LONG STEEL ANGLE WELD TO TWO SIDES OF RISER SHAFT.
4. 2 1/2" X 3/16" SQUARE STEEL TUBING, LENGTH AS REQUIRED. EDGE WELD TO TOP PLATE.
5. 3" X 3" X 1/4" STEEL TOP PLATE. WELD TO RISER SHAFT AFTER GUIDE PLATE IS IN PLACE.
6. 2" X 2" X 1/4" STEEL BASE PLATE. WELD EDGE TO STEEL TUBING.
7. 2" X 2" X 3/16" SQ. STRUCTURAL STEEL TUBING 3" LONG TO FIT OPERATING NUT.

NOTES:

1. IF VALVE IS INSTALLED SO THAT THE TOP OF THE OPERATING NUT IS LESS THAN 30" BELOW FINISHED GRADE, THE VALVE STEM RISER IS NOT REQUIRED.
2. VALVES 2" THROUGH 10" SHALL BE RESILIENT WEDGE GATE VALVES AND VALVES 12" AND LARGER SHALL BE BUTTERFLY VALVES (SEE STD 522) UNLESS OTHERWISE APPROVED BY THE CITY.
3. ALL EXTERNAL BOLTS AND NUTS ON VALVES SHALL BE DUCTILE IRON. VALVE ASSEMBLY SHALL NOT BE POLY WRAPPED.
4. SEE STD. 500 FOR GENERAL CONSTRUCTION NOTES.
5. NOTE ON DRAWING: "VALVE EXTENSIONS MUST BE INSTALLED PRIOR TO FINAL INSPECTION".
6. GATE VALVE ILLUSTRATED. SIMILAR INSTALLATION REQUIRED FOR BALL VALVES & BUTTERFLY VALVES.

CITY OF WILLITS — GATE VALVE AND VALVE BOX WITH RISER — STD. NO. 501
SCALE: NONE | DRAWN: TM | CHK: TM | APPVD: | DATE: OCT 2009

DRAFT

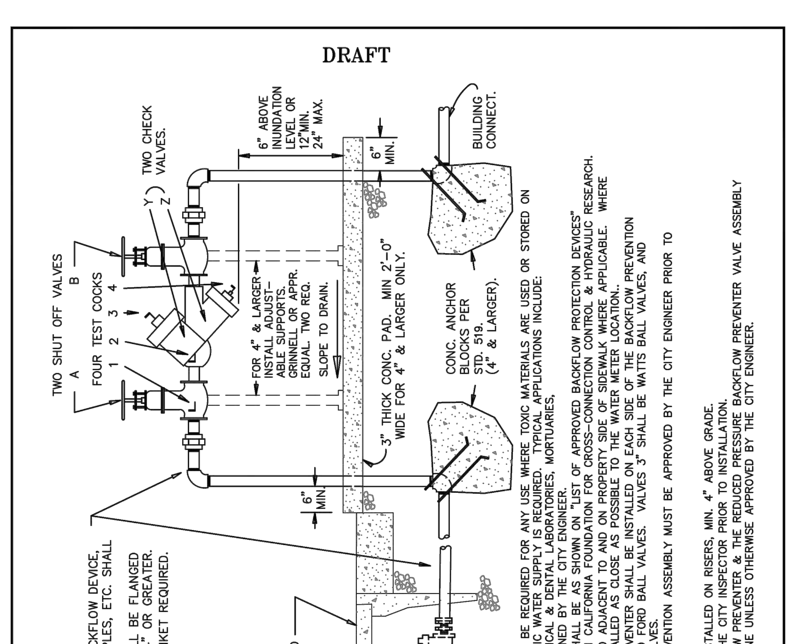

NOTES:

1. REDUCED PRESSURE TYPE BACKFLOW DEVICES SHALL BE REQUIRED FOR ANY USE WHERE TOXIC MATERIALS ARE USED OR STORED ON SITE OR WHERE POSITIVE PROTECTION FOR THE PUBLIC WATER SUPPLY IS REQUIRED. TYPICAL APPLICATIONS INCLUDE: ALL IRRIGATION SERVICES & PARKS, HOSPITALS, MEDICAL & DENTAL LABORATORIES, MORTUARIES, INDUSTRIAL PLANTS, DRY CLEANERS, OR AS DETERMINED BY THE CITY ENGINEER.
2. APPROVED REDUCED PRESSURE BACKFLOW DEVICE SHALL BE AS SHOWN ON "LIST OF APPROVED BACKFLOW PROTECTION DEVICES" (LATEST REVISION) BY THE UNIVERSITY OF SOUTHERN CALIFORNIA FOUNDATION FOR CROSS–CONNECTION CONTROL & HYDRAULIC RESEARCH.
3. BACKFLOW PREVENTION DEVICES SHALL BE INSTALLED ADJACENT TO AND ON PROPERTY SIDE OF SIDEWALK WHERE APPLICABLE. WHERE NO SIDEWALK EXISTS THE ASSEMBLY SHALL BE INSTALLED AS CLOSE AS POSSIBLE TO THE WATER METER LOCATION.
4. A VALVE OF THE SAME SIZE AS THE BACKFLOW PREVENTER SHALL BE INSTALLED ON EACH SIDE OF THE BACKFLOW PREVENTION ASSEMBLY. VALVES 2" & LESS SHALL BE THREADED FORD BALL VALVES. VALVES 3" SHALL BE WATTS BALL VALVES, AND 4" & LARGER SHALL BE RESILIENT SEATED GATE VALVES.
5. ANY COVER OR SCREENING FOR THE BACKFLOW PREVENTION ASSEMBLY MUST BE APPROVED BY THE CITY ENGINEER PRIOR TO INSTALLATION.
6. SEE STANDARD 500 FOR CONSTRUCTION NOTES.
7. IN LIMITED SPACE APPLICATIONS VALVES MAY BE INSTALLED ON RISERS, MIN. 4" ABOVE GRADE.
8. THE ADDITION OF SPOOLS MUST BE APPROVED BY THE CITY INSPECTOR PRIOR TO INSTALLATION.
9. THE PIPING FROM THE REDUCED PRESSURE BACKFLOW PREVENTER & THE REDUCED PRESSURE BACKFLOW PREVENTER VALVE ASSEMBLY ITSELF MUST BE THE SAME SIZE AS THE SERVICE LINE UNLESS OTHERWISE APPROVED BY THE CITY ENGINEER.

CITY OF WILLITS — REDUCED–PRESSURE BACKFLOW PREVENTER — STD. NO. 510
SCALE: NONE | DRAWN: TM | CHK: TM | APPVD: | DATE: OCT 2009

DRAFT

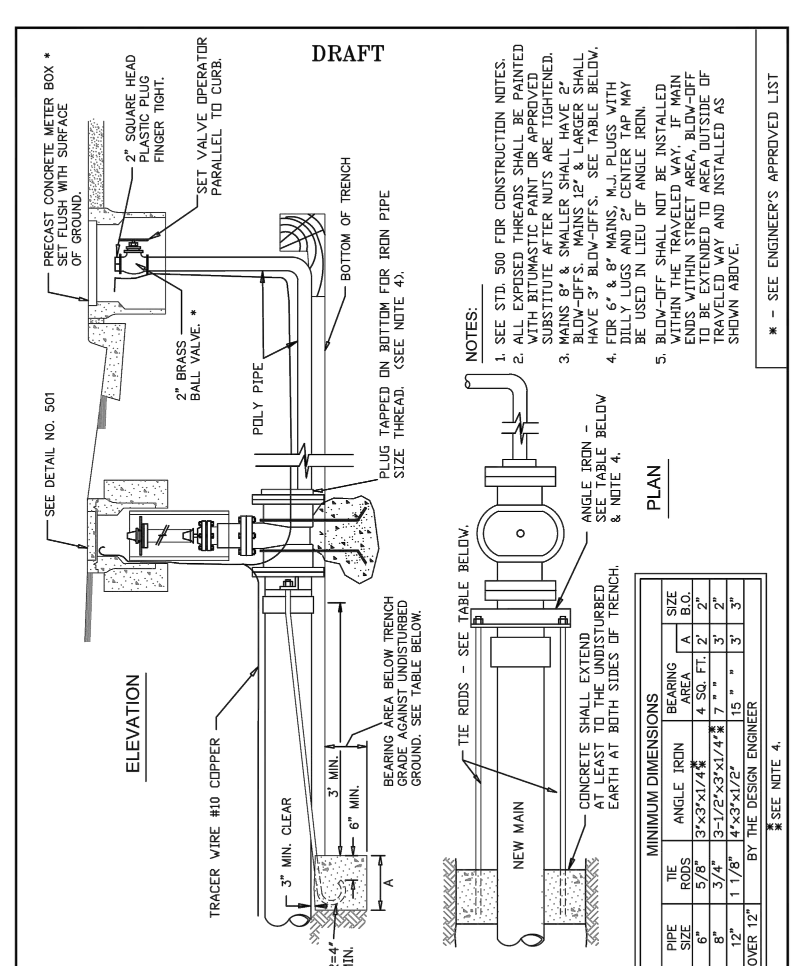

NOTES:

1. SEE STD. 500 FOR CONSTRUCTION NOTES.
2. ALL EXPOSED THREADS SHALL BE PAINTED WITH BITUMASTIC PAINT OR APPROVED SUBSTITUTE AFTER NUTS ARE TIGHTENED.
3. MAINS 8" & SMALLER SHALL HAVE 2" BLOW–OFFS. MAINS 12" & LARGER SHALL HAVE 3" BLOW–OFFS. SEE TABLE BELOW.
4. FOR 6" & 8" MAINS, M.J. PLUGS WITH DILLY LUGS AND 2" CENTER TAP MAY BE USED IN LIEU OF ANGLE IRON.
5. BLOW–OFF SHALL NOT BE INSTALLED WITHIN THE TRAVELED WAY. IF MAIN ENDS WITHIN STREET AREA, BLOW–OFF TO BE EXTENDED TO AREA OUTSIDE OF TRAVELED WAY AND INSTALLED AS SHOWN ABOVE.

* – SEE ENGINEER'S APPROVED LIST

MINIMUM DIMENSIONS

PIPE SIZE	TIE RODS	ANGLE IRON	BEARING AREA	A	SIZE B.O.
6"	5/8"	3"x3"x1/4"*	4 SQ. FT.	2'	2"
8"	3/4"	3-1/2"x3"x1/4"*	7 " "	3'	2"
12"	1 1/8"	4"x3"x1/2"	15 " "	3'	3"
OVER 12"	BY THE DESIGN ENGINEER				

*SEE NOTE 4.

CITY OF WILLITS — BLOWOFF WITH HARNESS — STD. NO. 516
SCALE: NONE | DRAWN: TM | CHK: TM | APPVD: | DATE: OCT 2009

DRAFT

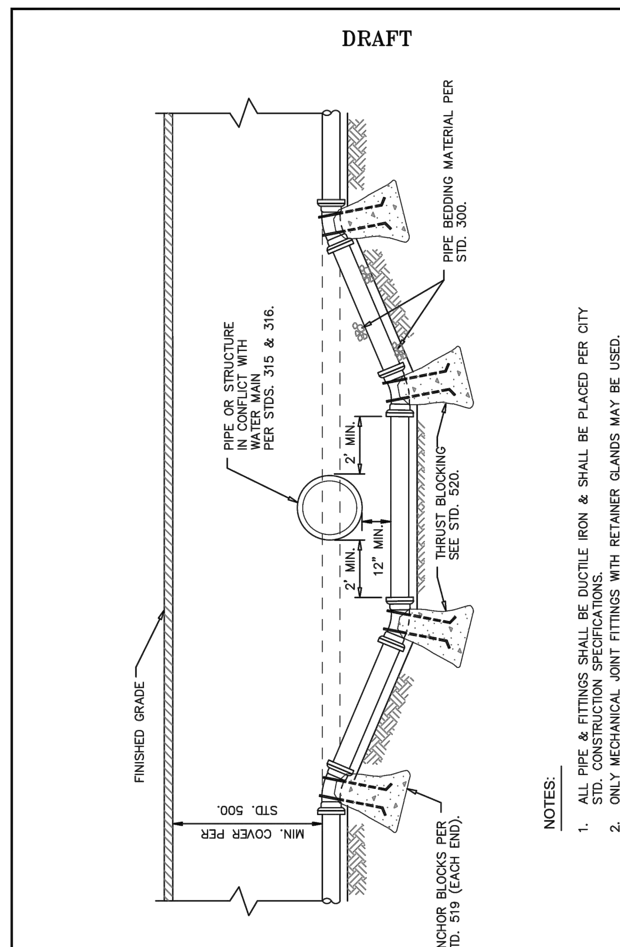

NOTES:

1. ALL PIPE & FITTINGS SHALL BE DUCTILE IRON & SHALL BE PLACED PER CITY STD. CONSTRUCTION SPECIFICATIONS.
2. ONLY MECHANICAL JOINT FITTINGS WITH RETAINER GLANDS MAY BE USED.
3. ALL BENDS SHALL BE 45° OR 22-1/2° FITTINGS.

WATER MAIN LOWERING DETAIL

CITY OF WILLITS — WATER MAIN LOWERING DETAIL — STD. NO. 528
SCALE: NONE | DRAWN: TM | CHK: TM | APPVD: | DATE: OCT 2009

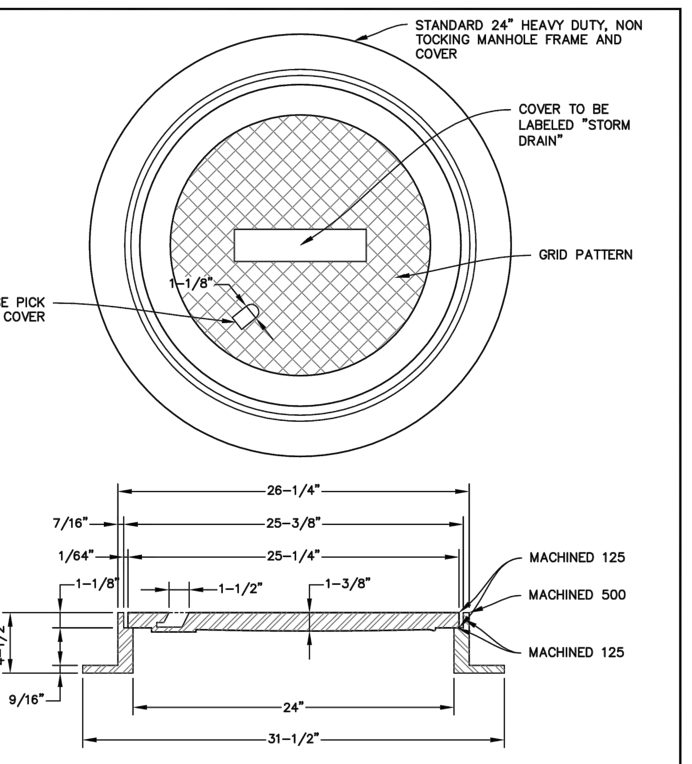

NOTES:

1. ALL CASTINGS SHALL BE DIPPED IN APPROVED ASPHALT PAINT.
2. ALL MATERIAL USED IN MANUFACTURING SHALL CONFORM TO A.S.T.M. DESIGNATION 48–30, OR TO UNITED STATES GOVERNMENT SPECIFICATIONS QQI–652B.
3. MINIMUM WEIGHT COMPONENTS:
   COVER – 130 POUNDS
   FRAME – 135 POUNDS

CITY OF WILLITS — STANDARD MANHOLE FRAME AND COVER — STD. NO. 401
SCALE: NONE | DRAWN: ERJ | CHK: MGK | APPVD: | DATE: OCT 2009

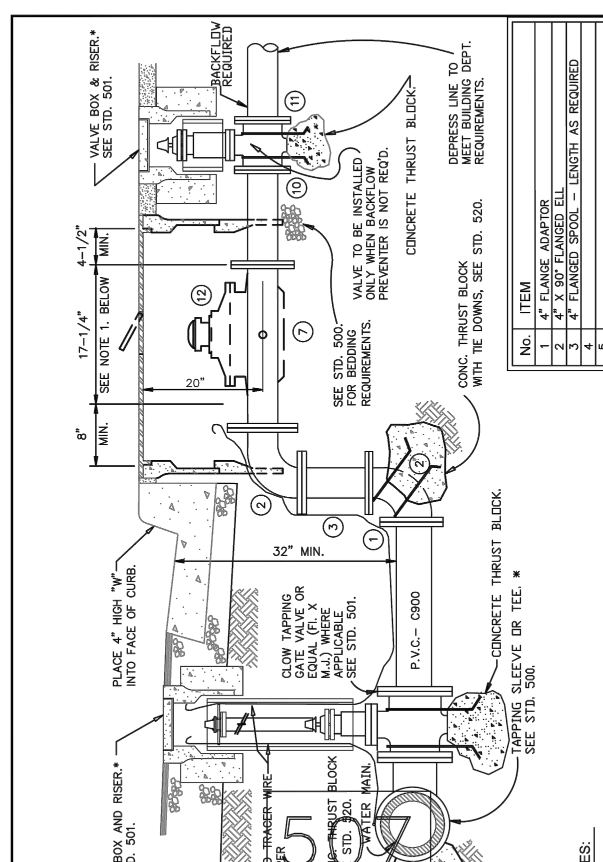

No.	ITEM
1	4" FLANGE ADAPTOR
2	4" X 90° FLANGED ELL
3	4" FLANGED SPOOL – LENGTH AS REQUIRED
4	
5	
6	
7	3" x 17–1/4" SCHL 40 PVC PIPE (SEE NOTE 1)
8	
9	
10	3" P.E. x P.E. PIECE–LENGTH AS REQUIRED
11	3" AWWA RESILIENT WEDGE GATE VALVE (M.J.)
12	3" METER

* – SEE ENGINEER'S APPROVED LIST

NOTES:

1. SPACER SHALL BE SCHL. 40 PVC PIPE WITH 1/2" ø HOLES @ 2" O.C. (VERTICALLY DRILLED THROUGH PIPE). CITY FORCES TO REMOVE SPACER BAR & INSTALL 3" METER.
2. B40 METER BOX MUST BE SET SO THE STEEL COVER IS FLUSH WITH FINISHED SURFACE.
3. SEE STANDARD 500 FOR CONSTRUCTION NOTES.
4. PRIOR TO METER SET, ADDRESS SHALL BE CLEARLY MARKED ON TOP OF METER BOX WITH PERMANENT MARKER.
5. BOX PIPE KNOCKOUTS TO BE GROUTED SUFFICIENTLY TO PREVENT INTRUSION OF DIRT.

CITY OF WILLITS — 4" WATER SERVICE LATERAL INSTALLATION FOR 3" METER — STD. NO. 506
SCALE: NONE | DRAWN: TM | CHK: TM | APPVD: | DATE: OCT 2009

DRAFT

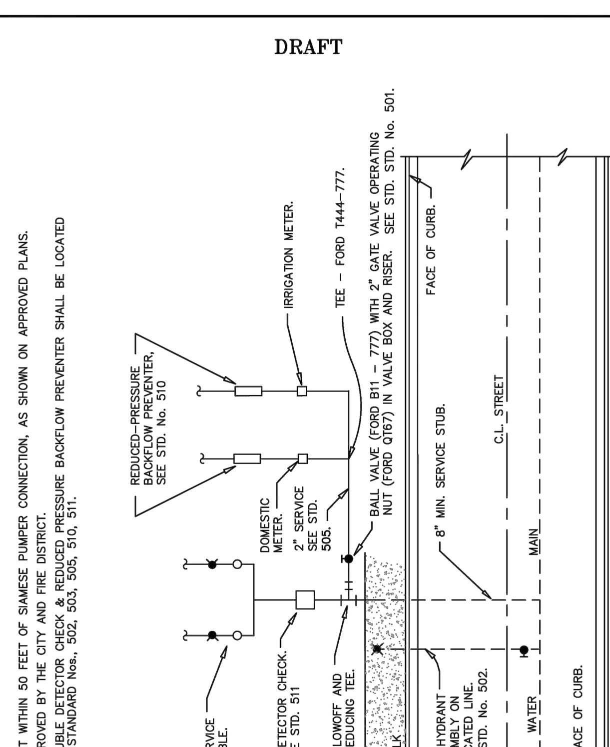

NOTES:

1. INSTALL FIRE HYDRANT WITHIN 50 FEET OF SIAMESE PUMPER CONNECTION, AS SHOWN ON APPROVED PLANS.
2. LOCATION TO BE APPROVED BY THE CITY AND FIRE DISTRICT.
3. HYDRANT, METER, DOUBLE DETECTOR CHECK & REDUCED PRESSURE BACKFLOW PREVENTER SHALL BE LOCATED PER CORRESPONDING STANDARD Nos., 502, 503, 505, 510, 511.

SINGLE COMBINATION WATER SERVICE

CITY OF WILLITS — SINGLE COMBINATION WATER SERVICE — STD. NO. 513
SCALE: NONE | DRAWN: TM | CHK: TM | APPVD: | DATE: OCT 2009

DRAFT

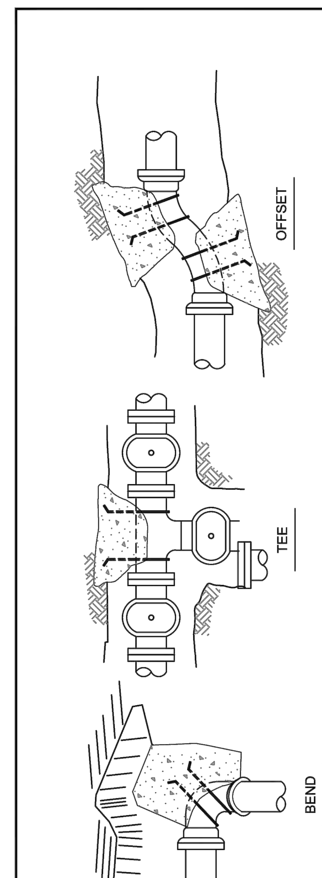

TYPICAL CONC. BLOCKING SHOWN IN PERSPECTIVE

NOTES:

1. SAFE BEARING LOAD OF SOIL FOR HORIZONTAL THRUST SHALL NOT BE EXCEEDED.
2. CONCRETE BLOCKING, CAST–IN–PLACE, TO EXTEND FROM BELLS OF FITTINGS TO UNDISTURBED SOIL AND ENTIRE BEARING AREA MUST BE AGAINST UNDISTURBED SOIL.
3. IN USING THE THRUST BLOCKING TABLE BELOW, ASSUME 2000 P.S.F. BEARING CAPACITY UNLESS OTHERWISE SHOWN ON THE PLANS. THE DESIGN ENGINEER SHALL SPECIFY THRUST BLOCKING REQUIREMENTS FOR ALL OTHER SOIL BEARING CONDITIONS.
4. FOR PLUGGED LEG(S) OF TEE OR CROSS, USE HARNESS TYPE BLOCKING AS SHOWN ON STD. 516 AND CONCRETE BLOCKING INDICATED IN TABLE BELOW.
5. CONCRETE SHALL BE 6 SACK MIX.

MIN. REQ'D BEARING AREA IN SQ. FT. PER 100 P.S.I. TEST PRESSURE *

PIPE SIZE	SOIL BEARING CAPACITY	HARNESS BLOCKS	TEES & DEAD ENDS	90° BENDS	45° BENDS	22-1/2° BENDS
6"	1000	4	4	6	3	2
	2000	2	2	3	2	1
8"	1000	7	7	10	5	3
	2000	4	4	5	3	2
12"	1000	16	16	22	12	6
	2000	8	8	11	6	3

* MULTIPLY NO. IN TABLE BY TEST PRESSURE & DIVIDE BY 100.

CITY OF WILLITS — CONCRETE THRUST BLOCKS — STD. NO. 520
SCALE: NONE | DRAWN: TM | CHK: TM | APPVD: | DATE: OCT 2009

IDENTIFICATION STAMP
DIV. OF THE STATE ARCHITECT
APP: 02-118630 INC:
REVIEWED FOR
SS ☐ FLS ☐ ACS ☑
DATE: 04/13/2021

OFFICE OF THE STATE FIRE MARSHAL
APPROVED FIRE AND PANIC ONLY
Approval of this plan does not authorize or approve any omission or deviation from applicable regulations. Final approval is subject to field inspection. One set of approved plans shall be available on the project site at all times.
PERMIT NO.: 20-N-2332-CP
REVIEWED BY: LITO CATAYLO, OSFM
DATE: 4/1/2021

DGS GENERAL SERVICES
Department of General Services
State of California
Real Estate Services Division
Project Management & Development Branch
707 Third Street, Suite 4-105
West Sacramento, California 95605

NICHOLS MELBURG & ROSSETTO
ARCHITECTS + ENGINEERS
300 Knollcrest Drive
Redding, CA. 96002
(530) 222-3300 (530) 222-3538 FAX
http://www.nmrdesign.com

Copyright © 2020
All ideas, designs, arrangements and plans indicated or represented by this drawing are owned by, and the property of, NICHOLS, MELBURG and ROSSETTO and were created, evolved and developed for use on, and in conjunction with, the specified project. None of such ideas, designs, arrangements or plans shall be used by, or disclosed to any person, firm or corporation for any purpose whatsoever without the written permission of NICHOLS, MELBURG and ROSSETTO.

LICENSE STAMPS
REGISTERED PROFESSIONAL ENGINEER — GREGGORY H. JENNINGS — No. C-68337 — CIVIL — STATE OF CALIFORNIA
3/25/2021

CONSULTANT
BKF
ENGINEERS / SURVEYORS / PLANNERS
200 4TH ST, STE. 300 SANTA ROSA, CA 95401
(707) 583–8500 FAX: (707) 583–8539

DRAWING STATUS
PRELIMINARY PLANS
PROJECT CONSTRUCTION STATUS

ISSUE

No.	Date	Description
1	10/22/2020	INITIAL PLAN REVIEW
3	03/22/2021	AGENCY RESUBMITTAL

If drawing is not 30" x 42" it is a reduced print

PROJECT
RESIDENTIAL CENTER, UKIAH: REPLACEMENT OF EXISTING RESIDENTIAL CENTER
440 EAST HILL ROAD
WILLITS, CALIFORNIA, 95490
MENDOCINO COUNTY
CALIFORNIA CONSERVATION CORPS

Supervisor: RFC | Designed: GHJ | Drawn: BRL

DSA Application No. 02-118630

SHEET TITLE
STANDARD DETAILS

DGS Project Number: 01826 | NMR Project Number: 18-6456
Reference North | Sheet Scale: AS SHOWN
Sheet Number: C6.04

ISSUE DATE
July 9, 2021

Login Name: lake
Plot Date: October 20, 2020 – 10:31 am
File Name: K:\2018\181957_CCC_Willits_Residential_Center\dwg\BLOCKS\CITY DETAILS\CITY DETAILS.dwg
XREFS:

IDENTIFICATION STAMP
DIV. OF THE STATE ARCHITECT
APP: 02-118630 INC:
REVIEWED FOR
SS ☐ FLS ☐ ACS ☑
DATE: 04/13/2021

OFFICE OF THE STATE FIRE MARSHAL
APPROVED FIRE AND PANIC ONLY
Approval of this plan does not authorize or approve any omission or deviation from applicable regulations. Final approval is subject to field inspection. One set of approved plans shall be available on the project site at all times.
PERMIT NO.: 20-N-2332-CP
REVIEWED BY: LITO CATAYLO, OSFM
DATE: 3/ 1 /2021

DGS GENERAL SERVICES
Department of General Services
State of California
Real Estate Services Division
Project Management & Development Branch
707 Third Street, Suite 4-105
West Sacramento, California 95605

NICHOLS MELBURG & ROSSETTO
ARCHITECTS + ENGINEERS
300 Knollcrest Drive
Redding, CA. 96002
(530) 222-3300 (530) 222-3538 FAX
http://www.nmrdesign.com

Copyright © 2021
All ideas, designs, arrangements and plans indicated or represented by this drawing are owned by, and the property of, NICHOLS, MELBURG and ROSSETTO and were created, evolved and developed for use on, and in conjunction with, the specified project. None of such ideas, designs, arrangements or plans shall be used by, or disclosed to any person, firm or corporation for any purpose whatsoever without the written permission of NICHOLS, MELBURG and ROSSETTO.

LICENSE STAMPS

REGISTERED PROFESSIONAL ENGINEER
GREGGORY H. JENNINGS
No. C-68337
CIVIL
STATE OF CALIFORNIA
3/25/2021

CONSULTANT

BKF
200 4th STREET
SUITE 300
SANTA ROSA, CA 95401
(707) 583-8500
www.bkf.com

DRAWING STATUS

CONSTRUCTION DOCUMENTS

ISSUE

No.	Date	Description
1	10/22/2020	INITIAL PLAN REVIEW
2	01/08/2021	AGENCY RESUBMITTAL
3	03/22/2021	AGENCY RESUBMITTAL

If drawing is not 30" x 42" it is a reduced print

PROJECT

RESIDENTIAL CENTER, UKIAH: REPLACEMENT OF EXISTING RESIDENTIAL CENTER
440 EAST HILL ROAD
WILLITS, CALIFORNIA, 95490
MENDOCINO COUNTY
CALIFORNIA CONSERVATION CORPS

Supervisor	Designed	Drawn
RFC	GHJ	BRL

DSA Application No.
02-118630

SHEET TITLE

EROSION & SEDIMENT CONTROL PLAN (NORTH)

DGS Project Number	NMR Project Number
000000000001826	18-6456

Reference North: NORTH

Sheet Scale: AS SHOWN

Sheet Number: C7.01

ISSUE DATE

July 9, 2021

Login Name: tipt
Plot Date: March 19, 2021 – 6:30 pm
File Name: K:\2018\181957_CCC_Willits_Residential_Center\dwg\181957_SITE.dwg
XREFS: X_TOPO | 181957_SGRN | 181957_CORR | x-NRC-site | x-NRC-TOPO | x-NRC-ALTA | Ukiah_WetlandCreation_20200923

KEYNOTES

(57) STABILIZED CONSTRUCTION ENTRANCE/EXIT IN ACCORDANCE WITH CITY OF WILLITS STANDARD 801.

IDENTIFICATION STAMP
DIV. OF THE STATE ARCHITECT
APP: 02-118630 INC:
REVIEWED FOR
SS ☐ FLS ☐ ACS ☑
DATE: 04/13/2021

OFFICE OF THE STATE FIRE MARSHAL
APPROVED FIRE AND PANIC ONLY
Approval of this plan does not authorize or approve any omission or deviation from applicable regulations. Final approval is subject to field inspection. One set of approved plans shall be available on the project site at all times.
PERMIT NO. 2019-2332-CP
REVIEWED BY: LEO CATAYLO, OSFM
DATE: 4 / /2021

DGS GENERAL SERVICES
Department of General Services
State of California
Real Estate Services Division
Project Management & Development Branch
707 Third Street, Suite 4-105
West Sacramento, California 95605

NICHOLS MELBURG & ROSSETTO
ARCHITECTS + ENGINEERS
300 Knollcrest Drive
Redding, CA. 96002
(530) 222-3300 (530) 222-3538 FAX
http://www.nmrdesign.com

Copyright © 2021
All ideas, designs, arrangements and plans indicated or represented by this drawing are owned by, and the property of, NICHOLS, MELBURG and ROSSETTO and were created, evolved and developed for use on, and in conjunction with, the specified project. None of such ideas, designs, arrangements or plans shall be used by, or disclosed to any person, firm or corporation for any purpose whatsoever without the written permission of NICHOLS, MELBURG and ROSSETTO.

LICENSE STAMPS

REGISTERED PROFESSIONAL ENGINEER
GREGGORY H. JENNINGS
No. C-68337
CIVIL
STATE OF CALIFORNIA
3/25/2021

CONSULTANT

BKF
200 4th STREET
SUITE 300
SANTA ROSA, CA 95401
(707) 583-8500
www.bkf.com

DRAWING STATUS
CONSTRUCTION DOCUMENTS

ISSUE

No.	Date	Description
1	10/22/2020	INITIAL PLAN REVIEW
2	01/08/2021	AGENCY RESUBMITTAL
3	03/22/2021	AGENCY RESUBMITTAL

If drawing is not 30" x 42" it is a reduced print

PROJECT
RESIDENTIAL CENTER, UKIAH: REPLACEMENT OF EXISTING RESIDENTIAL CENTER
440 EAST HILL ROAD
WILLITS, CALIFORNIA, 95490
MENDOCINO COUNTY
CALIFORNIA CONSERVATION CORPS

Supervisor	Designed	Drawn
RFC	GHJ	BRL

DSA Application No.
02-118630

SHEET TITLE
EROSION & SEDIMENT CONTROL PLAN (SOUTH)

DGS Project Number 000000000001826
NMR Project Number 18-6456
Reference North
Sheet Scale AS SHOWN
Sheet Number C7.02

ISSUE DATE
July 9, 2021

Login Name: lgt
Plot Date: March 19, 2021 - 6:29 pm
File Name: K:\2018\18157_CCC_Willits_Residential_Center\dwg\18157_SITE.dwg
XREFS: X_CPO | 18157_SDMH | 18157_SDMH | x-WRG-Site | x-WRG-TOPO | x-WRG-ALTA | Ukiah_WetlandCreation_20200923

PLANT SCHEDULE					
CODE	QTY	SIZE	BOTANICAL NAME	COMMON NAME	REMARKS
AG	36	1 gal	Abelia x grandiflora `Prostrata`	Prostrate Glossy Abelia	
AM	7	5 gal	Acer macrophyllum	Big Leaf Maple	see 6/L1
AR	8	15 gal	Acer rubrum `October Glory`	October Glory Red Maple	double stake
AU	5	15 gal	Arbutus unedo	Strawberry Tree	standard, double stake
AE	230	1 gal	Arctostaphylos `Emerald Carpet`	Manzanita	
AJ	67	5 gal	Arctostaphylos `John Dourley`	Manzanita	
CV	21	5 gal	Callistemon viminalis 'Little John'	Dwarf Bottlebrush	
CD	8	15 gal	Calocedrus decurrens	Incense Cedar	
CT	85	4" pot	Carex tumulicola	Foothill Sedge	
CO	18	15 gal	Cercis occidentalis	Western Redbud	
CP	69	1 gal	Cistus pulverulentus `Sunset`	Sunset Rockrose	
CB	13	5 gal	Cornus sericea `Baileyi`	Red Twig Dogwood	
DC	158	1 gal	Deschampsia cespitosa	Tufted Hairgrass	
DI	28	1 gal	Dietes iridioides	Fortnight Lily	
FL	18	5 gal	Fraxinus latifolia	Oregon Ash	see 6/L1
FT	7	5 gal	Fruit tree and planter		see 7/L1 and list below
HA	25	5 gal	Heteromeles arbutifolia	Toyon	
JP	50	1 gal	Juncus patens	California Gray Rush	
JC	61	5 gal	Juniperus chinensis `Armstrongii`	Armstrong Juniper	
LN	8	15 gal	Lagerstroemia `Natchez`	Crape Myrtle	
LC	51	1 gal	Lavandula `Goodwin Creek Gray`	Goodwin Creek Gray Lavender	
MC	50	1 gal	Mahonia aquifolium `Compacta`	Compact Oregon Grape	
ND	12	5 gal	Nandina domestica `Gulfstream`	Heavenly Bamboo	
QK	9	15 gal	Quercus kelloggii	California Black Oak	double stake
QL	28	15 gal	Quercus lobata	Valley Oak	double stake, 6/L1 where noted
QW	6	15 gal	Quercus wislizenii	Interior Live Oak	double stake
RC	64	1 gal	Rhamnus californica	California Coffee Berry	
RI	44	5 gal	Rhaphiolepis indica `Ballerina`	Ballerina Indian Hawthorn	
RU	49	5 gal	Rhaphiolepis umbellata `RutRhaph1`	Southern Moon Yedda Hawthorn	
RS	15	1 gal	Ribes sanguineum	Red Flowering Currant	
RF	8	5 gal	Rosa x `Noare`	Flower Carpet Red Groundcover Rose	
RO	21	1 gal	Rosmarinus officinalis `Huntington Carpet`	Rosemary	
SH	24	1 gal	Salvia microphylla `Hot Lips`	Hot Lips Sage	
SM	36	1 gal	Salvia microphylla `San Carlos Festival`	Sage	
SJ	53	1 gal	Spiraea japonica `Neon Flash`	Neon Flash Spirea	
VO	70	1 gal	Vaccinium ovatum	Evergreen Huckleberry	
VT	15	5 gal	Viburnum tinus `Spring Bouquet`	Spring Bouquet Laurestinus	
ZM	5	15 gal	Zelkova serrata `Musashino`	Sawleaf Zelkova	double stake

	QTY		TOP DRESSING
	38,560 sf		Bark (Fir, Redwood, or Cedar Walk on Bark) - 3" deep over pre-emergent herbicide
	7,800 sf		Cobble (4"-8" clean smooth river rock) - 6" deep over filter fabric (4 oz/yd), see 2/L1
	29,690 sf		Gravel (3/4" crushed clean stone) - 3" deep over filter fabric (4 oz/yd), see 2/L1
	66,050 sf	seed	Meadow Grass (grass and flower mix) - hydroseed, see specifications
	17,060 sf	sod	Turf (90/10 mix of Turf Type Tall Fescue and Kentucky Bluegrass)
	18,930 sf		Trail (decomposed granite with stabilizer) - 2" deep over 4" of aggregate base, see 3/L1
	980 lf		Mow strip (concrete, 6" wide) - see 4/L1
	48 lf		Mow strip (concrete, 12" wide) - see 4/L1
	360 sf		Jute netting (as specified)

Quantities are for Contractor convenience only. Verify with Drawings and in field.

See Sheet L10 for Mitigation Wetland Plant Schedule.

Fruit trees - Contractor may substitute different varieties with written approval. Pollination compatibility required.

Apple: 'Fuji' and 'Golden Delicious'
Pear: 'Bartlett' and 'Anjou'
Peach: 'O'Henry' and 'Redhaven'
Plum: 'Sugar'

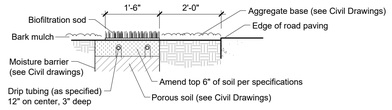

5 L1 Vegetated Swale Sod
Not to Scale

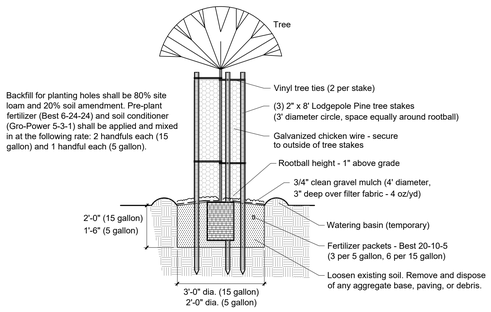

6 L1 Protected Tree Detail
Not to Scale

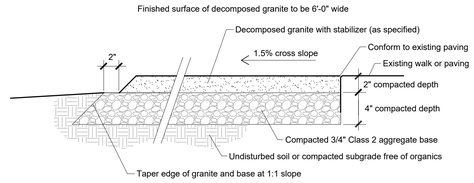

3 L1 Decomposed Granite Section
Not to Scale

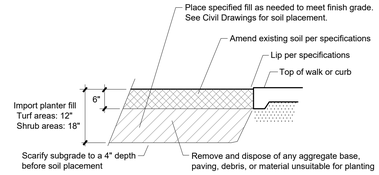

1 L1 Typical Planter Section
Not to Scale

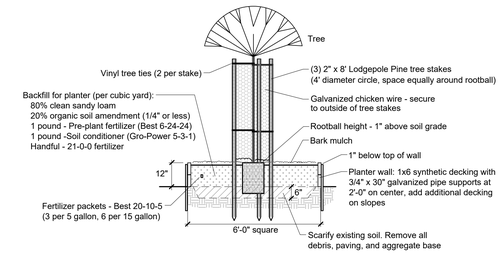

7 L1 Fruit Tree and Planter
Not to Scale

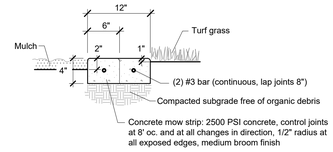

4 L1 Concrete Mow Strip
Not to Scale

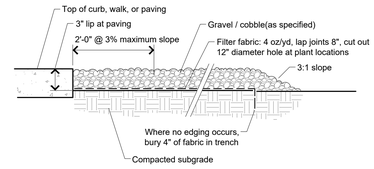

2 L1 Typical Gravel / Cobble Section
Not to Scale

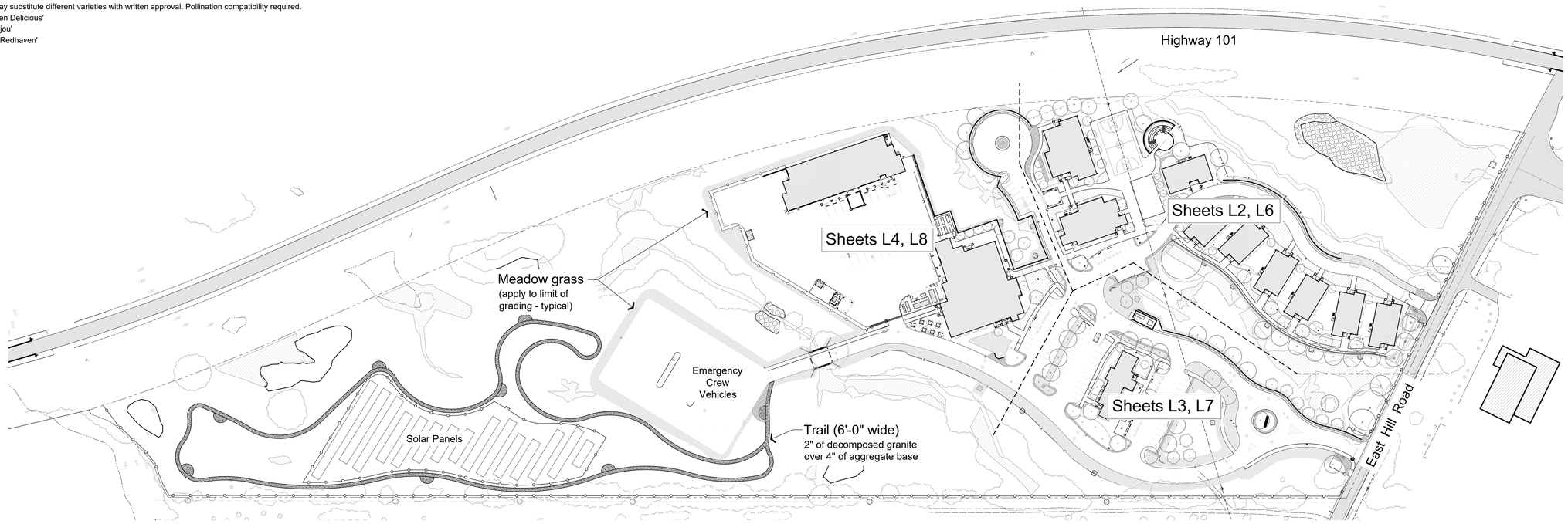

Landscape Plan
1" = 80'

Landscape Sheet Schedule

L1 Plant Schedule / Project Plan
L2 Planting Plan (Campus Core)
L3 Planting Plan (Entry / Administration)
L4 Planting Plan (Maintenance Area)
L5 Irrigation Schedule / Irrigation Details
L6 Irrigation Plan (Campus Core)
L7 Irrigation Plan (Entry / Administration)
L8 Irrigation Plan (Maintenance Area)
L9 Irrigation Details
L10 Mitigation Wetland Planting Plan

IDENTIFICATION STAMP
DIV. OF THE STATE ARCHITECT
APP: 02-118630 INC:
REVIEWED FOR
SS ☐ FLS ☐ ACS ☑
DATE: 04/13/2021

OFFICE OF THE STATE FIRE MARSHAL
APPROVED FIRE AND PANIC ONLY
Approval of this plan does not authorize or approve any omission or deviation from applicable regulations. Final approval is subject to field inspection. One set of approved plans shall be available on the project site at all times.
PERMIT NO: 20 N 2332-CP
REVIEWED BY: LEO CATALLO, OSFM
DATE: 3 / /2021

DGS GENERAL SERVICES
Department of General Services
State of California
Real Estate Services Division
Project Management & Development Branch
707 Third Street, Suite 4-105
West Sacramento, California 95605

NICHOLS MELBURG & ROSSETTO
ARCHITECTS + ENGINEERS
300 Knollcrest Drive
Redding, CA. 96002
(530) 222-3300 (530) 222-3538 FAX
http://www.nmrdesign.com

Copyright © 2021
All ideas, designs, arrangements and plans indicated or represented by this drawing are owned by, and the property of, NICHOLS, MELBURG and ROSSETTO and were created, evolved and developed for use on, and in conjunction with, the specified project. None of such ideas, designs, arrangements or plans shall be used by, or disclosed to any person, firm or corporation for any purpose whatsoever without the written permission of NICHOLS, MELBURG and ROSSETTO.

LICENSE STAMPS
REGISTERED LANDSCAPE ARCHITECT MICHAEL J. LANDER 2399 Exp: 12/31/21 STATE OF CALIFORNIA

CONSULTANT
Michael Lander ASLA
Landscape Architecture
RLA 2399
20270 Lupine Drive Redding, California 96002
(530) 223-2488 mlander@shasta.com

DRAWING STATUS
CONSTRUCTION DOCUMENTS

ISSUE

No.	Date	Description
1	10/20/2020	INITIAL PLAN REVIEW
2	01/22/2021	AGENCY RESUBMITTAL
3	03/22/2021	AGENCY RESUBMITTAL

If drawing is not 30" x 42" it is a reduced print

PROJECT
RESIDENTIAL CENTER, UKIAH: REPLACEMENT OF EXISTING RESIDENTIAL CENTER
440 EAST HILL ROAD
WILLITS, CALIFORNIA, 95490
MENDOCINO COUNTY
CALIFORNIA CONSERVATION CORPS

Supervisor	Designed	Drawn
	ML	ML

DSA Application No.
02-118630

SHEET TITLE
PLANT SCHEDULE

DGS Project Number
000000000001826
NMR Project Number
18-6456

Reference North
Sheet Scale
1" = 80'
Sheet Number
L1

ISSUE DATE
July 9, 2021

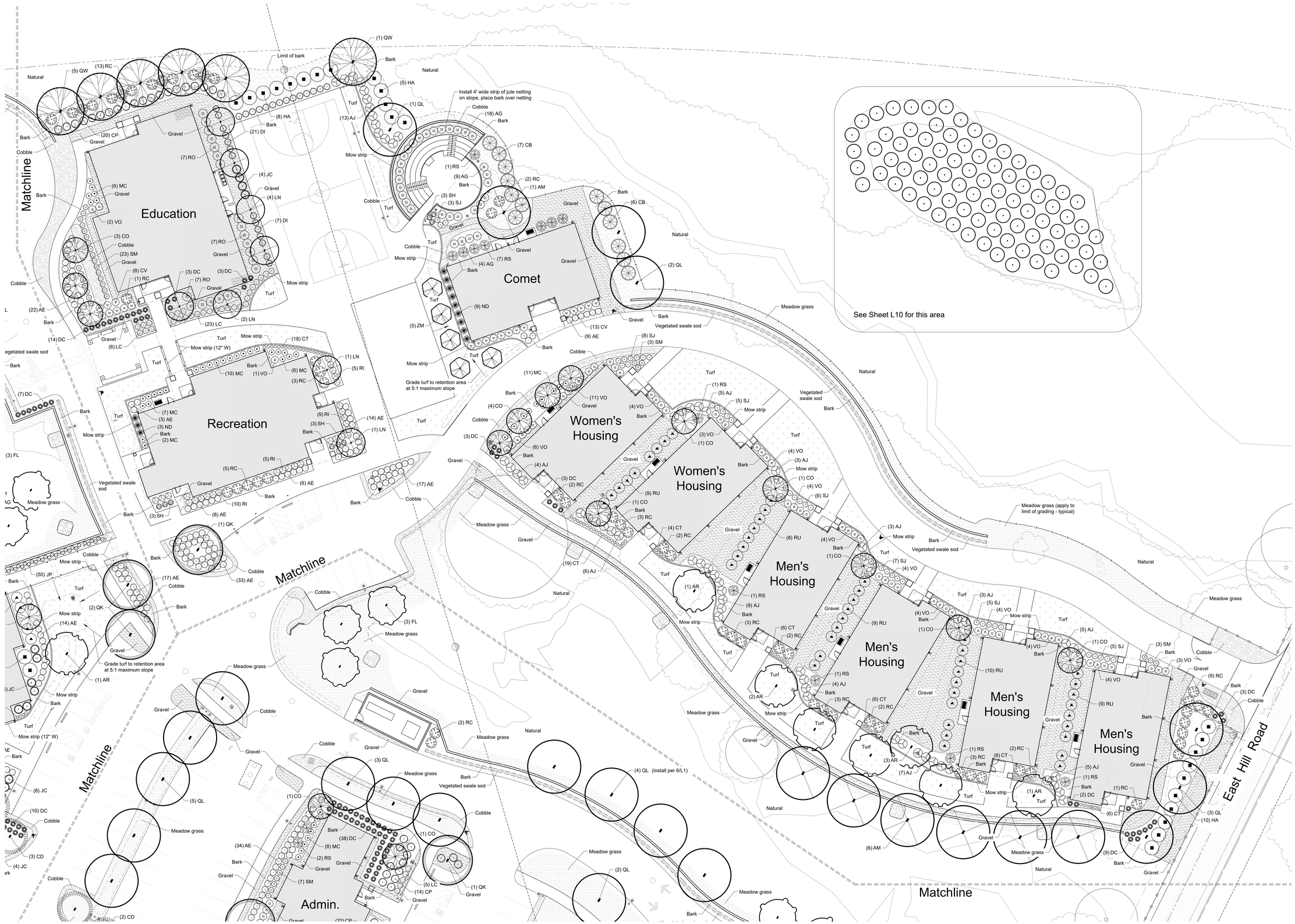

Planting Plan

1" = 20'

IDENTIFICATION STAMP
DIV. OF THE STATE ARCHITECT
APP: 02-118630 INC:
REVIEWED FOR
SS ☐ FLS ☐ ACS ☑
DATE: 04/13/2021

OFFICE OF THE STATE FIRE MARSHAL
APPROVED FIRE AND PANIC ONLY
Approval of this plan does not authorize or approve any omission or deviation from applicable regulations. Final approval is subject to field inspection. One set of approved plans shall be available on the project site at all times.
PERMIT NO: 28 N 2332-CP
REVIEWED BY: LEO CATAYLO, OSFM
DATE: 3 / /2021

GENERAL SERVICES
Department of General Services
State of California
Real Estate Services Division
Project Management & Development Branch
707 Third Street, Suite 4-105
West Sacramento, California 95605

NICHOLS MELBURG & ROSSETTO
ARCHITECTS + ENGINEERS
300 Knollcrest Drive
Redding, CA 96002
(530) 222-3300 (530) 222-3538 FAX
http://www.nmrdesign.com

Copyright © 2021
All ideas, designs, arrangements and plans indicated or represented by this drawing are owned by, and the property of, NICHOLS, MELBURG and ROSSETTO and were created, evolved and developed for use on, and in conjunction with, the specified project. None of such ideas, designs, arrangements or plans shall be used by, or disclosed to any person, firm or corporation for any purpose whatsoever without the written permission of NICHOLS, MELBURG and ROSSETTO.

LICENSE STAMPS

REGISTERED LANDSCAPE ARCHITECT
MICHAEL J. LANDER
2399
Exp: 12/31/21
STATE OF CALIFORNIA

CONSULTANT

Michael Lander ASLA
Landscape Architecture
RLA 2399
20270 Lupine Drive Redding, California 96002
(530) 223-2488 mlander@shasta.com

DRAWING STATUS

CONSTRUCTION DOCUMENTS

ISSUE

No.	Date	Description
1	10/22/2020	INITIAL PLAN REVIEW
2	01/08/2021	AGENCY RESUBMITTAL

If drawing is not 30" x 42" it is a reduced print

PROJECT

RESIDENTIAL CENTER, UKIAH: REPLACEMENT OF EXISTING RESIDENTIAL CENTER

440 EAST HILL ROAD
WILLITS, CALIFORNIA, 95490
MENDOCINO COUNTY
CALIFORNIA CONSERVATION CORPS

Supervisor	Designed	Drawn
	ML	ML

DSA Application No.
02-118630

SHEET TITLE

PLANTING PLAN

DGS Project Number: 000000000001826
NMR Project Number: 18-6456
Reference North: NORTH
Sheet Scale: 1" = 20'
Sheet Number: L2

ISSUE DATE
July 9, 2021

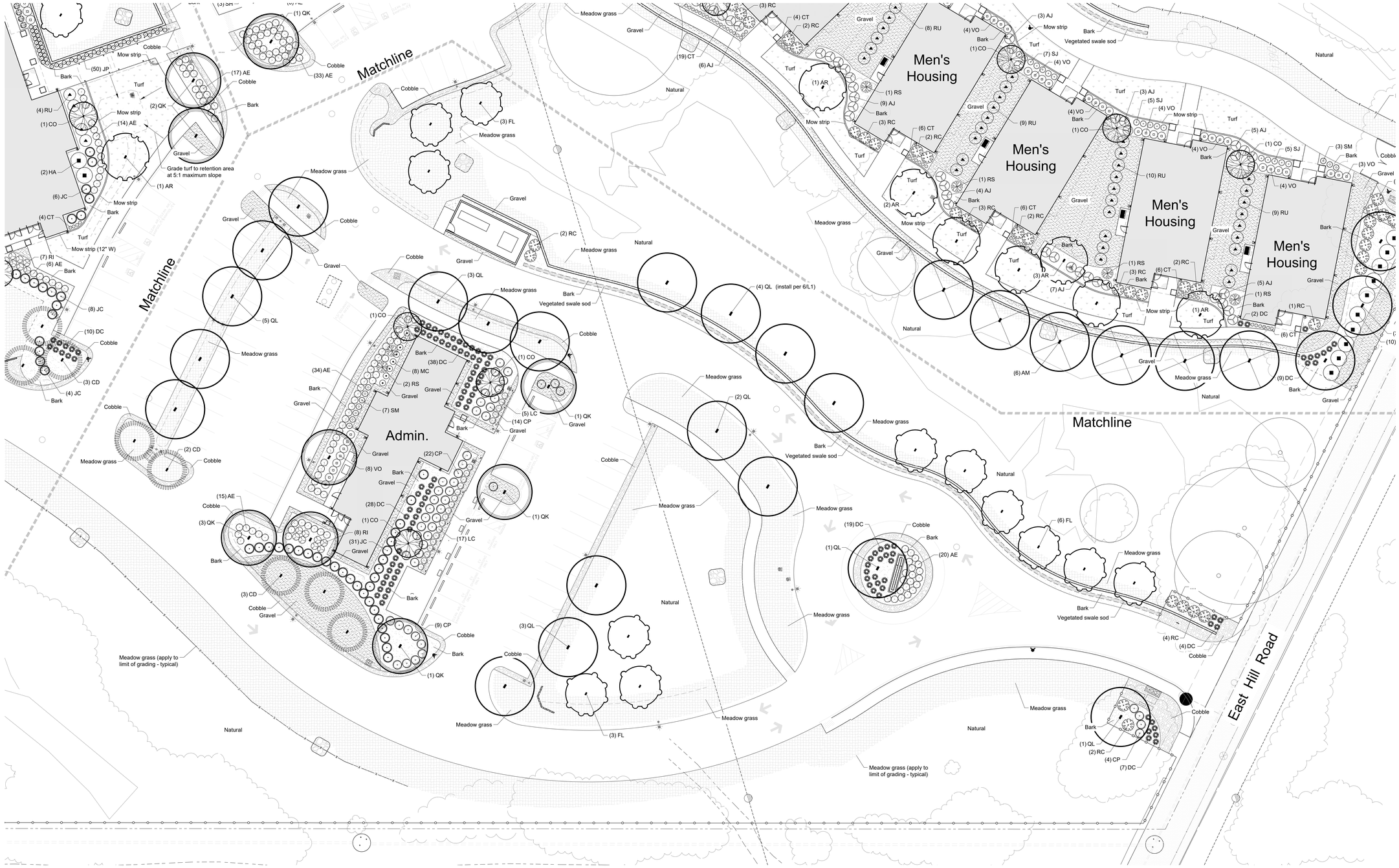

Planting Plan

1" = 20'

IDENTIFICATION STAMP
DIV. OF THE STATE ARCHITECT
APP: 02-118630 INC:
REVIEWED FOR
SS ☐ FLS ☐ ACS ☑
DATE: 04/13/2021

OFFICE OF THE STATE FIRE MARSHAL
APPROVED FIRE AND PANIC ONLY
Approval of this plan does not authorize or approve any omission or deviation from applicable regulations. Final approval is subject to field inspection. One set of approved plans shall be available on the project site at all times.
PERMIT NO: 28 N 2333 CP
REVIEWED BY: LEO CATALLO, OSFM
DATE: 4/ /2021

DGS GENERAL SERVICES
Department of General Services
State of California
Real Estate Services Division
Project Management & Development Branch
707 Third Street, Suite 4-105
West Sacramento, California 95605

NICHOLS MELBURG & ROSSETTO
ARCHITECTS + ENGINEERS
300 Knollcrest Drive
Redding, CA. 96002
(530) 222-3300 (530) 222-3538 FAX
http://www.nmrdesign.com

Copyright © 2021
All ideas, designs, arrangements and plans indicated or represented by this drawing are owned by, and the property of, NICHOLS, MELBURG and ROSSETTO and were created, evolved and developed for use on, and in conjunction with, the specified project. None of such ideas, designs, arrangements or plans shall be used by, or disclosed to any person, firm or corporation for any purpose whatsoever without the written permission of NICHOLS, MELBURG and ROSSETTO.

LICENSE STAMPS

REGISTERED LANDSCAPE ARCHITECT
MICHAEL J. LANDER
2399
Exp: 12/31/21
STATE OF CALIFORNIA

CONSULTANT

Michael Lander ASLA
Landscape Architecture
RLA 2399
20270 Lupine Drive Redding, California 96002
(530) 223-2488 mlander@shasta.com

DRAWING STATUS

CONSTRUCTION DOCUMENTS

ISSUE

No.	Date	Description
1	10/22/2020	INITIAL PLAN REVIEW
2	01/08/2021	AGENCY RESUBMITTAL

If drawing is not 30" x 42" it is a reduced print

PROJECT

RESIDENTIAL CENTER, UKIAH: REPLACEMENT OF EXISTING RESIDENTIAL CENTER

440 EAST HILL ROAD
WILLITS, CALIFORNIA, 95490
MENDOCINO COUNTY
CALIFORNIA CONSERVATION CORPS

Supervisor	Designed	Drawn
	ML	ML

DSA Application No.
02-118630

SHEET TITLE

PLANTING PLAN

DGS Project Number: 0000000000001826
NMR Project Number: 18-6456
Reference North
Sheet Scale: 1" = 20'
Sheet Number: L3

ISSUE DATE

July 9, 2021

Planting Plan

1" = 20'

IDENTIFICATION STAMP
DIV. OF THE STATE ARCHITECT
APP: 02-118630 INC:
REVIEWED FOR
SS ☐ FLS ☐ ACS ☑
DATE: 04/13/2021

OFFICE OF THE STATE FIRE MARSHAL
APPROVED FIRE AND PANIC ONLY
Approval of this plan does not authorize or approve any omission or deviation from applicable regulations. Final approval is subject to field inspection. One set of approved plans shall be available on the project site at all times.
PERMIT NO: 20 N 2332-CP
REVIEWED BY: LEO CATAYLO, OSFM
DATE: 4/ /2021

DGS
GENERAL SERVICES
Department of General Services
State of California
Real Estate Services Division
Project Management & Development Branch
707 Third Street, Suite 4-105
West Sacramento, California 95605

NICHOLS MELBURG & ROSSETTO
ARCHITECTS + ENGINEERS
300 Knollcrest Drive
Redding, CA. 96002
(530) 222-3300 (530) 222-3538 FAX
http://www.nmrdesign.com

Copyright © 2021
All ideas, designs, arrangements and plans indicated or represented by this drawing are owned by, and the property of, NICHOLS, MELBURG and ROSSETTO and were created, evolved and developed for use on, and in connection with the specified project. None of such ideas, designs, arrangements or plans shall be used by, or disclosed to any person, firm or corporation for any purpose whatsoever without the written permission of NICHOLS, MELBURG and ROSSETTO.

LICENSE STAMPS

REGISTERED LANDSCAPE ARCHITECT
MICHAEL J. LANDER
No. 2399
Exp: 12/31/21
STATE OF CALIFORNIA

CONSULTANT

Michael Lander ASLA
Landscape Architecture
RLA 2399
20270 Lupine Drive Redding, California 96002
(530) 223-2488 mlander@shasta.com

DRAWING STATUS

CONSTRUCTION DOCUMENTS

ISSUE

No.	Date	Description
1	10/22/2020	INITIAL PLAN REVIEW
2	01/08/2021	AGENCY RESUBMITTAL

If drawing is not 30" x 42" it is a reduced print

PROJECT

RESIDENTIAL CENTER, UKIAH: REPLACEMENT OF EXISTING RESIDENTIAL CENTER

440 EAST HILL ROAD
WILLITS, CALIFORNIA, 95490
MENDOCINO COUNTY
CALIFORNIA CONSERVATION CORPS

Supervisor	Designed	Drawn
	ML	ML

DSA Application No.
02-118630

SHEET TITLE

PLANTING PLAN

DGS Project Number
000000000001826

NMR Project Number
18-6456

Reference North

Sheet Scale
1" = 20'

Sheet Number
L4

ISSUE DATE

July 9, 2021

Irrigation Schedule

Symbol	Description	Make/Model	Remarks
W	2" Water meter (irrigation sub meter)		see Civil Drawings
	2" Reduced pressure assembly w/ steel enclosure		see Civil Drawings
	Ball valve - SCH 80 PVC, 150 PSI, w/ true unions	NDS (KBI), Nibco, Spears, or approved equal	see 1/L9
M	1-1/2" Electric valve (Master Valve) with 2-wire decoder	Rainbird 150-PESB valve, FD-101TURF decoder	see 2/L9
F	1-1/2" Flow sensor with 2-wire sensor decoder	Rainbird FS150P, SD-210TURF decoder	see 3/L9
	Valve assembly - SCH 40 ball valve, electric valve	Rainbird PEB valve	see 4/L9 , valve size on plan
	Drip valve assembly - SCH 40 ball valve, 1" electric valve, 1" pressure regulating basket filter (200 mesh, 40 psi outlet)	Rainbird 100-PEB valve, Rainbird PRB-100 filter	see 4/L9, pressure regulation not required if outlet pressure is less than 50 PSI
	2-wire decoders for electric valves	Rainbird FD-TURF (capacity as required)	install per Rainbird instructions and requirements
	Line surge protector	Rainbird LSP-1	see 5/L9 , install per Rainbird instructions and requirements, install every 500' of wire run or every 8 decoders (whichever is less) and at controller
	1" Quick coupler valve with swivel key	Rainbird 44-RC	see 6/L9 , provide three each: Rainbird 44-K key and SH-1 swivel
	3/4" Yard hydrant (frost proof, 1" galvanized stand pipe)	Simmons 800SB Yard Hydrant (Lead Free) or equal	see 7/L9
	Rotor sprinkler - 4" pop-up, 35' radius, part circle	Rainbird 5004+PCSAMR-MPR-35	see 8/L9 , install correct nozzle for arc
▲	Rotor sprinkler - 4" pop-up, 30' radius, part circle	Rainbird 5004+PCSAMR-MPR-30	see 8/L9 , install correct nozzle for arc
△	Rotor sprinkler - 4" pop-up, 25' radius, part circle	Rainbird 5004+PCSAMR-MPR-25	see 8/L9 , install correct nozzle for arc
●	Rotary Sprinkler - 4" pop-up, adjustable arc, 17'-24' radius	Rainbird R-VAN1724 nozzle, RD04-SP45-F body	see 9/L9
○	Rotary Sprinkler - 4" pop-up, adjustable arc, 18' radius	Rainbird R-VAN18 nozzle, RD04-SP45-F body	see 9/L9
	Rotary Sprinkler - 4" pop-up, full circle, 18' radius	Rainbird R-VAN18-360 nozzle, RD04-SP45-F body	see 9/L9
	Rotary Sprinkler - 4" pop-up, adjustable arc, 14' radius	Rainbird R-VAN14 nozzle, RD04-SP45-F body	see 9/L9
	Rotary Sprinkler - 4" pop-up, full circle, 14' radius	Rainbird R-VAN14-360 nozzle, RD04-SP45-F body	see 9/L9
★	Bubbler and mesh watering tube - .5 GPM, check valve	Rainbird RWS-M-B-C-1402 or equal	see 14/L9, install two (2) per tree
	In-line drip tubing with pressure compensating emitters, copper chip, and check valves (.6gph @ 12"oc.)	Rainbird XFS-CV-06-12	see 11/L9 and 12/L9, subsurface installation, 18" on center or as shown, provide supplemental watering as required for establishment
	5/8" Drip tubing and pressure compensating emitters	Rainbird XBS polyethylene tubing and XB-5PC emitters	mitigation wetland area, see 2/L10
	Drip System Operation Indicator (8" height, .5" MPT)	DIG "DSPI-08"	install per manufacturer's instructions, 1 per circuit
	Flush cap		see 13/L9 , install at ends of tubing
	PVC to drip tubing adapter		see 10/L9
	Mainline - Schedule 40 PVC Pipe		2" if not sized on plan
	Lateral - Schedule 40 PVC Pipe		.75" if not sized on plan
	4" Sleeve - Schedule 40 PVC Pipe		see 1/L5 , install two (2) sleeves at each location, verify locations in field
	2 wire irrigation control cable (14 AWG) SCH 40 PVC conduit	Paige Electric 7072D labeled for Rainbird Maxi / 2 wire	Splice only at decoders, surge protectors, or as shown on Drawings. Install cable in PVC conduit. Size as required. Install cable in star configuration from controller.
C	Irrigation decoder controller with stainless steel cabinet, flow sensing module, and WiFi communication cartridge	Rainbird ESP-LXD 50 station controller and LXMMSS cabinet, Flow Smart Module, IQ-EXTANT-WF antenna, IQ-NCC-WF WiFi Network Communication Cartridge	see 2/L5. Wall mount. Ground controller per Rainbird instructions. Assist Owner with programming, IQ software setup, and troubleshooting. Verify WiFi connection.

Irrigation system is designed for a maximum flow rate of 35 GPM and a static pressure of 80 PSI.
If flow or pressure differ by more than 10%, contact Landscape Architect.

Drawing is diagrammatic. Install all irrigation components in landscape areas except where crossing paved areas in sleeves.

Approximate quantity of subsurface dripline: 18,000 LF

Valve Schedule

Station	Program	GPM	Valve size	Application rate (inches/hour)	Sprinkler type
1	A	21	1"	.6	rotary
2	A	29	1.5"	.6	rotary
3	A	35	1.5"	.6	rotary
4	A	35	1.5"	.6	rotary
5	A	21	1"	.6	rotary
6	A	22	1"	.6	rotary
7	A	10	1"	.7	dripline
8	B	10	1"	.7	dripline
9	B	6	1"	.7	dripline
10	B	6	1"	.7	dripline
11	B	3	1"	.7	dripline
12	B	9	1"	.7	dripline
13	B	7	1"	.7	dripline
14	C	11	1"	.7	dripline
15	C	8	1"	.7	dripline
16	C	5	1"	.7	dripline
17	C	9	1"	.7	dripline
18	C	11	1"	.7	dripline
19	C	12	1"	.7	dripline
20	C	10	1"	.7	dripline
21	C	16	1"	.7	dripline
22	C	6	1"	.7	dripline
23	C	5	1"	.7	dripline
24	A	-	1"	-	dripline
25	A	9	1"	.6	dripline
26	A	8	1"	.6	dripline
27	A	6	1"	.6	dripline
28	D	6	1"	8.0	bubbler
29	D	13	1"	8.0	bubbler
30	D	8	1"	8.0	bubbler
31	D	10	1"	8.0	bubbler
32	D	9	1"	8.0	bubbler
33	C	1.5	1"	.5	emitters
34	B	7	1"	8.0	bubbler

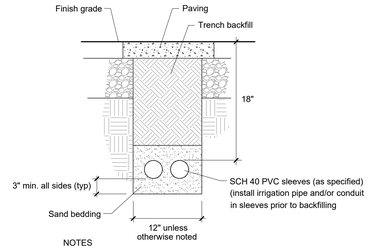

NOTES

1. Sides of trench shall be dug square and clean of all sharp material.
2. Trench backfill beneath pavement shall be Class 2 aggregate base . Compact to 95% relative density.
3. After pipe, conduit, or cable installation, seal ends with expanding foam.

1 / L5 Sleeves
Not to Scale

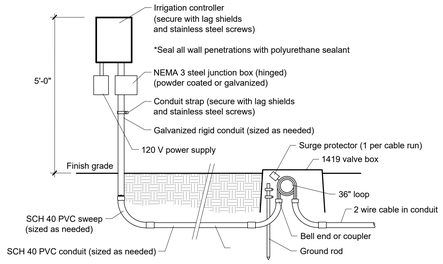

2 / L5 Irrigation Controller
Not to Scale

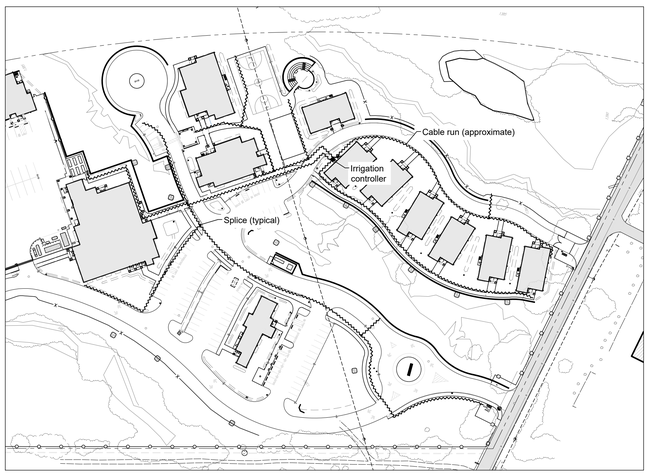

Irrigation Cable Runs
1" = 100'

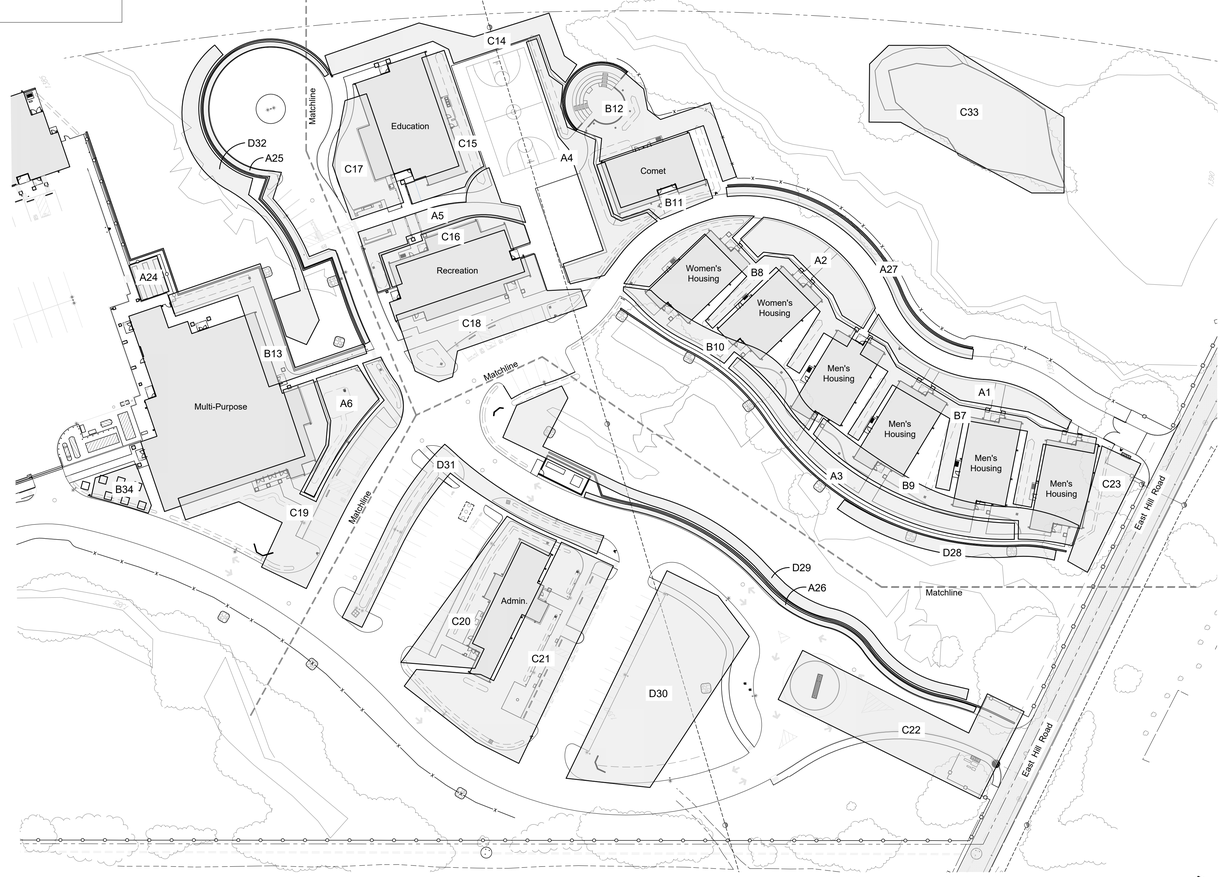

Irrigation Zones
1" = 50'

IDENTIFICATION STAMP
DIV. OF THE STATE ARCHITECT
APP: 02-118630 INC:
REVIEWED FOR
SS ☐ FLS ☐ ACS ☑
DATE: 04/13/2021

OFFICE OF THE STATE FIRE MARSHAL
APPROVED FIRE AND PANIC ONLY
Approval of this plan does not authorize or approve any omission or deviation from applicable regulations. Final approval is subject to field inspection. One set of approved plans shall be available on the project site at all times.
PERMIT NO. 20-N-2332-CP
REVIEWED BY LEO CATAYLO, OSFM
DATE: 4 / /2021

DGS GENERAL SERVICES
Department of General Services
State of California
Real Estate Services Division
Project Management & Development Branch
707 Third Street, Suite 4-105
West Sacramento, California 95605

NICHOLS MELBURG & ROSSETTO ARCHITECTS + ENGINEERS
300 Knollcrest Drive
Redding, CA 96002
(530) 222-3300 (530) 222-3538 FAX
http://www.nmrdesign.com

Copyright © 2021
All ideas, designs, arrangements and plans indicated or represented by this drawing are owned by, and the property of, NICHOLS, MELBURG and ROSSETTO and were created, evolved and developed for use on, and in conjunction with, the specified project. None of such ideas, designs, arrangements or plans shall be used by, or disclosed to any person, firm or corporation for any purpose whatsoever without the written permission of NICHOLS, MELBURG and ROSSETTO.

LICENSE STAMPS

REGISTERED LANDSCAPE ARCHITECT MICHAEL J. LANDER 2399 Exp. 12/31/21 STATE OF CALIFORNIA

CONSULTANT

Michael Lander ASLA
Landscape Architecture
RLA 2399
20270 Lupine Drive Redding, California 96002
(530) 223-2488 mlander@shasta.com

DRAWING STATUS

CONSTRUCTION DOCUMENTS

ISSUE

No.	Date	Description
1	10/22/2020	INITIAL PLAN REVIEW
2	01/08/2021	AGENCY RESUBMITTAL

If drawing is not 30" x 42" it is a reduced print

PROJECT

RESIDENTIAL CENTER, UKIAH: REPLACEMENT OF EXISTING RESIDENTIAL CENTER

440 EAST HILL ROAD
WILLITS, CALIFORNIA, 95490
MENDOCINO COUNTY
CALIFORNIA CONSERVATION CORPS

Supervisor	Designed	Drawn
	ML	ML

DSA Application No.
02-118630

SHEET TITLE

IRRIGATION SCHEDULE

DGS Project Number
000000000001826

NMR Project Number
18-6456

Reference North
NORTH

Sheet Scale
As shown

Sheet Number
L5

ISSUE DATE
July 9, 2021

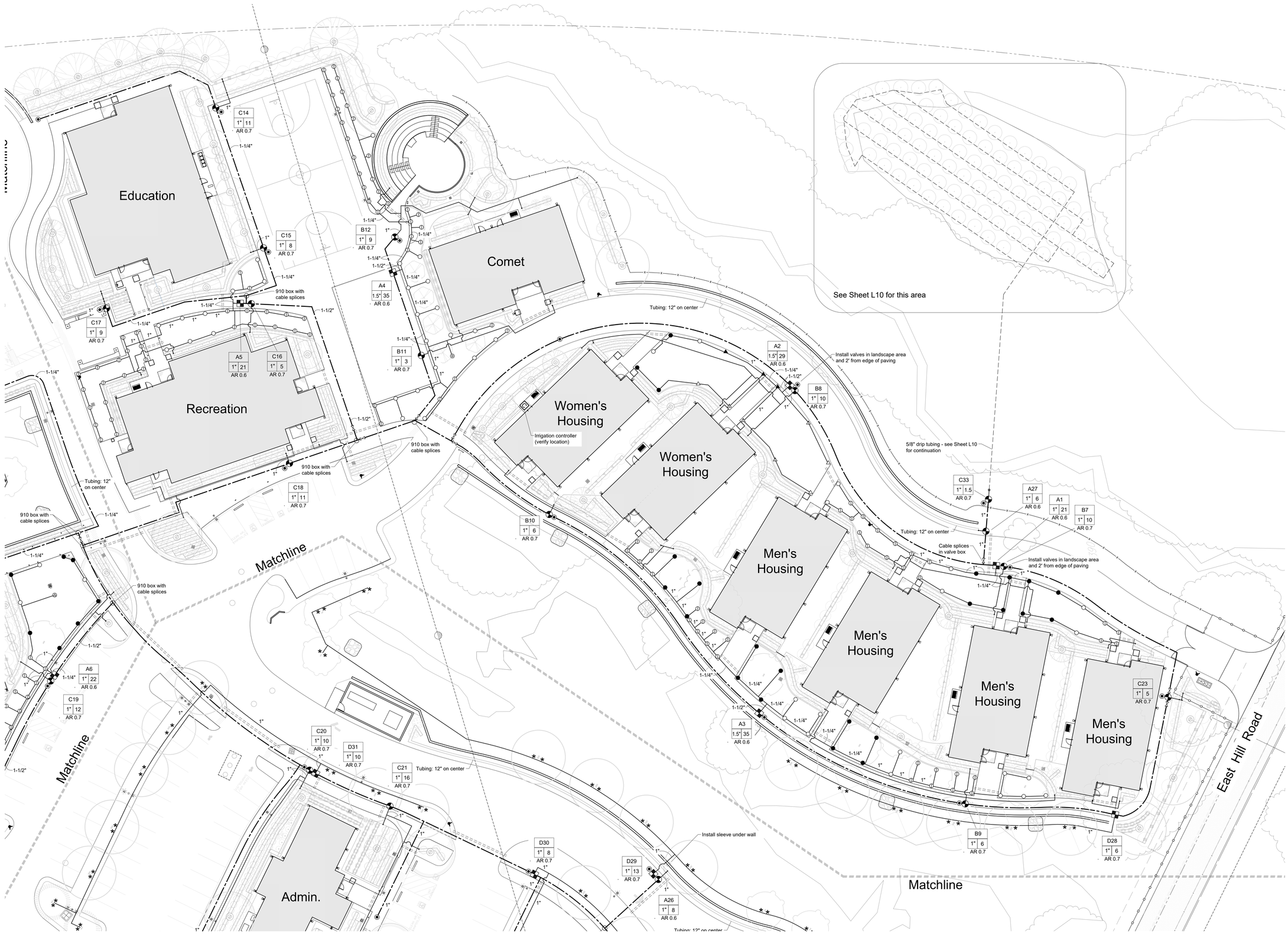

Irrigation Plan

1" = 20'

IDENTIFICATION STAMP
DIV. OF THE STATE ARCHITECT
APP: 02-118630 INC:
REVIEWED FOR
SS ☐ FLS ☐ ACS ☑
DATE: 04/13/2021

OFFICE OF THE STATE FIRE MARSHAL
APPROVED FIRE AND PANIC ONLY
Approval of this plan does not authorize or approve any omission or deviation from applicable regulations. Final approval is subject to field inspection. One set of approved plans shall be available on the project site at all times.
PERMIT NO. 20-N-2332-CP
REVIEWED BY LEO CATAYLO, OSFM
DATE: 4 / /2021

GENERAL SERVICES
Department of General Services
State of California
Real Estate Services Division
Project Management & Development Branch
707 Third Street, Suite 4-105
West Sacramento, California 95605

NICHOLS MELBURG & ROSSETTO
ARCHITECTS + ENGINEERS
300 Knollcrest Drive
Redding, CA. 96002
(530) 222-3300 (530) 222-3538 FAX
http://www.nmrdesign.com

Copyright © 2021
All ideas, designs, arrangements and plans indicated or represented by this drawing are owned by, and the property of, NICHOLS, MELBURG and ROSSETTO and were created, evolved and developed for use on, and in conjunction with, the specified project. None of such ideas, designs, arrangements or plans shall be used by, or disclosed to any person, firm or corporation for any purpose whatsoever without the written permission of NICHOLS, MELBURG and ROSSETTO.

LICENSE STAMPS

REGISTERED LANDSCAPE ARCHITECT
MICHAEL J. LANDER
2399
Exp: 12/31/21
STATE OF CALIFORNIA

CONSULTANT

Michael Lander ASLA
Landscape Architecture
RLA 2399
20270 Lupine Drive Redding, California 96002
(530) 223-2488 mlander@shasta.com

DRAWING STATUS

CONSTRUCTION DOCUMENTS

ISSUE

No.	Date	Description
1	10/22/2020	INITIAL PLAN REVIEW
2	01/08/2021	AGENCY RESUBMITTAL

If drawing is not 30" x 42" it is a reduced print

PROJECT

RESIDENTIAL CENTER, UKIAH: REPLACEMENT OF EXISTING RESIDENTIAL CENTER

440 EAST HILL ROAD
WILLITS, CALIFORNIA, 95490
MENDOCINO COUNTY
CALIFORNIA CONSERVATION CORPS

Supervisor	Designed	Drawn
	ML	ML

DSA Application No.
02-118630

SHEET TITLE

IRRIGATION PLAN

DGS Project Number: 000000000001826
NMR Project Number: 18-6456

Reference North: NORTH
Sheet Scale: 1" = 20'
Sheet Number: L6

ISSUE DATE

July 9, 2021

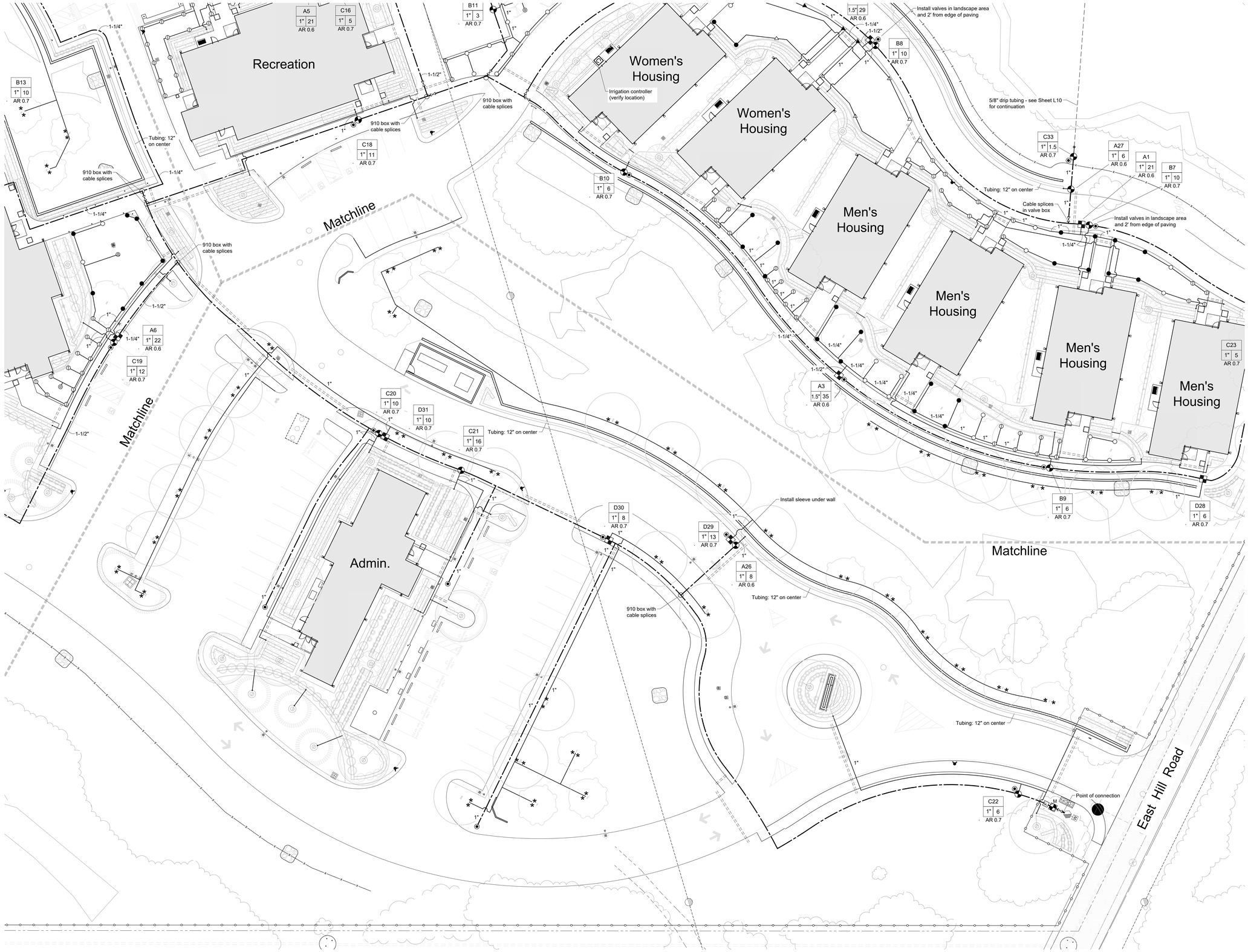

Irrigation Plan

1" = 20'

IDENTIFICATION STAMP
DIV. OF THE STATE ARCHITECT
APP: 02-118630 INC:
REVIEWED FOR
SS ☐ FLS ☐ ACS ☑
DATE: 04/13/2021

OFFICE OF THE STATE FIRE MARSHAL
APPROVED FIRE AND PANIC ONLY
Approval of this plan does not authorize or approve any omission or deviation from applicable regulations. Final approval is subject to field inspection. One set of approved plans shall be available on the project site at all times.
PERMIT NO. 28-N-2332-CP
REVIEWED BY LEO CATAYLO, OSFM
DATE: 4 / /2021

DGS GENERAL SERVICES
Department of General Services
State of California
Real Estate Services Division
Project Management & Development Branch
707 Third Street, Suite 4-105
West Sacramento, California 95605

NICHOLS MELBURG & ROSSETTO
ARCHITECTS + ENGINEERS
300 Knollcrest Drive
Redding, CA. 96002
(530) 222-3300 (530) 222-3538 FAX
http://www.nmrdesign.com

Copyright © 2021
All ideas, designs, arrangements and plans indicated or represented by this drawing are owned by, and the property of, NICHOLS, MELBURG and ROSSETTO and were created, evolved and developed for use on, and in connection with, the specified project. None of such ideas, designs, arrangements or plans shall be used by, or disclosed to any person, firm or corporation for any purpose whatsoever without the written permission of NICHOLS, MELBURG and ROSSETTO.

LICENSE STAMPS

REGISTERED LANDSCAPE ARCHITECT
MICHAEL J. LANDER
2399
Exp: 12/31/21
STATE OF CALIFORNIA

CONSULTANT

Michael Lander ASLA
Landscape Architecture
RLA 2399
20270 Lupine Drive Redding, California 96002
(530) 223-2488 mlander@shasta.com

DRAWING STATUS

CONSTRUCTION DOCUMENTS

ISSUE

No.	Date	Description
1	10/22/2020	INITIAL PLAN REVIEW
2	01/08/2021	AGENCY RESUBMITTAL

If drawing is not 30" x 42" it is a reduced print

PROJECT

RESIDENTIAL CENTER, UKIAH: REPLACEMENT OF EXISTING RESIDENTIAL CENTER

440 EAST HILL ROAD
WILLITS, CALIFORNIA, 95490
MENDOCINO COUNTY
CALIFORNIA CONSERVATION CORPS

Supervisor	Designed	Drawn
	ML	ML

DSA Application No.
02-118630

SHEET TITLE

IRRIGATION PLAN

DGS Project Number
000000000001826

NMR Project Number
18-6456

Reference North
NORTH

Sheet Scale
1" = 20'

Sheet Number
L7

ISSUE DATE

July 9, 2021

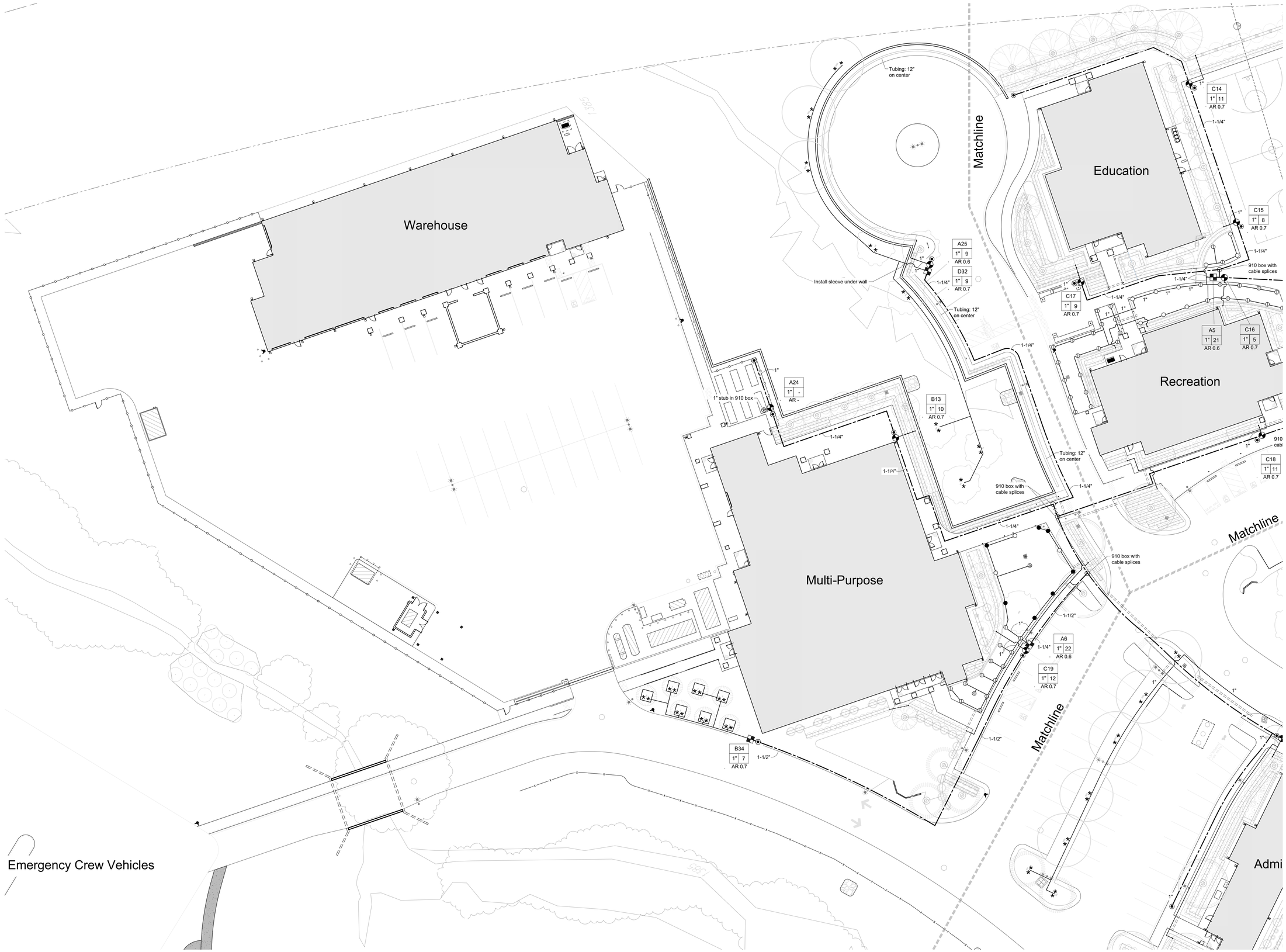

Irrigation Plan

1" = 20'

IDENTIFICATION STAMP
DIV. OF THE STATE ARCHITECT
APP: 02-118630 INC:
REVIEWED FOR
SS ☐ FLS ☐ ACS ☑
DATE: 04/13/2021

OFFICE OF THE STATE FIRE MARSHAL
APPROVED FIRE AND PANIC ONLY
Approval of this plan does not authorize or approve any omission or deviation from applicable regulations. Final approval is subject to field inspection. One set of approved plans shall be available on the project site at all times.
PERMIT NO.: 28-N-2332-CP
REVIEWED BY: LEO CATAYLO, OSFM
DATE: 4/ /2021

DGS GENERAL SERVICES
Department of General Services
State of California
Real Estate Services Division
Project Management & Development Branch
707 Third Street, Suite 4-105
West Sacramento, California 95605

NICHOLS MELBURG & ROSSETTO
ARCHITECTS + ENGINEERS
300 Knollcrest Drive
Redding, CA 96002
(530) 222-3300 (530) 222-3538 FAX
http://www.nmrdesign.com

Copyright © 2021
All ideas, designs, arrangements and plans indicated or represented by this drawing are owned by, and the property of, NICHOLS, MELBURG and ROSSETTO and were created, evolved and developed for use on, and in conjunction with, the specified project. None of such ideas, designs, arrangements or plans shall be used by, or disclosed to any person, firm or corporation for any purpose whatsoever without the written permission of NICHOLS, MELBURG and ROSSETTO.

LICENSE STAMPS

REGISTERED LANDSCAPE ARCHITECT MICHAEL J. LANDER 2399 Exp: 12/31/21 STATE OF CALIFORNIA

CONSULTANT

Michael Lander ASLA
Landscape Architecture
RLA 2399
20270 Lupine Drive Redding, California 96002
(530) 223-2488 mlander@shasta.com

DRAWING STATUS

CONSTRUCTION DOCUMENTS

ISSUE

No.	Date	Description
1	10/22/2020	INITIAL PLAN REVIEW
2	01/08/2021	AGENCY RESUBMITTAL

If drawing is not 30" x 42" it is a reduced print

PROJECT

RESIDENTIAL CENTER, UKIAH: REPLACEMENT OF EXISTING RESIDENTIAL CENTER

440 EAST HILL ROAD
WILLITS, CALIFORNIA, 95490
MENDOCINO COUNTY
CALIFORNIA CONSERVATION CORPS

Supervisor	Designed	Drawn
	ML	ML

DSA Application No.
02-118630

SHEET TITLE

IRRIGATION PLAN

DGS Project Number	NMR Project Number
000000000001826	18-6456

Reference North: NORTH

Sheet Scale: 1" = 20'

Sheet Number: L8

ISSUE DATE

July 9, 2021

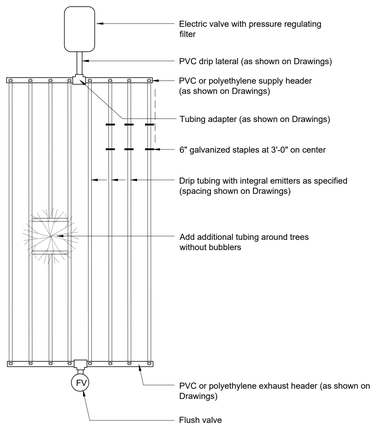

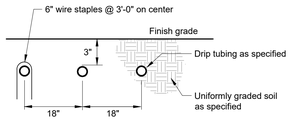

11 L9 **Dripline Layout**
Not to Scale

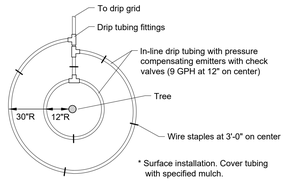

12 L9 **Drip Ring at Trees**
Not to Scale

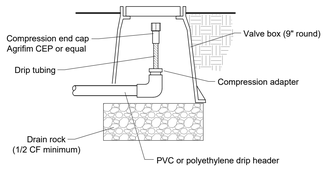

13 L9 **Dripline Flush**
Not to Scale

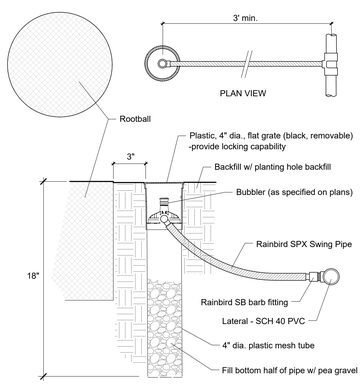

Note: Install two tubes per tree on opposite sides.

14 L9 **Bubbler and Mesh Tube**
Not to Scale

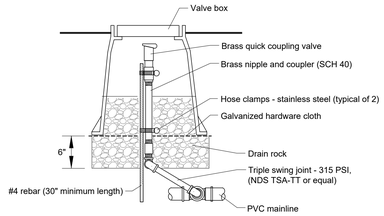

6 L9 **Quick Coupler Valve**
Not to Scale

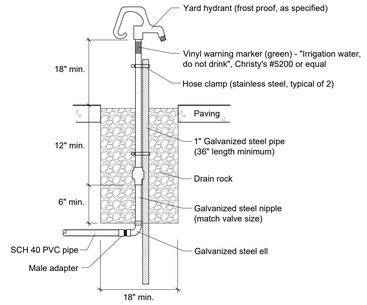

7 L9 **Yard Hydrant**
Not to Scale

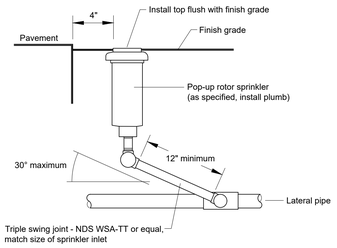

8 L9 **Pop-up Rotor Sprinkler**
Not to Scale

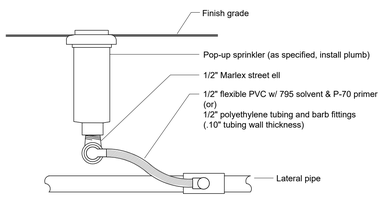

9 L9 **Pop-up Rotary Sprinkler**
Not to Scale

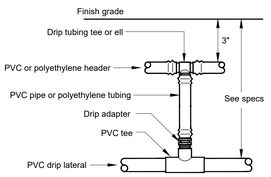

10 L9 **Dripline Connection**
Not to Scale

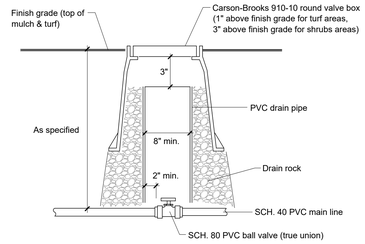

1 L9 **Ball Valve**
Not to Scale

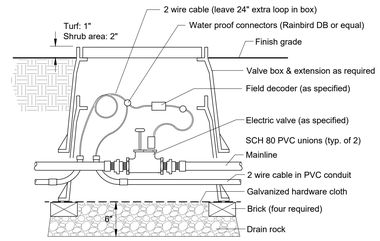

2 L9 **Master Valve**
Not to Scale

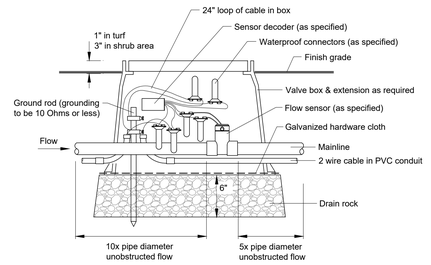

3 L9 **Flow Sensor**
Not to Scale

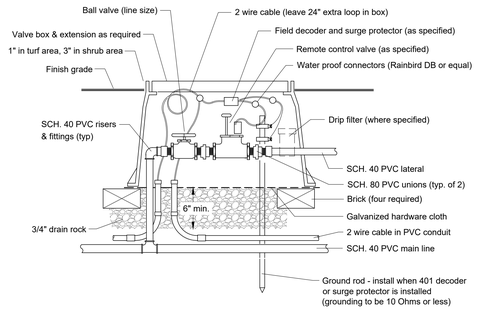

4 L9 **Valve Assembly**
Not to Scale

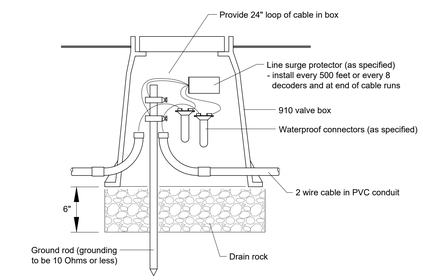

5 L9 **Surge Protector**
Not to Scale

IDENTIFICATION STAMP
DIV. OF THE STATE ARCHITECT
APP: 02-118630 INC:
REVIEWED FOR
SS ☐ FLS ☐ ACS ☑
DATE: 04/13/2021

OFFICE OF THE STATE FIRE MARSHAL
APPROVED FIRE AND PANIC ONLY
Approval of this plan does not authorize or approve any omission or deviation from applicable regulations. Final approval is subject to field inspection. One set of approved plans shall be available on the project site at all times.
PERMIT NO: 28 N 2332 CP
REVIEWED BY: LEO CATAYLO, OSFM
DATE: 4 / /2021

DGS GENERAL SERVICES
Department of General Services
State of California
Real Estate Services Division
Project Management & Development Branch
707 Third Street, Suite 4-105
West Sacramento, California 95605

NICHOLS MELBURG & ROSSETTO
ARCHITECTS + ENGINEERS
300 Knollcrest Drive
Redding, CA 96002
(530) 222-3300 (530) 222-3538 FAX
http://www.nmrdesign.com

Copyright © 2021
All ideas, designs, arrangements and plans indicated or represented by this drawing are owned by, and the property of, NICHOLS, MELBURG and ROSSETTO and were created, evolved and developed for use on, and in conjunction with, the specified project. None of such ideas, designs, arrangements or plans shall be used by, or disclosed to any person, firm or corporation for any purpose whatsoever without the written permission of NICHOLS, MELBURG and ROSSETTO.

LICENSE STAMPS

REGISTERED LANDSCAPE ARCHITECT
MICHAEL J. LANDER
2399
Exp: 12/31/21
STATE OF CALIFORNIA

CONSULTANT

Michael Lander ASLA
Landscape Architecture
RLA 2399
20270 Lupine Drive Redding, California 96002
(530) 223-2488 mlander@shasta.com

DRAWING STATUS
CONSTRUCTION DOCUMENTS

ISSUE

No.	Date	Description
1	10/22/2020	INITIAL PLAN REVIEW
2	01/08/2021	AGENCY RESUBMITTAL

If drawing is not 30" x 42" it is a reduced print

PROJECT
RESIDENTIAL CENTER, UKIAH: REPLACEMENT OF EXISTING RESIDENTIAL CENTER
440 EAST HILL ROAD
WILLITS, CALIFORNIA, 95490
MENDOCINO COUNTY
CALIFORNIA CONSERVATION CORPS

Supervisor	Designed	Drawn
	ML	ML

DSA Application No.
02-118630

SHEET TITLE
IRRIGATION DETAILS

DGS Project Number
000000000001826
NMR Project Number
18-6456

Reference North
NORTH
Sheet Scale
Sheet Number
L9

ISSUE DATE
July 9, 2021

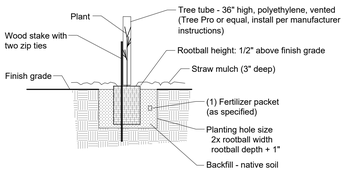

1 / L10 Typical Planting Detail

Not to Scale

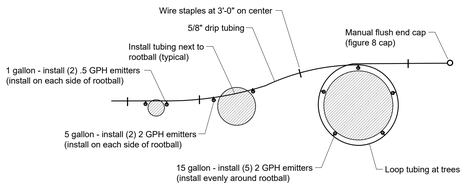

2 / L10 Typical Plug-in Drip Tubing

Not to Scale

PLANT SCHEDULE - MITIGATION WETLANDS & RIPARIAN PLANTING					
RIPARIAN PLANTING					
CODE	QTY	SIZE	BOTANICAL NAME	COMMON NAME	REMARKS
C	20	1 gal / treeband	Cornus sericea	Red Twig Dogwood	see 1/L10
F	24	1 gal / treepot	Fraxinus latifolia	Oregon Ash	see 1/L10
Q	16	1 gal / treepot	Quercus lobata	Valley Oak	see 1/L10
R	22	1 gal / treeband	Rosa californica	California Wild Rose	see 1/L10
S	18	stake	Salix lasiolepis	Arroyo Willow	see Note 1
	100 total				
MITIGATION WETLANDS - HERBACEOUS PLANT MIX - Quantity: 22,936 square feet					
	QTY	SIZE	BOTANICAL NAME	COMMON NAME	REMARKS
	2,294	plugs	Carex densa	Dense Sedge	1 plug per 10 square feet
	2,294	plugs	Deschampsia caespitosa	Tufted Hair Grass	1 plug per 10 square feet
	2,294	plugs	Juncus effusus	Soft Rush	1 plug per 10 square feet
MITIGATION WETLANDS - HERBACEOUS SEED MIX - Quantity: 22,936 square feet					
	QTY	SIZE	BOTANICAL NAME	COMMON NAME	REMARKS
	4.22# PLS	seed	Danthonia californica	California Oatgrass	8 pounds pure live seed / acre
	2.64# PLS	seed	Elymus glaucus	Blue Wild Rye	5 pounds pure live seed / acre
	0.26# PLS	seed	Limnanthes douglasii ssp. douglasii	Common Meadowfoam	.5 pounds pure live seed / acre

NOTES:
1. See Landscape Specifications for Willow stake specifications and planting.
2. See Landscape Specifications for additional planting requirements.
3. Equally distribute plug plantings in wetland mitigation areas.
4. See Landscape Specifications for Herbaceous Seed Mix seeding.
5. Irrigate Herbaceous Plantings and Riparian Planting Areas 1 and 2 manually as required by weather conditions. See Landscape Specifications for additional requirements.
6. See Landscape Specifications and Mitigation and Monitoring Plan for wetland maintenance and monitoring requirements.

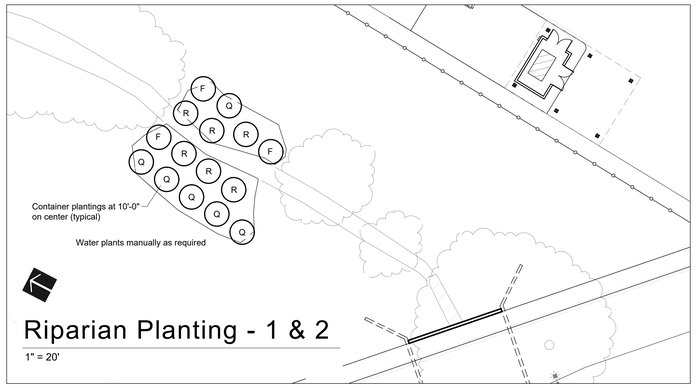

Riparian Planting - 1 & 2

1" = 20'

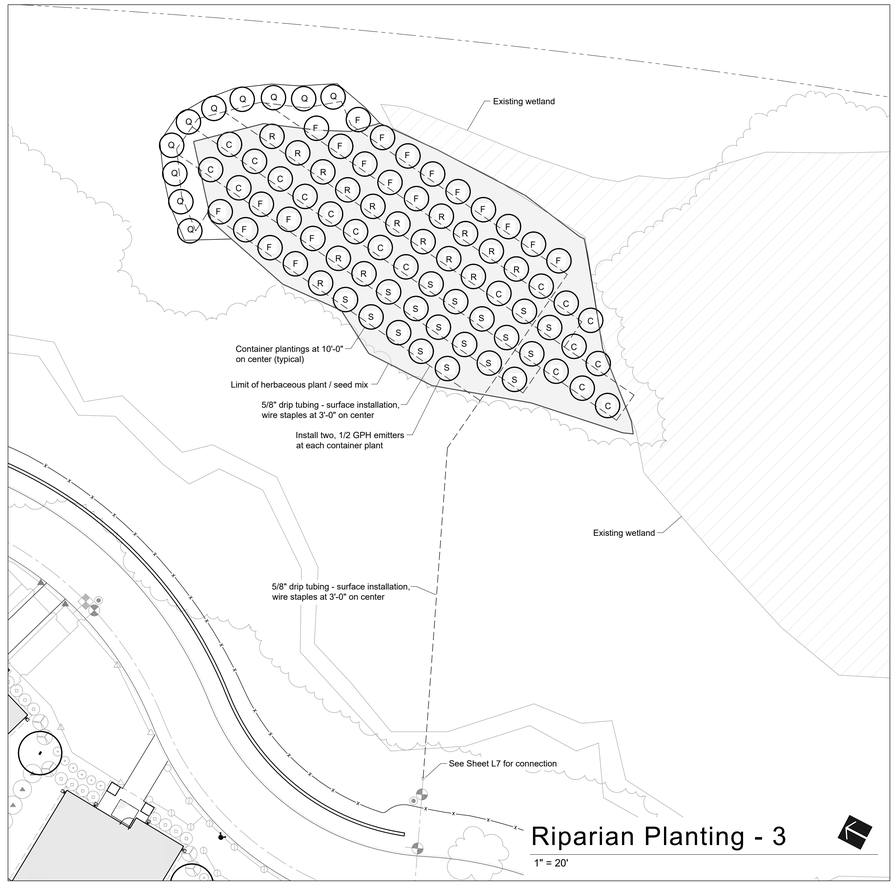

Riparian Planting - 3

1" = 20'

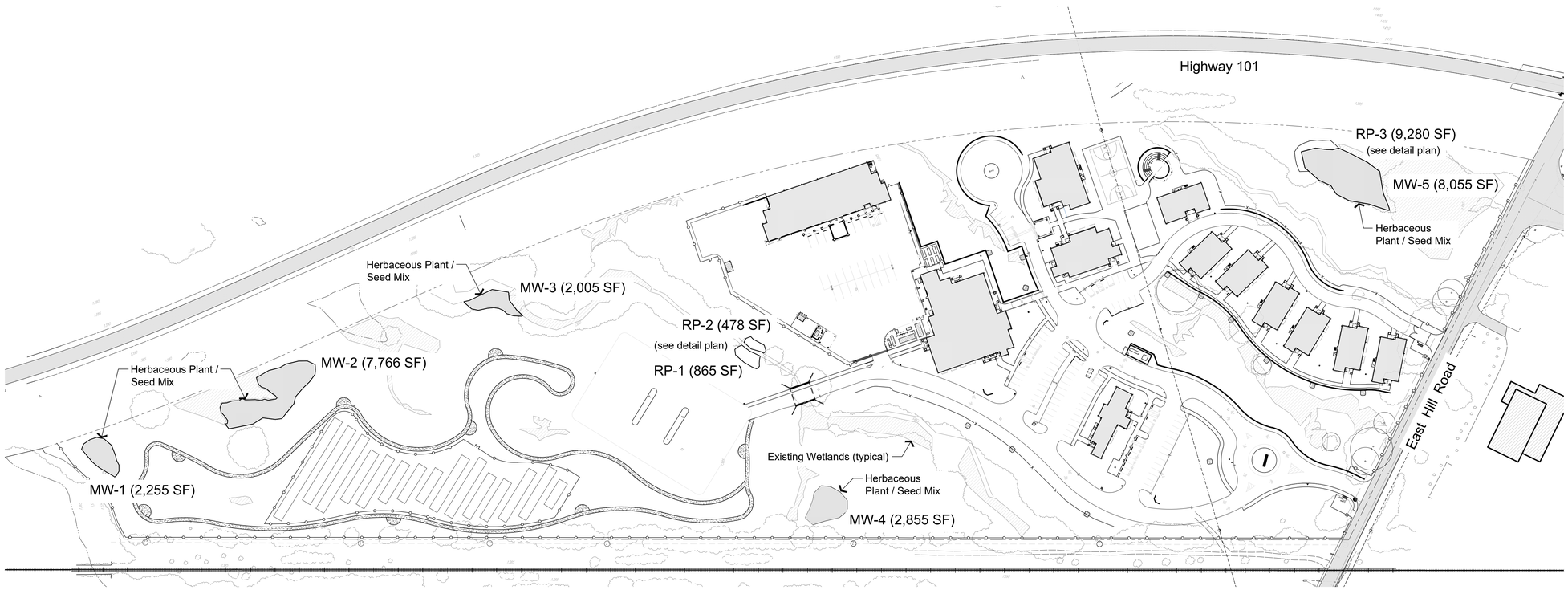

Mitigation Wetland Planting Plan

1" = 80'

IDENTIFICATION STAMP
DIV. OF THE STATE ARCHITECT
APP: 02-118630 INC:
REVIEWED FOR
SS ☐ FLS ☐ ACS ☑
DATE: 04/13/2021

OFFICE OF THE STATE FIRE MARSHAL
APPROVED FIRE AND PANIC ONLY
Approval of this plan does not authorize or approve any omission or deviation from applicable regulations. Final approval is subject to field inspection. One set of approved plans shall be available on the project site at all times.
PERMIT NO. 2019-2332-CP
REVIEWED BY LEO CATAYLO, OSFM
DATE: 4/ / /2021

Department of General Services
State of California
Real Estate Services Division
Project Management & Development Branch
707 Third Street, Suite 4-105
West Sacramento, California 95605

NICHOLS MELBURG & ROSSETTO ARCHITECTS + ENGINEERS
300 Knollcrest Drive
Redding, CA. 96002
(530) 222-3300 (530) 222-3538 FAX
http://www.nmrdesign.com

Copyright © 2021
All ideas, designs, arrangements and plans indicated or represented by this drawing are owned by, and the property of, NICHOLS, MELBURG and ROSSETTO and were created, evolved and developed for use on, and in conjunction with, the specified project. None of such ideas, designs, arrangements or plans shall be used by, or disclosed to any person, firm or corporation for any purpose whatsoever without the written permission of NICHOLS, MELBURG and ROSSETTO.

LICENSE STAMPS

REGISTERED LANDSCAPE ARCHITECT MICHAEL J. LANDER 2399 Exp: 12/31/21 STATE OF CALIFORNIA

CONSULTANT

Michael Lander ASLA
Landscape Architecture
RLA 2399
20270 Lupine Drive Redding, California 96002
(530) 223-2488 mlander@shasta.com

DRAWING STATUS

CONSTRUCTION DOCUMENTS

ISSUE

No.	Date	Description
1	10/22/2020	INITIAL PLAN REVIEW
2	01/08/2021	AGENCY RESUBMITTAL

If drawing is not 30" x 42" it is a reduced print

PROJECT

RESIDENTIAL CENTER, UKIAH: REPLACEMENT OF EXISTING RESIDENTIAL CENTER

440 EAST HILL ROAD
WILLITS, CALIFORNIA, 95490
MENDOCINO COUNTY
CALIFORNIA CONSERVATION CORPS

Supervisor	Designed	Drawn
	ML	ML

DSA Application No.
02-118630

SHEET TITLE

MITIGATION WETLAND PLANTING PLAN
IRRIGATION PLAN

DGS Project Number 000000000001826
NMR Project Number 18-6456

Reference North
Sheet Scale As shown
Sheet Number L10

ISSUE DATE
July 9, 2021

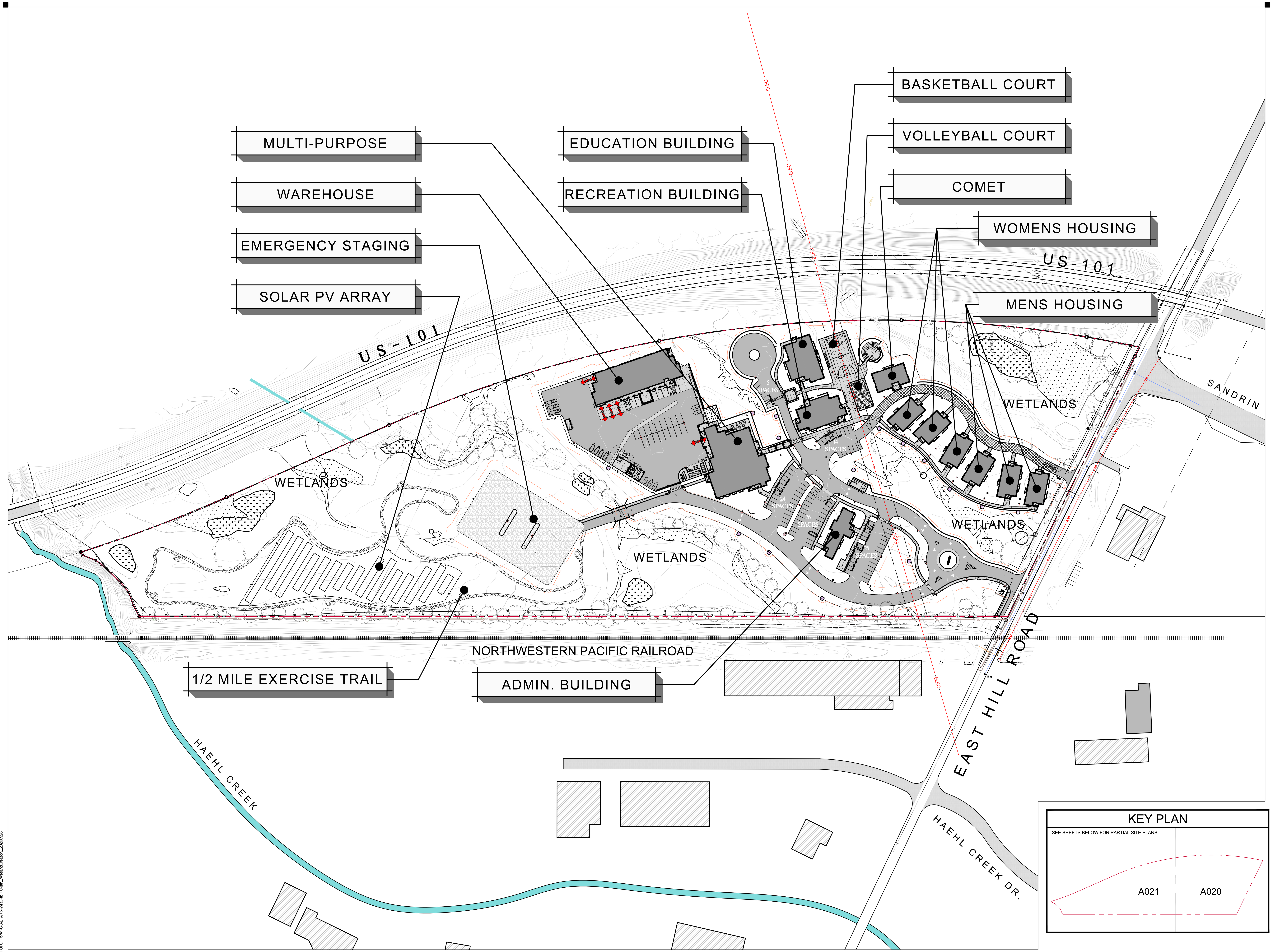

REFERENCE NORTH
TRUE NORTH

OVERALL SITE PLAN

SCALE: 1" = 80'-0"

0' 40' 80' 160' 320'

IDENTIFICATION STAMP
DIV. OF THE STATE ARCHITECT
APP: 02-118630 INC:
REVIEWED FOR
SS ☐ FLS ☐ ACS ☑
DATE: 04/13/2021

OFFICE OF THE STATE FIRE MARSHAL
APPROVED FIRE AND PANIC ONLY
Approval of this plan does not authorize or approve any omission or deviation from applicable regulations. Final approval is subject to field inspection. One set of approved plans shall be available on the project site at all times.
PERMIT NO.: 20-N-2332-CP
REVIEWED BY: LITO CATAYLO, OSFM
DATE: 3/ / /2021

GENERAL SERVICES
Department of General Services
State of California
Real Estate Services Division
Project Management & Development Branch
707 Third Street, Suite 4-105
West Sacramento, California 95605

NICHOLS MELBURG & ROSSETTO
ARCHITECTS + ENGINEERS
300 Knollcrest Drive
Redding, CA. 96002
(530) 222-3300 (530) 222-3538 FAX
http://www.nmrdesign.com

Copyright © 2021
All ideas, designs, arrangements and plans indicated or represented by this drawing are owned by, and the property of, NICHOLS, MELBURG and ROSSETTO and were created, evolved and developed for use on, and in conjunction with, the specified project. None of such ideas, designs, arrangements or plans shall be used by, or disclosed to any person, firm or corporation for any purpose whatsoever without the written permission of NICHOLS, MELBURG and ROSSETTO.

LICENSE STAMPS
LICENSED ARCHITECT
KYLE MATTI
C 27504
REN. 10/31/21
STATE OF CALIFORNIA

CONSULTANT

DRAWING STATUS
CONSTRUCTION DOCUMENTS

ISSUE

No.	Date	Description
1	10/22/2020	INITIAL PLAN REVIEW
2	01/08/2021	AGENCY RESUBMITTAL
3	03/22/2021	AGENCY RESUBMITTAL

If drawing is not 30" x 42" it is a reduced print

PROJECT
RESIDENTIAL CENTER, UKIAH: REPLACEMENT OF EXISTING RESIDENTIAL CENTER
440 EAST HILL ROAD
WILLITS, CALIFORNIA, 95490
MENDOCINO COUNTY
CALIFORNIA CONSERVATION CORPS

Supervisor	Designed	Drawn
KJM	DMH	DMH

DSA Application No.
02-118630

SHEET TITLE
OVERALL SITE PLAN

DGS Project Number: 000000000001826
NMR Project Number: 18-6456

Reference North
Sheet Scale: 1" = 80'-0"
Sheet Number: A010

ISSUE DATE
July 9, 2021

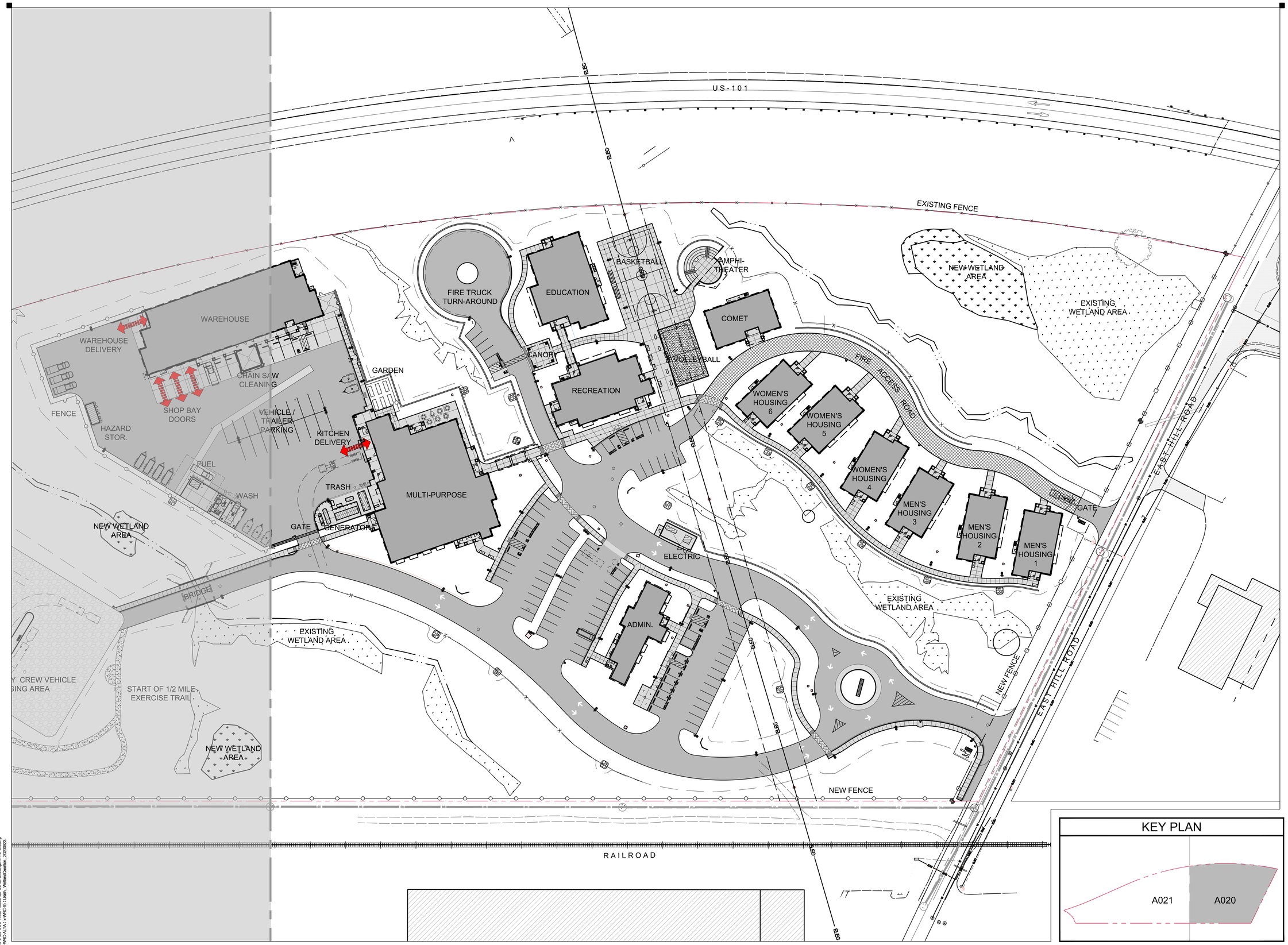

KEY PLAN

SITE PLAN - SOUTH

SCALE: 1" = 40'-0"

REFERENCE NORTH | TRUE NORTH

0' 20' 40' 80' 160'

IDENTIFICATION STAMP
DIV. OF THE STATE ARCHITECT
APP: 02-118630 INC:
REVIEWED FOR
SS ☐ FLS ☐ ACS ☑
DATE: 04/13/2021

OFFICE OF THE STATE FIRE MARSHAL
APPROVED FIRE AND PANIC ONLY
Approval of this plan does not authorize or approve any omission or deviation from applicable regulations. Final approval is subject to field inspection. One set of approved plans shall be available on the project site at all times.
PERMIT NO. 2019-2332-CP
REVIEWED BY: LEO CATAYLO, OSFM
DATE: 4 / /2021

DGS GENERAL SERVICES
Department of General Services
State of California
Real Estate Services Division
Project Management & Development Branch
707 Third Street, Suite 4-105
West Sacramento, California 95605

NICHOLS MELBURG & ROSSETTO
ARCHITECTS + ENGINEERS
300 Knollcrest Drive
Redding, CA. 96002
(530) 222-3300 (530) 222-3538 FAX
http://www.nmrdesign.com

Copyright © 2021
All ideas, designs, arrangements and plans indicated or represented by this drawing are owned by, and the property of, NICHOLS, MELBURG and ROSSETTO and were created, evolved and developed for use on, and in conjunction with, the specified project. None of such ideas, designs, arrangements or plans shall be used by, or disclosed to any person, firm or corporation for any purpose whatsoever without the written permission of NICHOLS, MELBURG and ROSSETTO.

LICENSE STAMPS

LICENSED ARCHITECT KYLE MATTI C 27504 REN. 10/31/21 STATE OF CALIFORNIA

CONSULTANT

DRAWING STATUS

CONSTRUCTION DOCUMENTS

ISSUE

No.	Date	Description
1	10/22/2020	INITIAL PLAN REVIEW
2	01/08/2021	AGENCY RESUBMITTAL
3	03/22/2021	AGENCY RESUBMITTAL

If drawing is not 30" x 42" it is a reduced print

PROJECT

RESIDENTIAL CENTER, UKIAH: REPLACEMENT OF EXISTING RESIDENTIAL CENTER

440 EAST HILL ROAD
WILLITS, CALIFORNIA, 95490
MENDOCINO COUNTY
CALIFORNIA CONSERVATION CORPS

Supervisor	Designed	Drawn
KJM	DMH	DMH

DSA Application No.
02-118630

SHEET TITLE

SITE PLAN - SOUTH

DGS Project Number: 0000000000001826
NMR Project Number: 18-6456

Reference North
Sheet Scale: 1" = 40'-0"
Sheet Number: A020

ISSUE DATE

July 9, 2021

Login Name: Daryn H
Plot Date: March 26, 2021 - 1:53 pm
File Name: N:\Projects\6000\Dwk\2018\18-6456 CCC Willits Residential Center\Drawings\WRC.dwg
XREFS: x-WRC-site_b x-WRC-DEMO_b x-WRC-PLAN_b x-WRC-ttb Data_Master.dwt Master_L2000000

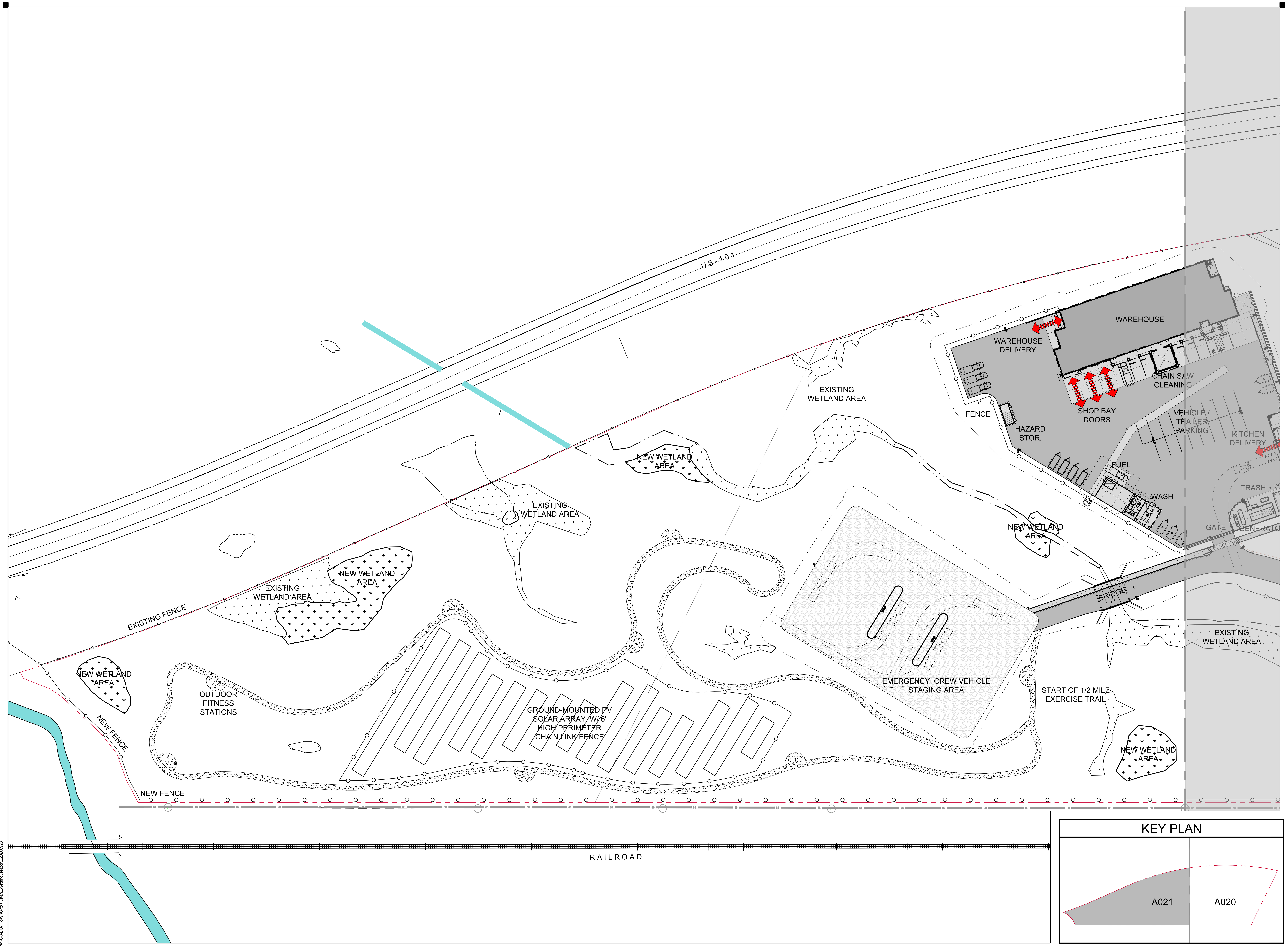

SITE PLAN - NORTH

SCALE: 1" = 40'-0"

IDENTIFICATION STAMP
DIV. OF THE STATE ARCHITECT
APP: 02-118630 INC:
REVIEWED FOR
SS ☐ FLS ☐ ACS ☑
DATE: 04/13/2021

OFFICE OF THE STATE FIRE MARSHAL
APPROVED FIRE AND PANIC ONLY
Approval of this plan does not authorize or approve any omission or deviation from applicable regulations. Final approval is subject to field inspection. One set of approved plans shall be available on the project site at all times.
PERMIT NO: 20-N-2332-CP
REVIEWED BY: LEO CATAYLO, OSFM
DATE: 3/1/2021

DGS
GENERAL SERVICES
Department of General Services
State of California
Real Estate Services Division
Project Management & Development Branch
707 Third Street, Suite 4-105
West Sacramento, California 95605

NM&R
NICHOLS MELBURG & ROSSETTO
ARCHITECTS + ENGINEERS
300 Knollcrest Drive
Redding, CA. 96002
(530) 222-3300 (530) 222-3538 FAX
http://www.nmrdesign.com

Copyright © 2021
All ideas, designs, arrangements and plans indicated or represented by this drawing are owned by, and the property of, NICHOLS, MELBURG and ROSSETTO and were created, evolved and developed for use on, and in conjunction with, the specified project. None of such ideas, designs, arrangements or plans shall be used by, or disclosed to any person, firm or corporation for any purpose whatsoever without the written permission of NICHOLS, MELBURG and ROSSETTO.

LICENSE STAMPS
LICENSED ARCHITECT
KYLE MATTI
C 27504
REN. 10/31/21
STATE OF CALIFORNIA

CONSULTANT

DRAWING STATUS
CONSTRUCTION DOCUMENTS

ISSUE

No.	Date	Description
1	10/22/2020	INITIAL PLAN REVIEW
2	01/08/2021	AGENCY RESUBMITTAL
3	03/22/2021	AGENCY RESUBMITTAL

If drawing is not 30" x 42" it is a reduced print

PROJECT
RESIDENTIAL CENTER, UKIAH: REPLACEMENT OF EXISTING RESIDENTIAL CENTER
440 EAST HILL ROAD
WILLITS, CALIFORNIA, 95490
MENDOCINO COUNTY
CALIFORNIA CONSERVATION CORPS

Supervisor	Designed	Drawn
KJM	DMH	DMH

DSA Application No.
02-118630

SHEET TITLE
SITE PLAN - NORTH

DGS Project Number	NMR Project Number
000000000001826	18-6456

Reference North | Sheet Scale 1" = 40'-0"
NORTH | Sheet Number A021

ISSUE DATE
July 9, 2021

Login Name: Daryl H
Plot Date: March 26, 2021 - 1:52 pm
File Name: N:\Projects\6000\Oak\2018\18-6456 CCC Willits Residential Center\Drawing\WRC-site.dwg
XREFS: x-WRC-site | x-WRC-ALTA | x-WRC-tb | x-WRC-TOPO | x-WRC-TOPO | Ukiah_WetlandCreation_20200603

KEYNOTES

01.100	PROTECTED GRASS AREA
10.102	FIRE DEPARTMENT EMERGENCY KEY ACCESS (KNOX BOX)
12.103	BIKE LOCKER
12.105	EXTERIOR ENTRANCE MAT WITH RECESSED METAL FRAME, SEE DETAIL 16/A060
21.100	FIRE HYDRANT, SEE CIVIL
23.100	OUTDOOR MECHANICAL UNIT ON CONCRETE PAD - SEE MECHANICAL DRAWINGS
32.100	BLACK VINYL COATED CHAIN LINK FENCE, 6' HIGH, SEE DETAIL 13/A061
32.102	EXISTING BARBED WIRE FENCE TO REMAIN, APPROXIMATELY 4' HIGH
32.105	BLACK METAL PICKET SWING GATE, 6' HIGH, MANUAL OPERATION, SEE DETAIL 4/A061
32.106	BLACK METAL PICKET FENCE, 6' HIGH, SEE DETAIL 2/A061
32.116	STACKED STONE RETAINING WALL, SEE DETAIL 19/A064
32.120	CEDAR SPLIT RAIL FENCE, SEE DETAIL 16/A061
33.102	SANITARY SEWER MANHOLE

LEGEND

ELEC	EXISTING OVERHEAD PG&E POWER LINE
	SETBACK
	GRADING LIMITS AND EROSION CONTROL BOUNDARY
	REINFORCED CONCRETE WALK, SEE CIVIL DRAWINGS AND DETAILS 12/A060 20/A060 BROOM FINISH
	AC PAVING O/ AGGREGATE BASE, SEE CIVIL DRAWINGS
	STAMPED CONCRETE PAVING O/ AGGREGATE BASE, SEE CIVIL DRAWINGS
	TRAFFIC-RATED CONCRETE PAVER, SEE DETAIL 14/A061
	EXISTING WETLANDS AREA TO BE PROTECTED, SEE ENVIRONMENTAL PERMITS
	NEW MITIGATION WETLANDS AREA, SEE LANDSCAPE DRAWINGS AND ENVIRONMENTAL PERMITS
	EXISTING TREE TO REMAIN

KEY PLAN

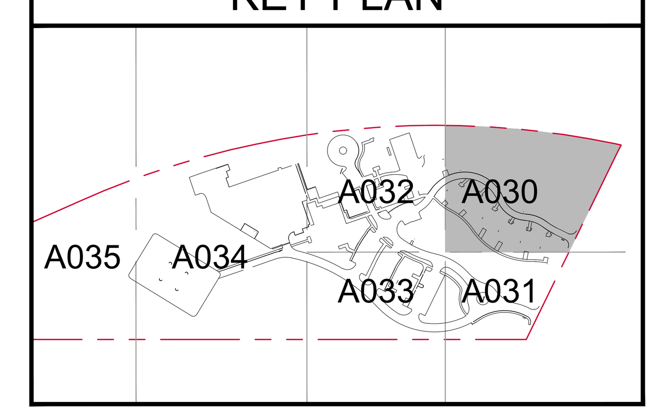

ENLARGED SITE PLAN - SOUTHEAST

SCALE: 1" = 20'-0"

REFERENCE NORTH TRUE NORTH

0' 10' 20' 40' 80'

IDENTIFICATION STAMP
DIV. OF THE STATE ARCHITECT
APP: 02-118630 INC:
REVIEWED FOR
SS ☐ FLS ☐ ACS ☑
DATE: 04/13/2021

OFFICE OF THE STATE FIRE MARSHAL
APPROVED FIRE AND PANIC ONLY
Approval of this plan does not authorize or approve any omission or deviation from applicable regulations. Final approval is subject to field inspection. One set of approved plans shall be available on the project site at all times.
PERMIT NO.: 20-N-2332-CP
REVIEWED BY: LITO CATAYLO, OSFM
DATE: 3/1/2021

GENERAL SERVICES
Department of General Services
State of California
Real Estate Services Division
Project Management & Development Branch
707 Third Street, Suite 4-105
West Sacramento, California 95605

NICHOLS MELBURG & ROSSETTO
ARCHITECTS + ENGINEERS
300 Knollcrest Drive
Redding, CA. 96002
(530) 222-3300 (530) 222-3538 FAX
http://www.nmrdesign.com

Copyright © 2021
All ideas, designs, arrangements and plans indicated or represented by this drawing are owned by, and the property of, NICHOLS, MELBURG and ROSSETTO and were created, evolved and developed for use on, and in conjunction with, the specified project. None of such ideas, designs, arrangements or plans shall be used by, or disclosed to any person, firm or corporation for any purpose whatsoever without the written permission of NICHOLS, MELBURG and ROSSETTO.

LICENSE STAMPS
LICENSED ARCHITECT KYLE MATTI C 27504 REN. 10/31/21 STATE OF CALIFORNIA

CONSULTANT

DRAWING STATUS
CONSTRUCTION DOCUMENTS

ISSUE

No.	Date	Description
1	10/22/2020	INITIAL PLAN REVIEW
2	01/08/2021	AGENCY RESUBMITTAL
3	03/22/2021	AGENCY RESUBMITTAL

If drawing is not 30" x 42" it is a reduced print

PROJECT
RESIDENTIAL CENTER, UKIAH: REPLACEMENT OF EXISTING RESIDENTIAL CENTER
440 EAST HILL ROAD
WILLITS, CALIFORNIA, 95490
MENDOCINO COUNTY
CALIFORNIA CONSERVATION CORPS

Supervisor	Designed	Drawn
KJM	DMH	DMH

DSA Application No. 02-118630

SHEET TITLE
ENLARGED SITE PLAN - SOUTHEAST

DGS Project Number 000000000001826
NMR Project Number 18-6456

Reference North
Sheet Scale 1" = 20'-0"
Sheet Number A030

ISSUE DATE
July 9, 2021

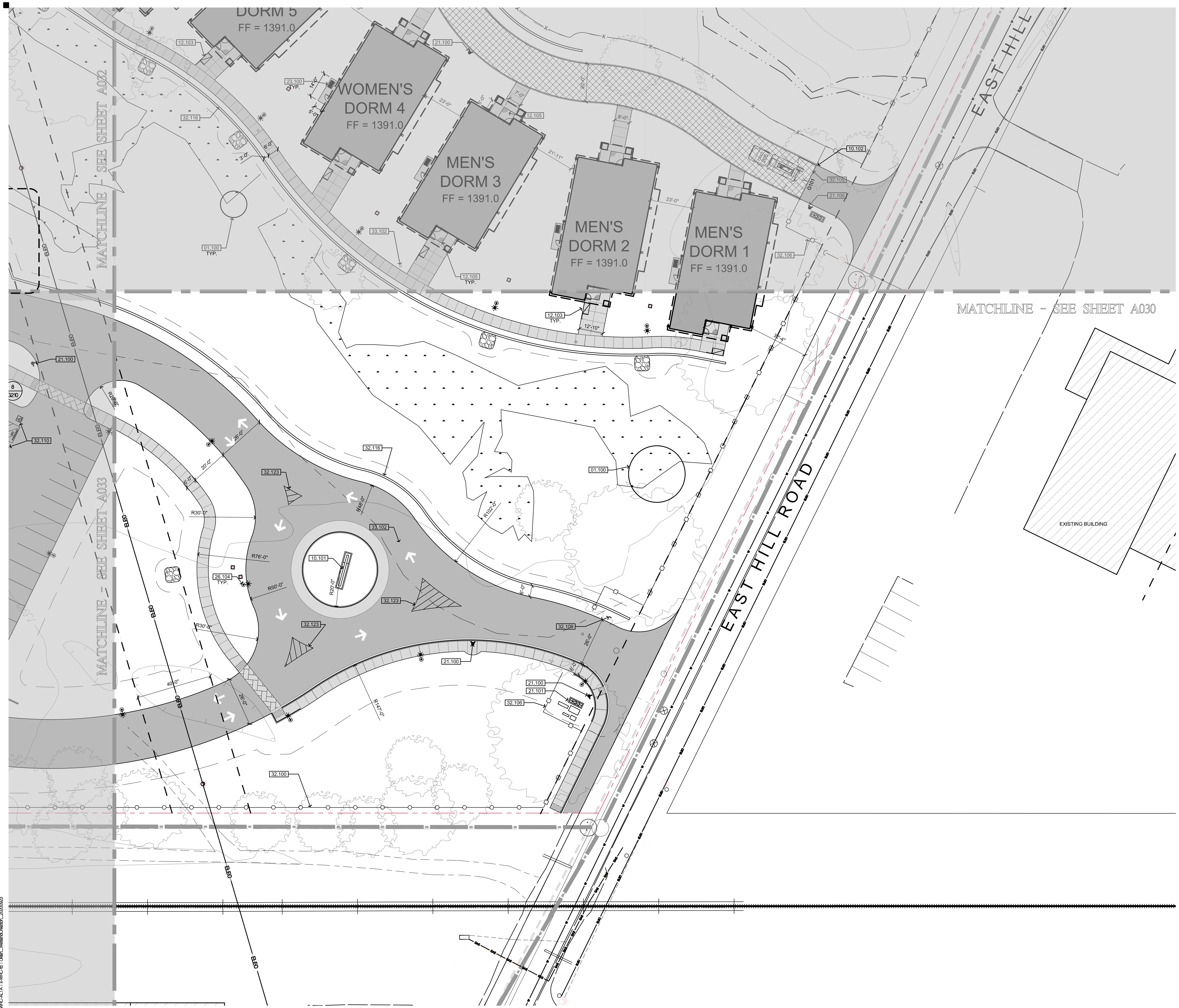

KEYNOTES

01.100	PROTECTED GRASS AREA
10.101	MONUMENT SIGN, SEE DETAIL 13/A063
12.103	BIKE LOCKER
21.100	FIRE HYDRANT, SEE CIVIL
21.101	MAIN WATER SERVICE RPP, SEE CIVIL
26.104	POLE-MOUNTED SITE LIGHT, SEE ELECTRICAL DRAWINGS
32.100	BLACK VINYL COATED CHAIN LINK FENCE, 6' HIGH, SEE DETAIL 13/A061
32.106	BLACK METAL PICKET FENCE, 6' HIGH, SEE DETAIL 2/A061
32.109	ACCESSIBLE PARKING TOW SIGN AND POST, SEE DETAIL 6/G210
32.116	STACKED STONE RETAINING WALL, SEE DETAIL 19/A064
32.123	PAVEMENT STRIPING - SEE CIVIL DRAWINGS
33.102	SANITARY SEWER MANHOLE, SEE CIVIL

LEGEND

- ELEC — EXISTING OVERHEAD PG&E POWER LINE
- SETBACK
- GRADING LIMITS AND EROSION CONTROL BOUNDARY
- REINFORCED CONCRETE WALK, SEE CIVIL DRAWINGS AND DETAILS 12/A060 20/A060 BROOM FINISH
- AC PAVING O/ AGGREGATE BASE, SEE CIVIL DRAWINGS
- STAMPED CONCRETE PAVING O/ AGGREGATE BASE, SEE CIVIL DRAWINGS
- TRAFFIC-RATED CONCRETE PAVER, SEE DETAIL 14/A061
- EXISTING WETLANDS AREA TO BE PROTECTED, SEE ENVIRONMENTAL PERMITS
- NEW MITIGATION WETLANDS AREA, SEE LANDSCAPE DRAWINGS AND ENVIRONMENTAL PERMITS
- EXISTING TREE TO REMAIN

KEY PLAN

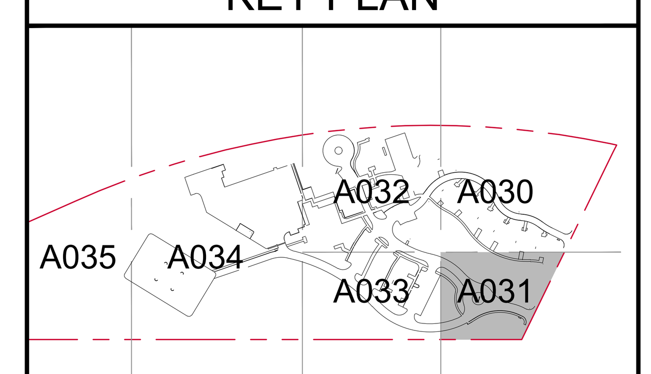

REFERENCE NORTH | TRUE NORTH

ENLARGED SITE PLAN - SOUTHWEST

SCALE: 1" = 20'-0"

0' 10' 20' 40' 80'

IDENTIFICATION STAMP
DIV. OF THE STATE ARCHITECT
APP: 02-118630 INC:
REVIEWED FOR
SS ☐ FLS ☐ ACS ☑
DATE: 04/13/2021

OFFICE OF THE STATE FIRE MARSHAL
APPROVED FIRE AND PANIC ONLY
Approval of this plan does not authorize or approve any omission or deviation from applicable regulations. Final approval is subject to field inspection. One set of approved plans shall be available on the project site at all times.
PERMIT NO.: 20-N-2332-CP
REVIEWED BY: LITO CATAYLO, OSFM
DATE: 3/ 1 /2021

GENERAL SERVICES
Department of General Services
State of California
Real Estate Services Division
Project Management & Development Branch
707 Third Street, Suite 4-105
West Sacramento, California 95605

NICHOLS MELBURG & ROSSETTO
ARCHITECTS + ENGINEERS
300 Knollcrest Drive
Redding, CA. 96002
(530) 222-3300 (530) 222-3538 FAX
http://www.nmrdesign.com

Copyright © 2021
All ideas, designs, arrangements and plans indicated or represented by this drawing are owned by, and the property of, NICHOLS, MELBURG and ROSSETTO and were created, evolved and developed for use on, and in conjunction with, the specified project. None of such ideas, designs, arrangements or plans shall be used by, or disclosed to any person, firm or corporation for any purpose whatsoever without the written permission of NICHOLS, MELBURG and ROSSETTO.

LICENSE STAMPS
LICENSED ARCHITECT KYLE MATTI C 27504 REN. 10/31/21 STATE OF CALIFORNIA

CONSULTANT

DRAWING STATUS
CONSTRUCTION DOCUMENTS

ISSUE

No.	Date	Description
1	10/22/2020	INITIAL PLAN REVIEW
2	01/08/2021	AGENCY RESUBMITTAL
3	03/22/2021	AGENCY RESUBMITTAL

If drawing is not 30" x 42" it is a reduced print

PROJECT
RESIDENTIAL CENTER, UKIAH: REPLACEMENT OF EXISTING RESIDENTIAL CENTER
440 EAST HILL ROAD
WILLITS, CALIFORNIA, 95490
MENDOCINO COUNTY
CALIFORNIA CONSERVATION CORPS

Supervisor	Designed	Drawn
KJM	DMH	DMH

DSA Application No.
02-118630

SHEET TITLE
ENLARGED SITE PLAN - SOUTHWEST

DGS Project Number	NMR Project Number
000000000001826	18-6456

Reference North: NORTH
Sheet Scale: 1" = 20'-0"
Sheet Number: A031

ISSUE DATE
July 9, 2021

ENLARGED SITE PLAN - EAST

SCALE: 1" = 20'-0"

REFERENCE NORTH   TRUE NORTH

0' 10' 20' 40' 80'

KEYNOTES

04.101	8x8x16 CMU ELECTRIC GEAR ENCLOSURE, SEE DETAIL 8/A060
10.105	"FIRE EXTINGUISHER" SIGN, SEE SIGN TYPE 'N' ON SHEET A965
10.107	FIRE EXTINGUISHER, PROVIDE OUTDOOR CABINET MOUNTED TO UNISTRUT FRAME AND ANCHORED TO CONCRETE. CATO CHIEF CABINET, OR EQUAL.
12.100	PRECAST CONCRETE OUTDOOR TABLE W/ BENCH SEATING, PROVIDE ACCESSIBLE TABLES WHERE SHOWN
12.101	PARK BENCH
12.102	3-ROW OUTDOOR BLEACHER SEATING
12.103	BIKE LOCKER
12.105	EXTERIOR ENTRANCE MAT WITH RECESSED METAL FRAME, SEE DETAIL 16/A060
12.106	BIKE RACK, FOR ANCHORAGE SEE 9/A061
13.101	PREFABRICATED STEEL GATHERING CANOPY, SEE DETAIL 4/A050
13.102	PREFABRICATED STEEL COVERED WALKWAY CANOPY, SEE DETAIL 2/A050
13.103	PREFABRICATED STEEL AMPHITHEATER CANOPY, SEE DETAIL 1/A050
21.100	FIRE HYDRANT, SEE CIVIL
23.100	OUTDOOR MECHANICAL UNIT ON CONCRETE PAD - SEE MECHANICAL DRAWINGS
26.102	MAIN ELECTRIC SWITCHGEAR - SEE ELECTRICAL DRAWINGS
26.103	ELECTRIC TRANSFORMER - SEE ELECTRICAL DRAWINGS
26.104	POLE-MOUNTED SITE LIGHT, SEE ELECTRICAL DRAWINGS
31.100	ROCK SLOPE PROTECTION - SEE CIVIL DRAWINGS
32.102	EXISTING BARBED WIRE FENCE TO REMAIN, APPROXIMATELY 4' HIGH
32.104	CONCRETE BASKETBALL COURT W/ STRIPING, IN-GROUND HOOP, SEE DETAIL 12/A061
32.107	SAND VOLLEYBALL COURT W/ CONCRETE CONTAINMENT CURB, NET SYSTEM AND MARKING LINES, SEE 16/A062
32.108	ACCESSIBLE PARKING SIGN AND POST, SEE DETAIL 5/G210
32.110	ACCESSIBLE PARKING STALLS, SEE DETAIL 1/G210
32.112	WHEELSTOP, SEE DETAIL 7/A060, 15/G210
32.113	CHAIN LINK GATE, SEE DETAIL 1/A061
32.116	STACKED STONE RETAINING WALL, SEE DETAIL 19/A064
32.117	STACKED STONE AMPHITHEATER RETAINING WALL, SEE DETAIL 1/A064
32.120	CEDAR SPLIT RAIL FENCE, SEE DETAIL 16/A061
32.121	WETLANDS EDUCATIONAL KIOSK, SEE DETAIL 17/A061
33.102	SANITARY SEWER MANHOLE

LEGEND

ELEC	EXISTING OVERHEAD PG&E POWER LINE
	SETBACK
	GRADING LIMITS AND EROSION CONTROL BOUNDARY
	REINFORCED CONCRETE WALK, SEE CIVIL DRAWINGS AND DETAILS 12/A060, 20/A060 BROOM FINISH
	AC PAVING O/ AGGREGATE BASE, SEE CIVIL DRAWINGS
	STAMPED CONCRETE PAVING O/ AGGREGATE BASE, SEE CIVIL DRAWINGS
	TRAFFIC-RATED CONCRETE PAVER, SEE DETAIL 14/A061
	EXISTING WETLANDS AREA TO BE PROTECTED, SEE ENVIRONMENTAL PERMITS
	NEW MITIGATION WETLANDS AREA, SEE LANDSCAPE DRAWINGS AND ENVIRONMENTAL PERMITS
	EXISTING TREE TO REMAIN

KEY PLAN

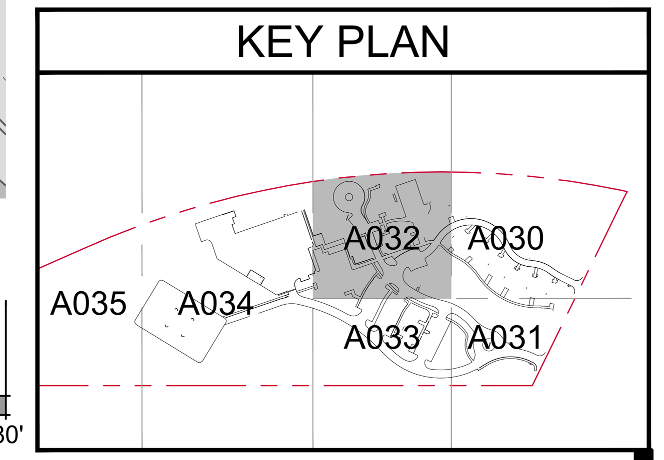

IDENTIFICATION STAMP
DIV. OF THE STATE ARCHITECT
APP: 02-118630 INC:
REVIEWED FOR
SS ☐ FLS ☐ ACS ☑
DATE: 04/13/2021

OFFICE OF THE STATE FIRE MARSHAL
APPROVED FIRE AND PANIC ONLY
Approval of this plan does not authorize or approve any omission or deviation from applicable regulations. Final approval is subject to field inspection. One set of approved plans shall be available on the project site at all times.
PERMIT NO.: 20-N-2332-CP
REVIEWED BY: LITO CATAYLO, OSFM
DATE: 4/1/2021

GENERAL SERVICES
Department of General Services
State of California
Real Estate Services Division
Project Management & Development Branch
707 Third Street, Suite 4-105
West Sacramento, California 95605

NICHOLS MELBURG & ROSSETTO ARCHITECTS + ENGINEERS
300 Knollcrest Drive
Redding, CA. 96002
(530) 222-3300 (530) 222-3538 FAX
http://www.nmrdesign.com

Copyright © 2021
All ideas, designs, arrangements and plans indicated or represented by this drawing are owned by, and the property of, NICHOLS, MELBURG and ROSSETTO and were created, evolved and developed for use on, and in connection with, the specified project. None of such ideas, designs, arrangements or plans shall be used by, or disclosed to any person, firm or corporation for any purpose whatsoever without the written permission of NICHOLS, MELBURG and ROSSETTO.

LICENSE STAMPS
LICENSED ARCHITECT KYLE MATTI C 27504 REN. 10/31/21 STATE OF CALIFORNIA

CONSULTANT

DRAWING STATUS
CONSTRUCTION DOCUMENTS

ISSUE

No.	Date	Description
1	10/22/2020	INITIAL PLAN REVIEW
2	01/08/2021	AGENCY RESUBMITTAL
3	03/22/2021	AGENCY RESUBMITTAL

If drawing is not 30" x 42" it is a reduced print

PROJECT
RESIDENTIAL CENTER, UKIAH: REPLACEMENT OF EXISTING RESIDENTIAL CENTER
440 EAST HILL ROAD
WILLITS, CALIFORNIA, 95490
MENDOCINO COUNTY
CALIFORNIA CONSERVATION CORPS

Supervisor	Designed	Drawn
KJM	DMH	DMH

DSA Application No.
02-118630

SHEET TITLE
ENLARGED SITE PLAN - EAST

DGS Project Number 000000000001826
NMR Project Number 18-6456

Reference North: NORTH
Sheet Scale 1" = 20'-0"
Sheet Number A032

ISSUE DATE
July 9, 2021

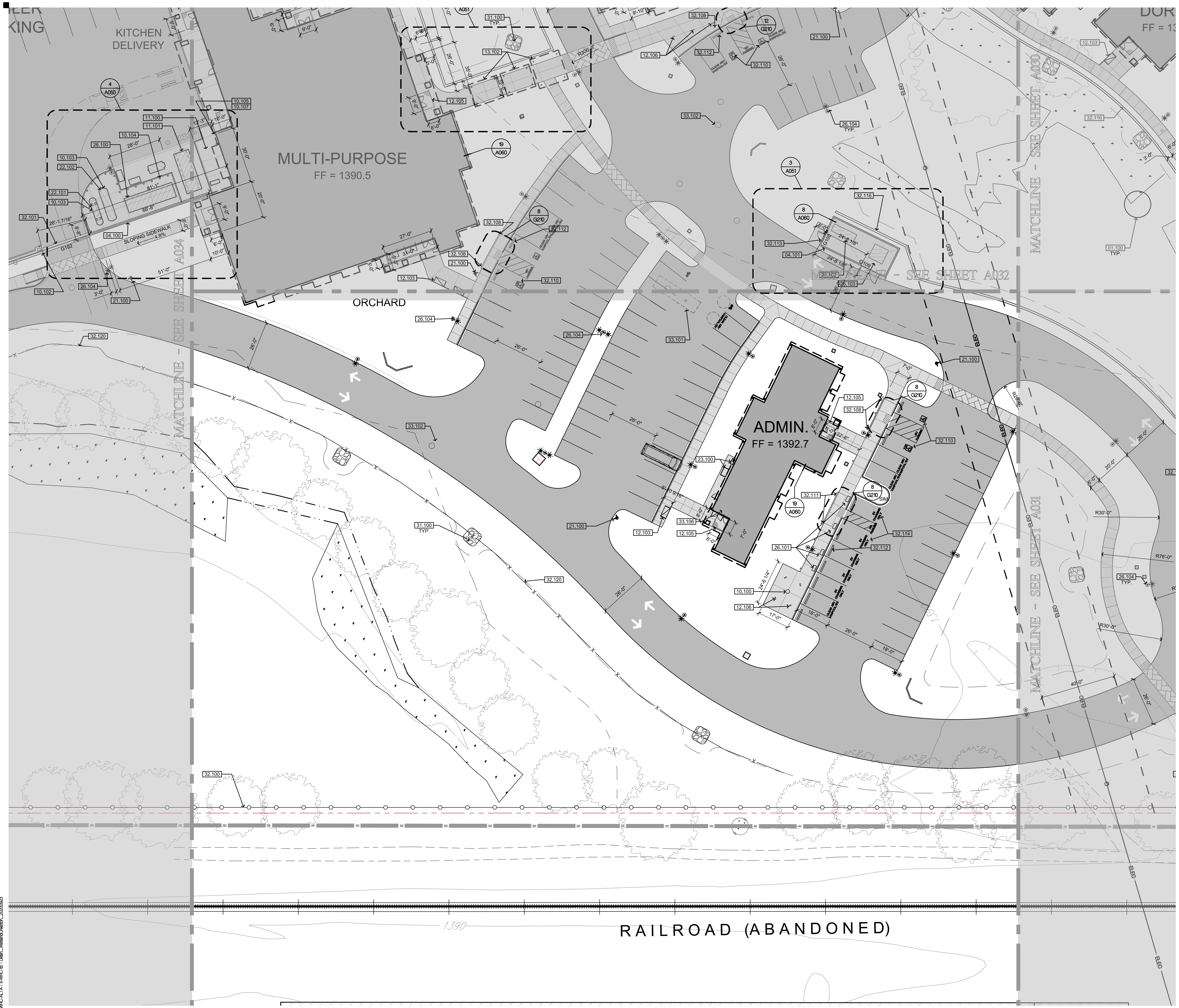

KEYNOTES

10.100	30' FLAG POLE W/ POLE-MOUNTED DOWNLIGHTS, SEE DETAIL 10/A061
12.103	BIKE LOCKER
12.105	EXTERIOR ENTRANCE MAT WITH RECESSED METAL FRAME, SEE DETAIL 16/A060
12.106	BIKE RACK, FOR ANCHORAGE SEE 9/A061
21.100	FIRE HYDRANT, SEE CIVIL
23.100	OUTDOOR MECHANICAL UNIT ON CONCRETE PAD - SEE MECHANICAL DRAWINGS
26.101	ELECTRIC VEHICLE CHARGING STATION - SEE ELECTRICAL DRAWINGS
26.104	POLE-MOUNTED SITE LIGHT, SEE ELECTRICAL DRAWINGS
31.100	ROCK SLOPE PROTECTION - SEE CIVIL DRAWINGS
32.100	BLACK VINYL COATED CHAIN LINK FENCE, 6' HIGH, SEE DETAIL 13/A061
32.108	ACCESSIBLE PARKING SIGN AND POST, SEE DETAIL 5/G210
32.110	ACCESSIBLE PARKING STALLS, SEE DETAIL 1/G210
32.111	ELECTRIC VEHICLE CHARGING SIGN AND POST, SEE DETAIL 11/G210
32.112	WHEELSTOP, SEE DETAILS 7/A060 15/G210
32.114	ACCESSIBLE ELECTRIC VEHICLE CHARGING STATIONS, SEE DETAIL 2/G210
32.120	CEDAR SPLIT RAIL FENCE, SEE DETAIL 16/A061
33.101	UNDERGROUND SEWER LIFT STATION - SEE CIVIL DRAWINGS
33.102	SANITARY SEWER MANHOLE
33.106	SEWER SYSTEM CONTROL PANEL, MOUNT TO WALL INSIDE ELEC. CLOSET, PROVIDE CONNECTIONS TO PANEL AS REQUIRED

LEGEND

- ELEC — EXISTING OVERHEAD PG&E POWER LINE
- SETBACK
- GRADING LIMITS AND EROSION CONTROL BOUNDARY
- REINFORCED CONCRETE WALK, SEE CIVIL DRAWINGS AND DETAILS 12/A060 20/A060 BROOM FINISH
- AC PAVING O/ AGGREGATE BASE, SEE CIVIL DRAWINGS
- STAMPED CONCRETE PAVING O/ AGGREGATE BASE, SEE CIVIL DRAWINGS
- TRAFFIC-RATED CONCRETE PAVER, SEE DETAIL 14/A061
- EXISTING WETLANDS AREA TO BE PROTECTED, SEE ENVIRONMENTAL PERMITS
- NEW MITIGATION WETLANDS AREA, SEE LANDSCAPE DRAWINGS AND ENVIRONMENTAL PERMITS
- EXISTING TREE TO REMAIN

KEY PLAN

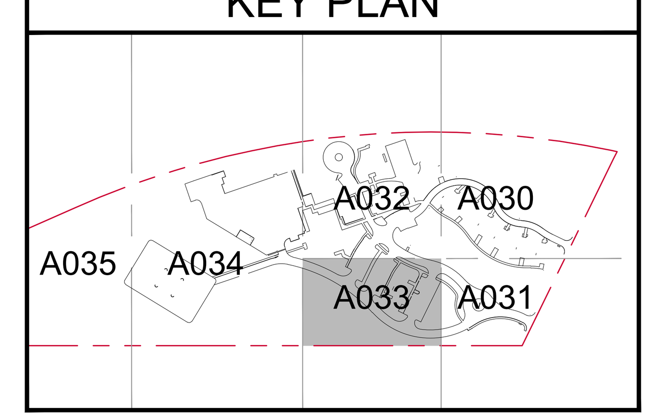

IDENTIFICATION STAMP
DIV. OF THE STATE ARCHITECT
APP: 02-118630 INC:
REVIEWED FOR
SS ☐ FLS ☐ ACS ☑
DATE: 04/13/2021

OFFICE OF THE STATE FIRE MARSHAL
APPROVED FIRE AND PANIC ONLY
Approval of this plan does not authorize or approve any omission or deviation from applicable regulations. Final approval is subject to field inspection. One set of approved plans shall be available on the project site at all times.
PERMIT NO.: 20-N-2332-CP
REVIEWED BY: LITO CATAYLO, OSFM
DATE: 4/1/2021

DGS
GENERAL SERVICES
Department of General Services
State of California
Real Estate Services Division
Project Management & Development Branch
707 Third Street, Suite 4-105
West Sacramento, California 95605

NM&R
NICHOLS MELBURG & ROSSETTO
ARCHITECTS + ENGINEERS
300 Knollcrest Drive
Redding, CA. 96002
(530) 222-3300 (530) 222-3538 FAX
http://www.nmrdesign.com

Copyright © 2021
All ideas, designs, arrangements and plans indicated or represented by this drawing are owned by, and the property of, NICHOLS, MELBURG and ROSSETTO and were created, evolved and developed for use on, and in conjunction with, the specified project. None of such ideas, designs, arrangements or plans shall be used by, or disclosed to any person, firm or corporation for any purpose whatsoever without the written permission of NICHOLS, MELBURG and ROSSETTO.

LICENSE STAMPS
LICENSED ARCHITECT KYLE MATTI C 27504 REN. 10/31/21 STATE OF CALIFORNIA

CONSULTANT

DRAWING STATUS
CONSTRUCTION DOCUMENTS

ISSUE

No.	Date	Description
1	10/22/2020	INITIAL PLAN REVIEW
2	01/08/2021	AGENCY RESUBMITTAL
3	03/22/2021	AGENCY RESUBMITTAL

If drawing is not 30" x 42" it is a reduced print

PROJECT
RESIDENTIAL CENTER, UKIAH: REPLACEMENT OF EXISTING RESIDENTIAL CENTER
440 EAST HILL ROAD
WILLITS, CALIFORNIA, 95490
MENDOCINO COUNTY
CALIFORNIA CONSERVATION CORPS

Supervisor	Designed	Drawn
KJM	DMH	DMH

DSA Application No.
02-118630

SHEET TITLE
ENLARGED SITE PLAN - WEST

DGS Project Number 000000000001826
NMR Project Number 18-6456
Reference North
Sheet Scale 1" = 20'-0"
Sheet Number A033
ISSUE DATE July 9, 2021

REFERENCE NORTH TRUE NORTH

ENLARGED SITE PLAN - WEST

SCALE: 1" = 20'-0"

0' 10' 20' 40' 80'

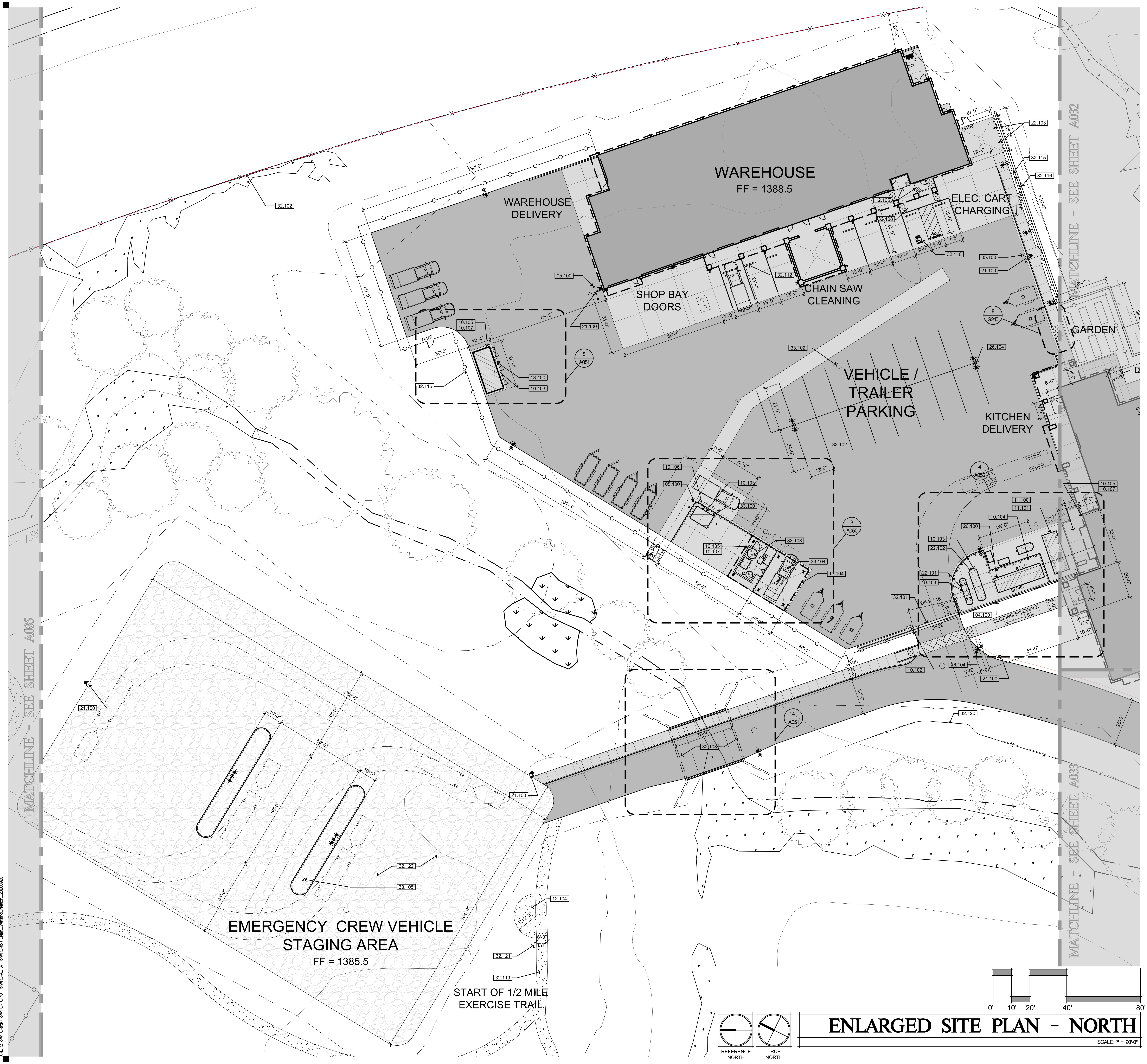

ENLARGED SITE PLAN - NORTH

SCALE: 1" = 20'-0"

KEYNOTES

04.100	8x8x16 CMU UTILITY YARD ENCLOSURE, SEE DETAIL 1/A060
05.100	STEEL PIPE BOLLARD, SEE DETAIL 5/A061
10.102	FIRE DEPARTMENT EMERGENCY KEY ACCESS (KNOX BOX)
10.103	"NO SMOKING WITHIN 25 FEET" SIGN PER CFC 5003.7.1, SIMILAR TO SIGN TYPE 'M' ON SHEET A965
10.104	"NO SMOKING WITHIN 25 FEET" SIGN PER CFC 5003.7.1, SIMILAR TO SIGN TYPE 'M' ON SHEET A965
10.105	"FIRE EXTINGUISHER" SIGN, SEE SIGN TYPE 'N' ON SHEET A965
10.106	NFPA 704 PLACARD SIGN, SEE SIGN TYPE 'O' ON SHEET A965
10.107	FIRE EXTINGUISHER, PROVIDE OUTDOOR CABINET MOUNTED TO UNISTRUT FRAME AND ANCHORED TO CONCRETE. CATO CHIEF CABINET, OR EQUAL.
11.100	COMPOSTER - VERTAL CITYPOD S, OR EQUAL. SIZE 4'-3" x 10'-0" x 4'-4"
11.101	COMPACTOR - MARATHON RAMJET RJ-88SC, OR EQUAL. 20 CU. YD. CAPACITY WITH REMOTE POWER PACK. SIZE 8'-4" x 20'-5" x 8'-8"
12.104	OUTDOOR PARK FITNESS STATION. EACH STATION TO INCLUDE TWO FITNESS EQUIPMENT UNITS
12.105	EXTERIOR ENTRANCE MAT WITH RECESSED METAL FRAME, SEE DETAIL 16/A060
13.100	3-ROOM, NON-RATED PRE-MANUFACTURED HAZMAT STORAGE BUILDING - US CHEMICAL CHEMLOC, OR EQUAL. SIZE 10' x 24' x 9'. SEE DETAILS ON SHEET A062
13.104	PREFABRICATED METAL CARPORT SYSTEM, SEE 10/A060
21.100	FIRE HYDRANT, SEE CIVIL
22.101	PROPANE TANK, 1,250 GALLONS (MP BUILDING KITCHEN). SEE PLUMBING DRAWINGS
22.102	PROPANE TANK, 2,000 GALLONS (EMERGENCY GENERATOR). SEE PLUMBING DRAWINGS
22.103	BOOT WASH, SEE DETAIL PLUMBING DRAWINGS & 11/A060
26.100	PROPANE-FUELED EMERGENCY GENERATOR. SEE ELECTRICAL DRAWINGS
26.104	POLE-MOUNTED SITE LIGHT, SEE ELECTRICAL DRAWINGS
32.100	BLACK VINYL COATED CHAIN LINK FENCE, 6' HIGH, SEE DETAIL 13/A061
32.101	ROLLING CHAIN LINK VEHICLE GATE, MANUAL OPERATION, SEE DETAIL 3/A061
32.102	EXISTING BARBED WIRE FENCE TO REMAIN, APPROXIMATELY 4' HIGH
32.103	PRECAST CONCRETE VEHICULAR BRIDGE BY ECOSPAN, OR EQUAL. 32' SPAN, 30' WIDTH, PRECAST CONCRETE ABUTMENTS WITH WING WALLS, SEE DETAILS ON SHEET A063
32.108	ACCESSIBLE PARKING SIGN AND POST, SEE DETAIL 5/G210
32.110	ACCESSIBLE PARKING STALLS, SEE DETAIL 1/G210
32.115	BLACK VINYL COATED CHAIN LINK FENCE, 6' HIGH WITH PRIVACY SLATS, SEE DETAIL 13/A061
32.116	STACKED STONE RETAINING WALL, SEE DETAIL 19/A064
32.119	DECOMPOSED GRANITE EXERCISE TRAIL, SEE LANDSCAPE DRAWINGS
32.120	CEDAR SPLIT RAIL FENCE, SEE DETAIL 16/A061
32.121	WETLANDS EDUCATIONAL KIOSK, SEE DETAIL 17/A061
32.122	COMPACTED AGGREGATE BASE SURFACE
33.100	ABOVEGROUND DUAL FUEL TANK, 2000 GALLON CAPACITY (1000 GAL. GASOLINE, 1000 GAL. DIESEL). SEE CIVIL CONST. DETAILS FOR PAD AND PLUMBING FOR TANK INFO
33.102	SANITARY SEWER MANHOLE
33.103	WATER TREATMENT SYSTEM, WATERMAZE CLP-5024 OR EQUAL, SEE DETAILS 9/A064 10/A064
33.104	VEHICLE WASH AREA
33.105	SEWER SYSTEM CONTROL PANEL, ATTACH TO UNI-STRUT SYSTEM ANCHORED IN CONCRETE FOOTING, PROVIDE CONNECTIONS TO PANEL AS REQUIRED

LEGEND

- SETBACK
- GRADING LIMITS AND EROSION CONTROL BOUNDARY
- REINFORCED CONCRETE WALK, SEE CIVIL DRAWINGS AND DETAILS 12/A060 20/A060 BROOM FINISH
- AC PAVING O/ AGGREGATE BASE, SEE CIVIL DRAWINGS
- STAMPED CONCRETE PAVING O/ AGGREGATE BASE, SEE CIVIL DRAWINGS
- TRAFFIC-RATED CONCRETE PAVER, SEE DETAIL 14/A061
- EXISTING WETLANDS AREA TO BE PROTECTED, SEE ENVIRONMENTAL PERMITS
- NEW MITIGATION WETLANDS AREA, SEE LANDSCAPE DRAWINGS AND ENVIRONMENTAL PERMITS
- EXISTING TREE TO REMAIN

KEY PLAN

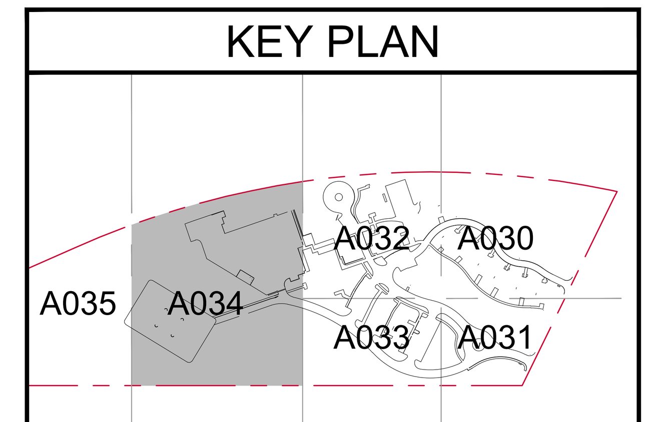

IDENTIFICATION STAMP
DIV. OF THE STATE ARCHITECT
APP: 02-118630 INC:
REVIEWED FOR
SS ☐ FLS ☐ ACS ☑
DATE: 04/13/2021

OFFICE OF THE STATE FIRE MARSHAL
APPROVED FIRE AND PANIC ONLY
Approval of this plan does not authorize or approve any omission or deviation from applicable regulations. Final approval is subject to field inspection. One set of approved plans shall be available on the project site at all times.
PERMIT NO.: 20-N-2332-CP
REVIEWED BY: LITO CATAYLO, OSFM
DATE: 4/1/2021

GENERAL SERVICES
Department of General Services
State of California
Real Estate Services Division
Project Management & Development Branch
707 Third Street, Suite 4-105
West Sacramento, California 95605

NICHOLS MELBURG & ROSSETTO
ARCHITECTS + ENGINEERS
300 Knollcrest Drive
Redding, CA. 96002
(530) 222-3300 (530) 222-3538 FAX
http://www.nmrdesign.com

Copyright © 2021
All ideas, designs, arrangements and plans indicated or represented by this drawing are owned by, and the property of, NICHOLS, MELBURG and ROSSETTO and were created, evolved and developed for use on, and in conjunction with, the specified project. None of such ideas, designs, arrangements or plans shall be used by, or disclosed to any person, firm or corporation for any purpose whatsoever without the written permission of NICHOLS, MELBURG and ROSSETTO.

LICENSE STAMPS
LICENSED ARCHITECT
KYLE MATTI
C 27504
REN. 10/31/21
STATE OF CALIFORNIA

CONSULTANT

DRAWING STATUS
CONSTRUCTION DOCUMENTS

ISSUE

No.	Date	Description
1	10/22/2020	INITIAL PLAN REVIEW
2	01/08/2021	AGENCY RESUBMITTAL
3	03/22/2021	AGENCY RESUBMITTAL

If drawing is not 30" x 42" it is a reduced print

PROJECT
RESIDENTIAL CENTER, UKIAH: REPLACEMENT OF EXISTING RESIDENTIAL CENTER
440 EAST HILL ROAD
WILLITS, CALIFORNIA, 95490
MENDOCINO COUNTY
CALIFORNIA CONSERVATION CORPS

Supervisor	Designed	Drawn
KJM	DMH	DMH

DSA Application No.
02-118630

SHEET TITLE
ENLARGED SITE PLAN - NORTH

DGS Project Number: 000000000001826
NMR Project Number: 18-6456

Reference North: NORTH
Sheet Scale: 1" = 20'-0"
Sheet Number: A034

ISSUE DATE
July 9, 2021

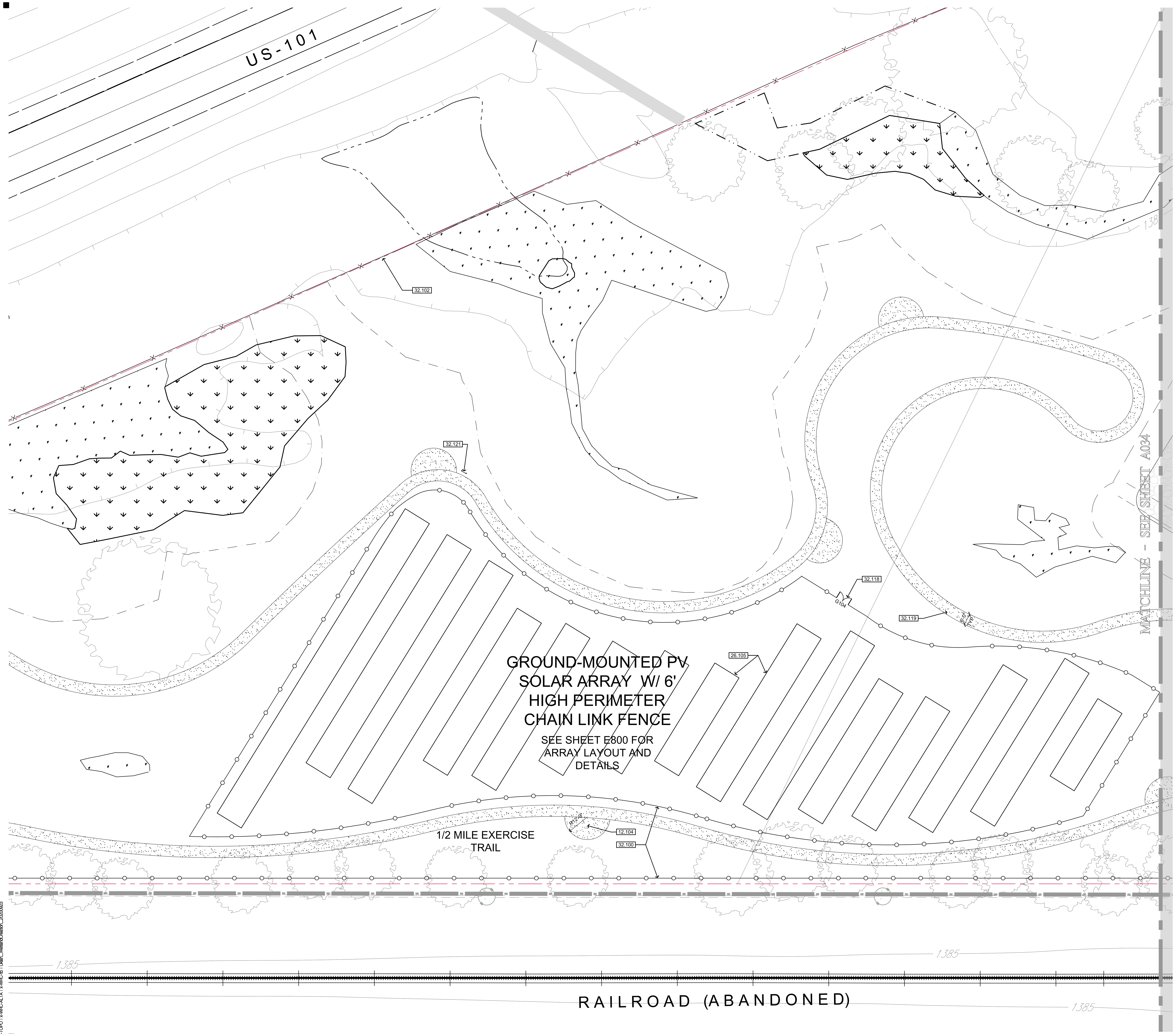

ENLARGED SITE PLAN - PV ARRAY

SCALE: 1" = 20'-0"

0' 10' 20' 40' 80'

REFERENCE NORTH

TRUE NORTH

KEYNOTES

12.104	OUTDOOR PARK FITNESS STATION. EACH STATION TO INCLUDE TWO FITNESS EQUIPMENT UNITS
26.105	PV ARRAY ON GROUND-MOUNTED RACK - SEE ELECTRICAL DRAWINGS
32.100	BLACK VINYL COATED CHAIN LINK FENCE, 6' HIGH, SEE DETAIL 13/A061
32.102	EXISTING BARBED WIRE FENCE TO REMAIN, APPROXIMATELY 4' HIGH
32.118	DOUBLE CHAIN LINK GATE, SEE DETAIL 15/A061
32.119	DECOMPOSED GRANITE EXERCISE TRAIL, SEE LANDSCAPE DRAWINGS
32.121	WETLANDS EDUCATIONAL KIOSK, SEE DETAIL 17/A061

LEGEND

- ELEC — EXISTING OVERHEAD PG&E POWER LINE
- SETBACK
- GRADING LIMITS AND EROSION CONTROL BOUNDARY
- REINFORCED CONCRETE WALK, SEE CIVIL DRAWINGS AND DETAILS 12/A060, 20/A060 BROOM FINISH
- AC PAVING O/ AGGREGATE BASE, SEE CIVIL DRAWINGS
- STAMPED CONCRETE PAVING O/ AGGREGATE BASE, SEE CIVIL DRAWINGS
- TRAFFIC-RATED CONCRETE PAVER, SEE DETAIL 14/A061
- EXISTING WETLANDS AREA TO BE PROTECTED, SEE ENVIRONMENTAL PERMITS
- NEW MITIGATION WETLANDS AREA, SEE LANDSCAPE DRAWINGS AND ENVIRONMENTAL PERMITS
- EXISTING TREE TO REMAIN

KEY PLAN

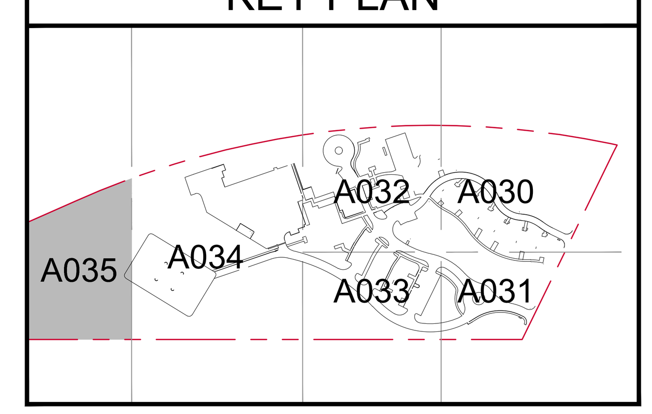

IDENTIFICATION STAMP
DIV. OF THE STATE ARCHITECT
APP: 02-118630 INC:
REVIEWED FOR
SS ☐ FLS ☐ ACS ☑
DATE: 04/13/2021

OFFICE OF THE STATE FIRE MARSHAL
APPROVED FIRE AND PANIC ONLY
Approval of this plan does not authorize or approve any omission or deviation from applicable regulations. Final approval is subject to field inspection. One set of approved plans shall be available on the project site at all times.
PERMIT NO.: 20-N-2332-CP
REVIEWED BY: LITO CATAYLO, OSFM
DATE: 4/1/2021

GENERAL SERVICES
Department of General Services
State of California
Real Estate Services Division
Project Management & Development Branch
707 Third Street, Suite 4-105
West Sacramento, California 95605

NICHOLS MELBURG & ROSSETTO
ARCHITECTS + ENGINEERS
300 Knollcrest Drive
Redding, CA. 96002
(530) 222-3300 (530) 222-3538 FAX
http://www.nmrdesign.com

Copyright © 2021
All ideas, designs, arrangements and plans indicated or represented by this drawing are owned by, and the property of, NICHOLS, MELBURG and ROSSETTO and were created, evolved and developed for use on, and in conjunction with, the specified project. None of such ideas, designs, arrangements or plans shall be used by, or disclosed to any person, firm or corporation for any purpose whatsoever without the written permission of NICHOLS, MELBURG and ROSSETTO.

LICENSE STAMPS
LICENSED ARCHITECT
KYLE MATTI
C 27504
REN. 10/31/21
STATE OF CALIFORNIA

CONSULTANT

DRAWING STATUS
CONSTRUCTION DOCUMENTS

ISSUE

No.	Date	Description
1	10/22/2020	INITIAL PLAN REVIEW
2	01/08/2021	AGENCY RESUBMITTAL
3	03/22/2021	AGENCY RESUBMITTAL

If drawing is not 30" x 42" it is a reduced print

PROJECT
RESIDENTIAL CENTER, UKIAH: REPLACEMENT OF EXISTING RESIDENTIAL CENTER
440 EAST HILL ROAD
WILLITS, CALIFORNIA, 95490
MENDOCINO COUNTY
CALIFORNIA CONSERVATION CORPS

Supervisor	Designed	Drawn
KJM	DMH	DMH

DSA Application No.
02-118630

SHEET TITLE
ENLARGED SITE PLAN - PV ARRAY

DGS Project Number 000000000001826
NMR Project Number 18-6456

Reference North: NORTH
Sheet Scale 1" = 20'-0"
Sheet Number A035

ISSUE DATE
July 9, 2021

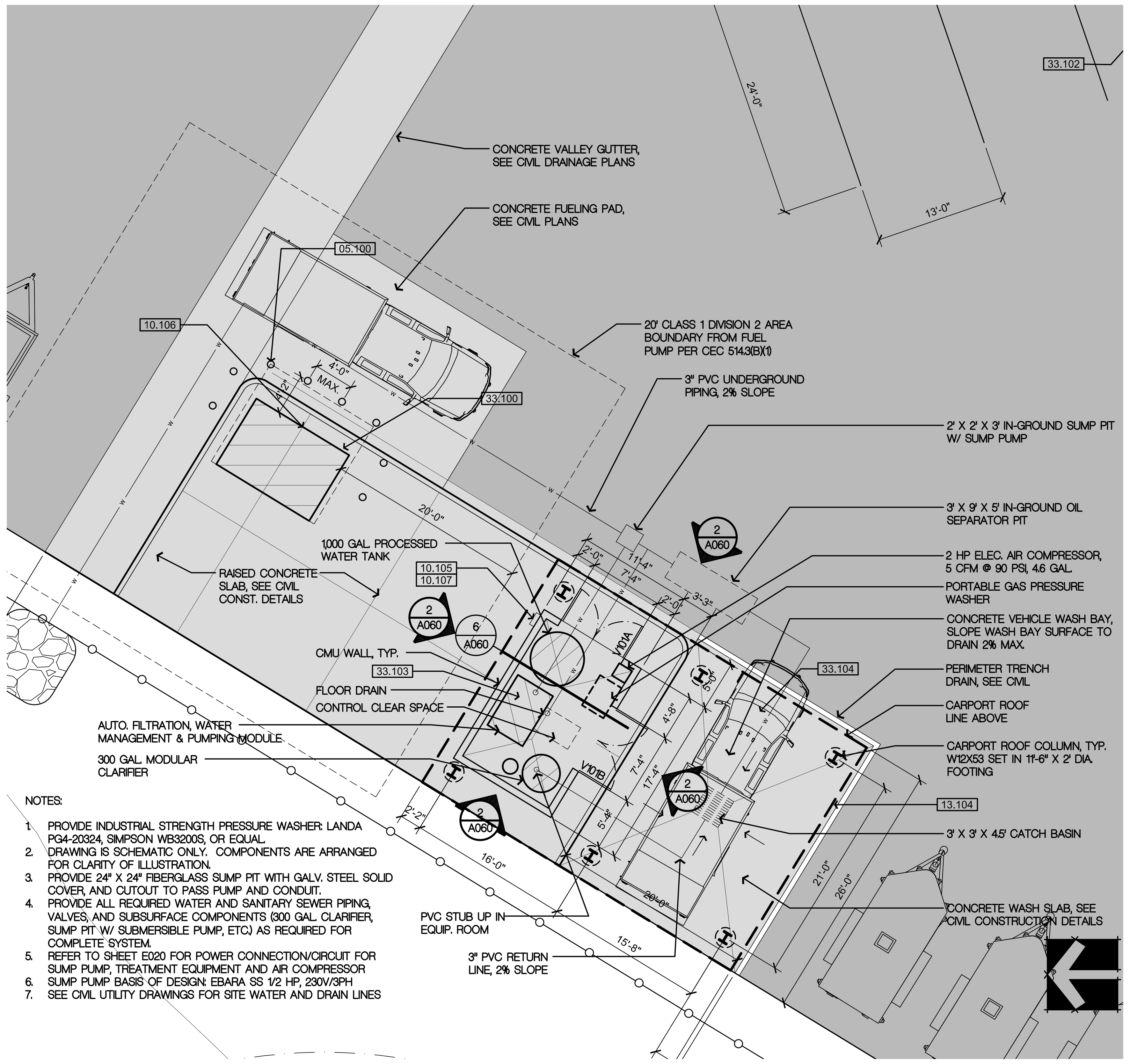

PARTIAL SITE PLAN - FUEL TANK & VEHICLE WASH AREA (3) SCALE: 1/8"=1'-0"

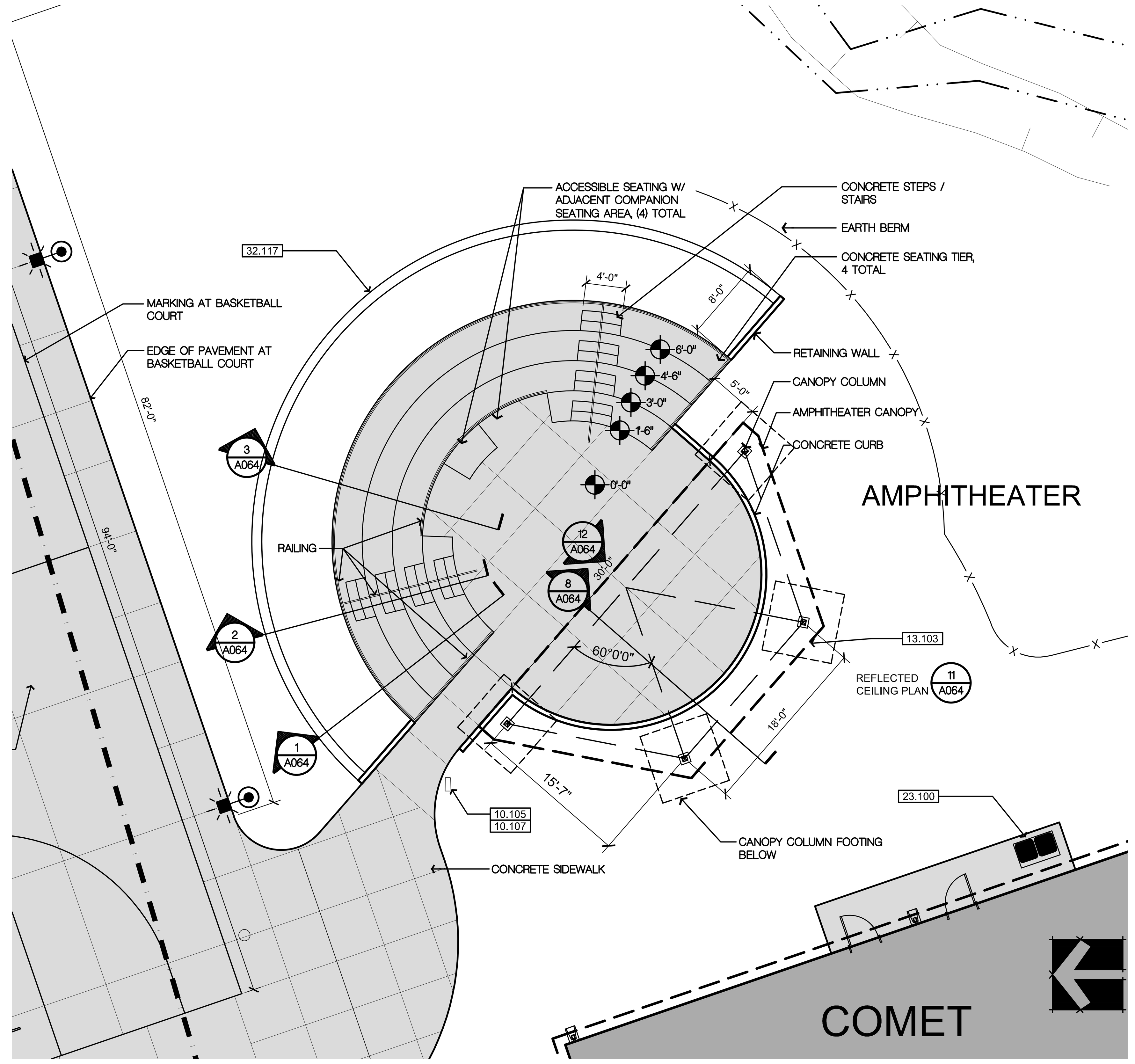

PARTIAL SITE PLAN - AMPHITHEATER (1) SCALE: 1/8"=1'-0"

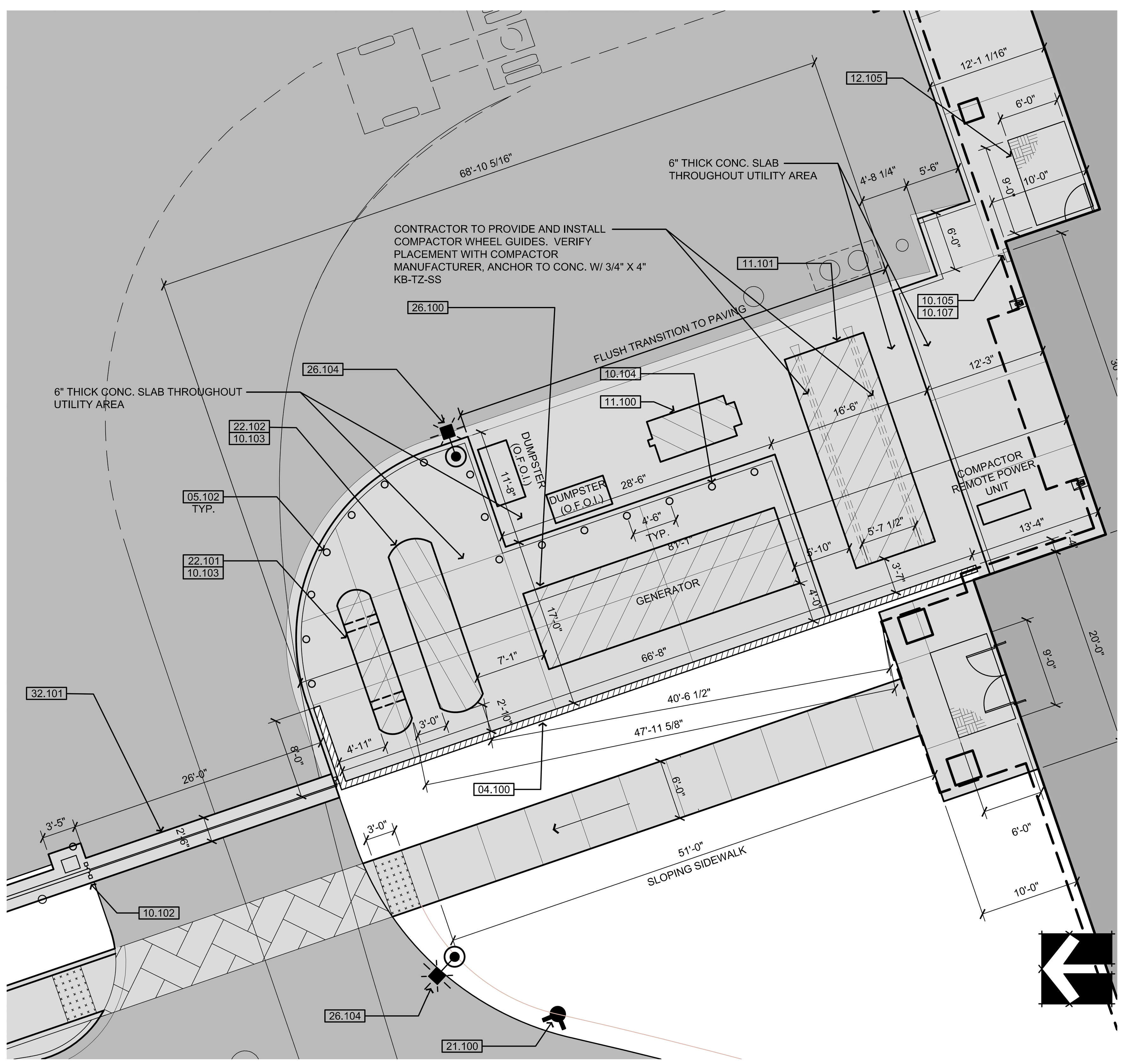

PARTIAL SITE PLAN - UTILITY AREA (4) SCALE: 1/8"=1'-0"

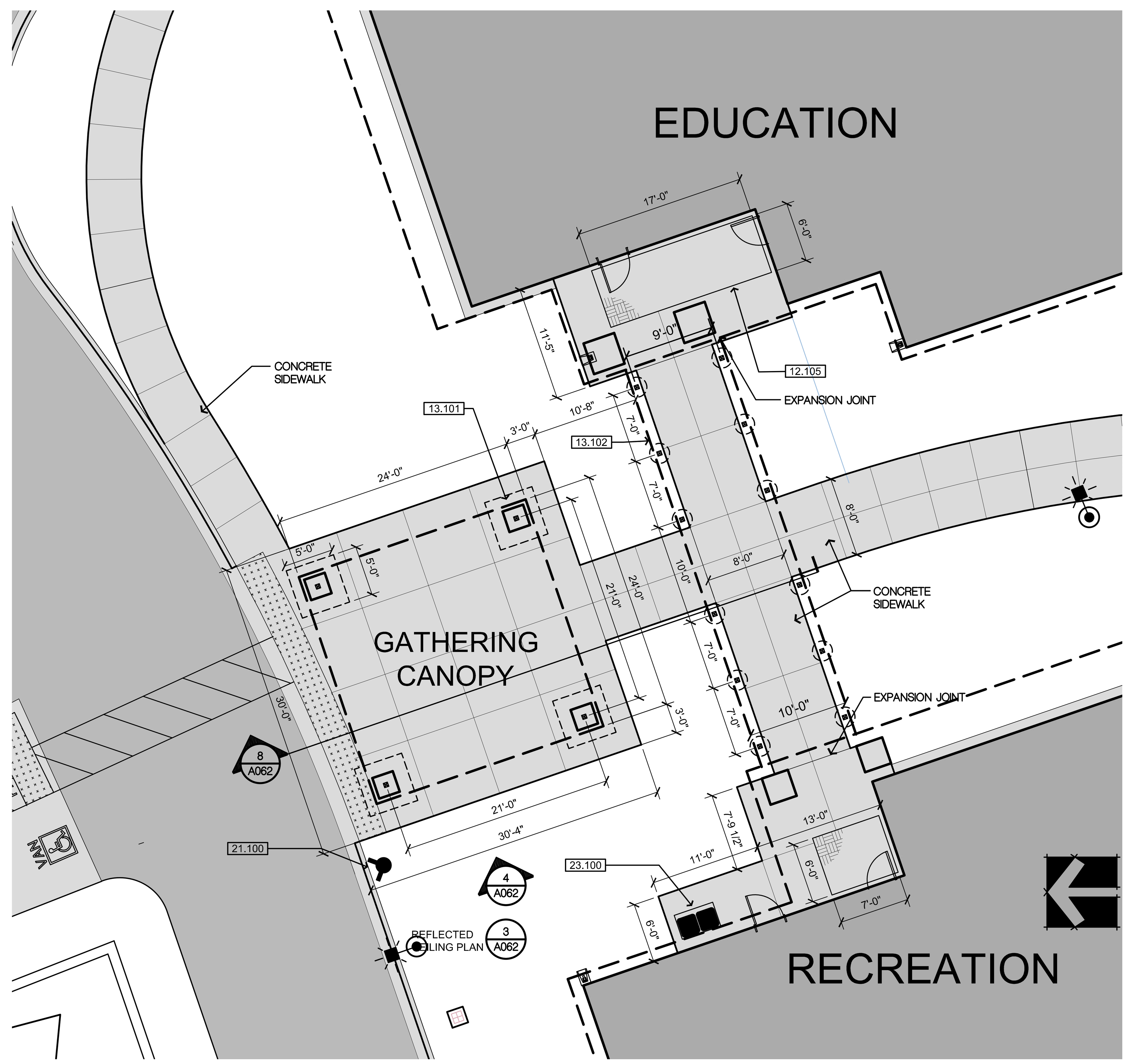

PARTIAL SITE PLAN - GATHERING AREA (2) SCALE: 1/8"=1'-0"

KEYNOTES

04.100 8x8x16 CMU UTILITY YARD ENCLOSURE, SEE DETAIL 1/A060
05.100 STEEL PIPE BOLLARD, SEE DETAIL 5/A061
05.102 REMOVABLE STEEL PIPE BOLLARD, SEE DETAIL 10/A062
10.102 FIRE DEPARTMENT EMERGENCY KEY ACCESS (KNOX BOX)
10.103 "NO SMOKING WITHIN 25 FEET" SIGN PER CFC 5003.7.1, SIMILAR TO SIGN TYPE 'M' ON SHEET A965
10.104 "NO SMOKING WITHIN 25 FEET" SIGN PER CFC 5003.7.1, SIMILAR TO SIGN TYPE 'M' ON SHEET A965
10.105 "FIRE EXTINGUISHER" SIGN, SEE SIGN TYPE 'N' ON SHEET A965
10.106 NFPA 704 PLACARD SIGN, SEE SIGN TYPE 'O' ON SHEET A965
10.107 FIRE EXTINGUISHER, PROVIDE OUTDOOR CABINET MOUNTED TO UNISTRUT FRAME AND ANCHORED TO CONCRETE. CATO CHIEF CABINET, OR EQUAL.
11.100 COMPOSTER - VERTAL CITYPOD S, OR EQUAL. SIZE 4'-3" x 10'-0" x 4'-4"
11.101 COMPACTOR - MARATHON RAMJET RJ-88SC, OR EQUAL. 20 CU. YD. CAPACITY WITH REMOTE POWER PACK. SIZE 8'-4" x 20'-5" x 8'-8"
12.103 BIKE LOCKER
12.105 EXTERIOR ENTRANCE MAT WITH RECESSED METAL FRAME, SEE DETAIL 16/A060
13.101 PREFABRICATED STEEL GATHERING CANOPY
13.102 PREFABRICATED STEEL COVERED WALKWAY CANOPY
13.103 PREFABRICATED STEEL AMPHITHEATER CANOPY
13.104 PREFABRICATED METAL CARPORT SYSTEM, SEE 10/A060
21.100 FIRE HYDRANT, SEE CIVIL
22.101 PROPANE TANK, 1,250 GALLONS (MP BUILDING KITCHEN). SEE PLUMBING DRAWINGS
22.102 PROPANE TANK, 2,000 GALLONS (GENERATOR). SEE PLUMBING DRAWINGS
23.100 OUTDOOR MECHANICAL UNIT ON CONCRETE PAD - SEE MECHANICAL DRAWINGS
26.100 PROPANE-FUELED EMERGENCY GENERATOR, SEE ELECTRICAL DRAWINGS
26.104 POLE-MOUNTED SITE LIGHT, SEE ELECTRICAL DRAWINGS
32.100 BLACK VINYL COATED CHAIN LINK FENCE, 6' HIGH, SEE DETAIL 13/A061
32.101 ROLLING CHAIN LINK VEHICLE GATE, MANUAL OPERATION, 6' HIGH, SEE DETAIL 3/A061
32.102 EXISTING BARBED WIRE FENCE TO REMAIN, APPROXIMATELY 4' HIGH
32.105 BLACK METAL PICKET SWING GATE, 6' HIGH, MANUAL OPERATION, SEE DETAIL 4/A061
32.106 BLACK METAL PICKET FENCE, 6' HIGH, SEE DETAIL 2/A061
32.116 STACKED STONE RETAINING WALL, SEE DETAIL 19/A064
33.100 ABOVEGROUND DUAL FUEL TANK, 2000 GALLON CAPACITY (1000 GAL. GASOLINE, 1000 GAL. DIESEL). SEE CIVIL CONST. DETAILS FOR PAD AND PLUMBING FOR TANK INFO
33.102 SANITARY SEWER MANHOLE
33.103 WATER TREATMENT SYSTEM, WATERMAZE CLP-5024 OR EQUAL. SEE DETAILS 9/A064, 10/A064
33.104 VEHICLE WASH AREA

LEGEND

ELEC — EXISTING OVERHEAD PG&E POWER LINE
SETBACK
REINFORCED CONCRETE WALK, SEE CIVIL DRAWINGS AND DETAIL 9/G210
AC PAVING O/ AGGREGATE BASE, SEE CIVIL DRAWINGS
STAMPED CONCRETE PAVING O/ AGGREGATE BASE, SEE CIVIL DRAWINGS
TRAFFIC-RATED CONCRETE PAVER, SEE DETAIL 14/A061
WETLANDS AREA
EXISTING TREE

KEY PLAN

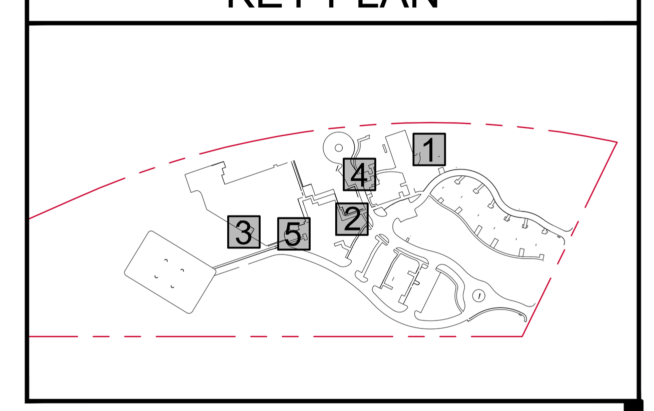

IDENTIFICATION STAMP
DIV. OF THE STATE ARCHITECT
APP: 02-118630 INC:
REVIEWED FOR
SS ☐ FLS ☐ ACS ☑
DATE: 04/13/2021

OFFICE OF THE STATE FIRE MARSHAL
APPROVED FIRE AND PANIC ONLY
Approval of this plan does not authorize or approve any omission or deviation from applicable regulations. Final approval is subject to field inspection. One set of approved plans shall be available on the project site at all times.
PERMIT NO.: 20-N-2332-CP
REVIEWED BY: LEO CATAYLO, OSFM
DATE: 4/1/2021

DGS GENERAL SERVICES
Department of General Services
State of California
Real Estate Services Division
Project Management & Development Branch
707 Third Street, Suite 4-105
West Sacramento, California 95605

NICHOLS MELBURG & ROSSETTO
ARCHITECTS + ENGINEERS
300 Knollcrest Drive
Redding, CA. 96002
(530) 222-3300 (530) 222-3538 FAX
http://www.nmrdesign.com

Copyright © 2021
All ideas, designs, arrangements and plans indicated or represented by this drawing are owned by, and the property of, NICHOLS, MELBURG and ROSSETTO and were created, evolved and developed for use on, and in conjunction with, the specified project. None of such ideas, designs, arrangements or plans shall be used by, or disclosed to any person, firm or corporation for any purpose whatsoever without the written permission of NICHOLS, MELBURG and ROSSETTO.

LICENSE STAMPS
LICENSED ARCHITECT KYLE MATTI C 27504 REN. 10/31/21 STATE OF CALIFORNIA

CONSULTANT

DRAWING STATUS
CONSTRUCTION DOCUMENTS

ISSUE

No.	Date	Description
1	10/22/2020	INITIAL PLAN REVIEW
2	01/08/2021	AGENCY RESUBMITTAL
3	03/22/2021	AGENCY RESUBMITTAL

If drawing is not 30" x 42" it is a reduced print

PROJECT
RESIDENTIAL CENTER, UKIAH: REPLACEMENT OF EXISTING RESIDENTIAL CENTER
440 EAST HILL ROAD
WILLITS, CALIFORNIA, 95490
MENDOCINO COUNTY
CALIFORNIA CONSERVATION CORPS

Supervisor	Designed	Drawn
KJM	DMH	DMH

DSA Application No. 02-118630

SHEET TITLE
PARTIAL SITE PLANS

DGS Project Number 0000000000001826
NMR Project Number 18-6456
Reference North
Sheet Scale 1" = 10'-0"
Sheet Number A050
ISSUE DATE July 9, 2021

Login Name: Daryn H.
Plot Date: March 24, 2021 - 1:06 pm
File Name: N:\Projects\6000\Ukiah\2018\18-6456 CCC Willits Residential Center\Drawings\WRC-site-partial.dwg

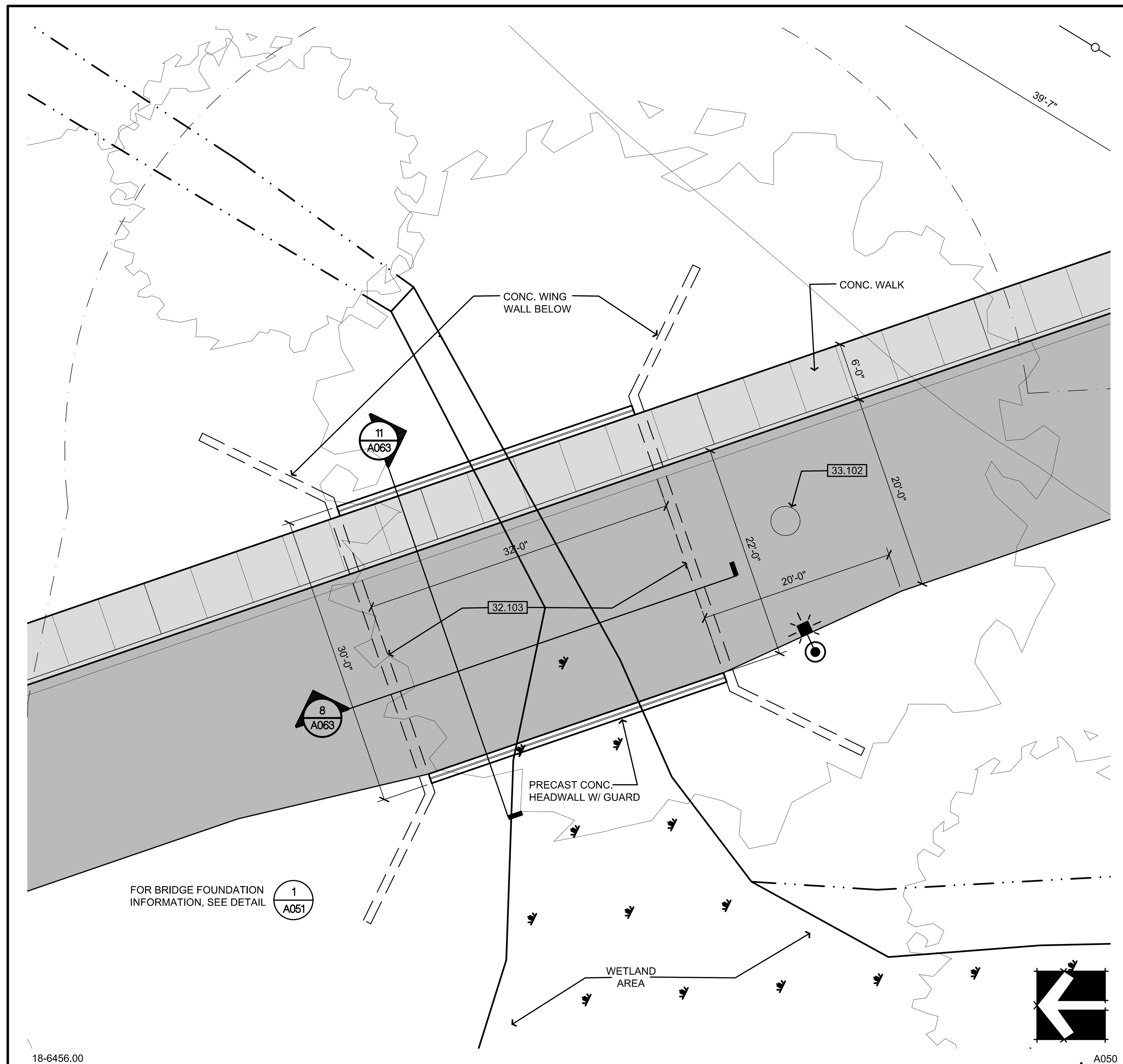

PARTIAL SITE PLAN - BRIDGE 4

SCALE: 1/8"=1'-0"

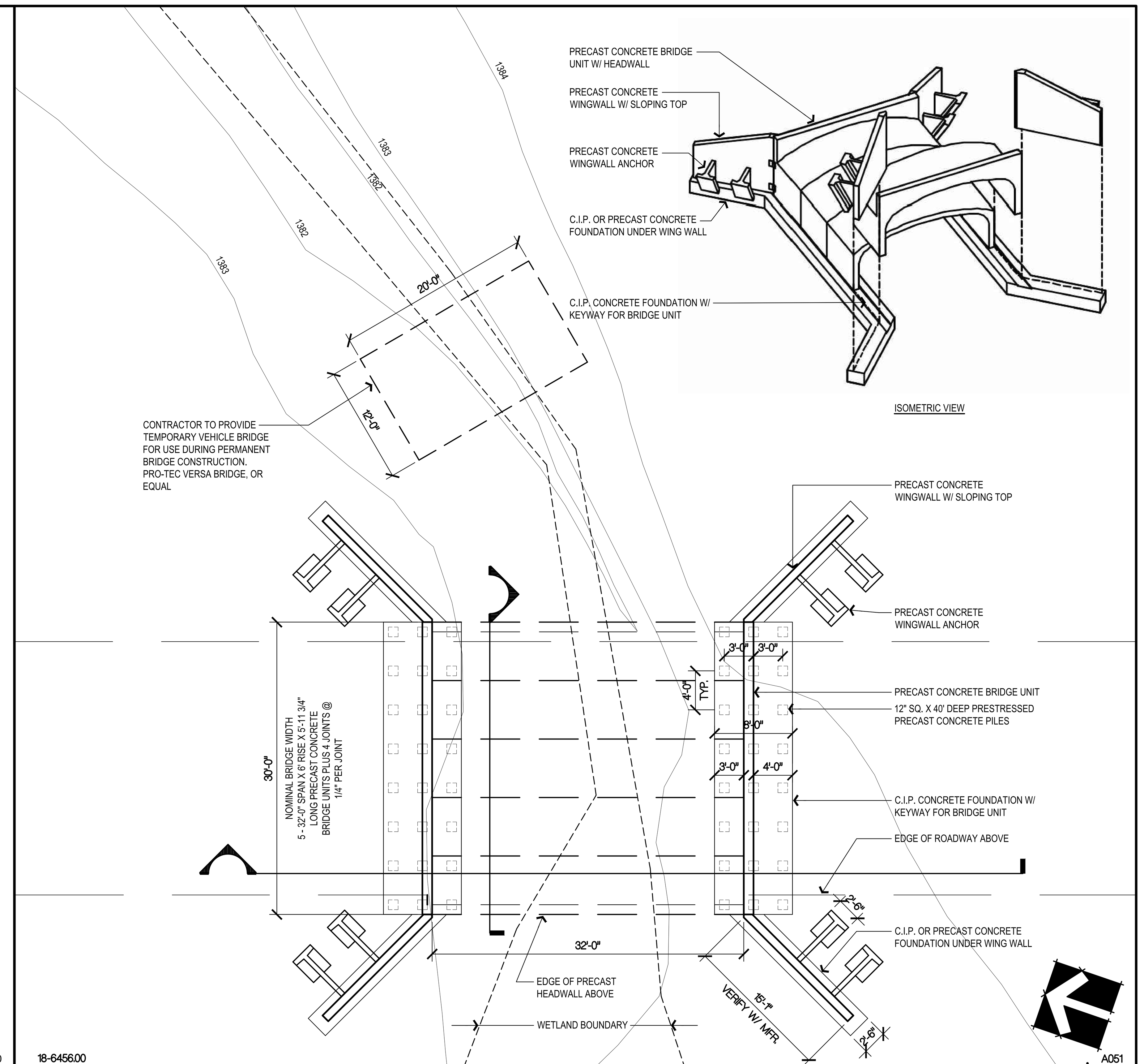

BRIDGE FOUNDATION PLAN 1

SCALE: 1/8"=1'-0"

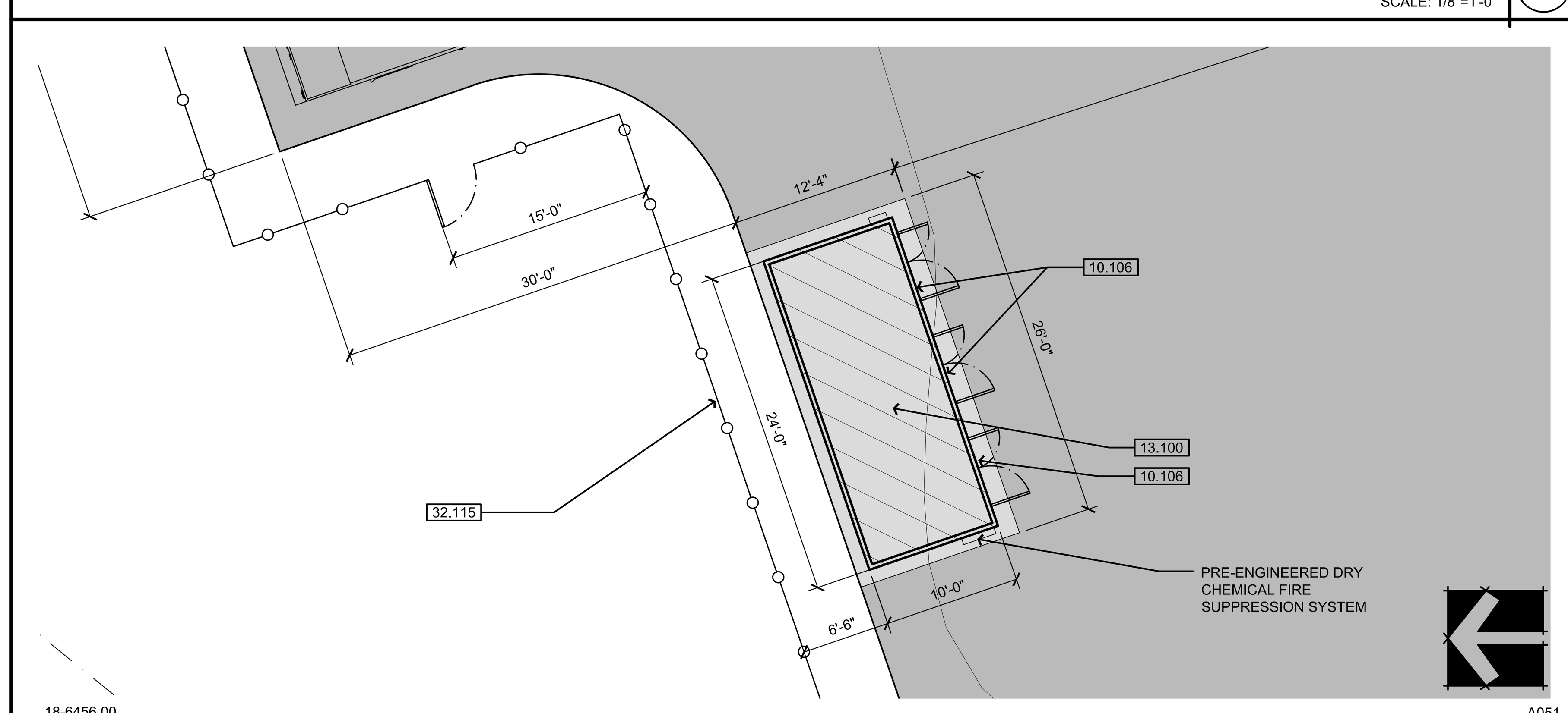

PARTIAL SITE PLAN - HAZMAT STORAGE STRUCTURE 5

SCALE: 1/8"=1'-0"

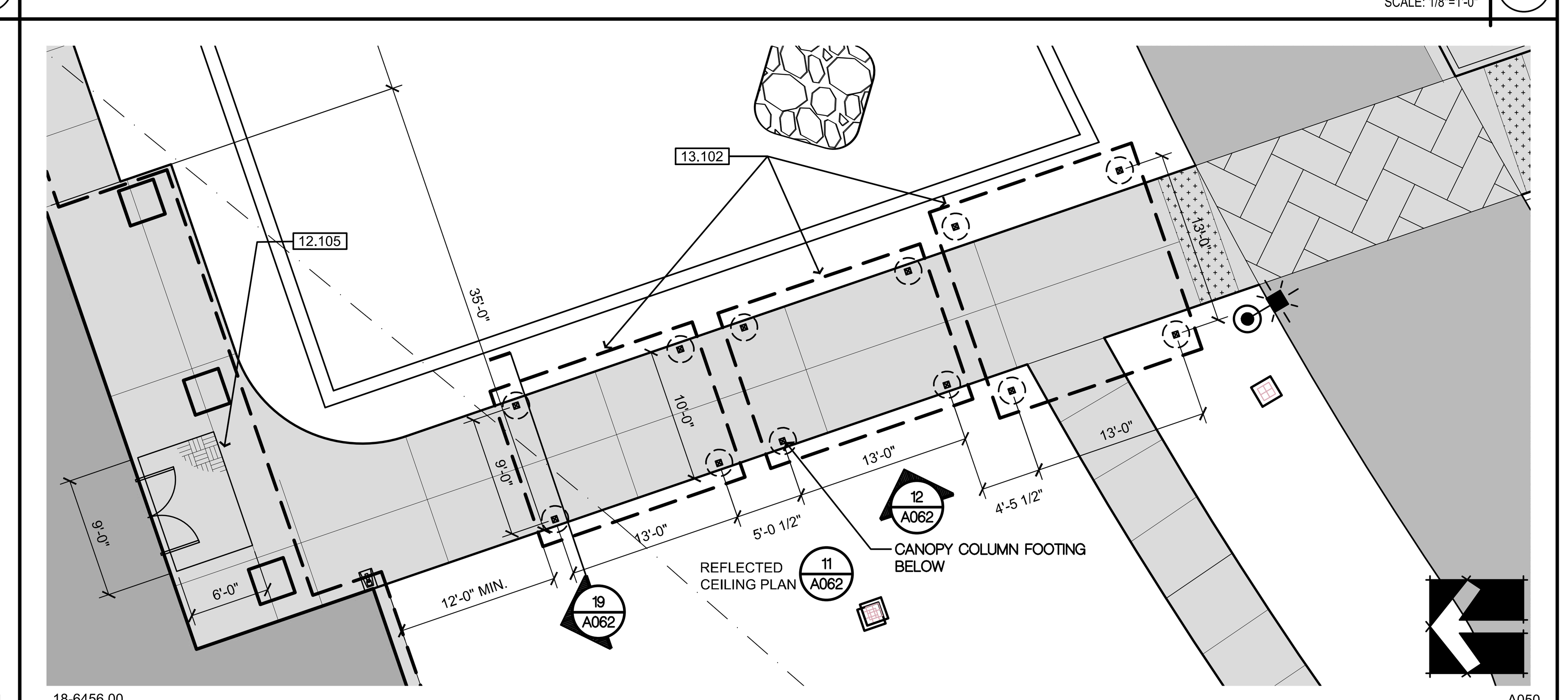

PARTIAL SITE PLAN - COVERED WALK 2

SCALE: 1/8"=1'-0"

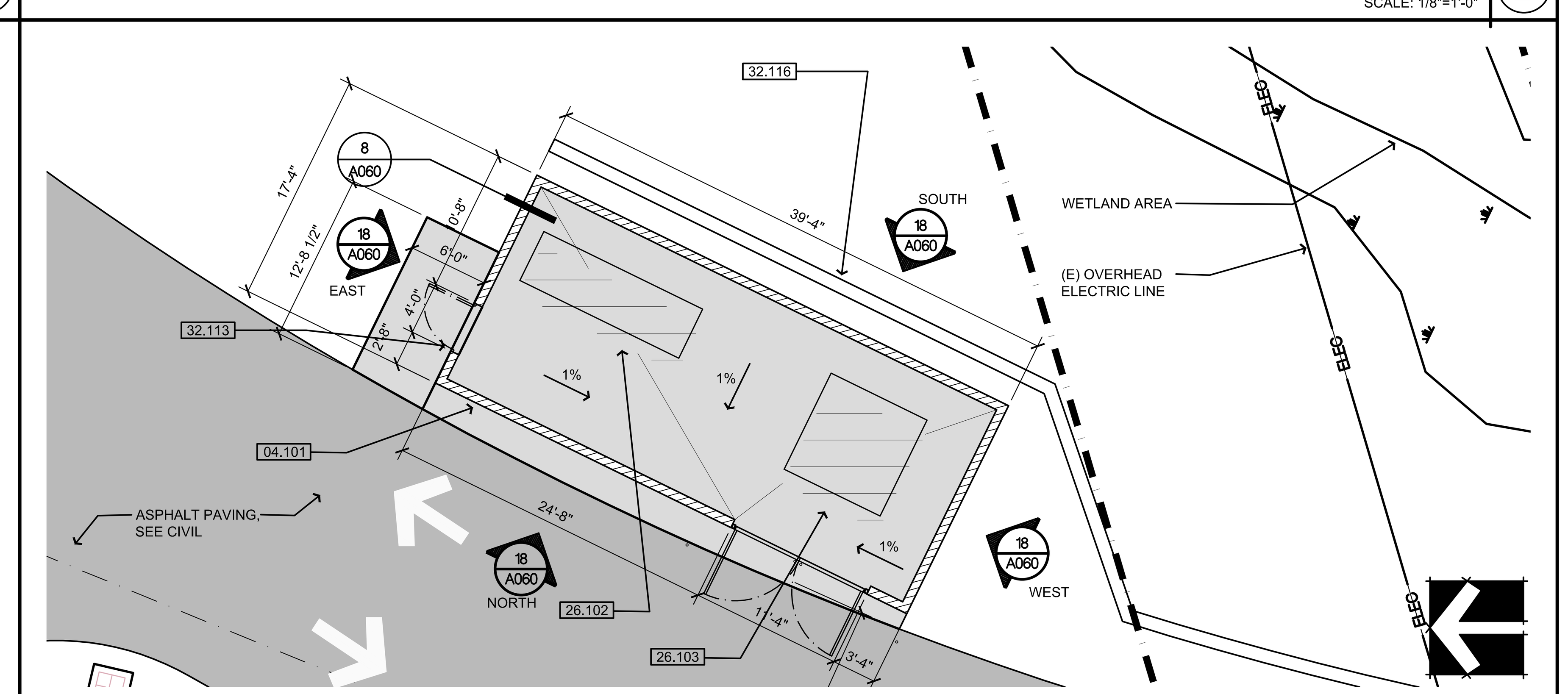

PARTIAL SITE PLAN - ELECTRIC ENCLOSURE 3

SCALE: 1/8"=1'-0"

KEYNOTES

04.101	8x8x16 CMU ELECTRIC GEAR ENCLOSURE, SEE DETAIL 8 A060
05.100	STEEL PIPE BOLLARD, SEE DETAIL 5 A061
10.103	"NO SMOKING WITHIN 25 FEET" SIGN PER CFC 5003.7.1, SIMILAR TO SIGN TYPE 'M' ON SHEET A965
10.105	"FIRE EXTINGUISHER" SIGN, SEE SIGN TYPE 'N' ON SHEET A965
10.106	NFPA 704 PLACARD SIGN, SEE SIGN TYPE 'O' ON SHEET A965
10.107	FIRE EXTINGUISHER, PROVIDE OUTDOOR CABINET MOUNTED TO UNISTRUT FRAME AND ANCHORED TO CONCRETE. CATO CHIEF CABINET, OR EQUAL.
13.102	PREFABRICATED STEEL COVERED WALKWAY CANOPY
26.102	MAIN ELECTRIC SWITCHGEAR - SEE ELECTRICAL DRAWINGS
26.103	ELECTRIC TRANSFORMER - SEE ELECTRICAL DRAWINGS
32.103	PRECAST CONCRETE VEHICULAR BRIDGE BY ECOSPAN, OR EQUAL. 32' SPAN, 30' WIDTH, PRECAST CONCRETE ABUTMENTS WITH WING WALLS, SEE DETAILS ON SHEET A063
32.113	CHAIN LINK GATE, SEE DETAIL 1 A061
32.115	BLACK VINYL COATED CHAIN LINK FENCE, 6' HIGH WITH PRIVACY SLATS, SEE DETAIL 13 A061
32.116	STACKED STONE RETAINING WALL, SEE DETAIL 19 A064
33.100	ABOVEGROUND DUAL FUEL TANK, 2000 GALLON CAPACITY (1000 GAL. GASOLINE, 1000 GAL. DIESEL). SEE CIVIL CONST. DETAILS FOR PAD AND PLUMBING FOR TANK INFO
33.102	SANITARY SEWER MANHOLE

LEGEND

ELEC	EXISTING OVERHEAD PG&E POWER LINE
	SETBACK
	REINFORCED CONCRETE WALK, SEE CIVIL DRAWINGS AND DETAIL 9 G210
	AC PAVING O/ AGGREGATE BASE, SEE CIVIL DRAWINGS
	STAMPED CONCRETE PAVING O/ AGGREGATE BASE, SEE CIVIL DRAWINGS
	TRAFFIC-RATED CONCRETE PAVER, SEE DETAIL 14 A061
	WETLANDS AREA
	EXISTING TREE

KEY PLAN

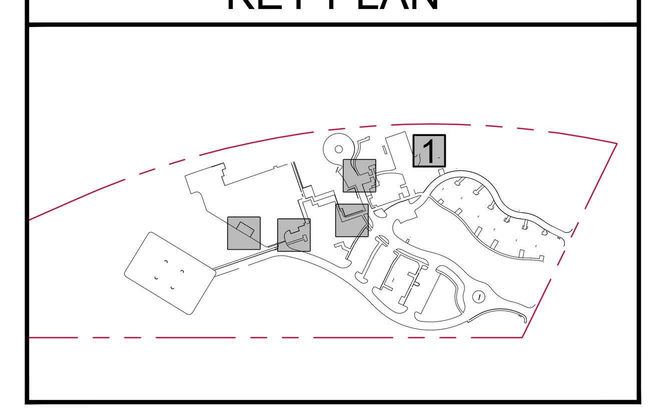

IDENTIFICATION STAMP
DIV. OF THE STATE ARCHITECT
APP: 02-118630 INC:
REVIEWED FOR
SS ☐ FLS ☐ ACS ☑
DATE: 04/13/2021

OFFICE OF THE STATE FIRE MARSHAL
APPROVED FIRE AND PANIC ONLY
Approval of this plan does not authorize or approve any omission or deviation from applicable regulations. Final approval is subject to field inspection. One set of approved plans shall be available on the project site at all times.
PERMIT NO.: 20-N-2332-CP
REVIEWED BY: LUO CATAYLO, OSFM
DATE: 4/ /2021

DGS
GENERAL SERVICES
Department of General Services
State of California
Real Estate Services Division
Project Management & Development Branch
707 Third Street, Suite 4-105
West Sacramento, California 95605

NM&R
NICHOLS MELBURG & ROSSETTO
ARCHITECTS + ENGINEERS
300 Knollcrest Drive
Redding, CA. 96002
(530) 222-3300 (530) 222-3538 FAX
http://www.nmrdesign.com

Copyright © 2021
All ideas, designs, arrangements and plans indicated or represented by this drawing are owned by, and the property of, NICHOLS, MELBURG and ROSSETTO and were created, evolved and developed for use on, and in conjunction with, the specified project. None of such ideas, designs, arrangements or plans shall be used by, or disclosed to any person, firm or corporation for any purpose whatsoever without the written permission of NICHOLS, MELBURG and ROSSETTO.

LICENSE STAMPS

LICENSED ARCHITECT
KYLE MATTI
C 27504
REN. 10/31/21
STATE OF CALIFORNIA

CONSULTANT

DRAWING STATUS
CONSTRUCTION DOCUMENTS

ISSUE

No.	Date	Description
1	10/22/2020	INITIAL PLAN REVIEW
2	01/08/2021	AGENCY RESUBMITTAL
3	03/22/2021	AGENCY RESUBMITTAL

If drawing is not 30" x 42" it is a reduced print

PROJECT
RESIDENTIAL CENTER, UKIAH: REPLACEMENT OF EXISTING RESIDENTIAL CENTER
440 EAST HILL ROAD
WILLITS, CALIFORNIA, 95490
MENDOCINO COUNTY
CALIFORNIA CONSERVATION CORPS

Supervisor	Designed	Drawn
KJM	DMH	DMH

DSA Application No.
02-118630

SHEET TITLE
PARTIAL SITE PLANS

DGS Project Number	NMR Project Number
000000000001826	18-6456

Reference North: NORTH
Sheet Scale: 1" = 10'-0"
Sheet Number: A051

ISSUE DATE
July 9, 2021

Login Name: Daryn H.
Plot Date: March 24, 2021 - 1:06 pm
File Name: N:\Projects\6000\Ukiah\2018\18-6456 CCC Willits Residential Center\Drawing\WRC-site-partial.dwg
XREFS: x-WRC-site | x-WRC-TOPO | x-WRC-ALTA | x-WRC-tb | bridge-plan | Ukiah_WetlandCreation_20200623

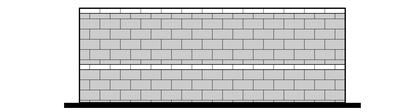

WEST ELEVATION

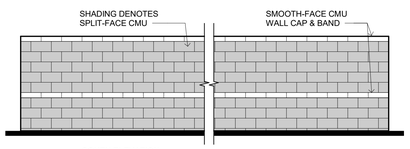

SOUTH ELEVATION

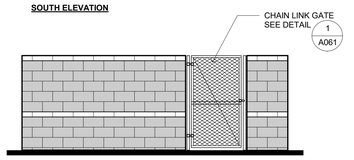

EAST ELEVATION

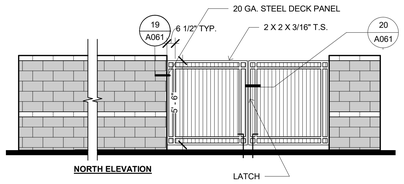

NORTH ELEVATION

A060

ELECTRIC GEAR ENCLOSURE ELEVATIONS

SCALE: 1/4" = 1'-0"

18

NOTES:

CARPORT STRUCTURE AND RELATED FOUNDATION IS PART OF A PRE-ENGINEERED SYSTEM.

CARPORT TO BE DESIGNED & ENGINEERED IN COMPLIANCE WITH LOCAL LOADING REQUIREMENTS. SEE STRUCTURAL DRAWINGS FOR PROJECT DESIGN LOADS.

CARPORT TO USE BOLTED CONNECTIONS ALLOWING FOR ON-SITE INSTALLATION.

STEEL MEMBERS TO BE GALVANIZED PER ASTM A653 WITH FACTORY BAKED ON PAINT FINISH.

SEE SPECIFICATIONS FOR ADDITIONAL INFORMATION.

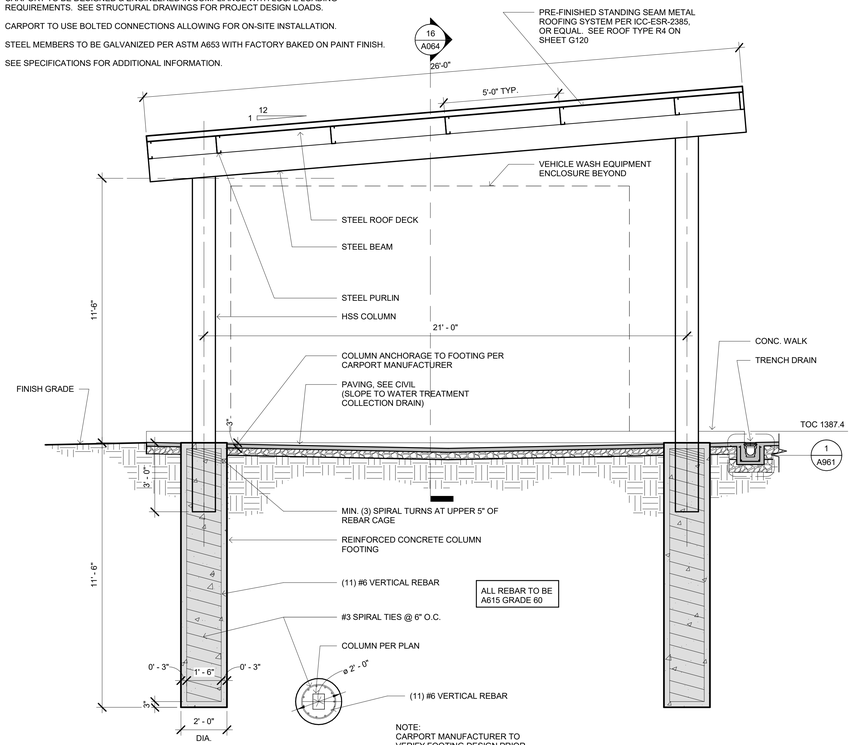

NOTE:
CARPORT MANUFACTURER TO VERIFY FOOTING DESIGN PRIOR TO CONSTRUCTION

A060

METAL CAR PORT SECTION

SCALE: 3/8" = 1'-0"

10

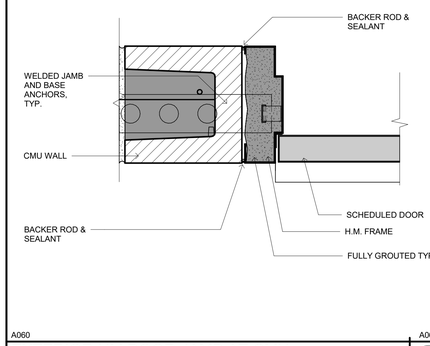

A060 A060

EXTERIOR HM DOOR JAMB AT CMU

SCALE: 3" = 1'-0"

5

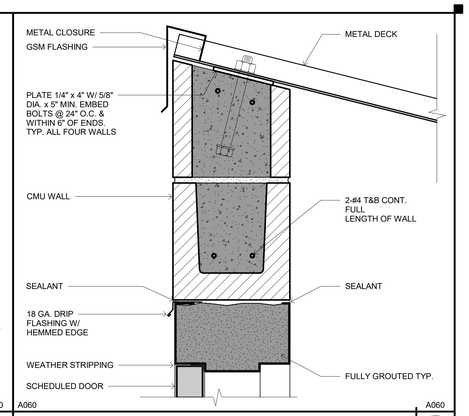

A060 A060

EXTERIOR HM DOOR HEAD AT CMU

SCALE: 3" = 1'-0"

1

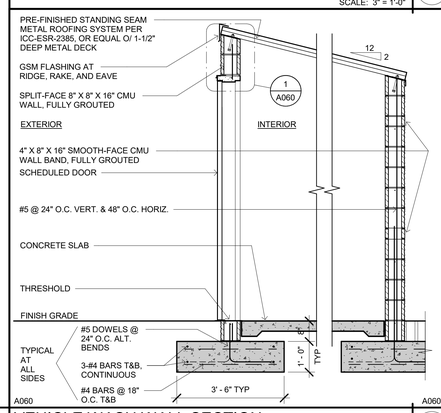

A060

VEHICLE WASH WALL SECTION

SCALE: 1/2" = 1'-0"

6

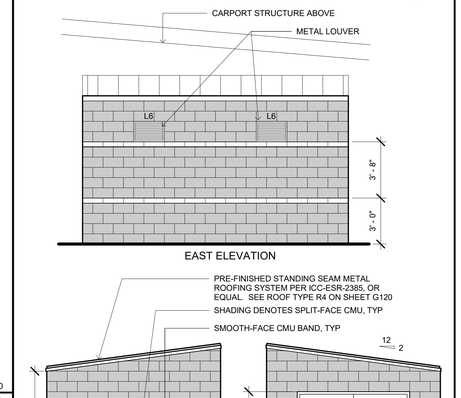

EAST ELEVATION

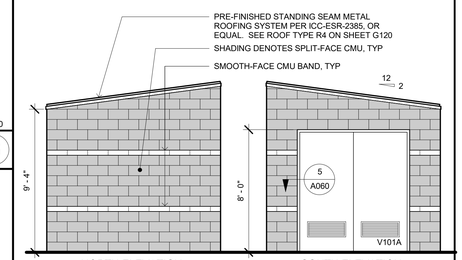

NORTH ELEVATION SOUTH ELEVATION

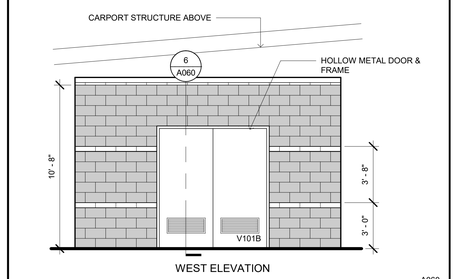

WEST ELEVATION

A060

VEHICLE WASH ELEVATIONS

SCALE: 1/4" = 1'-0"

2

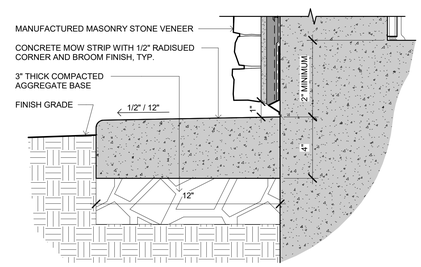

A060

CONCRETE MOW STRIP

SCALE: 3" = 1'-0"

19

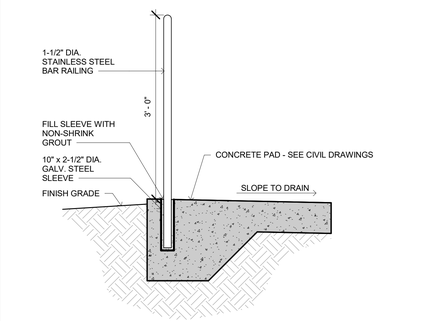

HANDRAIL SECTION

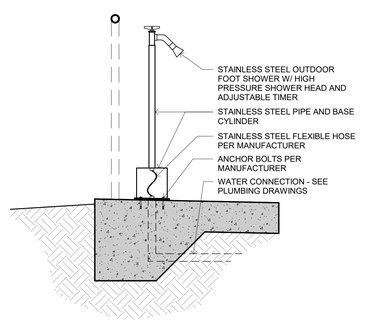

BOOT SHOWER SECTION

A060

BOOT WASH

SCALE: 1" = 1'-0"

11

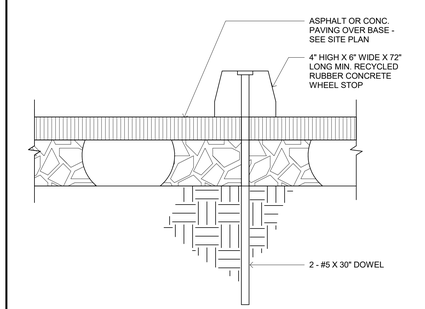

A060

WHEEL STOP

SCALE: 1 1/2" = 1'-0"

7

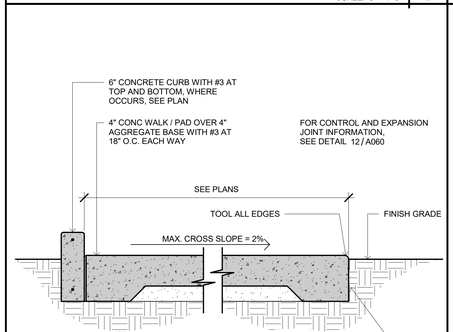

A060

CONCRETE WALKWAY OR PAD

SCALE: 3/4" = 1'-0"

20

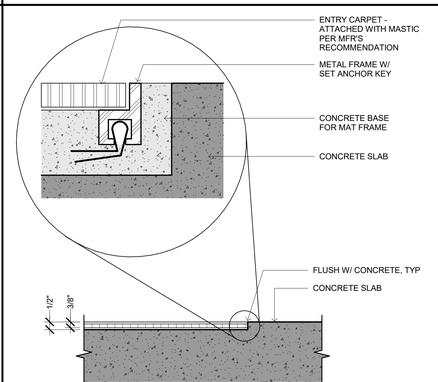

A060

RECESSED MAT AT CONCRETE

SCALE: 3" = 1'-0"

16

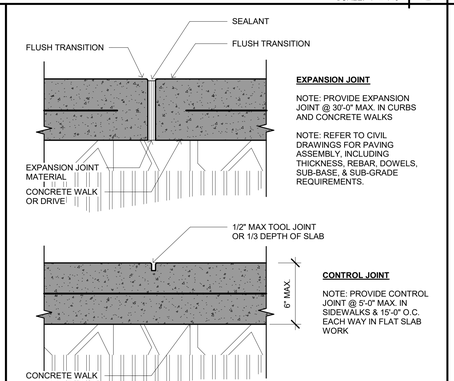

A060

TYPICAL CONCRETE JOINTS

SCALE: 3" = 1'-0"

12

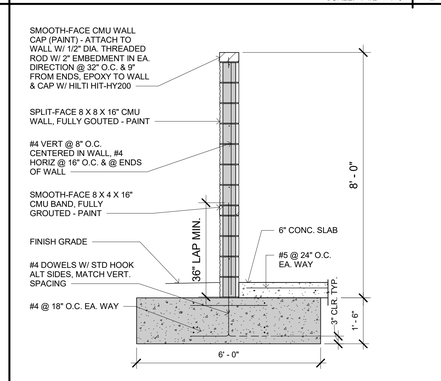

A060

CMU WALL SECTION

SCALE: 1/2" = 1'-0"

8

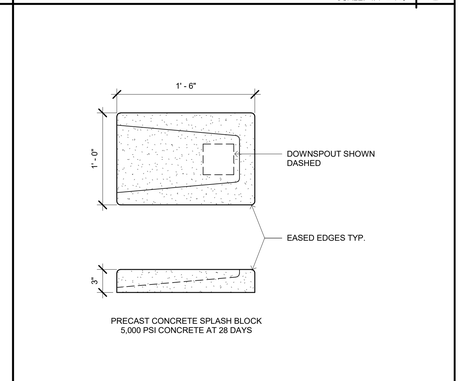

PRECAST CONCRETE SPLASH BLOCK
5,000 PSI CONCRETE AT 28 DAYS

A060

CONCRETE SPLASH BLOCK

SCALE: 1 1/2" = 1'-0"

4

IDENTIFICATION STAMP
DIV. OF THE STATE ARCHITECT
APP: 02-118630 INC:
REVIEWED FOR
SS ☐ FLS ☐ ACS ☑
DATE: 04/13/2021

OFFICE OF THE STATE FIRE MARSHAL
APPROVED FIRE AND PANIC ONLY
Approval of this plan does not authorize or approve any omission or deviation from applicable regulations. Final approval is subject to field inspection. One set of approved plans shall be available on the project site at all times.
PERMIT NO. 20-N-2332-CP
REVIEWED BY: LEO CATAYLO, OSFM
DATE: 4 / /2021

DGS GENERAL SERVICES
Department of General Services
State of California
Real Estate Services Division
Project Management & Development Branch
707 Third Street, Suite 4-105
West Sacramento, California 95605

NICHOLS MELBURG & ROSSETTO ARCHITECTS + ENGINEERS
300 Knollcrest Drive
Redding, CA. 96002
(530) 222-3300 (530) 222-3538 FAX
http://www.nmrdesign.com

Copyright © 2020
All ideas, designs, arrangements and plans indicated or represented by this drawing are owned by, and the property of, NICHOLS, MELBURG and ROSSETTO and were created, evolved and developed for use on, and in conjunction with, the specified project. None of such ideas, designs, arrangements or plans shall be used by, or disclosed to any person, firm or corporation for any purpose whatsoever without the written permission of NICHOLS, MELBURG and ROSSETTO

LICENSE STAMPS

LICENSED ARCHITECT KYLE MATTHEW MELBURG REN. 10/31/21 21504 STATE OF CALIFORNIA

CONSULTANT

DRAWING STATUS
CONSTRUCTION DOCUMENTS

ISSUE

No.	Date	Description
1	10/20/2020	INITIAL PLAN REVIEW
2	01/22/2021	AGENCY RESUBMITTAL
3	03/22/2021	AGENCY RESUBMITTAL

If drawing is not 30" x 42" it is a reduced print

PROJECT
RESIDENTIAL CENTER, UKIAH: REPLACEMENT OF EXISTING RESIDENTIAL CENTER
440 EAST HILL ROAD
WILLITS, CALIFORNIA 95490
MENDOCINO COUNTY
CALIFORNIA CONSERVATION CORP

Supervisor	Designed	Drawn
KJM	DMH	Author

DSA Application No.
02-118630

SHEET TITLE
SITE DETAILS

DGS Project Number: 0000000000001826
NMR Project Number: 18-6456

Reference North: NORTH
Sheet Scale: As indicated
Sheet Number: A060

ISSUE DATE
July 9, 2021

Plot Date: 3/18/2021 5:51:20 PM
File Name: B18 A060 / CCC Willits Residential Center/A_CCC-WRC-COMMON.rvt

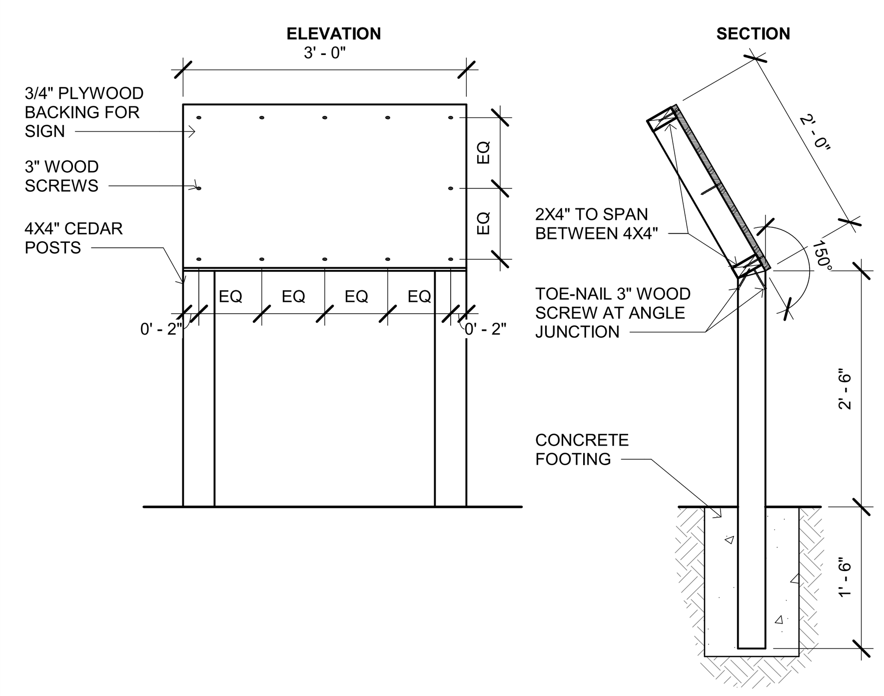

A061

WETLANDS SIGN (17)

SCALE: 3/4" = 1'-0"

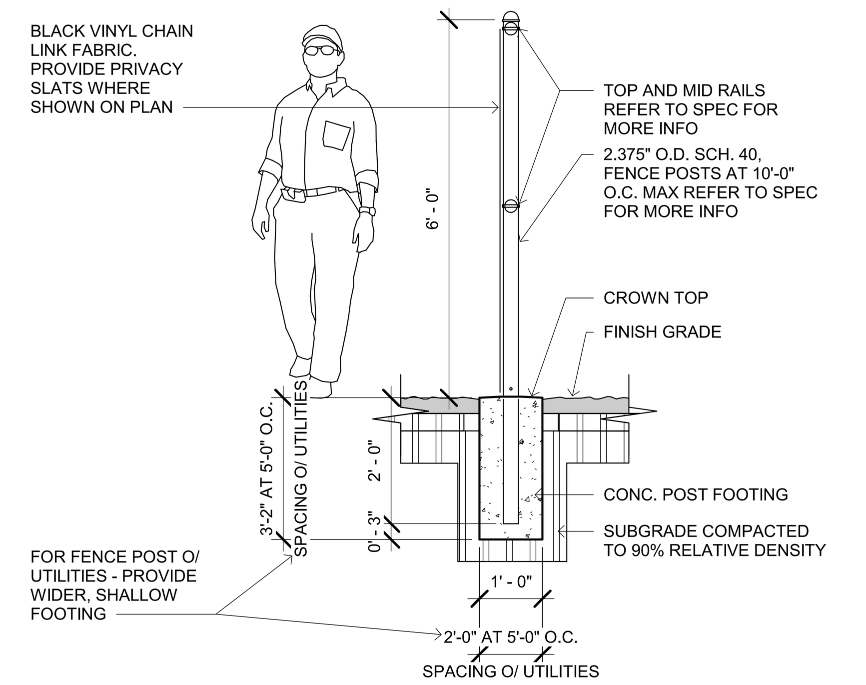

A061

CHAIN LINK FENCE (13)

SCALE: 1/2" = 1'-0"

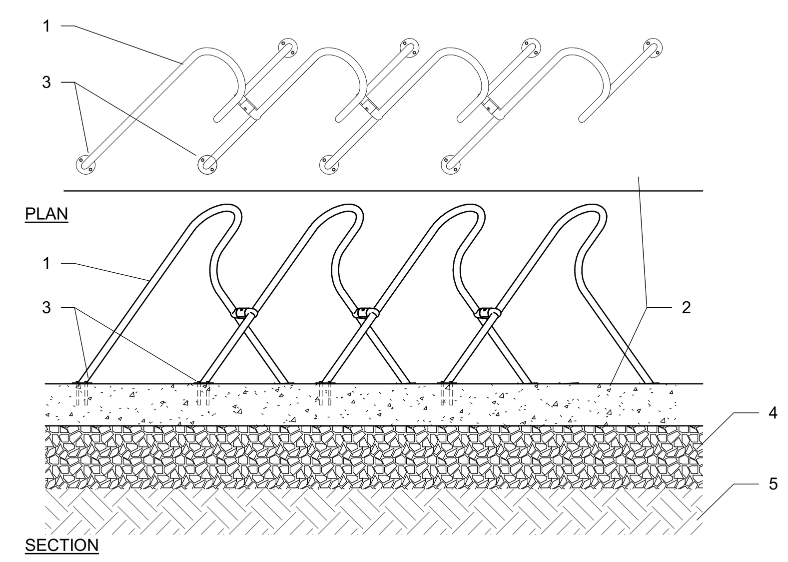

1 BIKE RACK
2 CONCRETE MOUNTING BASE
3 CONCRETE ANCHORAGE PER MANUFACTURER SPECIFICATIONS
4 AGGREGATE BASE PER GEOTECHNICAL REPORT
5 COMPACTED SUBGRADE PER GEOTECHNICAL REPORT

A061

BIKE RACK ANCHORAGE (9)

SCALE: 1" = 1'-0"

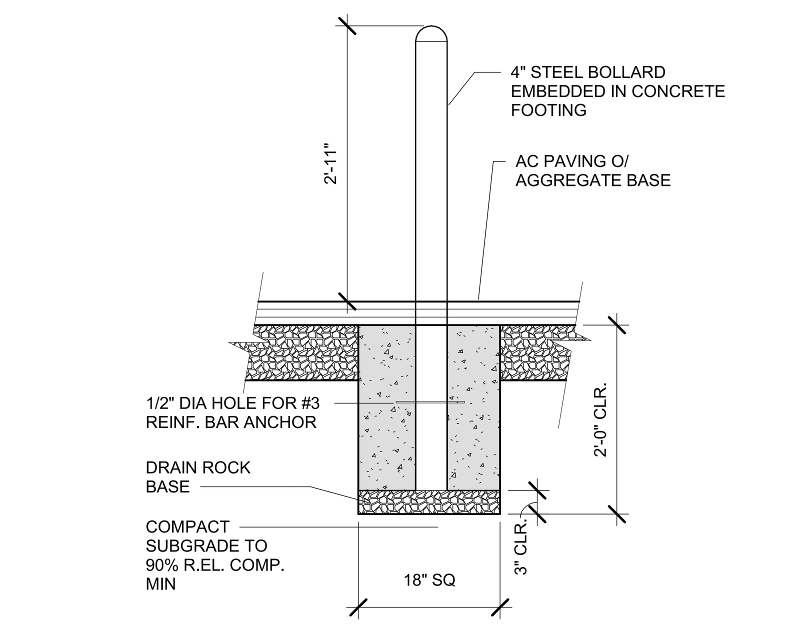

A061

UTILITY BOLLARD (5)

SCALE: 3/4" = 1'-0"

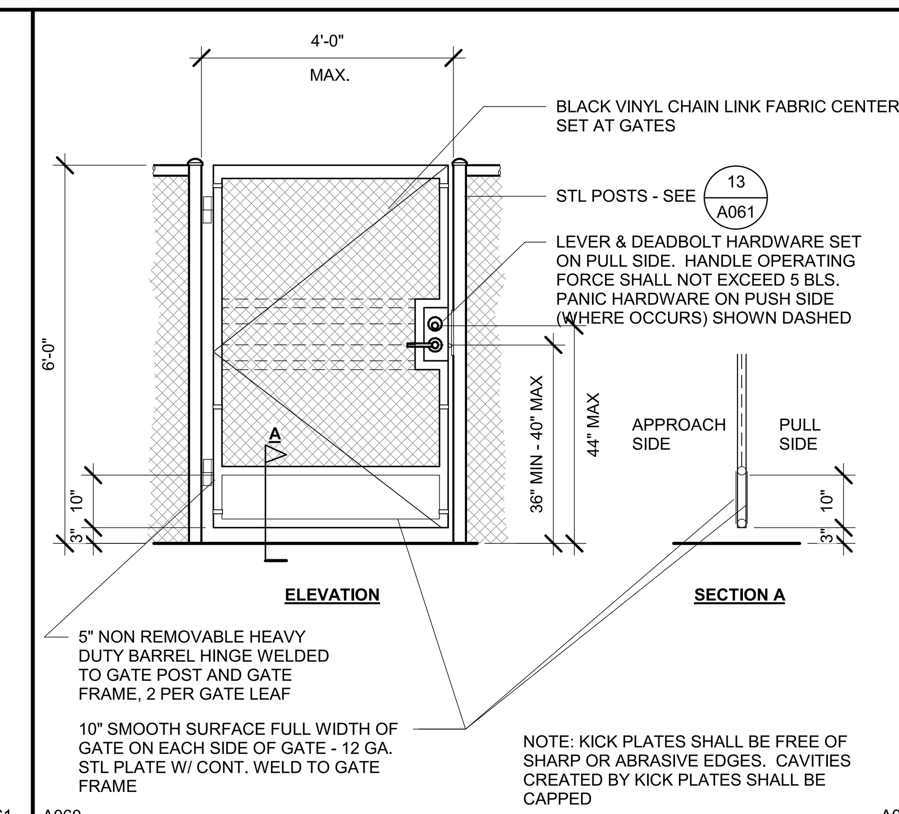

A060 A061

SINGLE CHAIN LINK GATE W/ LEVER HARDWARE (1)

SCALE: 1/2" = 1'-0"

GATE SCHEDULE

NUMBER	SIZE: WIDTH	SIZE: HEIGHT	MATERIAL	DETAIL	FOUNDATION DETAIL	HARDWARE: LEVER	HARDWARE: PANIC	HARDWARE GROUP	REMARKS
G101	20'-0"	6'-0"	P	4 / A061	4 / A061	-	-	34	4, 5
G102	26'-0"	6'-0"	CL	3 / A061	13 / A061	-	-	34	4, 5
G103	4'-0"	6'-0"	CL	1 / A061	13 / A061	•	•	33	1, 2, 3
G104	8'-4"	6'-0"	CL	3 / A061	13 / A061	•	-	35	-
G105	4'-0"	6'-0"	CL	1 / A061	13 / A061	-	-	33	1, 2, 3
G106	4'-0"	6'-0"	CL	1 / A061	13 / A061	-	-	33	1, 2, 3
G107	4'-0"	6'-0"	CL	1 / A061	13 / A061	-	-	33	1, 2, 3
G108	4'-0"	8'-0"	CL	1 / A061	13 / A061	•	•	33	1, 2, 3
G109	11'-4"	8'-0"	CM	19 / A061	——	-	-	——	-

MATERIAL (PER SPECS., UON)
CL CHAIN LINK
P PICKET
CM CORRUGATED METAL

REMARKS
1. ACCESSIBLE LATCH
2. LOCKED OPEN DURING ALL HOURS
3. 5 LB. MAX. OPERATING PRESSURE
4. KNOX BOX - MODEL NUMBER ACCEPTABLE TO LOCAL FIRE MARSHAL - CONTRACTOR SHALL ORDER ALL KNOX BOXES THROUGH LOCAL FIRE MARSHAL
5. VEHICULAR USE ONLY

A061

GATE SCHEDULE (18)

SCALE: 1" = 1'-0"

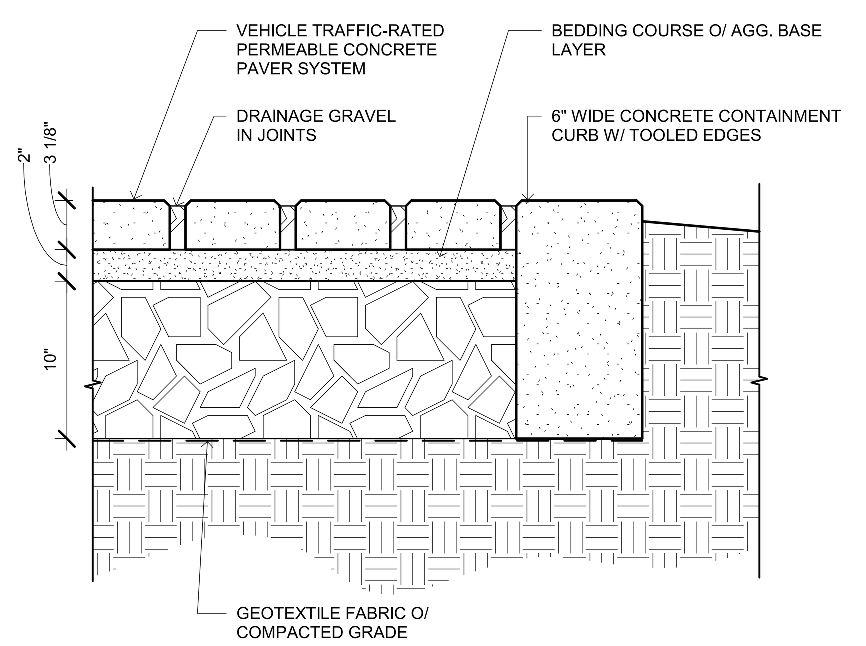

A061

CONCRETE PAVER SECTION (14)

SCALE: 1 1/2" = 1'-0"

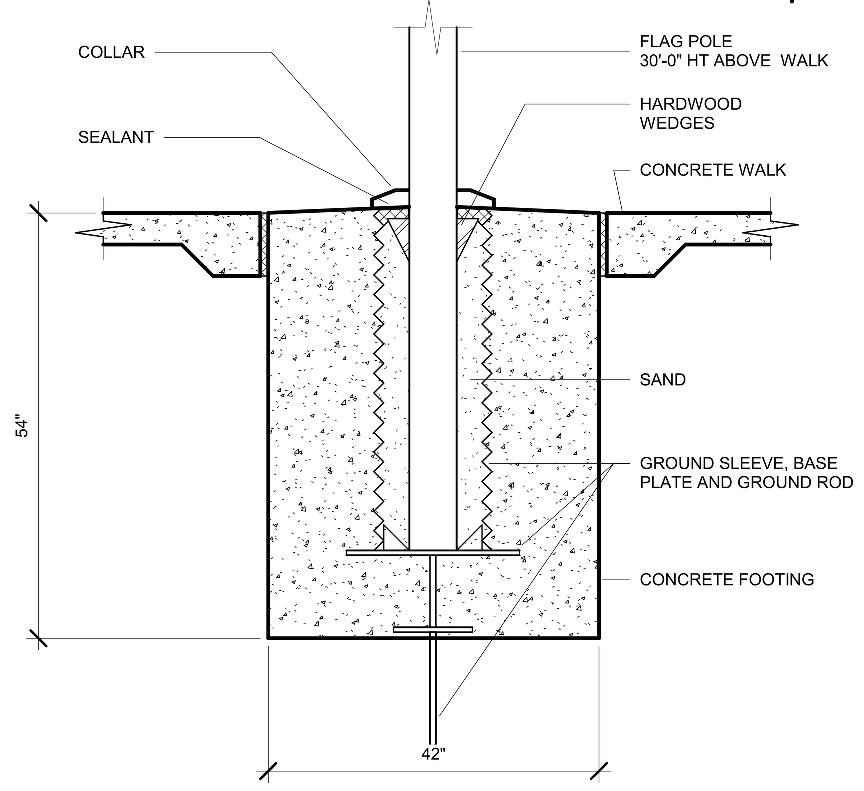

A061

FLAG POLE (10)

SCALE: 3/4" = 1'-0"

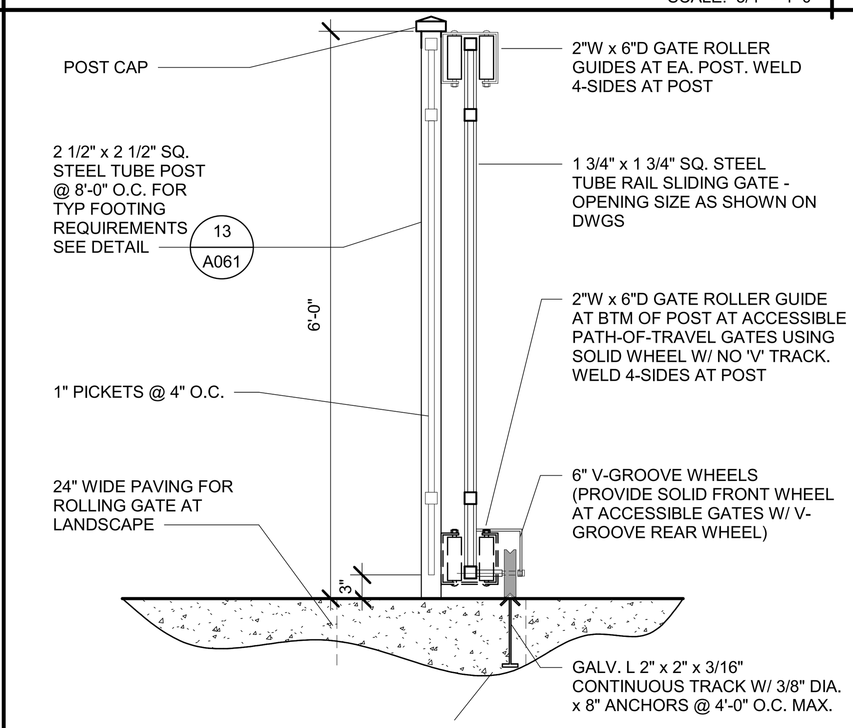

'V' TRACK SHALL STOP AT EDGE OF OPENING AT ALL ACCESSIBLE PEDESTRIAN PATH-OF-TRAVEL GATES. THE WIDTH OF GATE OPENING SHALL BE WITHOUT TRACK. REFER TO GATE SCHEDULE FOR WIDTH OF OPENING. PROVIDE TRACK ON EITHER SIDE OF OPENING FOR THESE GATES. ALL NON-ACCESSBLE GATES (VEHICLE GATES) HAVE TRACK FOR FULL LENGTH OF OPENING

A061

ROLLING GATE SECTION (6)

SCALE: 3/4" = 1'-0"

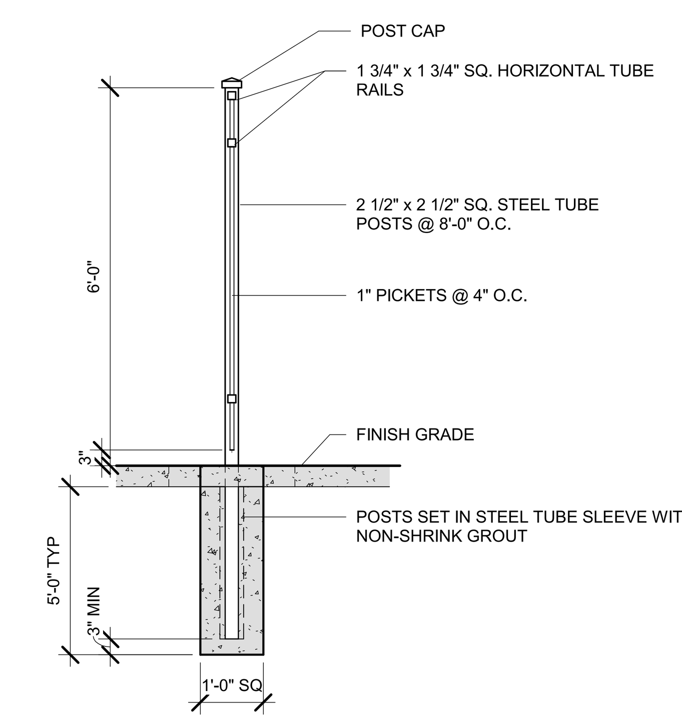

A061

ORNAMENTAL PICKET FENCE (2)

SCALE: 1/2" = 1'-0"

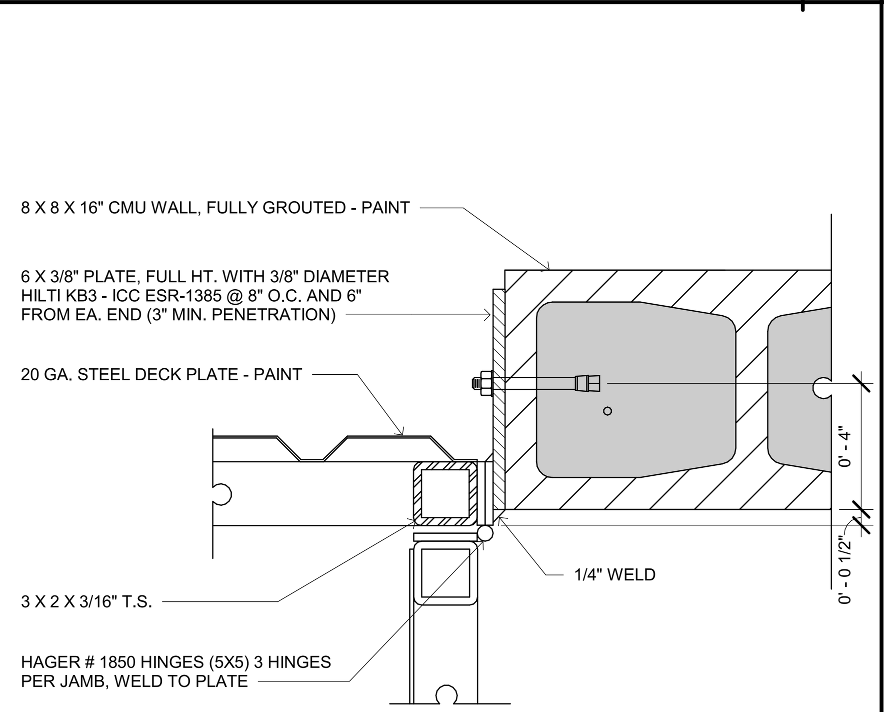

A060 A061

TRANSFORMER GATE JAMB (19)

SCALE: 3" = 1'-0"

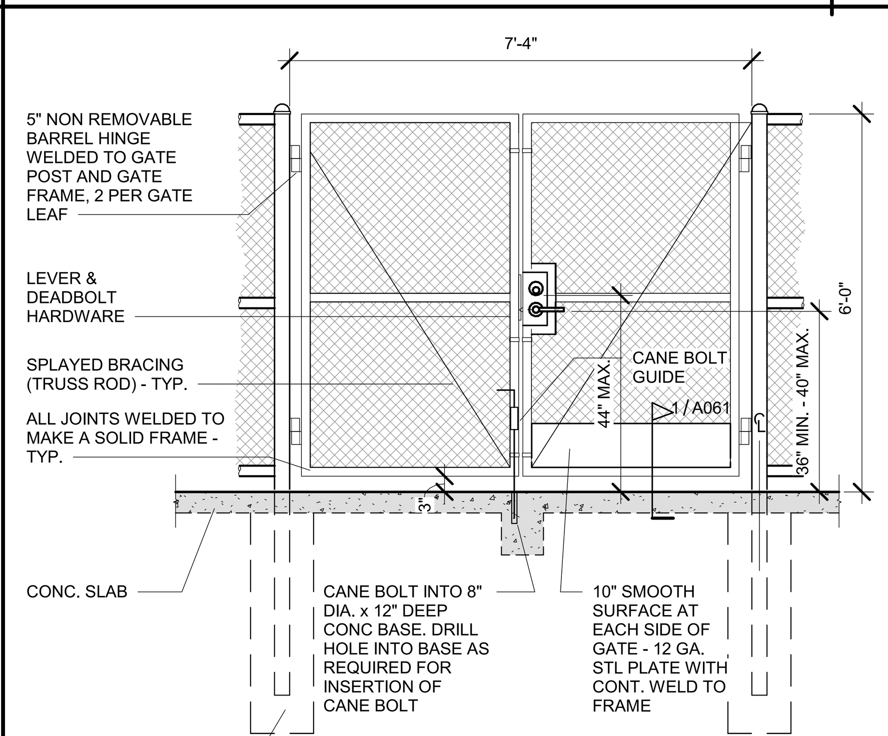

NOTE: KICK PLATES SHALL BE FREE OF SHARP OR ABRASIVE EDGES. CAVITIES CREATED BY KICK PLATES SHALL BE CAPPED

A061

DOUBLE CHAIN LINK GATES WITH LEVER HARDWARE (15)

SCALE: 1/2" = 1'-0"

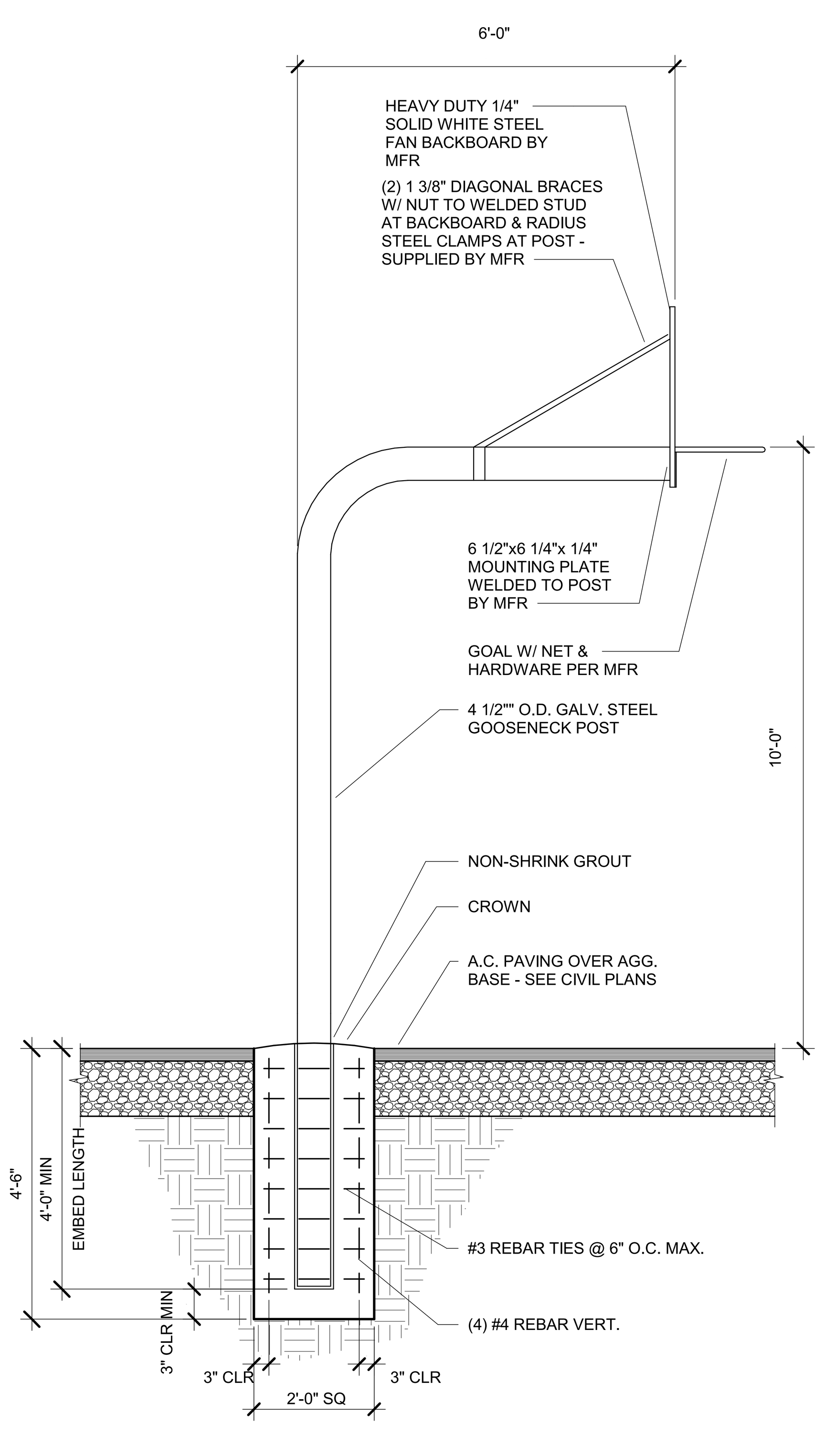

A061

SINGLE POLE BASKETBALL STANDARD (12)

SCALE: 1/2" = 1'-0"

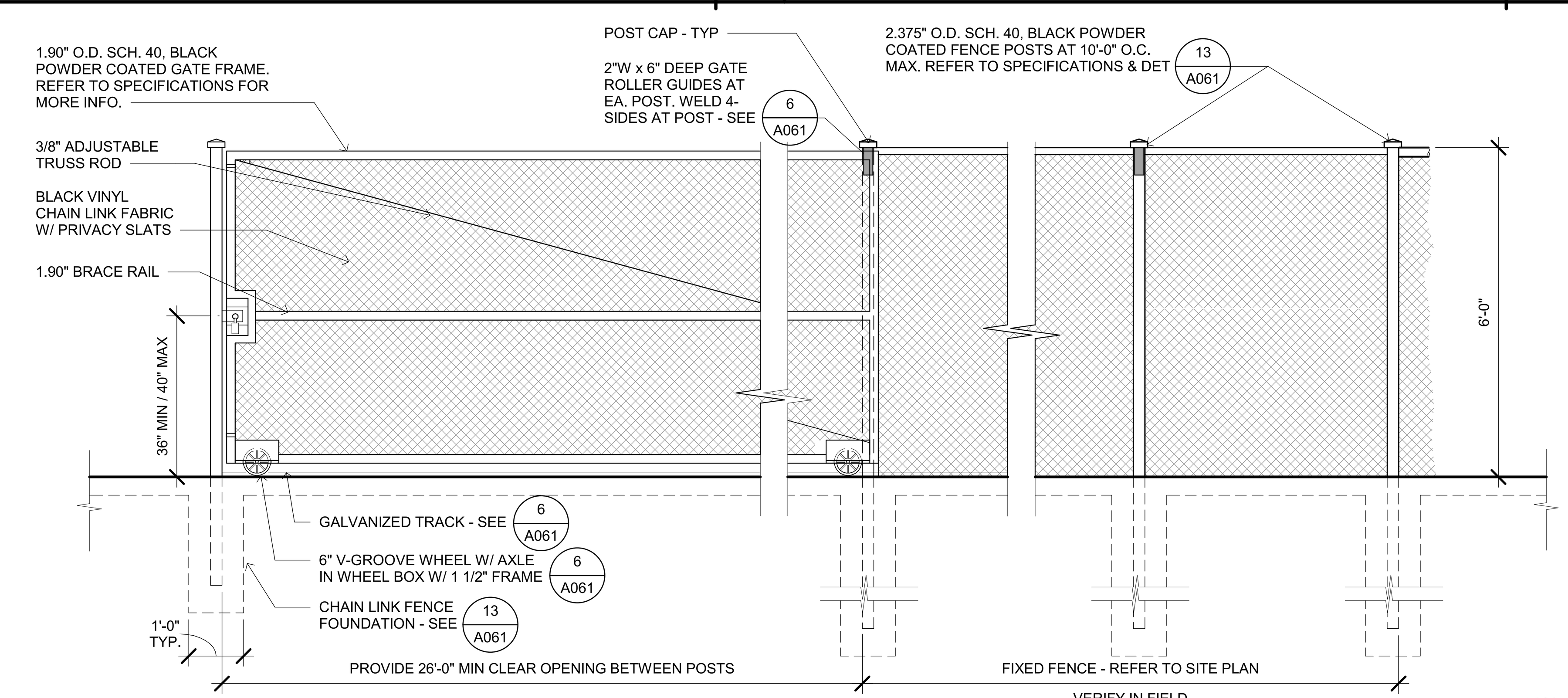

A061

ROLLING ACCESS GATE - CHAIN LINK FENCE (3)

SCALE: 1/2" = 1'-0"

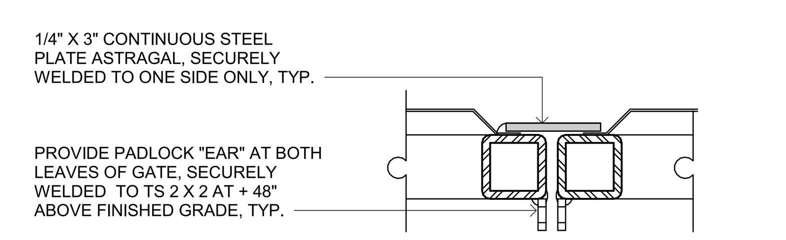

A060 A061

TRANSFORMER GATE LOCK (20)

SCALE: 3" = 1'-0"

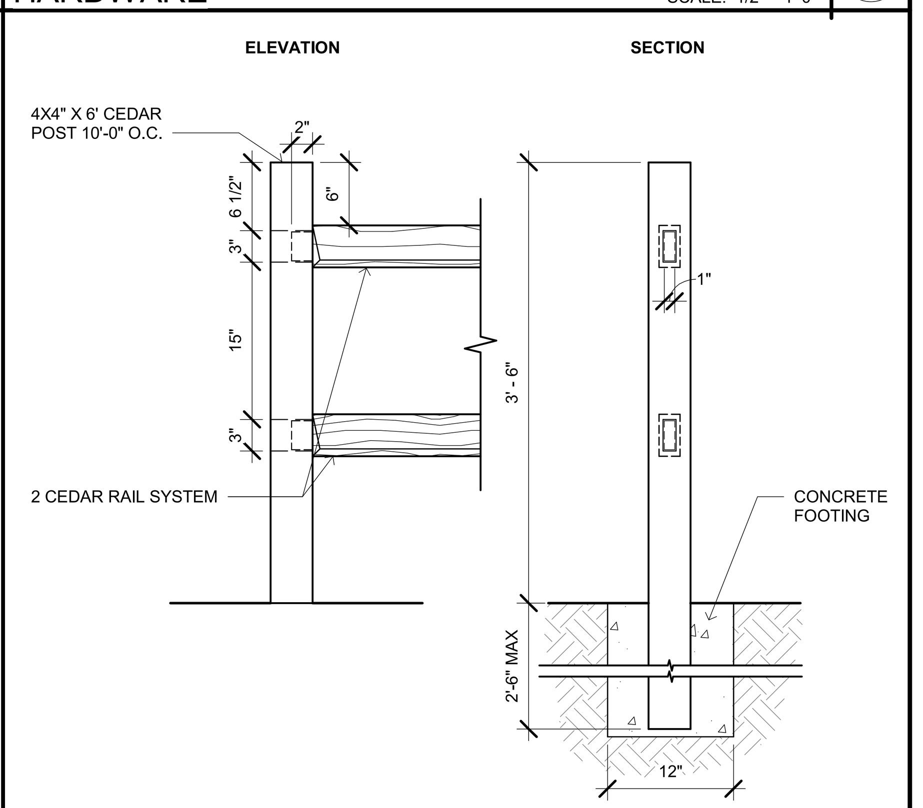

A061

SPLIT RAIL FENCING (16)

SCALE: 1" = 1'-0"

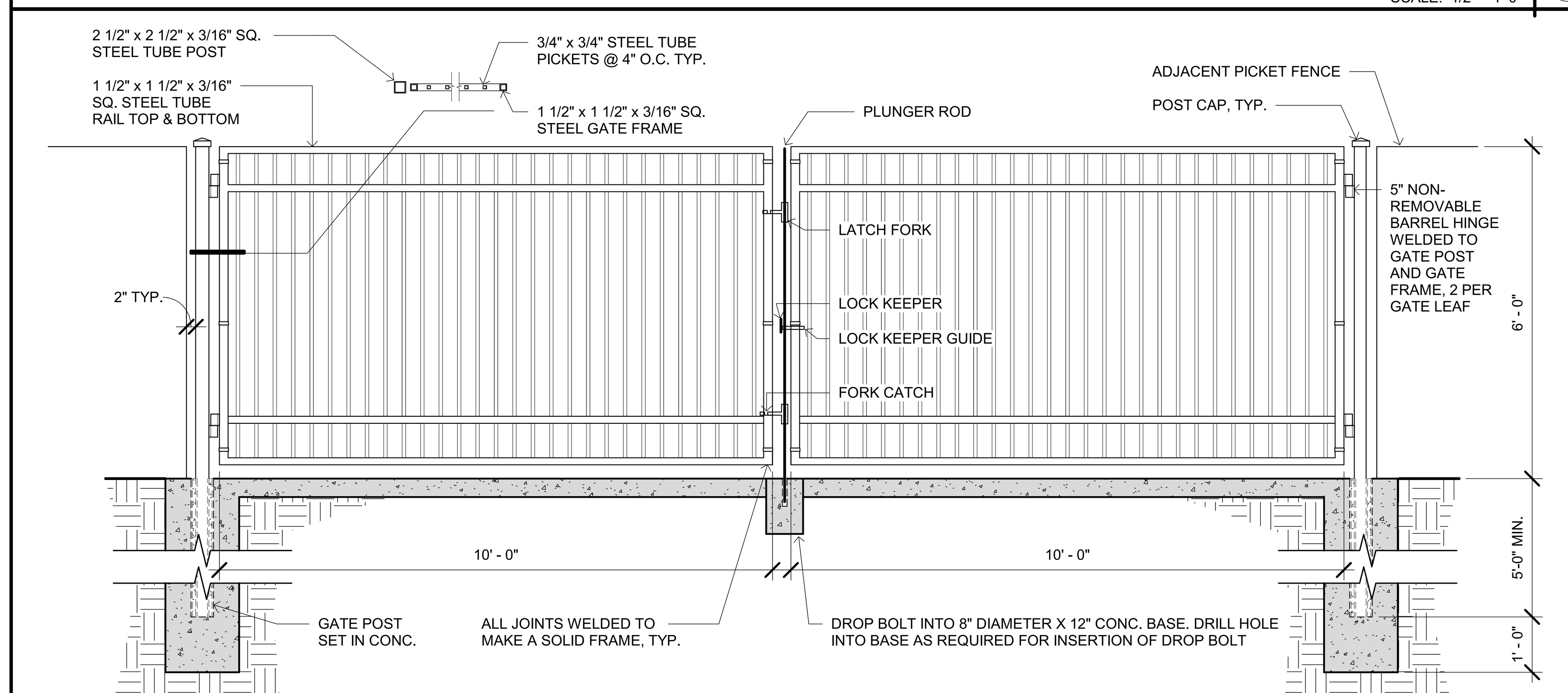

A061

SWINGING FIRE ACCESS GATE - ORNAMENTAL PICKET FENCE (4)

SCALE: 1/2" = 1'-0"

Plot Date: 3/18/2021 3:51:25 PM
File Name: BIM 360://CCC Willits Residential Center/A_CCC-WRC-COMMON.rvt

IDENTIFICATION STAMP
DIV. OF THE STATE ARCHITECT
APP: 02-118630 INC:
REVIEWED FOR
SS ☐ FLS ☐ ACS ☑
DATE: 04/13/2021

OFFICE OF THE STATE FIRE MARSHAL
APPROVED FIRE AND PANIC ONLY
Approval of this plan does not authorize or approve any omission or deviation from applicable regulations. Final approval is subject to field inspection. One set of approved plans shall be available on the project site at all times.
PERMIT NO.: 20-N-2332-CP
REVIEWED BY: LITO CATAYLO, OSFM
DATE: 4/1/2021

GENERAL SERVICES
Department of General Services
State of California
Real Estate Services Division
Project Management & Development Branch
707 Third Street, Suite 4-105
West Sacramento, California 95605

NICHOLS MELBURG & ROSSETTO
ARCHITECTS + ENGINEERS
300 Knollcrest Drive
Redding, CA. 96002
(530) 222-3300 (530) 222-3538 FAX
http://www.nmrdesign.com

Copyright © 2020 S15
All ideas, designs, arrangements and plans indicated or represented by this drawing are owned by, and the property of, NICHOLS, MELBURG and ROSSETTO and were created, evolved and developed for use on, and in conjunction with, the specified project. None of such ideas, designs, arrangements or plans shall be used by, or disclosed to any person, firm or corporation for any purpose whatsoever without the written permission of NICHOLS, MELBURG and ROSSETTO.

LICENSE STAMPS
LICENSED ARCHITECT KYLE MATTI C 27504 REN. 10/31/21 STATE OF CALIFORNIA

CONSULTANT

DRAWING STATUS
CONSTRUCTION DOCUMENTS

ISSUE

No.	Date	Description
1	10/20/2020	INITIAL PLAN REVIEW
2	01/22/2021	AGENCY RESUBMITTAL
3	03/22/2021	AGENCY RESUBMITTAL

If drawing is not 30" x 42" it is a reduced print

PROJECT
RESIDENTIAL CENTER, UKIAH: REPLACEMENT OF EXISTING RESIDENTIAL CENTER
440 EAST HILL ROAD
WILLITS, CALIFORNIA 95490
MENDOCINO COUNTY
CALIFORNIA CONSERVATION CORP

Supervisor KJM | Designed DMH | Drawn Author

DSA Application No. 02-118630

SHEET TITLE
SITE DETAILS

DGS Project Number 000000000001826 | NMR Project Number 18-6456

Reference North NORTH | Sheet Scale As indicated | Sheet Number A061

ISSUE DATE
July 9, 2021

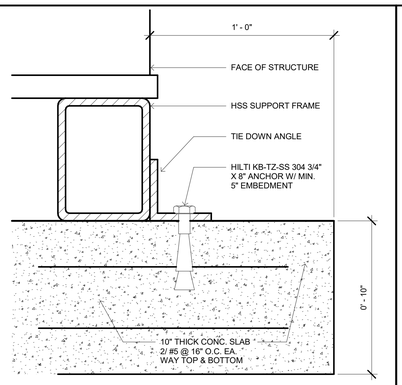

A062

HAZMAT BUILDING ANCHORAGE

SCALE: 3" = 1'-0" — 17

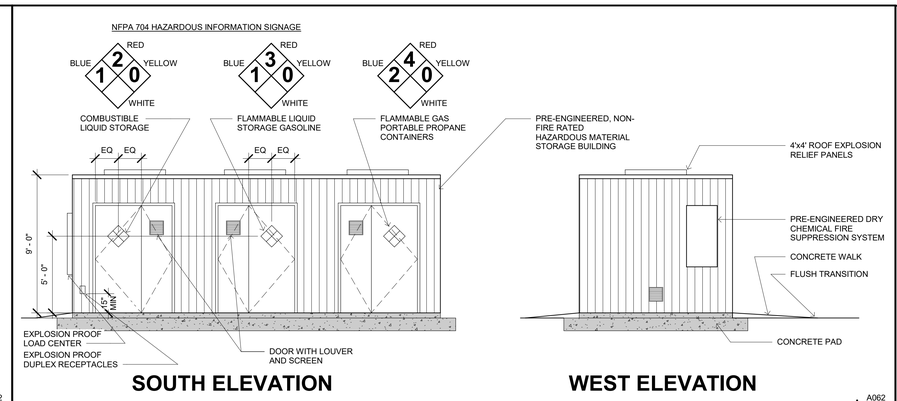

A062

HAZARDOUS MATERIALS STORAGE EXTERIOR ELEVATIONS

SCALE: 1/4" = 1'-0" — 9

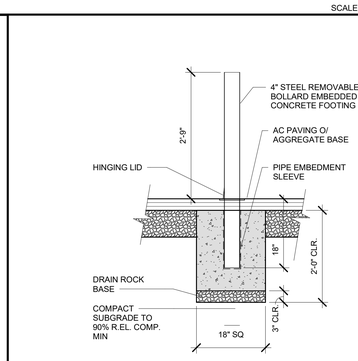

A062

UTILITY BOLLARD

SCALE: 3/4" = 1'-0" — 10

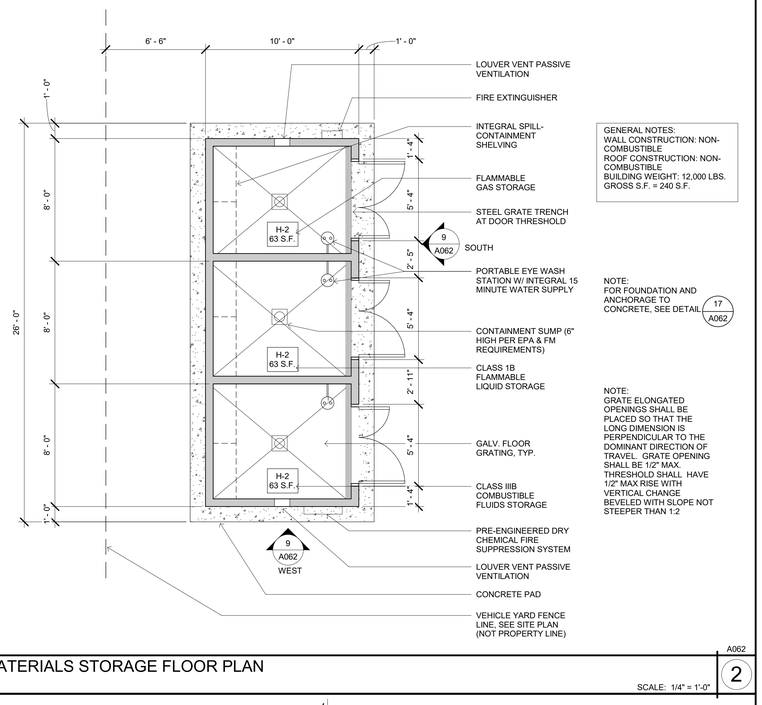

A062

HAZARDOUS MATERIALS STORAGE FLOOR PLAN

SCALE: 1/4" = 1'-0" — 2

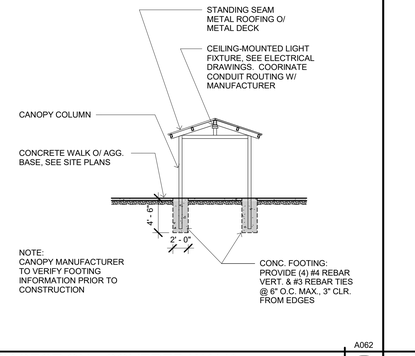

A062

CANOPY SECTION - COVERED WALK

SCALE: 1/8" = 1'-0" — 19

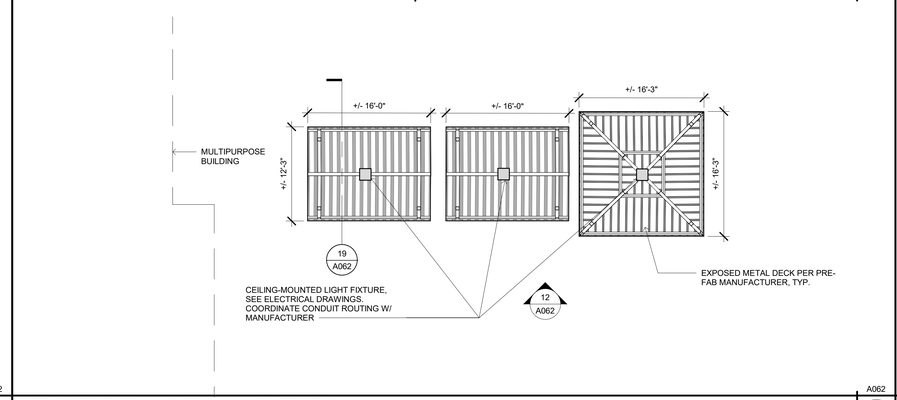

A062

REFLECTED CEILING PLAN - COVERED WALK

SCALE: 1/8" = 1'-0" — 11

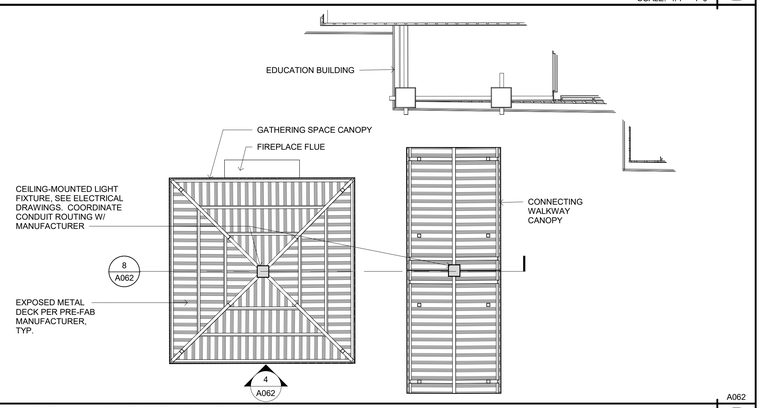

A062

REFLECTED CEILING PLAN - GATHERING AREA

SCALE: 1/8" = 1'-0" — 3

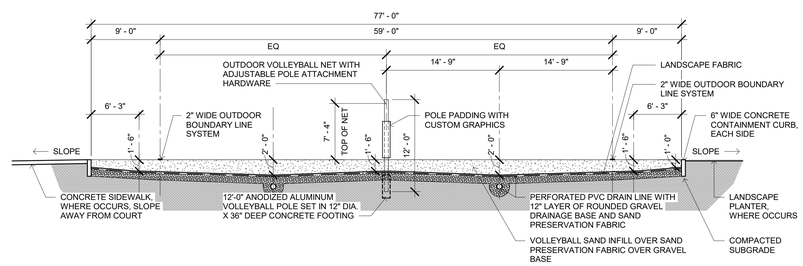

A062

LONGITUDINAL SECTION - VOLLEYBALL COURT

SCALE: 1/8" = 1'-0" — 16

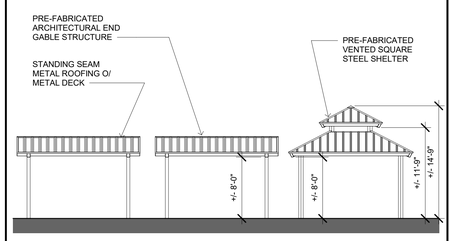

A062

CANOPY ELEVATION - COVERED WALK

SCALE: 1/8" = 1'-0" — 12

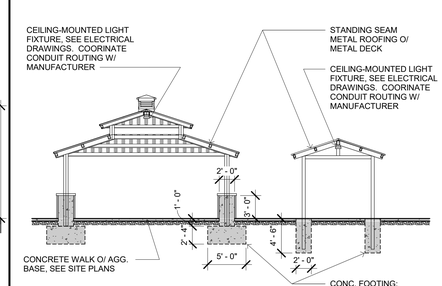

A062

CANOPY SECTION - GATHERING AREA

SCALE: 1/8" = 1'-0" — 8

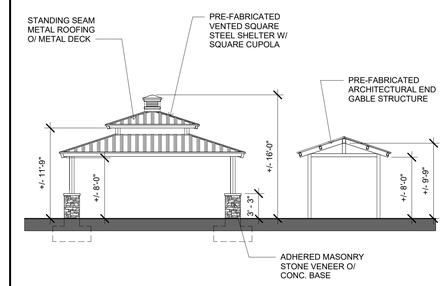

A062

CANOPY ELEVATION - GATHERING AREA

SCALE: 1/8" = 1'-0" — 4

Plot Date: 5/19/2021 12:08:21 PM
File Name: 3180.300 /CCC Willits Residential Center/A_CCC-WRC-COMMON.rvt

IDENTIFICATION STAMP
DIV. OF THE STATE ARCHITECT
APP: 02-118630 INC:
REVIEWED FOR
SS ☐ FLS ☐ ACS ☑
DATE: 04/13/2021

OFFICE OF THE STATE FIRE MARSHAL
APPROVED FIRE AND PANIC ONLY
Approval of this plan does not authorize or approve any omission or deviation from applicable regulations. Final approval is subject to field inspection. One set of approved plans shall be available on the project site at all times.
PERMIT NO. 20-N-2332-CP
REVIEWED BY: LEO CATAYLO, OSFM
DATE: 4 / /2021

GENERAL SERVICES
Department of General Services
State of California
Real Estate Services Division
Project Management & Development Branch
707 Third Street, Suite 4-105
West Sacramento, California 95605

NICHOLS MELBURG & ROSSETTO ARCHITECTS + ENGINEERS
300 Knollcrest Drive
Redding, CA. 96002
(530) 222-3300 (530) 222-3538 FAX
http://www.nmrdesign.com

Copyright © 2020
All ideas, designs, arrangements and plans indicated or represented by this drawing are owned by, and the property of, NICHOLS, MELBURG and ROSSETTO and were created, evolved and developed for use on, and in conjunction with, the specified project. None of such ideas, designs, arrangements or plans shall be used by, or disclosed to any person, firm or corporation for any purpose whatsoever without the written permission of NICHOLS, MELBURG and ROSSETTO

LICENSE STAMPS

LICENSED ARCHITECT — KYLE MATTHEW — C-21504 — REN. 10/31/21 — STATE OF CALIFORNIA

CONSULTANT

DRAWING STATUS
CONSTRUCTION DOCUMENTS

ISSUE

No.	Date	Description
1	10/20/2020	INITIAL PLAN REVIEW
2	01/22/2021	AGENCY RESUBMITTAL
3	03/22/2021	AGENCY RESUBMITTAL

If drawing is not 30" x 42" it is a reduced print

PROJECT
RESIDENTIAL CENTER, UKIAH: REPLACEMENT OF EXISTING RESIDENTIAL CENTER
440 EAST HILL ROAD
WILLITS, CALIFORNIA 95490
MENDOCINO COUNTY
CALIFORNIA CONSERVATION CORP

Supervisor	Designed	Drawn
KJM	DMH	Author

DSA Application No.
02-118630

SHEET TITLE
SITE DETAILS

DGS Project Number: 000000000001826
NMR Project Number: 18-6456

Reference North: NORTH
Sheet Scale: As indicated
Sheet Number: A062

ISSUE DATE
July 9, 2021

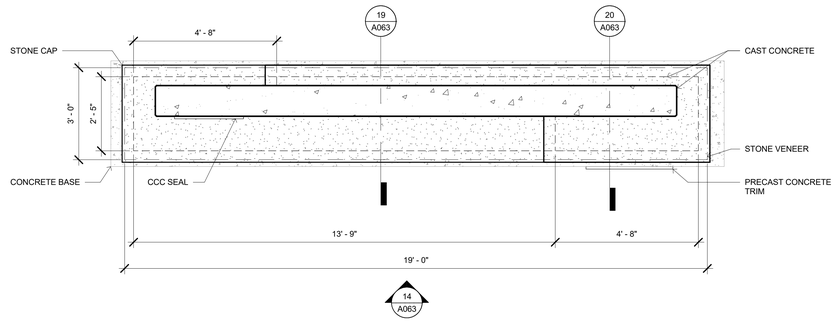

MONUMENT SIGN - PLAN

A063 13

SCALE: 1/2" = 1'-0"

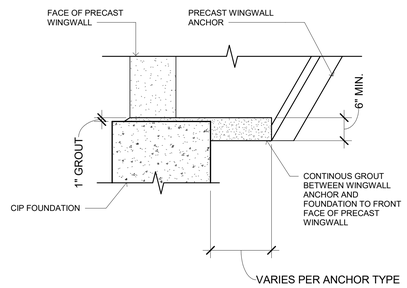

A063

BRIDGE WINGWALL GROUT

A063 9

SCALE: 3/4" = 1'-0"

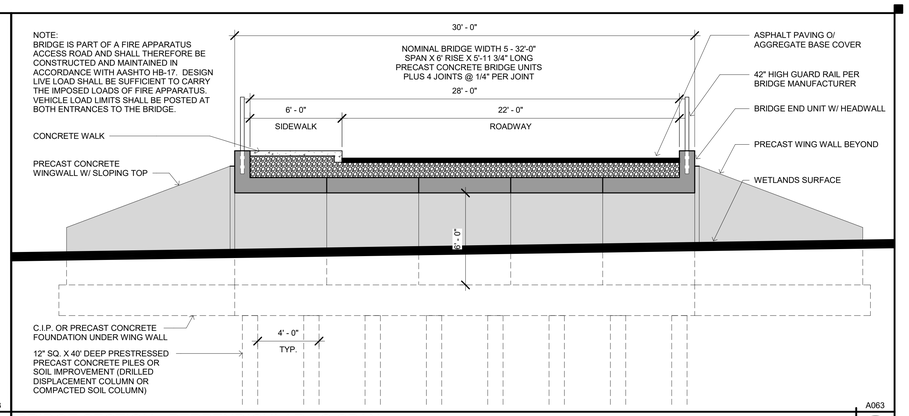

BRIDGE SECTION - PERPENDICULAR TO SPAN

A063 1

SCALE: 1/4" = 1'-0"

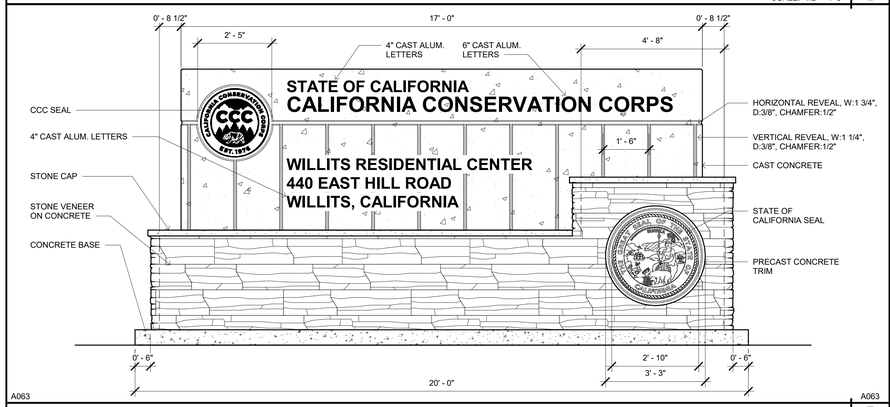

A063

MONUMENT SIGN - ELEVATION

A063 14

SCALE: 1/2" = 1'-0"

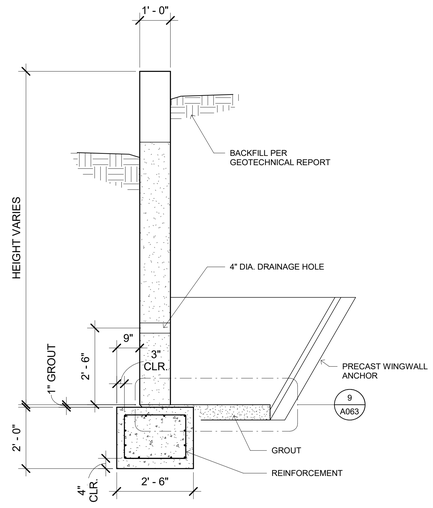

A063

A063

A063

A063

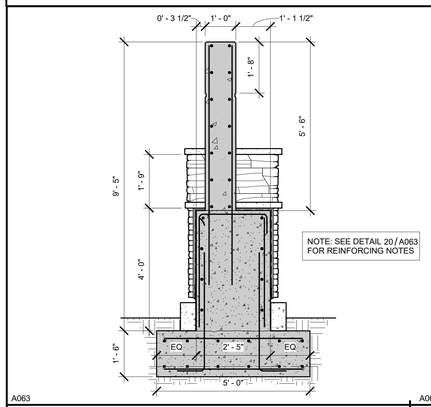

MONUMENT SIGN - SECTION A

A063 19

SCALE: 1/2" = 1'-0"

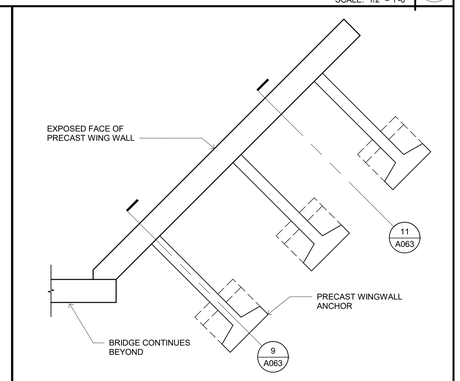

BRIDGE WINGWALL PLAN

A063 15

SCALE: 3/8" = 1'-0"

A063

A063

A063

A063

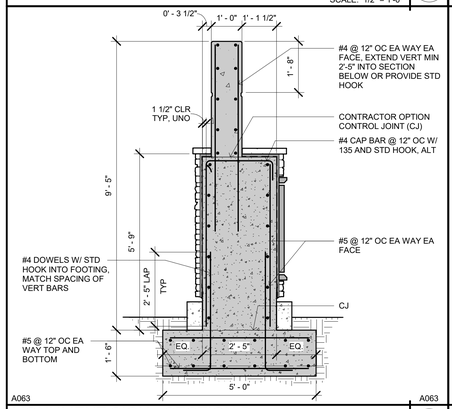

MONUMENT SIGN - SECTION B

A063 20

SCALE: 1/2" = 1'-0"

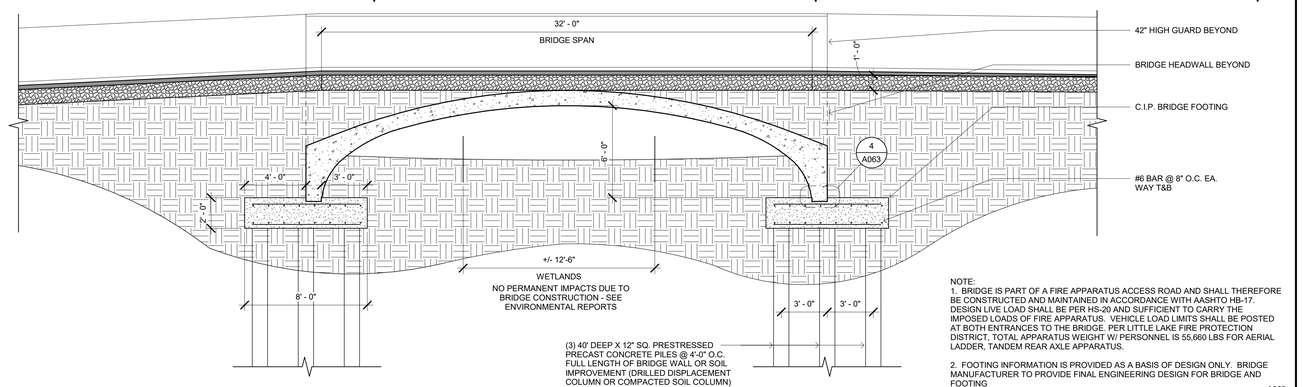

NOTE:
1. BRIDGE IS PART OF A FIRE APPARATUS ACCESS ROAD AND SHALL THEREFORE BE CONSTRUCTED AND MAINTAINED IN ACCORDANCE WITH AASHTO HB-17. DESIGN LIVE LOAD SHALL BE PER HS-20 AND SUFFICIENT TO CARRY THE IMPOSED LOADS OF FIRE APPARATUS. VEHICLE LOAD LIMITS SHALL BE POSTED AT BOTH ENTRANCES TO THE BRIDGE. PER LITTLE LAKE FIRE PROTECTION DISTRICT, TOTAL APPARATUS WEIGHT W/ PERSONNEL IS 55,660 LBS FOR AERIAL LADDER, TANDEM REAR AXLE APPARATUS.

2. FOOTING INFORMATION IS PROVIDED AS A BASIS OF DESIGN ONLY. BRIDGE MANUFACTURER TO PROVIDE FINAL ENGINEERING DESIGN FOR BRIDGE AND FOOTING

A063

BRIDGE SECTION - DIRECTION OF SPAN

A063 8

SCALE: 1/4" = 1'-0"

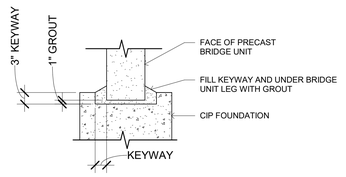

A063

BRIDGE UNIT KEYWAY AT FOUNDATION

A063 4

SCALE: 3/4" = 1'-0"

IDENTIFICATION STAMP
DIV. OF THE STATE ARCHITECT
APP: 02-118630 INC:
REVIEWED FOR
SS ☐ FLS ☐ ACS ☑
DATE: 04/13/2021

OFFICE OF THE STATE FIRE MARSHAL
APPROVED FIRE AND PANIC ONLY
Approval of this plan does not authorize or approve any omission or deviation from applicable regulations. Final approval is subject to field inspection. One set of approved plans shall be available on the project site at all times.
PERMIT NO. 20-N-2332-CP
REVIEWED BY: LEO CATAYLO, OSFM
DATE: 4 / /2021

DGS
GENERAL SERVICES
Department of General Services
State of California
Real Estate Services Division
Project Management & Development Branch
707 Third Street, Suite 4-105
West Sacramento, California 95605

NICHOLS MELBURG & ROSSETTO
ARCHITECTS + ENGINEERS
300 Knollcrest Drive
Redding, CA. 96002
(530) 222-3300 (530) 222-3538 FAX
http://www.nmrdesign.com

Copyright © 2020
All ideas, designs, arrangements and plans indicated or represented by this drawing are owned by, and the property of, NICHOLS, MELBURG and ROSSETTO and were created, evolved and developed for use on, and in conjunction with, the specified project. None of such ideas, designs, arrangements or plans shall be used by, or disclosed to any person, firm or corporation for any purpose whatsoever without the written permission of NICHOLS, MELBURG and ROSSETTO.

LICENSE STAMPS

LICENSED ARCHITECT
KYLE MATTHEW
C 27504
REN. 10/31/21
STATE OF CALIFORNIA

CONSULTANT

DRAWING STATUS
CONSTRUCTION DOCUMENTS

ISSUE

No.	Date	Description
1	10/20/2020	INITIAL PLAN REVIEW
2	01/22/2021	AGENCY RESUBMITTAL
3	03/22/2021	AGENCY RESUBMITTAL

If drawing is not 30" x 42" it is a reduced print

PROJECT
RESIDENTIAL CENTER, UKIAH: REPLACEMENT OF EXISTING RESIDENTIAL CENTER
440 EAST HILL ROAD
WILLITS, CALIFORNIA 95490
MENDOCINO COUNTY
CALIFORNIA CONSERVATION CORP

Supervisor	Designed	Drawn
KJM	DMH	Author

DSA Application No.
02-118630

SHEET TITLE
SITE DETAILS

DGS Project Number
000000000001826
NMR Project Number
18-6456

Reference North
Sheet Scale
As indicated
Sheet Number
A063

ISSUE DATE
July 9, 2021

Plot Date: 3/19/2021 2:17:24 PM
File Name: BIM 360://CCC-Willits Residential Center/A_CCC-WRC-COMMON.rvt

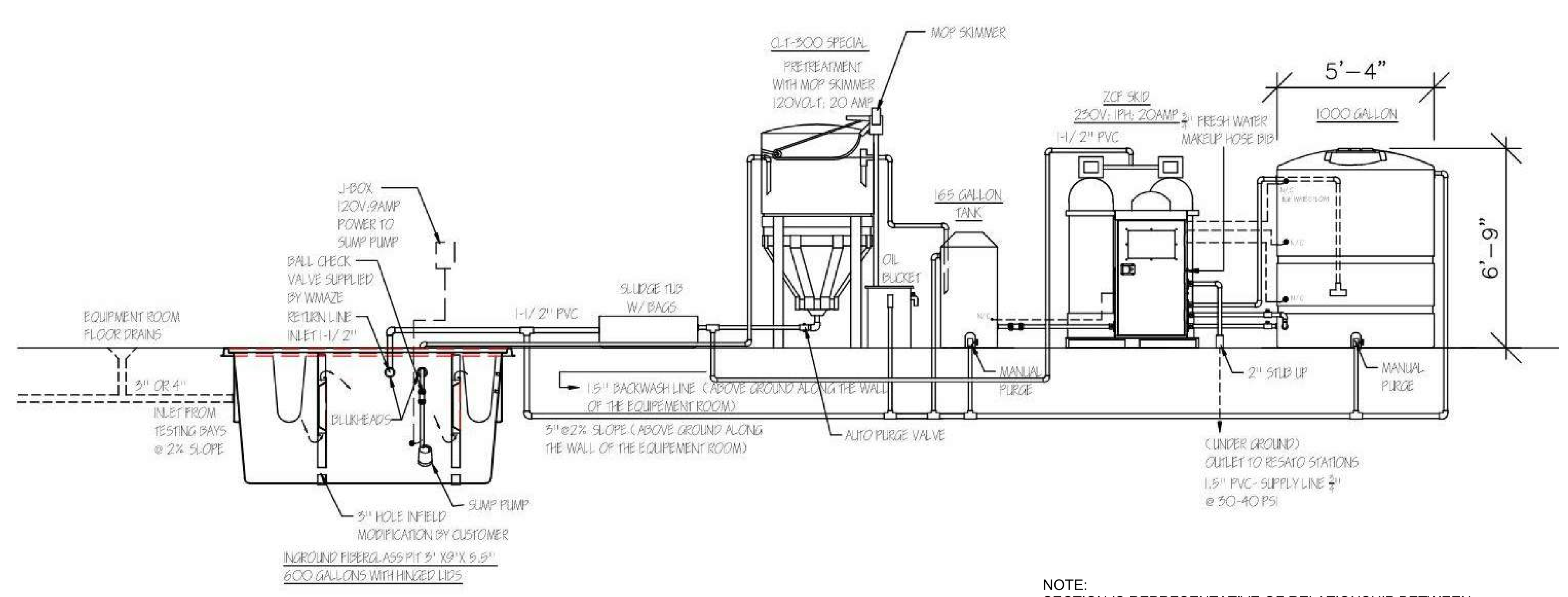

NOTE:
SECTION IS REPRESENTATIVE OF RELATIONSHIP BETWEEN COMPONENTS. SEE VEHICLE WASH AREA PARTIAL SITE PLAN FOR ACTUAL LAYOUT

A064

WATER TREATMENT EQUIPMENT SECTION
SCALE: 3" = 1'-0" (9)

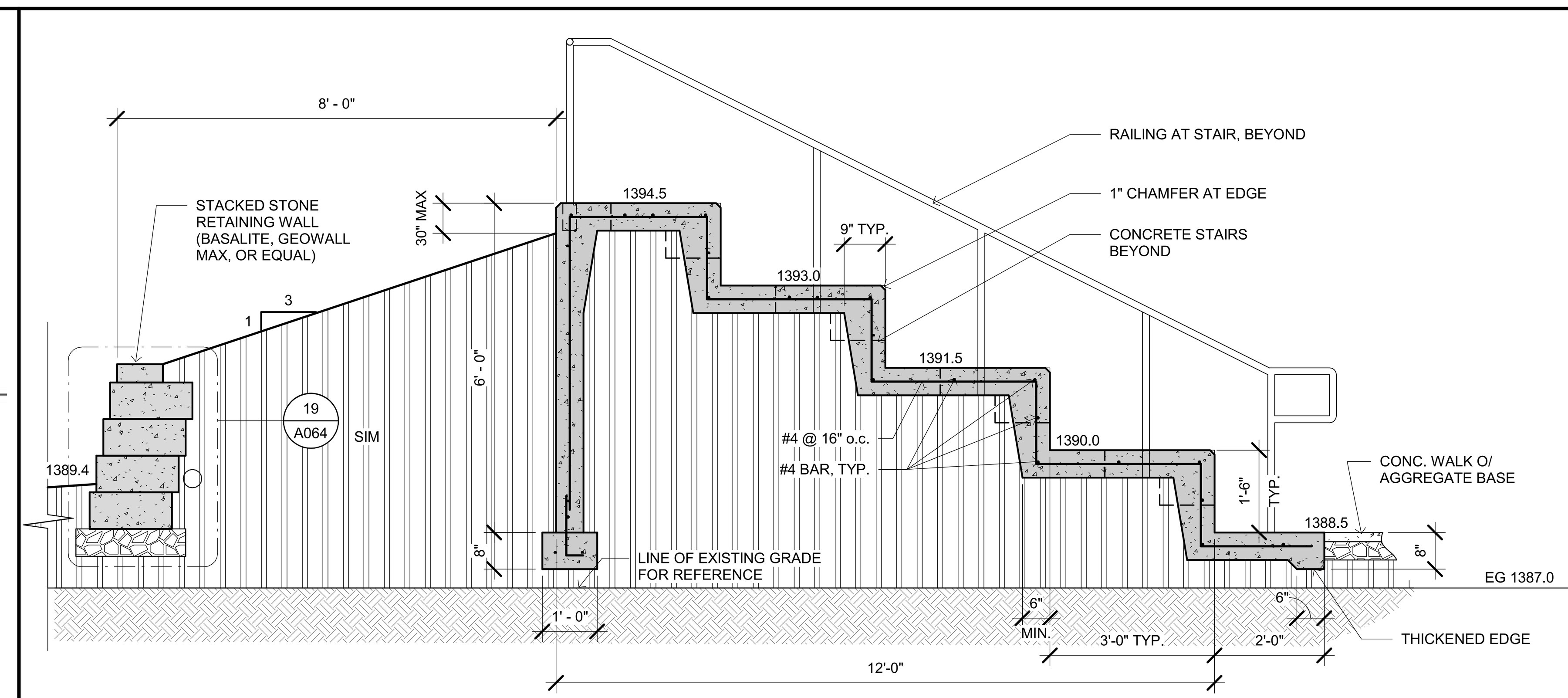

A064

CONCRETE SEATING SECTION
SCALE: 1/2" = 1'-0" (1)

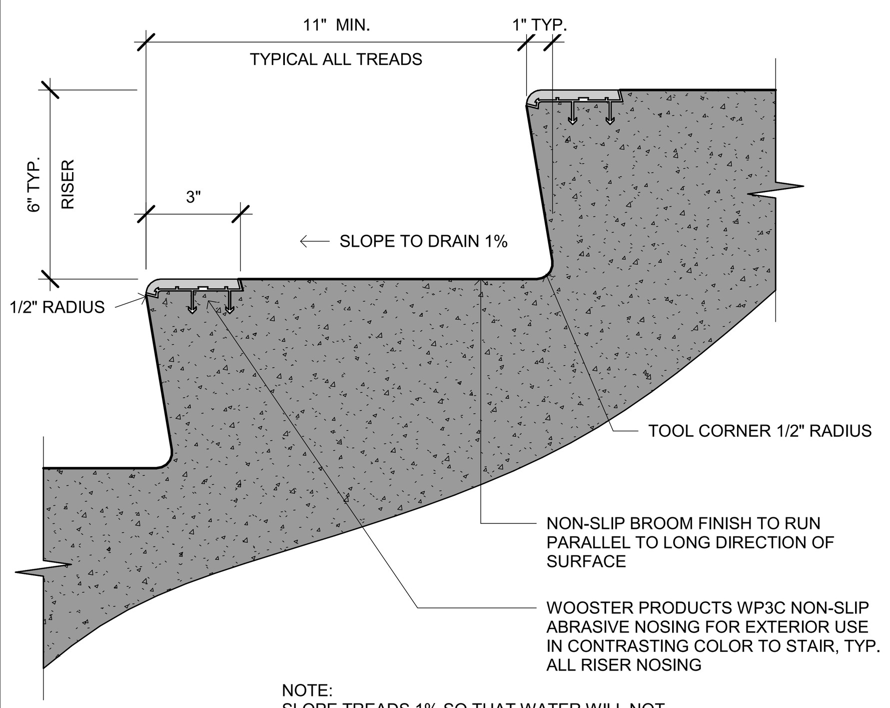

NOTE:
SLOPE TREADS 1% SO THAT WATER WILL NOT ACCUMULATE ON WALKING SURFACE. BROOM FINISH IN THE LONG DIRECTION OF TREADS

A064

CONCRETE STAIR FINISH
SCALE: 3" = 1'-0" (18)

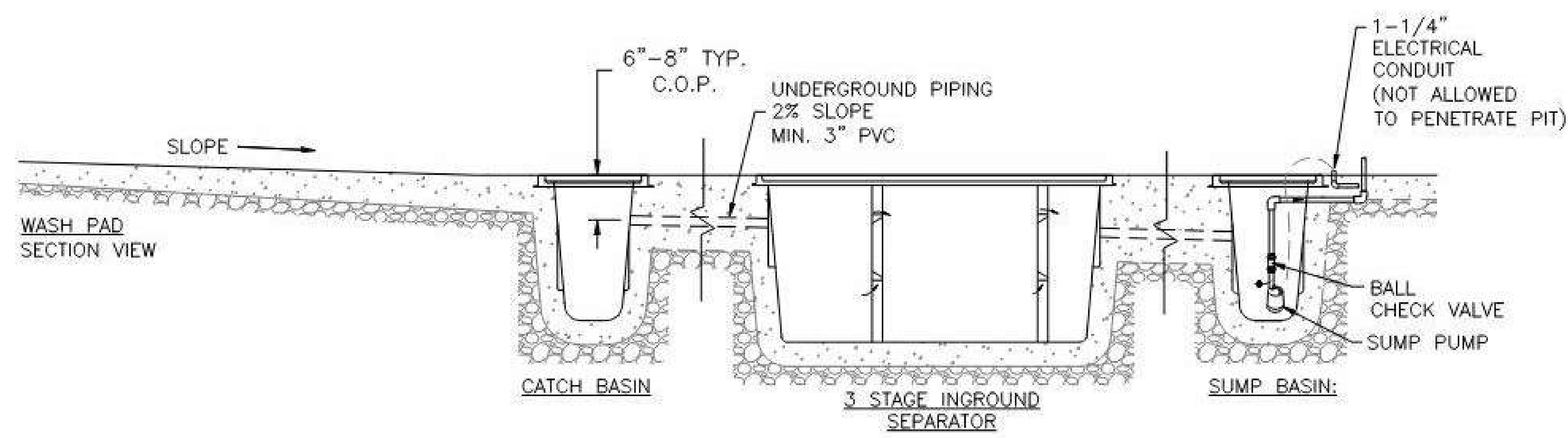

NOTE:
SECTION IS REPRESENTATIVE OF RELATIONSHIP BETWEEN COMPONENTS. SEE VEHICLE WASH AREA PARTIAL SITE PLAN FOR ACTUAL LAYOUT

A064

WATER TREATMENT PIT SECTION
SCALE: 3" = 1'-0" (10)

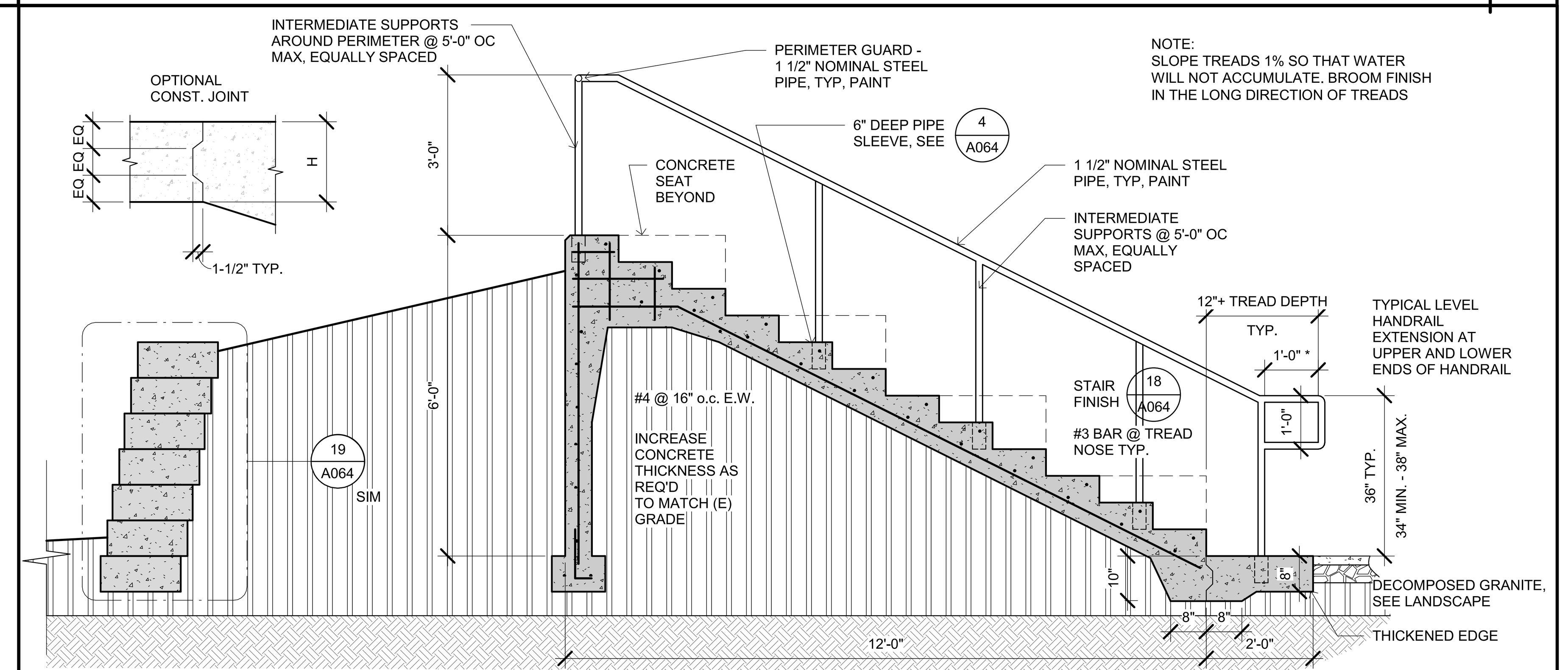

NOTE:
SLOPE TREADS 1% SO THAT WATER WILL NOT ACCUMULATE. BROOM FINISH IN THE LONG DIRECTION OF TREADS

A064

CONCRETE SEATING STAIR SECTION
SCALE: 1/2" = 1'-0" (2)

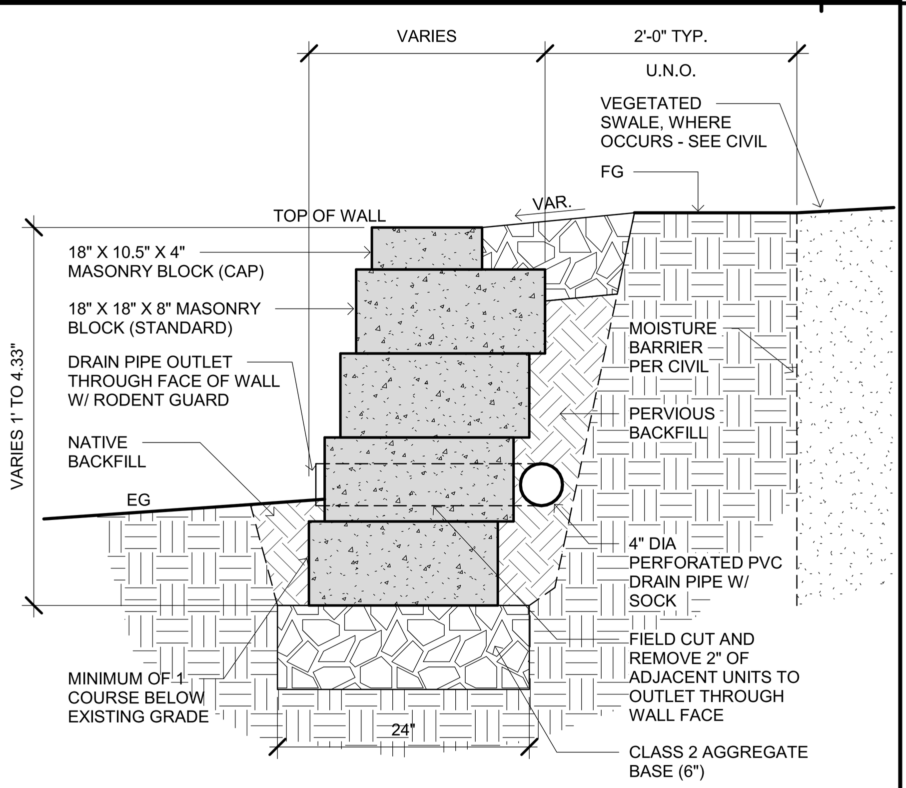

A064

RETAINING WALL BLOCK DETAIL
A064
SCALE: 1" = 1'-0" (19)

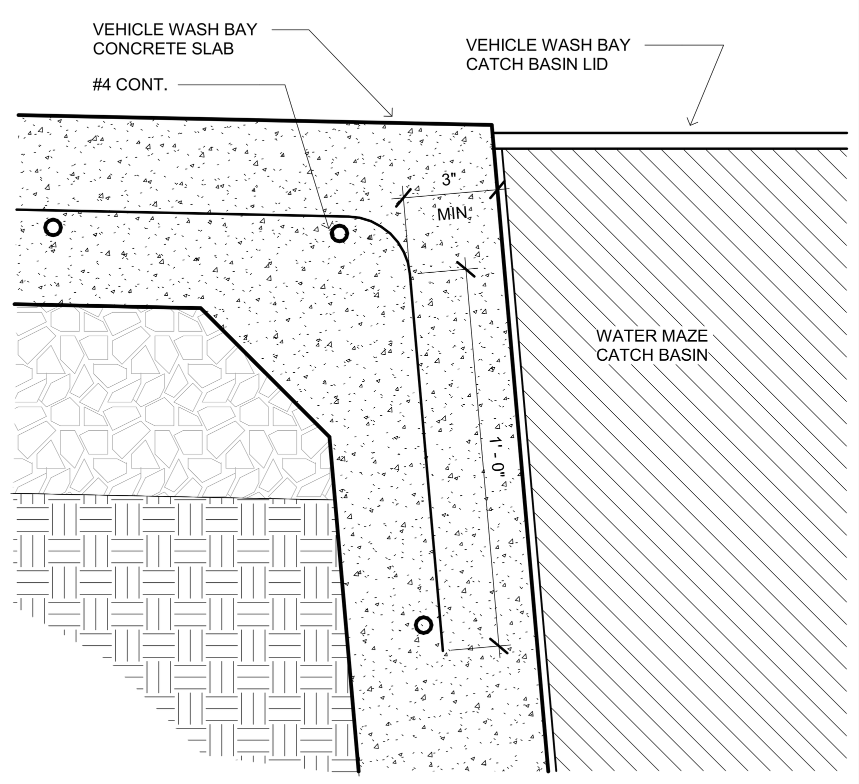

A064

CONC. SLAB TO CATCH BASIN
A064
SCALE: 3" = 1'-0" (15)

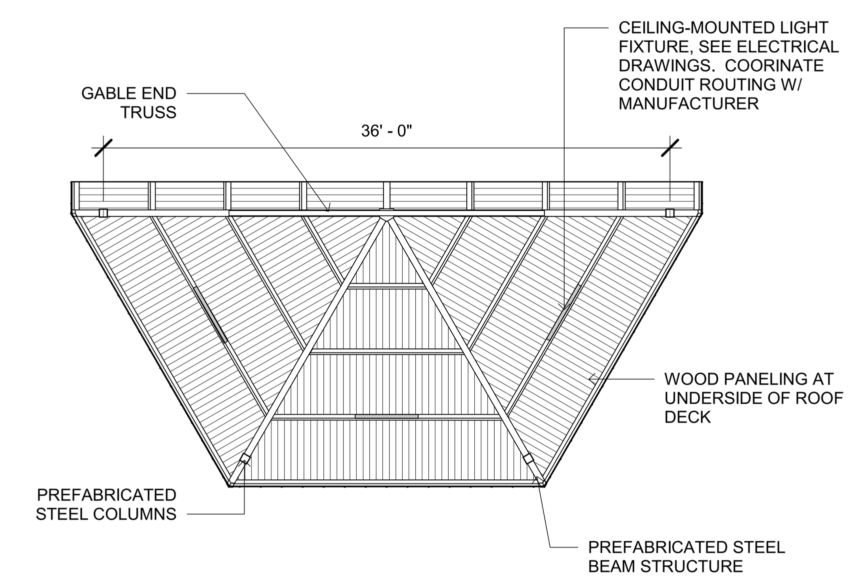

A064

REFLECTED CEILING PLAN - AMPHITHEATER
SCALE: 1/8" = 1'-0" (11)

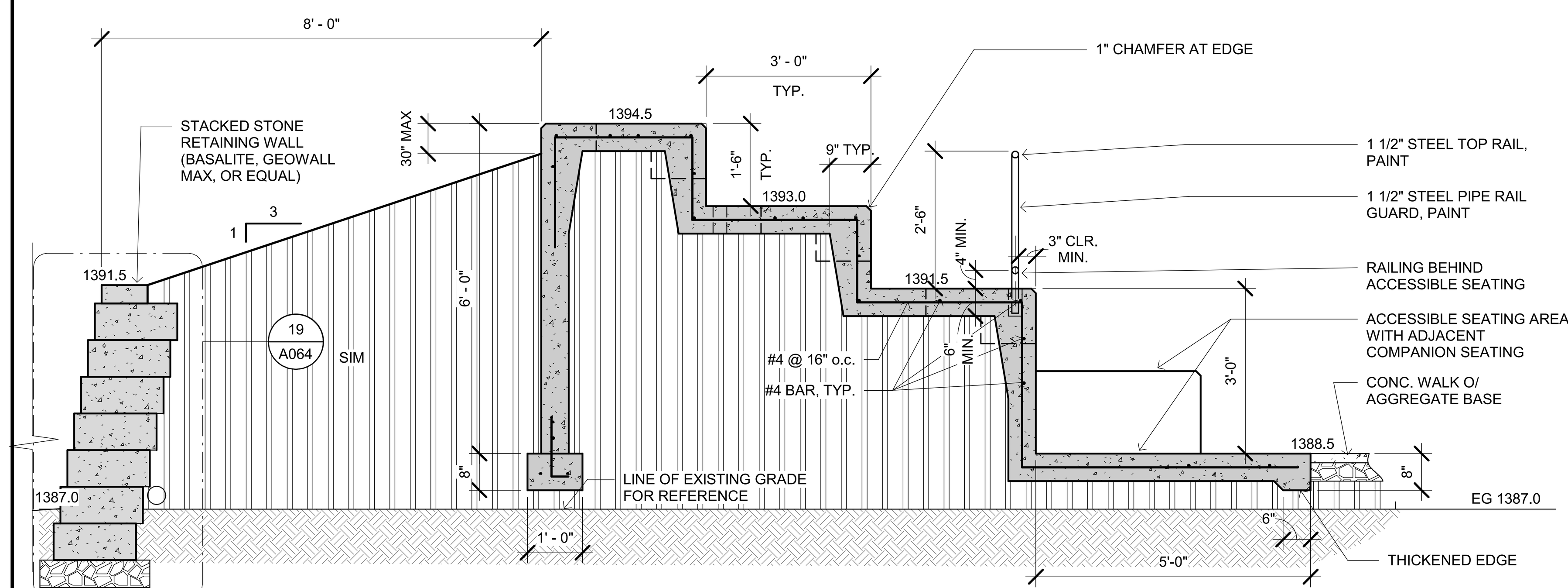

A064

CONCRETE SEATING SECTION AT ACCESSIBLE SEATING
SCALE: 1/2" = 1'-0" (3)

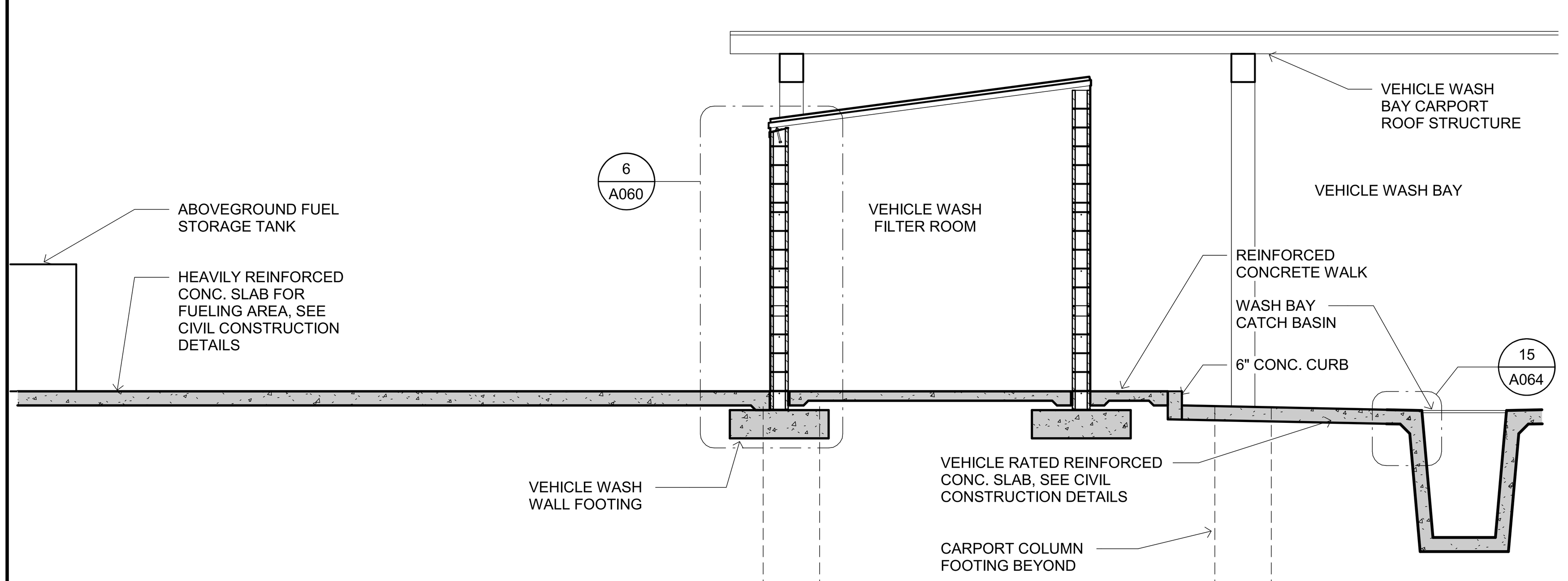

A060

VEHICLE WASH BAY SECTION
A064
SCALE: 1/4" = 1'-0" (16)

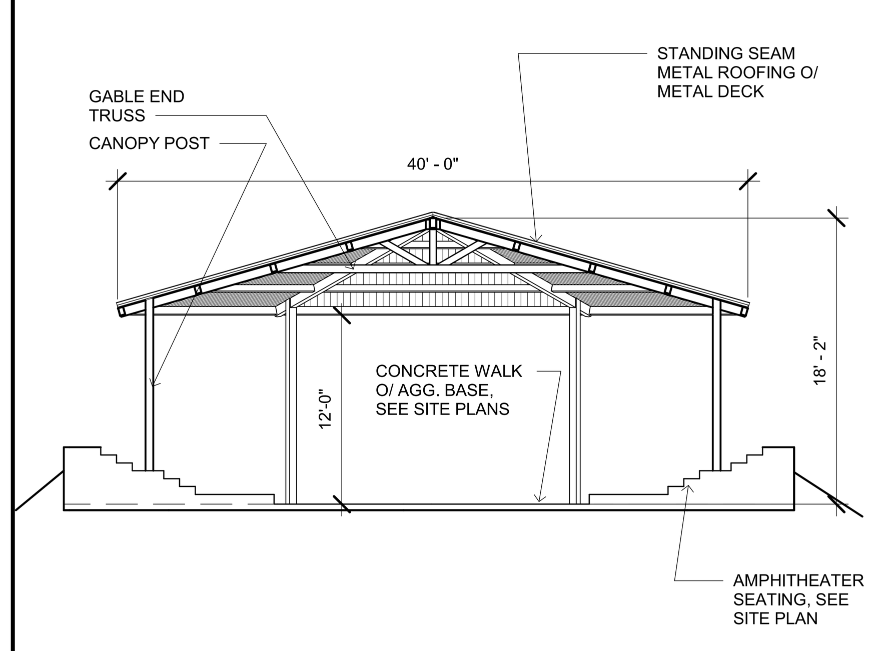

A064

CANOPY ELEVATION - AMPHITHEATER
SCALE: 1/8" = 1'-0" (12)

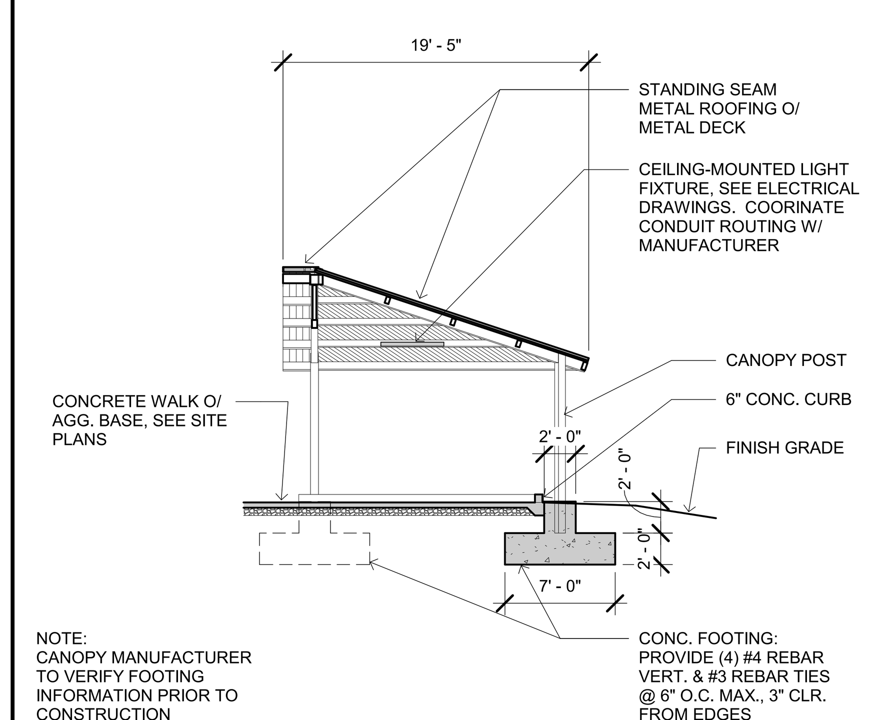

NOTE:
CANOPY MANUFACTURER TO VERIFY FOOTING INFORMATION PRIOR TO CONSTRUCTION

A064

CANOPY SECTION - AMPHITHEATER
SCALE: 1/8" = 1'-0" (8)

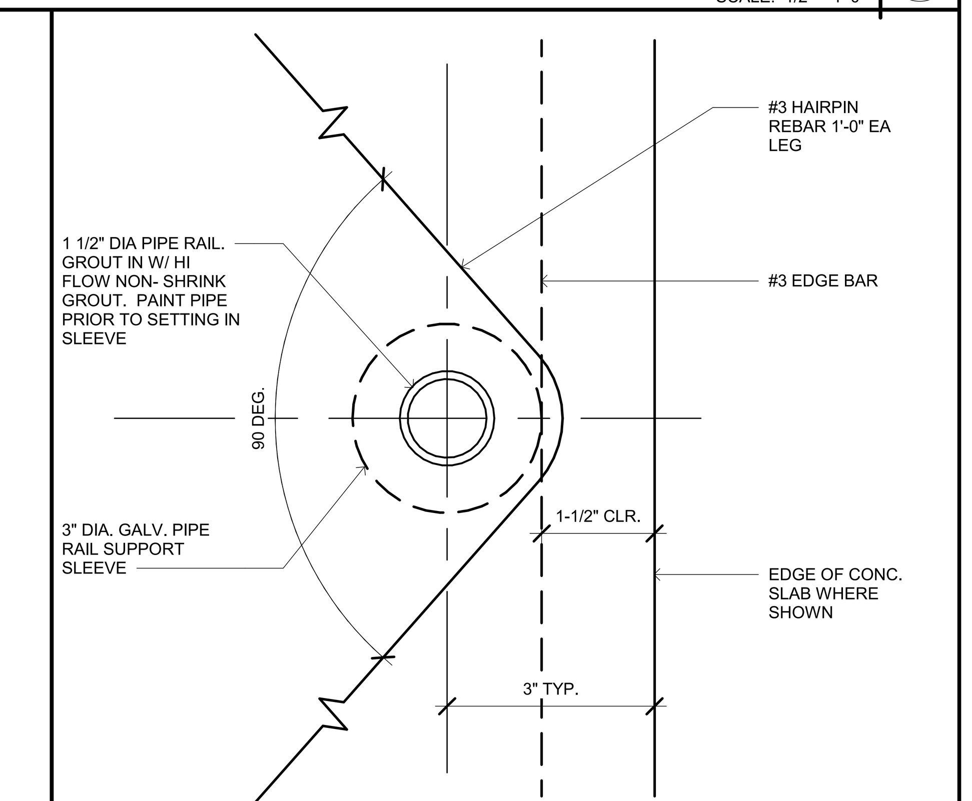

A064

HANDRAIL ANCHORAGE
SCALE: 6" = 1'-0" (4)

IDENTIFICATION STAMP
DIV. OF THE STATE ARCHITECT
APP: 02-118630 INC:
REVIEWED FOR
SS ☐ FLS ☐ ACS ☑
DATE: 04/13/2021

OFFICE OF THE STATE FIRE MARSHAL
APPROVED FIRE AND PANIC ONLY
Approval of this plan does not authorize or approve any omission or deviation from applicable regulations. Final approval is subject to field inspection. One set of approved plans shall be available on the project site at all times.
PERMIT NO.: 20-N-2332-CP
REVIEWED BY: LITO CATAYLO, OSFM
DATE: 4/1/2021

DGS GENERAL SERVICES
Department of General Services
State of California
Real Estate Services Division
Project Management & Development Branch
707 Third Street, Suite 4-105
West Sacramento, California 95605

NICHOLS MELBURG & ROSSETTO
ARCHITECTS + ENGINEERS
300 Knollcrest Drive
Redding, CA. 96002
(530) 222-3300 (530) 222-3538 FAX
http://www.nmrdesign.com

Copyright © 2020
All ideas, designs, arrangements and plans indicated or represented by this drawing are owned by, and the property of, NICHOLS, MELBURG and ROSSETTO and were created, evolved and developed for use on, and in conjunction with, the specified project. None of such ideas, designs, arrangements or plans shall be used by, or disclosed to any person, firm or corporation for any purpose whatsoever without the written permission of NICHOLS, MELBURG and ROSSETTO.

LICENSE STAMPS

LICENSED ARCHITECT KYLE MATTI C 27504 REN. 10/31/21 STATE OF CALIFORNIA

CONSULTANT

DRAWING STATUS
CONSTRUCTION DOCUMENTS

ISSUE

No.	Date	Description
1	10/20/2020	INITIAL PLAN REVIEW
2	01/22/2021	AGENCY RESUBMITTAL
3	03/22/2021	AGENCY RESUBMITTAL

If drawing is not 30" x 42" it is a reduced print

PROJECT
RESIDENTIAL CENTER, UKIAH: REPLACEMENT OF EXISTING RESIDENTIAL CENTER
440 EAST HILL ROAD
WILLITS, CALIFORNIA 95490
MENDOCINO COUNTY
CALIFORNIA CONSERVATION CORP

Supervisor	Designed	Drawn
KJM	DMH	Author

DSA Application No.
02-118630

SHEET TITLE
SITE DETAILS

DGS Project Number 000000000001826
NMR Project Number 18-6456

Reference North — NORTH
Sheet Scale: As indicated
Sheet Number: A064

ISSUE DATE
July 9, 2021

Plot Date: 3/19/2021 12:14:51 PM
File Name: BIM 360://CCC Willits Residential Center/A_CCC-WRC-COMMON.rvt

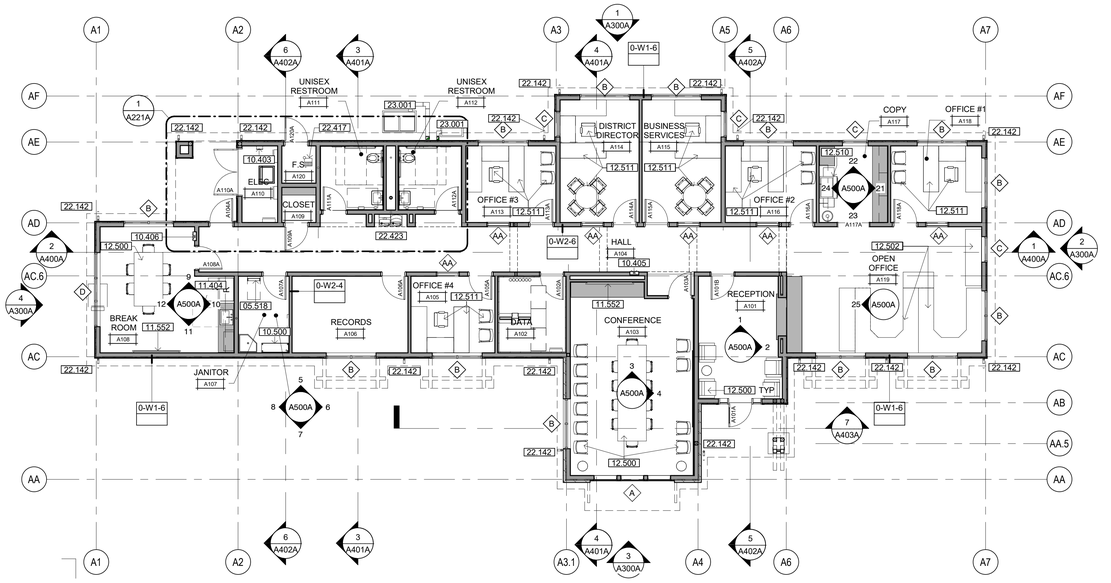

ADMINISTRATION BUILDING FLOOR PLAN

SCALE: 1/8" = 1'-0"

ADMINISTRATION BUILDING DIMENSION FLOOR PLAN

SCALE: 1/8" = 1'-0"

KEYNOTES

05.518	PIVOTAL SHIPS LADDER - SEE DETAIL 3/A931
10.403	SURFACE-MOUNTED FIRE EXTINGUISHER CABINET PER DETAIL 3A/A960
10.405	RECESSED FIRE EXTINGUISHER CABINET PER DETAIL 2A/A960
10.406	SEMI-RECESSED FIRE EXTINGUISHER CABINET PER DETAIL 2B/A960
10.500	METAL STORAGE SHELVING UNIT
11.404	REFRIGERATOR/FREEZER C.F.C.I. CONTRACTOR TO PROVIDE POWER/WATER CONNECTIONS TO UNIT. UNIT TO COMPLY WITH CBC 11B-804.6.6
11.552	WALL MOUNTED TELEVISION, C.F.C.I - SEE DETAIL 17/A960
12.500	FURNITURE-OFOI
12.502	SYSTEMS FURNITURE-OFCI
12.510	COPIER-OFOI
12.511	OFFICE FURNITURE-OFOI
22.142	RAINWATER LEADER - SEE PLUMBING PLANS
22.417	FLOOR SINK-FLUSH WITH FINISH FLOOR
22.423	ACCESSIBLE DRINKING FOUNTAIN HI-LO WITH BOTTLE FILL-SEE DETAIL 4/G212
23.001	MECHANICAL EQUIPMENT - SEE MECHANICAL DRAWINGS

GENERAL NOTES

A. FOR WALL ASSEMBLIES REFER TO GENERAL ASSEMBLIES, SHEET G121.
B. UNLESS OTHERWISE INDICATED, INTERIOR STUD FRAMED WALLS SHALL BE TYPE 0-2-6.
C. UNLESS OTHERWISE INDICATED, EXTERIOR STUD FRAMED WALLS SHALL BE TYPE 0-1-6.
D. SEE ENLARGED PLANS FOR WALL TYPES NOT INDICATED ON THIS PLAN.
E. REFER TO DETAIL 4/A961 FOR WALL INTERSECTION PRIORITIES.
F. SEE DOOR SCHEDULE, SHEET A710, FOR ADDITIONAL DOOR INFORMATION AND DIMENSIONS. ALL DOOR RATINGS SHALL MATCH OR EXCEED THE RATING OF THE WALL OR PARTITION IN WHICH THEY ARE INSTALLED.
G. SEE WINDOW SCHEDULE, SHEET A720, FOR ADDITIONAL WINDOW INFORMATION AND DIMENSIONS. ALL WINDOW RATINGS SHALL MATCH OR EXCEED THE RATING OF THE WALL OR PARTITION IN WHICH THEY ARE INSTALLED.
H. REFER TO STRUCTURAL NOTES SHEET S011 AND STRUCTURAL DETAIL SHEET S561 FOR TYPICAL WALL FRAMING DETAILS AND REQUIREMENTS
I. REFER TO SHEET A961 FOR HEAD OF WALL ASSEMBLIES
J. REFER TO FINISH SCHEDULE & INTERIOR ELEVATIONS FOR GYPSUM BOARD TYPE & LOCATIONS
K. ALL DIMENSIONS SHALL TAKE PRECEDENCE OVER SCALE SHOWN ON PLANS, SECTIONS AND DETAILS. DIMENSIONS MISSING FROM THE PLANS, OR NEEDED FOR EXECUTION OF WORK, SHALL BE PROVIDED OR CLARIFIED BY THE ARCHITECT BEFORE THE WORK IS INSTALLED. ERRORS RESULTING IN FAILURE TO COMPLY WITH THIS PROCEDURE SHALL BE CORRECTED BY, AND AT THE SOLE EXPENSE OF, THE CONTRACTOR. DIMENSIONS ARE TO FACE OF STUDS OR SLAB UNLESS NOTED OTHERWISE ON DRAWINGS. DO NOT SCALE DRAWINGS. DIMENSIONS NOTED AS "CLEAR" (CLR) ARE TAKEN TO THE FACE OF FINISH MATERIALS. THE CONTRACTOR SHALL VERIFY DIMENSIONS OF PREFABRICATED AND MANUFACTURED ITEMS AND COORDINATE ROUGH OPENINGS ACCORDINGLY.

1. ALL DIMENSIONS ARE TO FACE OF STUD, CENTERLINE OF COLUMNS, FACE OF CONCRETE
2. FINISH FLOOR DIMENSIONS ARE TO TOP OF CONCRETE OR OTHER HARD SURFACE
3. CEILING HEIGHT DIMENSIONS ARE TO FINISH SURFACES

FLOOR PLAN LEGEND

- DOOR WITH TAG - SEE SCHEDULE
- WINDOW WITH TAG - SEE SCHEDULE
- COUNTERTOP OVER CASEWORK - DASHED LINE INDICATES WALL MOUNTED CASEWORK ABOVE - SEE INTERIOR ELEVATIONS AND SCHEDULE
- RECESSED FIRE EXTINGUISHER & CABINET
- SINK / LAVATORY - SEE PLUMBING DRAWINGS
- TOILET - SEE PLUMBING DRAWINGS
- URINAL - SEE PLUMBING DRAWINGS
- DRINKING FOUNTAIN - SEE PLUMBING DRAWINGS

WALL TYPES LEGEND

SEE SHEET G121 FOR ASSEMBLY TYPES

EXTERIOR

2 x 6 WOOD STUD WALL - NON RATED	0-W1-6
2 x 12 WOOD STUD WALL - NON RATED	0-W1-12

INTERIOR

2 x 4 WOOD STUD WALL - NON RATED	0-W2-4
2 x 6 WOOD STUD WALL - NON RATED	0-W2-6
2 x 8 WOOD STUD WALL - NON RATED	0-W2-8
2 x 12 WOOD STUD WALL - NON RATED	0-W2-12
2 x 4 WOOD STUD WALL - ACOUSTIC	0-W5-4
2 x 6 WOOD STUD WALL - ACOUSTIC	0-W5-6
2 X 4 WOOD STUD WALL - 1-HR FIRE PARTITION W/ PROTECTED OPENINGS	1-W3-4
2 X 6 WOOD STUD WALL - 1-HR FIRE PARTITION W/ PROTECTED OPENINGS	1-W3-6

WALL TYPE NOTES

PARTITION SYMBOL

- FIRE-RESISTIVE RATING
- ASSEMBLY DETAIL NUMBER
- NOMINAL STUD SIZE
- # = SPECIAL CONDITIONS
- * = PARTITION HEIGHT

IDENTIFICATION STAMP
DIV. OF THE STATE ARCHITECT
APP: 02-118630 INC:
REVIEWED FOR
SS ☐ FLS ☐ ACS ☑
DATE: 04/13/2021

OFFICE OF THE STATE FIRE MARSHAL
APPROVED FIRE AND PANIC ONLY
Approval of this plan does not authorize or approve any omission or deviation from applicable regulations. Final approval is subject to field inspection. One set of approved plans shall be available on the project site at all times.
PERMIT NO. 20-N-2332-CP
REVIEWED BY: LEO CATAYLO, OSFM
DATE: 4/ /2021

DGS GENERAL SERVICES
Department of General Services
State of California
Real Estate Services Division
Project Management & Development Branch
707 Third Street, Suite 4-105
West Sacramento, California 95605

NICHOLS MELBURG & ROSSETTO ARCHITECTS + ENGINEERS
300 Knollcrest Drive
Redding, CA. 96002
(530) 222-3300 (530) 222-3538 FAX
http://www.nmrdesign.com

Copyright © 2020
All ideas, designs, arrangements and plans indicated or represented by this drawing are owned by, and the property of, NICHOLS, MELBURG and ROSSETTO and were created, evolved and developed for use on, and in conjunction with, the specified project. None of such ideas, designs, arrangements or plans shall be used by, or disclosed to any person, firm or corporation for any purpose whatsoever without the written permission of NICHOLS, MELBURG and ROSSETTO.

LICENSE STAMPS

LICENSED ARCHITECT — KYLE MATTHEW MELBURG — C-31504 — REN. 10/31/21 — STATE OF CALIFORNIA

CONSULTANT

DRAWING STATUS
CONSTRUCTION DOCUMENTS

ISSUE

No.	Date	Description
1	10/20/2020	INITIAL PLAN REVIEW
2	01/22/2021	AGENCY RESUBMITTAL
3	03/22/2021	AGENCY RESUBMITTAL

If drawing is not 30" x 42" it is a reduced print

PROJECT
RESIDENTIAL CENTER, UKIAH: REPLACEMENT OF EXISTING RESIDENTIAL CENTER
440 EAST HILL ROAD
WILLITS, CALIFORNIA 95490
MENDOCINO COUNTY
CALIFORNIA CONSERVATION CORPS

Supervisor	Designed	Drawn
KJM	DMH	Author

DSA Application No.
02-118630

SHEET TITLE
ADMINISTRATION FLOOR PLAN, DIMENSION PLAN

DGS Project Number	NMR Project Number
00000000001826	18-6456

Reference North | Sheet Scale: As indicated | Sheet Number: A201A

ISSUE DATE
July 9, 2021

Plot Date: 3/18/2021 5:54:52 PM
File Name: BIM 360://CCC-Willits Residential Center/A_CCC-WRC-ADMIN.rvt

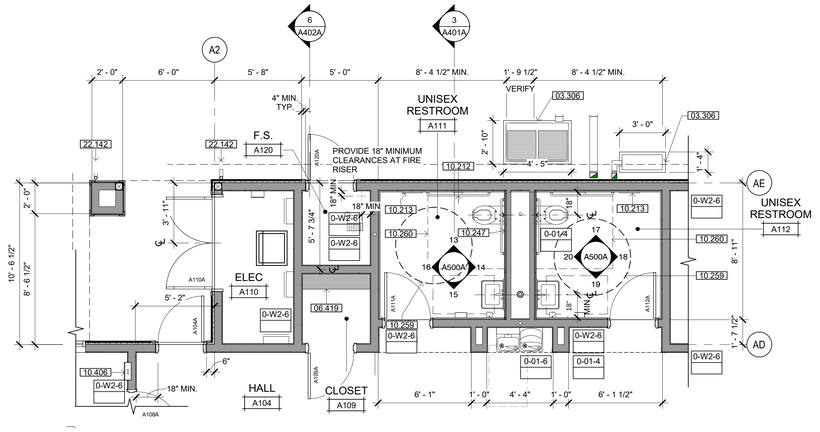

1 TOILET ROOMS

SCALE: 1/4" = 1'-0"

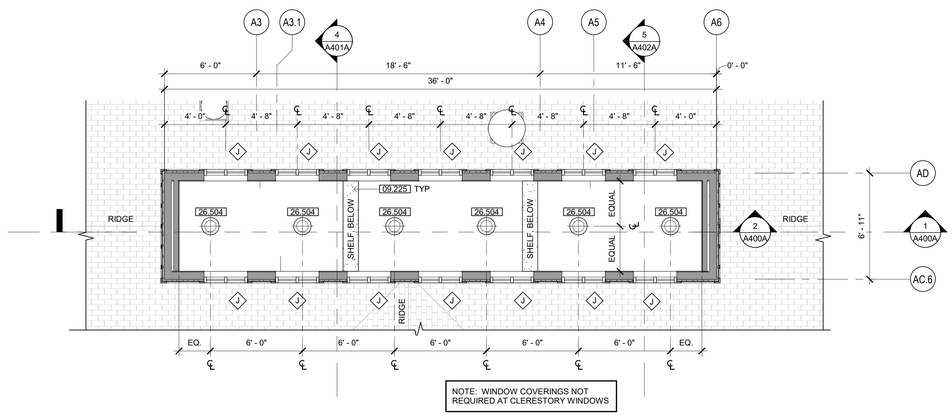

2 ADMINISTRATION BUILDING CLERESTORY PLAN

SCALE: 1/4" = 1'-0"

KEYNOTES

03.306	CONCRETE EQUIPMENT PAD
06.419	CLOSET SHELF AND HANGER ROD
09.225	GYPSUM BOARD WRAPPED SHELF
10.212	SEMI-RECESSED TOILET TISSUE DISPENSER
10.213	SURFACE MOUNTED TOILET SEAT COVER DISPENSER
10.247	GRAB BARS, 48" AT SIDE & 42" AT BACK - SEE DETAIL 4/A960
10.259	60" DIAMETER TURNING RADIUS
10.260	56" X 60" CLEAR FLOOR SPACE
10.406	SEMI-RECESSED FIRE EXTINGUISHER CABINET PER DETAIL 2/8/A960
22.142	RAINWATER LEADER - SEE PLUMBING PLANS
26.504	PENDANT LIGHT FIXTURE

GENERAL NOTES

A. FOR WALL ASSEMBLIES REFER TO GENERAL ASSEMBLIES, SHEET G121.
B. UNLESS OTHERWISE INDICATED, INTERIOR STUD FRAMED WALLS SHALL BE TYPE 0-2-6.
C. UNLESS OTHERWISE INDICATED, EXTERIOR STUD FRAMED WALLS SHALL BE TYPE 0-1-6.
D. SEE ENLARGED PLANS FOR WALL TYPES NOT INDICATED ON THIS PLAN.
E. REFER TO DETAIL 4/A961 FOR WALL INTERSECTION PRIORITIES.
F. SEE DOOR SCHEDULE, SHEET A710, FOR ADDITIONAL DOOR INFORMATION AND DIMENSIONS. ALL DOOR RATINGS SHALL MATCH OR EXCEED THE RATING OF THE WALL OR PARTITION IN WHICH THEY ARE INSTALLED.
G. SEE WINDOW SCHEDULE, SHEET A720, FOR ADDITIONAL WINDOW INFORMATION AND DIMENSIONS. ALL WINDOW RATINGS SHALL MATCH OR EXCEED THE RATING OF THE WALL OR PARTITION IN WHICH THEY ARE INSTALLED.
H. REFER TO STRUCTURAL NOTES SHEET S011 AND STRUCTURAL DETAIL SHEET S561 FOR TYPICAL WALL FRAMING DETAILS AND REQUIREMENTS
I. REFER TO SHEET A061 FOR HEAD OF WALL ASSEMBLIES
J. REFER TO FINISH SCHEDULE & INTERIOR ELEVATIONS FOR GYPSUM BOARD TYPE & LOCATIONS
K. ALL DIMENSIONS SHALL TAKE PRECEDENCE OVER SCALE SHOWN ON PLANS, SECTIONS AND DETAILS. DIMENSIONS MISSING FROM THE PLANS, OR NEEDED FOR EXECUTION OF WORK, SHALL BE PROVIDED OR CLARIFIED BY THE ARCHITECT BEFORE THE WORK IS INSTALLED. ERRORS RESULTING IN FAILURE TO COMPLY WITH THIS PROCEDURE SHALL BE CORRECTED BY, AND AT THE SOLE EXPENSE OF, THE CONTRACTOR. DIMENSIONS ARE TO FACE OF STUDS OR SLAB UNLESS NOTED OTHERWISE ON DRAWINGS. DO NOT SCALE DRAWINGS. DIMENSIONS NOTED AS "CLEAR" (CLR) ARE TAKEN TO THE FACE OF FINISH MATERIALS. THE CONTRACTOR SHALL VERIFY DIMENSIONS OF PREFABRICATED AND MANUFACTURED ITEMS AND COORDINATE ROUGH OPENINGS ACCORDINGLY.

1. ALL DIMENSIONS ARE TO FACE OF STUD, CENTERLINE OF COLUMNS, FACE OF CONCRETE
2. FINISH FLOOR DIMENSIONS ARE TO TOP OF CONCRETE OR OTHER HARD SURFACE
3. CEILING HEIGHT DIMENSIONS ARE TO FINISH SURFACES

FLOOR PLAN LEGEND

- DOOR WITH TAG - SEE SCHEDULE
- WINDOW WITH TAG - SEE SCHEDULE
- COUNTERTOP OVER CASEWORK - DASHED LINE INDICATES WALL MOUNTED CASEWORK ABOVE - SEE INTERIOR ELEVATIONS AND SCHEDULE
- RECESSED FIRE EXTINGUISHER & CABINET
- SINK / LAVATORY - SEE PLUMBING DRAWINGS
- TOILET - SEE PLUMBING DRAWINGS
- URINAL - SEE PLUMBING DRAWINGS
- DRINKING FOUNTAIN - SEE PLUMBING DRAWINGS

WALL TYPES LEGEND

SEE SHEET G121 FOR ASSEMBLY TYPES

EXTERIOR

2 x 6 WOOD STUD WALL - NON RATED	0-W1-6 * ◆ #
2 x 12 WOOD STUD WALL - NON RATED	0-W1-12 * ◆ #

INTERIOR

2 x 4 WOOD STUD WALL - NON RATED	0-W2-4 * ◆ #
2 x 6 WOOD STUD WALL - NON RATED	0-W2-6 * ◆ #
2 x 8 WOOD STUD WALL - NON RATED	0-W2-8 * ◆ #
2 x 12 WOOD STUD WALL - NON RATED	0-W2-12 * ◆ #
2 x 4 WOOD STUD WALL - ACOUSTIC	0-W5-4 * ◆ #
2 x 6 WOOD STUD WALL - ACOUSTIC	0-W5-6 * ◆ #
2 X 4 WOOD STUD WALL - 1-HR FIRE PARTITION W/ PROTECTED OPENINGS	1-W3-4 * ◆ #
2 X 6 WOOD STUD WALL - 1-HR FIRE PARTITION W/ PROTECTED OPENINGS	1-W3-6 * ◆ #

WALL TYPE NOTES

PARTITION SYMBOL

- FIRE-RESISTIVE RATING
- ASSEMBLY DETAIL NUMBER
- NOMINAL STUD SIZE
- # = SPECIAL CONDITIONS
- * = PARTITION HEIGHT

IDENTIFICATION STAMP
DIV. OF THE STATE ARCHITECT
APP: 02-118630 INC:
REVIEWED FOR
SS ☐ FLS ☐ ACS ☑
DATE: 04/13/2021

OFFICE OF THE STATE FIRE MARSHAL
APPROVED FIRE AND PANIC ONLY
Approval of this plan does not authorize or approve any omission or deviation from applicable regulations. Final approval is subject to field inspection. One set of approved plans shall be available on the project site at all times.
PERMIT NO. 20-N-2332-CP
REVIEWED BY: LEO CATAYLO, OSFM
DATE: 4/ /2021

DGS GENERAL SERVICES
Department of General Services
State of California
Real Estate Services Division
Project Management & Development Branch
707 Third Street, Suite 4-105
West Sacramento, California 95605

NICHOLS MELBURG & ROSSETTO ARCHITECTS + ENGINEERS
300 Knollcrest Drive
Redding, CA. 96002
(530) 222-3300 (530) 222-3538 FAX
http://www.nmrdesign.com

Copyright © 2020
All ideas, designs, arrangements and plans indicated or represented by this drawing are owned by, and the property of, NICHOLS, MELBURG and ROSSETTO and were created, evolved and developed for use on, and in conjunction with, the specified project. None of such ideas, designs, arrangements or plans shall be used by, or disclosed to any person, firm or corporation for any purpose whatsoever without the written permission of NICHOLS, MELBURG and ROSSETTO.

LICENSE STAMPS

LICENSED ARCHITECT KYLE MATTY C-32504 REN. 10/31/21 STATE OF CALIFORNIA

CONSULTANT

DRAWING STATUS
CONSTRUCTION DOCUMENTS

ISSUE

No.	Date	Description
1	10/20/2020	INITIAL PLAN REVIEW
2	01/22/2021	AGENCY RESUBMITTAL
3	03/22/2021	AGENCY RESUBMITTAL

If drawing is not 30" x 42" it is a reduced print

PROJECT
RESIDENTIAL CENTER, UKIAH: REPLACEMENT OF EXISTING RESIDENTIAL CENTER
440 EAST HILL ROAD
WILLITS, CALIFORNIA 95490
MENDOCINO COUNTY
CALIFORNIA CONSERVATION CORPS

Supervisor	Designed	Drawn
KJM	DMH	Author

DSA Application No.
02-118630

SHEET TITLE
ADMINISTRATION ENLARGED FLOOR PLANS

DGS Project Number	NMR Project Number
000000000001826	18-6456

Reference North: NORTH
Sheet Scale: As indicated
Sheet Number: A221A

ISSUE DATE
July 9, 2021

Plot Date: 3/19/2021 3:54:57 PM
File Name: 18M 2003 /CCC-Willits Residential Center/A_CCC-WRC-ADMIN.rvt

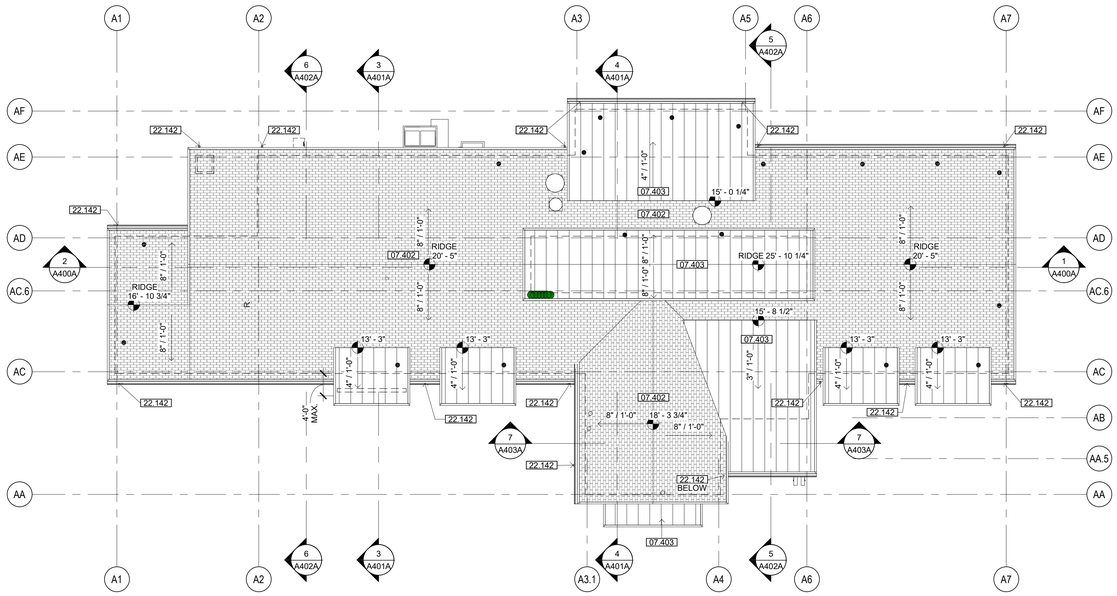

NORTH

ADMINISTRATION BUILDING ROOF PLAN

SCALE: 1/8" = 1'-0"

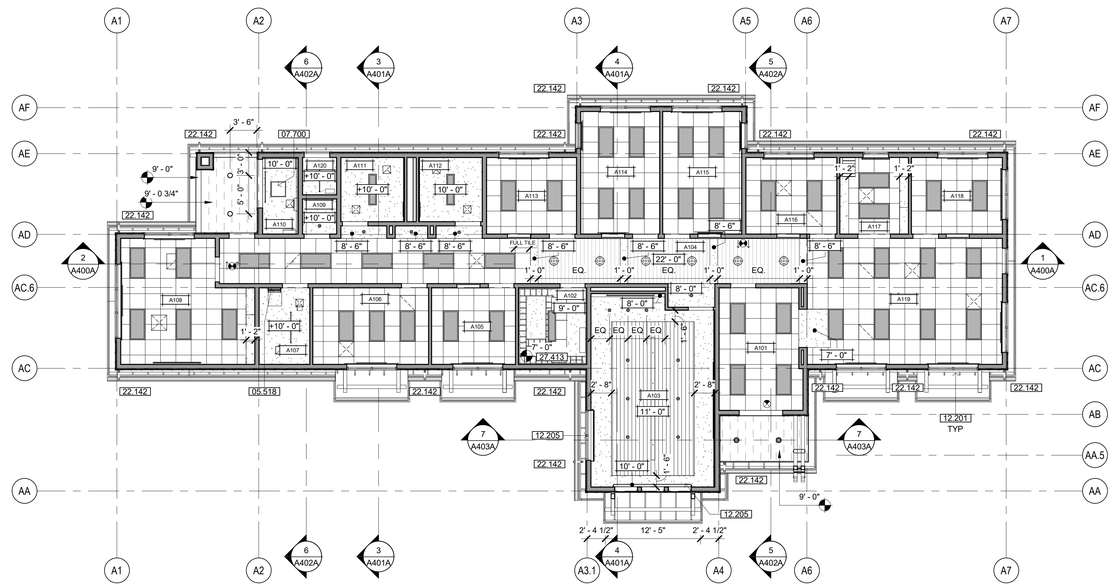

NORTH

ADMINISTRATION BUILDING FIRST FLOOR RCP

SCALE: 1/8" = 1'-0"

ROOF PLAN NOTES

A. ALL PIPE PENETRATIONS NOT SHOWN. SEE MECHANICAL & PLUMBING DRAWINGS FOR LOCATION INFORMATION, SEE ROOF PIPE PENETRATION DETAIL 5/A810.

B. HVAC CONDENSATE DRAIN PIPES NOT SHOWN. SEE MECHANICAL & PLUMBING DRAWINGS FOR REQUIREMENTS.

ROOF PLAN LEGEND

REFER TO DRAWING G120 FOR TYPICAL ROOF CONSTRUCTION ASSEMBLIES

- ASPHALT SHINGLE ROOFING - SEE SHEET A810
- PREFINISHED METAL ROOFING - SEE SHEET A810

GENERAL RCP NOTES

A. ACOUSTICAL CEILING HEIGHTS 9'-0" U.O.N.

B. GYPSUM BOARD CEILING IS AT UNDERSIDE OF STRUCTURAL FRAMING U.O.N.

C. REFER TO MECHANICAL, FIRE PROTECTION, ELECTRICAL, SECURITY, AND AUDIOVISUAL DRAWINGS FOR ADDITIONAL CONSTRUCTION FEATURES, SYSTEMS, FIXTURES, AND EQPT. LOCATED IN, ON, AND ABOVE CEILINGS. TO THE EXTENT THAT THESE ITEMS ARE SHOWN ON REFLECTED CEILING PLANS, THEY ARE FOR GENERAL INFORMATION AND LAYOUT PURPOSES ONLY, AND DO NOT NECESSARILY REPRESENT ACTUAL SCOPE OR QUANTITIES REQUIRED FOR THE PROJECT. ALL QUANTITIES TO BE VERIFIED.

D. AT ACOUSTICAL TILE CEILINGS, ALL FIXTURES AND EQUIPMENT SHALL BE CENTERED WITHIN ACOUSTICAL CEILING TILES, IN BOTH DIRECTIONS.

E. SPRINKLER HEAD LOCATIONS SHALL RESULT IN A UNIFORM AND REPETITIVE PATTERN FOR EACH AREA, AND SHALL BE LOCATED SYMMETRICALLY WITH RESPECT TO WALLS, CEILING GRID PATTERNS, AND LIGHT FIXTURES. SPRINKLER HEADS IN ACOUSTICAL TILE CEILINGS SHALL BE LOCATED IN THE CENTERS OF THE CEILING TILES.

F. TYP. EXTERIOR SOFFIT HEIGHT IS AT UNDERSIDE OF STRUCTURAL FRAMING U.O.N.

KEYNOTES

05.518	PIVOTAL SHIPS LADDER - SEE DETAIL 3/A931
07.402	COMPOSITION SHINGLE ROOFING
07.403	STANDING SEAM METAL ROOF SYSTEM, FACTORY PRE-FINISHED
07.700	ACCESS HATCH - REFER TO 12/A931
12.201	SINGLE ROLL WINDOW SHADE, MANUAL. SEE DETAIL 18/A961
12.205	DOUBLE ROLL WINDOW SHADE, MOTORIZED. SEE DETAIL 20/A961
22.142	RAINWATER LEADER - SEE PLUMBING PLANS
27.413	CABLE TRAY

RCP LEGEND

REFER TO DRAWING G120 FOR TYPICAL CEILING CONSTRUCTION ASSEMBLIES

- 2' x 2' SUSPENDED ACOUSTICAL TILE CEILING SYSTEM — C 3
- 5/8" GYPSUM BOARD CEILING — C 2
- SUSPENDED WOOD CEILING — C 4
- EXTERIOR FIBER CEMENT SOFFIT, NON-VENTED
- +X'-X" — INDICATES HEIGHT OF FINISHED CEILING OR SOFFIT (FROM REFERENCE FLOOR ELEVATION)
- 2'x4' LAY-IN LIGHT FIXTURE - SEE ELECTRICAL DRAWINGS
- 1'x4' LAY-IN LIGHT FIXTURE - SEE ELECTRICAL DRAWINGS
- 48" STRIP LIGHT FIXTURE - SEE ELECTRICAL DRAWINGS
- SUSPENDED LIGHT FIXTURE - SEE ELECTRICAL DRAWINGS
- 1'x4' SURFACE MOUNTED LIGHT FIXTURE - SEE ELECTRICAL DRAWINGS
- 6" DIAMETER RECESSED CAN LIGHT FIXTURE - SEE ELECTRICAL DRAWINGS
- LINEAR LIGHT FIXTURE - SEE ELECTRICAL DRAWINGS
- 8" DIAMETER PENDANT LIGHT FIXTURE - SEE ELECTRICAL DRAWINGS
- SUPPLY AIR DIFFUSERS - SEE MECHANICAL DRAWINGS
- RETURN AIR DIFFUSER - SEE MECHANICAL DRAWINGS
- EXHAUST - SEE MECHANICAL DRAWINGS
- LINEAR SLOT DIFFUSER - SEE MECHANICAL DRAWINGS

IDENTIFICATION STAMP
DIV. OF THE STATE ARCHITECT
APP: 02-118630 INC:
REVIEWED FOR
SS ☐ FLS ☐ ACS ☑
DATE: 04/13/2021

OFFICE OF THE STATE FIRE MARSHAL
APPROVED FIRE AND PANIC ONLY
Approval of this plan does not authorize or approve any omission or deviation from applicable regulations. Final approval is subject to field inspection. One set of approved plans shall be available on the project site at all times.
PERMIT NO. 20-N-2332-CP
REVIEWED BY: LEO CATAYLO, OSFM
DATE: 4 / /2021

DGS GENERAL SERVICES
Department of General Services
State of California
Real Estate Services Division
Project Management & Development Branch
707 Third Street, Suite 4-105
West Sacramento, California 95605

NICHOLS MELBURG & ROSSETTO ARCHITECTS + ENGINEERS
300 Knollcrest Drive
Redding, CA. 96002
(530) 222-3300 (530) 222-3538 FAX
http://www.nmrdesign.com

Copyright © 2020
All ideas, designs, arrangements and plans indicated or represented by this drawing are owned by, and the property of, NICHOLS, MELBURG and ROSSETTO and were created, evolved and developed for use on, and in conjunction with, the specified project. None of such ideas, designs, arrangements or plans shall be used by, or disclosed to any person, firm or corporation for any purpose whatsoever without the written permission of NICHOLS, MELBURG and ROSSETTO

LICENSE STAMPS

LICENSED ARCHITECT KYLE MATTY C-21504 RENEWAL 10/31/21 STATE OF CALIFORNIA

CONSULTANT

DRAWING STATUS
CONSTRUCTION DOCUMENTS

ISSUE

No.	Date	Description
1	10/20/2020	INITIAL PLAN REVIEW
2	01/22/2021	AGENCY RESUBMITTAL
3	03/22/2021	AGENCY RESUBMITTAL

If drawing is not 30" x 42" it is a reduced print

PROJECT
RESIDENTIAL CENTER, UKIAH: REPLACEMENT OF EXISTING RESIDENTIAL CENTER
440 EAST HILL ROAD
WILLITS, CALIFORNIA 95490
MENDOCINO COUNTY
CALIFORNIA CONSERVATION CORPS

Supervisor	Designed	Drawn
KJM	DMH	PW

DSA Application No.
02-118630

SHEET TITLE
ADMINISTRATION ROOF PLAN, REFLECTED CEILING PLAN

DGS Project Number	NMR Project Number
000000000001826	18-6456

Reference North: NORTH
Sheet Scale: As indicated
Sheet Number: A240A

ISSUE DATE
July 9, 2021

Plot Date: 3/19/2021 3:55:13 PM
File Name: 1814.300 CCC Willits Residential Center\A_CCC-WRC-ADMIN.rvt

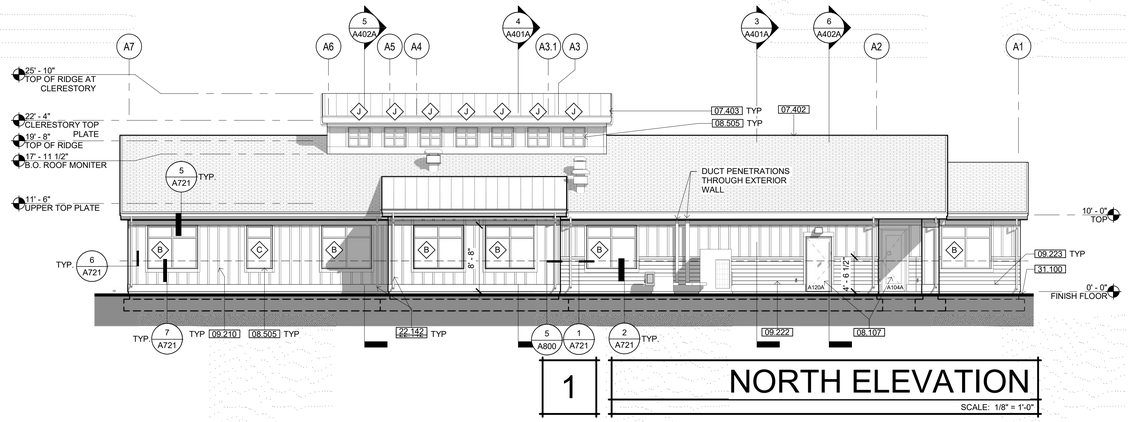

1 NORTH ELEVATION

SCALE: 1/8" = 1'-0"

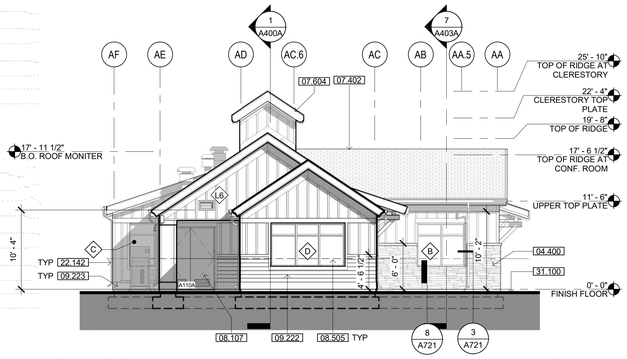

4 WEST ELEVATION

SCALE: 1/8" = 1'-0"

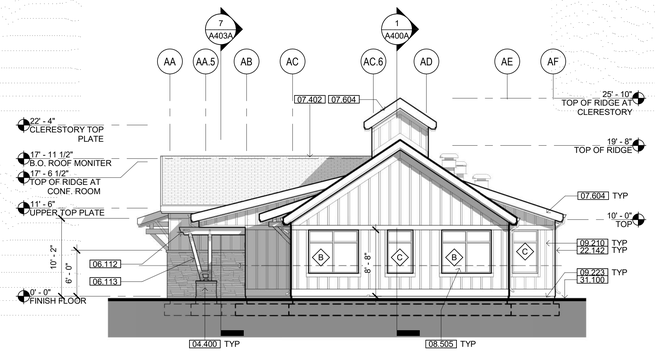

2 EAST ELEVATION

SCALE: 1/8" = 1'-0"

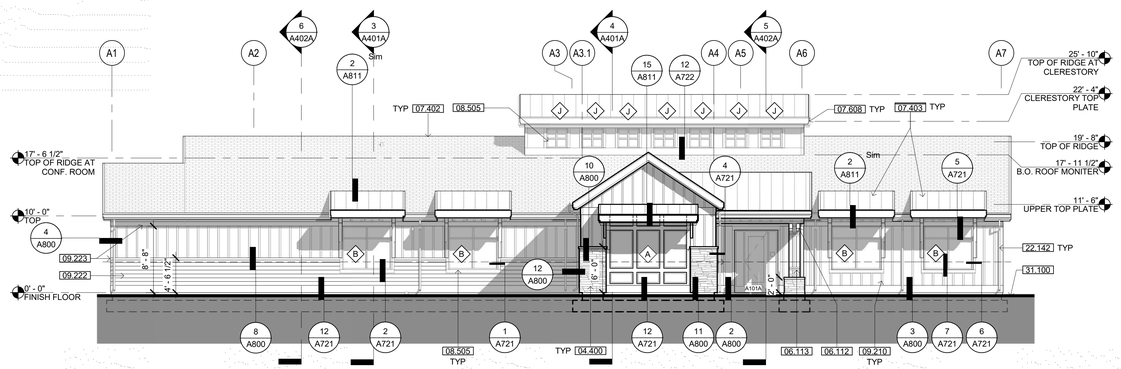

3 SOUTH ELEVATION

SCALE: 1/8" = 1'-0"

KEYNOTES

04.400	ADHERED STONE VENEER WAINSCOT
06.112	HEAVY TIMBER BEAM, PAINTED
06.113	HEAVY TIMBER COLUMN, PAINTED
07.402	COMPOSITION SHINGLE ROOFING
07.403	STANDING SEAM METAL ROOF SYSTEM, FACTORY PRE-FINISHED
07.604	FASCIA & TRIM, PAINTED
07.608	SEAMLESS RAINWATER GUTTER SYSTEM, PAINTED
08.107	INSULATED METAL DOOR IN HOLLOW METAL FRAME, PAINTED
08.505	DUAL-GLAZED VINYL WINDOWS
09.210	FIBER CEMENT BATTENS O/ FIBER CEMENT SIDING PANELS O/ RIGID INSULATION
09.222	FIBER CEMENT LAP SIDING SYSTEM O/ RIGID INSULATION
09.223	FIBER CEMENT TRIM
22.142	RAINWATER LEADER - SEE PLUMBING PLANS
31.100	APPROXIMATE FINISH GRADE

IDENTIFICATION STAMP
DIV. OF THE STATE ARCHITECT
APP: 02-118630 INC:
REVIEWED FOR
SS ☐ FLS ☐ ACS ☑
DATE: 04/13/2021

OFFICE OF THE STATE FIRE MARSHAL
APPROVED FIRE AND PANIC ONLY
Approval of this plan does not authorize or approve any omission or deviation from applicable regulations. Final approval is subject to field inspection. One set of approved plans shall be available on the project site at all times.
PERMIT NO. 20-N-2332-CP
REVIEWED BY: LEO CATAYLO, OSFM
DATE: 4 / /2021

DGS GENERAL SERVICES
Department of General Services
State of California
Real Estate Services Division
Project Management & Development Branch
707 Third Street, Suite 4-105
West Sacramento, California 95605

NICHOLS MELBURG & ROSSETTO ARCHITECTS + ENGINEERS
300 Knollcrest Drive
Redding, CA. 96002
(530) 222-3300 (530) 222-3538 FAX
http://www.nmrdesign.com

Copyright © 2020
All ideas, designs, arrangements and plans indicated or represented by this drawing are owned by, and the property of, NICHOLS, MELBURG and ROSSETTO and were created, evolved and developed for use on, and in conjunction with, the specified project. None of such ideas, designs, arrangements or plans shall be used by, or disclosed to any person, firm or corporation for any purpose whatsoever without the written permission of NICHOLS, MELBURG and ROSSETTO.

LICENSE STAMPS

LICENSED ARCHITECT KYLE MATTHEW MELBURG 21504 REN. 10/31/21 STATE OF CALIFORNIA

CONSULTANT

DRAWING STATUS
CONSTRUCTION DOCUMENTS

ISSUE

No.	Date	Description
1	10/20/2020	INITIAL PLAN REVIEW
2	01/22/2021	AGENCY RESUBMITTAL
3	03/22/2021	AGENCY RESUBMITTAL

If drawing is not 30" x 42" it is a reduced print

PROJECT
RESIDENTIAL CENTER, UKIAH: REPLACEMENT OF EXISTING RESIDENTIAL CENTER
440 EAST HILL ROAD
WILLITS, CALIFORNIA 95490
MENDOCINO COUNTY
CALIFORNIA CONSERVATION CORPS

Supervisor	Designed	Drawn
KJM	DMH	Author

DSA Application No.
02-118630

SHEET TITLE
ADMINISTRATION
EXTERIOR
ELEVATIONS

DGS Project Number
000000000001826
NMR Project Number
18-6456

Reference North
Sheet Scale
1/8" = 1'-0"
Sheet Number
A300A

ISSUE DATE
July 9, 2021

Plot Date: 3/18/2021 5:56:20 PM
File Name: BIM 360://CCC Willits Residential Center/A_CCC-WRC-ADMIN.rvt

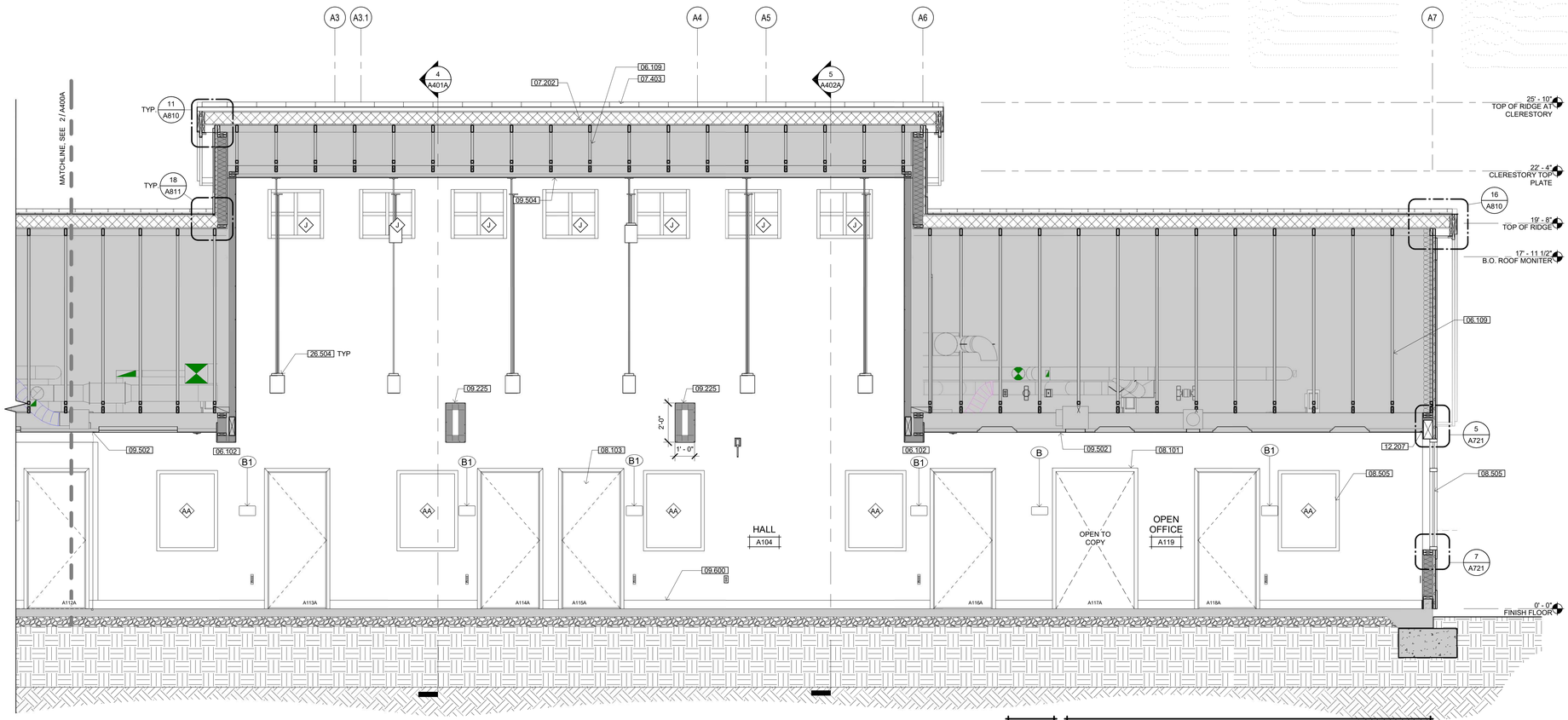

1 BUILDING SECTION

SCALE: 3/8" = 1'-0"

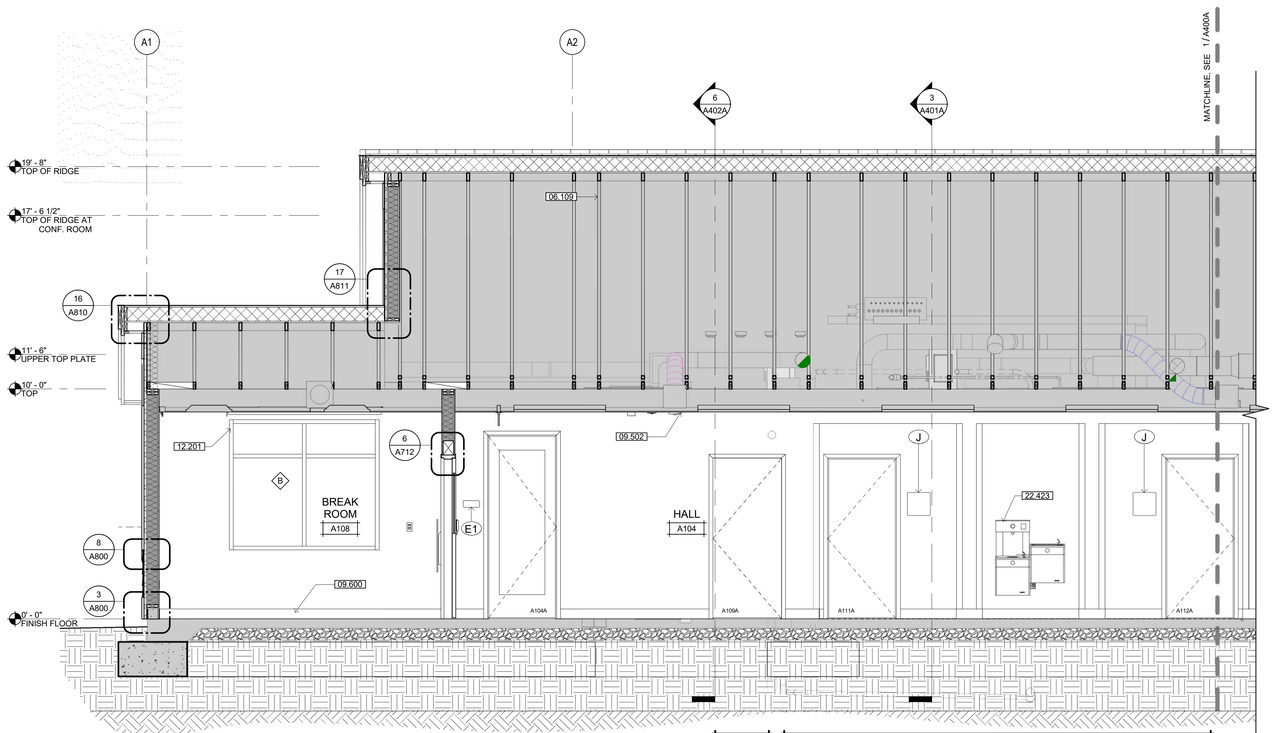

2 BUILDING SECTION

SCALE: 3/8" = 1'-0"

KEYNOTES

06.102	2X JOIST FRAMING
06.109	WOOD FRAMED TRUSS
07.202	RIGID INSULATION
07.403	STANDING SEAM METAL ROOF SYSTEM, FACTORY PRE-FINISHED
08.101	HOLLOW METAL FRAME
08.103	HOLLOW METAL DOOR & FRAME-SEE DOOR SCHEDULE
08.505	DUAL-GLAZED VINYL WINDOWS
09.225	GYPSUM BOARD WRAPPED SHELF
09.502	SUSPENDED ACUSTICAL CEILING SYSTEM
09.504	SUSPENDED WOOD CEILING
09.600	BASE-SEE FINISH SCHEDULE
12.201	SINGLE ROLL WINDOW SHADE, MANUAL. SEE DETAIL 18/A961
12.207	SINGLE ROLL WINDOW SHADE, MANUAL. SEE DETAIL 17/A961
22.423	ACCESSIBLE DRINKING FOUNTAIN HI-LO WITH BOTTLE FILL-SEE DETAIL 4/G212
26.504	PENDANT LIGHT FIXTURE

IDENTIFICATION STAMP
DIV. OF THE STATE ARCHITECT
APP: 02-118630 INC:
REVIEWED FOR
SS ☐ FLS ☐ ACS ☑
DATE: 04/13/2021

OFFICE OF THE STATE FIRE MARSHAL
APPROVED FIRE AND PANIC ONLY
Approval of this plan does not authorize or approve any omission or deviation from applicable regulations. Final approval is subject to field inspection. One set of approved plans shall be available on the project site at all times.
PERMIT NO. 20-N-2332-CP
REVIEWED BY: LEO CATAYLO, OSFM
DATE: 4 / /2021

DGS GENERAL SERVICES
Department of General Services
State of California
Real Estate Services Division
Project Management & Development Branch
707 Third Street, Suite 4-105
West Sacramento, California 95605

NICHOLS MELBURG & ROSSETTO
ARCHITECTS + ENGINEERS
300 Knollcrest Drive
Redding, CA. 96002
(530) 222-3300 (530) 222-3538 FAX
http://www.nmrdesign.com

Copyright © 2020
All ideas, designs, arrangements and plans indicated or represented by this drawing are owned by, and the property of, NICHOLS, MELBURG and ROSSETTO and were created, evolved and developed for use on, and in conjunction with, the specified project. None of such ideas, designs, arrangements or plans shall be used by, or disclosed to any person, firm or corporation for any purpose whatsoever without the written permission of NICHOLS, MELBURG and ROSSETTO

LICENSE STAMPS

LICENSED ARCHITECT KYLE MATTY C-27504 REN. 10/31/21 STATE OF CALIFORNIA

CONSULTANT

DRAWING STATUS
CONSTRUCTION DOCUMENTS

ISSUE

No.	Date	Description
1	10/20/2020	INITIAL PLAN REVIEW
2	01/22/2021	AGENCY RESUBMITTAL
3	03/22/2021	AGENCY RESUBMITTAL

If drawing is not 30" x 42" it is a reduced print

PROJECT
RESIDENTIAL CENTER, UKIAH: REPLACEMENT OF EXISTING RESIDENTIAL CENTER
440 EAST HILL ROAD
WILLITS, CALIFORNIA 95490
MENDOCINO COUNTY
CALIFORNIA CONSERVATION CORPS

Supervisor	Designed	Drawn
KJM	DMH	Author

DSA Application No.
02-118630

SHEET TITLE
ADMINISTRATION BUILDING SECTIONS

DGS Project Number	NMR Project Number
00000000001826	18-6456

Reference North | Sheet Scale 3/8" = 1'-0"
Sheet Number A400A

ISSUE DATE
July 9, 2021

Plot Date: 2/16/2021 5:57:16 PM
File Name: BIM 360://CCC Willits Residential Center/A_CCC-WRC-ADMIN.rvt

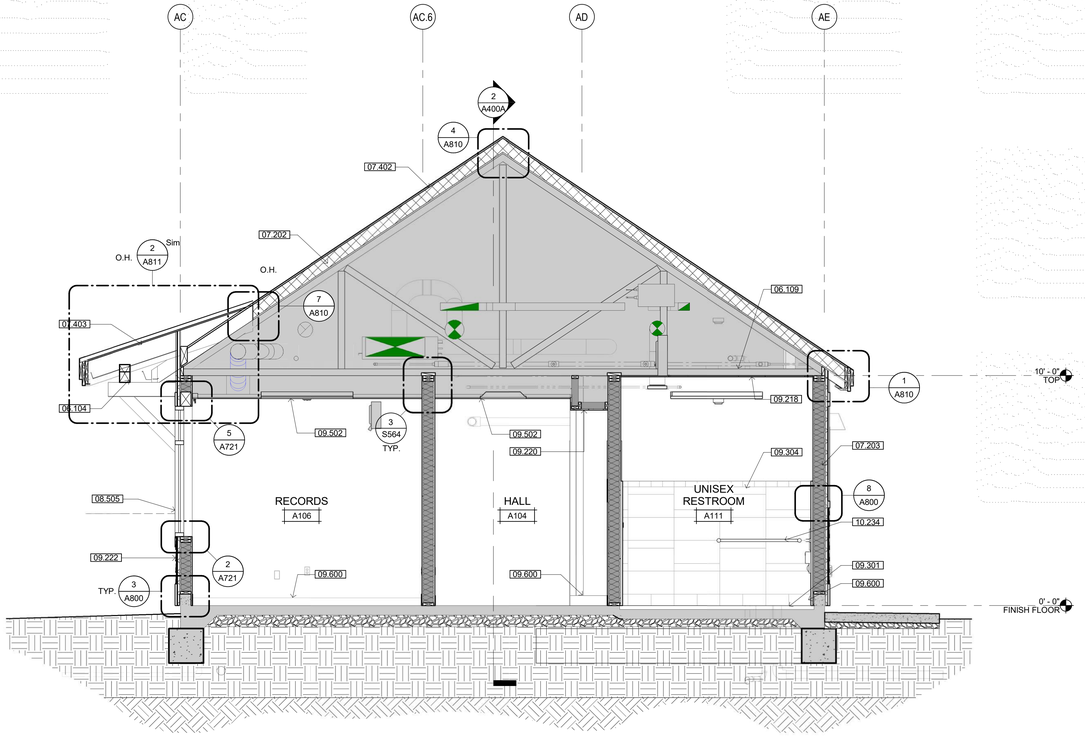

3 BUILDING SECTION

SCALE: 3/8" = 1'-0"

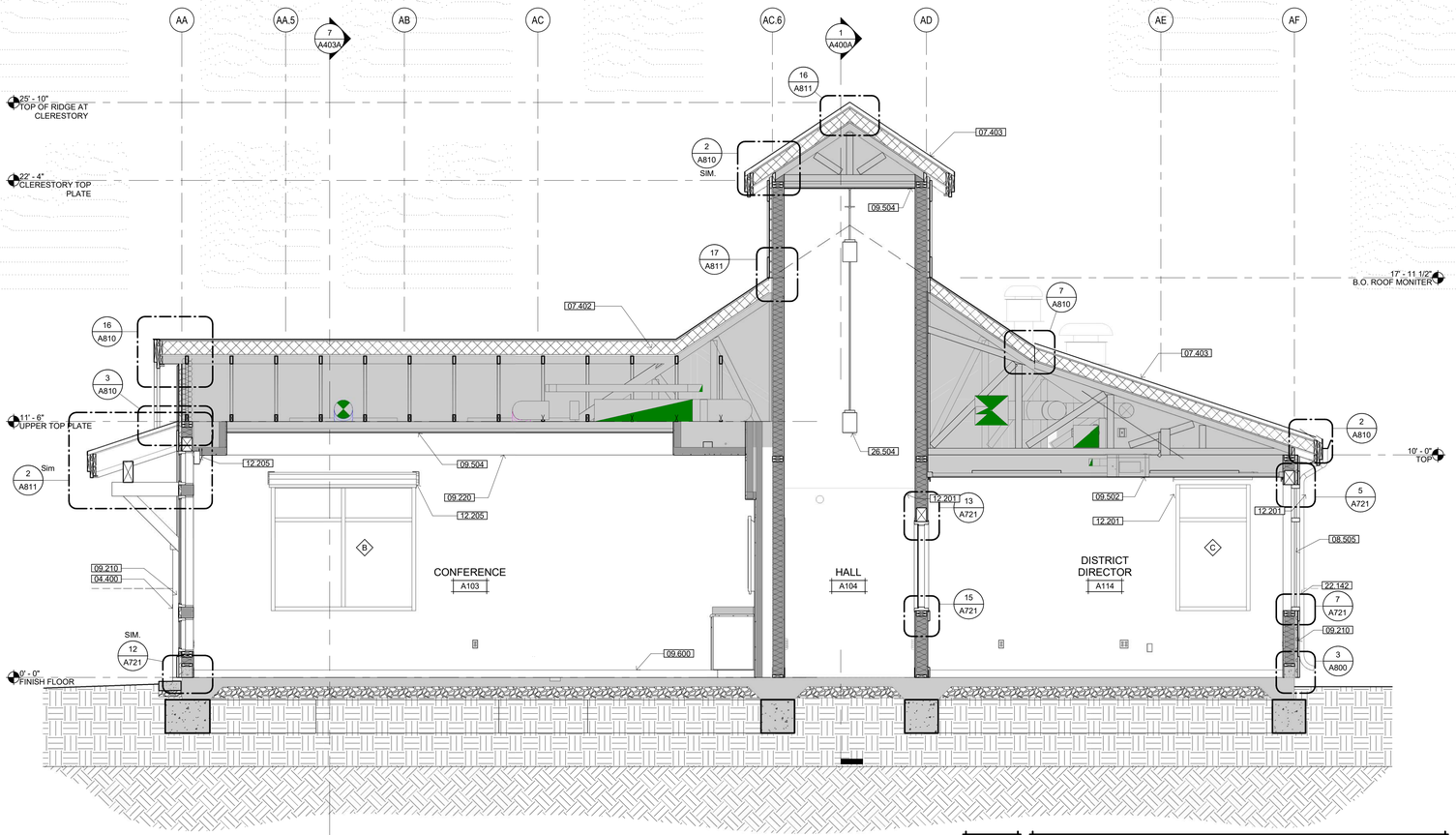

4 BUILDING SECTION

SCALE: 3/8" = 1'-0"

KEYNOTES

04.400	ADHERED STONE VENEER WAINSCOT
06.104	HEAVY TIMBER KNEE BRACE, PAINTED
06.109	WOOD FRAMED TRUSS
07.202	RIGID INSULATION
07.203	BATT INSULATION
07.402	COMPOSITION SHINGLE ROOFING
07.403	STANDING SEAM METAL ROOF SYSTEM, FACTORY PRE-FINISHED
08.505	DUAL-GLAZED VINYL WINDOWS
09.210	FIBER CEMENT BATTENS O/ FIBER CEMENT SIDING PANELS O/ RIGID INSULATION
09.218	GYPSUM BOARD CEILING ATTACHED TO BOTTOM CORD OF ROOF TRUSS
09.220	GYPSUM BOARD SOFFIT
09.222	FIBER CEMENT LAP SIDING SYSTEM O/ RIGID INSULATION
09.301	FLOOR TILE-SEE FINISH SCHEDULE
09.304	TILE WAINSCOT-SEE FINISH SCHEDULE
09.502	SUSPENDED ACOUSTICAL CEILING SYSTEM
09.504	SUSPENDED WOOD CEILING
09.600	BASE-SEE FINISH SCHEDULE
10.234	36" GRAB BAR - SEE DETAIL --/--
12.201	SINGLE ROLL WINDOW SHADE, MANUAL. SEE DETAIL 18/A961
12.205	DOUBLE ROLL WINDOW SHADE, MOTORIZED. SEE DETAIL 20/A961
22.142	RAINWATER LEADER - SEE PLUMBING PLANS
26.504	PENDANT LIGHT FIXTURE

IDENTIFICATION STAMP
DIV. OF THE STATE ARCHITECT
APP: 02-118630 INC:
REVIEWED FOR
SS ☐ FLS ☐ ACS ☑
DATE: 04/13/2021

OFFICE OF THE STATE FIRE MARSHAL
APPROVED FIRE AND PANIC ONLY
Approval of this plan does not authorize or approve any omission or deviation from applicable regulations. Final approval is subject to field inspection. One set of approved plans shall be available on the project site at all times.
PERMIT NO. 20 N 2332-CP
REVIEWED BY: LEO CATAYLO, OSFM
DATE: 4 / /2021

DGS GENERAL SERVICES
Department of General Services
State of California
Real Estate Services Division
Project Management & Development Branch
707 Third Street, Suite 4-105
West Sacramento, California 95605

NICHOLS MELBURG & ROSSETTO
ARCHITECTS + ENGINEERS
300 Knollcrest Drive
Redding, CA. 96002
(530) 222-3300 (530) 222-3538 FAX
http://www.nmrdesign.com

Copyright © 2020
All ideas, designs, arrangements and plans indicated or represented by this drawing are owned by, and the property of, NICHOLS, MELBURG and ROSSETTO and were created, evolved and developed for use on, and in conjunction with, the specified project. None of such ideas, designs, arrangements or plans shall be used by, or disclosed to any person, firm or corporation for any purpose whatsoever without the written permission of NICHOLS, MELBURG and ROSSETTO.

LICENSE STAMPS

LICENSED ARCHITECT KYLE MAY 27504 REN. 10/31/21 STATE OF CALIFORNIA

CONSULTANT

DRAWING STATUS
CONSTRUCTION DOCUMENTS

ISSUE

No.	Date	Description
1	10/20/2020	INITIAL PLAN REVIEW
2	01/22/2021	AGENCY RESUBMITTAL
3	03/22/2021	AGENCY RESUBMITTAL

If drawing is not 30" x 42" it is a reduced print

PROJECT
RESIDENTIAL CENTER, UKIAH: REPLACEMENT OF EXISTING RESIDENTIAL CENTER
440 EAST HILL ROAD
WILLITS, CALIFORNIA 95490
MENDOCINO COUNTY
CALIFORNIA CONSERVATION CORPS

Supervisor	Designed	Drawn
KJM	DMH	Author

DSA Application No.
02-118630

SHEET TITLE
ADMINISTRATION BUILDING SECTIONS

DGS Project Number	NMR Project Number
000000000001826	18-6456

Reference North: NORTH
Sheet Scale: 3/8" = 1'-0"
Sheet Number: A401A

ISSUE DATE
July 9, 2021

Plot Date: 3/18/2021 3:57:41 PM
File Name: BIM 360://2CC Willits Residential Center/A_CCC-WRC-ADMIN.rvt

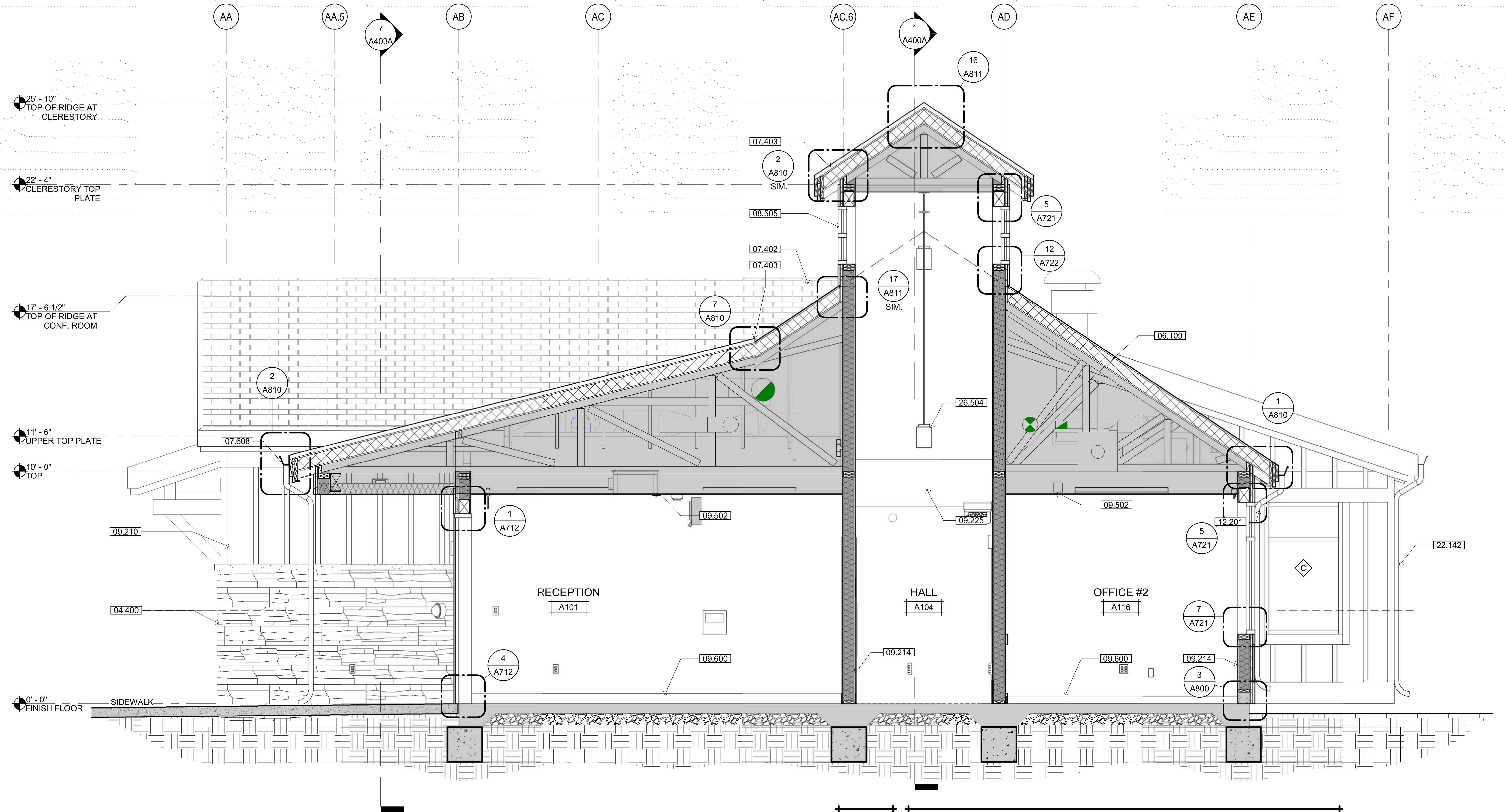

5 BUILDING SECTION

SCALE: 3/8" = 1'-0"

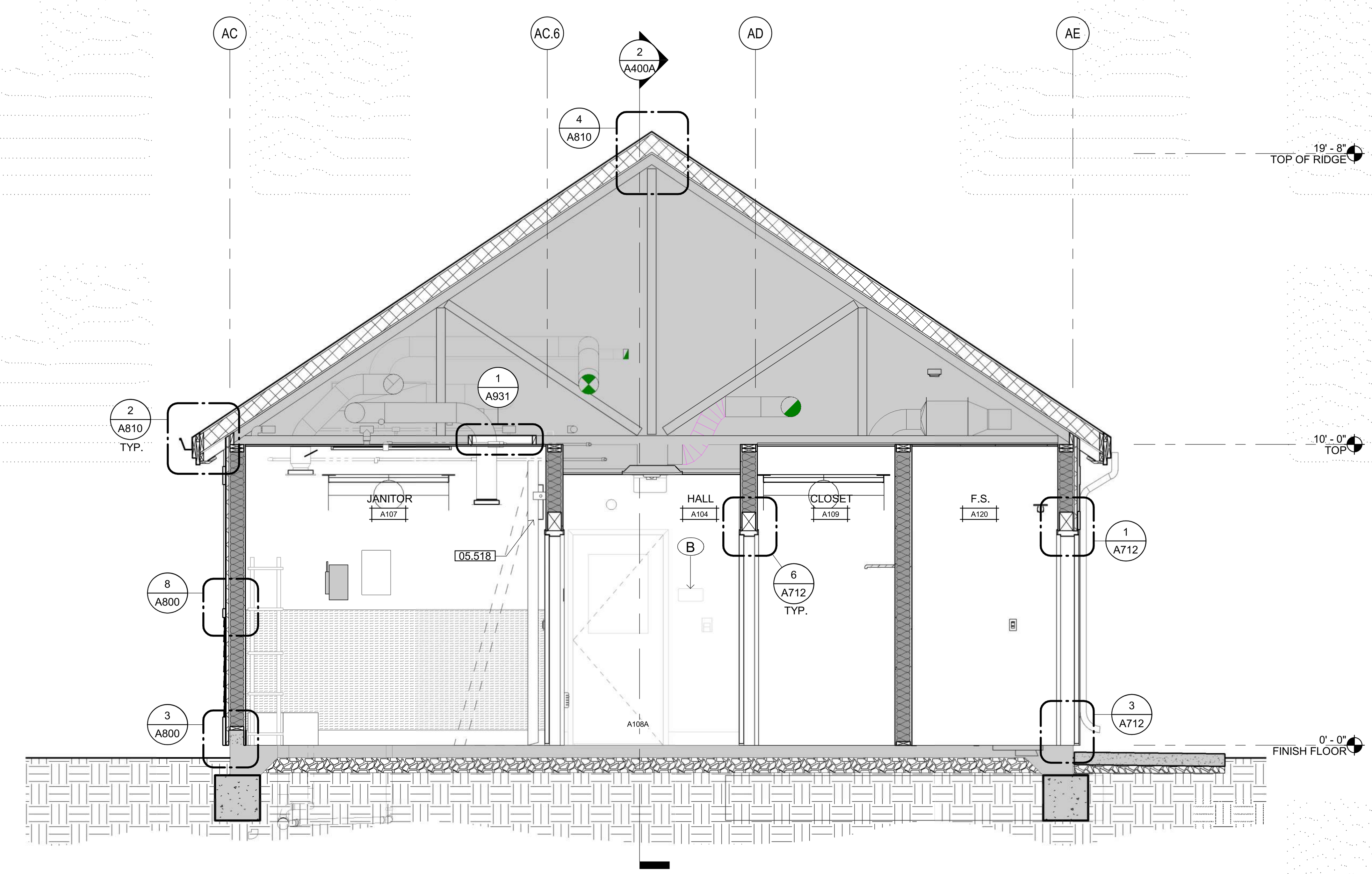

6 BUILDING SECTION

SCALE: 3/8" = 1'-0"

KEYNOTES

04.400	ADHERED STONE VENEER WAINSCOT
05.518	PIVOTAL SHIPS LADDER - SEE DETAIL 3/A931
06.109	WOOD FRAMED TRUSS
07.402	COMPOSITION SHINGLE ROOFING
07.403	STANDING SEAM METAL ROOF SYSTEM, FACTORY PRE-FINISHED
07.608	SEAMLESS RAINWATER GUTTER SYSTEM, PAINTED
08.505	DUAL-GLAZED VINYL WINDOWS
09.210	FIBER CEMENT BATTENS O/ FIBER CEMENT SIDING PANELS O/ RIGID INSULATION
09.214	GYPSUM BOARD, TYP.
09.225	GYPSUM BOARD WRAPPED SHELF
09.502	SUSPENDED ACOUSTICAL CEILING SYSTEM
09.600	BASE-SEE FINISH SCHEDULE
12.201	SINGLE ROLL WINDOW SHADE, MANUAL. SEE DETAIL 18/A961
22.142	RAINWATER LEADER - SEE PLUMBING PLANS
26.504	PENDANT LIGHT FIXTURE

IDENTIFICATION STAMP
DIV. OF THE STATE ARCHITECT
APP: 02-118630 INC:
REVIEWED FOR
SS ☐ FLS ☐ ACS ☑
DATE: 04/13/2021

OFFICE OF THE STATE FIRE MARSHAL
APPROVED FIRE AND PANIC ONLY
Approval of this plan does not authorize or approve any omission or deviation from applicable regulations. Final approval is subject to field inspection. One set of approved plans shall be available on the project site at all times.
PERMIT NO.: 20-N-2332-CP
REVIEWED BY: LITO CATAYLO, OSFM
DATE: 4/ 1 /2021

GENERAL SERVICES
Department of General Services
State of California
Real Estate Services Division
Project Management & Development Branch
707 Third Street, Suite 4-105
West Sacramento, California 95605

NICHOLS MELBURG & ROSSETTO
ARCHITECTS + ENGINEERS
300 Knollcrest Drive
Redding, CA. 96002
(530) 222-3300 (530) 222-3538 FAX
http://www.nmrdesign.com

Copyright © 2020
All ideas, designs, arrangements and plans indicated or represented by this drawing are owned by, and the property of, NICHOLS, MELBURG and ROSSETTO and were created, evolved and developed for use on, and in conjunction with, the specified project. None of such ideas, designs, arrangements or plans shall be used by, or disclosed to any person, firm or corporation for any purpose whatsoever without the written permission of NICHOLS, MELBURG and ROSSETTO.

LICENSE STAMPS

LICENSED ARCHITECT
KYLE MATTI
C 27504
REN. 10/31/21
STATE OF CALIFORNIA

CONSULTANT

DRAWING STATUS
CONSTRUCTION DOCUMENTS

ISSUE

No.	Date	Description
1	10/20/2020	INITIAL PLAN REVIEW
2	01/22/2021	AGENCY RESUBMITTAL
3	03/22/2021	AGENCY RESUBMITTAL

If drawing is not 30" x 42" it is a reduced print

PROJECT
RESIDENTIAL CENTER, UKIAH: REPLACEMENT OF EXISTING RESIDENTIAL CENTER
440 EAST HILL ROAD
WILLITS, CALIFORNIA 95490
MENDOCINO COUNTY
CALIFORNIA CONSERVATION CORPS

Supervisor	Designed	Drawn
KJM	DMH	Author

DSA Application No.
02-118630

SHEET TITLE
ADMINISTRATION BUILDING SECTIONS

DGS Project Number: 000000000001826
NMR Project Number: 18-6456

Reference North: NORTH
Sheet Scale: 3/8" = 1'-0"
Sheet Number: A402A

ISSUE DATE
July 9, 2021

Plot Date: 3/18/2021 3:56:16 PM
File Name: BIM 360://CCC Willits Residential Center/A_CCC-WRC-ADMIN.rvt

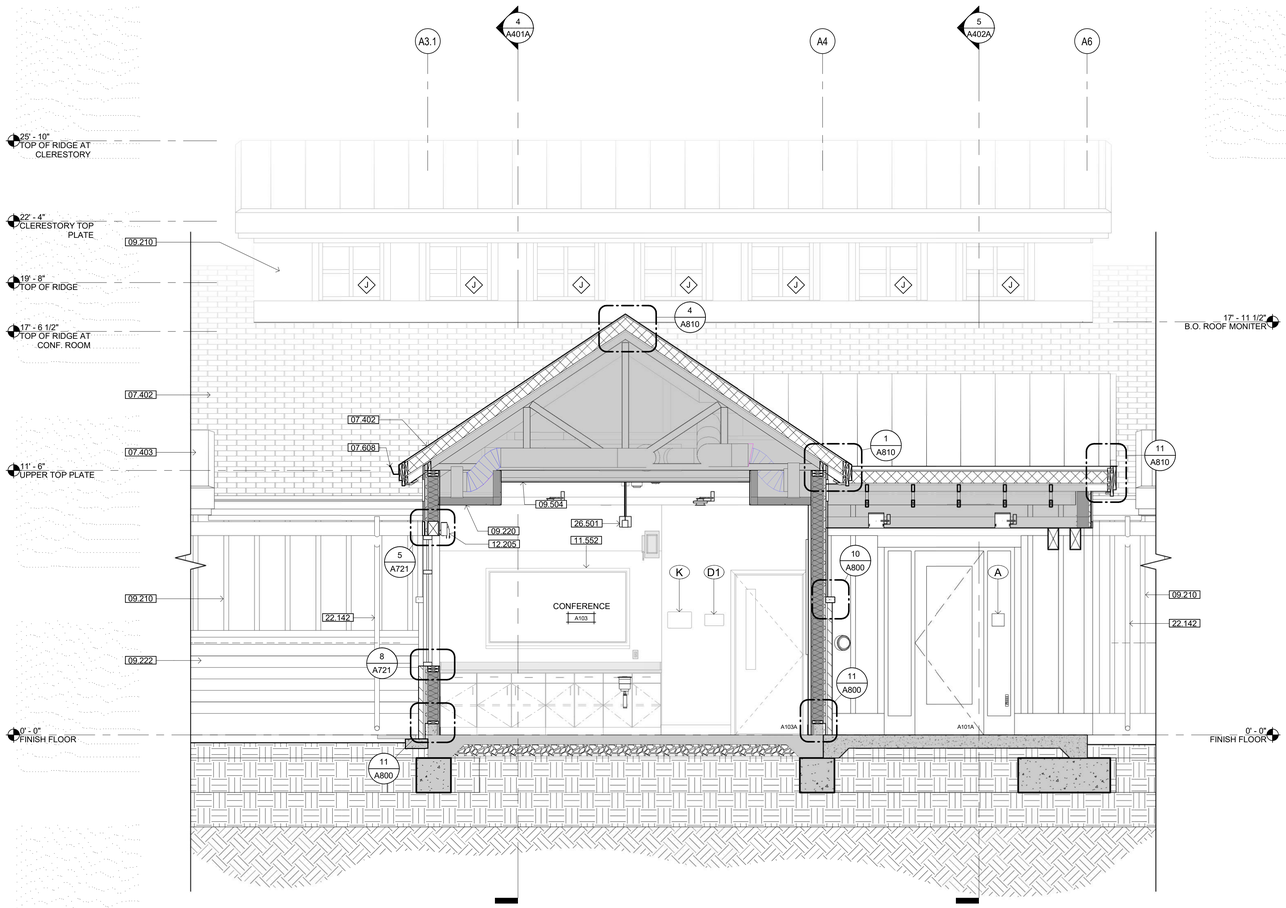

7 BUILDING SECTION

SCALE: 3/8" = 1'-0"

KEYNOTES

07.402	COMPOSITION SHINGLE ROOFING
07.403	STANDING SEAM METAL ROOF SYSTEM, FACTORY PRE-FINISHED
07.608	SEAMLESS RAINWATER GUTTER SYSTEM, PAINTED
09.210	FIBER CEMENT BATTENS O/ FIBER CEMENT SIDING PANELS O/ RIGID INSULATION
09.220	GYPSUM BOARD SOFFIT
09.222	FIBER CEMENT LAP SIDING SYSTEM O/ RIGID INSULATION
09.504	SUSPENDED WOOD CEILING
11.552	WALL MOUNTED TELEVISION, C.F.C.I - SEE DETAIL 17/A960
12.205	DOUBLE ROLL WINDOW SHADE, MOTORIZED. SEE DETAIL 20/A961
22.142	RAINWATER LEADER - SEE PLUMBING PLANS
26.501	LIGHT FIXTURE-SEE ELECTRICAL DRAWINGS

IDENTIFICATION STAMP
DIV. OF THE STATE ARCHITECT
APP: 02-118630 INC:
REVIEWED FOR
SS ☐ FLS ☐ ACS ☑
DATE: 04/13/2021

OFFICE OF THE STATE FIRE MARSHAL
APPROVED FIRE AND PANIC ONLY
Approval of this plan does not authorize or approve any omission or deviation from applicable regulations. Final approval is subject to field inspection. One set of approved plans shall be available on the project site at all times.
PERMIT NO. 20-N-2332-CP
REVIEWED BY: LEO CATAYLO, OSFM
DATE: 4 / /2021

GENERAL SERVICES
Department of General Services
State of California
Real Estate Services Division
Project Management & Development Branch
707 Third Street, Suite 4-105
West Sacramento, California 95605

NICHOLS MELBURG & ROSSETTO
ARCHITECTS + ENGINEERS
300 Knollcrest Drive
Redding, CA. 96002
(530) 222-3300 (530) 222-3538 FAX
http://www.nmrdesign.com

Copyright © 2020
All ideas, designs, arrangements and plans indicated or represented by this drawing are owned by, and the property of, NICHOLS, MELBURG and ROSSETTO and were created, evolved and developed for use on, and in conjunction with, the specified project. None of such ideas, designs, arrangements or plans shall be used by, or disclosed to any person, firm or corporation for any purpose whatsoever without the written permission of NICHOLS, MELBURG and ROSSETTO

LICENSE STAMPS

LICENSED ARCHITECT KYLE MATTHEW MELBURG C-27504 RENEWAL 10/31/21 STATE OF CALIFORNIA

CONSULTANT

DRAWING STATUS
CONSTRUCTION DOCUMENTS

ISSUE

No.	Date	Description
1	10/20/2020	INITIAL PLAN REVIEW
2	01/22/2021	AGENCY RESUBMITTAL
3	03/22/2021	AGENCY RESUBMITTAL

If drawing is not 30" x 42" it is a reduced print

PROJECT
RESIDENTIAL CENTER, UKIAH: REPLACEMENT OF EXISTING RESIDENTIAL CENTER
440 EAST HILL ROAD
WILLITS, CALIFORNIA 95490
MENDOCINO COUNTY
CALIFORNIA CONSERVATION CORPS

Supervisor	Designed	Drawn
KJM	DMH	Author

DSA Application No.
02-118630

SHEET TITLE
ADMINISTRATION BUILDING SECTIONS

DGS Project Number	NMR Project Number
00000000001826	18-6456

Reference North
Sheet Scale 3/8" = 1'-0"
Sheet Number A403A

ISSUE DATE
July 9, 2021

Plot Date: 2/16/2021 1:58:47 PM
File Name: BIM 360://C22-2 Willits Residential Center/A_CCC-WRC-ADMIN.rvt

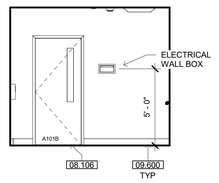

1 A101 RECEPTION - NORTH
1/4" = 1'-0"

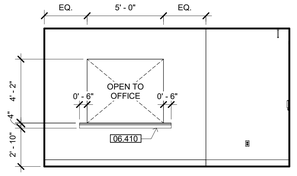

2 A101 RECEPTION - EAST
1/4" = 1'-0"

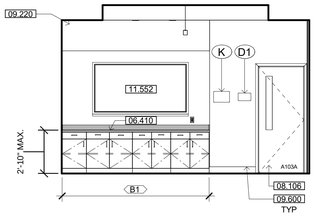

3 A103 CONFERENCE - NORTH
1/4" = 1'-0"

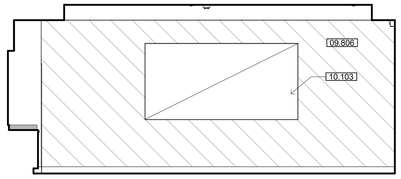

4 A103 CONFERENCE - EAST
1/4" = 1'-0"

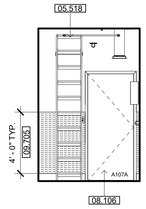

5 A107 JANITOR - NORTH
1/4" = 1'-0"

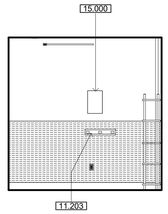

6 A107 JANITOR - EAST
1/4" = 1'-0"

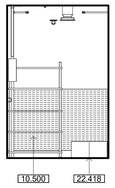

7 A107 JANITOR - SOUTH
1/4" = 1'-0"

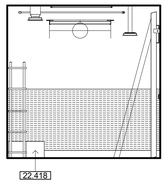

8 A107 JANITOR - WEST
1/4" = 1'-0"

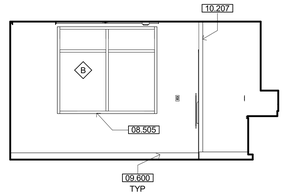

9 A108 BREAK ROOM - NORTH
1/4" = 1'-0"

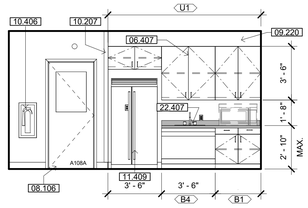

10 A108 BREAK ROOM - EAST
1/4" = 1'-0"

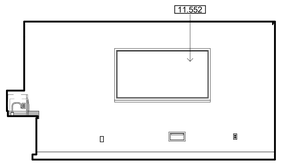

11 A108 BREAK ROOM - SOUTH
1/4" = 1'-0"

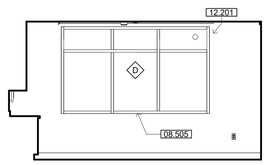

12 A108 BREAK ROOM - WEST
1/4" = 1'-0"

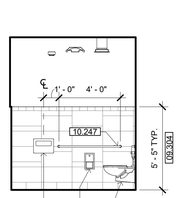

13 A111 RESTROOM - NORTH
1/4" = 1'-0"

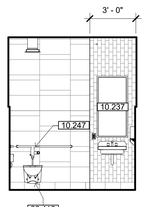

14 A111 RESTROOM - EAST
1/4" = 1'-0"

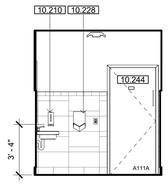

15 A111 RESTROOM - SOUTH
1/4" = 1'-0"

16 A111 RESTROOM - WEST
1/4" = 1'-0"

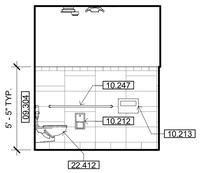

17 A112 RESTROOM - NORTH
1/4" = 1'-0"

18 A112 RESTROOM - EAST
1/4" = 1'-0"

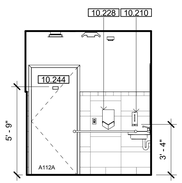

19 A112 RESTROOM - SOUTH
1/4" = 1'-0"

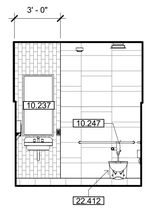

20 A112 RESTROOM - WEST
1/4" = 1'-0"

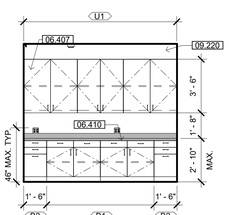

21 A117 COPY ROOM - EAST
1/4" = 1'-0"

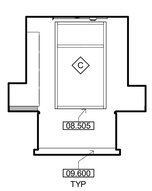

22 A117 COPY ROOM - NORTH
1/4" = 1'-0"

23 A117 COPY ROOM - SOUTH
1/4" = 1'-0"

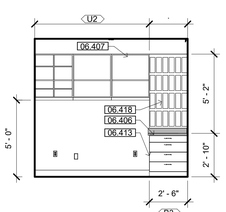

24 A117 COPY ROOM - WEST
1/4" = 1'-0"

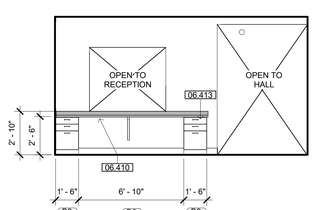

25 A119 OPEN OFFICE - WEST
1/4" = 1'-0"

KEYNOTES

05.518	PIVOTAL SHIPS LADDER - SEE DETAIL 3/A931
06.406	COUNTER AND BASE CABINET
06.407	UPPER CABINET
06.410	SOLID SURFACE COUNTERTOP
06.413	CABINET LOCK AS SHOWN
06.418	MAIL SLOTS
08.106	PLASTIC LAMINATE DOOR IN HOLLOW METAL FRAME
08.505	DUAL-GLAZED VINYL WINDOWS
09.220	GYPSUM BOARD SOFFIT
09.304	TILE WAINSCOT-SEE FINISH SCHEDULE
09.600	BASE-SEE FINISH SCHEDULE
09.705	FRP PANEL-SEE FINISH SCHEDULE
09.806	ACOUSTICAL WALL TILE
10.103	MARKERBOARD - C.F.C.I.
10.207	CORNER GUARD - SEE FINISH SCHEDULE
10.210	SOAP DISPENSER
10.212	SEMI-RECESSED TOILET TISSUE DISPENSER
10.213	SURFACE MOUNTED TOILET SEAT COVER DISPENSER
10.228	HAND DRYER
10.237	24"W X 48"H MIRROR
10.244	GARMENT HOOK
10.247	GRAB BARS, 48" AT SIDE & 42" AT BACK - SEE DETAIL 4/A960
10.406	SEMI-RECESSED FIRE EXTINGUISHER CABINET PER DETAIL 2B/A960
10.500	METAL STORAGE SHELVING UNIT
11.203	COMBINATION UTILITY SHELF WITH MOP AND BROOM HOLDER
11.409	REFRIGERATOR/FREEZER - SEE FOOD SERVICE DRAWINGS
11.552	WALL MOUNTED TELEVISION, C.F.C.I - SEE DETAIL 17/A960
12.201	SINGLE ROLL WINDOW SHADE, MANUAL. SEE DETAIL 18/A961
15.000	ELECTRIC WATER HEATER. SEE PLUMBING DRAWINGS
22.407	ACCESSIBLE SINK - SEE PLUMBING DRAWINGS
22.412	ACCESSIBLE WALL HUNG TOILET
22.418	JANITOR SINK-SEE PLUMBING DRAWINGS

INTERIOR ELEV. LEGEND

##X	CASEWORK TAG - SEE SHEET A940
X	SIGNAGE TAG - SEE SHEET A965
B##X	DOOR TAG - SEE SCHEDULE, SHEET A710
X	WINDOW TAG - SEE SCHEDULE, SHEET A720
	GYPSUM BOARD - PAINT
	WALL TILE WT-1/2 OVER CEMENTITIOUS BACKER BOARD
	WALL TILE WT-3 OVER CEMENTITIOUS BACKER BOARD
	FIBER REINFORCED PLASTIC (FRP) WALL PROTECTION OVER GYPSUM BOARD
	ACOUSTIC WALL PANEL AWP-2 OVER GYPSUM BOARD

INTERIOR ELEV. GEN. NOTES

A. GENERAL CONTRACTOR TO PROVIDE STRUCTURAL SUPPORT, BACKING AND/OR METAL REINFORCEMENT IN STUD WALLS AT ALL CASEWORK, CABINETS, SHELVING, EQUIPMENT ETC. REFER TO G212 & G213 FOR TYPICAL MOUNTING HEIGHTS AND ARRANGEMENTS OF COMMON SPECIALTY ITEMS INCLUDING SHOWERS AND TOILET ROOMS.

B. SEE SHEET 18/A960 FOR TYP. ACCESSORY MOUNTING

C. SEE MECHANICAL, ELECTRICAL & LOW VOLTAGE DRAWINGS FOR EXTENT AND LOCATION OF ADDITIONAL WALL MOUNTED ITEMS SUCH AS CARD READERS, THERMOSTATS, SWITCHES, OUTLETS, CLOCKS, NURSECALL LIGHTS, FIRE ALARM, ETC. LOCATE ALL OUTLETS, SWITCHES, EQUIP., RECEPTACLE BOXES & OTHER SIMILAR RELATED ITEMS FOR OWNER'S FINAL APPROVAL PRIOR TO CONDUIT/PIPE INSTALLATION.

D. CONTRACTOR TO COORDINATE LOCATION OF CONTRACTOR OR OWNER FURNISHED ITEMS.

E. REFER TO FINISH SCHEDULE AND SPECIFICATIONS FOR SPECIFIC FINISH MATERIAL.

F. ALL VERTICAL DIMENSIONS ARE FROM FINISHED FLOOR, U.N.O.

G. ALL RECESSED SPECIALTIES SHOWN ON ELEVATIONS THAT ARE LOCATED IN FIRE RATED WALLS ARE TO BE 5-SIDED WITH 5/8" TYPE 'X' GYPBOARD SIMILAR TO 3/A961

H. WHERE OUTLETS, MONITORS AND LIGHT SWITCHES ARE NOT DIMENSIONED AT A GIVEN ELEVATION, CAN BE ASSUMED TO BE SIMILAR TO THE ONE ON THE ELEVATION THAT IS DIMENSIONED. WHERE OUTLETS ARE DIMENSIONED ON AN ELEVATION THE TYPICAL FRAMING MUST BE ALTERED AND/OR STUDS HEADED OFF TO ACCOMMODATE DIMENSIONED LOCATIONS AND SHOWN.

I. ALL WALL SURFACES IN NEED OF REPAIR SHALL BE FILLED, SPACKLED AND TEXTURED TO MATCH THE EXISTING WALLS. FINISH AS SPECIFIED.

BUILT-IN CASEWORK NOTES

AA. PROVIDE BACKSPLASH AND ENDSPLASH OF MATERIAL MATCHING COUNTERTOP ON ALL COUNTERTOPS U.O.N. BACKSPLASH TO RETURN AT CABINET ENDS - SEE DETAIL OR NOTES FOR HEIGHTS.

BB. PROVIDE PLAM END PANEL WHERE COUNTERTOP ENDS WITHOUT BASE UNIT OR SUPPORTING WALL.

CC. PROVIDE "FLOATING WALL-MOUNT BRACKET" @ 32" O.C. AT ANY OPEN COUNTER WITH SPAN GREATER THAN 3'-0" WIDTH. SEE 10/A940. CONTRACTOR TO VERFIY COORDINATION OF TRADES FOR IN-WALL INSTALLATION

DD. PROVIDE (1) ADJUSTABLE SHELF AT BASE CABINETS EXCEPT SINK BASE, U.O.N.

EE. FIELD VERIFY ALL DIMENSIONS AND EQUIPMENT SIZES PRIOR TO CASEWORK FABRICATION.

FF. PROVIDE 3" DIAMETER GROMMETS AT BACK OF COUNTERTOP AS DIRECTED BY OWNER.

GG. ALL SHELVES ARE ADJUSTABLE, U.O.N.

IDENTIFICATION STAMP
DIV. OF THE STATE ARCHITECT
APP: 02-118630 INC:
REVIEWED FOR
SS ☐ FLS ☐ ACS ☑
DATE: 04/13/2021

OFFICE OF THE STATE FIRE MARSHAL
APPROVED FIRE AND PANIC ONLY
Approval of this plan does not authorize or approve any omission or deviation from applicable regulations. Final approval is subject to field inspection. One set of approved plans shall be available on the project site at all times.
PERMIT NO. 20-N-2332-CP
REVIEWED BY: LEO CATAYLO, OSFM
DATE: 4 / /2021

DGS GENERAL SERVICES
Department of General Services
State of California
Real Estate Services Division
Project Management & Development Branch
707 Third Street, Suite 4-105
West Sacramento, California 95605

NICHOLS MELBURG & ROSSETTO
ARCHITECTS + ENGINEERS
300 Knollcrest Drive
Redding, CA. 96002
(530) 222-3300 (530) 222-3538 FAX
http://www.nmrdesign.com

Copyright © 2020
All ideas, designs, arrangements and plans indicated or represented by this drawing are owned by, and the property of, NICHOLS, MELBURG and ROSSETTO and were created, evolved and developed for use on, and in conjunction with, the specified project. None of such ideas, designs, arrangements or plans shall be used by, or disclosed to any person, firm or corporation for any purpose whatsoever without the written permission of NICHOLS, MELBURG and ROSSETTO.

LICENSE STAMPS

LICENSED ARCHITECT KYLE MATTHEW ROSSETTO C-31504 RENEWAL 10/31/21 STATE OF CALIFORNIA

CONSULTANT

DRAWING STATUS
CONSTRUCTION DOCUMENTS

ISSUE

No.	Date	Description
1	10/20/2020	INITIAL PLAN REVIEW
2	01/22/2021	AGENCY RESUBMITTAL
3	03/22/2021	AGENCY RESUBMITTAL

If drawing is not 30" x 42" it is a reduced print

PROJECT
RESIDENTIAL CENTER, UKIAH: REPLACEMENT OF EXISTING RESIDENTIAL CENTER
440 EAST HILL ROAD
WILLITS, CALIFORNIA 95490
MENDOCINO COUNTY
CALIFORNIA CONSERVATION CORPS

Supervisor	Designed	Drawn
KJM	DMH	Author

DSA Application No.
02-118630

SHEET TITLE
ADMINISTRATION INTERIOR ELEVATIONS

DGS Project Number: 000000000001826
NMR Project Number: 18-6456

Reference North: NORTH
Sheet Scale: As indicated
Sheet Number: A500A

ISSUE DATE
July 9, 2021

Plot Date: 3/16/2021 4:09:40 PM
File Name: BIM 360://CCC-Willits Residential Center/A_CCC-WRC-ADMIN.rvt

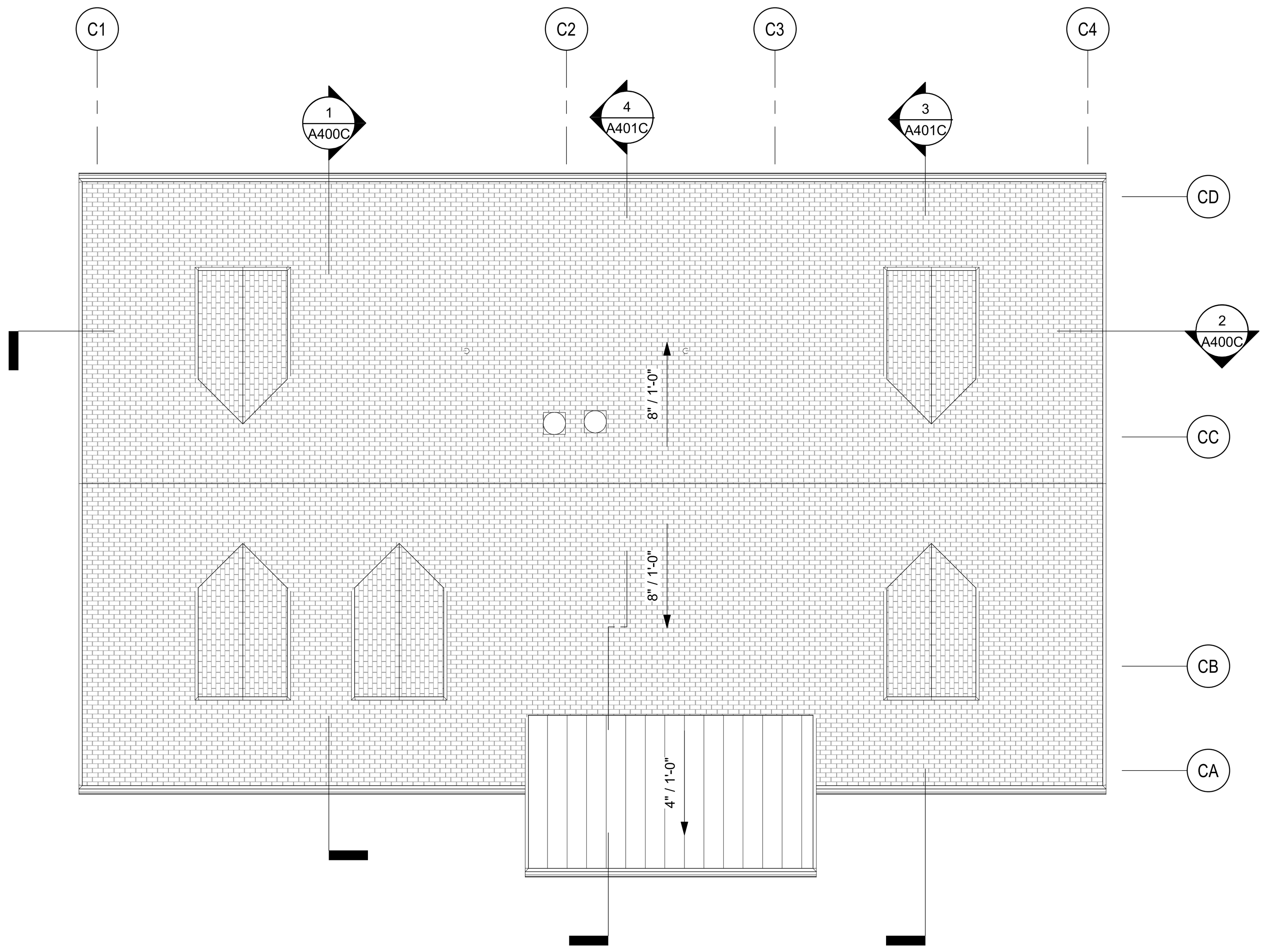

NORTH

COMET BUILDING ROOF PLAN

SCALE: 1/8" = 1'-0"

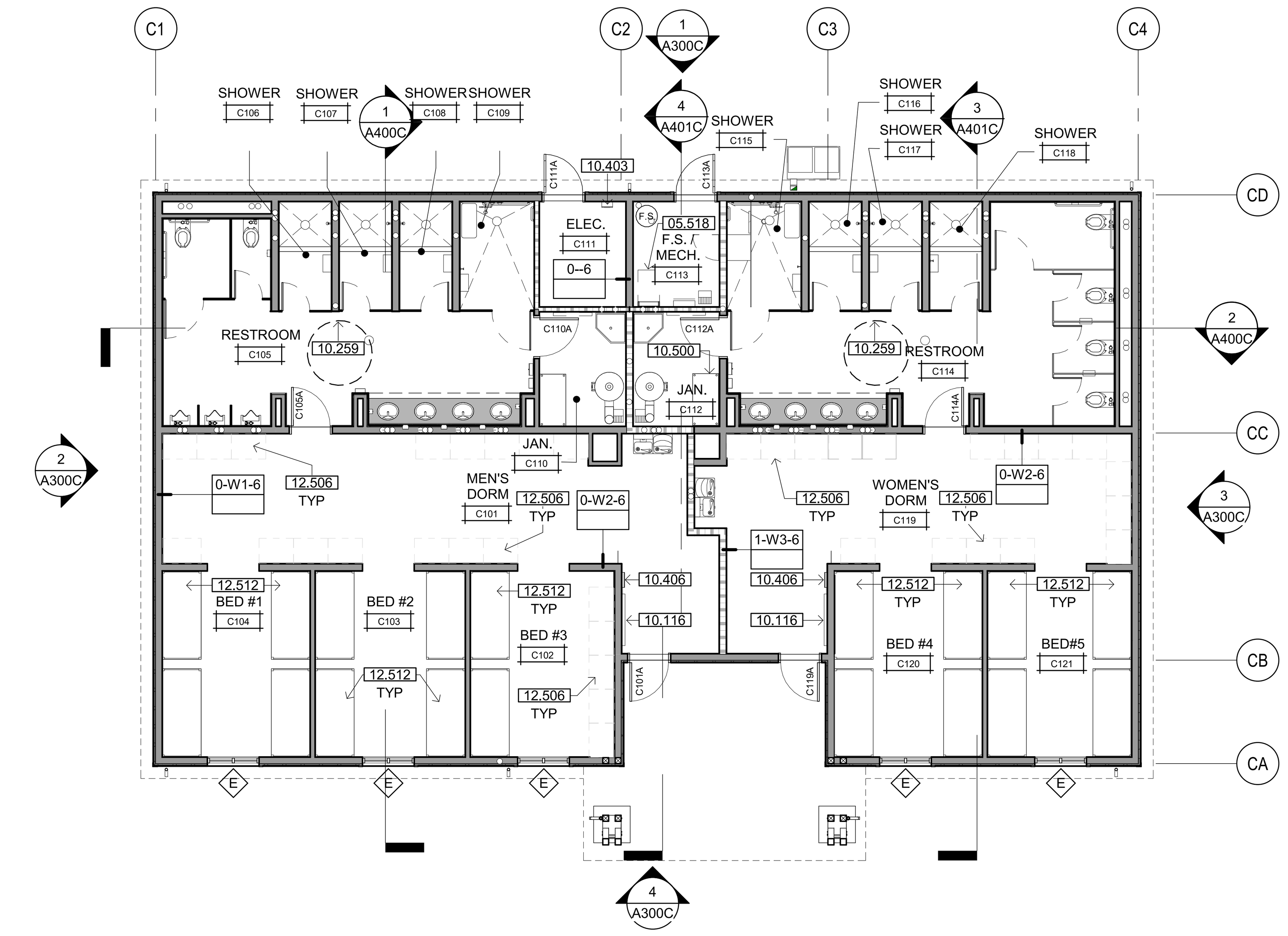

NORTH

COMET BUILDING FLOOR PLAN

SCALE: 1/8" = 1'-0"

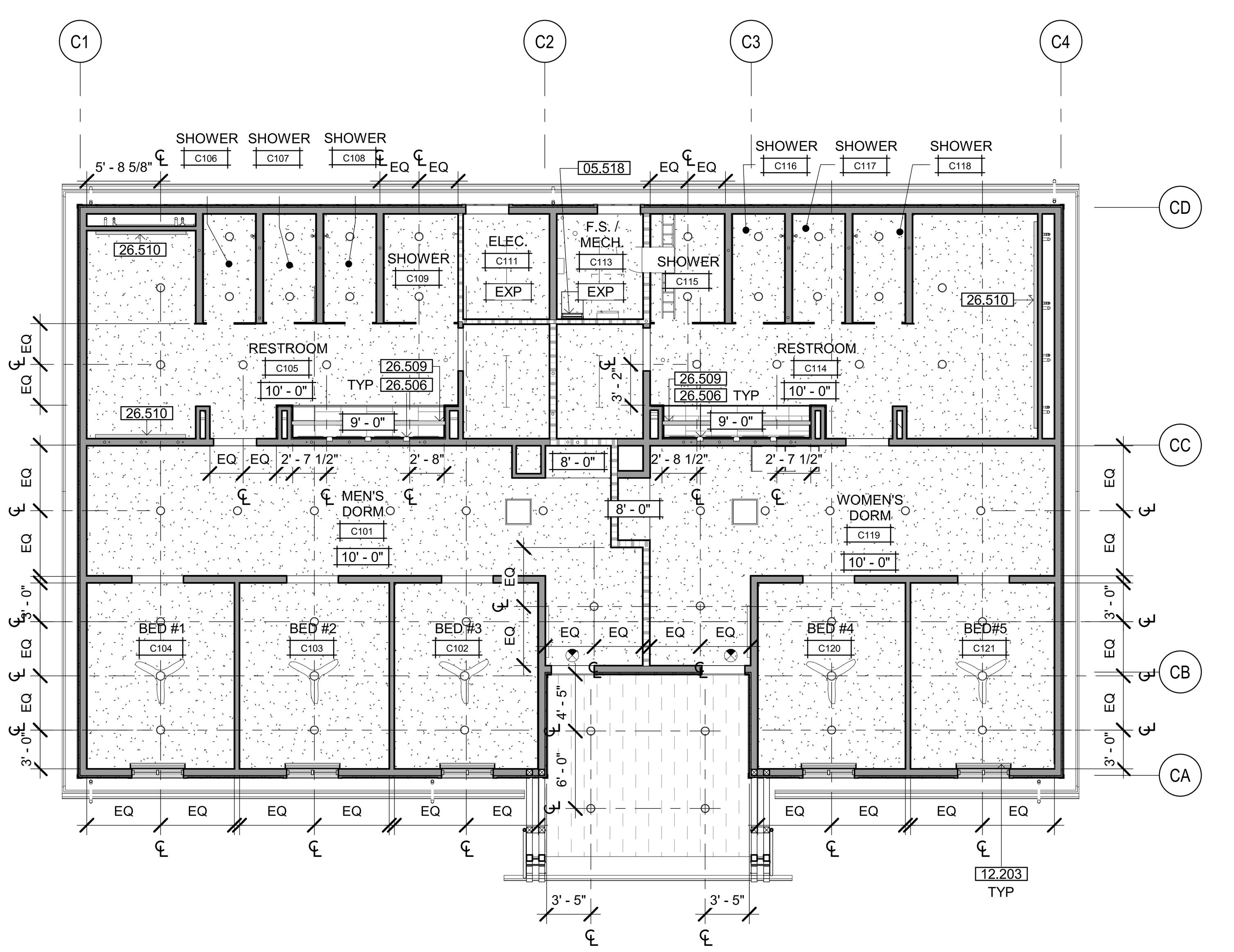

NORTH

COMET BUILDING REFLECTED CEILING PLAN

SCALE: 1/8" = 1'-0"

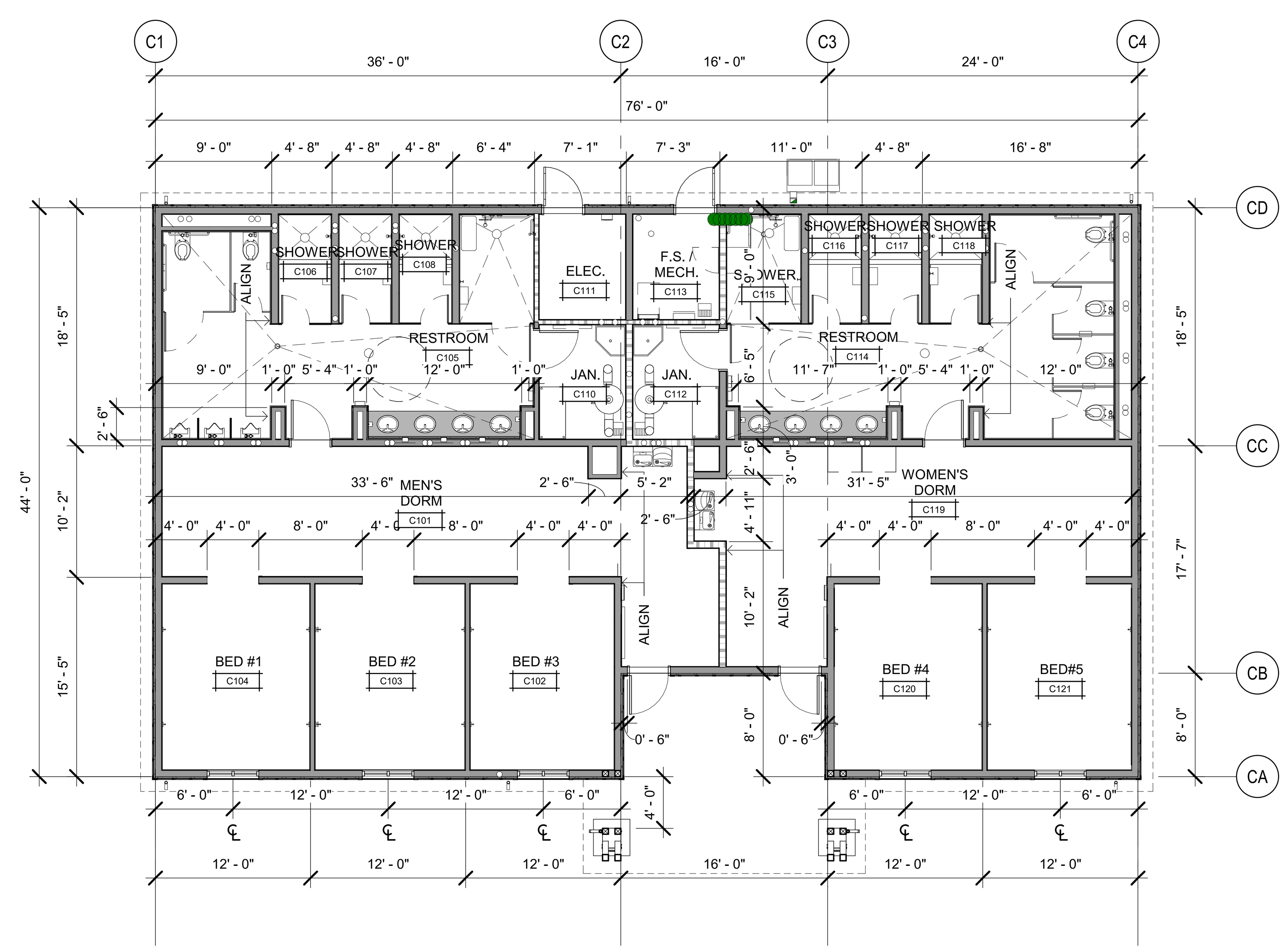

NORTH

COMET BUILDING DIMENSION PLAN

SCALE: 1/8" = 1'-0"

ROOF PLAN NOTES

A. ALL PIPE PENETRATIONS NOT SHOWN. SEE MECHANICAL & PLUMBING DRAWINGS FOR LOCATION INFORMATION, SEE ROOF PIPE PENETRATION DETAIL 5/A810.

B. HVAC CONDENSATE DRAIN PIPES NOT SHOWN. SEE MECHANICAL & PLUMBING DRAWINGS FOR REQUIREMENTS.

ROOF PLAN LEGEND

REFER TO DRAWING G120 FOR TYPICAL ROOF CONSTRUCTION ASSEMBLIES

- ASPHALT SHINGLE ROOFING - SEE SHEET A810
- PREFINISHED METAL ROOFING - SEE SHEET A810
- ROOF DRAIN & OVERFLOW

GENERAL RCP NOTES

A. MAINTAIN CEILING HEIGHTS AND LIGHTING LAYOUT PATTERNS SHOWN, UNLESS OTHERWISE APPROVED BY ARCHITECT. CONFLICTS CAUSED BY DUCTWORK, SPRINKLER PIPING, CONDUIT, AND/OR OTHER ITEMS OR FEATURES OF CONSTRUCTION SHALL NOT CONSTITUTE CAUSE FOR VARIANCE FROM CEILING HEIGHTS AND/OR LIGHTING LAYOUTS INDICATED IN THESE DRAWINGS. COORDINATE ALL WORK TO ACHIEVE HEIGHTS AND LAYOUTS AS INDICATED IN THESE DRAWINGS.

B. REFER TO MECHANICAL, FIRE PROTECTION, ELECTRICAL, SECURITY, AND AUDIOVISUAL DRAWINGS FOR ADDITIONAL CONSTRUCTION FEATURES, SYSTEMS, FIXTURES, AND EQPT. LOCATED IN, ON, AND ABOVE CEILINGS. TO THE EXTENT THAT THESE ITEMS ARE SHOWN ON REFLECTED CEILING PLANS, THEY ARE FOR GENERAL INFORMATION AND LAYOUT PURPOSES ONLY, AND DO NOT NECESSARILY REPRESENT ACTUAL SCOPE OR QUANTITIES REQUIRED FOR THE PROJECT. ALL QUANTITIES TO BE VERIFIED.

C. AT ACOUSTICAL TILE CEILINGS, ALL FIXTURES AND EQUIPMENT SHALL BE CENTERED WITHIN ACOUSTICAL CEILING TILES, IN BOTH DIRECTIONS.

D. SPRINKLER HEAD LOCATIONS SHALL RESULT IN A UNIFORM AND REPETITIVE PATTERN FOR EACH AREA, AND SHALL BE LOCATED SYMMETRICALLY WITH RESPECT TO WALLS, CEILING GRID PATTERNS, AND LIGHT FIXTURES. SPRINKLER HEADS IN ACOUSTICAL TILE CEILINGS SHALL BE LOCATED IN THE CENTERS OF THE CEILING TILES.

E. TYP. EXTERIOR SOFFIT HEIGHT IS AT UNDERSIDE OF STRUCTURAL FRAMING U.O.N.

RCP LEGEND

REFER TO DRAWING G120 FOR TYPICAL CEILING CONSTRUCTION ASSEMBLIES

- 2' x 2' SUSPENDED ACOUSTICAL TILE CEILING SYSTEM — C 3
- 5/8" GYPSUM BOARD CEILING — C 2
- EXTERIOR FIBER CEMENT SOFFIT, NON-VENTED
- TILE - SEE FINISH SCHEDULE
- +X'-X" — INDICATES HEIGHT OF FINISHED CEILING OR SOFFIT (FROM REFERENCE FLOOR ELEVATION)
- 6" DIAMETER RECESSED CAN LIGHT FIXTURE - SEE ELECTRICAL DRAWINGS
- LINEAR LIGHT FIXTURE - SEE ELECTRICAL DRAWINGS
- SUPPLY AIR DIFFUSERS - SEE MECHANICAL DRAWINGS
- RETURN AIR DIFFUSER - SEE MECHANICAL DRAWINGS
- EXHAUST - SEE MECHANICAL DRAWINGS
- DORM ROOM CEILING FAN

KEYNOTE

05.518	PIVOTAL SHIPS LADDER - SEE DETAIL 3/A931
10.116	GLASS DISPLAY MESSAGE BOARD
10.259	60" DIAMETER TURNING RADIUS
10.403	SURFACE-MOUNTED FIRE EXTINGUISHER CABINET PER DETAIL 3A/A960
10.406	SEMI-RECESSED FIRE EXTINGUISHER CABINET PER DETAIL 2B/A960
10.500	METAL STORAGE SHELVING UNIT
12.203	DOUBLE ROLL WINDOW SHADE, MANUAL. SEE DETAIL 19/A961
12.506	LOCKERS - OFOI
12.512	BUNK BED - OFOI
26.506	WALL MOUNTED LIGHT FIXTURE-CENTER BETWEEN MIRROR
26.509	LINEAR LED LIGHT FIXTURE RECESSED INTO CEILING
26.510	WALL MOUNTED UP/DOWN LIGHT FIXTURE

GENERAL NOTES

A. FOR WALL ASSEMBLIES REFER TO GENERAL ASSEMBLIES, SHEET G121.
B. UNLESS OTHERWISE INDICATED, INTERIOR STUD FRAMED WALLS SHALL BE TYPE 0-2-6.
C. UNLESS OTHERWISE INDICATED, EXTERIOR STUD FRAMED WALLS SHALL BE TYPE 0-1-6.
D. SEE ENLARGED PLANS FOR WALL TYPES NOT INDICATED ON THIS PLAN.
E. REFER TO DETAIL 4/A961 FOR WALL INTERSECTION PRIORITIES.
F. SEE DOOR SCHEDULE, SHEET A710, FOR ADDITIONAL DOOR INFORMATION AND DIMENSIONS. ALL DOOR RATINGS SHALL MATCH OR EXCEED THE RATING OF THE WALL OR PARTITION IN WHICH THEY ARE INSTALLED.
G. SEE WINDOW SCHEDULE, SHEET A720, FOR ADDITIONAL WINDOW INFORMATION AND DIMENSIONS. ALL WINDOW RATINGS SHALL MATCH OR EXCEED THE RATING OF THE WALL OR PARTITION IN WHICH THEY ARE INSTALLED.
H. REFER TO STRUCTURAL NOTES SHEET S011 AND STRUCTURAL DETAIL SHEET S561 FOR TYPICAL WALL FRAMING DETAILS AND REQUIREMENTS
I. REFER TO SHEET A961 FOR HEAD OF WALL ASSEMBLIES
J. REFER TO FINISH SCHEDULE & INTERIOR ELEVATIONS FOR GYPSUM BOARD TYPE & LOCATIONS
K. ALL DIMENSIONS SHALL TAKE PRECEDENCE OVER SCALE SHOWN ON PLANS, SECTIONS AND DETAILS. DIMENSIONS MISSING FROM THE PLANS, OR NEEDED FOR EXECUTION OF WORK, SHALL BE PROVIDED OR CLARIFIED BY THE ARCHITECT BEFORE THE WORK IS INSTALLED. ERRORS RESULTING IN FAILURE TO COMPLY WITH THIS PROCEDURE SHALL BE CORRECTED BY, AND AT THE SOLE EXPENSE OF, THE CONTRACTOR. DIMENSIONS ARE TO FACE OF STUDS OR SLAB UNLESS NOTED OTHERWISE ON DRAWINGS. DO NOT SCALE DRAWINGS. DIMENSIONS NOTED AS "CLEAR" (CLR) ARE TAKEN TO THE FACE OF FINISH MATERIALS. THE CONTRACTOR SHALL VERIFY DIMENSIONS OF PREFABRICATED AND MANUFACTURED ITEMS AND COORDINATE ROUGH OPENINGS ACCORDINGLY.

1. ALL DIMENSIONS ARE TO FACE OF STUD, CENTERLINE OF COLUMNS, FACE OF CONCRETE
2. FINISH FLOOR DIMENSIONS ARE TO TOP OF CONCRETE OR OTHER HARD SURFACE
3. CEILING HEIGHT DIMENSIONS ARE TO FINISH SURFACES

FLOOR PLAN LEGEND

- DOOR WITH TAG - SEE SCHEDULE, SHEET A710
- WINDOW WITH TAG - SEE SCHEDULE, SHEETS A720
- COUNTERTOP OVER CASEWORK - DASHED LINE INDICATES WALL MOUNTED CASEWORK ABOVE - SEE INTERIOR ELEVATIONS
- FEC — RECESSED FIRE EXTINGUISHER & CABINET
- SINK / LAVATORY - SEE PLUMBING DRAWINGS
- TOILET - SEE PLUMBING DRAWINGS
- URINAL - SEE PLUMBING DRAWINGS
- DRINKING FOUNTAIN - SEE PLUMBING DRAWINGS

WALL TYPES LEGEND

SEE SHEET G121 FOR ASSEMBLY TYPES

EXTERIOR

2 x 6 WOOD STUD WALL - NON RATED	0-W1-6 * • #
2 x 12 WOOD STUD WALL - NON RATED	0-W1-12 * • #

INTERIOR

2 x 4 WOOD STUD WALL - NON RATED	0-W2-4 * • #
2 x 6 WOOD STUD WALL - NON RATED	0-W2-6 * • #
2 x 8 WOOD STUD WALL - NON RATED	0-W2-8 * • #
2 x 12 WOOD STUD WALL - NON RATED	0-W2-12 * • #
2 x 4 WOOD STUD WALL - ACOUSTIC	0-W5-4 * • #
2 x 6 WOOD STUD WALL - ACOUSTIC	0-W5-6 * • #
2 X 4 WOOD STUD WALL - 1-HR FIRE PARTITION W/ PROTECTED OPENINGS	1-W3-4 * • #
2 X 6 WOOD STUD WALL - 1-HR FIRE PARTITION W/ PROTECTED OPENINGS	1-W3-6 * • #

WALL TYPE NOTES

PARTITION SYMBOL

#-#-# / * · #

- FIRE-RESISTIVE RATING
- ASSEMBLY DETAIL NUMBER
- NOMINAL STUD SIZE
- # = SPECIAL CONDITIONS
- * = PARTITION HEIGHT

IDENTIFICATION STAMP
DIV. OF THE STATE ARCHITECT
APP: 02-118630 INC:
REVIEWED FOR
SS ☐ FLS ☐ ACS ☑
DATE: 04/13/2021

OFFICE OF THE STATE FIRE MARSHAL
APPROVED FIRE AND PANIC ONLY
Approval of this plan does not authorize or approve any omission or deviation from applicable regulations. Final approval is subject to field inspection. One set of approved plans shall be available on the project site at all times.
PERMIT NO.: 20-N-2332-CP
REVIEWED BY: LITO CATAYLO, OSFM
DATE: 4/1/2021

DGS
GENERAL SERVICES
Department of General Services
State of California
Real Estate Services Division
Project Management & Development Branch
707 Third Street, Suite 4-105
West Sacramento, California 95605

NM&R
NICHOLS MELBURG & ROSSETTO
ARCHITECTS + ENGINEERS
300 Knollcrest Drive
Redding, CA. 96002
(530) 222-3300 (530) 222-3538 FAX
http://www.nmrdesign.com

Copyright © 2020
All ideas, designs, arrangements and plans indicated or represented by this drawing are owned by, and the property of, NICHOLS, MELBURG and ROSSETTO and were created, evolved and developed for use on, and in conjunction with, the specified project. None of such ideas, designs, arrangements or plans shall be used by, or disclosed to any person, firm or corporation for any purpose whatsoever without the written permission of NICHOLS, MELBURG and ROSSETTO.

LICENSE STAMPS

LICENSED ARCHITECT
KYLE MATTI
C 27504
REN. 10/31/21
STATE OF CALIFORNIA

CONSULTANT

DRAWING STATUS
CONSTRUCTION DOCUMENTS

ISSUE

No.	Date	Description
1	10/20/2020	INITIAL PLAN REVIEW
2	01/22/2021	AGENCY RESUBMITTAL
3	03/22/2021	AGENCY RESUBMITTAL

If drawing is not 30" x 42" it is a reduced print

PROJECT
RESIDENTIAL CENTER, UKIAH: REPLACEMENT OF EXISTING RESIDENTIAL CENTER
440 EAST HILL ROAD
WILLITS, CALIFORNIA 95490
MENDOCINO COUNTY
CALIFORNIA CONSERVATION CORP

Supervisor	Designed	Drawn
KJM	DMH	CW

DSA Application No.
02-118630

SHEET TITLE
COMET FLOOR PLAN, DIMENSION PLAN, ROOF PLAN, RCP

DGS Project Number	NMR Project Number
000000000001826	18-6456

Reference North: NORTH
Sheet Scale: As indicated
Sheet Number: A201C

ISSUE DATE
July 9, 2021

Plot Date: 3/19/2021 8:11:38 AM
File Name: BIM 360://CCC Willits Residential Center/A_CCC-WRC-COMET.rvt

ENLARGED FLOOR PLAN

SCALE: 1/4" = 1'-0"

KEYNOTES

05.518	PIVOTAL SHIPS LADDER - SEE DETAIL 3/A931
10.116	GLASS DISPLAY MESSAGE BOARD
10.210	SOAP DISPENSER
10.212	SEMI-RECESSED TOILET TISSUE DISPENSER
10.218	PARTITION MOUNTED DUAL-SIDED COMBINATION TOILET TISSUE DISPENSER AND SEAT COVER DISPENSER
10.223	SURFACE MOUNTED PAPER TOWEL DISPENSER
10.228	HAND DRYER
10.232	GRAB BAR - SEE DETAIL 4/A960
10.245	AT ACCESSIBLE SHOWER, PROVIDE: STAINLESS STEEL SHOWER ROD WITH CURTAIN AND S.S. HANGERS, FOLD-DOWN SEAT, 24"/36" CORNER GRAB BARS, RECESSED S.S. SOAP DISH AND 60" LONG FLEXIBLE SHOWER SPRAY HOSE
10.246	GRAB BARS, 42" AT SIDE & 36" AT BACK - SEE DETAIL --/--
10.259	60" DIAMETER TURNING RADIUS
10.500	METAL STORAGE SHELVING UNIT
11.203	COMBINATION UTILITY SHELF WITH MOP AND BROOM HOLDER
22.404	SHOWER - SEE PLUMBING DRAWINGS
22.406	ACCESSIBLE URINAL - SEE PLUMBING DRAWINGS
22.407	ACCESSIBLE SINK - SEE PLUMBING DRAWINGS
22.412	ACCESSIBLE WALL HUNG TOILET
22.418	JANITOR SINK-SEE PLUMBING DRAWINGS
26.506	WALL MOUNTED LIGHT FIXTURE-CENTER BETWEEN MIRROR

GENERAL NOTES

A. FOR FIXTURES AND ACCESSORIES MOUNTING HEIGHTS, SEE SHEET G212.

IDENTIFICATION STAMP
DIV. OF THE STATE ARCHITECT
APP: 02-118630 INC:
REVIEWED FOR
SS ☐ FLS ☐ ACS ☑
DATE: 04/13/2021

OFFICE OF THE STATE FIRE MARSHAL
APPROVED FIRE AND PANIC ONLY
Approval of this plan does not authorize or approve any omission or deviation from applicable regulations. Final approval is subject to field inspection. One set of approved plans shall be available on the project site at all times.
PERMIT NO. 20-N-2332-CP
REVIEWED BY: LEO CATAYLO, OSFM
DATE: 4 / /2021

DGS GENERAL SERVICES
Department of General Services
State of California
Real Estate Services Division
Project Management & Development Branch
707 Third Street, Suite 4-105
West Sacramento, California 95605

NICHOLS MELBURG & ROSSETTO ARCHITECTS + ENGINEERS
300 Knollcrest Drive
Redding, CA. 96002
(530) 222-3300 (530) 222-3538 FAX
http://www.nmrdesign.com

Copyright © 2020
All ideas, designs, arrangements and plans indicated or represented by this drawing are owned by, and the property of, NICHOLS, MELBURG and ROSSETTO and were created, evolved and developed for use on, and in conjunction with, the specified project. None of such ideas, designs, arrangements or plans shall be used by, or disclosed to any person, firm or corporation for any purpose whatsoever without the written permission of NICHOLS, MELBURG and ROSSETTO.

LICENSE STAMPS

LICENSED ARCHITECT KYLE MATTHEW JOHNSON No. C-27505 REN. 10/31/21 STATE OF CALIFORNIA

CONSULTANT

DRAWING STATUS
CONSTRUCTION DOCUMENTS

ISSUE

No.	Date	Description
1	10/20/2020	INITIAL PLAN REVIEW
2	01/22/2021	AGENCY RESUBMITTAL
3	03/22/2021	AGENCY RESUBMITTAL

If drawing is not 30" x 42" it is a reduced print

PROJECT
RESIDENTIAL CENTER, UKIAH: REPLACEMENT OF EXISTING RESIDENTIAL CENTER
440 EAST HILL ROAD
WILLITS, CALIFORNIA 95490
MENDOCINO COUNTY
CALIFORNIA CONSERVATION CORP

Supervisor	Designed	Drawn
KJM	DMH	Author

DSA Application No.
02-118630

SHEET TITLE
ENLARGED FLOOR PLAN

DGS Project Number: 000000000001826
NMR Project Number: 18-6456

Reference North: NORTH
Sheet Scale: As indicated
Sheet Number: A220C

ISSUE DATE
July 9, 2021

Plot Date: 3/19/2021 8:14:45 AM
File Name: BIM 360://CC-Willits Residential Center/A_CCC-WRC-COMET.rvt

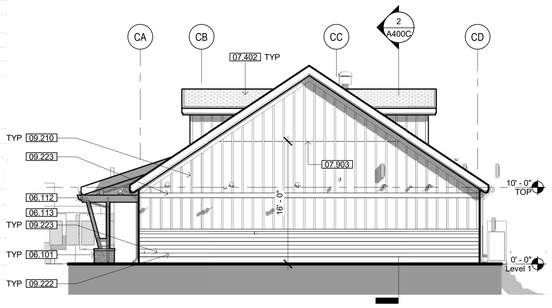

3 SOUTH ELEVATION

SCALE: 1/8" = 1'-0"

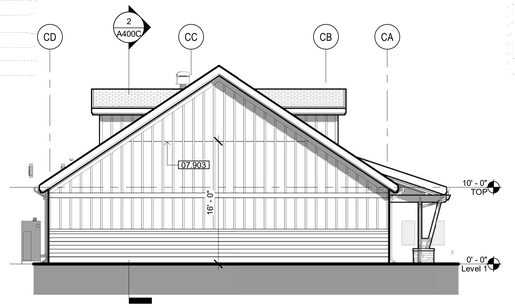

2 NORTH ELEVATION

SCALE: 1/8" = 1'-0"

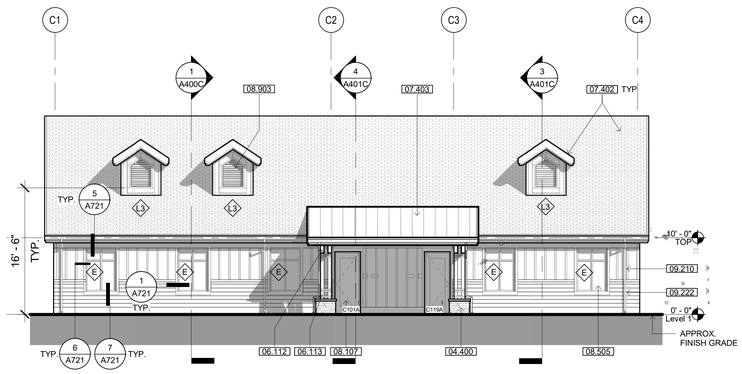

4 WEST ELEVATION

SCALE: 1/8" = 1'-0"

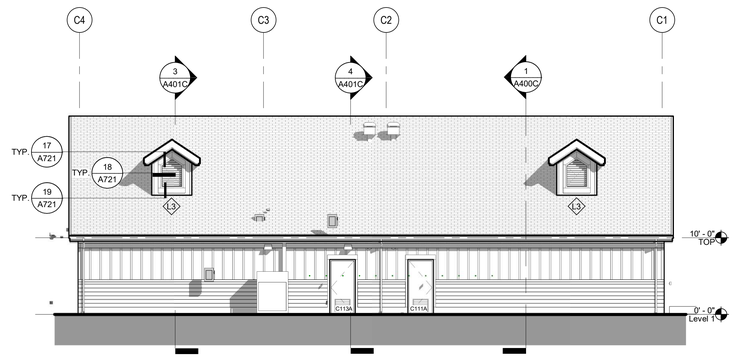

1 EAST ELEVATION

SCALE: 1/8" = 1'-0"

KEYNOTE

04.400	ADHERED STONE VENEER WAINSCOT
06.101	2X FRAMING
06.112	HEAVY TIMBER BEAM, PAINTED
06.113	HEAVY TIMBER COLUMN, PAINTED
07.402	COMPOSITION SHINGLE ROOFING
07.403	STANDING SEAM METAL ROOF SYSTEM, FACTORY PRE-FINISHED
07.903	BOARD & BATTEN SIDING JOINT FLASHING, SEE DETAIL 16/A800
08.107	INSULATED METAL DOOR IN HOLLOW METAL FRAME, PAINTED
08.505	DUAL-GLAZED VINYL WINDOWS
08.903	OUTDOOR AIR INTAKE LOUVER
09.210	FIBER CEMENT BATTENS O/ FIBER CEMENT SIDING PANELS O/ RIGID INSULATION
09.222	FIBER CEMENT LAP SIDING SYSTEM O/ RIGID INSULATION
09.223	FIBER CEMENT TRIM

EXTERIOR ELEV. LEGEND

B##X — DOOR TAG - SEE SCHEDULE, SHEET A710

X — WINDOW TAG - SEE SCHEDULE, SHEET A720

IDENTIFICATION STAMP
DIV. OF THE STATE ARCHITECT
APP: 02-118630 INC:
REVIEWED FOR
SS ☐ FLS ☐ ACS ☑
DATE: 04/13/2021

OFFICE OF THE STATE FIRE MARSHAL
APPROVED FIRE AND PANIC ONLY
Approval of this plan does not authorize or approve any omission or deviation from applicable regulations. Final approval is subject to field inspection. One set of approved plans shall be available on the project site at all times.
PERMIT NO. 20-N-2332-CP
REVIEWED BY: LEO CATAYLO, OSFM
DATE: 4 / /2021

DGS GENERAL SERVICES
Department of General Services
State of California
Real Estate Services Division
Project Management & Development Branch
707 Third Street, Suite 4-105
West Sacramento, California 95605

NICHOLS MELBURG & ROSSETTO
ARCHITECTS + ENGINEERS
300 Knollcrest Drive
Redding, CA. 96002
(530) 222-3300 (530) 222-3538 FAX
http://www.nmrdesign.com

Copyright © 2020
All ideas, designs, arrangements and plans indicated or represented by this drawing are owned by, and the property of, NICHOLS, MELBURG and ROSSETTO and were created, evolved and developed for use on, and in conjunction with, the specified project. None of such ideas, designs, arrangements or plans shall be used by, or disclosed to any person, firm or corporation for any purpose whatsoever without the written permission of NICHOLS, MELBURG and ROSSETTO

LICENSE STAMPS

LICENSED ARCHITECT KYLE MATTHEW ROSSETTO C-27504 RENEWAL 10/31/21 STATE OF CALIFORNIA

CONSULTANT

DRAWING STATUS
CONSTRUCTION DOCUMENTS

ISSUE

No.	Date	Description
1	10/20/2020	INITIAL PLAN REVIEW
2	01/22/2021	AGENCY RESUBMITTAL
3	03/22/2021	AGENCY RESUBMITTAL

If drawing is not 30" x 42" it is a reduced print

PROJECT
RESIDENTIAL CENTER, UKIAH: REPLACEMENT OF EXISTING RESIDENTIAL CENTER
440 EAST HILL ROAD
WILLITS, CALIFORNIA 95490
MENDOCINO COUNTY
CALIFORNIA CONSERVATION CORP

Supervisor	Designed	Drawn
KJM	DMH	Author

DSA Application No.
02-118630

SHEET TITLE
COMET EXTERIOR ELEVATIONS

DGS Project Number	NMR Project Number
000000000001826	18-6456

Reference North — Sheet Scale 1/8" = 1'-0"

Sheet Number
A300C

ISSUE DATE
July 9, 2021

Plot Date: 3/19/2021 12:22:24 PM
File Name: BIM 360://CC2-Willits Residential Center/A_CCC-WRC-COMET.rvt

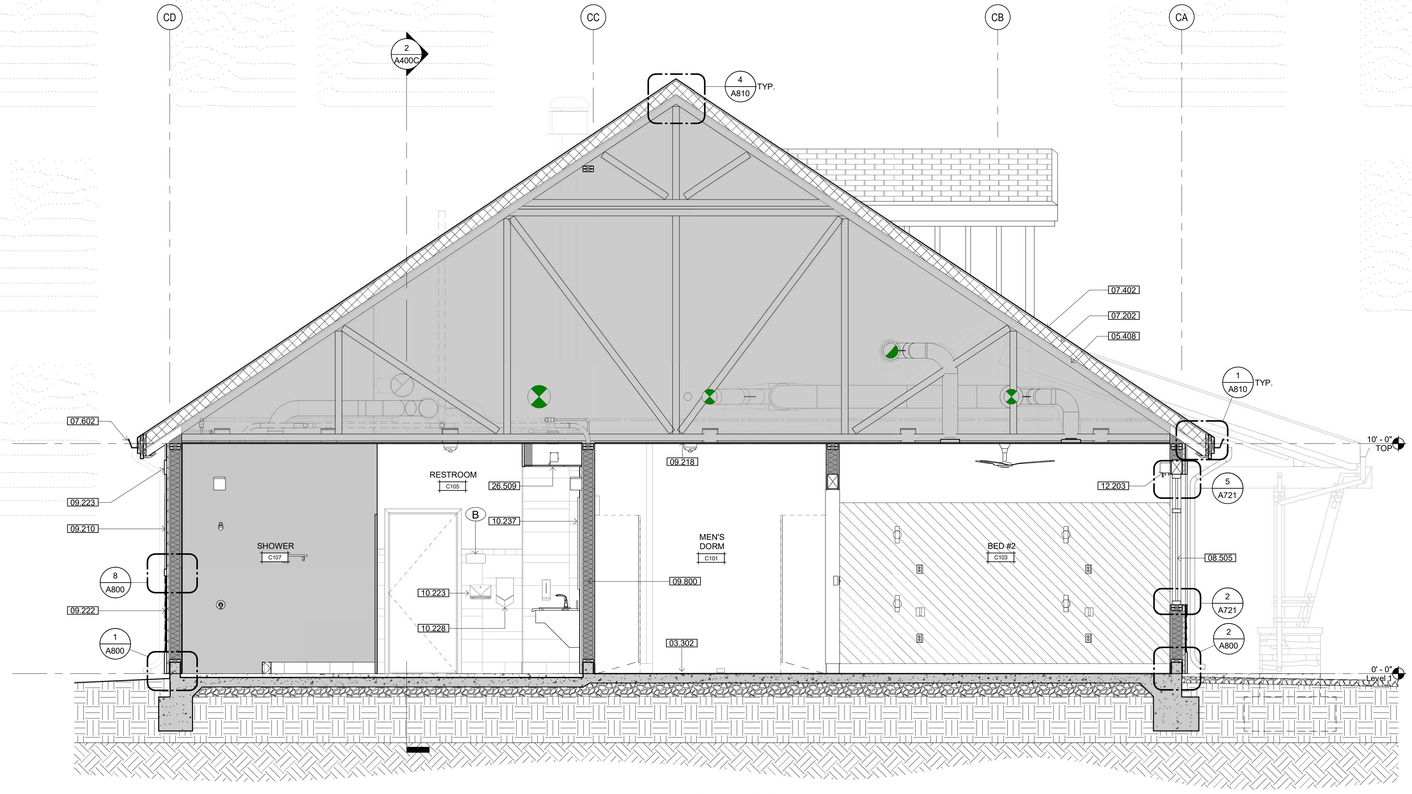

1 BUILDING SECTION

SCALE: 3/8" = 1'-0"

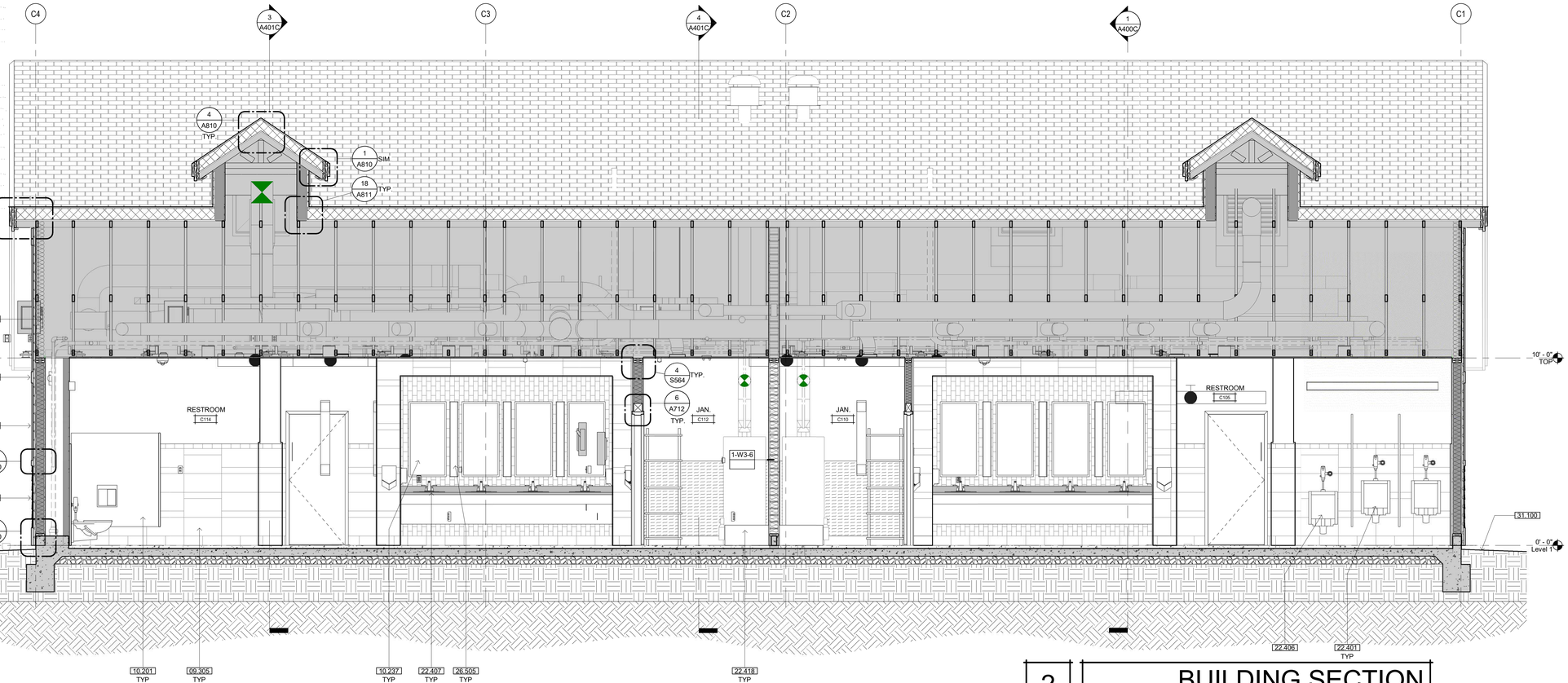

2 BUILDING SECTION

SCALE: 3/8" = 1'-0"

KEYNOTES

03.302	CONCRETE SLAB, SEE STRUCTURAL DRAWINGS
05.408	ROOF TRUSS
07.202	RIGID INSULATION
07.203	BATT INSULATION
07.402	COMPOSITION SHINGLE ROOFING
07.602	PRE-FINISHED METAL GUTTER
08.505	DUAL-GLAZED VINYL WINDOWS
09.210	FIBER CEMENT BATTENS O/ FIBER CEMENT SIDING PANELS O/ RIGID INSULATION
09.218	GYPSUM BOARD CEILING ATTACHED TO BOTTOM CORD OF ROOF TRUSS
09.222	FIBER CEMENT LAP SIDING SYSTEM O/ RIGID INSULATION
09.223	FIBER CEMENT TRIM
09.305	WALL TILE, TYP. - SEE FINISH SCHEDULE
09.800	ACOUSTIC INSULATION SYSTEM
10.201	TOILET COMPARTMENT - OVERHEAD BRACE - SEE 8/A960
10.223	SURFACE MOUNTED PAPER TOWEL DISPENSER
10.228	HAND DRYER
10.237	24"W X 48"H MIRROR
12.203	DOUBLE ROLL WINDOW SHADE, MANUAL. SEE DETAIL 19/A961
22.401	URINAL - SEE PLUMBING DRAWINGS
22.406	ACCESSIBLE URINAL - SEE PLUMBING DRAWINGS
22.407	ACCESSIBLE SINK - SEE PLUMBING DRAWINGS
22.418	JANITOR SINK-SEE PLUMBING DRAWINGS
26.505	RECESSED LIGHT FIXTURE
26.509	LINEAR LED LIGHT FIXTURE RECESSED INTO CEILING
31.100	APPROXIMATE FINISH GRADE

IDENTIFICATION STAMP
DIV. OF THE STATE ARCHITECT
APP: 02-118630 INC:
REVIEWED FOR
SS ☐ FLS ☐ ACS ☑
DATE: 04/13/2021

OFFICE OF THE STATE FIRE MARSHAL
APPROVED FIRE AND PANIC ONLY
Approval of this plan does not authorize or approve any omission or deviation from applicable regulations. Final approval is subject to field inspection. One set of approved plans shall be available on the project site at all times.
PERMIT NO. 2019-2332-CP
REVIEWED BY: LEO CATAYLO, OSFM
DATE: 4 / /2021

GENERAL SERVICES
Department of General Services
State of California
Real Estate Services Division
Project Management & Development Branch
707 Third Street, Suite 4-105
West Sacramento, California 95605

NICHOLS MELBURG & ROSSETTO
ARCHITECTS + ENGINEERS
300 Knollcrest Drive
Redding, CA. 96002
(530) 222-3300 (530) 222-3538 FAX
http://www.nmrdesign.com

Copyright © 2020
All ideas, designs, arrangements and plans indicated or represented by this drawing are owned by, and the property of, NICHOLS, MELBURG and ROSSETTO and were created, evolved and developed for use on, and in conjunction with, the specified project. None of such ideas, designs, arrangements or plans shall be used by, or disclosed to any person, firm or corporation for any purpose whatsoever without the written permission of NICHOLS, MELBURG and ROSSETTO

LICENSE STAMPS

LICENSED ARCHITECT KYLE MATTHEW ROSSETTO C-27504 REN. 10/31/21 STATE OF CALIFORNIA

CONSULTANT

DRAWING STATUS
CONSTRUCTION DOCUMENTS

ISSUE

No.	Date	Description
1	10/20/2020	INITIAL PLAN REVIEW
2	01/22/2021	AGENCY RESUBMITTAL
3	03/22/2021	AGENCY RESUBMITTAL

If drawing is not 30" x 42" it is a reduced print

PROJECT
RESIDENTIAL CENTER, UKIAH: REPLACEMENT OF EXISTING RESIDENTIAL CENTER
440 EAST HILL ROAD
WILLITS, CALIFORNIA 95490
MENDOCINO COUNTY
CALIFORNIA CONSERVATION CORP

Supervisor	Designed	Drawn
KJM	DMH	NMR

DSA Application No.
02-118630

SHEET TITLE
COMET BUILDING SECTIONS

DGS Project Number	NMR Project Number
000000000001826	18-6456

Reference North
Sheet Scale 3/8" = 1'-0"
Sheet Number A400C

ISSUE DATE
July 9, 2021

Plot Date: 2/16/2021 8:15:56 AM
File Name: BIM 360://C-02 Willits Residential Center/A_CCC-WRC-COMET.rvt

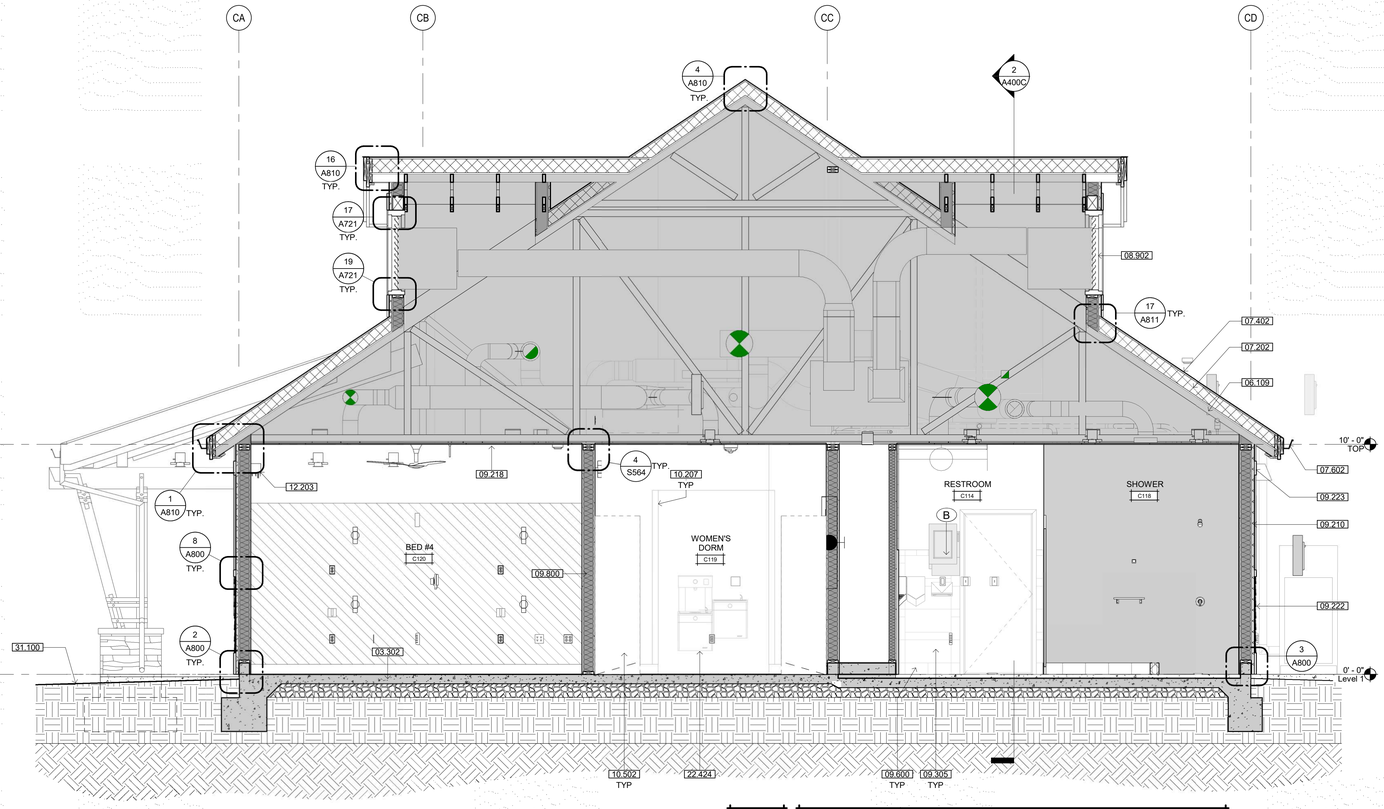

3 BUILDING SECTION

SCALE: 3/8" = 1'-0"

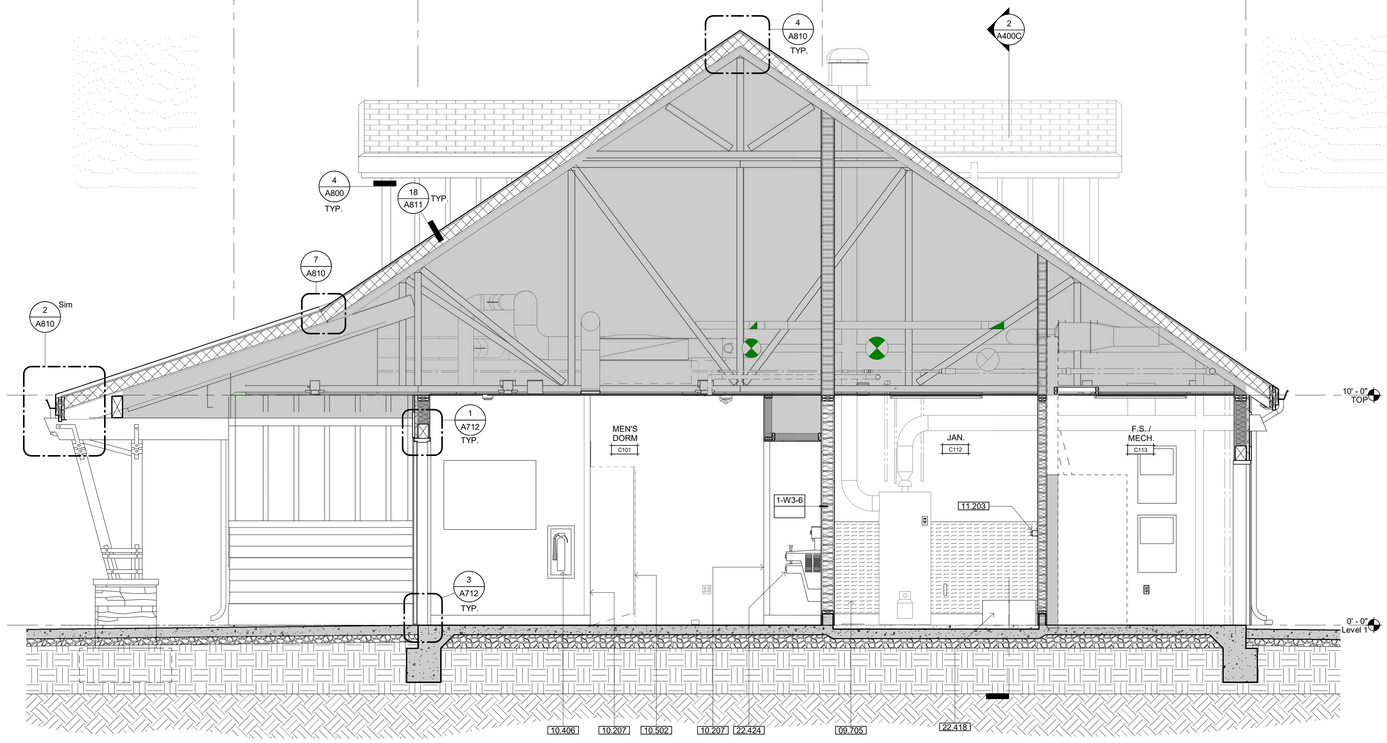

4 BUILDING SECTION

SCALE: 3/8" = 1'-0"

KEYNOTES

03.302	CONCRETE SLAB, SEE STRUCTURAL DRAWINGS
06.109	WOOD FRAMED TRUSS
07.202	RIGID INSULATION
07.402	COMPOSITION SHINGLE ROOFING
07.602	PRE-FINISHED METAL GUTTER
08.902	METAL LOUVER
09.210	FIBER CEMENT BATTENS O/ FIBER CEMENT SIDING PANELS O/ RIGID INSULATION
09.218	GYPSUM BOARD CEILING ATTACHED TO BOTTOM CORD OF ROOF TRUSS
09.222	FIBER CEMENT LAP SIDING SYSTEM O/ RIGID INSULATION
09.223	FIBER CEMENT TRIM
09.305	WALL TILE, TYP. - SEE FINISH SCHEDULE
09.600	BASE-SEE FINISH SCHEDULE
09.705	FRP PANEL-SEE FINISH SCHEDULE
09.800	ACOUSTIC INSULATION SYSTEM
10.207	CORNER GUARD - SEE FINISH SCHEDULE
10.406	SEMI-RECESSED FIRE EXTINGUISHER CABINET PER DETAIL 2B/A960
10.502	2-TIER LOCKERS
11.203	COMBINATION UTILITY SHELF WITH MOP AND BROOM HOLDER
12.203	DOUBLE ROLL WINDOW SHADE, MANUAL. SEE DETAIL 19/A961
22.418	JANITOR SINK-SEE PLUMBING DRAWINGS
22.424	ACCESSIBLE HI-LO DRINKING FOUNTAIN-SEE DETAIL 20/G212
31.100	APPROXIMATE FINISH GRADE

IDENTIFICATION STAMP
DIV. OF THE STATE ARCHITECT
APP: 02-118630 INC:
REVIEWED FOR
SS ☐ FLS ☐ ACS ☑
DATE: 04/13/2021

OFFICE OF THE STATE FIRE MARSHAL
APPROVED FIRE AND PANIC ONLY
Approval of this plan does not authorize or approve any omission or deviation from applicable regulations. Final approval is subject to field inspection. One set of approved plans shall be available on the project site at all times.
PERMIT NO. 20-N-2332-CP
REVIEWED BY: LEO CATAYLO, OSFM
DATE: 4 / /2021

DGS GENERAL SERVICES
Department of General Services
State of California
Real Estate Services Division
Project Management & Development Branch
707 Third Street, Suite 4-105
West Sacramento, California 95605

NICHOLS MELBURG & ROSSETTO
ARCHITECTS + ENGINEERS
300 Knollcrest Drive
Redding, CA. 96002
(530) 222-3300 (530) 222-3538 FAX
http://www.nmrdesign.com

Copyright © 2020
All ideas, designs, arrangements and plans indicated or represented by this drawing are owned by, and the property of, NICHOLS, MELBURG and ROSSETTO and were created, evolved and developed for use on, and in conjunction with, the specified project. None of such ideas, designs, arrangements or plans shall be used by, or disclosed to any person, firm or corporation for any purpose whatsoever without the written permission of NICHOLS, MELBURG and ROSSETTO

LICENSE STAMPS

LICENSED ARCHITECT KYLE MATTHEW ROSSETTO C-27504 REN. 10/31/21 STATE OF CALIFORNIA

CONSULTANT

DRAWING STATUS
CONSTRUCTION DOCUMENTS

ISSUE

No.	Date	Description
1	10/20/2020	INITIAL PLAN REVIEW
2	01/22/2021	AGENCY RESUBMITTAL
3	03/22/2021	AGENCY RESUBMITTAL

If drawing is not 30" x 42" it is a reduced print

PROJECT
RESIDENTIAL CENTER, UKIAH: REPLACEMENT OF EXISTING RESIDENTIAL CENTER
440 EAST HILL ROAD
WILLITS, CALIFORNIA 95490
MENDOCINO COUNTY
CALIFORNIA CONSERVATION CORP

Supervisor	Designed	Drawn
KJM	DMH	Author

DSA Application No.
02-118630

SHEET TITLE
COMET BUILDING SECTIONS

DGS Project Number	NMR Project Number
000000000001826	18-6456

Reference North | Sheet Scale 3/8" = 1'-0"
Sheet Number A401C

ISSUE DATE
July 9, 2021

Plot Date: 2/10/2021 8:13:36 AM
File Name: BIM 360://C-12 Willits Residential Center/A_CCC-WRC-COMET.rvt

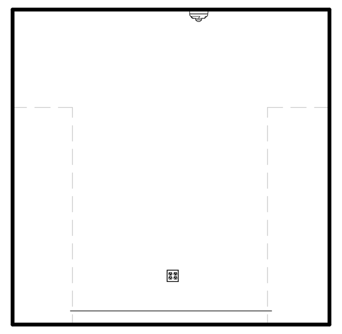

1 C101 MEN'S DORM - NORTH
1/4" = 1'-0"

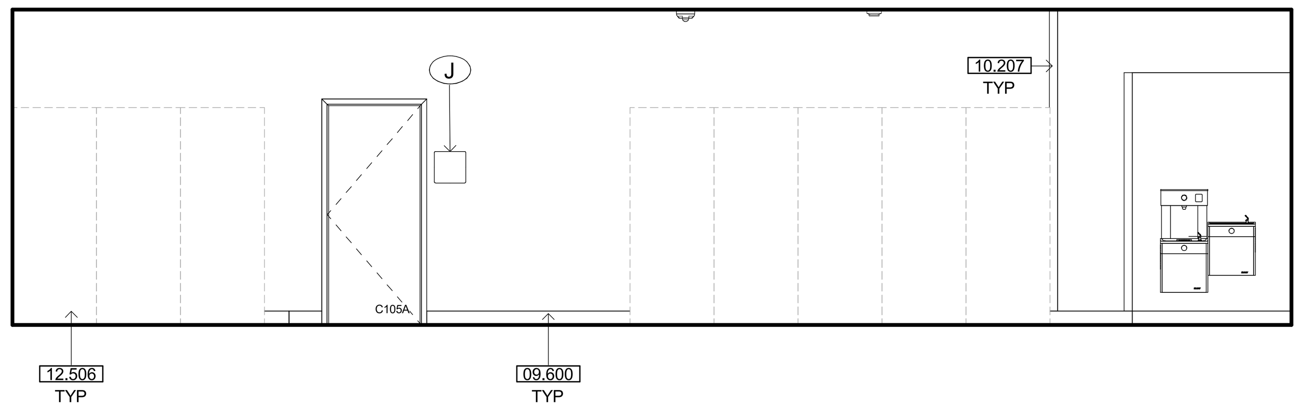

2 C101 MEN'S DORM - EAST
1/4" = 1'-0"

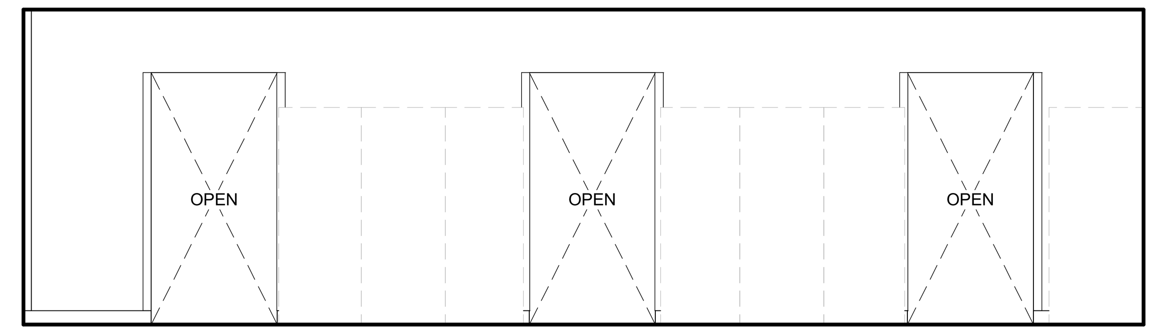

3 C101 MEN'S DORM - WEST
1/4" = 1'-0"

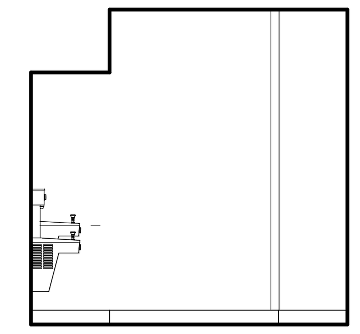

4 C101 MEN'S DORM - SOUTH
1/4" = 1'-0"

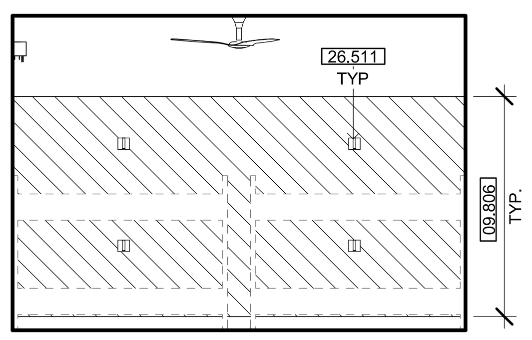

5 C104 MEN'S DORM - NORTH
1/4" = 1'-0"

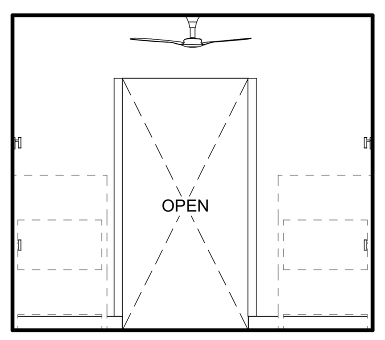

6 C104 MEN'S DORM - EAST
1/4" = 1'-0"

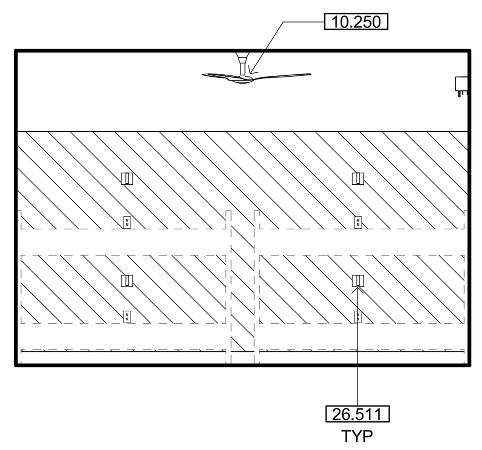

7 C104 MEN'S DORM - SOUTH
1/4" = 1'-0"

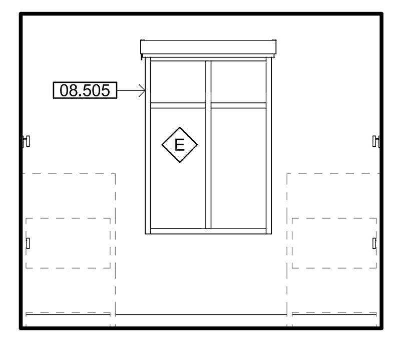

8 C104 MEN'S DORM - WEST
1/4" = 1'-0"

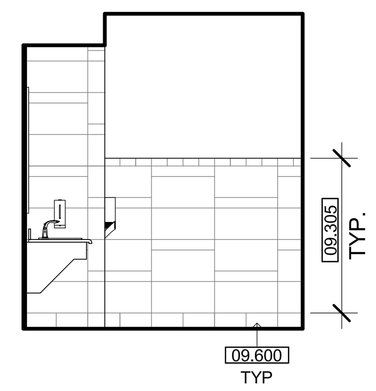

9 C105 RESTROOM - NORTH
1/4" = 1'-0"

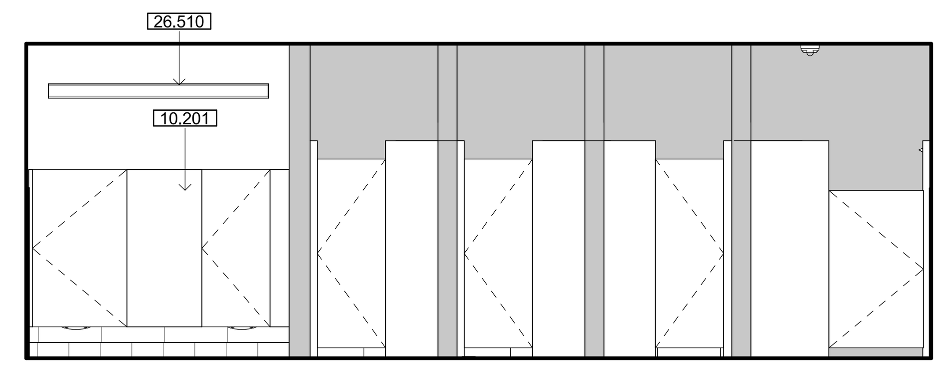

10 C105 RESTROOM - EAST
1/4" = 1'-0"

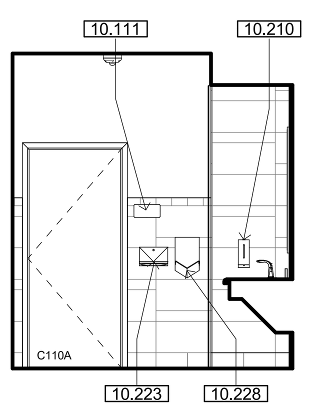

11 C105 RESTROOM - SOUTH
1/4" = 1'-0"

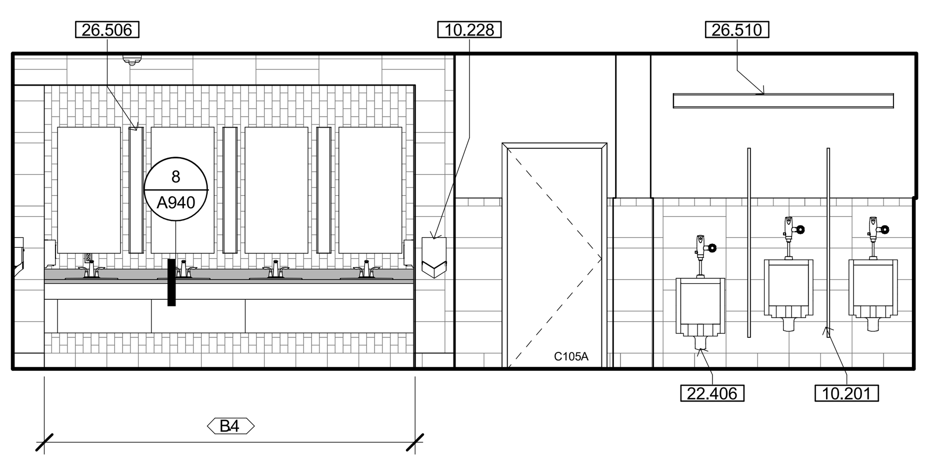

12 C105 RESTROOM - WEST
1/4" = 1'-0"

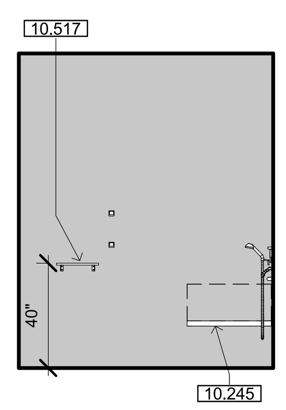

13 C109 SHOWER - NORTH
1/4" = 1'-0"

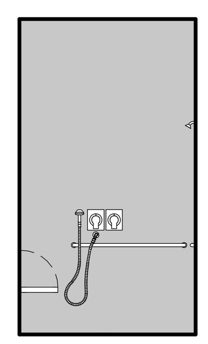

14 C109 SHOWER - EAST
1/4" = 1'-0"

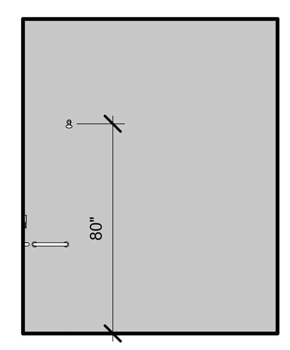

15 C109 SHOWER - SOUTH
1/4" = 1'-0"

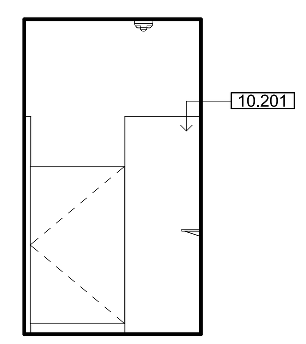

16 C109 SHOWER - WEST
1/4" = 1'-0"

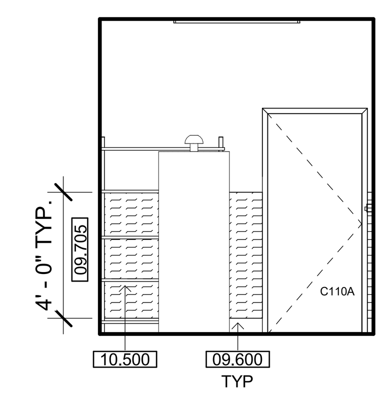

17 C110 JANITORIAL- NORTH
1/4" = 1'-0"

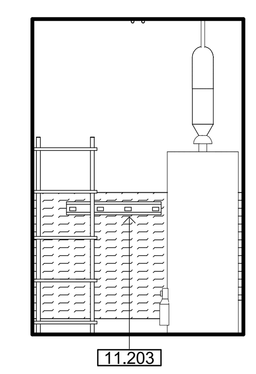

18 C110 JANITORIAL- EAST
1/4" = 1'-0"

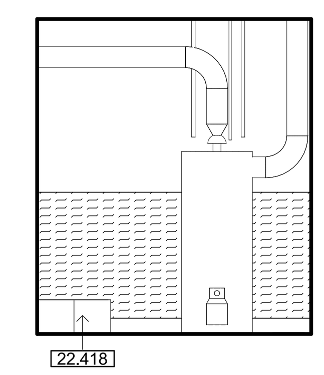

19 C110 JANITORIAL- SOUTH
1/4" = 1'-0"

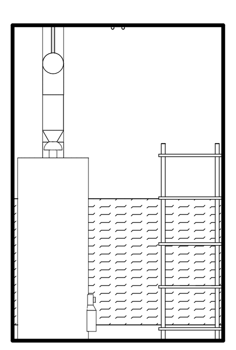

20 C110 JANITORIAL- WEST
1/4" = 1'-0"

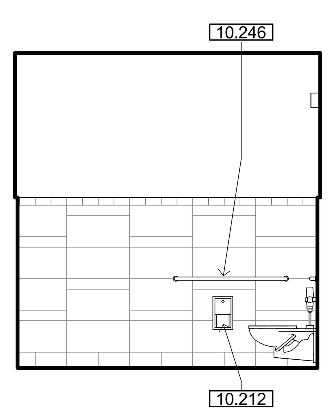

21 C114 ADA TOILET - EAST
1/4" = 1'-0"

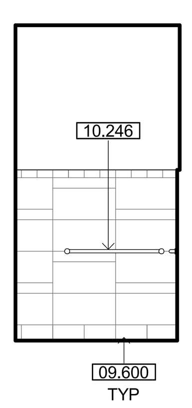

22 C114 ADA TOILET - NORTH
1/4" = 1'-0"

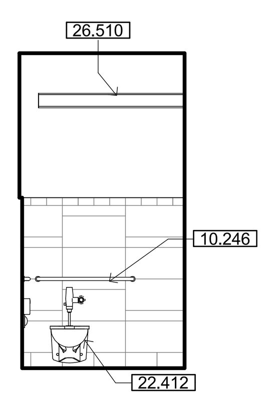

23 C114 ADA TOILET - SOUTH
1/4" = 1'-0"

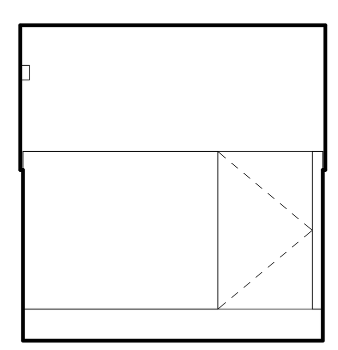

24 C114 ADA TOILET - WEST
1/4" = 1'-0"

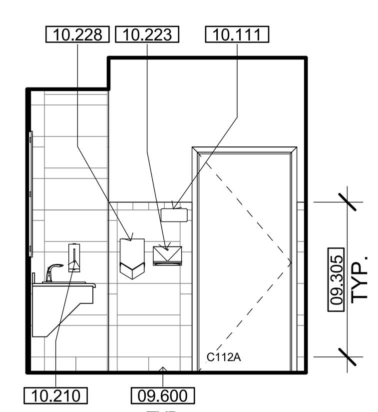

25 C114 WOMEN'S RESTROOM - NORTH
1/4" = 1'-0"

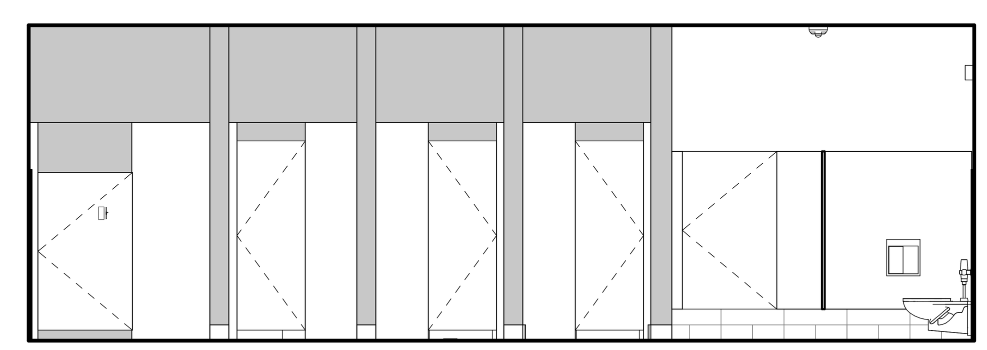

26 C114 WOMEN'S RESTROOM - EAST
1/4" = 1'-0"

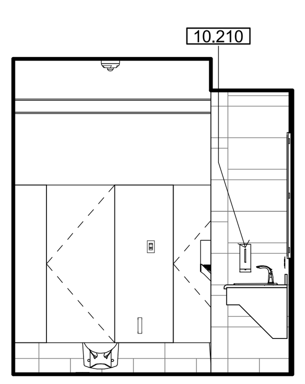

27 C114 WOMEN'S RESTROOM - SOUTH
1/4" = 1'-0"

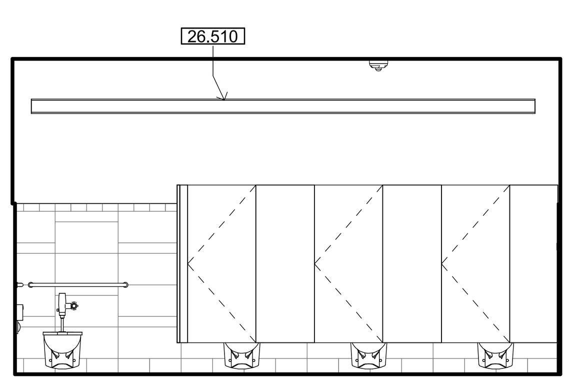

28 C114 WOMEN'S RESTROOM - SOUTH2
1/4" = 1'-0"

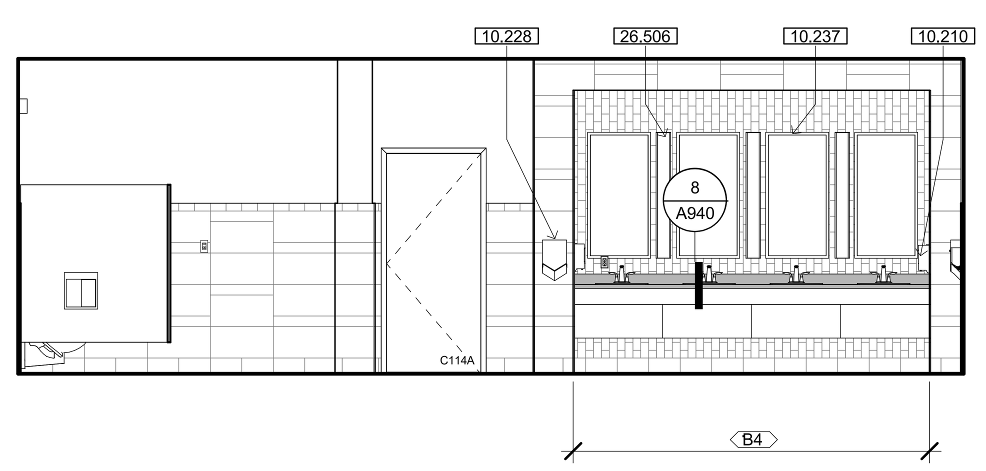

29 C114 WOMEN'S RESTROOM - WEST
1/4" = 1'-0"

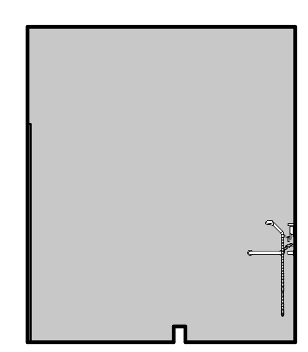

30 C118 SHOWER - NORTH
1/4" = 1'-0"

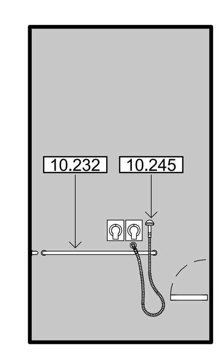

31 C118 SHOWER - EAST
1/4" = 1'-0"

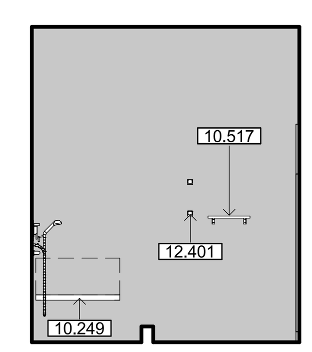

32 C118 SHOWER - SOUTH
1/4" = 1'-0"

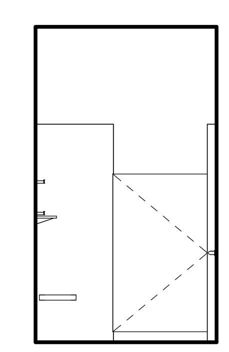

33 C118 SHOWER - WEST
1/4" = 1'-0"

Plot Date: 3/19/2021 8:13:48 AM
File Name: BIM 360://CCC Willits Residential Center/A_CCC-WRC-COMET.rvt

KEYNOTES

08.505	DUAL-GLAZED VINYL WINDOWS
09.305	WALL TILE, TYP. - SEE FINISH SCHEDULE
09.600	BASE-SEE FINISH SCHEDULE
09.705	FRP PANEL-SEE FINISH SCHEDULE
09.806	ACOUSTICAL WALL TILE
10.111	SIGNAGE - SEE SIGNAGE TYPES
10.201	TOILET COMPARTMENT - OVERHEAD BRACE - SEE 8/A960
10.207	CORNER GUARD - SEE FINISH SCHEDULE
10.210	SOAP DISPENSER
10.212	SEMI-RECESSED TOILET TISSUE DISPENSER
10.223	SURFACE MOUNTED PAPER TOWEL DISPENSER
10.228	HAND DRYER
10.232	GRAB BAR - SEE DETAIL 4/A960
10.237	24"W X 48"H MIRROR
10.245	AT ACCESSIBLE SHOWER, PROVIDE: STAINLESS STEEL SHOWER ROD WITH CURTAIN AND S.S. HANGERS, FOLD-DOWN SEAT, 24"/36" CORNER GRAB BARS, RECESSED S.S. SOAP DISH AND 60" LONG FLEXIBLE SHOWER SPRAY HOSE
10.246	GRAB BARS, 42" AT SIDE & 36" AT BACK - SEE DETAIL --/---
10.249	FOLD DOWN SHOWER SEAT
10.250	CEILING FAN
10.500	METAL STORAGE SHELVING UNIT
10.517	STAINLESS STEEL SHELF, 4" MAX. PROJECTION
11.203	COMBINATION UTILITY SHELF WITH MOP AND BROOM HOLDER
12.401	TOWEL HOOK
12.506	LOCKERS - OFOI
22.406	ACCESSIBLE URINAL - SEE PLUMBING DRAWINGS
22.412	ACCESSIBLE WALL HUNG TOILET
22.418	JANITOR SINK-SEE PLUMBING DRAWINGS
26.506	WALL MOUNTED LIGHT FIXTURE-CENTER BETWEEN MIRROR
26.510	WALL MOUNTED UP/DOWN LIGHT FIXTURE
26.511	WALL MOUNTED READING LIGHT

INTERIOR ELEV. LEGEND

###X	CASEWORK TAG - SEE SHEET A940
X	SIGNAGE TAG - SEE SHEET A965
B##X	DOOR TAG - SEE SCHEDULE, SHEET A710
X	WINDOW TAG - SEE SCHEDULE, SHEET A720
	GYPSUM BOARD - PAINT
	WALL TILE WT-1/2 OVER CEMENTITIOUS BACKER BOARD
	WALL TILE WT-3 OVER CEMENTITIOUS BACKER BOARD
	FIBER REINFORCED PLASTIC (FRP) WALL PROTECTION OVER GYPSUM BOARD
	SOLID SURFACE PANEL OVER CEMENTITIOUS BACKER BOARD

INTERIOR ELEV. GEN. NOTES

A. GENERAL CONTRACTOR TO PROVIDE STRUCTURAL SUPPORT, BACKING AND/OR METAL REINFORCEMENT IN STUD WALLS AT ALL CASEWORK, CABINETS, SHELVING, EQUIPMENT ETC. REFER TO G212 & G213 FOR TYPICAL MOUNTING HEIGHTS AND ARRANGEMENTS OF COMMON SPECIALTY ITEMS INCLUDING SHOWERS AND TOILET ROOMS.

B. SEE SHEET 18/A960 FOR TYP. ACCESSORY MOUNTING

C. SEE MECHANICAL, ELECTRICAL & LOW VOLTAGE DRAWINGS FOR EXTENT AND LOCATION OF ADDITIONAL WALL MOUNTED ITEMS SUCH AS CARD READERS, THERMOSTATS, SWITCHES, OUTLETS, CLOCKS, NURSECALL LIGHTS, FIRE ALARM, ETC. LOCATE ALL OUTLETS, SWITCHES, EQUIP., RECEPTACLE BOXES & OTHER SIMILAR RELATED ITEMS FOR OWNER'S FINAL APPROVAL PRIOR TO CONDUIT/PIPE INSTALLATION.

D. CONTRACTOR TO COORDINATE LOCATION OF CONTRACTOR OR OWNER FURNISHED ITEMS.

E. REFER TO FINISH SCHEDULE AND SPECIFICATIONS FOR SPECIFIC FINISH MATERIAL.

F. ALL VERTICAL DIMENSIONS ARE FROM FINISHED FLOOR, U.N.O.

G. ALL RECESSED SPECIALTIES SHOWN ON ELEVATIONS THAT ARE LOCATED IN FIRE RATED WALLS ARE TO BE 5-SIDED WITH 5/8" TYPE 'X' GYPBOARD SIMILAR TO 3/A961

H. WHERE OUTLETS, MONITORS AND LIGHT SWITCHES ARE NOT DIMENSIONED AT A GIVEN ELEVATION, CAN BE ASSUMED TO BE SIMILAR TO THE ONE ON THE ELEVATION THAT IS DIMENSIONED. WHERE OUTLETS ARE DIMENSIONED ON AN ELEVATION THE TYPICAL FRAMING MUST BE ALTERED AND/OR STUDS HEADED OFF TO ACCOMMODATE DIMENSIONED LOCATIONS AND SHOWN.

I. ALL WALL SURFACES IN NEED OF REPAIR SHALL BE FILLED, SPACKLED AND TEXTURED TO MATCH THE EXISTING WALLS. FINISH AS SPECIFIED.

BUILT-IN CASEWORK NOTES

AA. PROVIDE BACKSPLASH AND ENDSPLASH OF MATERIAL MATCHING COUNTERTOP ON ALL COUNTERTOPS U.O.N. BACKSPLASH TO RETURN AT CABINET ENDS - SEE DETAIL OR NOTES FOR HEIGHTS.

BB. PROVIDE PLAM END PANEL WHERE COUNTERTOP ENDS WITHOUT BASE UNIT OR SUPPORTING WALL.

CC. PROVIDE "FLOATING WALL-MOUNT BRACKET" @ 32" O.C. AT ANY OPEN COUNTER WITH SPAN GREATER THAN 3'-0" WIDTH. SEE 10/A940. CONTRACTOR TO VERFIY COORDINATION OF TRADES FOR IN-WALL INSTALLATION

DD. PROVIDE (1) ADJUSTABLE SHELF AT BASE CABINETS EXCEPT SINK BASE, U.O.N.

EE. FIELD VERIFY ALL DIMENSIONS AND EQUIPMENT SIZES PRIOR TO CASEWORK FABRICATION.

FF. PROVIDE 3" DIAMETER GROMMETS AT BACK OF COUNTERTOP AS DIRECTED BY OWNER.

GG. ALL SHELVES ARE ADJUSTABLE, U.O.N.

IDENTIFICATION STAMP
DIV. OF THE STATE ARCHITECT
APP: 02-118630 INC:
REVIEWED FOR
SS ☐ FLS ☐ ACS ☑
DATE: 04/13/2021

OFFICE OF THE STATE FIRE MARSHAL
APPROVED FIRE AND PANIC ONLY
Approval of this plan does not authorize or approve any omission or deviation from applicable regulations. Final approval is subject to field inspection. One set of approved plans shall be available on the project site at all times.
PERMIT NO.: 20-N-2332-CP
REVIEWED BY: LITO CATAYLO, OSFM
DATE: 3/1 /2021

GENERAL SERVICES
Department of General Services
State of California
Real Estate Services Division
Project Management & Development Branch
707 Third Street, Suite 4-105
West Sacramento, California 95605

NICHOLS MELBURG & ROSSETTO
ARCHITECTS + ENGINEERS
300 Knollcrest Drive
Redding, CA. 96002
(530) 222-3300 (530) 222-3538 FAX
http://www.nmrdesign.com

Copyright © 2020
All ideas, designs, arrangements and plans indicated or represented by this drawing are owned by, and the property of, NICHOLS, MELBURG and ROSSETTO and were created, evolved and developed for use on, and in conjunction with, the specified project. None of such ideas, designs, arrangements or plans shall be used by, or disclosed to any person, firm or corporation for any purpose whatsoever without the written permission of NICHOLS, MELBURG and ROSSETTO.

LICENSE STAMPS

LICENSED ARCHITECT
KYLE MATTI
C 27504
REN. 10/31/21
STATE OF CALIFORNIA

CONSULTANT

DRAWING STATUS
CONSTRUCTION DOCUMENTS

ISSUE

No.	Date	Description
1	10/20/2020	INITIAL PLAN REVIEW
2	01/22/2021	AGENCY RESUBMITTAL
3	03/22/2021	AGENCY RESUBMITTAL

If drawing is not 30" x 42" it is a reduced print

PROJECT
RESIDENTIAL CENTER, UKIAH: REPLACEMENT OF EXISTING RESIDENTIAL CENTER
440 EAST HILL ROAD
WILLITS, CALIFORNIA 95490
MENDOCINO COUNTY
CALIFORNIA CONSERVATION CORP

Supervisor	Designed	Drawn
KJM	DMH	NMR

DSA Application No.
02-118630

SHEET TITLE
COMET INTERIOR ELEVATIONS

DGS Project Number 000000000001826
NMR Project Number 18-6456

Reference North
NORTH
Sheet Scale: As indicated
Sheet Number: A500C

ISSUE DATE
July 9, 2021

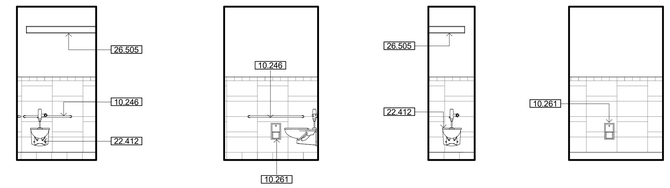

1 C105 ADA TOILET - EAST
1/4" = 1'-0"

2 C105 ADA TOILET - NORTH
1/4" = 1'-0"

3 C105 TOILET - EAST
1/4" = 1'-0"

4 C105 TOILET - SOUTH
1/4" = 1'-0"

KEYNOTES

10.246	GRAB BARS, 42" AT SIDE & 36" AT BACK - SEE DETAIL --/----
10.261	RECESSED TOILET TISSUE DISPENSER
22.412	ACCESSIBLE WALL HUNG TOILET
26.505	RECESSED LIGHT FIXTURE

INTERIOR ELEV. LEGEND

###X	CASEWORK TAG - SEE SHEET A940
X	SIGNAGE TAG - SEE SHEET A965
B##X	DOOR TAG - SEE SCHEDULE, SHEET A710
X	WINDOW TAG - SEE SCHEDULE, SHEET A720
	GYPSUM BOARD - PAINT
	WALL TILE WT-1/2 OVER CEMENTITIOUS BACKER BOARD
	WALL TILE WT-3 OVER CEMENTITIOUS BACKER BOARD
	FIBER REINFORCED PLASTIC (FRP) WALL PROTECTION OVER GYPSUM BOARD
	SOLID SURFACE PANEL OVER CEMENTITIOUS BACKER BOARD

INTERIOR ELEV. GEN. NOTES

A. GENERAL CONTRACTOR TO PROVIDE STRUCTURAL SUPPORT, BACKING AND/OR METAL REINFORCEMENT IN STUD WALLS AT ALL CASEWORK, CABINETS, SHELVING, EQUIPMENT ETC. REFER TO G212 & G213 FOR TYPICAL MOUNTING HEIGHTS AND ARRANGEMENTS OF COMMON SPECIALTY ITEMS INCLUDING SHOWERS AND TOILET ROOMS.

B. SEE SHEET 18/A960 FOR TYP. ACCESSORY MOUNTING

C. SEE MECHANICAL, ELECTRICAL & LOW VOLTAGE DRAWINGS FOR EXTENT AND LOCATION OF ADDITIONAL WALL MOUNTED ITEMS SUCH AS CARD READERS, THERMOSTATS, SWITCHES, OUTLETS, CLOCKS, NURSECALL LIGHTS, FIRE ALARM, ETC. LOCATE ALL OUTLETS, SWITCHES, EQUIP., RECEPTACLE BOXES & OTHER SIMILAR RELATED ITEMS FOR OWNER'S FINAL APPROVAL PRIOR TO CONDUIT/PIPE INSTALLATION.

D. CONTRACTOR TO COORDINATE LOCATION OF CONTRACTOR OR OWNER FURNISHED ITEMS.

E. REFER TO FINISH SCHEDULE AND SPECIFICATIONS FOR SPECIFIC FINISH MATERIAL.

F. ALL VERTICAL DIMENSIONS ARE FROM FINISHED FLOOR, U.N.O.

G. ALL RECESSED SPECIALTIES SHOWN ON ELEVATIONS THAT ARE LOCATED IN FIRE RATED WALLS ARE TO BE 5-SIDED WITH 5/8" TYPE 'X' GYPBOARD SIMILAR TO 3/A961

H. WHERE OUTLETS, MONITORS AND LIGHT SWITCHES ARE NOT DIMENSIONED AT A GIVEN ELEVATION, CAN BE ASSUMED TO BE SIMILAR TO THE ONE ON THE ELEVATION THAT IS DIMENSIONED. WHERE OUTLETS ARE DIMENSIONED ON AN ELEVATION THE TYPICAL FRAMING MUST BE ALTERED AND/OR STUDS HEADED OFF TO ACCOMMODATE DIMENSIONED LOCATIONS AND SHOWN.

I. ALL WALL SURFACES IN NEED OF REPAIR SHALL BE FILLED, SPACKLED AND TEXTURED TO MATCH THE EXISTING WALLS. FINISH AS SPECIFIED.

BUILT-IN CASEWORK NOTES

AA. PROVIDE BACKSPLASH AND ENDSPLASH OF MATERIAL MATCHING COUNTERTOP ON ALL COUNTERTOPS U.O.N. BACKSPLASH TO RETURN AT CABINET ENDS - SEE DETAIL OR NOTES FOR HEIGHTS.

BB. PROVIDE PLAM END PANEL WHERE COUNTERTOP ENDS WITHOUT BASE UNIT OR SUPPORTING WALL.

CC. PROVIDE "FLOATING WALL-MOUNT BRACKET" @ 32" O.C. AT ANY OPEN COUNTER WITH SPAN GREATER THAN 3'-0" WIDTH. SEE 10/A940. CONTRACTOR TO VERFIY COORDINATION OF TRADES FOR IN-WALL INSTALLATION

DD. PROVIDE (1) ADJUSTABLE SHELF AT BASE CABINETS EXCEPT SINK BASE, U.O.N.

EE. FIELD VERIFY ALL DIMENSIONS AND EQUIPMENT SIZES PRIOR TO CASEWORK FABRICATION.

FF. PROVIDE 3" DIAMETER GROMMETS AT BACK OF COUNTERTOP AS DIRECTED BY OWNER.

GG. ALL SHELVES ARE ADJUSTABLE, U.O.N.

IDENTIFICATION STAMP
DIV. OF THE STATE ARCHITECT
APP: 02-118630 INC:
REVIEWED FOR
SS ☐ FLS ☐ ACS ☑
DATE: 04/13/2021

OFFICE OF THE STATE FIRE MARSHAL
APPROVED FIRE AND PANIC ONLY
Approval of this plan does not authorize or approve any omission or deviation from applicable regulations. Final approval is subject to field inspection. One set of approved plans shall be available on the project site at all times.
PERMIT NO: 20-N-2332-CP
REVIEWED BY: LEO CATAYLO, OSFM
DATE: 4 / /2021

DGS GENERAL SERVICES
Department of General Services
State of California
Real Estate Services Division
Project Management & Development Branch
707 Third Street, Suite 4-105
West Sacramento, California 95605

NICHOLS MELBURG & ROSSETTO
ARCHITECTS + ENGINEERS
300 Knollcrest Drive
Redding, CA. 96002
(530) 222-3300 (530) 222-3538 FAX
http://www.nmrdesign.com

Copyright © 2020
All ideas, designs, arrangements and plans indicated or represented by this drawing are owned by, and the property of, NICHOLS, MELBURG and ROSSETTO and were created, evolved and developed for use on, and in conjunction with, the specified project. None of such ideas, designs, arrangements or plans shall be used by, or disclosed to any person, firm or corporation for any purpose whatsoever without the written permission of NICHOLS, MELBURG and ROSSETTO

LICENSE STAMPS

LICENSED ARCHITECT KYLE MATTHEW ROSSETTO C-27504 RENEWAL 10/31/21 STATE OF CALIFORNIA

CONSULTANT

DRAWING STATUS
CONSTRUCTION DOCUMENTS

ISSUE

No.	Date	Description
1	10/20/2020	INITIAL PLAN REVIEW
2	01/22/2021	AGENCY RESUBMITTAL
3	03/22/2021	AGENCY RESUBMITTAL

If drawing is not 30" x 42" it is a reduced print

PROJECT
RESIDENTIAL CENTER, UKIAH: REPLACEMENT OF EXISTING RESIDENTIAL CENTER
440 EAST HILL ROAD
WILLITS, CALIFORNIA 95490
MENDOCINO COUNTY
CALIFORNIA CONSERVATION CORP

Supervisor	Designed	Drawn
KJM	DMH	NMR

DSA Application No.
02-118630

SHEET TITLE
COMET INTERIOR ELEVATIONS

DGS Project Number	NMR Project Number
000000000001826	18-6456

Reference North: NORTH
Sheet Scale: As indicated
Sheet Number: A501C

ISSUE DATE
July 9, 2021

Plot Date: 5/19/2021 8:13:51 AM
File Name: 18M 360 /CCC-Willits Residential Center/A_CCC-WRC-COMET.rvt

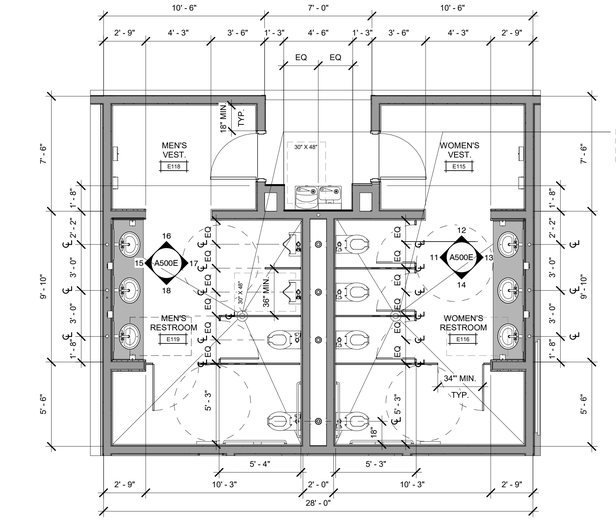

FLOOR SLOPES TO DRAIN SHALL NOT EXCEED 2% IN ANY DIRECTION

3 MULTI-OCCUPANCY RESTROOM

SCALE: 1/4" = 1'-0"

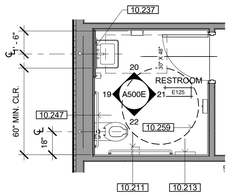

4 ENLARGED FLOOR PLAN - RESTROOM

SCALE: 1/4" = 1'-0"

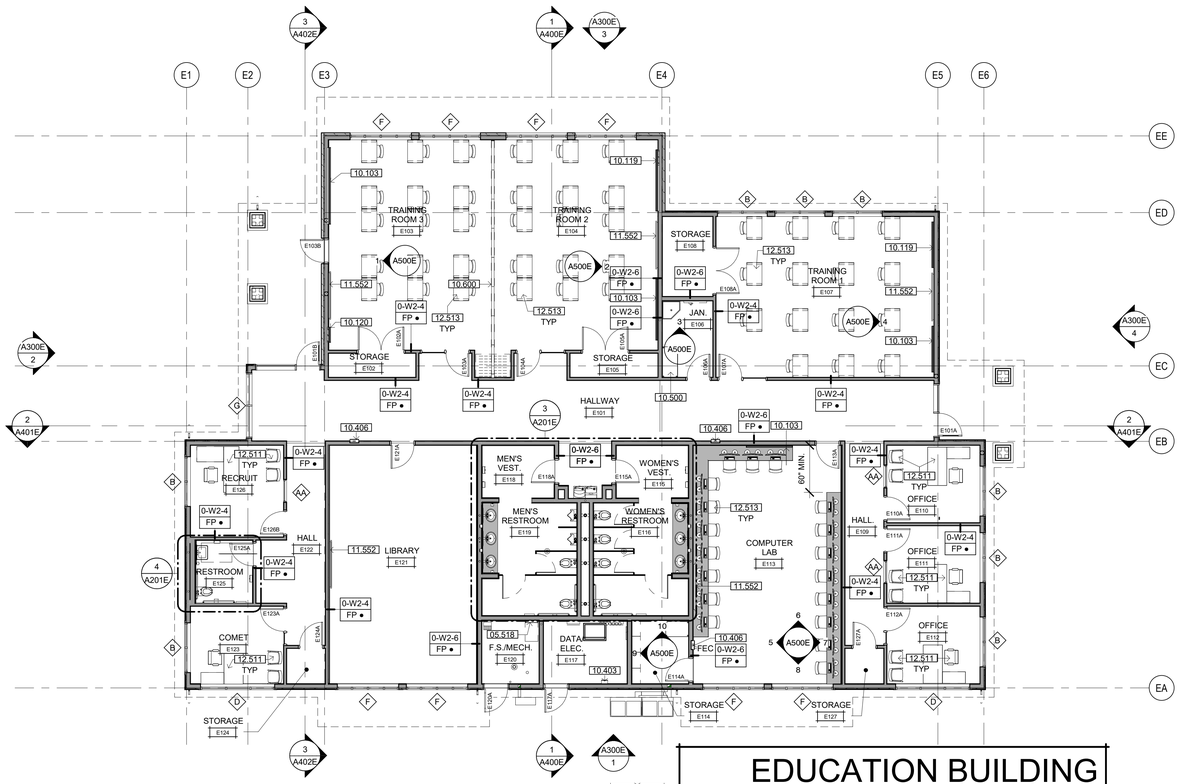

EDUCATION BUILDING FLOOR PLAN

SCALE: 1/8" = 1'-0"

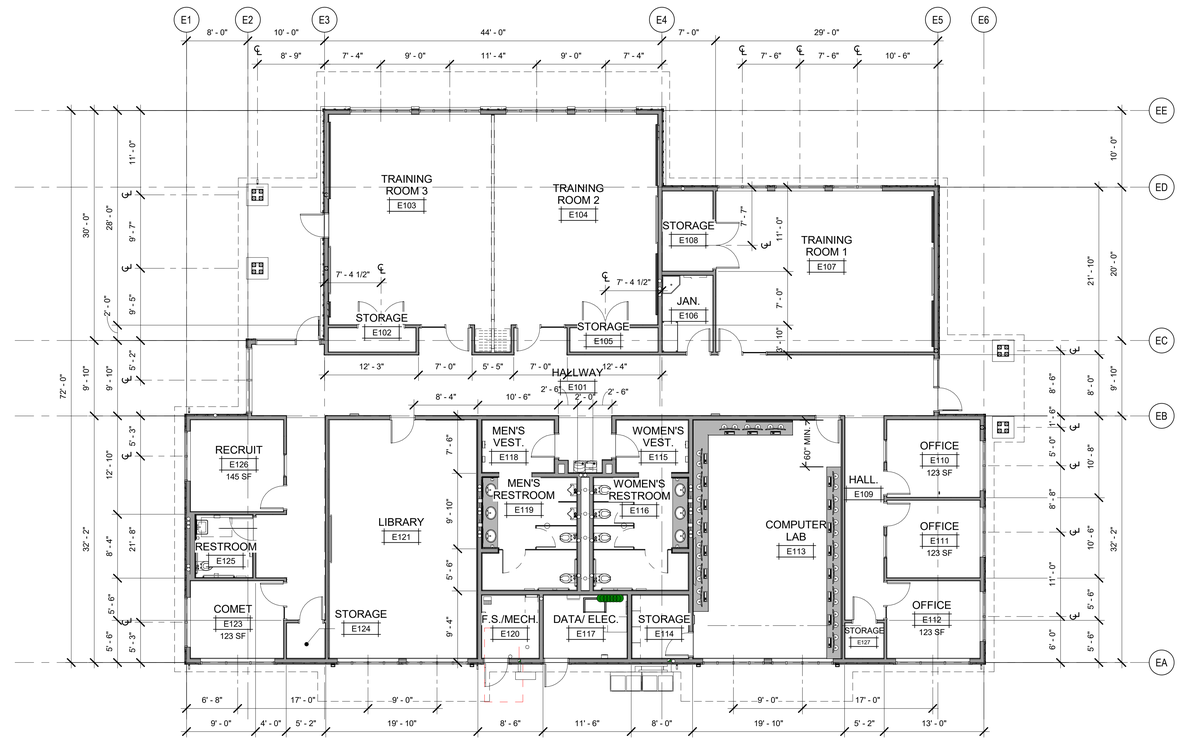

EDUCATION BUILDING DIMENSION PLAN

SCALE: 1/8" = 1'-0"

KEYNOTES

05.518	PIVOTAL SHIPS LADDER - SEE DETAIL 3/A931
10.103	MARKERBOARD - C.F.C.I.
10.119	WHITEBOARD, DRY ERASE W/ TACK BOARD.
10.120	TACK BOARD
10.211	SURFACE MOUNTED TOILET TISSUE DISPENSER
10.213	SURFACE MOUNTED TOILET SEAT COVER DISPENSER
10.237	24"W X 48"H MIRROR
10.247	GRAB BARS, 48" AT SIDE & 42" AT BACK - SEE DETAIL 4/A960
10.259	60" DIAMETER TURNING RADIUS
10.403	SURFACE-MOUNTED FIRE EXTINGUISHER CABINET PER DETAIL 3A/A960
10.406	SEMI-RECESSED FIRE EXTINGUISHER CABINET PER DETAIL 2B/A960
10.500	METAL STORAGE SHELVING UNIT
10.600	OPERABLE FOLDING PARTITION SYSTEM, SEE DETAIL 6/A931
11.552	WALL MOUNTED TELEVISION, C.F.C.I - SEE DETAIL 17/A960
12.511	OFFICE FURNITURE-OFOI
12.513	CLASSROOM FURNITURE - OFOI

GENERAL NOTES

A. FOR WALL ASSEMBLIES REFER TO GENERAL ASSEMBLIES, SHEET G121.
B. UNLESS OTHERWISE INDICATED, INTERIOR STUD FRAMED WALLS SHALL BE TYPE 0-2-6.
C. UNLESS OTHERWISE INDICATED, EXTERIOR STUD FRAMED WALLS SHALL BE TYPE 0-1-6.
D. SEE ENLARGED PLANS FOR WALL TYPES NOT INDICATED ON THIS PLAN.
E. REFER TO DETAIL 4/A961 FOR WALL INTERSECTION PRIORITIES.
F. SEE DOOR SCHEDULE, SHEET A710, FOR ADDITIONAL DOOR INFORMATION AND DIMENSIONS. ALL DOOR RATINGS SHALL MATCH OR EXCEED THE RATING OF THE WALL OR PARTITION IN WHICH THEY ARE INSTALLED.
G. SEE WINDOW SCHEDULE, SHEET A720, FOR ADDITIONAL WINDOW INFORMATION AND DIMENSIONS. ALL WINDOW RATINGS SHALL MATCH OR EXCEED THE RATING OF THE WALL OR PARTITION IN WHICH THEY ARE INSTALLED.
H. REFER TO STRUCTURAL NOTES SHEET S011 AND STRUCTURAL DETAIL SHEET S561 FOR TYPICAL WALL FRAMING DETAILS AND REQUIREMENTS
I. REFER TO SHEET A961 FOR HEAD OF WALL ASSEMBLIES
J. REFER TO FINISH SCHEDULE & INTERIOR ELEVATIONS FOR GYPSUM BOARD TYPE & LOCATIONS
K. ALL DIMENSIONS SHALL TAKE PRECEDENCE OVER SCALE SHOWN ON PLANS, SECTIONS AND DETAILS. DIMENSIONS MISSING FROM THE PLANS, OR NEEDED FOR EXECUTION OF WORK, SHALL BE PROVIDED OR CLARIFIED BY THE ARCHITECT BEFORE THE WORK IS INSTALLED. ERRORS RESULTING IN FAILURE TO COMPLY WITH THIS PROCEDURE SHALL BE CORRECTED BY, AND AT THE SOLE EXPENSE OF, THE CONTRACTOR. DIMENSIONS ARE TO FACE OF STUDS OR SLAB UNLESS NOTED OTHERWISE ON DRAWINGS. DO NOT SCALE DRAWINGS. DIMENSIONS NOTED AS "CLEAR" (CLR) ARE TAKEN TO THE FACE OF FINISH MATERIALS. THE CONTRACTOR SHALL VERIFY DIMENSIONS OF PREFABRICATED AND MANUFACTURED ITEMS AND COORDINATE ROUGH OPENINGS ACCORDINGLY.

1. ALL DIMENSIONS ARE TO FACE OF STUD, CENTERLINE OF COLUMNS, FACE OF CONCRETE
2. FINISH FLOOR DIMENSIONS ARE TO TOP OF CONCRETE OR OTHER HARD SURFACE.
3. CEILING HEIGHT DIMENSIONS ARE TO FINISH SURFACES

FLOOR PLAN LEGEND

- DOOR WITH TAG - SEE SCHEDULE
- WINDOW WITH TAG - SEE SCHEDULE
- COUNTERTOP OVER CASEWORK - DASHED LINE INDICATES WALL MOUNTED CASEWORK ABOVE - SEE INTERIOR ELEVATIONS
- RECESSED FIRE EXTINGUISHER & CABINET
- SINK / LAVATORY - SEE PLUMBING DRAWINGS
- TOILET - SEE PLUMBING DRAWINGS
- URINAL - SEE PLUMBING DRAWINGS
- DRINKING FOUNTAIN - SEE PLUMBING DRAWINGS

WALL TYPES LEGEND

SEE SHEET G121 FOR ASSEMBLY TYPES

EXTERIOR

2 x 6 WOOD STUD WALL - NON RATED	0-W1-6
2 x 12 WOOD STUD WALL - NON RATED	0-W1-12

INTERIOR

2 x 4 WOOD STUD WALL - NON RATED	0-W2-4
2 x 6 WOOD STUD WALL - NON RATED	0-W2-6
2 x 8 WOOD STUD WALL - NON RATED	0-W2-8
2 x 12 WOOD STUD WALL - NON RATED	0-W2-12
2 x 4 WOOD STUD WALL - ACOUSTIC	0-W5-4
2 x 6 WOOD STUD WALL - ACOUSTIC	0-W5-6
2 X 4 WOOD STUD WALL - 1-HR FIRE PARTITION W/ PROTECTED OPENINGS	1-W3-4
2 X 6 WOOD STUD WALL - 1-HR FIRE PARTITION W/ PROTECTED OPENINGS	1-W3-6

WALL TYPE NOTES

PARTITION SYMBOL

- FIRE-RESISTIVE RATING
- ASSEMBLY DETAIL NUMBER
- NOMINAL STUD SIZE

#-#-#
* - #

- # = SPECIAL CONDITIONS
- * = PARTITION HEIGHT

IDENTIFICATION STAMP
DIV. OF THE STATE ARCHITECT
APP: 02-118630 INC:
REVIEWED FOR
SS ☐ FLS ☐ ACS ☑
DATE: 04/13/2021

OFFICE OF THE STATE FIRE MARSHAL
APPROVED FIRE AND PANIC ONLY
Approval of this plan does not authorize or approve any omission or deviation from applicable regulations. Final approval is subject to field inspection. One set of approved plans shall be available on the project site at all times.
PERMIT NO. 20-N:2332-CP
REVIEWED BY: LEO CATAYLO, OSFM
DATE: 4 / /2021

DGS GENERAL SERVICES
Department of General Services
State of California
Real Estate Services Division
Project Management & Development Branch
707 Third Street, Suite 4-105
West Sacramento, California 95605

NICHOLS MELBURG & ROSSETTO ARCHITECTS + ENGINEERS
300 Knollcrest Drive
Redding, CA. 96002
(530) 222-3300 (530) 222-3538 FAX
http://www.nmrdesign.com

Copyright © 2020
All ideas, designs, arrangements and plans indicated or represented by this drawing are owned by, and the property of, NICHOLS, MELBURG and ROSSETTO and were created, evolved and developed for use on, and in conjunction with, the specified project. None of such ideas, designs, arrangements or plans shall be used by, or disclosed to any person, firm or corporation for any purpose whatsoever without the written permission of NICHOLS, MELBURG and ROSSETTO

LICENSE STAMPS

LICENSED ARCHITECT KYLE MATTHEW ROSSETTO C-27504 REN. 10/31/21 STATE OF CALIFORNIA

CONSULTANT

DRAWING STATUS
CONSTRUCTION DOCUMENTS

ISSUE

No.	Date	Description
1	10/20/2020	INITIAL PLAN REVIEW
2	01/22/2021	AGENCY RESUBMITTAL
3	03/22/2021	AGENCY RESUBMITTAL

If drawing is not 30" x 42" it is a reduced print

PROJECT
RESIDENTIAL CENTER, UKIAH: REPLACEMENT OF EXISTING RESIDENTIAL CENTER
440 EAST HILL ROAD
WILLITS, CALIFORNIA 95490
MENDOCINO COUNTY
CALIFORNIA CONSERVATION CORPS

Supervisor	Designed	Drawn
KJM	DMH	MO

DSA Application No.
02-118630

SHEET TITLE
EDUCATION FLOOR PLAN, DIMENSION PLAN & ENLARGED PLANS

DGS Project Number	NMR Project Number
000000000001826	18-6456

Reference North | Sheet Scale: As indicated

Sheet Number: A201E

ISSUE DATE
July 9, 2021

Plot Date: 2/10/2021 6:29:06 AM
File Name: BIM 360://CCC-Willits Residential Center/A_CCC-WRC-ED.rvt

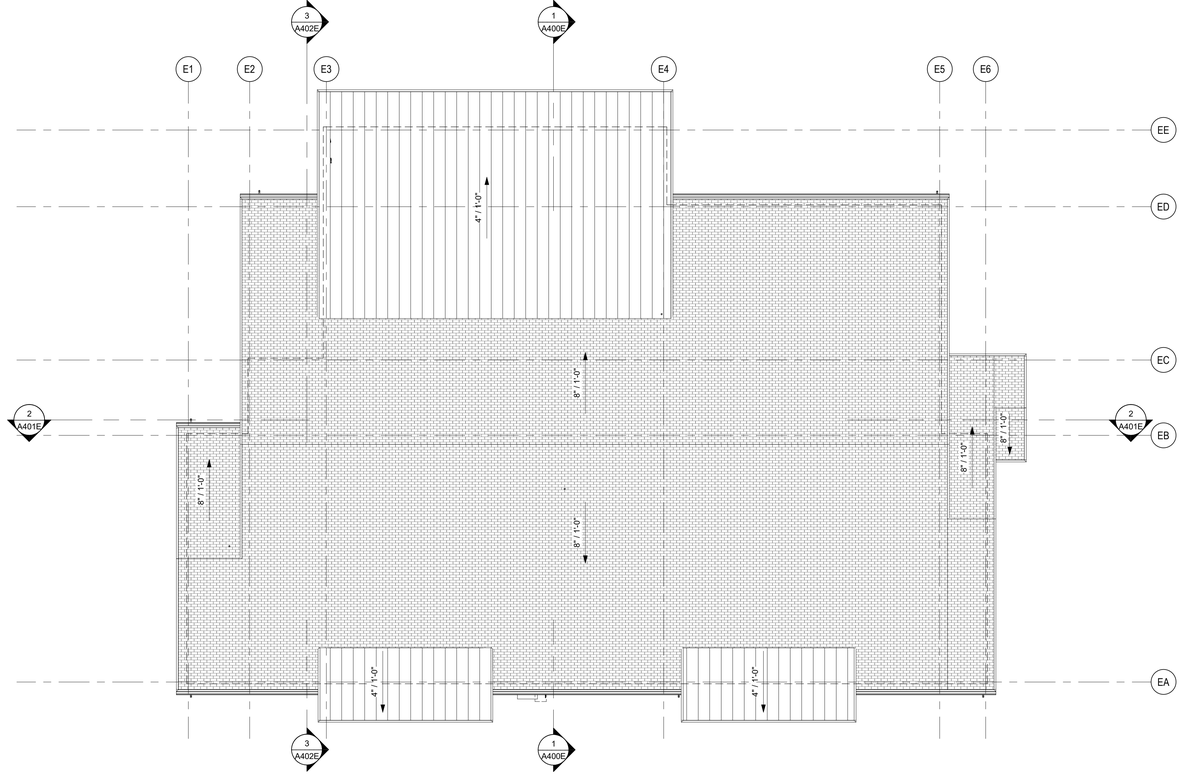

NORTH

EDUCATION BUILDING ROOF PLAN

SCALE: 1/8" = 1'-0"

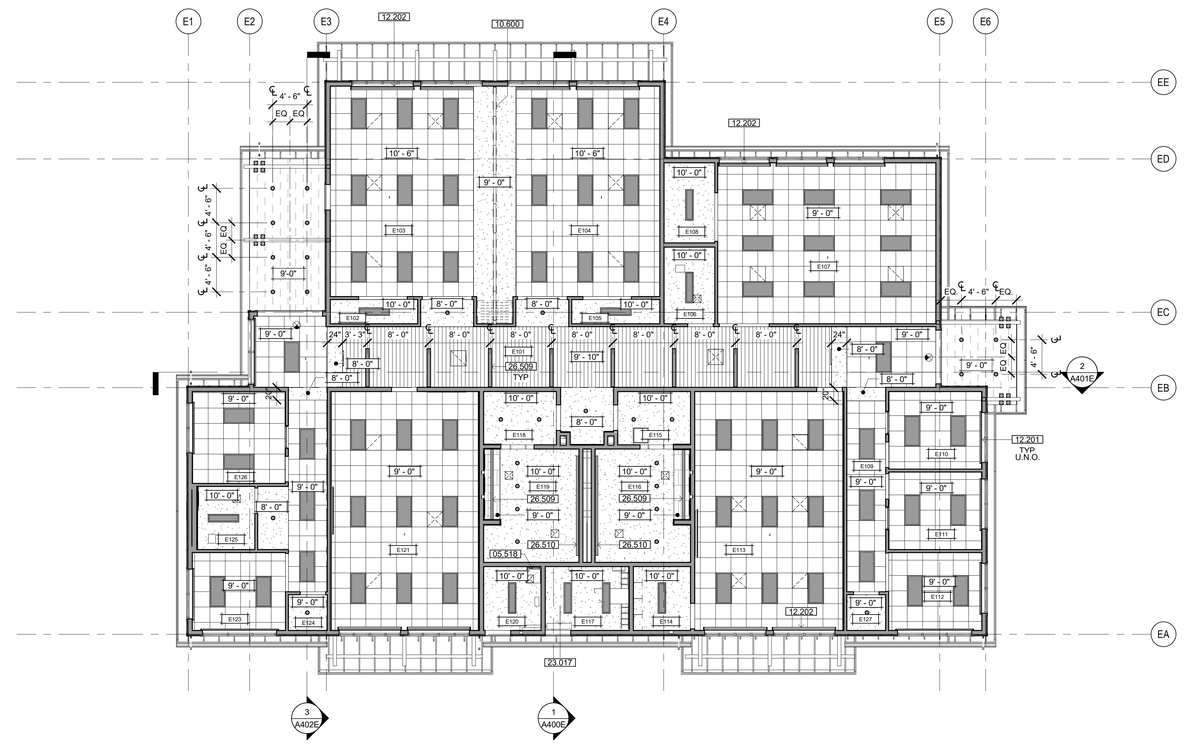

NORTH

EDUCATION BUILDING REFLECTED CEILING PLAN

SCALE: 1/8" = 1'-0"

KEYNOTES

05.518	PIVOTAL SHIPS LADDER - SEE DETAIL 3/A931
10.600	OPERABLE FOLDING PARTITION SYSTEM, SEE DETAIL 6/A931
12.201	SINGLE ROLL WINDOW SHADE, MANUAL. SEE DETAIL 18/A961
12.202	DOUBLE ROLL WINDOW SHADE, MANUAL. SEE DETAIL 20/A961
23.017	WALL MOUNTED MECHANICAL UNIT
26.509	LINEAR LED LIGHT FIXTURE RECESSED INTO CEILING
26.510	WALL MOUNTED UP/DOWN LIGHT FIXTURE

ROOF PLAN NOTES

A. ALL PIPE PENETRATIONS NOT SHOWN. SEE MECHANICAL & PLUMBING DRAWINGS FOR LOCATION INFORMATION, SEE ROOF PIPE PENETRATION DETAIL 5/A810.

B. HVAC CONDENSATE DRAIN PIPES NOT SHOWN. SEE MECHANICAL & PLUMBING DRAWINGS FOR REQUIREMENTS.

ROOF PLAN LEGEND

REFER TO DRAWING G120 FOR TYPICAL ROOF CONSTRUCTION ASSEMBLIES

- ASPHALT SHINGLE ROOFING - SEE SHEET A810
- PREFINISHED METAL ROOFING - SEE SHEET A810
- ROOF DRAIN & OVERFLOW

GENERAL RCP NOTES

A. MAINTAIN CEILING HEIGHTS AND LIGHTING LAYOUT PATTERNS SHOWN, UNLESS OTHERWISE APPROVED BY ARCHITECT. CONFLICTS CAUSED BY DUCTWORK, SPRINKLER PIPING, CONDUIT, AND/OR OTHER ITEMS OR FEATURES OF CONSTRUCTION SHALL NOT CONSTITUTE CAUSE FOR VARIANCE FROM CEILING HEIGHTS AND/OR LIGHTING LAYOUTS INDICATED IN THESE DRAWINGS. COORDINATE ALL WORK TO ACHIEVE HEIGHTS AND LAYOUTS AS INDICATED IN THESE DRAWINGS.

B. REFER TO MECHANICAL, FIRE PROTECTION, ELECTRICAL, SECURITY, AND AUDIOVISUAL DRAWINGS FOR ADDITIONAL CONSTRUCTION FEATURES, SYSTEMS, FIXTURES, AND EQPT. LOCATED IN, ON, AND ABOVE CEILINGS. TO THE EXTENT THAT THESE ITEMS ARE SHOWN ON REFLECTED CEILING PLANS, THEY ARE FOR GENERAL INFORMATION AND LAYOUT PURPOSES ONLY, AND DO NOT NECESSARILY REPRESENT ACTUAL SCOPE OR QUANTITIES REQUIRED FOR THE PROJECT. ALL QUANTITIES TO BE VERIFIED.

C. AT ACOUSTICAL TILE CEILINGS, ALL FIXTURES AND EQUIPMENT SHALL BE CENTERED WITHIN ACOUSTICAL CEILING TILES, IN BOTH DIRECTIONS.

D. SPRINKLER HEAD LOCATIONS SHALL RESULT IN A UNIFORM AND REPETITIVE PATTERN FOR EACH AREA, AND SHALL BE LOCATED SYMMETRICALLY WITH RESPECT TO WALLS, CEILING GRID PATTERNS, AND LIGHT FIXTURES. SPRINKLER HEADS IN ACOUSTICAL TILE CEILINGS SHALL BE LOCATED IN THE CENTERS OF THE CEILING TILES.

RCP LEGEND

REFER TO DRAWING G120 FOR TYPICAL CEILING CONSTRUCTION ASSEMBLIES

- 2' x 2' SUSPENDED ACOUSTICAL TILE CEILING SYSTEM — C / 3
- 5/8" GYPSUM BOARD CEILING — C / 2
- SUSPENDED WOOD CEILING — C / 4
- EXTERIOR FIBER CEMENT SOFFIT, NON-VENTED
- +X'-X" — INDICATES HEIGHT OF FINISHED CEILING OR SOFFIT (FROM REFERENCE FLOOR ELEVATION)
- 2'x4' LAY-IN LIGHT FIXTURE - SEE ELECTRICAL DRAWINGS
- SUSPENDED LIGHT FIXTURE - SEE ELECTRICAL DRAWINGS
- 1'x4' SURFACE MOUNTED LIGHT FIXTURE - SEE ELECTRICAL DRAWINGS
- 6" DIAMETER RECESSED CAN LIGHT FIXTURE - SEE ELECTRICAL DRAWINGS
- LINEAR LIGHT FIXTURE - SEE ELECTRICAL DRAWINGS
- DIAMETER PENDANT LIGHT FIXTURE - SEE ELECTRICAL DRAWINGS
- SUPPLY AIR DIFFUSERS - SEE MECHANICAL DRAWINGS
- RETURN AIR DIFFUSER - SEE MECHANICAL DRAWINGS
- EXHAUST - SEE MECHANICAL DRAWINGS

IDENTIFICATION STAMP
DIV. OF THE STATE ARCHITECT
APP: 02-118630 INC:
REVIEWED FOR
SS ☐ FLS ☐ ACS ☑
DATE: 04/13/2021

OFFICE OF THE STATE FIRE MARSHAL
APPROVED FIRE AND PANIC ONLY
Approval of this plan does not authorize or approve any omission or deviation from applicable regulations. Final approval is subject to field inspection. One set of approved plans shall be available on the project site at all times.
PERMIT NO. 20N-2332-CP
REVIEWED BY: LEO CATAYLO, OSFM
DATE: 4 / /2021

GENERAL SERVICES
Department of General Services
State of California
Real Estate Services Division
Project Management & Development Branch
707 Third Street, Suite 4-105
West Sacramento, California 95605

NICHOLS MELBURG & ROSSETTO
ARCHITECTS + ENGINEERS
300 Knollcrest Drive
Redding, CA. 96002
(530) 222-3300 (530) 222-3538 FAX
http://www.nmrdesign.com

Copyright © 2020
All ideas, designs, arrangements and plans indicated or represented by this drawing are owned by, and the property of, NICHOLS, MELBURG and ROSSETTO and were created, evolved and developed for use on, and in conjunction with, the specified project. None of such ideas, designs, arrangements or plans shall be used by, or disclosed to any person, firm or corporation for any purpose whatsoever without the written permission of NICHOLS, MELBURG and ROSSETTO

LICENSE STAMPS

LICENSED ARCHITECT — KYLE MATTHEW — C-23504 — REN. 10/31/21 — STATE OF CALIFORNIA

CONSULTANT

DRAWING STATUS
CONSTRUCTION DOCUMENTS

ISSUE

No.	Date	Description
1	10/20/2020	INITIAL PLAN REVIEW
2	01/22/2021	AGENCY RESUBMITTAL
3	03/22/2021	AGENCY RESUBMITTAL

If drawing is not 30" x 42" it is a reduced print

PROJECT
RESIDENTIAL CENTER, UKIAH: REPLACEMENT OF EXISTING RESIDENTIAL CENTER
440 EAST HILL ROAD
WILLITS, CALIFORNIA 95490
MENDOCINO COUNTY
CALIFORNIA CONSERVATION CORPS

Supervisor	Designed	Drawn
KJM	DMH	MO

DSA Application No.
02-118630

SHEET TITLE
EDUCATION ROOF PLAN & REFLECTED CEILING PLAN

DGS Project Number	NMR Project Number
000000000001826	18-6456

Reference North — NORTH
Sheet Scale: As indicated
Sheet Number: A211E

ISSUE DATE
July 9, 2021

Plot Date: 3/19/2021 8:29:16 AM
File Name: BIM 360:\CCC Willits Residential Center\A_CCC-WRC-ED.rvt

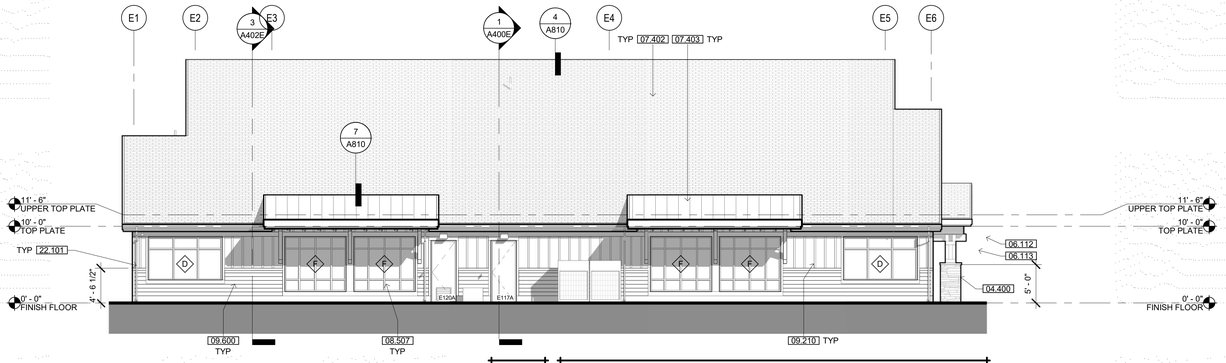

1 SOUTH ELEVATION

SCALE: 1/8" = 1'-0"

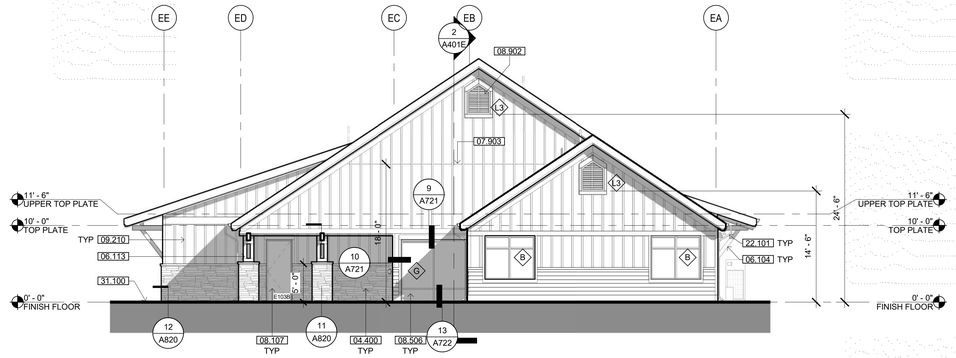

2 WEST ELEVATION

SCALE: 1/8" = 1'-0"

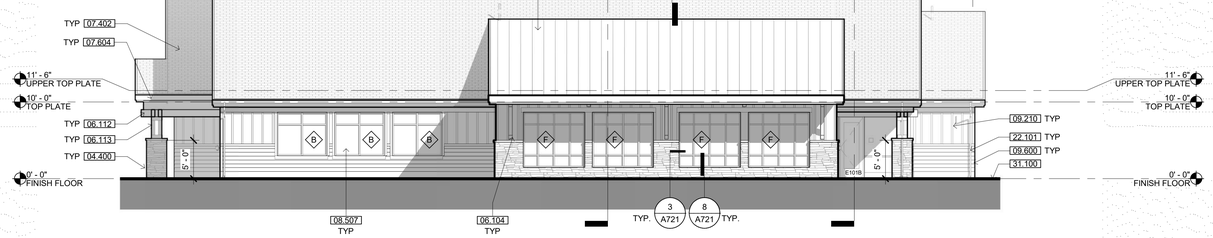

3 NORTH ELEVATION

SCALE: 1/8" = 1'-0"

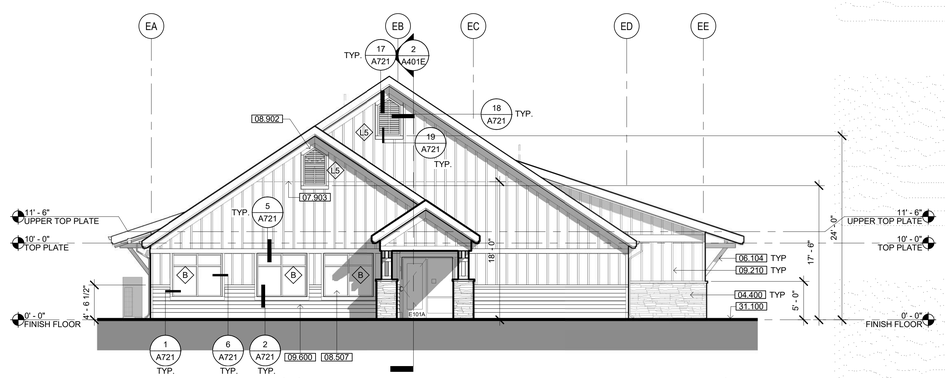

4 EAST ELEVATION

SCALE: 1/8" = 1'-0"

KEYNOTES

04.400	ADHERED STONE VENEER WAINSCOT
06.104	HEAVY TIMBER KNEE BRACE, PAINTED
06.112	HEAVY TIMBER BEAM, PAINTED
06.113	HEAVY TIMBER COLUMN, PAINTED
07.402	COMPOSITION SHINGLE ROOFING
07.403	STANDING SEAM METAL ROOF SYSTEM, FACTORY PRE-FINISHED
07.604	FASCIA & TRIM, PAINTED
07.903	BOARD & BATTEN SIDING JOINT FLASHING, SEE DETAIL 16/A800
08.107	INSULATED METAL DOOR IN HOLLOW METAL FRAME, PAINTED
08.506	HOLLOW METAL WINDOW FRAME W/ DUAL GLAZING, PAINT FRAME
08.507	DUAL-GLAZED VINYL WINDOWS
08.902	METAL LOUVER
09.210	FIBER CEMENT BATTENS O/ FIBER CEMENT SIDING PANELS O/ RIGID INSULATION
09.600	BASE-SEE FINISH SCHEDULE
22.101	RAINWATER LEADER-SEE DETAILS 5 & 9/A820
31.100	APPROXIMATE FINISH GRADE

EXTERIOR ELEV. LEGEND

B##X — DOOR TAG - SEE SCHEDULE, SHEET A710

X — WINDOW TAG - SEE SCHEDULE, SHEET A720

IDENTIFICATION STAMP
DIV. OF THE STATE ARCHITECT
APP: 02-118630 INC:
REVIEWED FOR
SS ☐ FLS ☐ ACS ☑
DATE: 04/13/2021

OFFICE OF THE STATE FIRE MARSHAL
APPROVED FIRE AND PANIC ONLY
Approval of this plan does not authorize or approve any omission or deviation from applicable regulations. Final approval is subject to field inspection. One set of approved plans shall be available on the project site at all times.
PERMIT NO. 20-N-2332-CP
REVIEWED BY: LEO CATAYLO, OSFM
DATE: 4 / /2021

DGS GENERAL SERVICES
Department of General Services
State of California
Real Estate Services Division
Project Management & Development Branch
707 Third Street, Suite 4-105
West Sacramento, California 95605

NICHOLS MELBURG & ROSSETTO ARCHITECTS + ENGINEERS
300 Knollcrest Drive
Redding, CA. 96002
(530) 222-3300 (530) 222-3538 FAX
http://www.nmrdesign.com

Copyright © 2020
All ideas, designs, arrangements and plans indicated or represented by this drawing are owned by, and the property of, NICHOLS, MELBURG and ROSSETTO and were created, evolved and developed for use on, and in conjunction with, the specified project. None of such ideas, designs, arrangements or plans shall be used by, or disclosed to any person, firm or corporation for any purpose whatsoever without the written permission of NICHOLS, MELBURG and ROSSETTO

LICENSE STAMPS

LICENSED ARCHITECT KYLE MATTHEW MELBURG C-31504 REN. 10/31/21 STATE OF CALIFORNIA

CONSULTANT

DRAWING STATUS
CONSTRUCTION DOCUMENTS

ISSUE

No.	Date	Description
1	10/20/2020	INITIAL PLAN REVIEW
2	01/22/2021	AGENCY RESUBMITTAL
3	03/22/2021	AGENCY RESUBMITTAL

If drawing is not 30" x 42" it is a reduced print

PROJECT
RESIDENTIAL CENTER, UKIAH: REPLACEMENT OF EXISTING RESIDENTIAL CENTER
440 EAST HILL ROAD
WILLITS, CALIFORNIA 95490
MENDOCINO COUNTY
CALIFORNIA CONSERVATION CORPS

Supervisor	Designed	Drawn
KJM	DMH	MO

DSA Application No.
02-118630

SHEET TITLE
EDUCATION EXTERIOR ELEVATIONS

DGS Project Number	NMR Project Number
00000000001826	18-6456

Reference North — Sheet Scale: 1/8" = 1'-0"

Sheet Number: A300E

ISSUE DATE
July 9, 2021

Plot Date: 3/19/2021 8:59:06 AM
File Name: BIM 360://CCC-Willits Residential Center/A_CCC-WRC-ED.rvt

KEYNOTES

03.302	CONCRETE SLAB, SEE STRUCTURAL DRAWINGS
03.303	CONCRETE FOOTING, SEE STRUCTURAL DRAWINGS
06.104	HEAVY TIMBER KNEE BRACE, PAINTED
06.109	WOOD FRAMED TRUSS
08.103	HOLLOW METAL DOOR & FRAME-SEE DOOR SCHEDULE
08.107	INSULATED METAL DOOR IN HOLLOW METAL FRAME, PAINTED
08.507	DUAL-GLAZED VINYL WINDOWS
09.220	GYPSUM BOARD SOFFIT
09.304	TILE WAINSCOT-SEE FINISH SCHEDULE
09.504	SUSPENDED WOOD CEILING
09.600	BASE-SEE FINISH SCHEDULE
09.805	ACOUSTIC BATT INSULATION
10.247	GRAB BARS, 48" AT SIDE & 42" AT BACK - SEE DETAIL 4/A960
11.552	WALL MOUNTED TELEVISION, C.F.C.I - SEE DETAIL 17/A960
12.202	DOUBLE ROLL WINDOW SHADE, MANUAL. SEE DETAIL 20/A961
22.401	URINAL - SEE PLUMBING DRAWINGS
22.406	ACCESSIBLE URINAL - SEE PLUMBING DRAWINGS
22.412	ACCESSIBLE WALL HUNG TOILET
31.100	APPROXIMATE FINISH GRADE

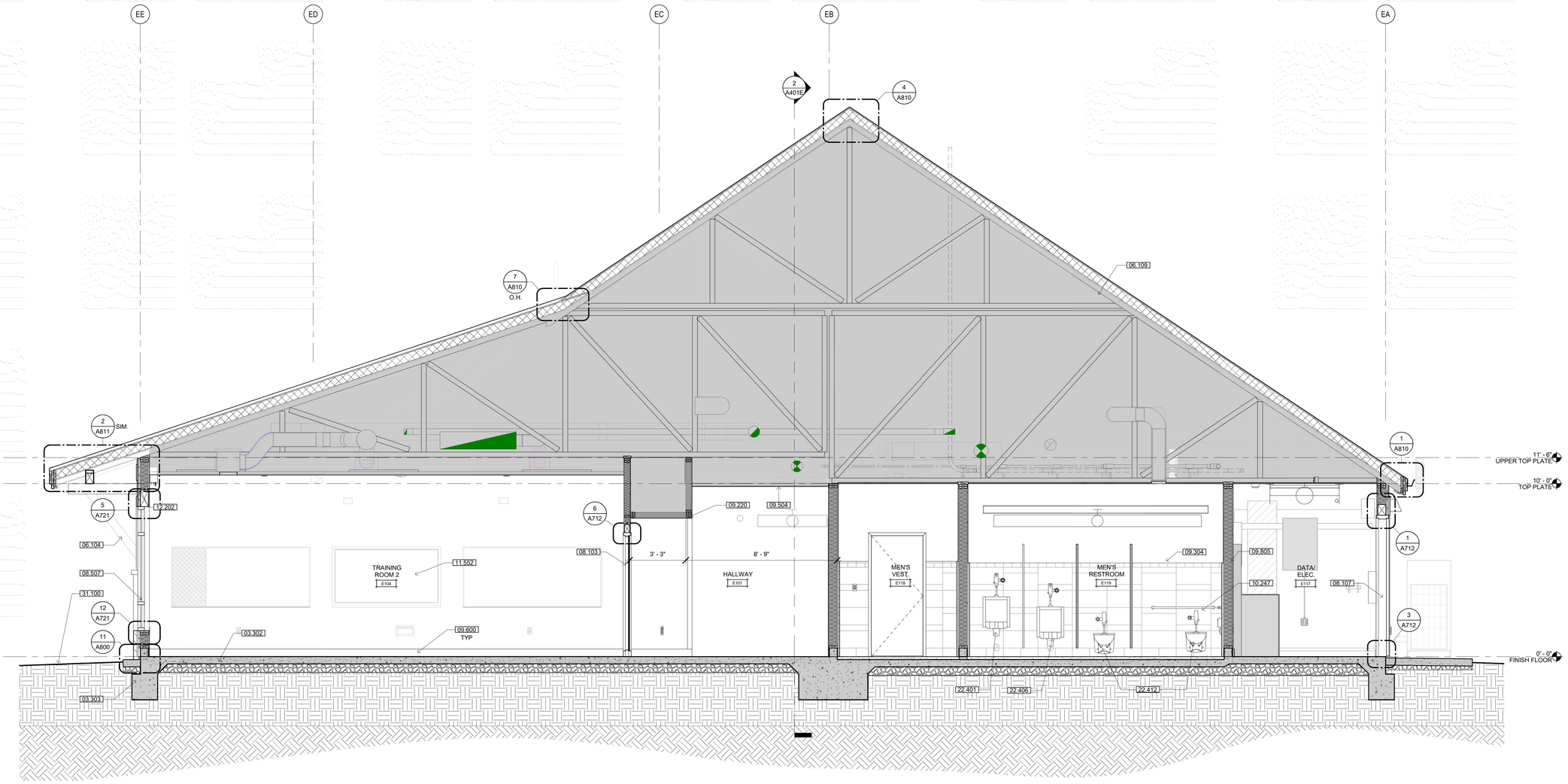

1 BUILDING SECTION

SCALE: 3/8" = 1'-0"

IDENTIFICATION STAMP
DIV. OF THE STATE ARCHITECT
APP: 02-118630 INC:
REVIEWED FOR
SS ☐ FLS ☐ ACS ☑
DATE: 04/13/2021

OFFICE OF THE STATE FIRE MARSHAL
APPROVED FIRE AND PANIC ONLY
Approval of this plan does not authorize or approve any omission or deviation from applicable regulations. Final approval is subject to field inspection. One set of approved plans shall be available on the project site at all times.
PERMIT NO. 20-N-2332-CP
REVIEWED BY: LEO CATAYLO, OSFM
DATE: 4 / /2021

GENERAL SERVICES
Department of General Services
State of California
Real Estate Services Division
Project Management & Development Branch
707 Third Street, Suite 4-105
West Sacramento, California 95605

NICHOLS MELBURG & ROSSETTO
ARCHITECTS + ENGINEERS
300 Knollcrest Drive
Redding, CA. 96002
(530) 222-3300 (530) 222-3538 FAX
http://www.nmrdesign.com

Copyright © 2020
All ideas, designs, arrangements and plans indicated or represented by this drawing are owned by, and the property of, NICHOLS, MELBURG and ROSSETTO and were created, evolved and developed for use on, and in conjunction with, the specified project. None of such ideas, designs, arrangements or plans shall be used by, or disclosed to any person, firm or corporation for any purpose whatsoever without the written permission of NICHOLS, MELBURG and ROSSETTO.

LICENSE STAMPS

LICENSED ARCHITECT KYLE MATTY C-32504 REN. 10/31/21 STATE OF CALIFORNIA

CONSULTANT

DRAWING STATUS
CONSTRUCTION DOCUMENTS

ISSUE

No.	Date	Description
1	10/20/2020	INITIAL PLAN REVIEW
2	01/22/2021	AGENCY RESUBMITTAL
3	03/22/2021	AGENCY RESUBMITTAL

If drawing is not 30" x 42" it is a reduced print

PROJECT
RESIDENTIAL CENTER, UKIAH: REPLACEMENT OF EXISTING RESIDENTIAL CENTER
440 EAST HILL ROAD
WILLITS, CALIFORNIA 95490
MENDOCINO COUNTY
CALIFORNIA CONSERVATION CORPS

Supervisor	Designed	Drawn
KJM	DMH	MO

DSA Application No.
02-118630

SHEET TITLE
EDUCATION BUILDING SECTION

DGS Project Number: 000000000001826
NMR Project Number: 18-6456

Reference North
Sheet Scale: 3/8" = 1'-0"
Sheet Number: A400E

ISSUE DATE
July 9, 2021

Plot Date: 5/19/2021 8:31:10 AM
File Name: BIM 360://CCC-Willits Residential Center/A_CCC-WRC-ED.rvt

KEYNOTES

03.302	CONCRETE SLAB, SEE STRUCTURAL DRAWINGS
03.303	CONCRETE FOOTING, SEE STRUCTURAL DRAWINGS
04.400	ADHERED STONE VENEER WAINSCOT
06.109	WOOD FRAMED TRUSS
06.113	HEAVY TIMBER COLUMN, PAINTED
07.402	COMPOSITION SHINGLE ROOFING
09.210	FIBER CEMENT BATTENS O/ FIBER CEMENT SIDING PANELS O/ RIGID INSULATION
09.220	GYPSUM BOARD SOFFIT
09.222	FIBER CEMENT LAP SIDING SYSTEM O/ RIGID INSULATION
10.207	CORNER GUARD - SEE FINISH SCHEDULE
22.411	ACCESSIBLE DRINKING FOUNTAIN WITH BOTTLE FILL
31.100	APPROXIMATE FINISH GRADE

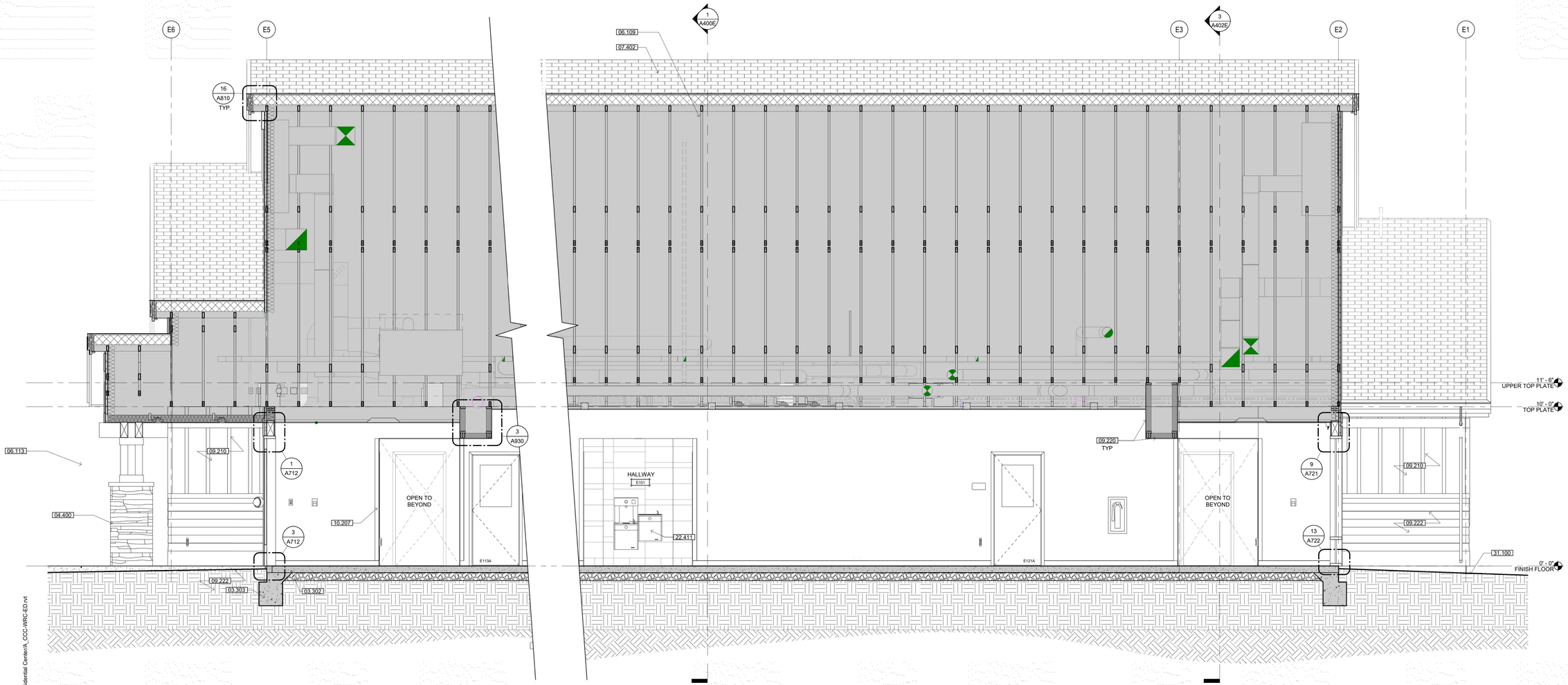

2 BUILDING SECTION

SCALE: 3/8" = 1'-0"

IDENTIFICATION STAMP
DIV. OF THE STATE ARCHITECT
APP: 02-118630 INC:
REVIEWED FOR
SS ☐ FLS ☐ ACS ☑
DATE: 04/13/2021

OFFICE OF THE STATE FIRE MARSHAL
APPROVED FIRE AND PANIC ONLY
Approval of this plan does not authorize or approve any omission or deviation from applicable regulations. Final approval is subject to field inspection. One set of approved plans shall be available on the project site at all times.
PERMIT NO. 20-N-2332-CP
REVIEWED BY: LEO CATAYLO, OSFM
DATE: 4 / /2021

GENERAL SERVICES
Department of General Services
State of California
Real Estate Services Division
Project Management & Development Branch
707 Third Street, Suite 4-105
West Sacramento, California 95605

NICHOLS MELBURG & ROSSETTO
ARCHITECTS + ENGINEERS
300 Knollcrest Drive
Redding, CA. 96002
(530) 222-3300 (530) 222-3538 FAX
http://www.nmrdesign.com

Copyright © 2020
All ideas, designs, arrangements and plans indicated or represented by this drawing are owned by, and the property of, NICHOLS, MELBURG and ROSSETTO and were created, evolved and developed for use on, and in conjunction with, the specified project. None of such ideas, designs, arrangements or plans shall be used by, or disclosed to any person, firm or corporation for any purpose whatsoever without the written permission of NICHOLS, MELBURG and ROSSETTO

LICENSE STAMPS

LICENSED ARCHITECT KYLE MATTHEW MELBURG C-27504 REN. 10/31/21 STATE OF CALIFORNIA

CONSULTANT

DRAWING STATUS
CONSTRUCTION DOCUMENTS

ISSUE

No.	Date	Description
1	10/20/2020	INITIAL PLAN REVIEW
2	01/22/2021	AGENCY RESUBMITTAL
3	03/22/2021	AGENCY RESUBMITTAL

If drawing is not 30" x 42" it is a reduced print

PROJECT
RESIDENTIAL CENTER, UKIAH: REPLACEMENT OF EXISTING RESIDENTIAL CENTER
440 EAST HILL ROAD
WILLITS, CALIFORNIA 95490
MENDOCINO COUNTY
CALIFORNIA CONSERVATION CORPS

Supervisor	Designed	Drawn
KJM	DMH	MO

DSA Application No.
02-118630

SHEET TITLE
EDUCATION BUILDING SECTION

DGS Project Number: 00000000001826
NMR Project Number: 18-6456

Reference North: NORTH
Sheet Scale: 3/8" = 1'-0"
Sheet Number: A401E

ISSUE DATE
July 9, 2021

Plot Date: 2/10/2021 8:31:56 AM
File Name: BIM 360://CCC-Willits Residential Center/A_CCC-WRC-ED.rvt

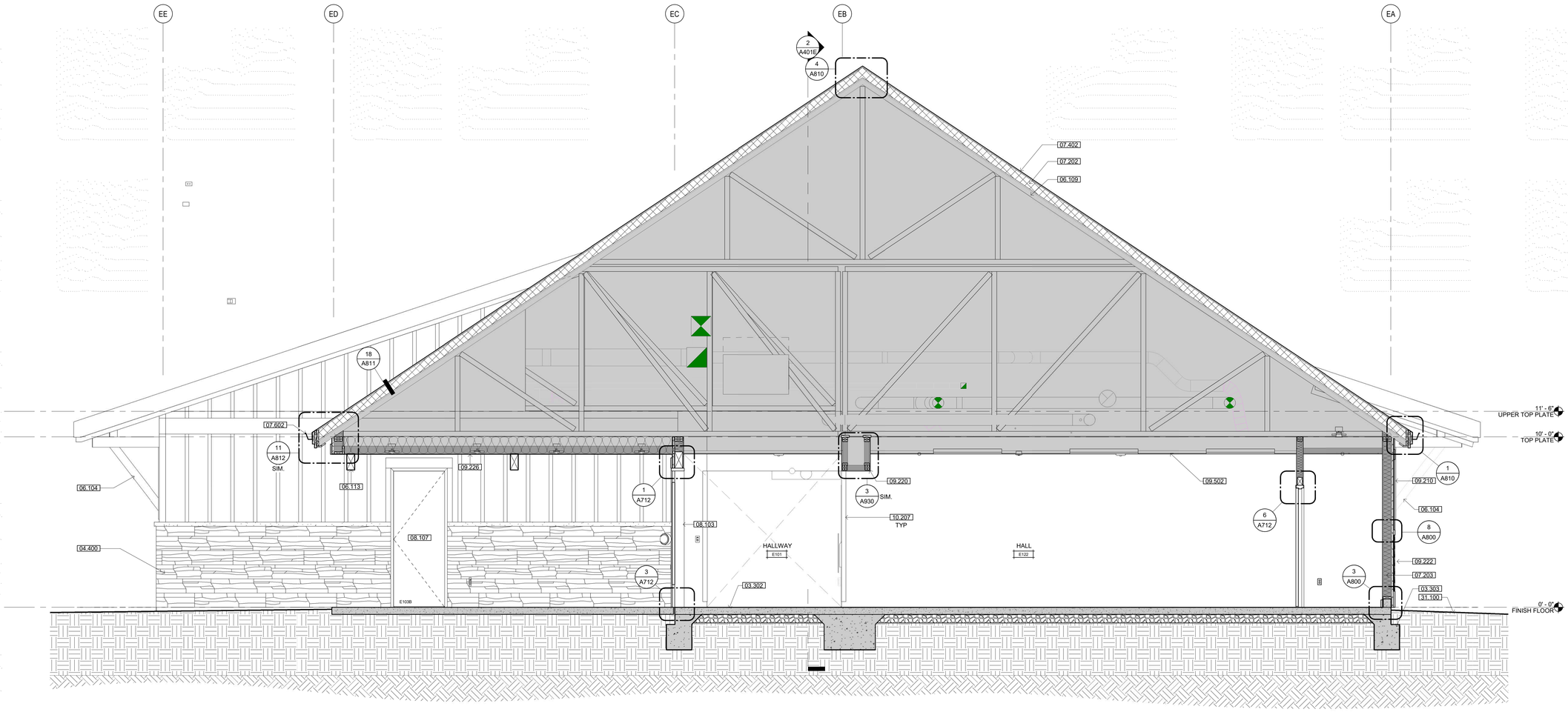

KEYNOTES

03.302	CONCRETE SLAB, SEE STRUCTURAL DRAWINGS
03.303	CONCRETE FOOTING, SEE STRUCTURAL DRAWINGS
04.400	ADHERED STONE VENEER WAINSCOT
06.104	HEAVY TIMBER KNEE BRACE, PAINTED
06.109	WOOD FRAMED TRUSS
06.113	HEAVY TIMBER COLUMN, PAINTED
07.202	RIGID INSULATION
07.203	BATT INSULATION
07.402	COMPOSITION SHINGLE ROOFING
07.602	PRE-FINISHED METAL GUTTER
08.103	HOLLOW METAL DOOR & FRAME-SEE DOOR SCHEDULE
08.107	INSULATED METAL DOOR IN HOLLOW METAL FRAME, PAINTED
09.210	FIBER CEMENT BATTENS O/ FIBER CEMENT SIDING PANELS O/ RIGID INSULATION
09.220	GYPSUM BOARD SOFFIT
09.222	FIBER CEMENT LAP SIDING SYSTEM O/ RIGID INSULATION
09.226	FIBER CEMENT SOFFIT PANELING
09.502	SUSPENDED ACOUSTICAL CEILING SYSTEM
10.207	CORNER GUARD - SEE FINISH SCHEDULE
31.100	APPROXIMATE FINISH GRADE

3 BUILDING SECTION

SCALE: 3/8" = 1'-0"

IDENTIFICATION STAMP
DIV. OF THE STATE ARCHITECT
APP: 02-118630 INC:
REVIEWED FOR
SS ☐ FLS ☐ ACS ☑
DATE: 04/13/2021

OFFICE OF THE STATE FIRE MARSHAL
APPROVED FIRE AND PANIC ONLY
Approval of this plan does not authorize or approve any omission or deviation from applicable regulations. Final approval is subject to field inspection. One set of approved plans shall be available on the project site at all times.
PERMIT NO. 20-N-2332-CP
REVIEWED BY: LEO CATAYLO, OSFM
DATE: 4 / /2021

GENERAL SERVICES
Department of General Services
State of California
Real Estate Services Division
Project Management & Development Branch
707 Third Street, Suite 4-105
West Sacramento, California 95605

NICHOLS MELBURG & ROSSETTO
ARCHITECTS + ENGINEERS
300 Knollcrest Drive
Redding, CA. 96002
(530) 222-3300 (530) 222-3538 FAX
http://www.nmrdesign.com

Copyright © 2020
All ideas, designs, arrangements and plans indicated or represented by this drawing are owned by, and the property of, NICHOLS, MELBURG and ROSSETTO and were created, evolved and developed for use on, and in conjunction with, the specified project. None of such ideas, designs, arrangements or plans shall be used by, or disclosed to any person, firm or corporation for any purpose whatsoever without the written permission of NICHOLS, MELBURG and ROSSETTO

LICENSE STAMPS

LICENSED ARCHITECT
KYLE MATTHEW MELBURG
C-21504
REN. 10/31/21
STATE OF CALIFORNIA

CONSULTANT

DRAWING STATUS
CONSTRUCTION DOCUMENTS

ISSUE

No.	Date	Description
1	10/20/2020	INITIAL PLAN REVIEW
2	01/22/2021	AGENCY RESUBMITTAL
3	03/22/2021	AGENCY RESUBMITTAL

If drawing is not 30" x 42" it is a reduced print

PROJECT
RESIDENTIAL CENTER, UKIAH: REPLACEMENT OF EXISTING RESIDENTIAL CENTER
440 EAST HILL ROAD
WILLITS, CALIFORNIA 95490
MENDOCINO COUNTY
CALIFORNIA CONSERVATION CORPS

Supervisor	Designed	Drawn
KJM	DMH	MO

DSA Application No.
02-118630

SHEET TITLE
EDUCATION BUILIDING SECTION

DGS Project Number: 00000000001826
NMR Project Number: 18-6456

Reference North
Sheet Scale: 3/8" = 1'-0"
Sheet Number: A402E

ISSUE DATE
July 9, 2021

Plot Date: 2/10/2021 8:32:10 AM
File Name: BIM 360://CCC-Willits Residential Center/A_CCC-WRC-ED.rvt

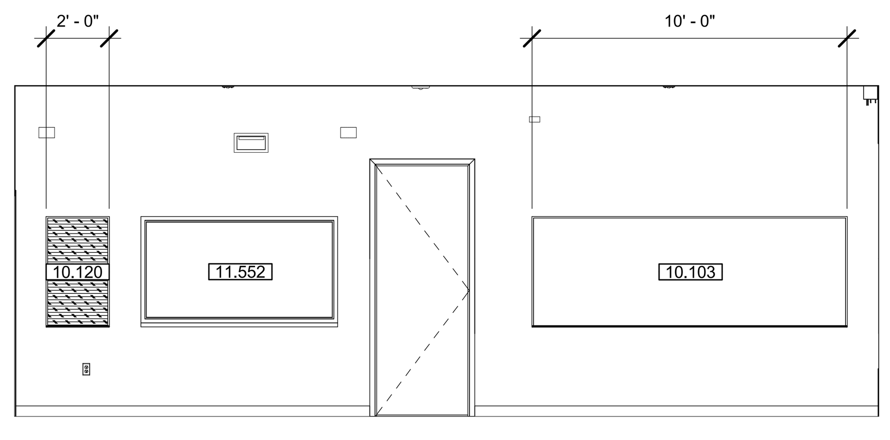

① E103 - TRAINING ROOM 3 - WEST
1/4" = 1'-0"

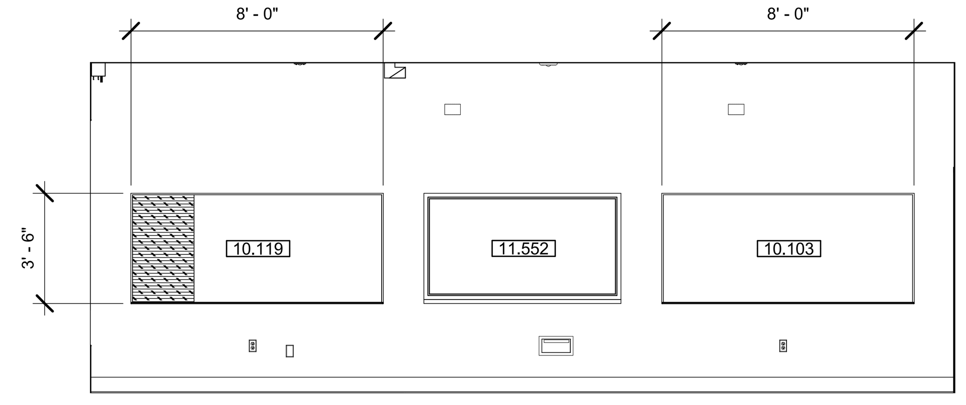

② E104 - TRAINING ROOM 2 - EAST
1/4" = 1'-0"

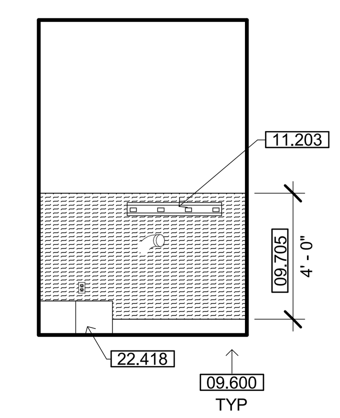

③ E106 - JANITOR'S CLOSET - NORTH
1/4" = 1'-0"

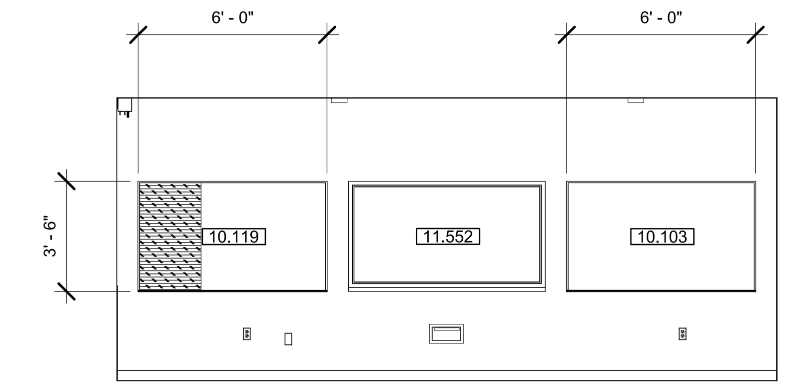

④ E107 - TRAINING ROOM 1 - EAST
1/4" = 1'-0"

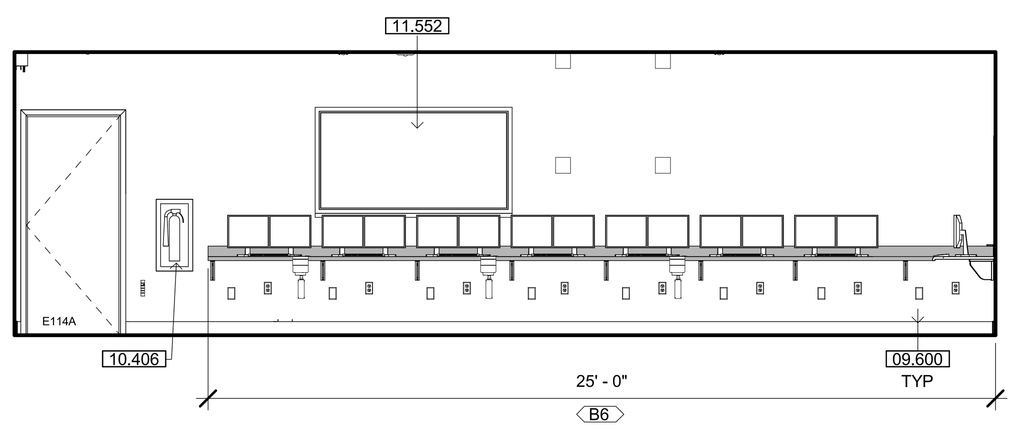

⑤ E113 - COMPUTER LAB - WEST
1/4" = 1'-0"

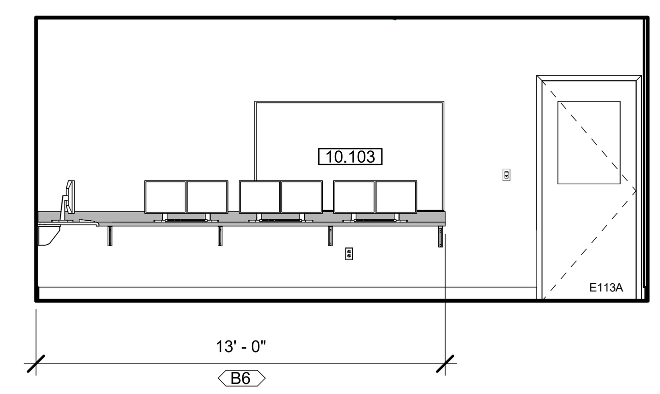

⑥ E113 - COMPUTER LAB - NORTH
1/4" = 1'-0"

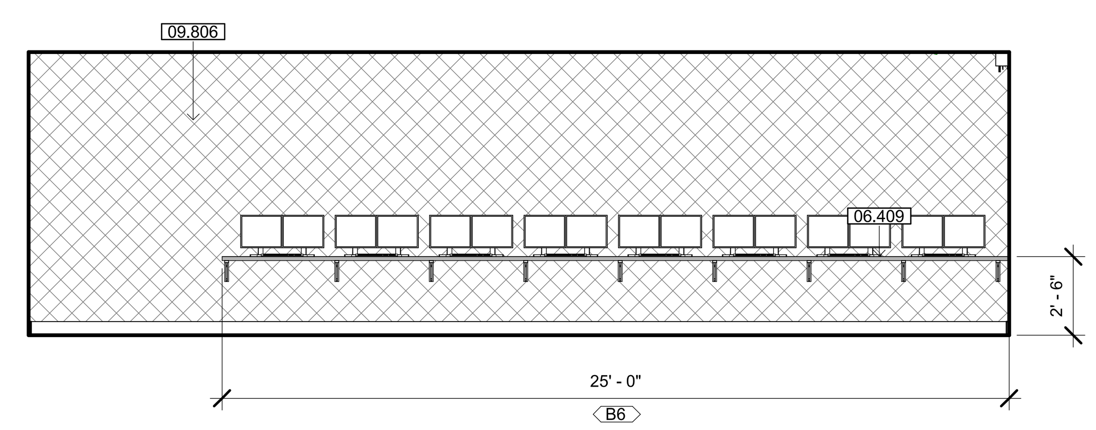

⑦ E113 - COMPUTER LAB - EAST
1/4" = 1'-0"

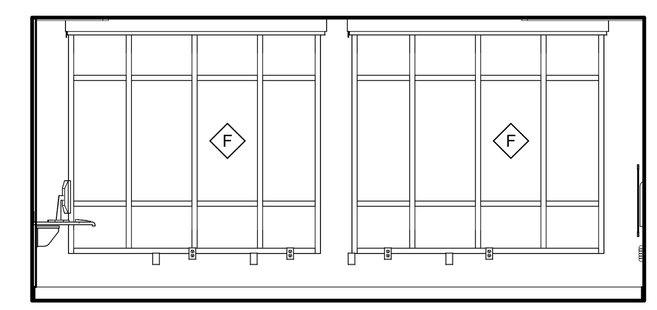

⑧ E113 - COMPUTER LAB - SOUTH
1/4" = 1'-0"

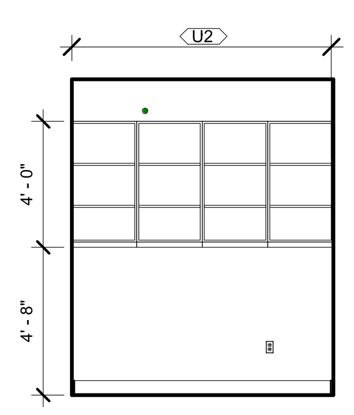

⑨ E114 - STORAGE - WEST
1/4" = 1'-0"

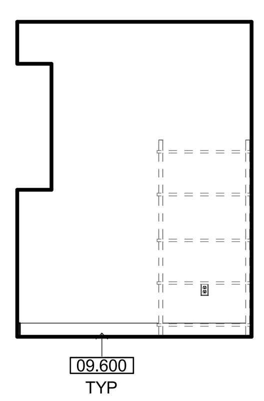

⑩ E114 - STORAGE - NORTH
1/4" = 1'-0"

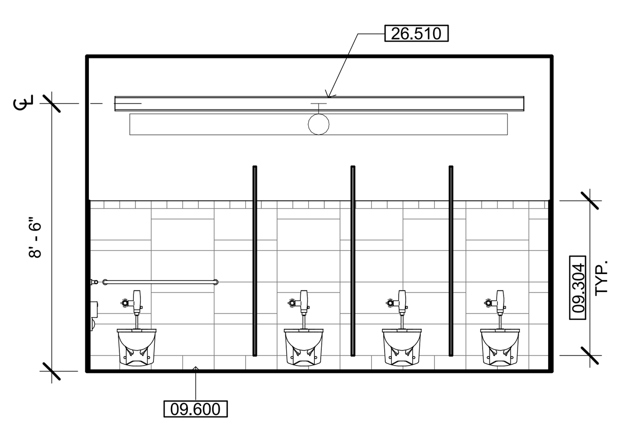

⑪ E116 WOMEN'S RESTROOM - WEST
1/4" = 1'-0"

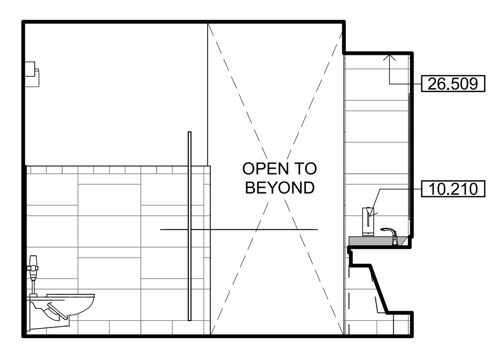

⑫ E116 WOMEN'S RESTROOM - NORTH
1/4" = 1'-0"

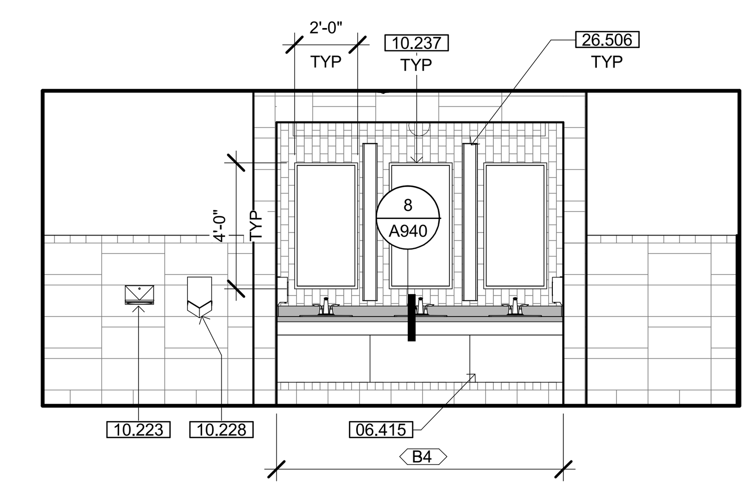

⑬ E116 WOMEN'S RESTROOM - EAST
1/4" = 1'-0"

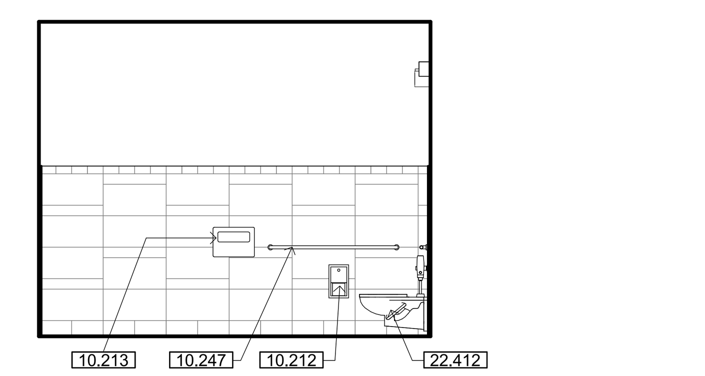

⑭ E116 WOMEN'S RESTROOM - SOUTH
1/4" = 1'-0"

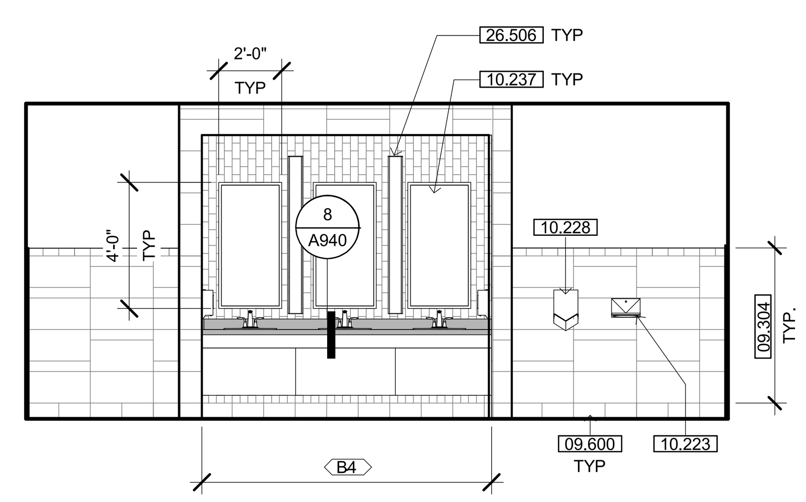

⑮ E119 MEN'S RESTROOM - WEST
1/4" = 1'-0"

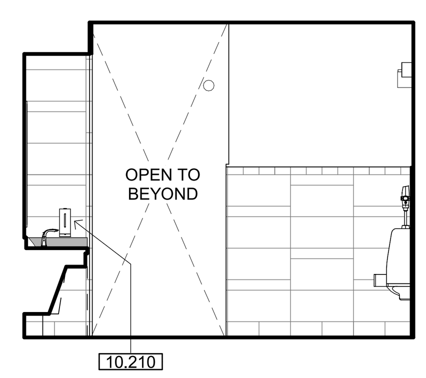

⑯ E119 MEN'S RESTROOM - NORTH
1/4" = 1'-0"

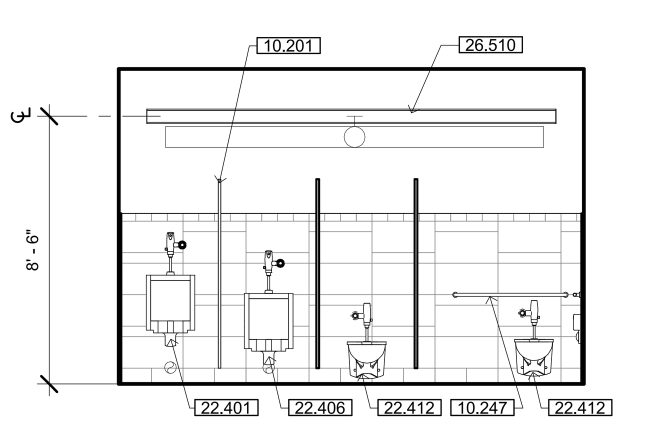

⑰ E119 MEN'S RESTROOM - EAST
1/4" = 1'-0"

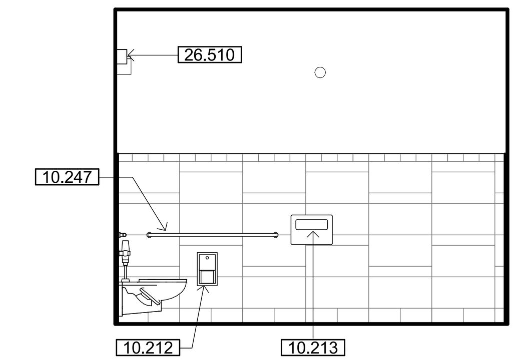

⑱ E119 MEN'S RESTROOM - SOUTH
1/4" = 1'-0"

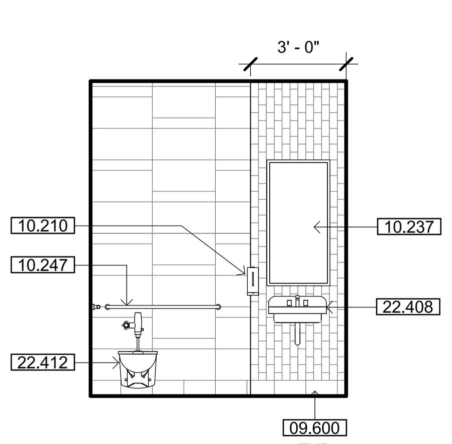

⑲ E125 RESTROOM - W
1/4" = 1'-0"

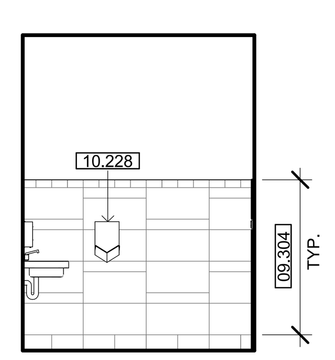

⑳ E125 RESTROOM - N
1/4" = 1'-0"

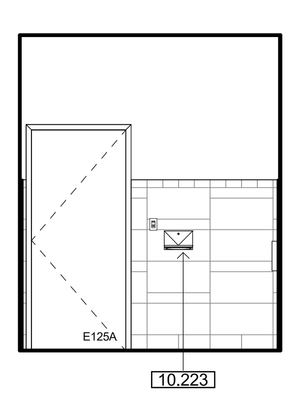

㉑ E125 RESTROOM - EAST
1/4" = 1'-0"

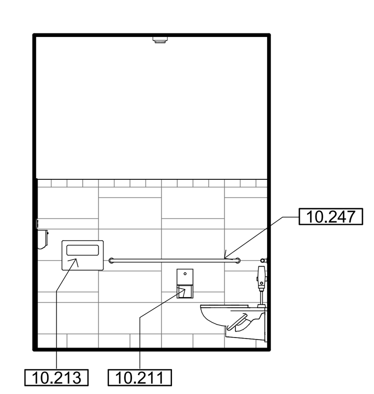

㉒ E125 RESTROOM - SOUTH
1/4" = 1'-0"

Plot Date: 3/19/2021 8:32:22 AM
File Name: BIM 360://CCC Willits Residential Center/A_CCC-WRC-ED.rvt

KEYNOTES

06.409	PLASTIC LAMINATE COUNTERTOP
06.415	ACCESSIBLE BASE CABINET WITH COUNTERTOP WITH SPLASH ON 3 SIDES
09.304	TILE WAINSCOT-SEE FINISH SCHEDULE
09.600	BASE-SEE FINISH SCHEDULE
09.705	FRP PANEL-SEE FINISH SCHEDULE
09.806	ACOUSTICAL WALL TILE
10.103	MARKERBOARD - C.F.C.I.
10.119	WHITEBOARD, DRY ERASE W/ TACK BOARD.
10.120	TACK BOARD
10.201	TOILET COMPARTMENT - OVERHEAD BRACE - SEE 8/A960
10.210	SOAP DISPENSER
10.211	SURFACE MOUNTED TOILET TISSUE DISPENSER
10.212	SEMI-RECESSED TOILET TISSUE DISPENSER
10.213	SURFACE MOUNTED TOILET SEAT COVER DISPENSER
10.223	SURFACE MOUNTED PAPER TOWEL DISPENSER
10.228	HAND DRYER
10.237	24"W X 48"H MIRROR
10.247	GRAB BARS, 48" AT SIDE & 42" AT BACK - SEE DETAIL 4/A960
10.406	SEMI-RECESSED FIRE EXTINGUISHER CABINET PER DETAIL 2B/A960
11.203	COMBINATION UTILITY SHELF WITH MOP AND BROOM HOLDER
11.552	WALL MOUNTED TELEVISION, C.F.C.I - SEE DETAIL 17/A960
22.401	URINAL - SEE PLUMBING DRAWINGS
22.406	ACCESSIBLE URINAL - SEE PLUMBING DRAWINGS
22.408	ACCESSIBLE LAVATORY - SEE PLUMBING DRAWINGS
22.412	ACCESSIBLE WALL HUNG TOILET
22.418	JANITOR SINK-SEE PLUMBING DRAWINGS
26.506	WALL MOUNTED LIGHT FIXTURE-CENTER BETWEEN MIRROR
26.509	LINEAR LED LIGHT FIXTURE RECESSED INTO CEILING
26.510	WALL MOUNTED UP/DOWN LIGHT FIXTURE

INTERIOR ELEV. LEGEND

###X	CASEWORK TAG - SEE SHEET A940
X	SIGNAGE TAG - SEE SHEET A965
B##X	DOOR TAG - SEE SCHEDULE, SHEET A710
X	WINDOW TAG - SEE SCHEDULE, SHEET A720
	GYPSUM BOARD - PAINT
	WALL TILE WT-1/2 OVER CEMENTITIOUS BACKER BOARD
	WALL TILE WT-3 OVER CEMENTITIOUS BACKER BOARD
	FIBER REINFORCED PLASTIC (FRP) WALL PROTECTION OVER GYPSUM BOARD
	SOLID SURFACE PANEL OVER CEMENTITIOUS BACKER BOARD
	ACOUSTIC WALL TILE

INTERIOR ELEV. GEN. NOTES

A. GENERAL CONTRACTOR TO PROVIDE STRUCTURAL SUPPORT, BACKING AND/OR METAL REINFORCEMENT IN STUD WALLS AT ALL CASEWORK, CABINETS, SHELVING, EQUIPMENT ETC. REFER TO G212 & G213 FOR TYPICAL MOUNTING HEIGHTS AND ARRANGEMENTS OF COMMON SPECIALTY ITEMS INCLUDING SHOWERS AND TOILET ROOMS.

B. SEE SHEET 18/A960 FOR TYP. ACCESSORY MOUNTING

C. SEE MECHANICAL, ELECTRICAL & LOW VOLTAGE DRAWINGS FOR EXTENT AND LOCATION OF ADDITIONAL WALL MOUNTED ITEMS SUCH AS CARD READERS, THERMOSTATS, SWITCHES, OUTLETS, CLOCKS, NURSECALL LIGHTS, FIRE ALARM, ETC. LOCATE ALL OUTLETS, SWITCHES, EQUIP., RECEPTACLE BOXES & OTHER SIMILAR RELATED ITEMS FOR OWNER'S FINAL APPROVAL PRIOR TO CONDUIT/PIPE INSTALLATION.

D. CONTRACTOR TO COORDINATE LOCATION OF CONTRACTOR OR OWNER FURNISHED ITEMS.

E. REFER TO FINISH SCHEDULE AND SPECIFICATIONS FOR SPECIFIC FINISH MATERIAL.

F. ALL VERTICAL DIMENSIONS ARE FROM FINISHED FLOOR, U.N.O.

G. ALL RECESSED SPECIALTIES SHOWN ON ELEVATIONS THAT ARE LOCATED IN FIRE RATED WALLS ARE TO BE 5-SIDED WITH 5/8" TYPE 'X' GYPBOARD SIMILAR TO 3/A961

H. WHERE OUTLETS, MONITORS AND LIGHT SWITCHES ARE NOT DIMENSIONED AT A GIVEN ELEVATION, CAN BE ASSUMED TO BE SIMILAR TO THE ONE ON THE ELEVATION THAT IS DIMENSIONED. WHERE OUTLETS ARE DIMENSIONED ON AN ELEVATION THE TYPICAL FRAMING MUST BE ALTERED AND/OR STUDS HEADED OFF TO ACCOMMODATE DIMENSIONED LOCATIONS AND SHOWN.

I. ALL WALL SURFACES IN NEED OF REPAIR SHALL BE FILLED, SPACKLED AND TEXTURED TO MATCH THE EXISTING WALLS. FINISH AS SPECIFIED.

BUILT-IN CASEWORK NOTES

AA. PROVIDE BACKSPLASH AND ENDSPLASH OF MATERIAL MATCHING COUNTERTOP ON ALL COUNTERTOPS U.O.N. BACKSPLASH TO RETURN AT CABINET ENDS - SEE DETAIL OR NOTES FOR HEIGHTS.

BB. PROVIDE PLAM END PANEL WHERE COUNTERTOP ENDS WITHOUT BASE UNIT OR SUPPORTING WALL.

CC. PROVIDE "FLOATING WALL-MOUNT BRACKET" @ 32" O.C. AT ANY OPEN COUNTER WITH SPAN GREATER THAN 3'-0" WIDTH. SEE 10/A940. CONTRACTOR TO VERFIY COORDINATION OF TRADES FOR IN-WALL INSTALLATION

DD. PROVIDE (1) ADJUSTABLE SHELF AT BASE CABINETS EXCEPT SINK BASE, U.O.N.

EE. FIELD VERIFY ALL DIMENSIONS AND EQUIPMENT SIZES PRIOR TO CASEWORK FABRICATION.

FF. PROVIDE 3" DIAMETER GROMMETS AT BACK OF COUNTERTOP AS DIRECTED BY OWNER.

GG. ALL SHELVES ARE ADJUSTABLE, U.O.N.

IDENTIFICATION STAMP
DIV. OF THE STATE ARCHITECT
APP: 02-118630 INC:
REVIEWED FOR
SS ☐ FLS ☐ ACS ☑
DATE: 04/13/2021

OFFICE OF THE STATE FIRE MARSHAL
APPROVED FIRE AND PANIC ONLY
Approval of this plan does not authorize or approve any omission or deviation from applicable regulations. Final approval is subject to field inspection. One set of approved plans shall be available on the project site at all times.
PERMIT NO.: 20-N-2332-CP
REVIEWED BY: LITO CATAYLO, OSFM
DATE: 4/1/2021

GENERAL SERVICES
Department of General Services
State of California
Real Estate Services Division
Project Management & Development Branch
707 Third Street, Suite 4-105
West Sacramento, California 95605

NICHOLS MELBURG & ROSSETTO
ARCHITECTS + ENGINEERS
300 Knollcrest Drive
Redding, CA. 96002
(530) 222-3300 (530) 222-3538 FAX
http://www.nmrdesign.com

Copyright © 2020
All ideas, designs, arrangements and plans indicated or represented by this drawing are owned by, and the property of, NICHOLS, MELBURG and ROSSETTO and were created, evolved and developed for use on, and in conjunction with, the specified project. None of such ideas, designs, arrangements or plans shall be used by, or disclosed to any person, firm or corporation for any purpose whatsoever without the written permission of NICHOLS, MELBURG and ROSSETTO.

LICENSE STAMPS
LICENSED ARCHITECT KYLE MATTI C 27504 REN. 10/31/21 STATE OF CALIFORNIA

CONSULTANT

DRAWING STATUS
CONSTRUCTION DOCUMENTS

ISSUE

No.	Date	Description
1	10/20/2020	INITIAL PLAN REVIEW
2	01/22/2021	AGENCY RESUBMITTAL
3	03/22/2021	AGENCY RESUBMITTAL

If drawing is not 30" x 42" it is a reduced print

PROJECT
RESIDENTIAL CENTER, UKIAH: REPLACEMENT OF EXISTING RESIDENTIAL CENTER
440 EAST HILL ROAD
WILLITS, CALIFORNIA 95490
MENDOCINO COUNTY
CALIFORNIA CONSERVATION CORPS

Supervisor	Designed	Drawn
KJM	DMH	MO

DSA Application No.
02-118630

SHEET TITLE
EDUCATION INTERIOR ELEVATIONS

DGS Project Number 000000000001826
NMR Project Number 18-6456

Reference North — NORTH
Sheet Scale: As indicated
Sheet Number: A500E

ISSUE DATE
July 9, 2021

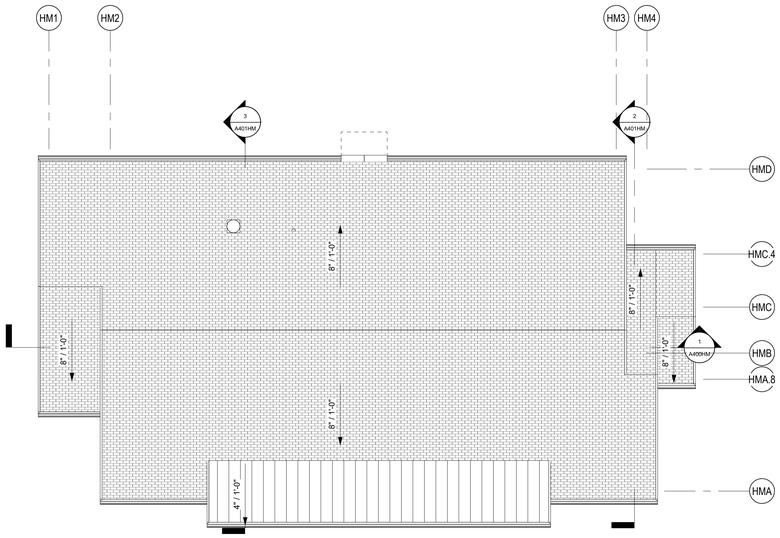

NORTH

MEN'S HOUSING ROOF PLAN

SCALE: 1/8" = 1'-0"

ROOF PLAN NOTES

A. ALL PIPE PENETRATIONS NOT SHOWN. SEE MECHANICAL & PLUMBING DRAWINGS FOR LOCATION INFORMATION, SEE ROOF PIPE PENETRATION DETAIL S/A810.

B. HVAC CONDENSATE DRAIN PIPES NOT SHOWN. SEE MECHANICAL & PLUMBING DRAWINGS FOR REQUIREMENTS.

ROOF PLAN LEGEND

REFER TO DRAWING G120 FOR TYPICAL ROOF CONSTRUCTION ASSEMBLIES

ASPHALT SHINGLE ROOFING - SEE SHEET A810

PREFINISHED METAL ROOFING - SEE SHEET A810

ROOF DRAIN & OVERFLOW

GENERAL RCP NOTES

A. MAINTAIN CEILING HEIGHTS AND LIGHTING LAYOUT PATTERNS SHOWN, UNLESS OTHERWISE APPROVED BY ARCHITECT. CONFLICTS CAUSED BY DUCTWORK, SPRINKLER PIPING, CONDUIT, AND/OR OTHER ITEMS OR FEATURES OF CONSTRUCTION SHALL NOT CONSTITUTE CAUSE FOR VARIANCE FROM CEILING HEIGHTS AND/OR LIGHTING LAYOUTS INDICATED IN THESE DRAWINGS. COORDINATE ALL WORK TO ACHIEVE HEIGHTS AND LAYOUTS AS INDICATED IN THESE DRAWINGS.

B. REFER TO MECHANICAL, FIRE PROTECTION, ELECTRICAL, SECURITY, AND AUDIOVISUAL DRAWINGS FOR ADDITIONAL CONSTRUCTION FEATURES, SYSTEMS, FIXTURES, AND EQPT. LOCATED IN, ON, AND ABOVE CEILINGS. TO THE EXTENT THAT THESE ITEMS ARE SHOWN ON REFLECTED CEILING PLANS, THEY ARE FOR GENERAL INFORMATION AND LAYOUT PURPOSES ONLY, AND DO NOT NECESSARILY REPRESENT ACTUAL SCOPE OR QUANTITIES REQUIRED FOR THE PROJECT. ALL QUANTITIES TO BE VERIFIED.

C. AT ACOUSTICAL TILE CEILINGS, ALL FIXTURES AND EQUIPMENT SHALL BE CENTERED WITHIN ACOUSTICAL CEILING TILES, IN BOTH DIRECTIONS.

D. SPRINKLER HEAD LOCATIONS SHALL RESULT IN A UNIFORM AND REPETITIVE PATTERN FOR EACH AREA, AND SHALL BE LOCATED SYMMETRICALLY WITH RESPECT TO WALLS, CEILING GRID PATTERNS, AND LIGHT FIXTURES. SPRINKLER HEADS IN ACOUSTICAL TILE CEILINGS SHALL BE LOCATED IN THE CENTERS OF THE CEILING TILES.

E. TYP. EXTERIOR SOFFIT HEIGHT IS AT UNDERSIDE OF STRUCTURAL FRAMING U.O.N.

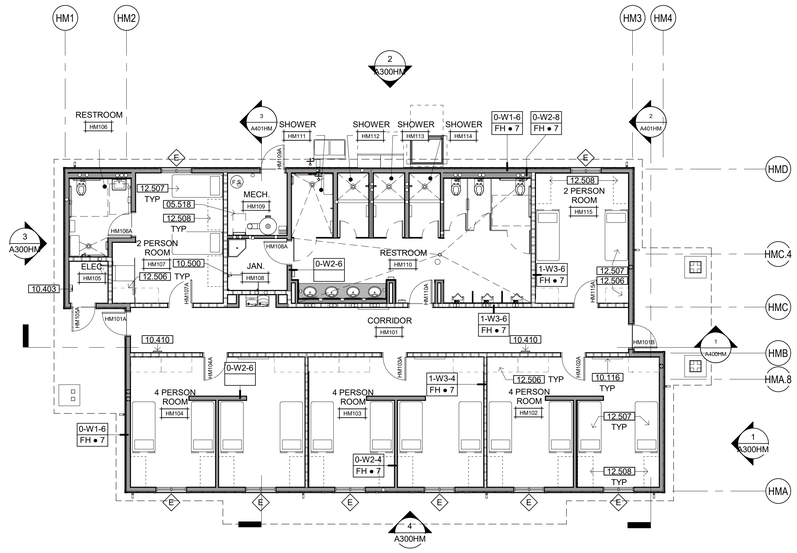

MEN'S HOUSING BUILDING 1 SHOWN - BUILDINGS 2 & 3, SIM.

NORTH

MEN'S HOUSING FLOOR PLAN

SCALE: 1/8" = 1'-0"

KEYNOTE

05.518	PIVOTAL SHIPS LADDER - SEE DETAIL 3/A931
10.116	GLASS DISPLAY MESSAGE BOARD
10.403	SURFACE-MOUNTED FIRE EXTINGUISHER CABINET PER DETAIL 3A/A960
10.410	SEMI-RECESSED 1-HOUR FIRE RATED FIRE EXTINGUISHER CABINET PER DETAIL 1D/A960
10.500	METAL STORAGE SHELVING UNIT
12.203	DOUBLE ROLL WINDOW SHADE, MANUAL. SEE DETAIL 19/A961
12.506	LOCKERS - OFOI
12.507	BED - OFOI
12.508	DESK - OFOI

GENERAL NOTES

A. FOR WALL ASSEMBLIES REFER TO GENERAL ASSEMBLIES, SHEET G121.
B. UNLESS OTHERWISE INDICATED, INTERIOR STUD FRAMED WALLS SHALL BE TYPE 0-2-6.
C. UNLESS OTHERWISE INDICATED, EXTERIOR STUD FRAMED WALLS SHALL BE TYPE 0-1-6.
D. SEE ENLARGED PLANS FOR WALL TYPES NOT INDICATED ON THIS PLAN.
E. REFER TO DETAIL 4/A961 FOR WALL INTERSECTION PRIORITIES.
F. SEE DOOR SCHEDULE, SHEET A710, FOR ADDITIONAL DOOR INFORMATION AND DIMENSIONS. ALL DOOR RATINGS SHALL MATCH OR EXCEED THE RATING OF THE WALL OR PARTITION IN WHICH THEY ARE INSTALLED.
G. SEE WINDOW SCHEDULE, SHEET A720, FOR ADDITIONAL WINDOW INFORMATION AND DIMENSIONS. ALL WINDOW RATINGS SHALL MATCH OR EXCEED THE RATING OF THE WALL OR PARTITION IN WHICH THEY ARE INSTALLED.
H. REFER TO STRUCTURAL NOTES SHEET S011 AND STRUCTURAL DETAIL SHEET S561 FOR TYPICAL WALL FRAMING DETAILS AND REQUIREMENTS
I. REFER TO SHEET A961 FOR HEAD OF WALL ASSEMBLIES
J. REFER TO FINISH SCHEDULE & INTERIOR ELEVATIONS FOR GYPSUM BOARD TYPE & LOCATIONS
K. ALL DIMENSIONS SHALL TAKE PRECEDENCE OVER SCALE SHOWN ON PLANS, SECTIONS AND DETAILS. DIMENSIONS MISSING FROM THE PLANS, OR NEEDED FOR EXECUTION OF WORK, SHALL BE PROVIDED OR CLARIFIED BY THE ARCHITECT BEFORE THE WORK IS INSTALLED. ERRORS RESULTING IN FAILURE TO COMPLY WITH THIS PROCEDURE SHALL BE CORRECTED BY, AND AT THE SOLE EXPENSE OF, THE CONTRACTOR. DIMENSIONS ARE TO FACE OF STUDS OR SLAB UNLESS NOTED OTHERWISE ON DRAWINGS. DO NOT SCALE DRAWINGS. DIMENSIONS NOTED AS "CLEAR" (CLR) ARE TAKEN TO THE FACE OF FINISH MATERIALS. THE CONTRACTOR SHALL VERIFY DIMENSIONS OF PREFABRICATED AND MANUFACTURED ITEMS AND COORDINATE ROUGH OPENINGS ACCORDINGLY.

1. ALL DIMENSIONS ARE TO FACE OF STUD, CENTERLINE OF COLUMNS, FACE OF CONCRETE
2. FINISH FLOOR DIMENSIONS ARE TO TOP OF CONCRETE OR OTHER HARD SURFACE
3. CEILING HEIGHT DIMENSIONS ARE TO FINISH SURFACES

FLOOR PLAN LEGEND

DOOR WITH TAG - SEE SCHEDULE

WINDOW WITH TAG - SEE SCHEDULE

COUNTERTOP OVER CASEWORK - DASHED LINE INDICATES WALL MOUNTED CASEWORK ABOVE - SEE INTERIOR ELEVATIONS

RECESSED FIRE EXTINGUISHER & CABINET (FEC)

SINK / LAVATORY - SEE PLUMBING DRAWINGS

TOILET - SEE PLUMBING DRAWINGS

URINAL - SEE PLUMBING DRAWINGS

DRINKING FOUNTAIN - SEE PLUMBING DRAWINGS

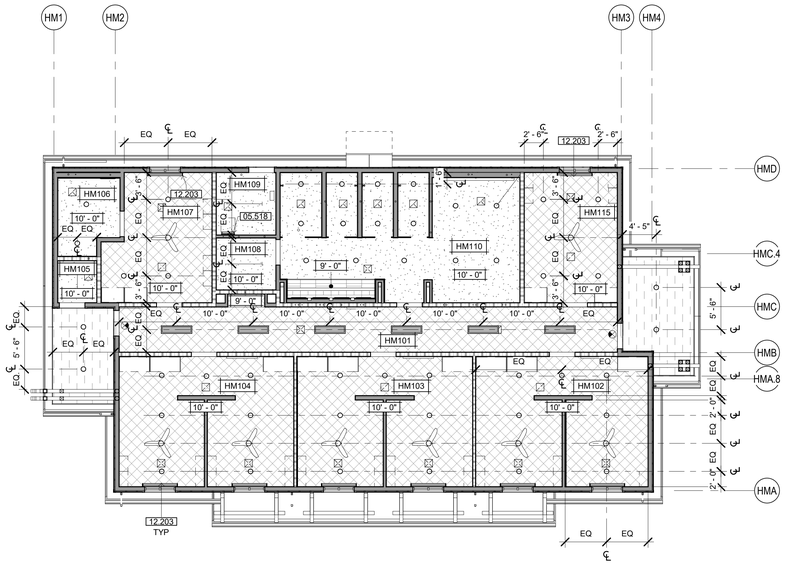

NORTH

MEN'S HOUSING REFLECTED CEILING PLAN

SCALE: 1/8" = 1'-0"

RCP LEGEND

REFER TO DRAWING G120 FOR TYPICAL CEILING CONSTRUCTION ASSEMBLIES

5/8" GYPSUM BOARD CEILING — C 2

EXTERIOR FIBER CEMENT SOFFIT, NON-VENTED

1-HOUR RATED GYPSUM BOARD CEILING SYSTEM — C 1

WT-1

+X'-X" INDICATES HEIGHT OF FINISHED CEILING OR SOFFIT (FROM REFERENCE FLOOR ELEVATION)

6" DIAMETER RECESSED CAN LIGHT FIXTURE - SEE ELECTRICAL DRAWINGS

LINEAR LIGHT FIXTURE - SEE ELECTRICAL DRAWINGS

SUPPLY AIR DIFFUSERS - SEE MECHANICAL DRAWINGS

RETURN AIR DIFFUSER - SEE MECHANICAL DRAWINGS

EXHAUST - SEE MECHANICAL DRAWINGS

DORM ROOM CEILING FAN

FLOURESCENT TUBE LIGHT

1'x4' SURFACE MOUNTED LIGHT

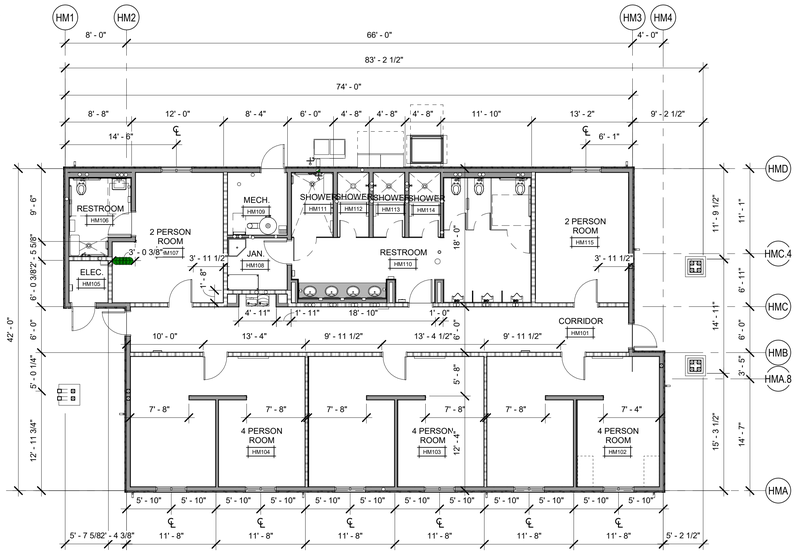

NORTH

MEN'S HOUSING DIMENSION PLAN

SCALE: 1/8" = 1'-0"

WALL TYPES LEGEND

SEE SHEET G121 FOR ASSEMBLY TYPES

EXTERIOR

2 x 6 WOOD STUD WALL - NON RATED	0-W1-6
2 x 12 WOOD STUD WALL - NON RATED	0-W1-12

INTERIOR

2 x 4 WOOD STUD WALL - NON RATED	0-W2-4
2 x 6 WOOD STUD WALL - NON RATED	0-W2-6
2 x 8 WOOD STUD WALL - NON RATED	0-W2-8
2 x 12 WOOD STUD WALL - NON RATED	0-W2-12
2 x 4 WOOD STUD WALL - ACOUSTIC	0-W5-4
2 x 6 WOOD STUD WALL - ACOUSTIC	0-W5-6
2 X 4 WOOD STUD WALL - 1-HR FIRE PARTITION W/ PROTECTED OPENINGS	1-W3-4
2 X 6 WOOD STUD WALL - 1-HR FIRE PARTITION W/ PROTECTED OPENINGS	1-W3-6

WALL TYPE NOTES

PARTITION SYMBOL

FIRE-RESISTIVE RATING
ASSEMBLY DETAIL NUMBER
NOMINAL STUD SIZE

= SPECIAL CONDITIONS
* = PARTITION HEIGHT

IDENTIFICATION STAMP
DIV. OF THE STATE ARCHITECT
APP: 02-118630 INC:
REVIEWED FOR
SS ☐ FLS ☐ ACS ☑
DATE: 04/13/2021

OFFICE OF THE STATE FIRE MARSHAL
APPROVED FIRE AND PANIC ONLY
Approval of this plan does not authorize or approve any omission or deviation from applicable regulations. Final approval is subject to field inspection. One set of approved plans shall be available on the project site at all times.
PERMIT NO. 20-N-2332-CP
REVIEWED BY: LEO CATAYLO, OSFM
DATE: 4 / /2021

DGS GENERAL SERVICES
Department of General Services
State of California
Real Estate Services Division
Project Management & Development Branch
707 Third Street, Suite 4-105
West Sacramento, California 95605

NICHOLS MELBURG & ROSSETTO ARCHITECTS + ENGINEERS
300 Knollcrest Drive
Redding, CA. 96002
(530) 222-3300 (530) 222-3538 FAX
http://www.nmrdesign.com

Copyright © 2020
All ideas, designs, arrangements and plans indicated or represented by this drawing are owned by, and the property of, NICHOLS, MELBURG and ROSSETTO and were created, evolved and developed for use on, and in conjunction with, the specified project. None of such ideas, designs, arrangements or plans shall be used by, or disclosed to any person, firm or corporation for any purpose whatsoever without the written permission of NICHOLS, MELBURG and ROSSETTO.

LICENSE STAMPS

LICENSED ARCHITECT KYLE MATT C-32504 REN. 10/31/21 STATE OF CALIFORNIA

CONSULTANT

DRAWING STATUS
CONSTRUCTION DOCUMENTS

ISSUE

No.	Date	Description
1	10/20/2020	INITIAL PLAN REVIEW
2	01/22/2021	AGENCY RESUBMITTAL
3	03/22/2021	AGENCY RESUBMITTAL

If drawing is not 30" x 42" it is a reduced print

PROJECT
RESIDENTIAL CENTER, UKIAH: REPLACEMENT OF EXISTING RESIDENTIAL CENTER
440 EAST HILL ROAD
WILLITS, CALIFORNIA 95490
MENDOCINO COUNTY
CALIFORNIA CONSERVATION CORPS

Supervisor	Designed	Drawn
KJM	DMH	CW

DSA Application No.
02-118630

SHEET TITLE
MEN'S HOUSING FLOOR PLAN, DIMENSION PLAN, ROOF PLAN, RCP

DGS Project Number: 00000000001826
NMR Project Number: 18-6456

Reference North
Sheet Scale: As indicated
Sheet Number: A201HM

ISSUE DATE
July 9, 2021

Plot Date: 5/19/2021 12:21:32 PM
File Name: BIM 360://22-C2-Willits Residential Center/A_CCC-WRC-DORM-MEN.rvt

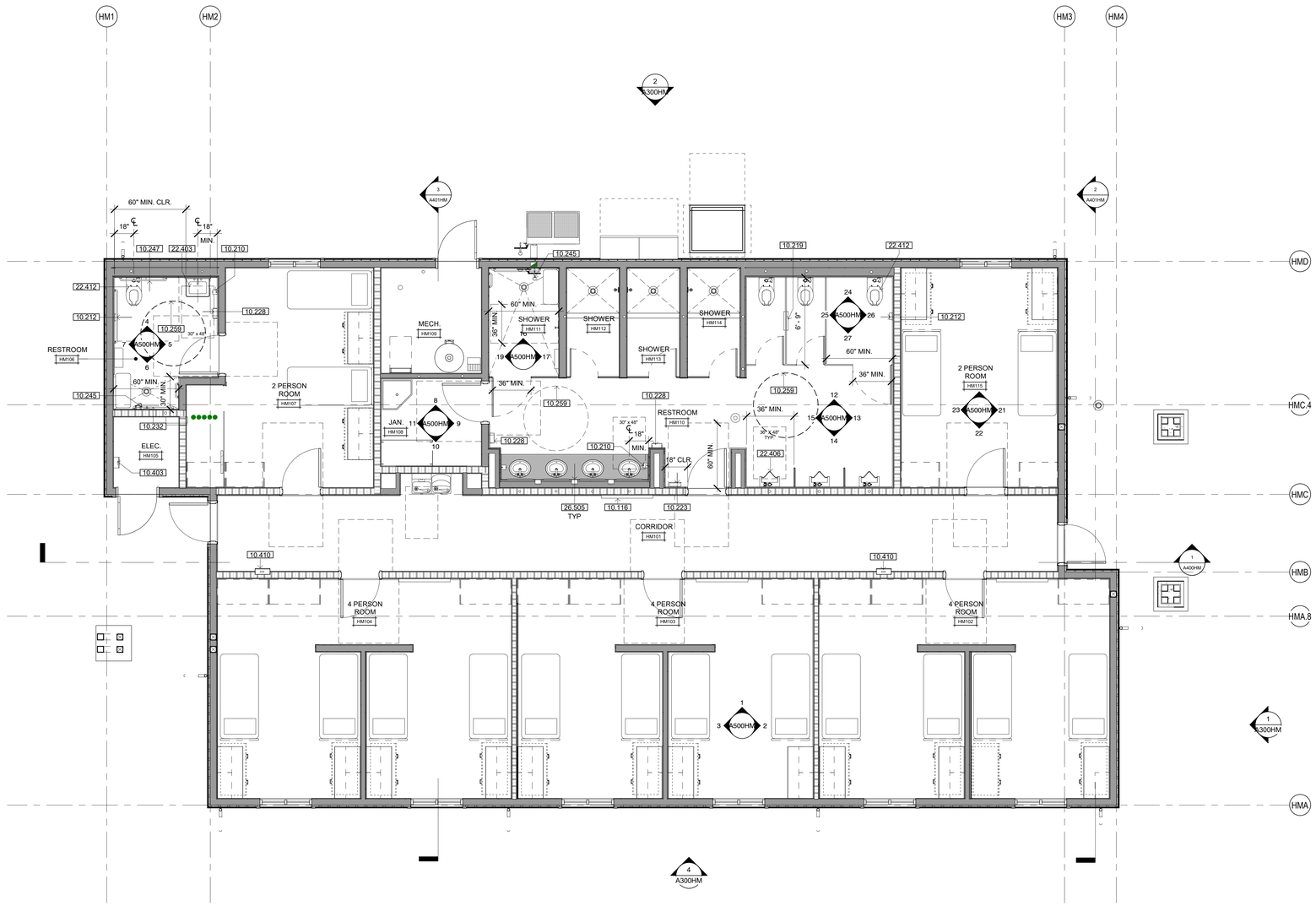

ENLARGED FLOOR PLAN

SCALE: 1/4" = 1'-0"

KEYNOTES

10.116	GLASS DISPLAY MESSAGE BOARD
10.210	SOAP DISPENSER
10.212	SEMI-RECESSED TOILET TISSUE DISPENSER
10.219	PARTITION MOUNTED DUAL-SIDED COMBINATION TOILET TISSUE DISPENSER, SEAT COVER DISPENSER AND SANITARY NAPKIN DISPOSAL
10.223	SURFACE MOUNTED PAPER TOWEL DISPENSER
10.228	HAND DRYER
10.232	GRAB BAR - SEE DETAIL 4/A960
10.245	AT ACCESSIBLE SHOWER, PROVIDE: STAINLESS STEEL SHOWER ROD WITH CURTAIN AND S.S. HANGERS. FOLD-DOWN SEAT, 24"/36" CORNER GRAB BARS, RECESSED S.S. SOAP DISH AND 60" LONG FLEXIBLE SHOWER SPRAY HOSE
10.247	GRAB BARS, 48" AT SIDE & 42" AT BACK - SEE DETAIL 4/A960
10.259	60" DIAMETER TURNING RADIUS
10.403	SURFACE-MOUNTED FIRE EXTINGUISHER CABINET PER DETAIL 3A/A960
10.410	SEMI-RECESSED 1-HOUR FIRE RATED FIRE EXTINGUISHER CABINET PER DETAIL 1D/A960
22.403	LAVATORY - SEE PLUMBING DRAWINGS
22.406	ACCESSIBLE URINAL - SEE PLUMBING DRAWINGS
22.412	ACCESSIBLE WALL HUNG TOILET
26.505	RECESSED LIGHT FIXTURE

IDENTIFICATION STAMP
DIV. OF THE STATE ARCHITECT
APP: 02-118630 INC:
REVIEWED FOR
SS ☐ FLS ☐ ACS ☑
DATE: 04/13/2021

OFFICE OF THE STATE FIRE MARSHAL
APPROVED FIRE AND PANIC ONLY
Approval of this plan does not authorize or approve any omission or deviation from applicable regulations. Final approval is subject to field inspection. One set of approved plans shall be available on the project site at all times.
PERMIT NO. 20 N 2332 CP
REVIEWED BY: LEO CATAYLO, OSFM
DATE: 4 / /2021

GENERAL SERVICES
Department of General Services
State of California
Real Estate Services Division
Project Management & Development Branch
707 Third Street, Suite 4-105
West Sacramento, California 95605

NICHOLS MELBURG & ROSSETTO
ARCHITECTS + ENGINEERS
300 Knollcrest Drive
Redding, CA 96002
(530) 222-3300 (530) 222-3538 FAX
http://www.nmrdesign.com

Copyright © 2020
All ideas, designs, arrangements and plans indicated or represented by this drawing are owned by, and the property of, NICHOLS, MELBURG and ROSSETTO and were created, evolved and developed for use on, and in conjunction with, the specified project. None of such ideas, designs, arrangements or plans shall be used by, or disclosed to any person, firm or corporation for any purpose whatsoever without the written permission of NICHOLS, MELBURG and ROSSETTO

LICENSE STAMPS

LICENSED ARCHITECT KYLE MATTHEW ROSSETTO C-27504 REN 10/31/21 STATE OF CALIFORNIA

CONSULTANT

DRAWING STATUS
CONSTRUCTION DOCUMENTS

ISSUE

No.	Date	Description
1	10/20/2020	INITIAL PLAN REVIEW
2	01/22/2021	AGENCY RESUBMITTAL
3	03/22/2021	AGENCY RESUBMITTAL

If drawing is not 30" x 42" it is a reduced print

PROJECT
RESIDENTIAL CENTER, UKIAH: REPLACEMENT OF EXISTING RESIDENTIAL CENTER
440 EAST HILL ROAD
WILLITS, CALIFORNIA 95490
MENDOCINO COUNTY
CALIFORNIA CONSERVATION CORPS

Supervisor	Designed	Drawn
KJM	DMH	Author

DSA Application No.
02-118630

SHEET TITLE
MEN'S HOUSING ENLARGED FLOOR PLAN

DGS Project Number: 000000000001826
NMR Project Number: 18-6456

Reference North
Sheet Scale: 1/4" = 1'-0"
Sheet Number: A220HM

ISSUE DATE
July 9, 2021

Plot Date: 3/18/2021 12:51:07 PM
File Name: BIM 360://CCC\ Willits Residential Center/A_CCC-WRC-DORM-MEN.rvt

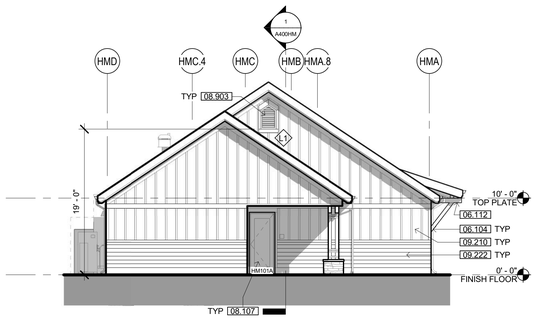

3 ELEVATION - WEST

SCALE: 1/8" = 1'-0"

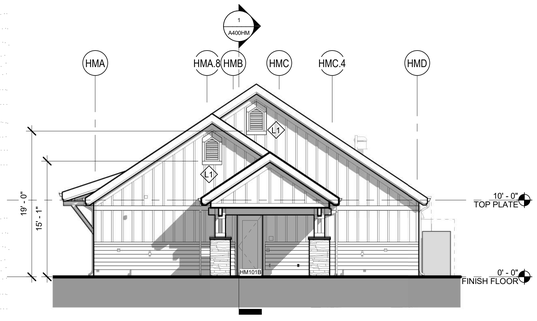

1 ELEVATION - EAST

SCALE: 1/8" = 1'-0"

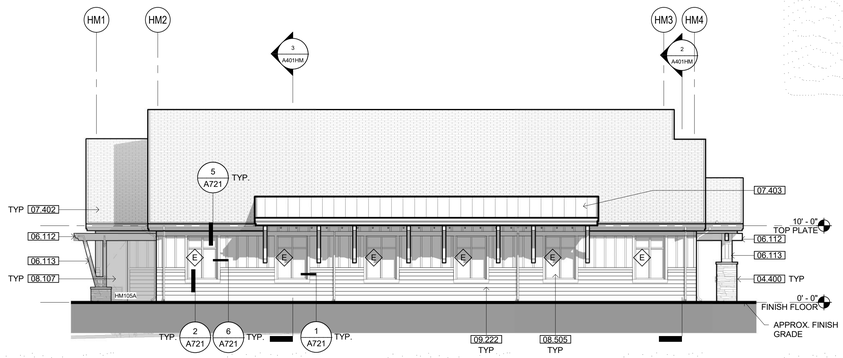

4 ELEVATION - SOUTH

SCALE: 1/8" = 1'-0"

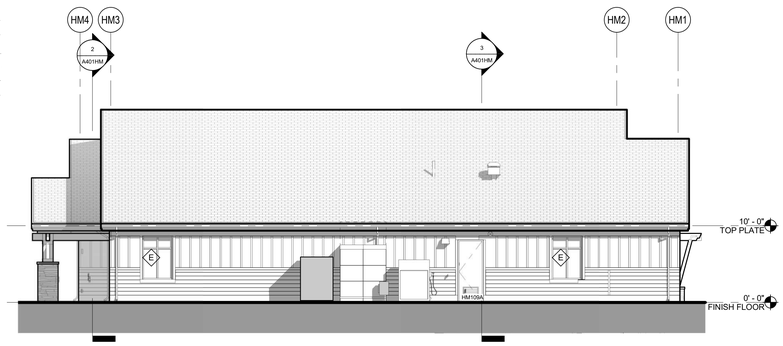

2 ELEVATION - NORTH

SCALE: 1/8" = 1'-0"

KEYNOTE

04.400	ADHERED STONE VENEER WAINSCOT
06.104	HEAVY TIMBER KNEE BRACE, PAINTED
06.112	HEAVY TIMBER BEAM, PAINTED
06.113	HEAVY TIMBER COLUMN, PAINTED
07.402	COMPOSITION SHINGLE ROOFING
07.403	STANDING SEAM METAL ROOF SYSTEM, FACTORY PRE-FINISHED
08.107	INSULATED METAL DOOR IN HOLLOW METAL FRAME, PAINTED
08.505	DUAL-GLAZED VINYL WINDOWS
08.903	OUTDOOR AIR INTAKE LOUVER
09.210	FIBER CEMENT BATTENS O/ FIBER CEMENT SIDING PANELS O/ RIGID INSULATION
09.222	FIBER CEMENT LAP SIDING SYSTEM O/ RIGID INSULATION

EXTERIOR ELEV. LEGEND

B##X DOOR TAG - SEE SCHEDULE, SHEET A710

X WINDOW TAG - SEE SCHEDULE, SHEET A720

IDENTIFICATION STAMP
DIV. OF THE STATE ARCHITECT
APP: 02-118630 INC:
REVIEWED FOR
SS ☐ FLS ☐ ACS ☑
DATE: 04/13/2021

OFFICE OF THE STATE FIRE MARSHAL
APPROVED FIRE AND PANIC ONLY
Approval of this plan does not authorize or approve any omission or deviation from applicable regulations. Final approval is subject to field inspection. One set of approved plans shall be available on the project site at all times.
PERMIT NO. 20-N-2332-CP
REVIEWED BY: LEO CATAYLO, OSFM
DATE: 4 / /2021

DGS GENERAL SERVICES
Department of General Services
State of California
Real Estate Services Division
Project Management & Development Branch
707 Third Street, Suite 4-105
West Sacramento, California 95605

NICHOLS MELBURG & ROSSETTO
ARCHITECTS + ENGINEERS
300 Knollcrest Drive
Redding, CA. 96002
(530) 222-3300 (530) 222-3538 FAX
http://www.nmrdesign.com

Copyright © 2020
All ideas, designs, arrangements and plans indicated or represented by this drawing are owned by, and the property of, NICHOLS, MELBURG and ROSSETTO and were created, evolved and developed for use on, and in conjunction with, the specified project. None of such ideas, designs, arrangements or plans shall be used by, or disclosed to any person, firm or corporation for any purpose whatsoever without the written permission of NICHOLS, MELBURG and ROSSETTO.

LICENSE STAMPS

LICENSED ARCHITECT KYLE M. ROSSETTO C-31504 REN. 10/31/21 STATE OF CALIFORNIA

CONSULTANT

DRAWING STATUS
CONSTRUCTION DOCUMENTS

ISSUE

No.	Date	Description
1	10/20/2020	INITIAL PLAN REVIEW
2	01/22/2021	AGENCY RESUBMITTAL
3	03/22/2021	AGENCY RESUBMITTAL

If drawing is not 30" x 42" it is a reduced print

PROJECT
RESIDENTIAL CENTER, UKIAH: REPLACEMENT OF EXISTING RESIDENTIAL CENTER
440 EAST HILL ROAD
WILLITS, CALIFORNIA 95490
MENDOCINO COUNTY
CALIFORNIA CONSERVATION CORPS

Supervisor	Designed	Drawn
KJM	DMH	Author

DSA Application No.
02-118630

SHEET TITLE
MEN'S HOUSING
EXTERIOR
ELEVATIONS

DGS Project Number: 000000000001826
NMR Project Number: 18-6456

Reference North: NORTH
Sheet Scale: 1/8" = 1'-0"
Sheet Number: A300HM

ISSUE DATE
July 9, 2021

Plot Date: 3/19/2021 12:25:54 PM
File Name: BIM 360://CCC-Willits Residential Center/A_CCC-WRC-DORM-MEN.rvt

SHEET NOTES

03.302	CONCRETE SLAB, SEE STRUCTURAL DRAWINGS
03.303	CONCRETE FOOTING, SEE STRUCTURAL DRAWINGS
04.400	ADHERED STONE VENEER WAINSCOT
06.109	WOOD FRAMED TRUSS
06.113	HEAVY TIMBER COLUMN, PAINTED
07.202	RIGID INSULATION
07.203	BATT INSULATION
07.402	COMPOSITION SHINGLE ROOFING
08.103	HOLLOW METAL DOOR & FRAME-SEE DOOR SCHEDULE
09.210	FIBER CEMENT BATTENS O/ FIBER CEMENT SIDING PANELS O/ RIGID INSULATION
09.218	GYPSUM BOARD CEILING ATTACHED TO BOTTOM CORD OF ROOF TRUSS
09.219	SUSPENDED GYPSUM BOARD CEILING-SEE DETAIL --/--
09.222	FIBER CEMENT LAP SIDING SYSTEM O/ RIGID INSULATION
09.600	BASE-SEE FINISH SCHEDULE
10.116	GLASS DISPLAY MESSAGE BOARD
10.207	CORNER GUARD - SEE FINISH SCHEDULE

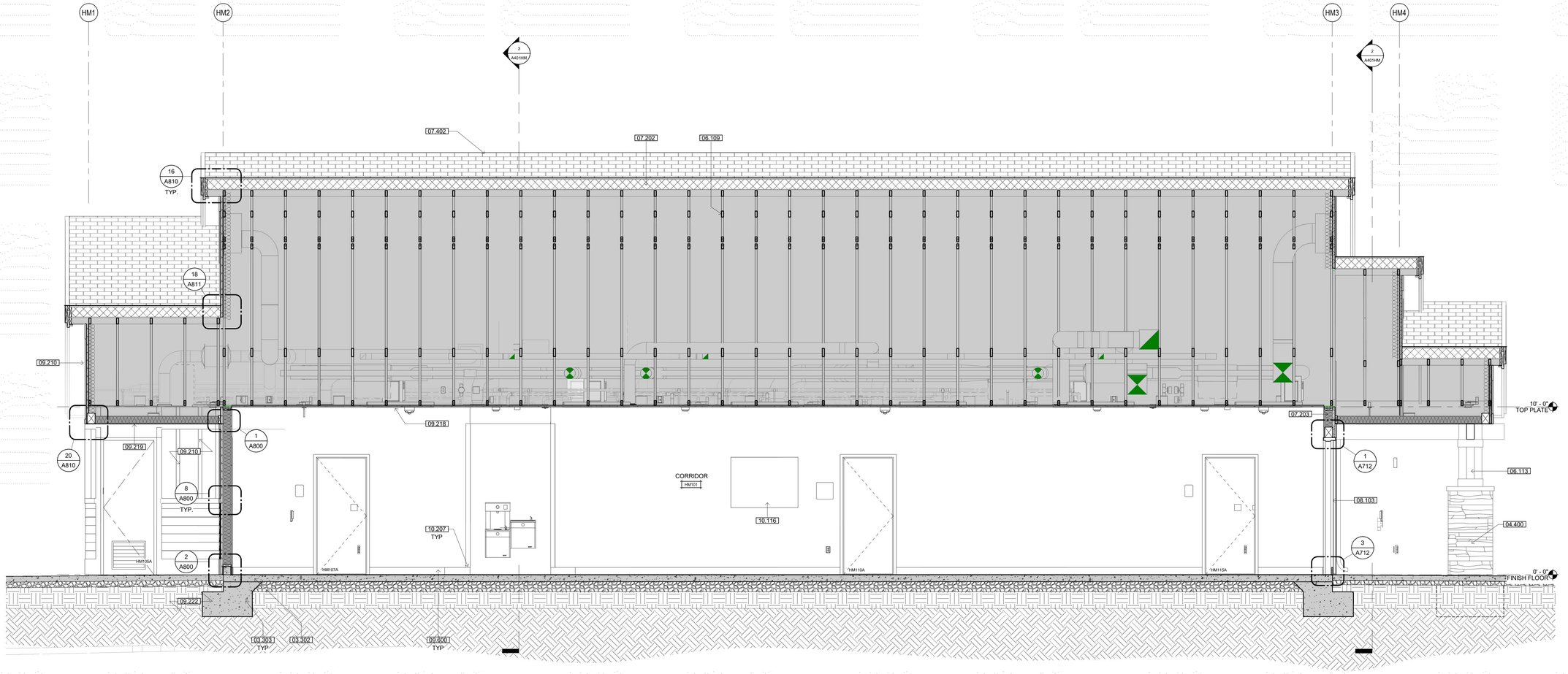

1 BUILDING SECTION

SCALE: 3/8" = 1'-0"

Plot Date: 5/19/2021 12:23:48 PM
File Name: BIM 360://CCC Wills Residential Center/A_CCC-WRC-DORM-MEN.rvt

IDENTIFICATION STAMP
DIV. OF THE STATE ARCHITECT
APP: 02-118630 INC:
REVIEWED FOR
SS ☐ FLS ☐ ACS ☑
DATE: 04/13/2021

OFFICE OF THE STATE FIRE MARSHAL
APPROVED FIRE AND PANIC ONLY
Approval of this plan does not authorize or approve any omission or deviation from applicable regulations. Final approval is subject to field inspection. One set of approved plans shall be available on the project site at all times.
PERMIT NO. 20-N-2332-CP
REVIEWED BY: LEO CATAYLO, OSFM
DATE: 4 / /2021

GENERAL SERVICES
Department of General Services
State of California
Real Estate Services Division
Project Management & Development Branch
707 Third Street, Suite 4-105
West Sacramento, California 95605

NICHOLS MELBURG & ROSSETTO
ARCHITECTS + ENGINEERS
300 Knollcrest Drive
Redding, CA. 96002
(530) 222-3300 (530) 222-3538 FAX
http://www.nmrdesign.com

Copyright © 2020
All ideas, designs, arrangements and plans indicated or represented by this drawing are owned by, and the property of, NICHOLS, MELBURG and ROSSETTO and were created, evolved and developed for use on, and in conjunction with, the specified project. None of such ideas, designs, arrangements or plans shall be used by, or disclosed to any person, firm or corporation for any purpose whatsoever without the written permission of NICHOLS, MELBURG and ROSSETTO

LICENSE STAMPS

LICENSED ARCHITECT KYLE MATZ C-27504 REN. 10/31/21 STATE OF CALIFORNIA

CONSULTANT

DRAWING STATUS
CONSTRUCTION DOCUMENTS

ISSUE

No.	Date	Description
1	10/20/2020	INITIAL PLAN REVIEW
2	01/22/2021	AGENCY RESUBMITTAL
3	03/22/2021	AGENCY RESUBMITTAL

If drawing is not 30" x 42" it is a reduced print

PROJECT
RESIDENTIAL CENTER, UKIAH: REPLACEMENT OF EXISTING RESIDENTIAL CENTER
440 EAST HILL ROAD
WILLITS, CALIFORNIA 95490
MENDOCINO COUNTY
CALIFORNIA CONSERVATION CORPS

Supervisor	Designed	Drawn
KJM	DMH	Author

DSA Application No.
02-118630

SHEET TITLE
MEN'S HOUSING BUILDING SECTIONS

DGS Project Number: 0000000000001826
NMR Project Number: 18-6456

Reference North: NORTH
Sheet Scale: 3/8" = 1'-0"
Sheet Number: A400HM

ISSUE DATE
July 9, 2021

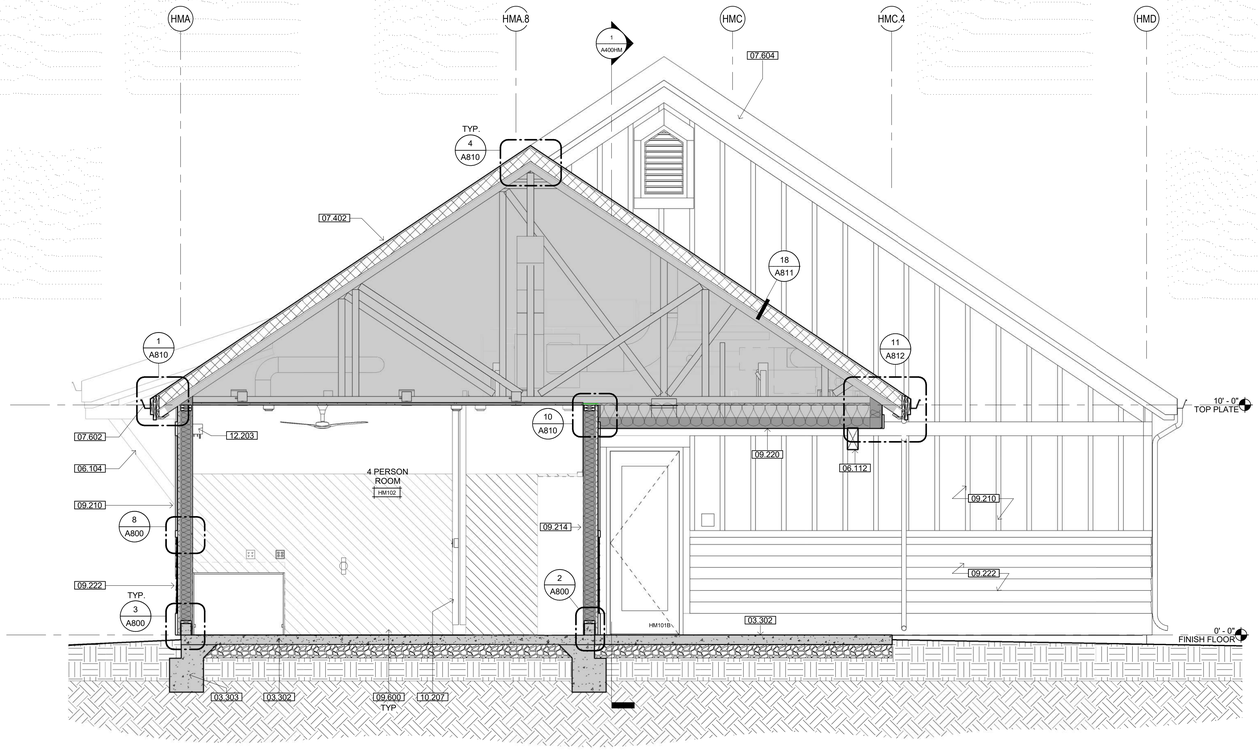

2 BUILDING SECTION

SCALE: 3/8" = 1'-0"

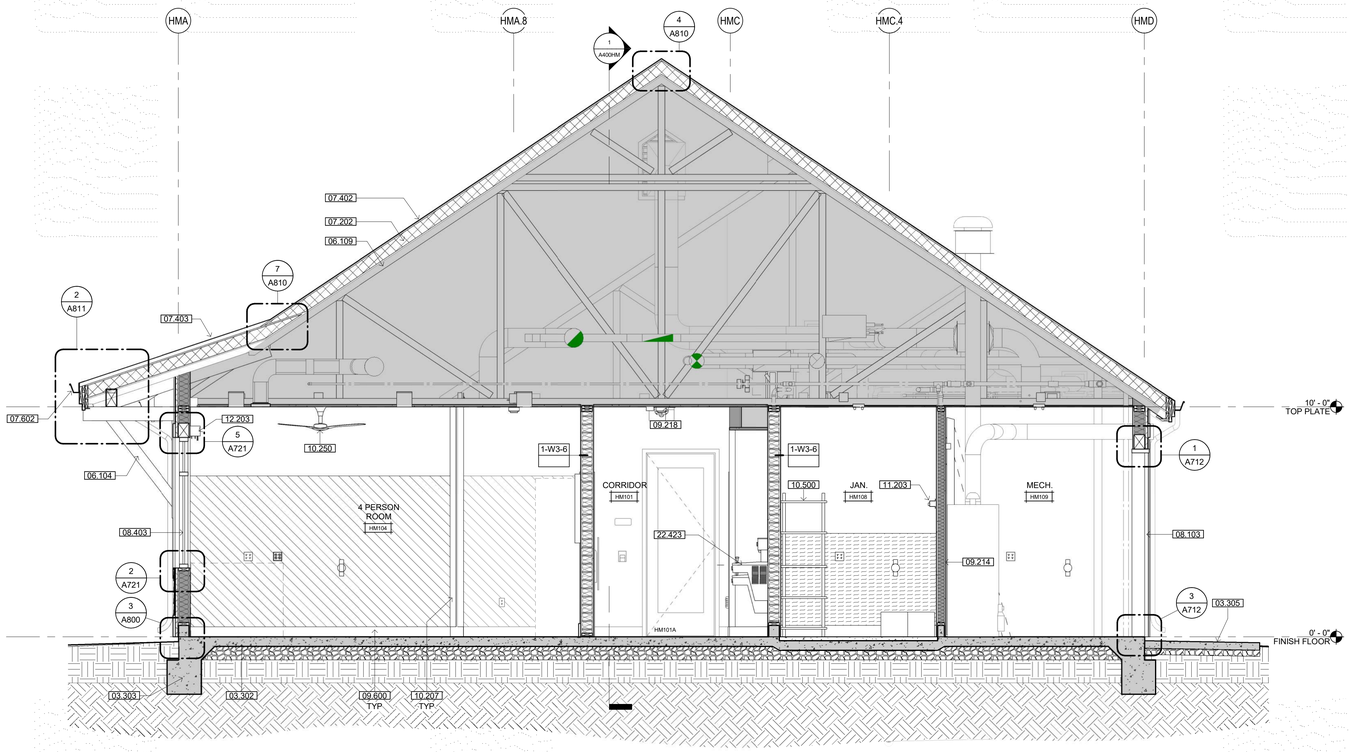

3 BUILDING SECTION

SCALE: 3/8" = 1'-0"

SHEET NOTES

03.302	CONCRETE SLAB, SEE STRUCTURAL DRAWINGS
03.303	CONCRETE FOOTING, SEE STRUCTURAL DRAWINGS
03.305	CONCRETE WALKWAY SLOPED 1.5% AWAY FROM BUILDING
06.104	HEAVY TIMBER KNEE BRACE, PAINTED
06.109	WOOD FRAMED TRUSS
06.112	HEAVY TIMBER BEAM, PAINTED
07.202	RIGID INSULATION
07.402	COMPOSITION SHINGLE ROOFING
07.403	STANDING SEAM METAL ROOF SYSTEM, FACTORY PRE-FINISHED
07.602	PRE-FINISHED METAL GUTTER
07.604	FASCIA & TRIM, PAINTED
08.103	HOLLOW METAL DOOR & FRAME-SEE DOOR SCHEDULE
08.403	STOREFRONT SYSTEM
09.210	FIBER CEMENT BATTENS O/ FIBER CEMENT SIDING PANELS O/ RIGID INSULATION
09.214	GYPSUM BOARD, TYP.
09.218	GYPSUM BOARD CEILING ATTACHED TO BOTTOM CORD OF ROOF TRUSS
09.220	GYPSUM BOARD SOFFIT
09.222	FIBER CEMENT LAP SIDING SYSTEM O/ RIGID INSULATION
09.600	BASE-SEE FINISH SCHEDULE
10.207	CORNER GUARD - SEE FINISH SCHEDULE
10.250	CEILING FAN
10.500	METAL STORAGE SHELVING UNIT
11.203	COMBINATION UTILITY SHELF WITH MOP AND BROOM HOLDER
12.203	DOUBLE ROLL WINDOW SHADE, MANUAL. SEE DETAIL 19/A961
22.423	ACCESSIBLE DRINKING FOUNTAIN HI-LO WITH BOTTLE FILL-SEE DETAIL 4/G212

IDENTIFICATION STAMP
DIV. OF THE STATE ARCHITECT
APP: 02-118630 INC:
REVIEWED FOR
SS ☐ FLS ☐ ACS ☑
DATE: 04/13/2021

OFFICE OF THE STATE FIRE MARSHAL
APPROVED FIRE AND PANIC ONLY
Approval of this plan does not authorize or approve any omission or deviation from applicable regulations. Final approval is subject to field inspection. One set of approved plans shall be available on the project site at all times.
PERMIT NO. 20-N-2332-CP
REVIEWED BY: LEO CATAYLO, OSFM
DATE: 4 / /2021

DGS GENERAL SERVICES
Department of General Services
State of California
Real Estate Services Division
Project Management & Development Branch
707 Third Street, Suite 4-105
West Sacramento, California 95605

NICHOLS MELBURG & ROSSETTO ARCHITECTS + ENGINEERS
300 Knollcrest Drive
Redding, CA. 96002
(530) 222-3300 (530) 222-3538 FAX
http://www.nmrdesign.com

Copyright © 2020
All ideas, designs, arrangements and plans indicated or represented by this drawing are owned by, and the property of, NICHOLS, MELBURG and ROSSETTO and were created, evolved and developed for use on, and in conjunction with, the specified project. None of such ideas, designs, arrangements or plans shall be used by, or disclosed to any person, firm or corporation for any purpose whatsoever without the written permission of NICHOLS, MELBURG and ROSSETTO

LICENSE STAMPS

LICENSED ARCHITECT KYLE MATTHEW ROSSETTO C-27504 REN. 10/31/21 STATE OF CALIFORNIA

CONSULTANT

DRAWING STATUS
CONSTRUCTION DOCUMENTS

ISSUE

No.	Date	Description
1	10/20/2020	INITIAL PLAN REVIEW
2	01/22/2021	AGENCY RESUBMITTAL
3	03/22/2021	AGENCY RESUBMITTAL

If drawing is not 30" x 42" it is a reduced print

PROJECT
RESIDENTIAL CENTER, UKIAH: REPLACEMENT OF EXISTING RESIDENTIAL CENTER
440 EAST HILL ROAD
WILLITS, CALIFORNIA 95490
MENDOCINO COUNTY
CALIFORNIA CONSERVATION CORPS

Supervisor	Designed	Drawn
KJM	DMH	Author

DSA Application No.
02-118630

SHEET TITLE
MEN'S HOUSING BUILDING SECTIONS

DGS Project Number: 000000000001826
NMR Project Number: 18-6456

Reference North: NORTH
Sheet Scale: 3/8" = 1'-0"
Sheet Number: A401HM

ISSUE DATE
July 9, 2021

Plot Date: 3/19/2021 1:52:30 PM
File Name: 818A 3900 /CCC Willits Residential Center/A_CCC-WRC-DORM-MEN.rvt

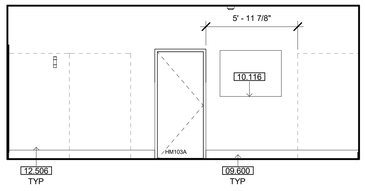

1 HM103 4 PERSON ROOM - NORTH
1/4" = 1'-0"

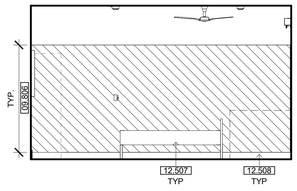

2 HM103 4 PERSON ROOM - EAST
1/4" = 1'-0"

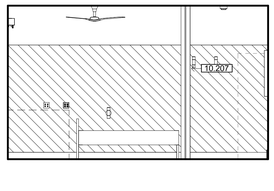

3 HM103 4 PERSON ROOM - WEST
1/4" = 1'-0"

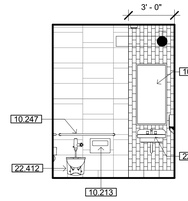

4 HM106 RESTROOM - NORTH
1/4" = 1'-0"

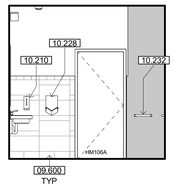

5 HM106 RESTROOM - EAST
1/4" = 1'-0"

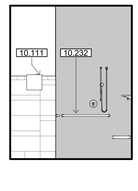

6 HM106 RESTROOM - SOUTH
1/4" = 1'-0"

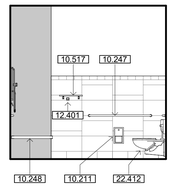

7 HM106 RESTROOM - WEST
1/4" = 1'-0"

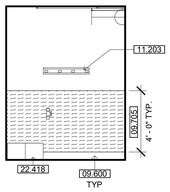

8 HM108 JANITOR - NORTH
1/4" = 1'-0"

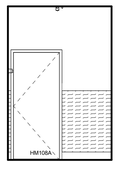

9 HM108 JANITOR - EAST
1/4" = 1'-0"

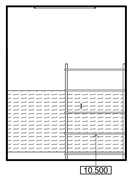

10 HM108 JANITOR - SOUTH
1/4" = 1'-0"

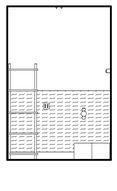

11 HM108 JANITOR - WEST
1/4" = 1'-0"

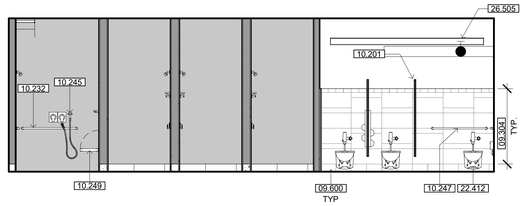

12 HM110 RESTROOM - NORTH
1/4" = 1'-0"

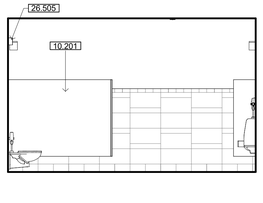

13 HM110 RESTROOM - EAST
1/4" = 1'-0"

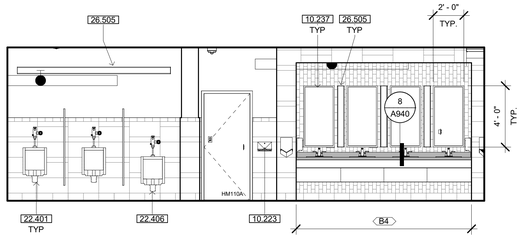

14 HM110 RESTROOM - SOUTH
1/4" = 1'-0"

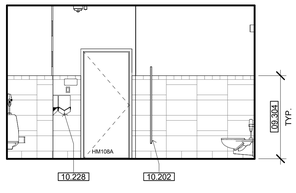

15 HM110 RESTROOM - WEST
1/4" = 1'-0"

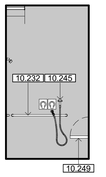

16 HM111 SHOWER- NORTH
1/4" = 1'-0"

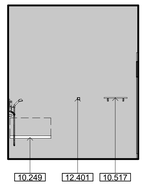

17 HM111 SHOWER- EAST
1/4" = 1'-0"

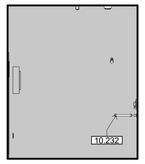

19 HM111 SHOWER- WEST
1/4" = 1'-0"

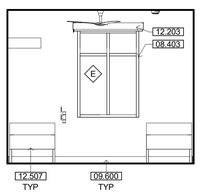

20 HM115 2 PERSON ROOM - NORTH
1/4" = 1'-0"

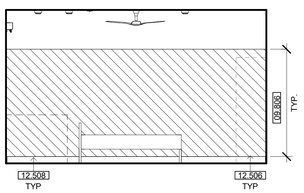

21 HM115 2 PERSON ROOM - EAST
1/4" = 1'-0"

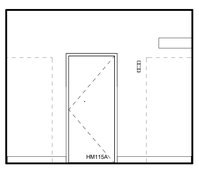

22 HM115 2 PERSON ROOM - SOUTH
1/4" = 1'-0"

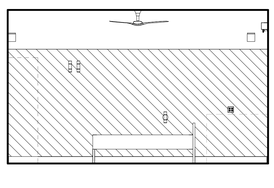

23 HM115 2 PERSON ROOM - WEST
1/4" = 1'-0"

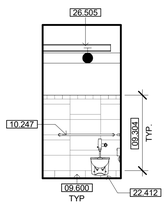

24 HM110 ADA TOILET - NORTH
1/4" = 1'-0"

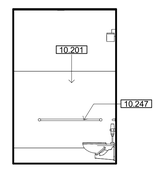

25 HM110 ADA TOILET - WEST
1/4" = 1'-0"

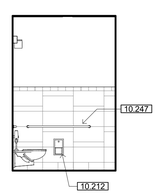

26 HM110 ADA TOILET - EAST
1/4" = 1'-0"

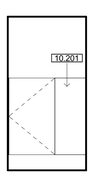

27 HM110 ADA TOILET - SOUTH
1/4" = 1'-0"

KEYNOTES

08.403	STOREFRONT SYSTEM
09.304	TILE WAINSCOT-SEE FINISH SCHEDULE
09.600	BASE-SEE FINISH SCHEDULE
09.705	FRP PANEL-SEE FINISH SCHEDULE
09.806	ACOUSTICAL WALL TILE
10.111	SIGNAGE - SEE SIGNAGE TYPES
10.116	GLASS DISPLAY MESSAGE BOARD
10.201	TOILET COMPARTMENT - OVERHEAD BRACE - SEE 8/A960
10.202	WALL MOUNTED URINAL SCREEN - SEE 15/A960
10.207	CORNER GUARD - SEE FINISH SCHEDULE
10.210	SOAP DISPENSER
10.211	SURFACE MOUNTED TOILET TISSUE DISPENSER
10.212	SEMI-RECESSED TOILET TISSUE DISPENSER
10.213	SURFACE MOUNTED TOILET SEAT COVER DISPENSER
10.223	SURFACE MOUNTED PAPER TOWEL DISPENSER
10.228	HAND DRYER
10.232	GRAB BAR - SEE DETAIL 4/A960
10.237	24"W X 48"H MIRROR
10.245	AT ACCESSIBLE SHOWER, PROVIDE: STAINLESS STEEL SHOWER ROD WITH CURTAIN AND S.S. HANGERS, FOLD-DOWN SEAT, 24"/36" CORNER GRAB BARS, RECESSED S.S. SOAP DISH AND 60" LONG FLEXIBLE SHOWER SPRAY HOSE
10.247	GRAB BARS, 48" AT SIDE & 42" AT BACK - SEE DETAIL 4/A960
10.248	RECESSED WASTE RECEPTACLE
10.249	FOLD DOWN SHOWER SEAT
10.500	METAL STORAGE SHELVING UNIT
10.517	STAINLESS STEEL SHELF, 4" MAX. PROJECTION
11.203	COMBINATION UTILITY SHELF WITH MOP AND BROOM HOLDER
12.203	DOUBLE ROLL WINDOW SHADE, MANUAL. SEE DETAIL 19/A961
12.401	TOWEL HOOK
12.506	LOCKERS - OFOI
12.507	BED - OFOI
12.508	DESK - OFOI
22.401	URINAL - SEE PLUMBING DRAWINGS
22.403	LAVATORY - SEE PLUMBING DRAWINGS
22.406	ACCESSIBLE URINAL - SEE PLUMBING DRAWINGS
22.412	ACCESSIBLE WALL HUNG TOILET
22.418	JANITOR SINK-SEE PLUMBING DRAWINGS
26.505	RECESSED LIGHT FIXTURE

INTERIOR ELEV. LEGEND

- ##X — CASEWORK TAG - SEE SHEET A940
- X — SIGNAGE TAG - SEE SHEET A965
- B##X — DOOR TAG - SEE SCHEDULE, SHEET A710
- X — WINDOW TAG - SEE SCHEDULE, SHEET A720
- GYPSUM BOARD - PAINT
- WALL TILE WT-1/2 OVER CEMENTITIOUS BACKER BOARD
- WALL TILE WT-3 OVER CEMENTITIOUS BACKER BOARD
- SOLID SURFACE MATERIAL OVER CEMENTITIOUS BACKER BOARD
- FIBER REINFORCED PLASTIC (FRP) WALL PROTECTION OVER GYPSUM BOARD
- ACOUSTIC WALL PANELS AWP-2 OVER GYPSUM BOARD

INTERIOR ELEV. GEN. NOTES

A. GENERAL CONTRACTOR TO PROVIDE STRUCTURAL SUPPORT, BACKING AND/OR METAL REINFORCEMENT IN STUD WALLS AT ALL CASEWORK, CABINETS, SHELVING, EQUIPMENT ETC. REFER TO G212 & G213 FOR TYPICAL MOUNTING HEIGHTS AND ARRANGEMENTS OF COMMON SPECIALTY ITEMS INCLUDING SHOWERS AND TOILET ROOMS.

B. SEE SHEET 18/A960 FOR TYP. ACCESSORY MOUNTING

C. SEE MECHANICAL, ELECTRICAL & LOW VOLTAGE DRAWINGS FOR EXTENT AND LOCATION OF ADDITIONAL WALL MOUNTED ITEMS SUCH AS CARD READERS, THERMOSTATS, SWITCHES, OUTLETS, CLOCKS, NURSECALL LIGHTS, FIRE ALARM, ETC. LOCATE ALL OUTLETS, SWITCHES, EQUIP., RECEPTACLE BOXES & OTHER SIMILAR RELATED ITEMS FOR OWNER'S FINAL APPROVAL PRIOR TO CONDUIT/PIPE INSTALLATION.

D. CONTRACTOR TO COORDINATE LOCATION OF CONTRACTOR OR OWNER FURNISHED ITEMS.

E. REFER TO FINISH SCHEDULE AND SPECIFICATIONS FOR SPECIFIC FINISH MATERIAL.

F. ALL VERTICAL DIMENSIONS ARE FROM FINISHED FLOOR, U.N.O.

G. ALL RECESSED SPECIALTIES SHOWN ON ELEVATIONS THAT ARE LOCATED IN FIRE RATED WALLS ARE TO BE S-SIDED WITH 5/8" TYPE 'X' GYPBOARD SIMILAR TO 3/A961

H. WHERE OUTLETS, MONITORS AND LIGHT SWITCHES ARE NOT DIMENSIONED AT A GIVEN ELEVATION, CAN BE ASSUMED TO BE SIMILAR TO THE ONE ON THE ELEVATION THAT IS DIMENSIONED. WHERE OUTLETS ARE DIMENSIONED ON AN ELEVATION THE TYPICAL FRAMING MUST BE ALTERED AND/OR STUDS HEADED OFF TO ACCOMMODATE DIMENSIONED LOCATIONS AND SHOWN.

I. ALL WALL SURFACES IN NEED OF REPAIR SHALL BE FILLED, SPACKLED AND TEXTURED TO MATCH THE EXISTING WALLS. FINISH AS SPECIFIED.

BUILT-IN CASEWORK NOTES

AA. PROVIDE BACKSPLASH AND ENDSPLASH OF MATERIAL MATCHING COUNTERTOP ON ALL COUNTERTOPS U.O.N. BACKSPLASH TO RETURN AT CABINET ENDS - SEE DETAIL OR NOTES FOR HEIGHTS.

BB. PROVIDE PLAM END PANEL WHERE COUNTERTOP ENDS WITHOUT BASE UNIT OR SUPPORTING WALL.

CC. PROVIDE "FLOATING WALL-MOUNT BRACKET" @ 32" O.C. AT ANY OPEN COUNTER WITH SPAN GREATER THAN 3'-0" WIDTH. SEE 10/A940. CONTRACTOR TO VERFIY COORDINATION OF TRADES FOR IN-WALL INSTALLATION

DD. PROVIDE (1) ADJUSTABLE SHELF AT BASE CABINETS EXCEPT SINK BASE, U.O.N.

EE. FIELD VERIFY ALL DIMENSIONS AND EQUIPMENT SIZES PRIOR TO CASEWORK FABRICATION.

FF. PROVIDE 3" DIAMETER GROMMETS AT BACK OF COUNTERTOP AS DIRECTED BY OWNER.

GG. ALL SHELVES ARE ADJUSTABLE, U.O.N.

IDENTIFICATION STAMP
DIV. OF THE STATE ARCHITECT
APP: 02-118630 INC:
REVIEWED FOR
SS ☐ FLS ☐ ACS ☑
DATE: 04/13/2021

OFFICE OF THE STATE FIRE MARSHAL
APPROVED FIRE AND PANIC ONLY
Approval of this plan does not authorize or approve any omission or deviation from applicable regulations. Final approval is subject to field inspection. One set of approved plans shall be available on the project site at all times.
PERMIT NO. 20-N-2332-CP
REVIEWED BY: LEO CATAYLO, OSFM
DATE: 4 / /2021

DGS GENERAL SERVICES
Department of General Services
State of California
Real Estate Services Division
Project Management & Development Branch
707 Third Street, Suite 4-105
West Sacramento, California 95605

NICHOLS MELBURG & ROSSETTO
ARCHITECTS + ENGINEERS
300 Knollcrest Drive
Redding, CA. 96002
(530) 222-3300 (530) 222-3538 FAX
http://www.nmrdesign.com

Copyright © 2020
All ideas, designs, arrangements and plans indicated or represented by this drawing are owned by, and the property of, NICHOLS, MELBURG and ROSSETTO and were created, evolved and developed for use on, and in conjunction with, the specified project. None of such ideas, designs, arrangements or plans shall be used by, or disclosed to any person, firm or corporation for any purpose whatsoever without the written permission of NICHOLS, MELBURG and ROSSETTO

LICENSE STAMPS

LICENSED ARCHITECT KYLE MATTHEW MELBURG C-27504 REN. 10/31/21 STATE OF CALIFORNIA

CONSULTANT

DRAWING STATUS
CONSTRUCTION DOCUMENTS

ISSUE

No.	Date	Description
1	10/20/2020	INITIAL PLAN REVIEW
2	01/22/2021	AGENCY RESUBMITTAL
3	03/22/2021	AGENCY RESUBMITTAL

If drawing is not 30" x 42" it is a reduced print

PROJECT
RESIDENTIAL CENTER, UKIAH: REPLACEMENT OF EXISTING RESIDENTIAL CENTER
440 EAST HILL ROAD
WILLITS, CALIFORNIA 95490
MENDOCINO COUNTY
CALIFORNIA CONSERVATION CORPS

Supervisor	Designed	Drawn
KJM	DMH	Author

DSA Application No.
02-118630

SHEET TITLE
MEN'S HOUSING INTERIOR ELEVATIONS

DGS Project Number
000000000001826
NMR Project Number
18-6456

Reference North
Sheet Scale
As indicated
Sheet Number
A500HM

ISSUE DATE
July 9, 2021

Plot Date: 3/10/2021 12:54:47 PM
File Name: BIM 360://CC24 Willits Residential Center/A_CCC-WRC-DORM-MEN.rvt

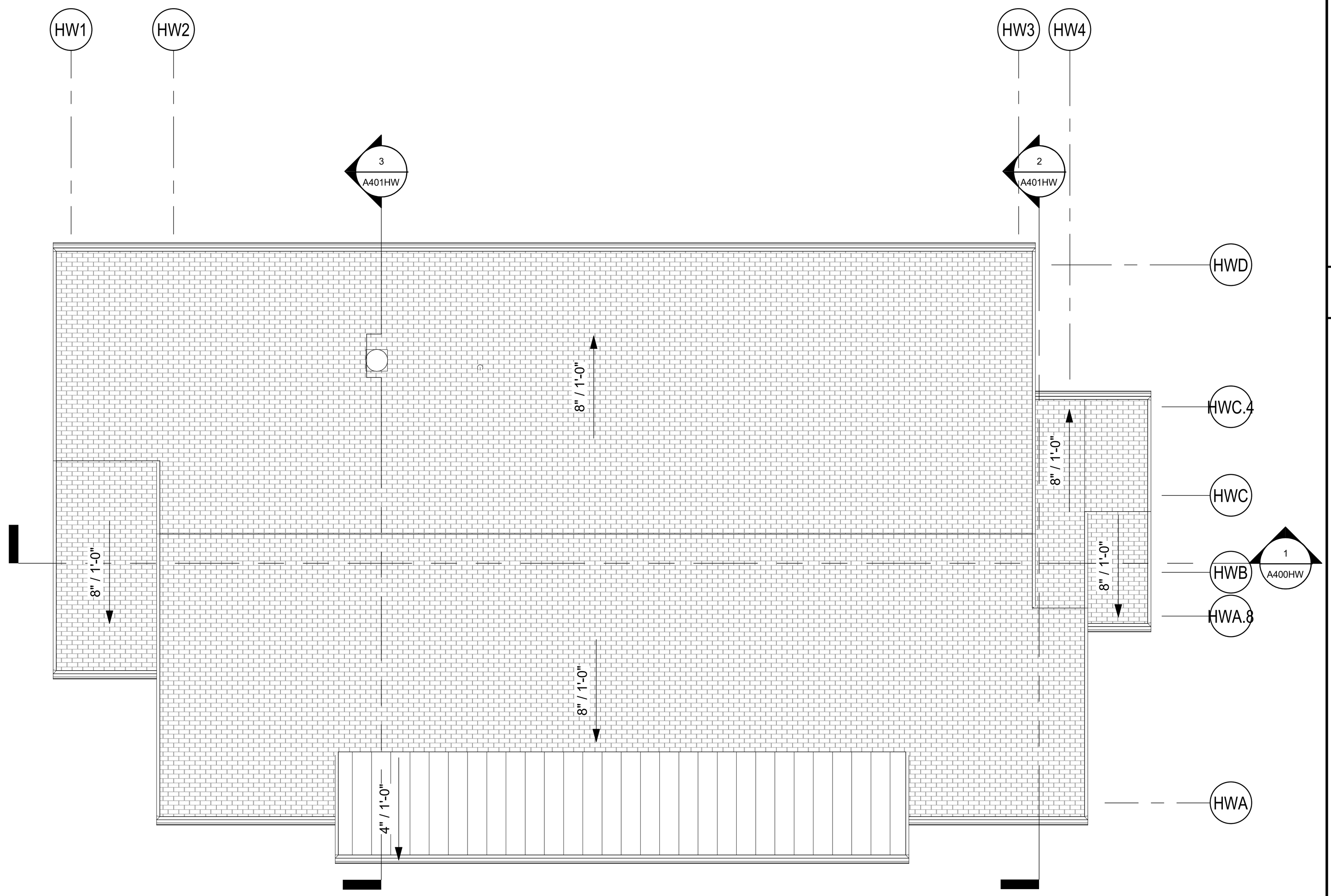

WOMEN'S BUILDING ROOF PLAN

SCALE: 1/8" = 1'-0"

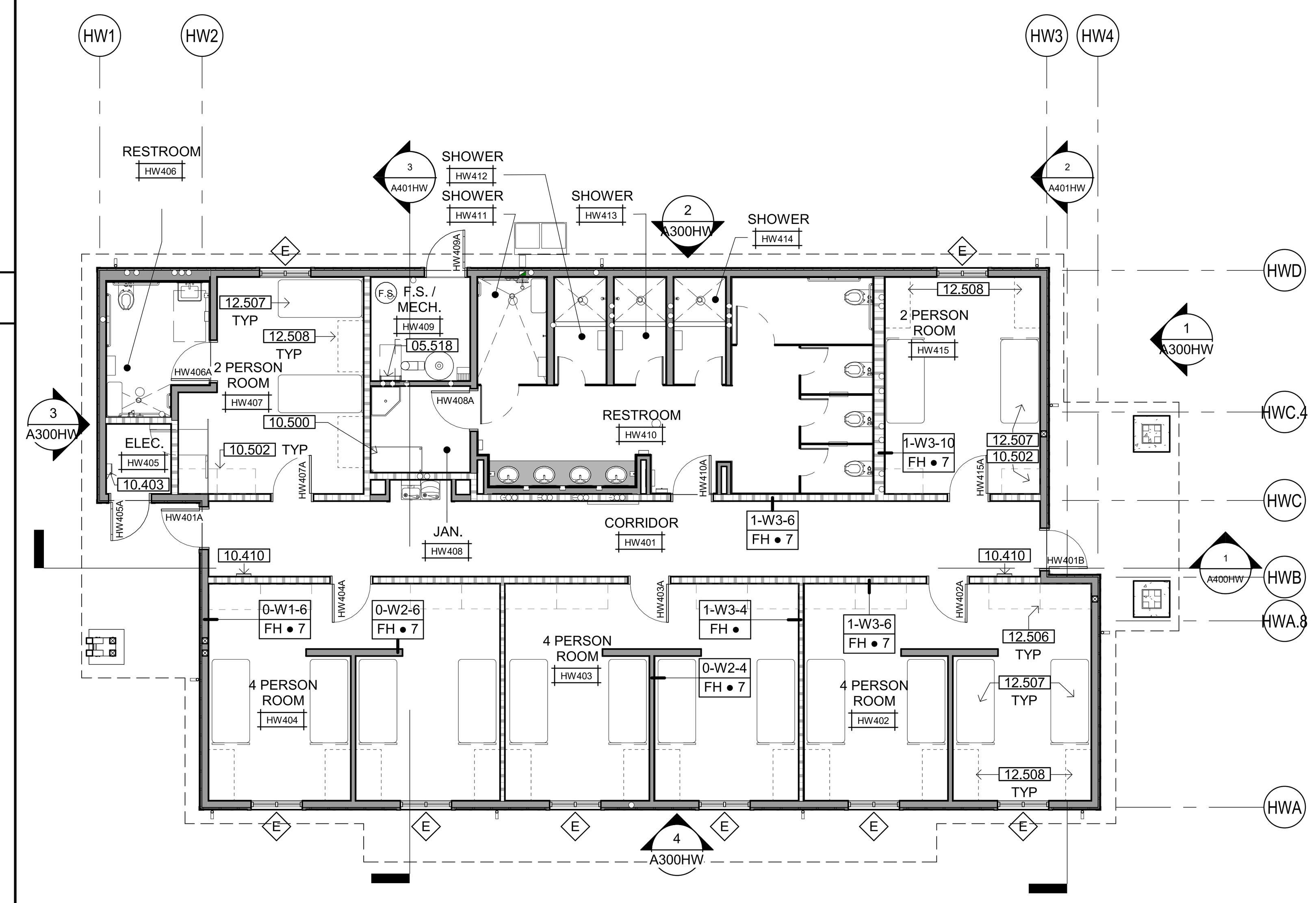

WOMEN'S HOUSING BUILDING 4 SHOWN - BUILDINGS 5 & 6, SIM.

WOMEN'S BUILDING FLOOR PLAN

SCALE: 1/8" = 1'-0"

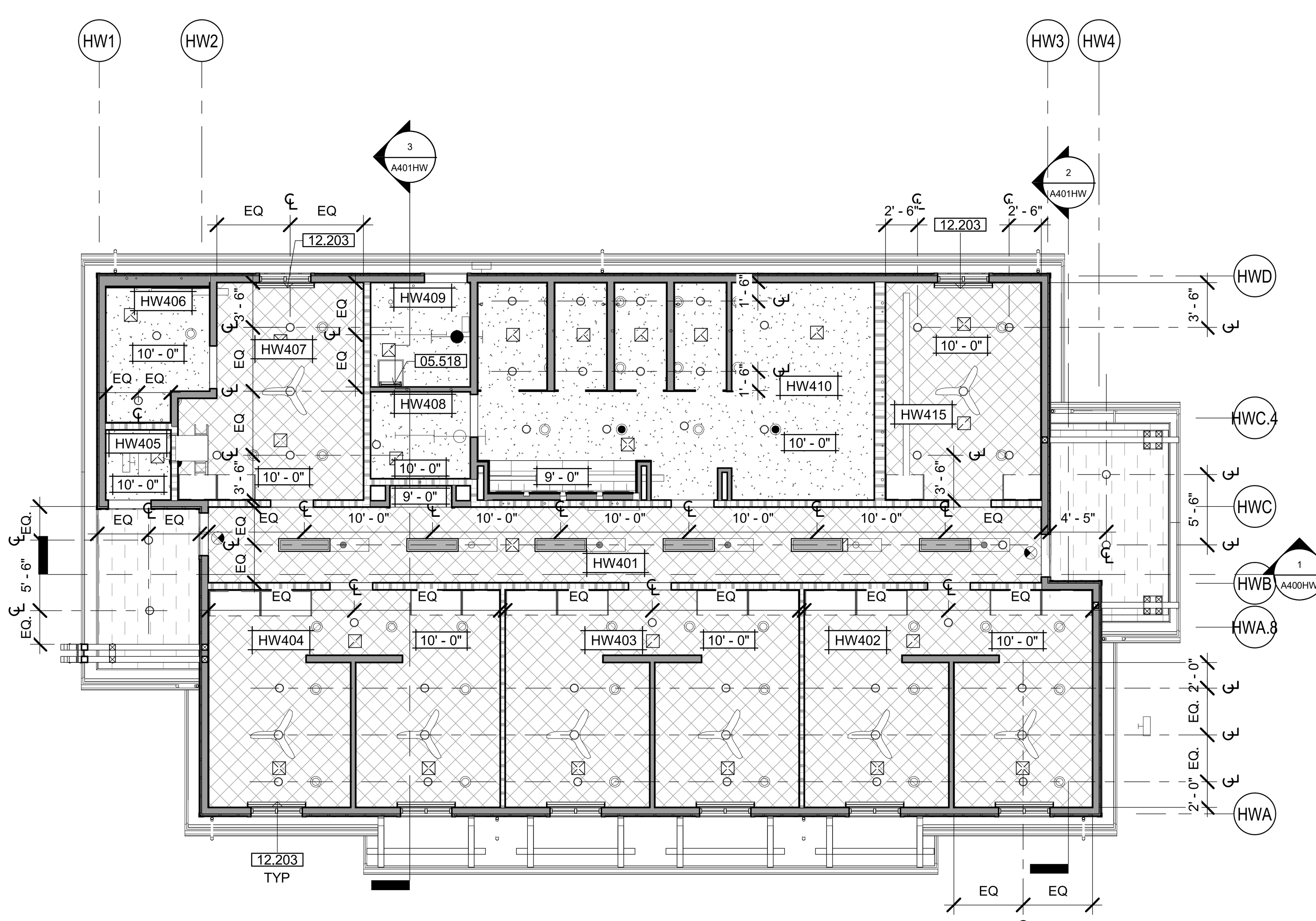

WOMEN'S BUILDING REFLECTED CEILING PLAN

SCALE: 1/8" = 1'-0"

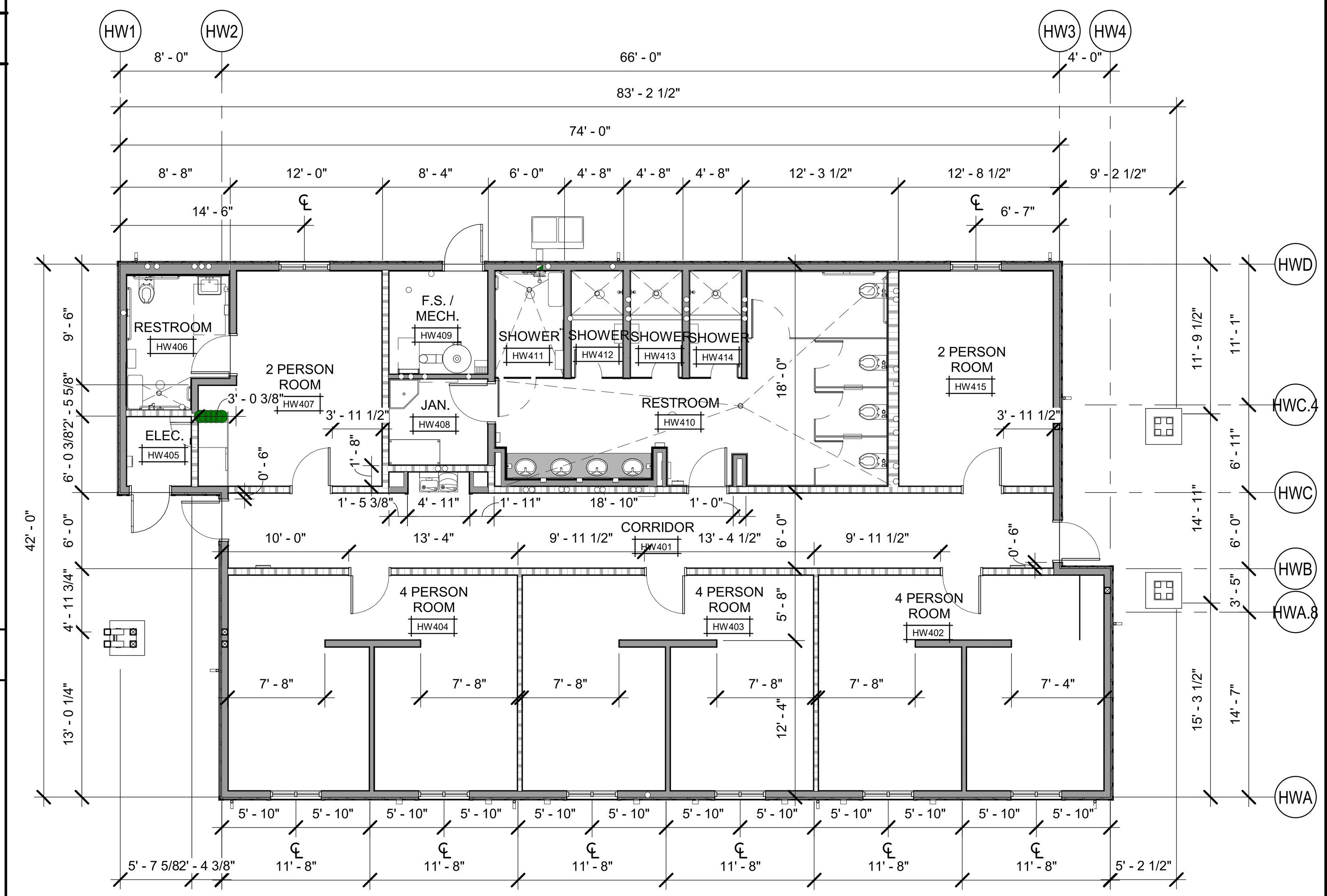

WOMEN'S BUILDING DIMENSION PLAN

SCALE: 1/8" = 1'-0"

ROOF PLAN NOTES

A. ALL PIPE PENETRATIONS NOT SHOWN. SEE MECHANICAL & PLUMBING DRAWINGS FOR LOCATION INFORMATION, SEE ROOF PIPE PENETRATION DETAIL 5/A810.

B. HVAC CONDENSATE DRAIN PIPES NOT SHOWN. SEE MECHANICAL & PLUMBING DRAWINGS FOR REQUIREMENTS.

ROOF PLAN LEGEND

REFER TO DRAWING G120 FOR TYPICAL ROOF CONSTRUCTION ASSEMBLIES

- ASPHALT SHINGLE ROOFING - SEE SHEET A810
- PREFINISHED METAL ROOFING - SEE SHEET A810
- ROOF DRAIN & OVERFLOW

GENERAL RCP NOTES

A. MAINTAIN CEILING HEIGHTS AND LIGHTING LAYOUT PATTERNS SHOWN, UNLESS OTHERWISE APPROVED BY ARCHITECT. CONFLICTS CAUSED BY DUCTWORK, SPRINKLER PIPING, CONDUIT, AND/OR OTHER ITEMS OR FEATURES OF CONSTRUCTION SHALL NOT CONSTITUTE CAUSE FOR VARIANCE FROM CEILING HEIGHTS AND/OR LIGHTING LAYOUTS INDICATED IN THESE DRAWINGS. COORDINATE ALL WORK TO ACHIEVE HEIGHTS AND LAYOUTS AS INDICATED IN THESE DRAWINGS.

B. REFER TO MECHANICAL, FIRE PROTECTION, ELECTRICAL, SECURITY, AND AUDIOVISUAL DRAWINGS FOR ADDITIONAL CONSTRUCTION FEATURES, SYSTEMS, FIXTURES, AND EQPT. LOCATED IN, ON, AND ABOVE CEILINGS. TO THE EXTENT THAT THESE ITEMS ARE SHOWN ON REFLECTED CEILING PLANS, THEY ARE FOR GENERAL INFORMATION AND LAYOUT PURPOSES ONLY, AND DO NOT NECESSARILY REPRESENT ACTUAL SCOPE OR QUANTITIES REQUIRED FOR THE PROJECT. ALL QUANTITIES TO BE VERIFIED.

C. AT ACOUSTICAL TILE CEILINGS, ALL FIXTURES AND EQUIPMENT SHALL BE CENTERED WITHIN ACOUSTICAL CEILING TILES, IN BOTH DIRECTIONS.

D. SPRINKLER HEAD LOCATIONS SHALL RESULT IN A UNIFORM AND REPETITIVE PATTERN FOR EACH AREA, AND SHALL BE LOCATED SYMMETRICALLY WITH RESPECT TO WALLS, CEILING GRID PATTERNS, AND LIGHT FIXTURES. SPRINKLER HEADS IN ACOUSTICAL TILE CEILINGS SHALL BE LOCATED IN THE CENTERS OF THE CEILING TILES.

E. TYP. EXTERIOR SOFFIT HEIGHT IS AT UNDERSIDE OF STRUCTURAL FRAMING U.O.N.

RCP LEGEND

REFER TO DRAWING G120 FOR TYPICAL CEILING CONSTRUCTION ASSEMBLIES

- 5/8" GYPSUM BOARD CEILING (C / 2)
- EXTERIOR FIBER CEMENT SOFFIT, NON-VENTED
- 1-HOUR RATED GYPSUM BOARD CEILING SYSTEM (C / 1)
- +X'-X" INDICATES HEIGHT OF FINISHED CEILING OR SOFFIT (FROM REFERENCE FLOOR ELEVATION)
- 6" DIAMETER RECESSED CAN LIGHT FIXTURE - SEE ELECTRICAL DRAWINGS
- LINEAR LIGHT FIXTURE - SEE ELECTRICAL DRAWINGS
- SUPPLY AIR DIFFUSERS - SEE MECHANICAL DRAWINGS
- RETURN AIR DIFFUSER - SEE MECHANICAL DRAWINGS
- EXHAUST - SEE MECHANICAL DRAWINGS
- DORM ROOM CEILING FAN
- FLOURESCENT TUBE LIGHT
- 1'x4' SURFACE MOUNTED LIGHT

KEYNOTES

05.518	PIVOTAL SHIPS LADDER - SEE DETAIL 3/A931
10.403	SURFACE-MOUNTED FIRE EXTINGUISHER CABINET PER DETAIL 3A/A960
10.410	SEMI-RECESSED 1-HOUR FIRE RATED FIRE EXTINGUISHER CABINET PER DETAIL 1D/A960
10.500	METAL STORAGE SHELVING UNIT
10.502	2-TIER LOCKERS
12.203	DOUBLE ROLL WINDOW SHADE, MANUAL. SEE DETAIL 19/A961
12.506	LOCKERS - OFOI
12.507	BED - OFOI
12.508	DESK - OFOI

GENERAL NOTES

A. FOR WALL ASSEMBLIES REFER TO GENERAL ASSEMBLIES, SHEET G121.
B. UNLESS OTHERWISE INDICATED, INTERIOR STUD FRAMED WALLS SHALL BE TYPE 0-2-6.
C. UNLESS OTHERWISE INDICATED, EXTERIOR STUD FRAMED WALLS SHALL BE TYPE 0-1-6.
D. SEE ENLARGED PLANS FOR WALL TYPES NOT INDICATED ON THIS PLAN.
E. REFER TO DETAIL 4/A961 FOR WALL INTERSECTION PRIORITIES.
F. SEE DOOR SCHEDULE, SHEET A710, FOR ADDITIONAL DOOR INFORMATION AND DIMENSIONS. ALL DOOR RATINGS SHALL MATCH OR EXCEED THE RATING OF THE WALL OR PARTITION IN WHICH THEY ARE INSTALLED.
G. SEE WINDOW SCHEDULE, SHEET A720, FOR ADDITIONAL WINDOW INFORMATION AND DIMENSIONS. ALL WINDOW RATINGS SHALL MATCH OR EXCEED THE RATING OF THE WALL OR PARTITION IN WHICH THEY ARE INSTALLED.
H. REFER TO STRUCTURAL NOTES SHEET S011 AND STRUCTURAL DETAIL SHEET S561 FOR TYPICAL WALL FRAMING DETAILS AND REQUIREMENTS
I. REFER TO SHEET A961 FOR HEAD OF WALL ASSEMBLIES
J. REFER TO FINISH SCHEDULE & INTERIOR ELEVATIONS FOR GYPSUM BOARD TYPE & LOCATIONS
K. ALL DIMENSIONS SHALL TAKE PRECEDENCE OVER SCALE SHOWN ON PLANS, SECTIONS AND DETAILS. DIMENSIONS MISSING FROM THE PLANS, OR NEEDED FOR EXECUTION OF WORK, SHALL BE PROVIDED OR CLARIFIED BY THE ARCHITECT BEFORE THE WORK IS INSTALLED. ERRORS RESULTING IN FAILURE TO COMPLY WITH THIS PROCEDURE SHALL BE CORRECTED BY, AND AT THE SOLE EXPENSE OF, THE CONTRACTOR. DIMENSIONS ARE TO FACE OF STUDS OR SLAB UNLESS NOTED OTHERWISE ON DRAWINGS. DO NOT SCALE DRAWINGS. DIMENSIONS NOTED AS "CLEAR" (CLR) ARE TAKEN TO THE FACE OF FINISH MATERIALS. THE CONTRACTOR SHALL VERIFY DIMENSIONS OF PREFABRICATED AND MANUFACTURED ITEMS AND COORDINATE ROUGH OPENINGS ACCORDINGLY.

1. ALL DIMENSIONS ARE TO FACE OF STUD, CENTERLINE OF COLUMNS, FACE OF CONCRETE
2. FINISH FLOOR DIMENSIONS ARE TO TOP OF CONCRETE OR OTHER HARD SURFACE
3. CEILING HEIGHT DIMENSIONS ARE TO FINISH SURFACES

FLOOR PLAN LEGEND

- DOOR WITH TAG - SEE SCHEDULE, SHEET A710
- WINDOW WITH TAG - SEE SCHEDULE, SHEET A720
- COUNTERTOP OVER CASEWORK - DASHED LINE INDICATES WALL MOUNTED CASEWORK ABOVE - SEE INTERIOR ELEVATIONS
- RECESSED FIRE EXTINGUISHER & CABINET (FEC)
- SINK / LAVATORY - SEE PLUMBING DRAWINGS
- TOILET - SEE PLUMBING DRAWINGS
- URINAL - SEE PLUMBING DRAWINGS
- DRINKING FOUNTAIN - SEE PLUMBING DRAWINGS

WALL TYPES LEGEND

SEE SHEET G121 FOR ASSEMBLY TYPES

EXTERIOR

2 x 6 WOOD STUD WALL - NON RATED	0-W1-6 * • #
2 x 12 WOOD STUD WALL - NON RATED	0-W1-12 * • #

INTERIOR

2 x 4 WOOD STUD WALL - NON RATED	0-W2-4 * • #
2 x 6 WOOD STUD WALL - NON RATED	0-W2-6 * • #
2 x 8 WOOD STUD WALL - NON RATED	0-W2-8 * • #
2 x 12 WOOD STUD WALL - NON RATED	0-W2-12 * • #
2 x 4 WOOD STUD WALL - ACOUSTIC	0-W5-4 * • #
2 x 6 WOOD STUD WALL - ACOUSTIC	0-W5-6 * • #
2 X 4 WOOD STUD WALL - 1-HR FIRE PARTITION W/ PROTECTED OPENINGS	1-W3-4 * • #
2 X 6 WOOD STUD WALL - 1-HR FIRE PARTITION W/ PROTECTED OPENINGS	1-W3-6 * • #

WALL TYPE NOTES

PARTITION SYMBOL

#-#-# / * • #

- FIRE-RESISTIVE RATING
- ASSEMBLY DETAIL NUMBER
- NOMINAL STUD SIZE
- # = SPECIAL CONDITIONS
- * = PARTITION HEIGHT

IDENTIFICATION STAMP
DIV. OF THE STATE ARCHITECT
APP: 02-118630 INC:
REVIEWED FOR
SS ☐ FLS ☐ ACS ☑
DATE: 04/13/2021

OFFICE OF THE STATE FIRE MARSHAL
APPROVED FIRE AND PANIC ONLY
Approval of this plan does not authorize or approve any omission or deviation from applicable regulations. Final approval is subject to field inspection. One set of approved plans shall be available on the project site at all times.
PERMIT NO.: 20-N-2332-CP
REVIEWED BY: LITO CATAYLO, OSFM
DATE: 4/1/2021

GENERAL SERVICES
Department of General Services
State of California
Real Estate Services Division
Project Management & Development Branch
707 Third Street, Suite 4-105
West Sacramento, California 95605

NICHOLS MELBURG & ROSSETTO
ARCHITECTS + ENGINEERS
300 Knollcrest Drive
Redding, CA. 96002
(530) 222-3300 (530) 222-3538 FAX
http://www.nmrdesign.com

Copyright © 2020
All ideas, designs, arrangements and plans indicated or represented by this drawing are owned by, and the property of, NICHOLS, MELBURG and ROSSETTO and were created, evolved and developed for use on, and in conjunction with, the specified project. None of such ideas, designs, arrangements or plans shall be used by, or disclosed to any person, firm or corporation for any purpose whatsoever without the written permission of NICHOLS, MELBURG and ROSSETTO.

LICENSE STAMPS
LICENSED ARCHITECT KYLE MATTI C 27504 REN. 10/31/21 STATE OF CALIFORNIA

CONSULTANT

DRAWING STATUS
CONSTRUCTION DOCUMENTS

ISSUE

No.	Date	Description
1	10/20/2020	INITIAL PLAN REVIEW
2	01/22/2021	AGENCY RESUBMITTAL
3	03/22/2021	AGENCY RESUBMITTAL

If drawing is not 30" x 42" it is a reduced print

PROJECT
RESIDENTIAL CENTER, UKIAH: REPLACEMENT OF EXISTING RESIDENTIAL CENTER
440 EAST HILL ROAD
WILLITS, CALIFORNIA 95490
MENDOCINO COUNTY
CALIFORNIA CONSERVATION CORPS

Supervisor	Designed	Drawn
KJM	DMH	CW

DSA Application No.
02-118630

SHEET TITLE
WOMEN'S HOUSING FLOOR PLAN, DIMENSION PLAN, ROOF PLAN, RCP

DGS Project Number	NMR Project Number
000000000001826	18-6456

Reference North
Sheet Scale: As indicated
Sheet Number: A201HW
ISSUE DATE: July 9, 2021

Plot Date: 3/19/2021 8:52:55 AM
File Name: BIM 360://CCC Willits Residential Center/A_CCC-WRC-DORM-WOMEN.rvt

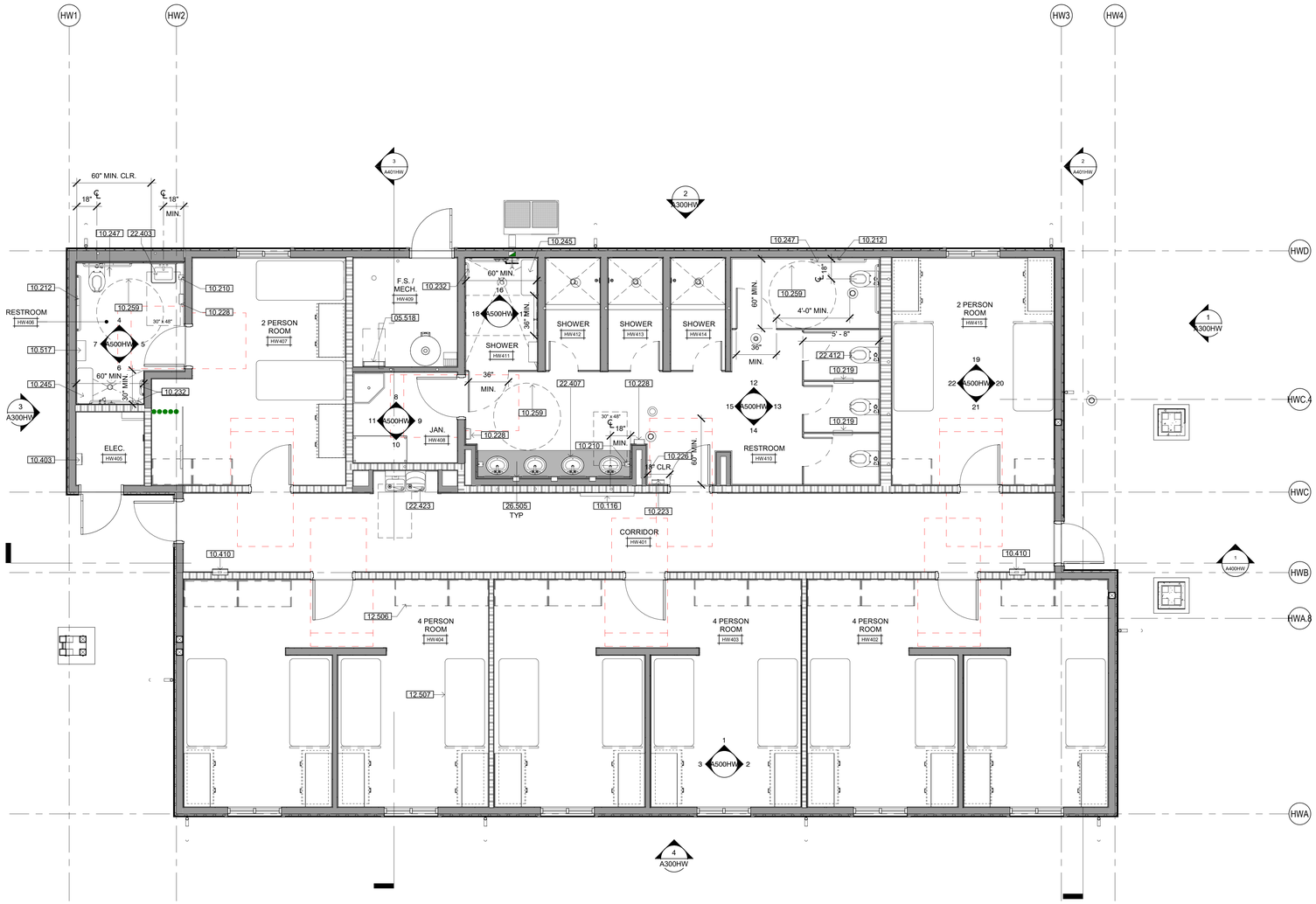

ENLARGED FLOOR PLAN

SCALE: 1/4" = 1'-0"

KEYNOTES

05.518	PIVOTAL SHIPS LADDER - SEE DETAIL 3/A931
10.116	GLASS DISPLAY MESSAGE BOARD
10.210	SOAP DISPENSER
10.212	SEMI-RECESSED TOILET TISSUE DISPENSER
10.219	PARTITION MOUNTED DUAL-SIDED COMBINATION TOILET TISSUE DISPENSER, SEAT COVER DISPENSER AND SANITARY NAPKIN DISPOSAL
10.223	SURFACE MOUNTED PAPER TOWEL DISPENSER
10.226	SEMI-RECESSED COMBINATION PAPER TOWEL DISPENSER AND WASTER RECEPTACLE - MAX 4" PROJECTION
10.228	HAND DRYER
10.232	GRAB BAR - SEE DETAIL 4/A960
10.245	AT ACCESSIBLE SHOWER, PROVIDE: STAINLESS STEEL SHOWER ROD WITH CURTAIN AND S.S. HANGERS, FOLD-DOWN SEAT, 24"/36" CORNER GRAB BARS, RECESSED S.S. SOAP DISH AND 60" LONG FLEXIBLE SHOWER SPRAY HOSE
10.247	GRAB BARS, 48" AT SIDE & 42" AT BACK - SEE DETAIL 4/A960
10.259	60" DIAMETER TURNING RADIUS
10.403	SURFACE-MOUNTED FIRE EXTINGUISHER CABINET PER DETAIL 3A/A960
10.410	SEMI-RECESSED 1-HOUR FIRE RATED FIRE EXTINGUISHER CABINET PER DETAIL 1D/A960
10.517	STAINLESS STEEL SHELF, 4" MAX. PROJECTION
12.506	LOCKERS - OFOI
12.507	BED - OFOI
22.403	LAVATORY - SEE PLUMBING DRAWINGS
22.407	ACCESSIBLE SINK - SEE PLUMBING DRAWINGS
22.412	ACCESSIBLE WALL HUNG TOILET
22.423	ACCESSIBLE DRINKING FOUNTAIN HI-LO WITH BOTTLE FILL-SEE DETAIL 4/G212
26.505	RECESSED LIGHT FIXTURE

IDENTIFICATION STAMP
DIV. OF THE STATE ARCHITECT
APP: 02-118630 INC:
REVIEWED FOR
SS ☐ FLS ☐ ACS ☑
DATE: 04/13/2021

OFFICE OF THE STATE FIRE MARSHAL
APPROVED FIRE AND PANIC ONLY
Approval of this plan does not authorize or approve any omission or deviation from applicable regulations. Final approval is subject to field inspection. One set of approved plans shall be available on the project site at all times.
PERMIT NO. 20-N-2332-CP
REVIEWED BY: LEO CATAYLO, OSFM
DATE: 4 / /2021

DGS GENERAL SERVICES
Department of General Services
State of California
Real Estate Services Division
Project Management & Development Branch
707 Third Street, Suite 4-105
West Sacramento, California 95605

NICHOLS MELBURG & ROSSETTO
ARCHITECTS + ENGINEERS
300 Knollcrest Drive
Redding, CA. 96002
(530) 222-3300 (530) 222-3538 FAX
http://www.nmrdesign.com

Copyright © 2020
All ideas, designs, arrangements and plans indicated or represented by this drawing are owned by, and the property of, NICHOLS, MELBURG and ROSSETTO and were created, evolved and developed for use on, and in conjunction with, the specified project. None of such ideas, designs, arrangements or plans shall be used by, or disclosed to any person, firm or corporation for any purpose whatsoever without the written permission of NICHOLS, MELBURG and ROSSETTO

LICENSE STAMPS

LICENSED ARCHITECT KYLE MATTHEW MELBURG 21504 REN. 10/31/21 STATE OF CALIFORNIA

CONSULTANT

DRAWING STATUS
CONSTRUCTION DOCUMENTS

ISSUE

No.	Date	Description
1	10/20/2020	INITIAL PLAN REVIEW
2	01/22/2021	AGENCY RESUBMITTAL
3	03/22/2021	AGENCY RESUBMITTAL

If drawing is not 30" x 42" it is a reduced print

PROJECT
RESIDENTIAL CENTER, UKIAH: REPLACEMENT OF EXISTING RESIDENTIAL CENTER
440 EAST HILL ROAD
WILLITS, CALIFORNIA 95490
MENDOCINO COUNTY
CALIFORNIA CONSERVATION CORPS

Supervisor	Designed	Drawn
KJM	DMH	Author

DSA Application No.
02-118630

SHEET TITLE
WOMEN'S HOUSING ENLARGED FLOOR PLAN

DGS Project Number	NMR Project Number
000000000001826	18-6456

Reference North: NORTH
Sheet Scale: 1/4" = 1'-0"
Sheet Number: A220HW

ISSUE DATE
July 9, 2021

Plot Date: 3/19/2021 8:52:56 AM
File Name: BIM 360://CCC-Willits Residential Center/A_CCC-WRC-DORM-WOMEN.rvt

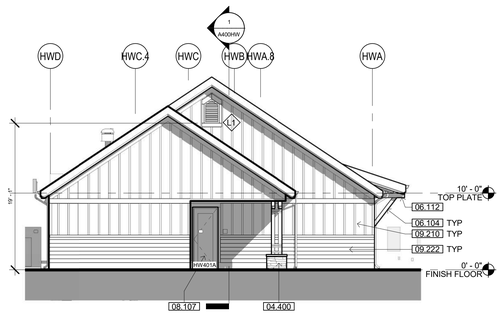

3 WEST ELEVATION

SCALE: 1/8" = 1'-0"

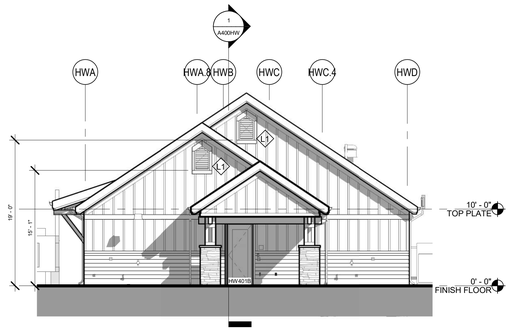

1 EAST ELEVATION

SCALE: 1/8" = 1'-0"

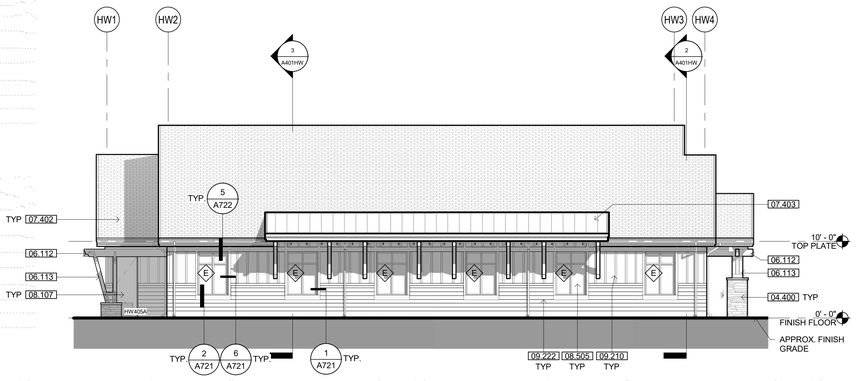

4 SOUTH ELEVATION

SCALE: 1/8" = 1'-0"

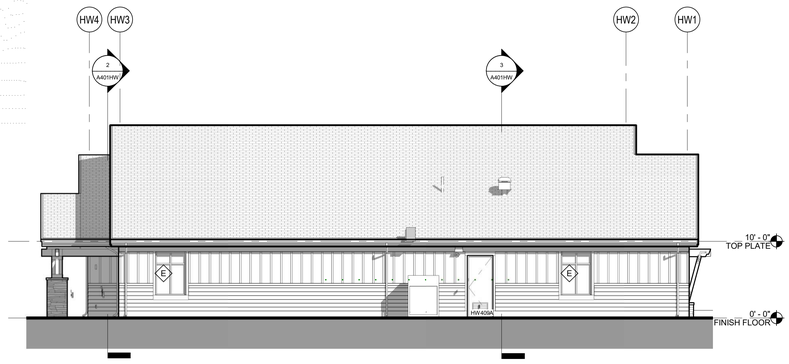

2 NORTH ELEVATION

SCALE: 1/8" = 1'-0"

KEYNOTES

04.400	ADHERED STONE VENEER WAINSCOT
06.104	HEAVY TIMBER KNEE BRACE, PAINTED
06.112	HEAVY TIMBER BEAM, PAINTED
06.113	HEAVY TIMBER COLUMN, PAINTED
07.402	COMPOSITION SHINGLE ROOFING
07.403	STANDING SEAM METAL ROOF SYSTEM, FACTORY PRE-FINISHED
08.107	INSULATED METAL DOOR IN HOLLOW METAL FRAME, PAINTED
08.505	DUAL-GLAZED VINYL WINDOWS
09.210	FIBER CEMENT BATTENS O/ FIBER CEMENT SIDING PANELS O/ RIGID INSULATION
09.222	FIBER CEMENT LAP SIDING SYSTEM O/ RIGID INSULATION

EXTERIOR ELEV. LEGEND

B##X — DOOR TAG - SEE SCHEDULE, SHEET A710

X — WINDOW TAG - SEE SCHEDULE, SHEET A720

IDENTIFICATION STAMP
DIV. OF THE STATE ARCHITECT
APP: 02-118630 INC:
REVIEWED FOR
SS ☐ FLS ☐ ACS ☑
DATE: 04/13/2021

OFFICE OF THE STATE FIRE MARSHAL
APPROVED FIRE AND PANIC ONLY
Approval of this plan does not authorize or approve any omission or deviation from applicable regulations. Final approval is subject to field inspection. One set of approved plans shall be available on the project site at all times.
PERMIT NO. 20 N 2332 CP
REVIEWED BY: LEO CATAYLO, OSFM
DATE: 4 / /2021

DGS GENERAL SERVICES
Department of General Services
State of California
Real Estate Services Division
Project Management & Development Branch
707 Third Street, Suite 4-105
West Sacramento, California 95605

NICHOLS MELBURG & ROSSETTO
ARCHITECTS + ENGINEERS
300 Knollcrest Drive
Redding, CA. 96002
(530) 222-3300 (530) 222-3538 FAX
http://www.nmrdesign.com

Copyright © 2020
All ideas, designs, arrangements and plans indicated or represented by this drawing are owned by, and the property of, NICHOLS, MELBURG and ROSSETTO and were created, evolved and developed for use on, and in conjunction with, the specified project. None of such ideas, designs, arrangements or plans shall be used by, or disclosed to any person, firm or corporation for any purpose whatsoever without the written permission of NICHOLS, MELBURG and ROSSETTO.

LICENSE STAMPS

LICENSED ARCHITECT KYLE MATTY C-27504 REN. 10/31/21 STATE OF CALIFORNIA

CONSULTANT

DRAWING STATUS
CONSTRUCTION DOCUMENTS

ISSUE

No.	Date	Description
1	10/20/2020	INITIAL PLAN REVIEW
2	01/22/2021	AGENCY RESUBMITTAL
3	03/22/2021	AGENCY RESUBMITTAL

If drawing is not 30" x 42" it is a reduced print

PROJECT
RESIDENTIAL CENTER, UKIAH: REPLACEMENT OF EXISTING RESIDENTIAL CENTER
440 EAST HILL ROAD
WILLITS, CALIFORNIA 95490
MENDOCINO COUNTY
CALIFORNIA CONSERVATION CORPS

Supervisor	Designed	Drawn
KJM	DMH	Author

DSA Application No.
02-118630

SHEET TITLE
WOMEN'S HOUSING EXTERIOR ELEVATIONS

DGS Project Number: 000000000001826
NMR Project Number: 18-6456

Reference North: NORTH
Sheet Scale: 1/8" = 1'-0"
Sheet Number: A300HW

ISSUE DATE
July 9, 2021

Plot Date: 5/19/2021 8:53:56 AM
File Name: BIM 360://CCC-Willits Residential Center/A_CCC-WRC-DORM-WOMEN.rvt

KEYNOTES

03.302	CONCRETE SLAB, SEE STRUCTURAL DRAWINGS
03.303	CONCRETE FOOTING, SEE STRUCTURAL DRAWINGS
03.305	CONCRETE WALKWAY SLOPED 1.5% AWAY FROM BUILDING
04.400	ADHERED STONE VENEER WAINSCOT
06.109	WOOD FRAMED TRUSS
06.113	HEAVY TIMBER COLUMN, PAINTED
07.202	RIGID INSULATION
07.203	BATT INSULATION
07.402	COMPOSITION SHINGLE ROOFING
08.103	HOLLOW METAL DOOR & FRAME-SEE DOOR SCHEDULE
09.210	FIBER CEMENT BATTENS O/ FIBER CEMENT SIDING PANELS O/ RIGID INSULATION
09.218	GYPSUM BOARD CEILING ATTACHED TO BOTTOM CORD OF ROOF TRUSS
09.220	GYPSUM BOARD SOFFIT
09.222	FIBER CEMENT LAP SIDING SYSTEM O/ RIGID INSULATION
09.600	BASE-SEE FINISH SCHEDULE
10.116	GLASS DISPLAY MESSAGE BOARD
22.423	ACCESSIBLE DRINKING FOUNTAIN HI-LO WITH BOTTLE FILL-SEE DETAIL 4/G212

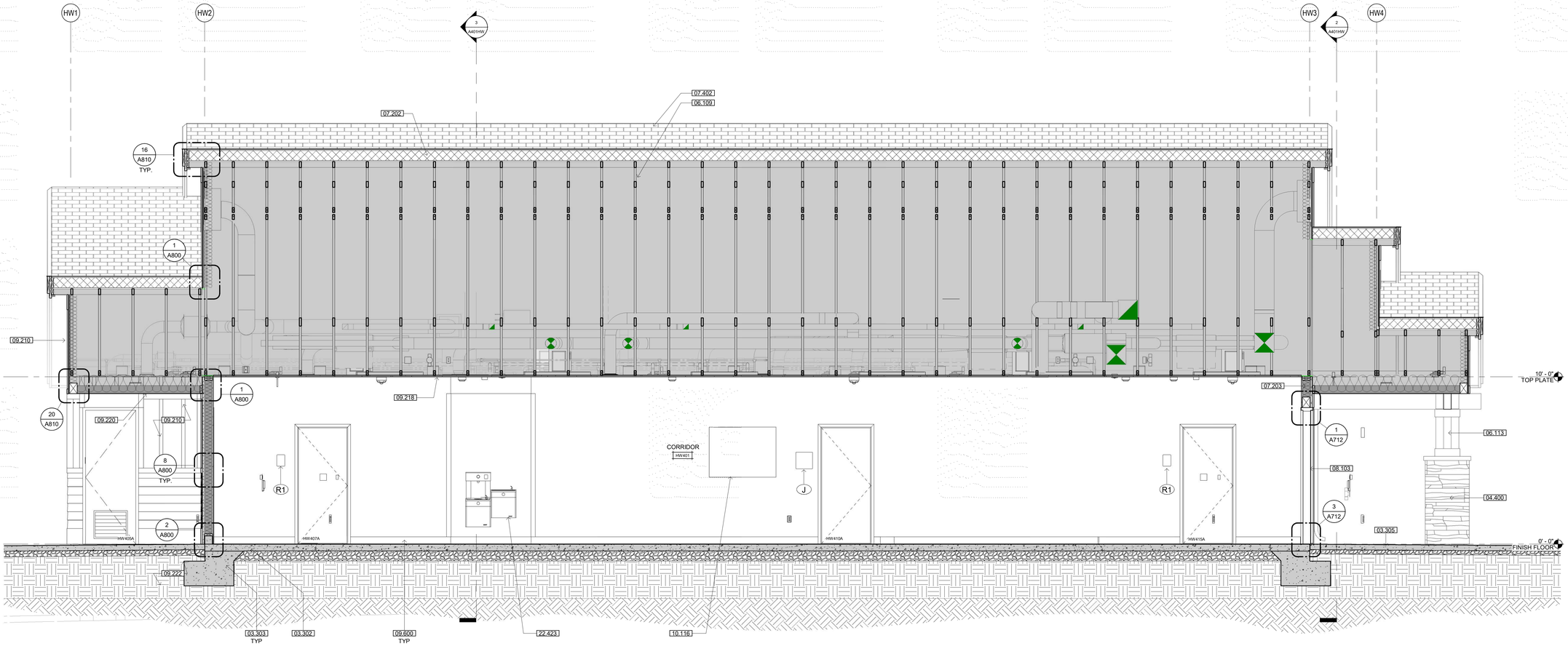

1 BUILDING SECTION

SCALE: 3/8" = 1'-0"

IDENTIFICATION STAMP
DIV. OF THE STATE ARCHITECT
APP: 02-118630 INC:
REVIEWED FOR
SS ☐ FLS ☐ ACS ☑
DATE: 04/13/2021

OFFICE OF THE STATE FIRE MARSHAL
APPROVED FIRE AND PANIC ONLY
Approval of this plan does not authorize or approve any omission or deviation from applicable regulations. Final approval is subject to field inspection. One set of approved plans shall be available on the project site at all times.
PERMIT NO. 20 N 2332-CP
REVIEWED BY: LEO CATAYLO, OSFM
DATE: 4 / /2021

DGS GENERAL SERVICES
Department of General Services
State of California
Real Estate Services Division
Project Management & Development Branch
707 Third Street, Suite 4-105
West Sacramento, California 95605

NICHOLS MELBURG & ROSSETTO
ARCHITECTS + ENGINEERS
300 Knollcrest Drive
Redding, CA. 96002
(530) 222-3300 (530) 222-3538 FAX
http://www.nmrdesign.com

Copyright © 2020
All ideas, designs, arrangements and plans indicated or represented by this drawing are owned by, and the property of, NICHOLS, MELBURG and ROSSETTO and were created, evolved and developed for use on, and in conjunction with, the specified project. None of such ideas, designs, arrangements or plans shall be used by, or disclosed to any person, firm or corporation for any purpose whatsoever without the written permission of NICHOLS, MELBURG and ROSSETTO

LICENSE STAMPS

LICENSED ARCHITECT · KYLE MATTHEW TAYLOR · C-32504 · REN. 10/31/21 · STATE OF CALIFORNIA

CONSULTANT

DRAWING STATUS
CONSTRUCTION DOCUMENTS

ISSUE

No.	Date	Description
1	10/20/2020	INITIAL PLAN REVIEW
2	01/22/2021	AGENCY RESUBMITTAL
3	03/22/2021	AGENCY RESUBMITTAL

If drawing is not 30" x 42" it is a reduced print

PROJECT
RESIDENTIAL CENTER, UKIAH: REPLACEMENT OF EXISTING RESIDENTIAL CENTER
440 EAST HILL ROAD
WILLITS, CALIFORNIA 95490
MENDOCINO COUNTY
CALIFORNIA CONSERVATION CORPS

Supervisor	Designed	Drawn
KJM	DMH	Author

DSA Application No.
02-118630

SHEET TITLE
WOMEN'S HOUSING BUILDING SECTIONS

DGS Project Number: 00000000001826
NMR Project Number: 18-6456

Reference North: NORTH
Sheet Scale: 3/8" = 1'-0"
Sheet Number: A400HW

ISSUE DATE
July 9, 2021

Plot Date: 5/19/2021 8:54:57 AM
File Name: 3184 300 ICC-Willits Residential Center/A_CCC-WRC-DORM-WOMEN.rvt

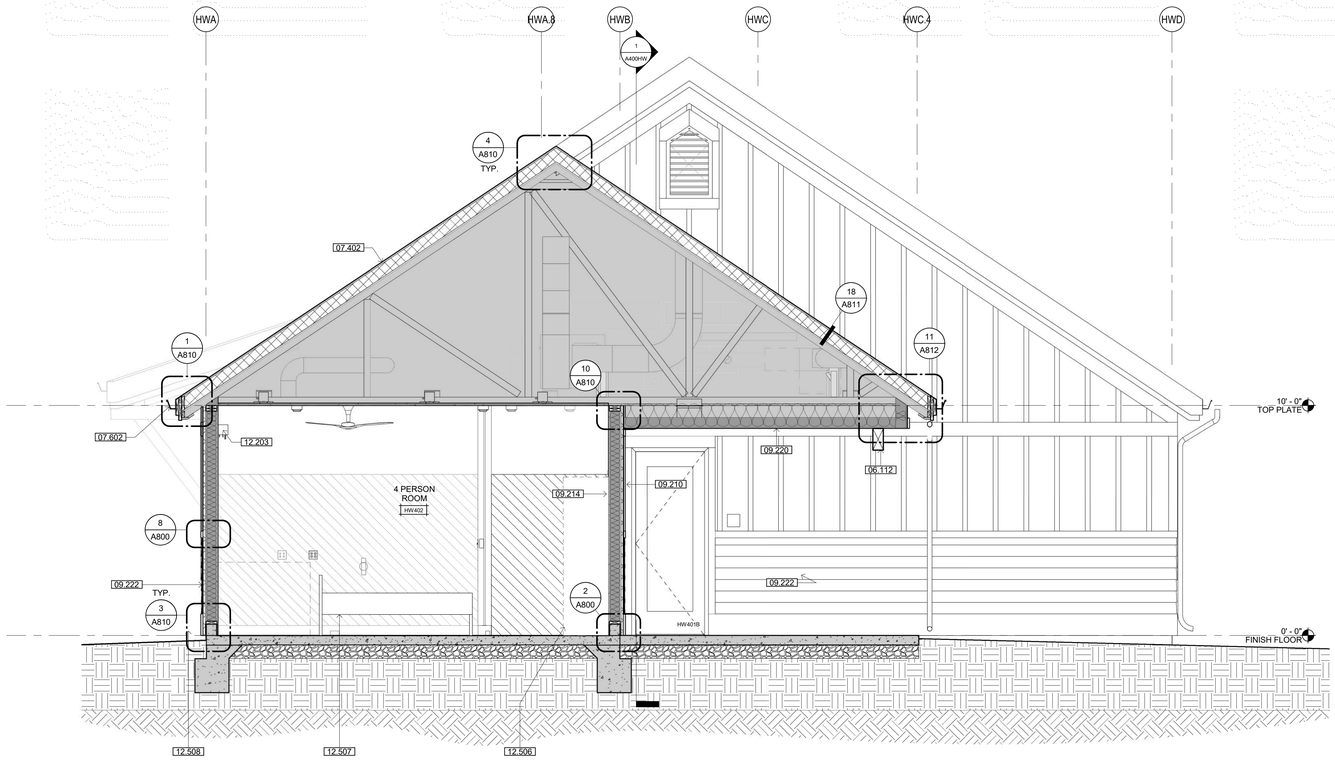

2 BUILDING SECTION

SCALE: 3/8" = 1'-0"

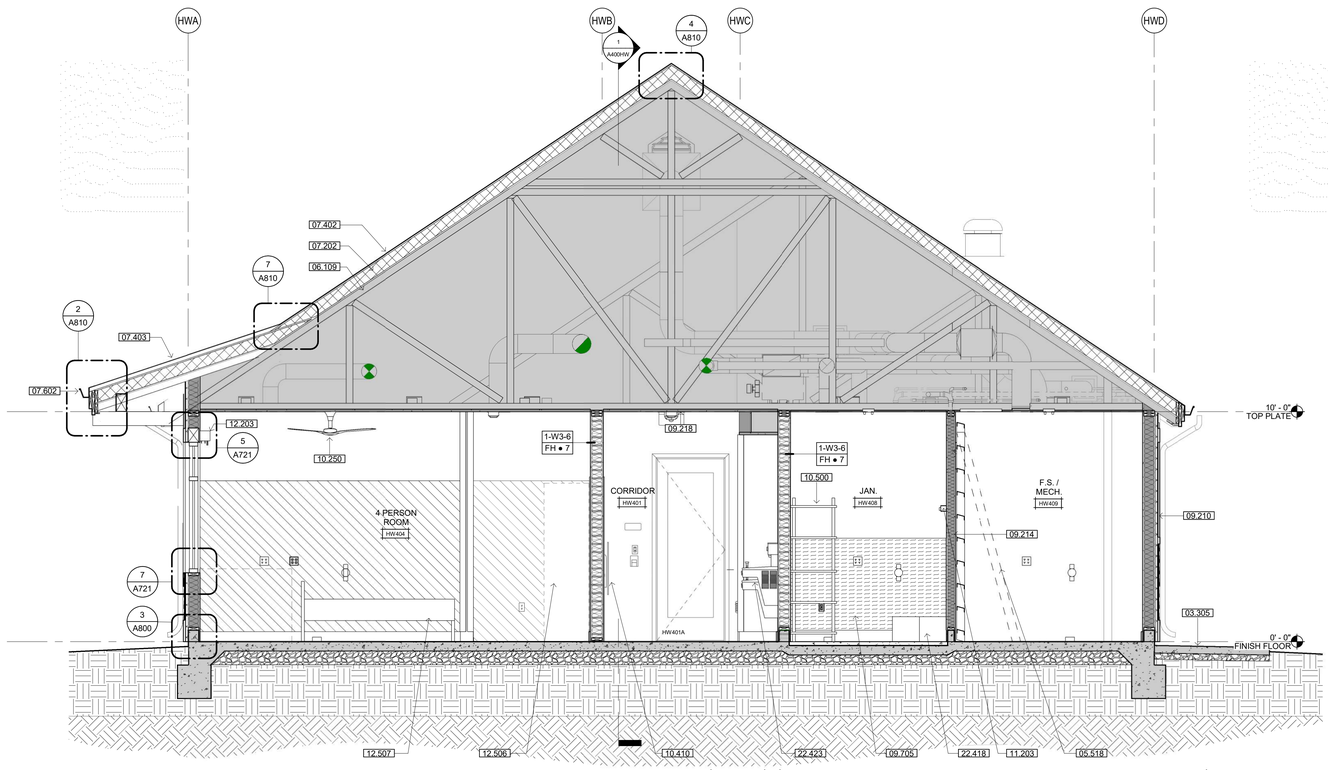

3 BUILDING SECTION

SCALE: 3/8" = 1'-0"

KEYNOTES

03.305	CONCRETE WALKWAY SLOPED 1.5% AWAY FROM BUILDING
05.518	PIVOTAL SHIPS LADDER - SEE DETAIL 3/A931
06.109	WOOD FRAMED TRUSS
06.112	HEAVY TIMBER BEAM, PAINTED
07.202	RIGID INSULATION
07.402	COMPOSITION SHINGLE ROOFING
07.403	STANDING SEAM METAL ROOF SYSTEM, FACTORY PRE-FINISHED
07.602	PRE-FINISHED METAL GUTTER
09.210	FIBER CEMENT BATTENS O/ FIBER CEMENT SIDING PANELS O/ RIGID INSULATION
09.214	GYPSUM BOARD, TYP.
09.218	GYPSUM BOARD CEILING ATTACHED TO BOTTOM CORD OF ROOF TRUSS
09.220	GYPSUM BOARD SOFFIT
09.222	FIBER CEMENT LAP SIDING SYSTEM O/ RIGID INSULATION
09.705	FRP PANEL-SEE FINISH SCHEDULE
10.250	CEILING FAN
10.410	SEMI-RECESSED 1-HOUR FIRE RATED FIRE EXTINGUISHER CABINET PER DETAIL 1D/A960
10.500	METAL STORAGE SHELVING UNIT
11.203	COMBINATION UTILITY SHELF WITH MOP AND BROOM HOLDER
12.203	DOUBLE ROLL WINDOW SHADE, MANUAL. SEE DETAIL 19/A961
12.506	LOCKERS - OFOI
12.507	BED - OFOI
12.508	DESK - OFOI
22.418	JANITOR SINK-SEE PLUMBING DRAWINGS
22.423	ACCESSIBLE DRINKING FOUNTAIN HI-LO WITH BOTTLE FILL-SEE DETAIL 4/G212

IDENTIFICATION STAMP
DIV. OF THE STATE ARCHITECT
APP: 02-118630 INC:
REVIEWED FOR
SS ☐ FLS ☐ ACS ☑
DATE: 04/13/2021

OFFICE OF THE STATE FIRE MARSHAL
APPROVED FIRE AND PANIC ONLY
Approval of this plan does not authorize or approve any omission or deviation from applicable regulations. Final approval is subject to field inspection. One set of approved plans shall be available on the project site at all times.
PERMIT NO. 20-N-2332-CP
REVIEWED BY: LEO CATAYLO, OSFM
DATE: 4 / /2021

DGS GENERAL SERVICES
Department of General Services
State of California
Real Estate Services Division
Project Management & Development Branch
707 Third Street, Suite 4-105
West Sacramento, California 95605

NICHOLS MELBURG & ROSSETTO ARCHITECTS + ENGINEERS
300 Knollcrest Drive
Redding, CA. 96002
(530) 222-3300 (530) 222-3538 FAX
http://www.nmrdesign.com

Copyright © 2020
All ideas, designs, arrangements and plans indicated or represented by this drawing are owned by, and the property of, NICHOLS, MELBURG and ROSSETTO and were created, evolved and developed for use on, and in conjunction with, the specified project. None of such ideas, designs, arrangements or plans shall be used by, or disclosed to any person, firm or corporation for any purpose whatsoever without the written permission of NICHOLS, MELBURG and ROSSETTO.

LICENSE STAMPS

LICENSED ARCHITECT KYLE MAY C-31504 REN. 10/31/21 STATE OF CALIFORNIA

CONSULTANT

DRAWING STATUS
CONSTRUCTION DOCUMENTS

ISSUE

No.	Date	Description
1	10/20/2020	INITIAL PLAN REVIEW
2	01/22/2021	AGENCY RESUBMITTAL
3	03/22/2021	AGENCY RESUBMITTAL

If drawing is not 30" x 42" it is a reduced print

PROJECT
RESIDENTIAL CENTER, UKIAH: REPLACEMENT OF EXISTING RESIDENTIAL CENTER
440 EAST HILL ROAD
WILLITS, CALIFORNIA 95490
MENDOCINO COUNTY
CALIFORNIA CONSERVATION CORPS

Supervisor	Designed	Drawn
KJM	DMH	Author

DSA Application No.
02-118630

SHEET TITLE
WOMEN'S HOUSING BUILDING SECTIONS

DGS Project Number	NMR Project Number
000000000001826	18-6456

Reference North | Sheet Scale 3/8" = 1'-0" | Sheet Number A401HW

ISSUE DATE
July 9, 2021

Plot Date: 3/19/2021 8:55:56 AM
File Name: BIM 360://CCC-Willits Residential Center/A_CCC-WRC-DORM-WOMEN.rvt

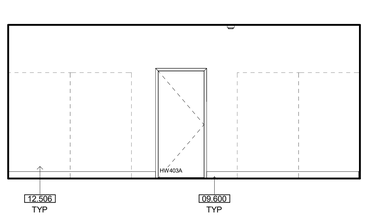

1 HW103 4 PERSON ROOM - NORTH
1/4" = 1'-0"

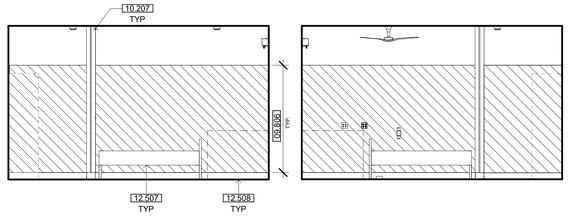

2 HW103 4 PERSON ROOM - EAST
1/4" = 1'-0"

3 HW103 4 PERSON ROOM - WEST
1/4" = 1'-0"

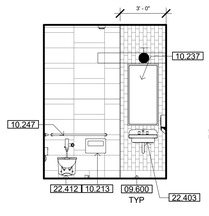

4 HW106 RESTROOM - NORTH
1/4" = 1'-0"

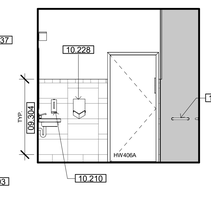

5 HW106 RESTROOM - EAST
1/4" = 1'-0"

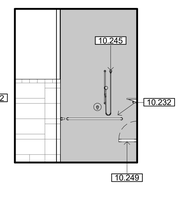

6 HW106 RESTROOM - SOUTH
1/4" = 1'-0"

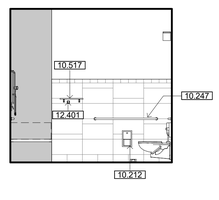

7 HW106 RESTROOM - WEST
1/4" = 1'-0"

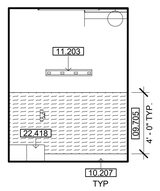

8 HW108 JANITOR - NORTH
1/4" = 1'-0"

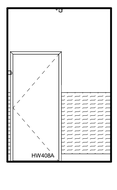

9 HW108 JANITOR - EAST
1/4" = 1'-0"

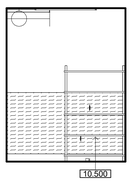

10 HW108 JANITOR - SOUTH
1/4" = 1'-0"

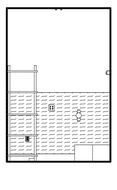

11 HW108 JANITOR - WEST
1/4" = 1'-0"

12 HW110 RESTROOM - NORTH
1/4" = 1'-0"

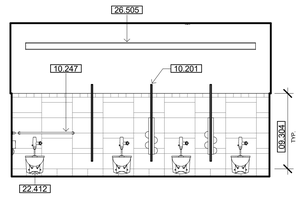

13 HW110 RESTROOM - EAST
1/4" = 1'-0"

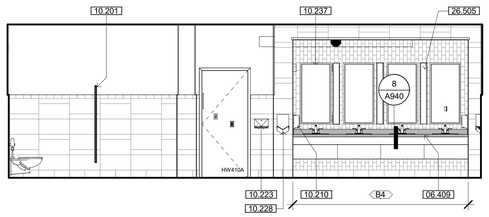

14 HW110 RESTROOM - SOUTH
1/4" = 1'-0"

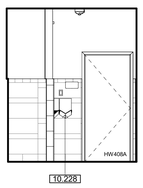

15 HW110 RESTROOM - WEST
1/4" = 1'-0"

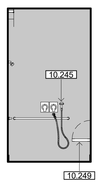

16 HW111 SHOWER - NORTH
1/4" = 1'-0"

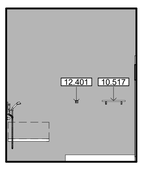

17 HW111 SHOWER - EAST
1/4" = 1'-0"

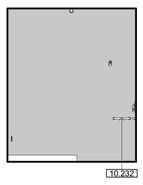

18 HW111 SHOWER - WEST
1/4" = 1'-0"

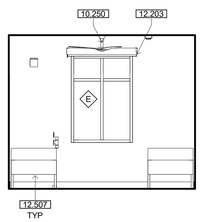

19 HW115 2 PERSON ROOM - NORTH
1/4" = 1'-0"

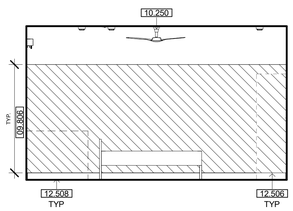

20 HW115 2 PERSON ROOM - EAST
1/4" = 1'-0"

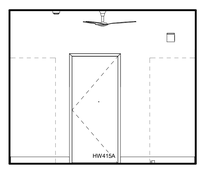

21 HW115 2 PERSON ROOM - SOUTH
1/4" = 1'-0"

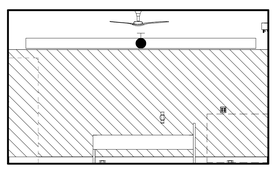

22 HW115 2 PERSON ROOM - WEST
1/4" = 1'-0"

KEYNOTES

06.409	PLASTIC LAMINATE COUNTERTOP
09.304	TILE WAINSCOT-SEE FINISH SCHEDULE
09.600	BASE-SEE FINISH SCHEDULE
09.705	FRP PANEL-SEE FINISH SCHEDULE
09.806	ACOUSTICAL WALL TILE
10.201	TOILET COMPARTMENT - OVERHEAD BRACE - SEE 8/A960
10.207	CORNER GUARD - SEE FINISH SCHEDULE
10.210	SOAP DISPENSER
10.212	SEMI-RECESSED TOILET TISSUE DISPENSER
10.213	SURFACE MOUNTED TOILET SEAT COVER DISPENSER
10.223	SURFACE MOUNTED PAPER TOWEL DISPENSER
10.228	HAND DRYER
10.232	GRAB BAR - SEE DETAIL 4/A960
10.237	24"W X 48"H MIRROR
10.245	AT ACCESSIBLE SHOWER, PROVIDE: STAINLESS STEEL SHOWER ROD WITH CURTAIN AND S.S. HANGERS, FOLD-DOWN SEAT, 24"/36" CORNER GRAB BARS, RECESSED S.S. SOAP DISH AND 60" LONG FLEXIBLE SHOWER SPRAY HOSE
10.247	GRAB BARS, 48" AT SIDE & 42" AT BACK - SEE DETAIL 4/A960
10.249	FOLD DOWN SHOWER SEAT
10.250	CEILING FAN
10.500	METAL STORAGE SHELVING UNIT
10.517	STAINLESS STEEL SHELF, 4" MAX. PROJECTION
11.203	COMBINATION UTILITY SHELF WITH MOP AND BROOM HOLDER
12.203	DOUBLE ROLL WINDOW SHADE, MANUAL. SEE DETAIL 19/A961
12.401	TOWEL HOOK
12.506	LOCKERS - OFOI
12.507	BED - OFOI
12.508	DESK - OFOI
22.403	LAVATORY - SEE PLUMBING DRAWINGS
22.412	ACCESSIBLE WALL HUNG TOILET
22.418	JANITOR SINK-SEE PLUMBING DRAWINGS
26.505	RECESSED LIGHT FIXTURE

INTERIOR ELEV. LEGEND

###X	CASEWORK TAG - SEE SHEET A940
X	SIGNAGE TAG - SEE SHEET A965
B##X	DOOR TAG - SEE SCHEDULE, SHEET A710
X	WINDOW TAG - SEE SCHEDULE, SHEET A720
	GYPSUM BOARD - PAINT
	WALL TILE WT-1/2 OVER CEMENTITIOUS BACKER BOARD
	WALL TILE WT-3 OVER CEMENTITIOUS BACKER BOARD
	SOLID SURFACE MATERIAL OVER CEMENTITIOUS BACKER BOARD
	FIBER REINFORCED PLASTIC (FRP) WALL PROTECTION OVER GYPSUM BOARD
	ACOUSTIC WALL PANELS AWP-2 OVER GYPSUM BOARD

INTERIOR ELEV. GEN. NOTES

A. GENERAL CONTRACTOR TO PROVIDE STRUCTURAL SUPPORT, BACKING AND/OR METAL REINFORCEMENT IN STUD WALLS AT ALL CASEWORK, CABINETS, SHELVING, EQUIPMENT ETC. REFER TO G212 & G213 FOR TYPICAL MOUNTING HEIGHTS AND ARRANGEMENTS OF COMMON SPECIALTY ITEMS INCLUDING SHOWERS AND TOILET ROOMS.

B. SEE SHEET 18/A960 FOR TYP. ACCESSORY MOUNTING

C. SEE MECHANICAL, ELECTRICAL & LOW VOLTAGE DRAWINGS FOR EXTENT AND LOCATION OF ADDITIONAL WALL MOUNTED ITEMS SUCH AS CARD READERS, THERMOSTATS, SWITCHES, OUTLETS, CLOCKS, NURSECALL LIGHTS, FIRE ALARM, ETC. LOCATE ALL OUTLETS, SWITCHES, EQUIP., RECEPTACLE BOXES & OTHER SIMILAR RELATED ITEMS FOR OWNER'S FINAL APPROVAL PRIOR TO CONDUIT/PIPE INSTALLATION.

D. CONTRACTOR TO COORDINATE LOCATION OF CONTRACTOR OR OWNER FURNISHED ITEMS.

E. REFER TO FINISH SCHEDULE AND SPECIFICATIONS FOR SPECIFIC FINISH MATERIAL.

F. ALL VERTICAL DIMENSIONS ARE FROM FINISHED FLOOR, U.N.O.

G. ALL RECESSED SPECIALTIES SHOWN ON ELEVATIONS THAT ARE LOCATED IN FIRE RATED WALLS ARE TO BE 5-SIDED WITH 5/8" TYPE 'X' GYPBOARD SIMILAR TO 3/A961

H. WHERE OUTLETS, MONITORS AND LIGHT SWITCHES ARE NOT DIMENSIONED AT A GIVEN ELEVATION, CAN BE ASSUMED TO BE SIMILAR TO THE ONE ON THE ELEVATION THAT IS DIMENSIONED. WHERE OUTLETS ARE DIMENSIONED ON AN ELEVATION THE TYPICAL FRAMING MUST BE ALTERED AND/OR STUDS HEADED OFF TO ACCOMMODATE DIMENSIONED LOCATIONS AND SHOWN.

I. ALL WALL SURFACES IN NEED OF REPAIR SHALL BE FILLED, SPACKLED AND TEXTURED TO MATCH THE EXISTING WALLS. FINISH AS SPECIFIED.

BUILT-IN CASEWORK NOTES

AA. PROVIDE BACKSPLASH AND ENDSPLASH OF MATERIAL MATCHING COUNTERTOP ON ALL COUNTERTOPS U.O.N. BACKSPLASH TO RETURN AT CABINET ENDS - SEE DETAIL OR NOTES FOR HEIGHTS.

BB. PROVIDE PLAM END PANEL WHERE COUNTERTOP ENDS WITHOUT BASE UNIT OR SUPPORTING WALL.

CC. PROVIDE "FLOATING WALL-MOUNT BRACKET" @ 32" O.C. AT ANY OPEN COUNTER WITH SPAN GREATER THAN 3'-0" WIDTH. SEE 10/A940. CONTRACTOR TO VERFIY COORDINATION OF TRADES FOR IN-WALL INSTALLATION

DD. PROVIDE (1) ADJUSTABLE SHELF AT BASE CABINETS EXCEPT SINK BASE, U.O.N.

EE. FIELD VERIFY ALL DIMENSIONS AND EQUIPMENT SIZES PRIOR TO CASEWORK FABRICATION.

FF. PROVIDE 3" DIAMETER GROMMETS AT BACK OF COUNTERTOP AS DIRECTED BY OWNER.

GG. ALL SHELVES ARE ADJUSTABLE, U.O.N.

IDENTIFICATION STAMP
DIV. OF THE STATE ARCHITECT
APP: 02-118630 INC:
REVIEWED FOR
SS ☐ FLS ☐ ACS ☑
DATE: 04/13/2021

OFFICE OF THE STATE FIRE MARSHAL
APPROVED FIRE AND PANIC ONLY
Approval of this plan does not authorize or approve any omission or deviation from applicable regulations. Final approval is subject to field inspection. One set of approved plans shall be available on the project site at all times.
PERMIT NO. 20-N-2332-CP
REVIEWED BY: LEO CATAYLO, OSFM
DATE: 4/1/2021

DGS GENERAL SERVICES
Department of General Services
State of California
Real Estate Services Division
Project Management & Development Branch
707 Third Street, Suite 4-105
West Sacramento, California 95605

NICHOLS MELBURG & ROSSETTO
ARCHITECTS + ENGINEERS
300 Knollcrest Drive
Redding, CA. 96002
(530) 222-3300 (530) 222-3538 FAX
http://www.nmrdesign.com

Copyright © 2020
All ideas, designs, arrangements and plans indicated or represented by this drawing are owned by, and the property of, NICHOLS, MELBURG and ROSSETTO and were created, evolved and developed for use on, and in conjunction with, the specified project. None of such ideas, designs, arrangements or plans shall be used by, or disclosed to any person, firm or corporation for any purpose whatsoever without the written permission of NICHOLS, MELBURG and ROSSETTO

LICENSE STAMPS

LICENSED ARCHITECT KYLE MATTHEW MELBURG 21504 RENEWAL 10/31/21 STATE OF CALIFORNIA

CONSULTANT

DRAWING STATUS
CONSTRUCTION DOCUMENTS

ISSUE

No.	Date	Description
1	10/20/2020	INITIAL PLAN REVIEW
2	01/22/2021	AGENCY RESUBMITTAL
3	03/22/2021	AGENCY RESUBMITTAL

If drawing is not 30" x 42" it is a reduced print

PROJECT
RESIDENTIAL CENTER, UKIAH: REPLACEMENT OF EXISTING RESIDENTIAL CENTER
440 EAST HILL ROAD
WILLITS, CALIFORNIA 95490
MENDOCINO COUNTY
CALIFORNIA CONSERVATION CORPS

Supervisor	Designed	Drawn
KJM	DMH	Author

DSA Application No.
02-118630

SHEET TITLE
WOMEN'S HOUSING INTERIOR ELEVATIONS

DGS Project Number	NMR Project Number
00000000001826	18-6456

Reference North | Sheet Scale: As indicated | Sheet Number: A500HW

ISSUE DATE
July 9, 2021

Plot Date: 3/19/2021 8:55:16 AM
File Name: BIM 360://CCC Willits Residential Center/A_CCC-WRC-DORM-WOMEN.rvt

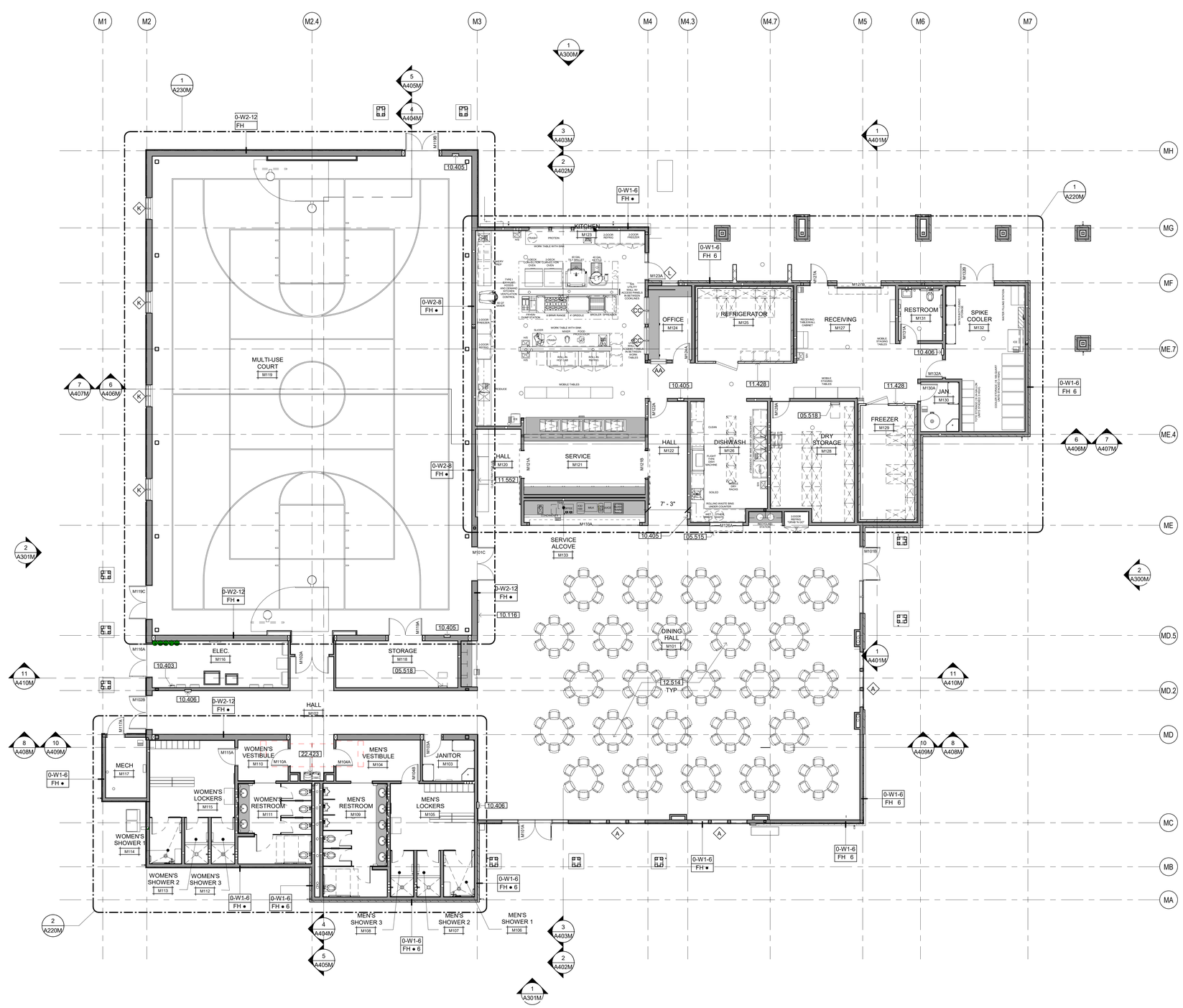

MULTI-PURPOSE FLOOR PLAN

SCALE: 1/8" = 1'-0"

KEYNOTES

05.515	STAINLESS STEEL COUNTERTOP
05.518	PIVOTAL SHIPS LADDER - SEE DETAIL 3/A931
10.116	GLASS DISPLAY MESSAGE BOARD
10.403	SURFACE-MOUNTED FIRE EXTINGUISHER CABINET PER DETAIL 3A/A960
10.405	RECESSED FIRE EXTINGUISHER CABINET PER DETAIL 2A/A960
10.406	SEMI-RECESSED FIRE EXTINGUISHER CABINET PER DETAIL 2B/A960
11.428	WALK-IN UNIT, SEE FOOD SERVICE DRAWING FOR MORE INFORMATION
11.552	WALL MOUNTED TELEVISION, C.F.C.I - SEE DETAIL 17/A960
12.514	MOVEABLE TABLES AND CHAIRS - CFCI
22.423	ACCESSIBLE DRINKING FOUNTAIN HI-LO WITH BOTTLE FILL-SEE DETAIL 4/G212

GENERAL NOTES

A. FOR WALL ASSEMBLIES REFER TO GENERAL ASSEMBLIES, SHEET G121.
B. UNLESS OTHERWISE INDICATED, INTERIOR STUD FRAMED WALLS SHALL BE TYPE 0-2-6.
C. UNLESS OTHERWISE INDICATED, EXTERIOR STUD FRAMED WALLS SHALL BE TYPE 0-1-6.
D. SEE ENLARGED PLANS FOR WALL TYPES NOT INDICATED ON THIS PLAN.
E. REFER TO DETAIL 4/A961 FOR WALL INTERSECTION PRIORITIES.
F. SEE DOOR SCHEDULE, SHEET A710, FOR ADDITIONAL DOOR INFORMATION AND DIMENSIONS. ALL DOOR RATINGS SHALL MATCH OR EXCEED THE RATING OF THE WALL OR PARTITION IN WHICH THEY ARE INSTALLED.
G. SEE WINDOW SCHEDULE, SHEET A720, FOR ADDITIONAL WINDOW INFORMATION AND DIMENSIONS. ALL WINDOW RATINGS SHALL MATCH OR EXCEED THE RATING OF THE WALL OR PARTITION IN WHICH THEY ARE INSTALLED.
H. REFER TO STRUCTURAL NOTES SHEET S011 AND STRUCTURAL DETAIL SHEET S561 FOR TYPICAL WALL FRAMING DETAILS AND REQUIREMENTS
I. REFER TO SHEET A961 FOR HEAD OF WALL ASSEMBLIES
J. REFER TO FINISH SCHEDULE & INTERIOR ELEVATIONS FOR GYPSUM BOARD TYPE & LOCATIONS
K. ALL DIMENSIONS SHALL TAKE PRECEDENCE OVER SCALE SHOWN ON PLANS, SECTIONS AND DETAILS. DIMENSIONS MISSING FROM THE PLANS, OR NEEDED FOR EXECUTION OF WORK, SHALL BE PROVIDED OR CLARIFIED BY THE ARCHITECT BEFORE THE WORK IS INSTALLED. ERRORS RESULTING IN FAILURE TO COMPLY WITH THIS PROCEDURE SHALL BE CORRECTED BY, AND AT THE SOLE EXPENSE OF, THE CONTRACTOR. DIMENSIONS ARE TO FACE OF STUDS OR SLAB UNLESS NOTED OTHERWISE ON DRAWINGS. DO NOT SCALE DRAWINGS. DIMENSIONS NOTED AS "CLEAR" (CLR) ARE TAKEN TO THE FACE OF FINISH MATERIALS. THE CONTRACTOR SHALL VERIFY DIMENSIONS OF PREFABRICATED AND MANUFACTURED ITEMS AND COORDINATE ROUGH OPENINGS ACCORDINGLY.
   1. ALL DIMENSIONS ARE TO FACE OF STUD, CENTERLINE OF COLUMNS, FACE OF CONCRETE
   2. FINISH FLOOR DIMENSIONS ARE TO TOP OF CONCRETE OR OTHER HARD SURFACE
   3. CEILING HEIGHT DIMENSIONS ARE TO FINISH SURFACES

FLOOR PLAN LEGEND

- DOOR WITH TAG - SEE SCHEDULE, SHEET A710
- WINDOW WITH TAG - SEE SCHEDULE, SHEET A720
- COUNTERTOP OVER CASEWORK - DASHED LINE INDICATES WALL MOUNTED CASEWORK ABOVE - SEE INTERIOR ELEVATIONS
- RECESSED FIRE EXTINGUISHER & CABINET (FEC)
- SINK / LAVATORY - SEE PLUMBING DRAWINGS
- TOILET - SEE PLUMBING DRAWINGS
- URINAL - SEE PLUMBING DRAWINGS
- DRINKING FOUNTAIN - SEE PLUMBING DRAWINGS

WALL TYPES LEGEND

SEE SHEET G121 FOR ASSEMBLY TYPES

EXTERIOR

2 x 6 WOOD STUD WALL - NON RATED	0-W1-6 * ● #
2 x 12 WOOD STUD WALL - NON RATED	0-W1-12 * ● #

INTERIOR

2 x 4 WOOD STUD WALL - NON RATED	0-W2-4 * ● #
2 x 6 WOOD STUD WALL - NON RATED	0-W2-6 * ● #
2 x 8 WOOD STUD WALL - NON RATED	0-W2-8 * ● #
2 x 12 WOOD STUD WALL - NON RATED	0-W2-12 * ● #
2 x 4 WOOD STUD WALL - ACOUSTIC	0-W5-4 * ● #
2 x 6 WOOD STUD WALL - ACOUSTIC	0-W5-6 * ● #
2 X 4 WOOD STUD WALL - 1-HR FIRE PARTITION W/ PROTECTED OPENINGS	1-W3-4 * ● #
2 X 6 WOOD STUD WALL - 1-HR FIRE PARTITION W/ PROTECTED OPENINGS	1-W3-6 * ● #

WALL TYPE NOTES

PARTITION SYMBOL

- FIRE-RESISTIVE RATING
- ASSEMBLY DETAIL NUMBER
- NOMINAL STUD SIZE
- # = SPECIAL CONDITIONS
- * = PARTITION HEIGHT

IDENTIFICATION STAMP
DIV. OF THE STATE ARCHITECT
APP: 02-118630 INC:
REVIEWED FOR
SS ☐ FLS ☐ ACS ☑
DATE: 04/13/2021

OFFICE OF THE STATE FIRE MARSHAL
APPROVED FIRE AND PANIC ONLY
Approval of this plan does not authorize or approve any omission or deviation from applicable regulations. Final approval is subject to field inspection. One set of approved plans shall be available on the project site at all times.
PERMIT NO. 20-N-2332-CP
REVIEWED BY: LEO CATAYLO, OSFM
DATE: 4 / /2021

DGS GENERAL SERVICES
Department of General Services
State of California
Real Estate Services Division
Project Management & Development Branch
707 Third Street, Suite 4-105
West Sacramento, California 95605

NICHOLS MELBURG & ROSSETTO ARCHITECTS + ENGINEERS
300 Knollcrest Drive
Redding, CA. 96002
(530) 222-3300 (530) 222-3538 FAX
http://www.nmrdesign.com

Copyright © 2020
All ideas, designs, arrangements and plans indicated or represented by this drawing are owned by, and the property of, NICHOLS, MELBURG and ROSSETTO and were created, evolved and developed for use on, and in conjunction with, the specified project. None of such ideas, designs, arrangements or plans shall be used by, or disclosed to any person, firm or corporation for any purpose whatsoever without the written permission of NICHOLS, MELBURG and ROSSETTO.

LICENSE STAMPS

LICENSED ARCHITECT — KYLE MATTHEW ROSSETTO — 21504 — REN. 10/31/21 — STATE OF CALIFORNIA

CONSULTANT

DRAWING STATUS
CONSTRUCTION DOCUMENTS

ISSUE

No.	Date	Description
1	10/20/2020	INITIAL PLAN REVIEW
2	01/22/2021	AGENCY RESUBMITTAL
3	03/22/2021	AGENCY RESUBMITTAL

If drawing is not 30" x 42" it is a reduced print

PROJECT
RESIDENTIAL CENTER, UKIAH: REPLACEMENT OF EXISTING RESIDENTIAL CENTER
440 EAST HILL ROAD
WILLITS, CALIFORNIA 95490
MENDOCINO COUNTY
CALIFORNIA CONSERVATION CORP

Supervisor	Designed	Drawn
KJM	DMH	KH

DSA Application No.
02-118630

SHEET TITLE
MULTI-PURPOSE FLOOR PLAN

DGS Project Number: 000000000001826
NMR Project Number: 18-6456

Reference North: NORTH
Sheet Scale: As indicated
Sheet Number: A201M

ISSUE DATE
July 9, 2021

Plot Date: 3/19/2021 8:02:22 AM
File Name: BIM 360://CCC-Willits Residential Center/A_CCC-WRC-MP.rvt

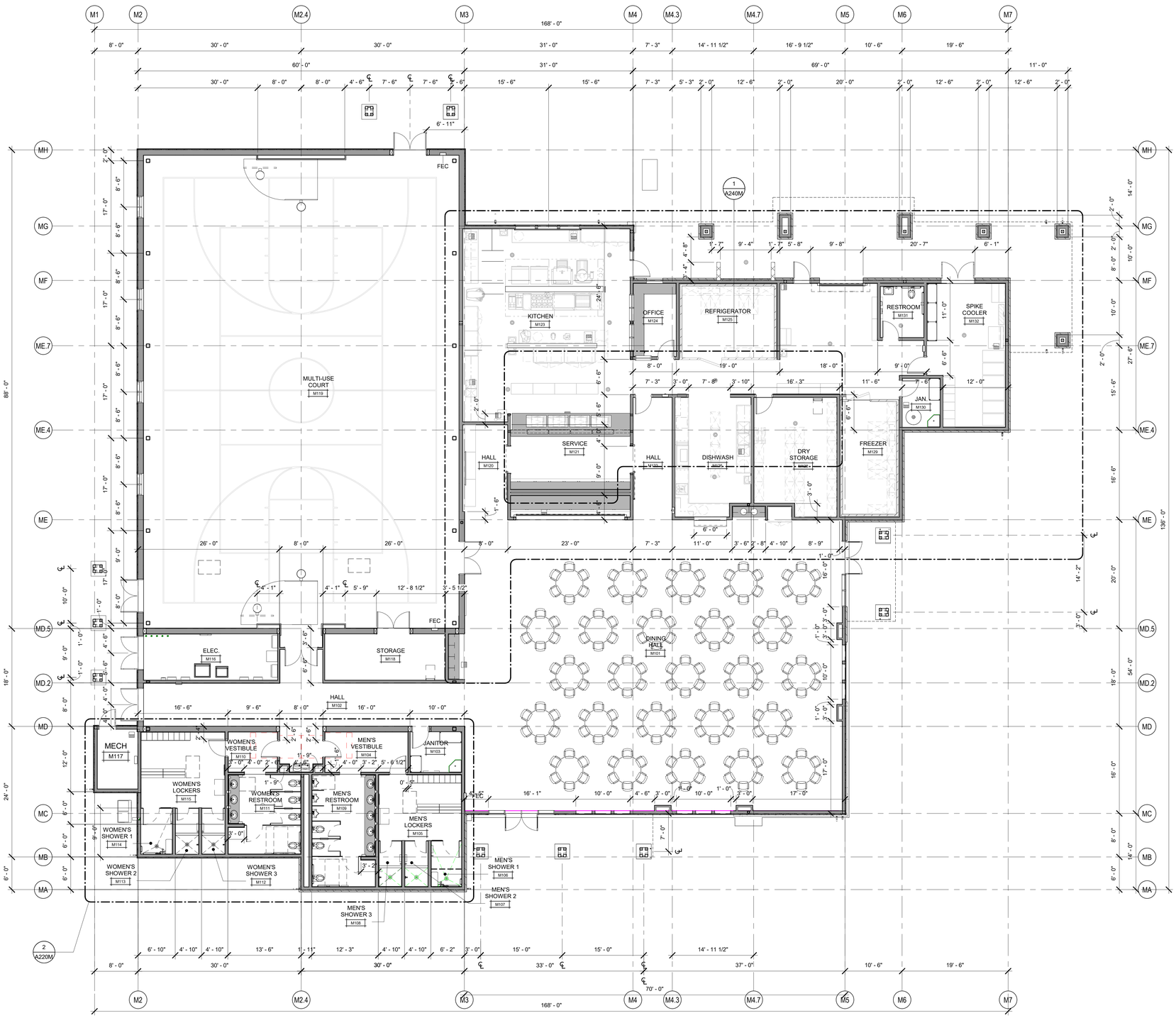

MULTI-PURPOSE DIMENSION PLAN

SCALE: 1/8" = 1'-0"

GENERAL NOTES

A. FOR WALL ASSEMBLIES REFER TO GENERAL ASSEMBLIES, SHEET G121.
B. UNLESS OTHERWISE INDICATED, INTERIOR STUD FRAMED WALLS SHALL BE TYPE 0-2-6.
C. UNLESS OTHERWISE INDICATED, EXTERIOR STUD FRAMED WALLS SHALL BE TYPE 0-1-6.
D. SEE ENLARGED PLANS FOR WALL TYPES NOT INDICATED ON THIS PLAN
E. REFER TO DETAIL 4/A961 FOR WALL INTERSECTION PRIORITIES.
F. SEE DOOR SCHEDULE, SHEET A710, FOR ADDITIONAL DOOR INFORMATION AND DIMENSIONS. ALL DOOR RATINGS SHALL MATCH OR EXCEED THE RATING OF THE WALL OR PARTITION IN WHICH THEY ARE INSTALLED.
G. SEE WINDOW SCHEDULE, SHEET A720, FOR ADDITIONAL WINDOW INFORMATION AND DIMENSIONS. ALL WINDOW RATINGS SHALL MATCH OR EXCEED THE RATING OF THE WALL OR PARTITION IN WHICH THEY ARE INSTALLED.
H. REFER TO STRUCTURAL NOTES SHEET S011 AND STRUCTURAL DETAIL SHEET S561 FOR TYPICAL WALL FRAMING DETAILS AND REQUIREMENTS
I. REFER TO SHEET A961 FOR HEAD OF WALL ASSEMBLIES
J. REFER TO FINISH SCHEDULE & INTERIOR ELEVATIONS FOR GYPSUM BOARD TYPE & LOCATIONS
K. ALL DIMENSIONS SHALL TAKE PRECEDENCE OVER SCALE SHOWN ON PLANS, SECTIONS AND DETAILS. DIMENSIONS MISSING FROM THE PLANS, OR NEEDED FOR EXECUTION OF WORK, SHALL BE PROVIDED OR CLARIFIED BY THE ARCHITECT BEFORE THE WORK IS INSTALLED. ERRORS RESULTING IN FAILURE TO COMPLY WITH THIS PROCEDURE SHALL BE CORRECTED BY, AND AT THE SOLE EXPENSE OF, THE CONTRACTOR. DIMENSIONS ARE TO FACE OF STUDS OR SLAB UNLESS NOTED OTHERWISE ON DRAWINGS. DO NOT SCALE DRAWINGS. DIMENSIONS NOTED AS "CLEAR" (CLR) ARE TAKEN TO THE FACE OF FINISH MATERIALS. THE CONTRACTOR SHALL VERIFY DIMENSIONS OF PREFABRICATED AND MANUFACTURED ITEMS AND COORDINATE ROUGH OPENINGS ACCORDINGLY.

1. ALL DIMENSIONS ARE TO FACE OF STUD, CENTERLINE OF COLUMNS, FACE OF CONCRETE
2. FINISH FLOOR DIMENSIONS ARE TO TOP OF CONCRETE OR OTHER HARD SURFACE
3. CEILING HEIGHT DIMENSIONS ARE TO FINISH SURFACES

WALL TYPES LEGEND

SEE SHEET G121 FOR ASSEMBLY TYPES

EXTERIOR

2 x 6 WOOD STUD WALL - NON RATED	0-W1-6	*-● #
2 x 12 WOOD STUD WALL - NON RATED	0-W1-12	*-● #

INTERIOR

2 x 4 WOOD STUD WALL - NON RATED	0-W2-4	*-● #
2 x 6 WOOD STUD WALL - NON RATED	0-W2-6	*-● #
2 x 8 WOOD STUD WALL - NON RATED	0-W2-8	*-● #
2 x 12 WOOD STUD WALL - NON RATED	0-W2-12	*-● #
2 x 4 WOOD STUD WALL - ACOUSTIC	0-W5-4	*-● #
2 x 6 WOOD STUD WALL - ACOUSTIC	0-W5-6	*-● #
2 X 4 WOOD STUD WALL - 1-HR FIRE PARTITION W/ PROTECTED OPENINGS	1-W3-4	*-● #
2 X 6 WOOD STUD WALL - 1-HR FIRE PARTITION W/ PROTECTED OPENINGS	1-W3-6	*-● #

WALL TYPE NOTES

PARTITION SYMBOL

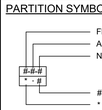

- FIRE-RESISTIVE RATING
- ASSEMBLY DETAIL NUMBER
- NOMINAL STUD SIZE
- # = SPECIAL CONDITIONS
- * = PARTITION HEIGHT

IDENTIFICATION STAMP
DIV. OF THE STATE ARCHITECT
APP: 02-118630 INC:
REVIEWED FOR
SS ☐ FLS ☐ ACS ☑
DATE: 04/13/2021

OFFICE OF THE STATE FIRE MARSHAL
APPROVED FIRE AND PANIC ONLY
Approval of this plan does not authorize or approve any omission or deviation from applicable regulations. Final approval is subject to field inspection. One set of approved plans shall be available on the project site at all times.
PERMIT NO. 20-N-2332-CP
REVIEWED BY: LEO CATAYLO, OSFM
DATE: 4 / /2021

GENERAL SERVICES
Department of General Services
State of California
Real Estate Services Division
Project Management & Development Branch
707 Third Street, Suite 4-105
West Sacramento, California 95605

NICHOLS MELBURG & ROSSETTO ARCHITECTS + ENGINEERS
300 Knollcrest Drive
Redding, CA. 96002
(530) 222-3300 (530) 222-3538 FAX
http://www.nmrdesign.com

Copyright © 2020
All ideas, designs, arrangements and plans indicated or represented by this drawing are owned by, and the property of, NICHOLS, MELBURG and ROSSETTO and were created, evolved and developed for use on, and in conjunction with, the specified project. None of such ideas, designs, arrangements or plans shall be used by, or disclosed to any person, firm or corporation for any purpose whatsoever without the written permission of NICHOLS, MELBURG and ROSSETTO.

LICENSE STAMPS

LICENSED ARCHITECT KYLE MATTHEW ROSSETTO 21504 REN. 10/31/21 STATE OF CALIFORNIA

CONSULTANT

DRAWING STATUS
CONSTRUCTION DOCUMENTS

ISSUE

No.	Date	Description
1	10/20/2020	INITIAL PLAN REVIEW
2	01/22/2021	AGENCY RESUBMITTAL
3	03/22/2021	AGENCY RESUBMITTAL

If drawing is not 30" x 42" it is a reduced print

PROJECT
RESIDENTIAL CENTER, UKIAH: REPLACEMENT OF EXISTING RESIDENTIAL CENTER
440 EAST HILL ROAD
WILLITS, CALIFORNIA 95490
MENDOCINO COUNTY
CALIFORNIA CONSERVATION CORP

Supervisor	Designed	Drawn
KJM	DMH	Author

DSA Application No.
02-118630

SHEET TITLE
MULTI-PURPOSE DIMENSION PLAN

DGS Project Number: 000000000001826
NMR Project Number: 18-6456

Reference North
Sheet Scale: As indicated
Sheet Number: A210M

ISSUE DATE
July 9, 2021

Plot Date: 3/19/2021 8:03:28 AM
File Name: BIM 360://CCC-Willits Residential Center/A_CCC-WRC-MP.rvt

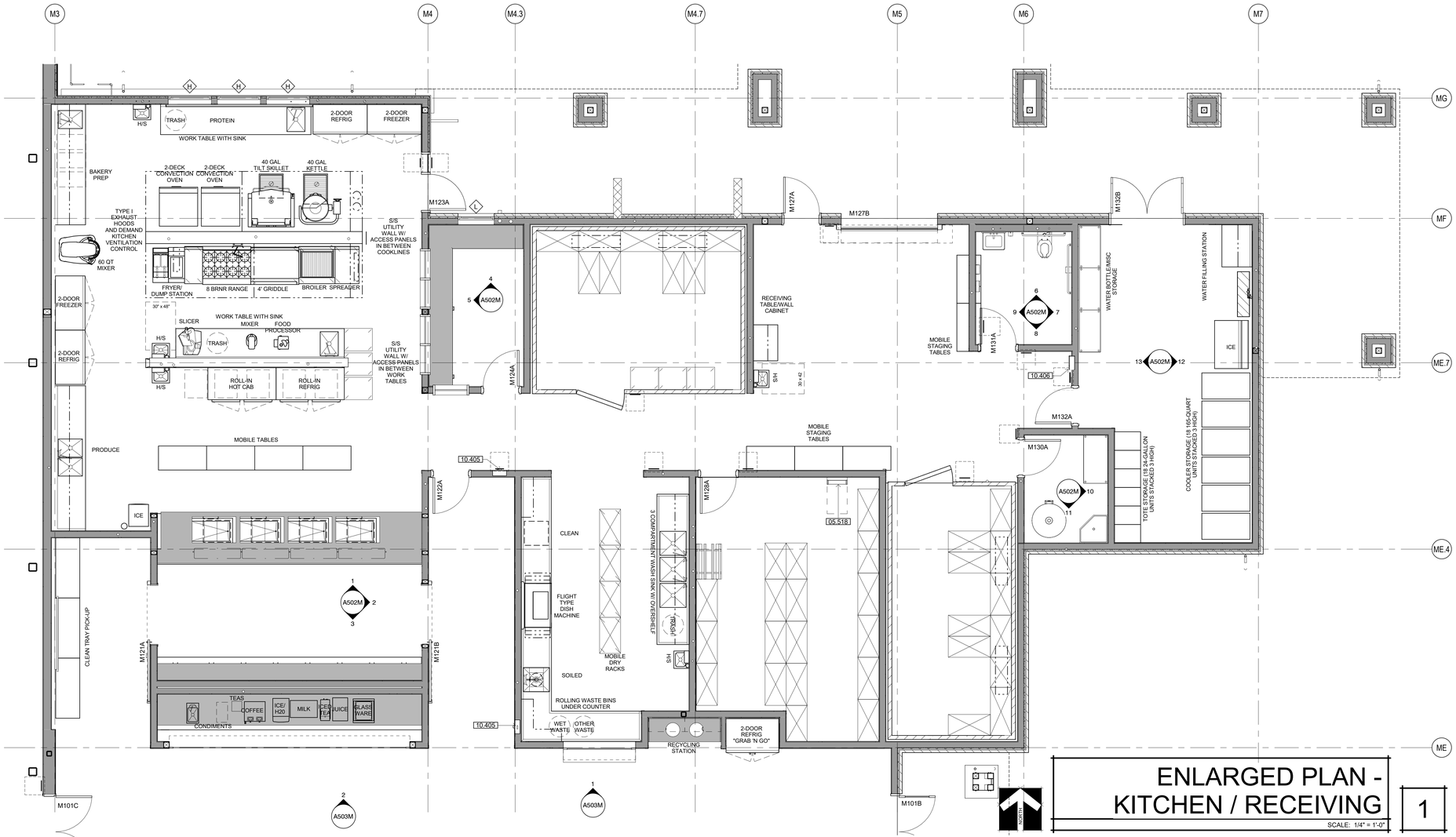

ENLARGED PLAN - KITCHEN / RECEIVING

1

SCALE: 1/4" = 1'-0"

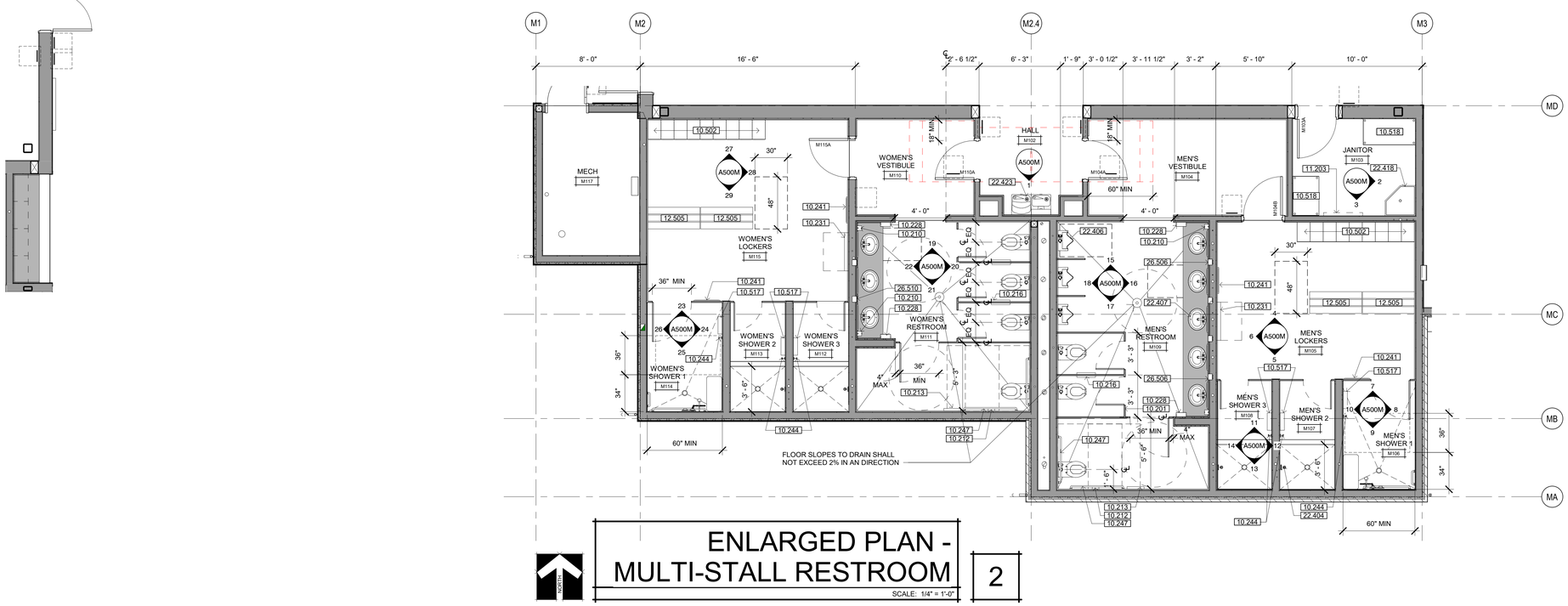

ENLARGED PLAN - MULTI-STALL RESTROOM

2

SCALE: 1/4" = 1'-0"

KEYNOTES

05.518	PIVOTAL SHIPS LADDER - SEE DETAIL 3/A931
10.201	TOILET COMPARTMENT - OVERHEAD BRACE - SEE 8/A960
10.210	SOAP DISPENSER
10.212	SEMI-RECESSED TOILET TISSUE DISPENSER
10.213	SURFACE MOUNTED TOILET SEAT COVER DISPENSER
10.216	RECESSED COMBINATION TOILET TISSUE DISPENSER AND SEAT COVER DISPENSER
10.228	HAND DRYER
10.231	SURFACE MOUNTED FOLD-DOWN BABY CHANGING STATION
10.241	MIRROR, 24"W X 60"H FULL LENGTH, COMPLYING WITH CBC 803.6
10.244	GARMENT HOOK
10.247	GRAB BARS, 48" AT SIDE & 42" AT BACK - SEE DETAIL 4/A960
10.405	RECESSED FIRE EXTINGUISHER CABINET PER DETAIL 2A/A960
10.406	SEMI-RECESSED FIRE EXTINGUISHER CABINET PER DETAIL 2B/A960
10.502	2-TIER LOCKERS
10.517	STAINLESS STEEL SHELF, 4" MAX. PROJECTION
10.518	FREESTANDING SHELVING UNIT
11.203	COMBINATION UTILITY SHELF WITH MOP AND BROOM HOLDER
12.505	LOCKER ROOM BENCH, 20" X 48"
22.404	SHOWER - SEE PLUMBING DRAWINGS
22.406	ACCESSIBLE URINAL - SEE PLUMBING DRAWINGS
22.407	ACCESSIBLE SINK - SEE PLUMBING DRAWINGS
22.418	JANITOR SINK-SEE PLUMBING DRAWINGS
22.423	ACCESSIBLE DRINKING FOUNTAIN HI-LO WITH BOTTLE FILL-SEE DETAIL 4/G212
26.506	WALL MOUNTED LIGHT FIXTURE-CENTER BETWEEN MIRROR
26.510	WALL MOUNTED UP/DOWN LIGHT FIXTURE

WALL TYPES LEGEND

SEE SHEET G121 FOR ASSEMBLY TYPES

EXTERIOR

2 x 6 WOOD STUD WALL - NON RATED	0-W1-6 * ● #
2 x 12 WOOD STUD WALL - NON RATED	0-W1-12 * ● #

INTERIOR

2 x 4 WOOD STUD WALL - NON RATED	0-W2-4 * ● #
2 x 6 WOOD STUD WALL - NON RATED	0-W2-6 * ● #
2 x 8 WOOD STUD WALL - NON RATED	0-W2-8 * ● #
2 x 12 WOOD STUD WALL - NON RATED	0-W2-12 * ● #
2 x 4 WOOD STUD WALL - ACOUSTIC	0-W5-4 * ● #
2 x 6 WOOD STUD WALL - ACOUSTIC	0-W5-6 * ● #
2 X 4 WOOD STUD WALL - 1-HR FIRE PARTITION W/ PROTECTED OPENINGS	1-W3-4 * ● #
2 X 6 WOOD STUD WALL - 1-HR FIRE PARTITION W/ PROTECTED OPENINGS	1-W3-6 * ● #

WALL TYPE NOTES

PARTITION SYMBOL

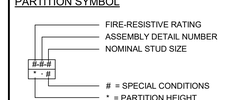

IDENTIFICATION STAMP
DIV. OF THE STATE ARCHITECT
APP: 02-118630 INC:
REVIEWED FOR
SS ☐ FLS ☐ ACS ☑
DATE: 04/13/2021

OFFICE OF THE STATE FIRE MARSHAL
APPROVED FIRE AND PANIC ONLY
Approval of this plan does not authorize or approve any omission or deviation from applicable regulations. Final approval is subject to field inspection. One set of approved plans shall be available on the project site at all times.
PERMIT NO. 20-N-2332-CP
REVIEWED BY: LEO CATAYLO, OSFM
DATE: 4 /2021

GENERAL SERVICES
Department of General Services
State of California
Real Estate Services Division
Project Management & Development Branch
707 Third Street, Suite 4-105
West Sacramento, California 95605

NICHOLS MELBURG & ROSSETTO ARCHITECTS + ENGINEERS
300 Knollcrest Drive
Redding, CA. 96002
(530) 222-3300 (530) 222-3538 FAX
http://www.nmrdesign.com

Copyright © 2020
All ideas, designs, arrangements and plans indicated or represented by this drawing are owned by, and the property of, NICHOLS, MELBURG and ROSSETTO and were created, evolved and developed for use on, and in conjunction with, the specified project. None of such ideas, designs, arrangements or plans shall be used by, or disclosed to any person, firm or corporation for any purpose whatsoever without the written permission of NICHOLS, MELBURG and ROSSETTO

LICENSE STAMPS

LICENSED ARCHITECT KYLE MATT 21504 REN. 10/31/21 STATE OF CALIFORNIA

CONSULTANT

DRAWING STATUS
CONSTRUCTION DOCUMENTS

ISSUE

No.	Date	Description
1	10/20/2020	INITIAL PLAN REVIEW
2	01/22/2021	AGENCY RESUBMITTAL
3	03/22/2021	AGENCY RESUBMITTAL

If drawing is not 30" x 42" it is a reduced print

PROJECT
RESIDENTIAL CENTER, UKIAH: REPLACEMENT OF EXISTING RESIDENTIAL CENTER
440 EAST HILL ROAD
WILLITS, CALIFORNIA 95490
MENDOCINO COUNTY
CALIFORNIA CONSERVATION CORP

Supervisor	Designed	Drawn
KJM	DMH	Author

DSA Application No.
02-118630

SHEET TITLE
MULTI-PURPOSE ENLARGED PLAN

DGS Project Number: 000000000001826
NMR Project Number: 18-6456

Reference North: NORTH
Sheet Scale: As indicated
Sheet Number: A220M

ISSUE DATE
July 9, 2021

Plot Date: 2/10/2021 9:05:24 AM
File Name: BIM 360://CCC-Willits Residential Center/A_CCC-WRC-MP.rvt

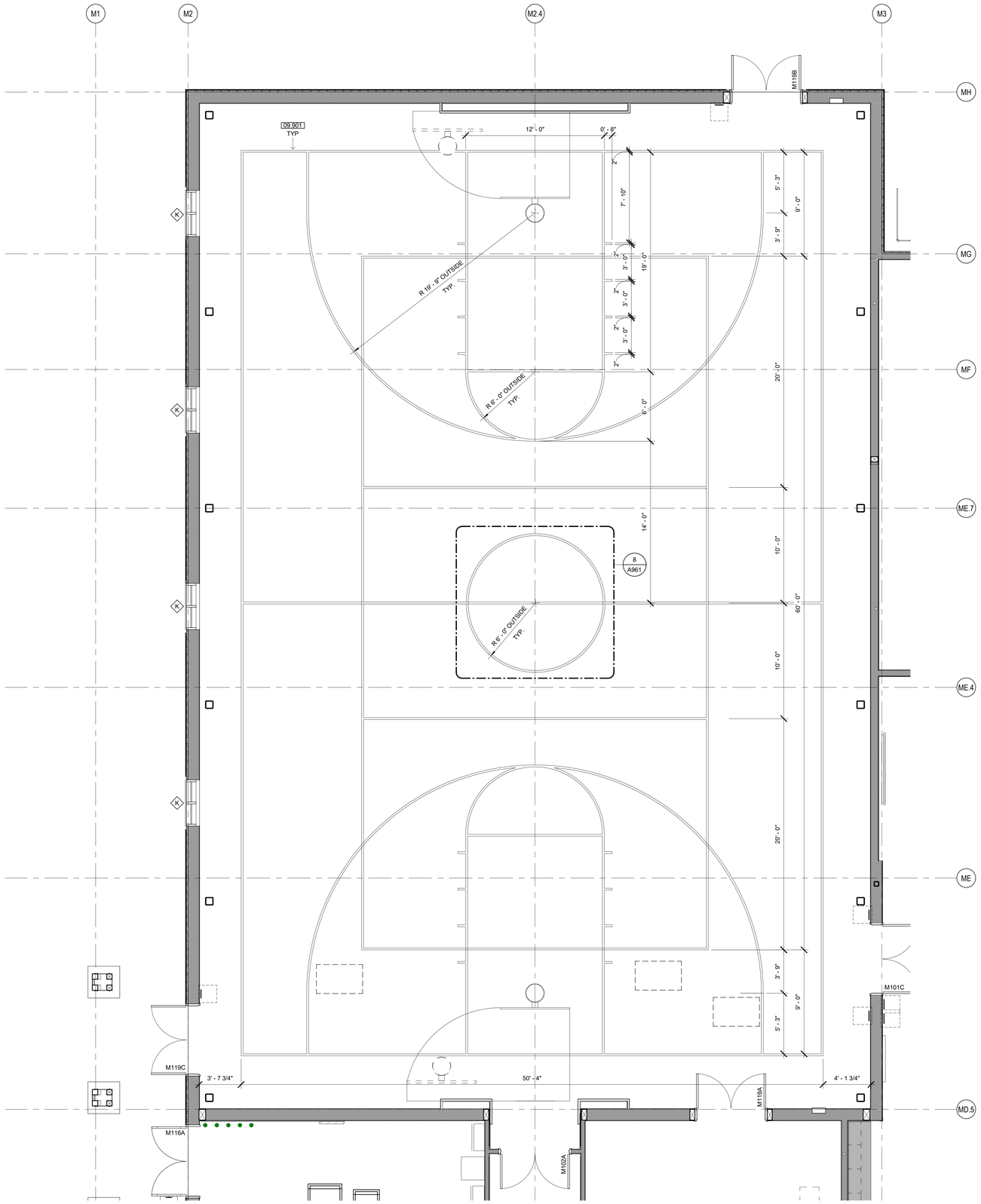

MULTI-PURPOSE BASKETBALL COURT STRIPING PLAN

SCALE: 1/4" = 1'-0"

KEYNOTES

09.901	COURT STRIPING - SEE 12/A961 FOR PERIMETER BOUNDARY STRIPING. PROVIDE FULL COURT STRIPING IN CONTRASTING COLORS TO BE CHOSEN BY ARCHITECT.

WALL TYPES LEGEND

SEE SHEET G121 FOR ASSEMBLY TYPES

EXTERIOR

	2 x 6 WOOD STUD WALL - NON RATED	0-W1-6 * ◆ #
	2 x 12 WOOD STUD WALL - NON RATED	0-W1-12 * ◆ #

INTERIOR

	2 x 4 WOOD STUD WALL - NON RATED	0-W2-4 * ◆ #
	2 x 6 WOOD STUD WALL - NON RATED	0-W2-6 * ◆ #
	2 x 8 WOOD STUD WALL - NON RATED	0-W2-8 * ◆ #
	2 x 12 WOOD STUD WALL - NON RATED	0-W2-12 * ◆ #
	2 x 4 WOOD STUD WALL - ACOUSTIC	0-W5-4 * ◆ #
	2 x 6 WOOD STUD WALL - ACOUSTIC	0-W5-6 * ◆ #
	2 X 4 WOOD STUD WALL - 1-HR FIRE PARTITION W/ PROTECTED OPENINGS	1-W3-4 * ◆ #
	2 X 6 WOOD STUD WALL - 1-HR FIRE PARTITION W/ PROTECTED OPENINGS	1-W3-6 * ◆ #

WALL TYPE NOTES

PARTITION SYMBOL

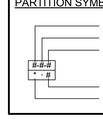

IDENTIFICATION STAMP
DIV. OF THE STATE ARCHITECT
APP: 02-118630 INC:
REVIEWED FOR
SS ☐ FLS ☐ ACS ☑
DATE: 04/13/2021

OFFICE OF THE STATE FIRE MARSHAL
APPROVED FIRE AND PANIC ONLY
Approval of this plan does not authorize or approve any omission or deviation from applicable regulations. Final approval is subject to field inspection. One set of approved plans shall be available on the project site at all times.
PERMIT NO. 20-N-2332-CP
REVIEWED BY: LEO CATAYLO, OSFM
DATE: 4/ /2021

GENERAL SERVICES
Department of General Services
State of California
Real Estate Services Division
Project Management & Development Branch
707 Third Street, Suite 4-105
West Sacramento, California 95605

NICHOLS MELBURG & ROSSETTO
ARCHITECTS + ENGINEERS
300 Knollcrest Drive
Redding, CA. 96002
(530) 222-3300 (530) 222-3538 FAX
http://www.nmrdesign.com

Copyright © 2020
All ideas, designs, arrangements and plans indicated or represented by this drawing are owned by, and the property of, NICHOLS, MELBURG and ROSSETTO and were created, evolved and developed for use on, and in conjunction with, the specified project. None of such ideas, designs, arrangements or plans shall be used by, or disclosed to any person, firm or corporation for any purpose whatsoever without the written permission of NICHOLS, MELBURG and ROSSETTO.

LICENSE STAMPS

LICENSED ARCHITECT
KYLE MATTHEW ROSSETTO
C-31504
REN. 10/31/21
STATE OF CALIFORNIA

CONSULTANT

DRAWING STATUS
CONSTRUCTION DOCUMENTS

ISSUE

No.	Date	Description
1	10/20/2020	INITIAL PLAN REVIEW
2	01/22/2021	AGENCY RESUBMITTAL
3	03/22/2021	AGENCY RESUBMITTAL

If drawing is not 30" x 42" it is a reduced print

PROJECT
RESIDENTIAL CENTER, UKIAH: REPLACEMENT OF EXISTING RESIDENTIAL CENTER
440 EAST HILL ROAD
WILLITS, CALIFORNIA 95490
MENDOCINO COUNTY
CALIFORNIA CONSERVATION CORP

Supervisor	Designed	Drawn
KJM	DMH	Author

DSA Application No.
02-118630

SHEET TITLE
MULTI-PURPOSE BASKETBALL COURT STRIPING PLAN

DGS Project Number: 00000000001826
NMR Project Number: 18-6456

Reference North
Sheet Scale: As indicated
Sheet Number: A230M

ISSUE DATE
July 9, 2021

Plot Date: 3/19/2021 9:03:36 AM
File Name: BM 3001 (CCC-W)\Willits Residential Center\A_CCC-WRC-MP.rvt

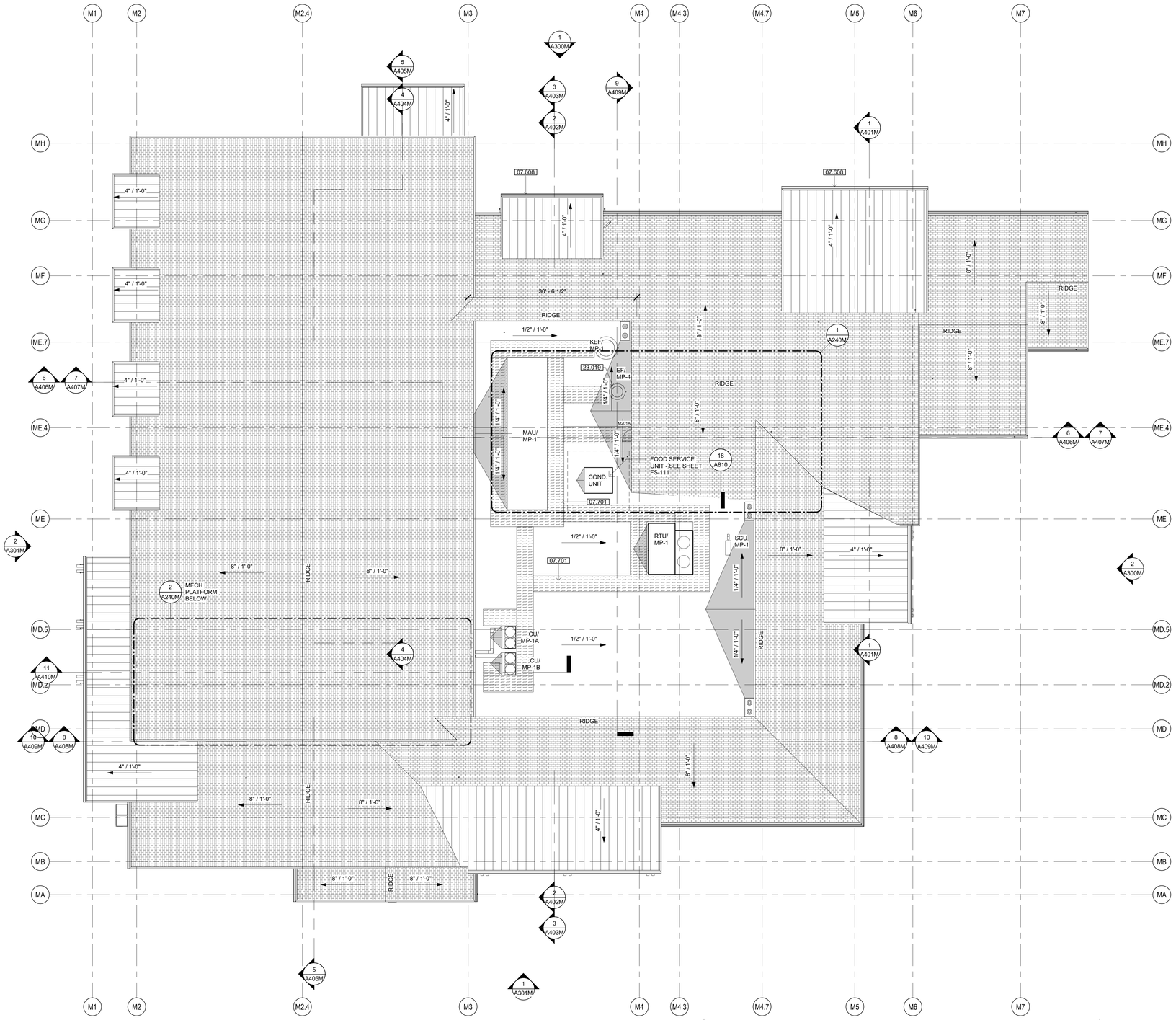

MULTI-PURPOSE ROOF PLAN

SCALE: 1/8" = 1'-0"

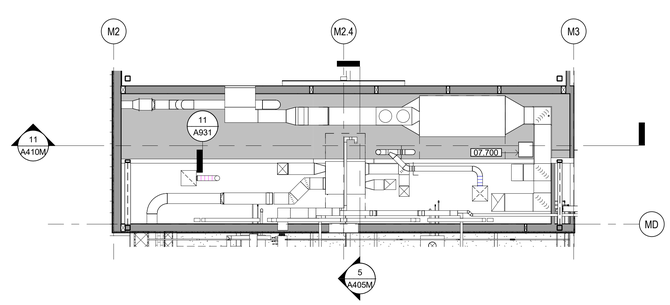

2 MECHANICAL PLATFORM
1/8" = 1'-0"

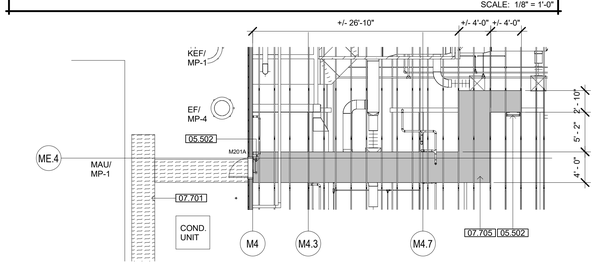

1 ENLARGED PLAN - ATTIC SPACE MECH. WALKWAY
1/8" = 1'-0"

KEYNOTES

05.502	ATTIC ACCESS LADDER - SEE DETAIL 8/A931
07.608	SEAMLESS RAINWATER GUTTER SYSTEM, PAINTED
07.700	ACCESS HATCH - REFER TO 12/A931
07.701	ROOF WALKWAY PAD
07.705	PLYWOOD WALKWAY O/ ROOF TRUSS BTM. CHORD
23.019	EXHAUST FAN, SEE DETAIL 3/A811 FOR CURB

ROOF PLAN NOTES

A. ALL PIPE PENETRATIONS NOT SHOWN. SEE MECHANICAL & PLUMBING DRAWINGS FOR LOCATION INFORMATION, SEE ROOF PIPE PENETRATION DETAIL 5/A810.

B. HVAC CONDENSATE DRAIN PIPES NOT SHOWN. SEE MECHANICAL & PLUMBING DRAWINGS FOR REQUIREMENTS.

ROOF PLAN LEGEND

REFER TO DRAWING G120 FOR TYPICAL ROOF CONSTRUCTION ASSEMBLIES

- ASPHALT SHINGLE ROOFING - SEE SHEET A810
- PREFINISHED METAL ROOFING - SEE SHEET A810
- ROOF WALK PAD - SEE DETAIL
- SINGLE PLY ROOF SYSTEM
- SINGLE PLY ROOF SYSTEM O/ TAPERED FOAM CRICKET
- ROOF DRAIN & OVERFLOW - SEE DETAIL 13/A810 & PLUMBING DRAWINGS FOR CONNECTIONS

IDENTIFICATION STAMP
DIV. OF THE STATE ARCHITECT
APP: 02-118630 INC:
REVIEWED FOR
SS ☐ FLS ☐ ACS ☑
DATE: 04/13/2021

OFFICE OF THE STATE FIRE MARSHAL
APPROVED FIRE AND PANIC ONLY
Approval of this plan does not authorize or approve any omission or deviation from applicable regulations. Final approval is subject to field inspection. One set of approved plans shall be available on the project site at all times.
PERMIT NO. 20-N-2332-CP
REVIEWED BY: LEO CATAYLO, OSFM
DATE: 4 / /2021

DGS GENERAL SERVICES
Department of General Services
State of California
Real Estate Services Division
Project Management & Development Branch
707 Third Street, Suite 4-105
West Sacramento, California 95605

NICHOLS MELBURG & ROSSETTO ARCHITECTS + ENGINEERS
300 Knollcrest Drive
Redding, CA. 96002
(530) 222-3300 (530) 222-3538 FAX
http://www.nmrdesign.com

Copyright © 2020
All ideas, designs, arrangements and plans indicated or represented by this drawing are owned by, and the property of, NICHOLS, MELBURG and ROSSETTO and were created, evolved and developed for use on, and in conjunction with, the specified project. None of such ideas, designs, arrangements or plans shall be used by, or disclosed to any person, firm or corporation for any purpose whatsoever without the written permission of NICHOLS, MELBURG and ROSSETTO.

LICENSE STAMPS

LICENSED ARCHITECT KYLE MAY C-31504 REN. 10/31/21 STATE OF CALIFORNIA

CONSULTANT

DRAWING STATUS
CONSTRUCTION DOCUMENTS

ISSUE

No.	Date	Description
1	10/20/2020	INITIAL PLAN REVIEW
2	01/22/2021	AGENCY RESUBMITTAL
3	03/22/2021	AGENCY RESUBMITTAL

If drawing is not 30" x 42" it is a reduced print

PROJECT
RESIDENTIAL CENTER, UKIAH: REPLACEMENT OF EXISTING RESIDENTIAL CENTER
440 EAST HILL ROAD
WILLITS, CALIFORNIA 95490
MENDOCINO COUNTY
CALIFORNIA CONSERVATION CORP

Supervisor	Designed	Drawn
KJM	DMH	Author

DSA Application No.
02-118630

SHEET TITLE
MULTI-PURPOSE ROOF PLAN

DGS Project Number	NMR Project Number
00000000001826	18-6456

Reference North
Sheet Scale: As indicated
Sheet Number: A240M

ISSUE DATE
July 9, 2021

Plot Date: 3/26/2021 10:27:27 AM
File Name: 8X4 30G:\CCC Willits Residential Center\A_CCC-WRC-MP.rvt

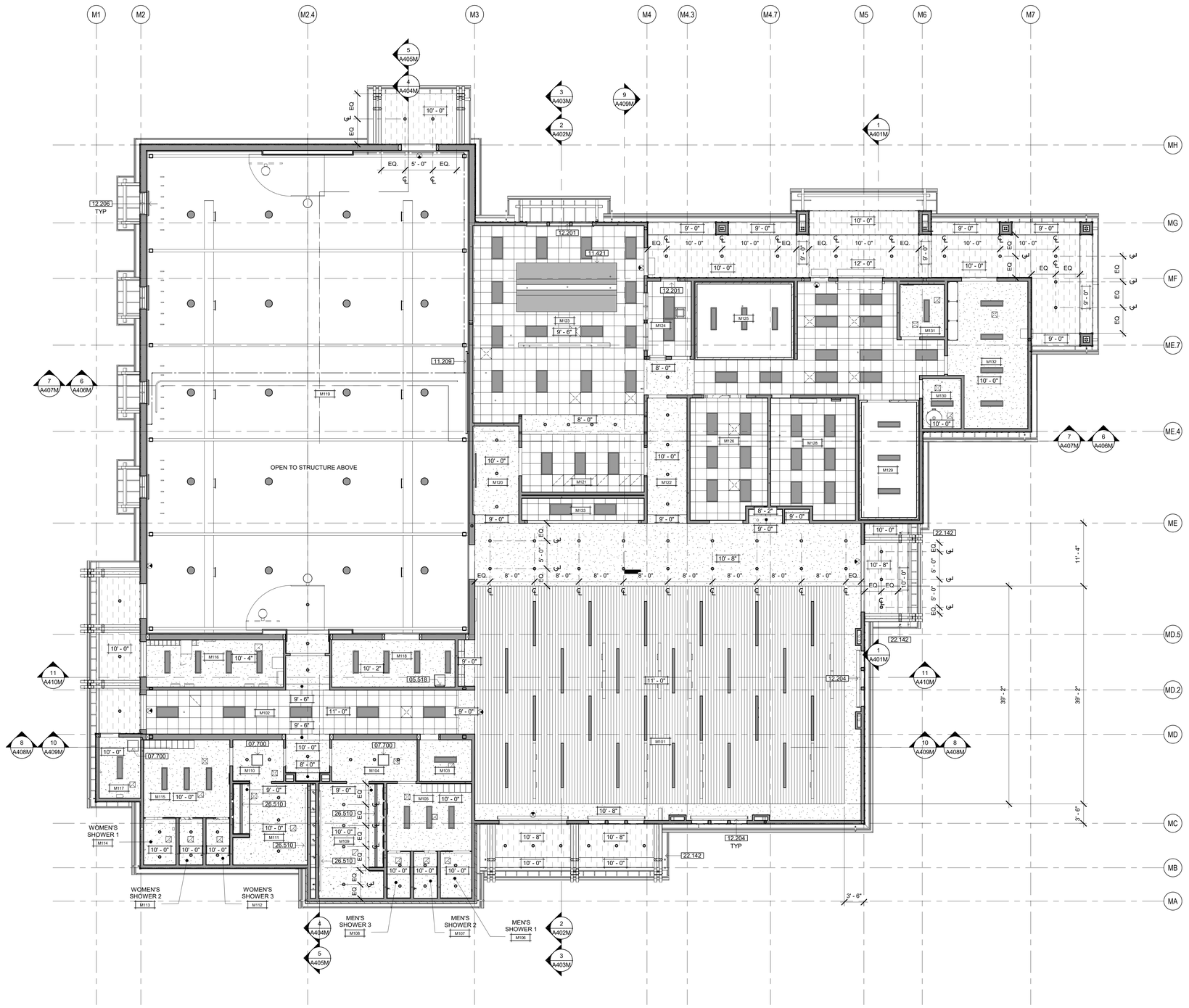

MULTI-PURPOSE REFLECTED CEILING PLAN

SCALE: 1/8" = 1'-0"

KEYNOTES

05.518	PIVOTAL SHIPS LADDER - SEE DETAIL 3/A931
07.700	ACCESS HATCH - REFER TO 12/A931
11.209	WALL-MOUNTED ELECTRIC DROP-DOWN PROJECTION SCREEN
11.421	EXHAUST HOOD - SEE FOOD SERVICE DRAWINGS AND SPECS
12.201	SINGLE ROLL WINDOW SHADE, MANUAL. SEE DETAIL 18/A961
12.204	SINGLE ROLL WINDOW SHADE, MOTORIZED. SEE DETAIL 17/A961
12.206	DOUBLE ROLL WINDOW SHADE, MOTORIZED. SEE DETAIL 19/A961
22.142	RAINWATER LEADER - SEE PLUMBING PLANS
26.510	WALL MOUNTED UP/DOWN LIGHT FIXTURE

GENERAL RCP NOTES

A. ACOUSTICAL CEILING HEIGHTS 10'-0" U.O.N.

B. GYPSUM BOARD CEILING IS AT UNDERSIDE OF STRUCTURAL FRAMING U.O.N.

C. REFER TO MECHANICAL, FIRE PROTECTION, ELECTRICAL, SECURITY, AND AUDIOVISUAL DRAWINGS FOR ADDITIONAL CONSTRUCTION FEATURES, SYSTEMS, FIXTURES, AND EQPT. LOCATED IN, ON, AND ABOVE CEILINGS. TO THE EXTENT THAT THESE ITEMS ARE SHOWN ON REFLECTED CEILING PLANS, THEY ARE FOR GENERAL INFORMATION AND LAYOUT PURPOSES ONLY, AND DO NOT NECESSARILY REPRESENT ACTUAL SCOPE OR QUANTITIES REQUIRED FOR THE PROJECT. ALL QUANTITIES TO BE VERIFIED.

D. AT ACOUSTICAL TILE CEILINGS, ALL FIXTURES AND EQUIPMENT SHALL BE CENTERED WITHIN ACOUSTICAL CEILING TILES, IN BOTH DIRECTIONS.

E. SPRINKLER HEAD LOCATIONS SHALL RESULT IN A UNIFORM AND REPETITIVE PATTERN FOR EACH AREA, AND SHALL BE LOCATED SYMMETRICALLY WITH RESPECT TO WALLS, CEILING GRID PATTERNS, AND LIGHT FIXTURES. SPRINKLER HEADS IN ACOUSTICAL TILE CEILINGS SHALL BE LOCATED IN THE CENTERS OF THE CEILING TILES.

F. TYP. EXTERIOR SOFFIT HEIGHT IS AT UNDERSIDE OF STRUCTURAL FRAMING U.O.N.

RCP LEGEND

REFER TO DRAWING G120 FOR TYPICAL CEILING CONSTRUCTION ASSEMBLIES

- 2' x 2' SUSPENDED ACOUSTICAL TILE CEILING SYSTEM — C 3
- 5/8" GYPSUM BOARD CEILING — C 2
- SUSPENDED WOOD CEILING — C 4
- EXTERIOR FIBER CEMENT SOFFIT, NON-VENTED
- +X'-X" — INDICATES HEIGHT OF FINISHED CEILING OR SOFFIT (FROM REFERENCE FLOOR ELEVATION)
- 2'x4' LAY-IN LIGHT FIXTURE - SEE ELECTRICAL DRAWINGS
- 1'x4' SURFACE MOUNTED LIGHT FIXTURE - SEE ELECTRICAL DRAWINGS
- 6" DIAMETER RECESSED CAN LIGHT FIXTURE - SEE ELECTRICAL DRAWINGS
- 12" DIAMETER PENDANT LIGHT FIXTURE - SEE ELECTRICAL DRAWINGS
- LINEAR LIGHT FIXTURE - SEE ELECTRICAL DRAWINGS
- SUPPLY AIR DIFFUSERS - SEE MECHANICAL DRAWINGS
- RETURN AIR DIFFUSER - SEE MECHANICAL DRAWINGS
- EXHAUST - SEE MECHANICAL DRAWINGS
- LINEAR SLOT DIFFUSER - SEE MECHANICAL DRAWINGS

IDENTIFICATION STAMP
DIV. OF THE STATE ARCHITECT
APP: 02-118630 INC:
REVIEWED FOR
SS ☐ FLS ☐ ACS ☑
DATE: 04/13/2021

OFFICE OF THE STATE FIRE MARSHAL
APPROVED FIRE AND PANIC ONLY
Approval of this plan does not authorize or approve any omission or deviation from applicable regulations. Final approval is subject to field inspection. One set of approved plans shall be available on the project site at all times.
PERMIT NO. 20-N-2332-CP
REVIEWED BY: LEO CATAYLO, OSFM
DATE: 4 / /2021

DGS GENERAL SERVICES
Department of General Services
State of California
Real Estate Services Division
Project Management & Development Branch
707 Third Street, Suite 4-105
West Sacramento, California 95605

NICHOLS MELBURG & ROSSETTO ARCHITECTS + ENGINEERS
300 Knollcrest Drive
Redding, CA. 96002
(530) 222-3300 (530) 222-3538 FAX
http://www.nmrdesign.com

Copyright © 2020
All ideas, designs, arrangements and plans indicated or represented by this drawing are owned by, and the property of, NICHOLS, MELBURG and ROSSETTO and were created, evolved and developed for use on, and in conjunction with, the specified project. None of such ideas, designs, arrangements or plans shall be used by, or disclosed to any person, firm or corporation for any purpose whatsoever without the written permission of NICHOLS, MELBURG and ROSSETTO

LICENSE STAMPS

LICENSED ARCHITECT KYLE MATTHEW ROSSETTO C-21504 REN. 10/31/21 STATE OF CALIFORNIA

CONSULTANT

DRAWING STATUS
CONSTRUCTION DOCUMENTS

ISSUE

No.	Date	Description
1	10/20/2020	INITIAL PLAN REVIEW
2	01/22/2021	AGENCY RESUBMITTAL
3	03/22/2021	AGENCY RESUBMITTAL

If drawing is not 30" x 42" it is a reduced print

PROJECT
RESIDENTIAL CENTER, UKIAH: REPLACEMENT OF EXISTING RESIDENTIAL CENTER
440 EAST HILL ROAD
WILLITS, CALIFORNIA 95490
MENDOCINO COUNTY
CALIFORNIA CONSERVATION CORP

Supervisor	Designed	Drawn
KJM	DMH	Author

DSA Application No.
02-118630

SHEET TITLE
MULTI-PURPOSE REFLECTED CEILING PLAN

DGS Project Number: 000000000001826
NMR Project Number: 18-6456

Reference North
Sheet Scale: As indicated
Sheet Number: A250M

ISSUE DATE
July 9, 2021

Plot Date: 3/19/2021 9:53:02 AM
File Name: 18M 360 / CCC-WRC-MP.rvt

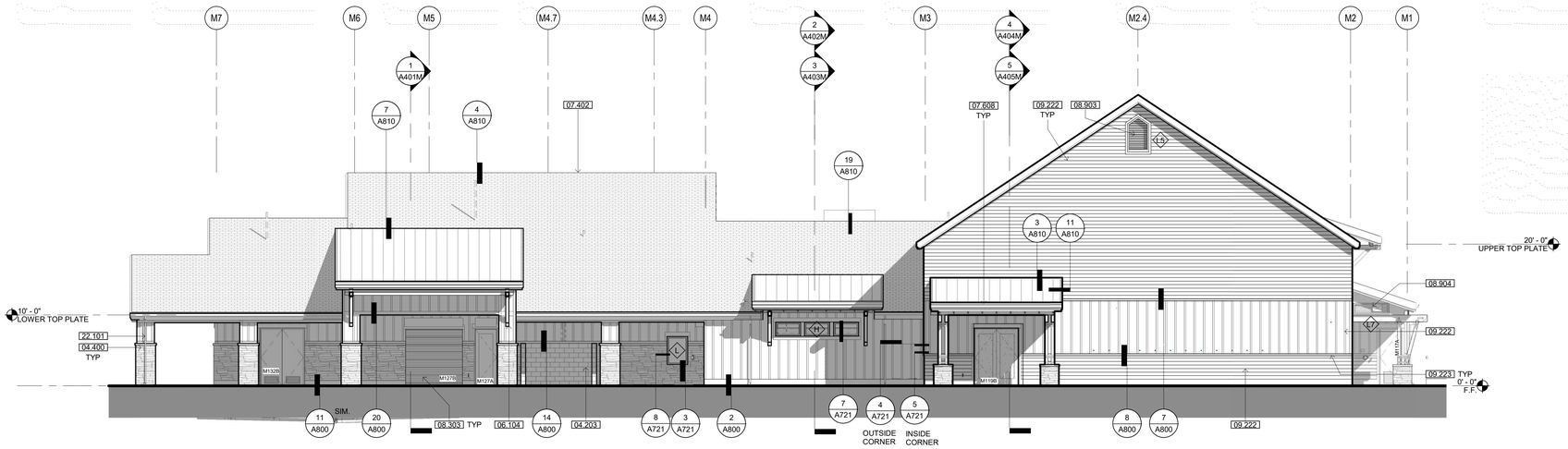

1 NORTH ELEVATION

SCALE: 1/8" = 1'-0"

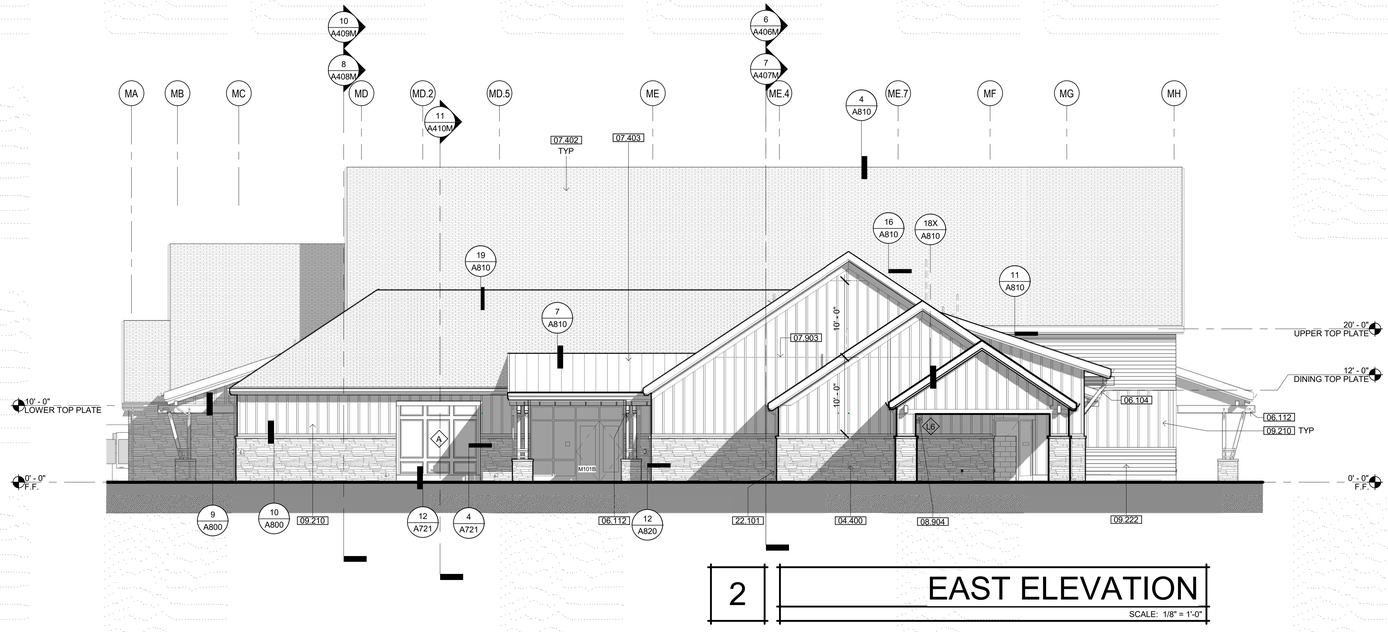

2 EAST ELEVATION

SCALE: 1/8" = 1'-0"

KEYNOTES

04.203	ADHERED SMOOTH FACE CMU VENEER
04.400	ADHERED STONE VENEER WAINSCOT
06.104	HEAVY TIMBER KNEE BRACE, PAINTED
06.112	HEAVY TIMBER BEAM, PAINTED
07.402	COMPOSITION SHINGLE ROOFING
07.403	STANDING SEAM METAL ROOF SYSTEM, FACTORY PRE-FINISHED
07.608	SEAMLESS RAINWATER GUTTER SYSTEM, PAINTED
07.903	BOARD & BATTEN SIDING JOINT FLASHING, SEE DETAIL 16/A800
08.303	OVERHEAD COILING DOOR, FACTORY PRE-FINISHED
08.903	OUTDOOR AIR INTAKE LOUVER
08.904	EXHAUST LOUVER
09.210	FIBER CEMENT BATTENS O/ FIBER CEMENT SIDING PANELS O/ RIGID INSULATION
09.222	FIBER CEMENT LAP SIDING SYSTEM O/ RIGID INSULATION
09.223	FIBER CEMENT TRIM
22.101	RAINWATER LEADER-SEE DETAILS 5 & 9/A820

EXTERIOR ELEV. LEGEND

B##X — DOOR TAG - SEE SCHEDULE, SHEET A710

X — WINDOW TAG - SEE SCHEDULE, SHEET A720

IDENTIFICATION STAMP
DIV. OF THE STATE ARCHITECT
APP: 02-118630 INC:
REVIEWED FOR
SS ☐ FLS ☐ ACS ☑
DATE: 04/13/2021

OFFICE OF THE STATE FIRE MARSHAL
APPROVED FIRE AND PANIC ONLY
Approval of this plan does not authorize or approve any omission or deviation from applicable regulations. Final approval is subject to field inspection. One set of approved plans shall be available on the project site at all times.
PERMIT NO. 20-N-2332-CP
REVIEWED BY: LEO CATAYLO, OSFM
DATE: 4 / /2021

GENERAL SERVICES
Department of General Services
State of California
Real Estate Services Division
Project Management & Development Branch
707 Third Street, Suite 4-105
West Sacramento, California 95605

NICHOLS MELBURG & ROSSETTO
ARCHITECTS + ENGINEERS
300 Knollcrest Drive
Redding, CA. 96002
(530) 222-3300 (530) 222-3538 FAX
http://www.nmrdesign.com

Copyright © 2020
All ideas, designs, arrangements and plans indicated or represented by this drawing are owned by, and the property of, NICHOLS, MELBURG and ROSSETTO and were created, evolved and developed for use on, and in conjunction with, the specified project. None of such ideas, designs, arrangements or plans shall be used by, or disclosed to any person, firm or corporation for any purpose whatsoever without the written permission of NICHOLS, MELBURG and ROSSETTO

LICENSE STAMPS

LICENSED ARCHITECT — KYLE MATTHEW — C-27504 — REN 10/31/21 — STATE OF CALIFORNIA

CONSULTANT

DRAWING STATUS
CONSTRUCTION DOCUMENTS

ISSUE

No.	Date	Description
1	10/20/2020	INITIAL PLAN REVIEW
2	01/22/2021	AGENCY RESUBMITTAL
3	03/22/2021	AGENCY RESUBMITTAL

If drawing is not 30" x 42" it is a reduced print

PROJECT
RESIDENTIAL CENTER, UKIAH: REPLACEMENT OF EXISTING RESIDENTIAL CENTER
440 EAST HILL ROAD
WILLITS, CALIFORNIA 95490
MENDOCINO COUNTY
CALIFORNIA CONSERVATION CORP

Supervisor	Designed	Drawn
KJM	DMH	Author

DSA Application No.
02-118630

SHEET TITLE
MULTI-PURPOSE EXTERIOR ELEVATIONS

DGS Project Number	NMR Project Number
00000000001826	18-6456

Reference North — Sheet Scale: 1/8" = 1'-0"

Sheet Number: A300M

ISSUE DATE
July 9, 2021

Plot Date: 2/19/2021 9:05:56 AM
File Name: BIM 360://CCC-Willits Residential Center/A_CCC-WRC-MP.rvt

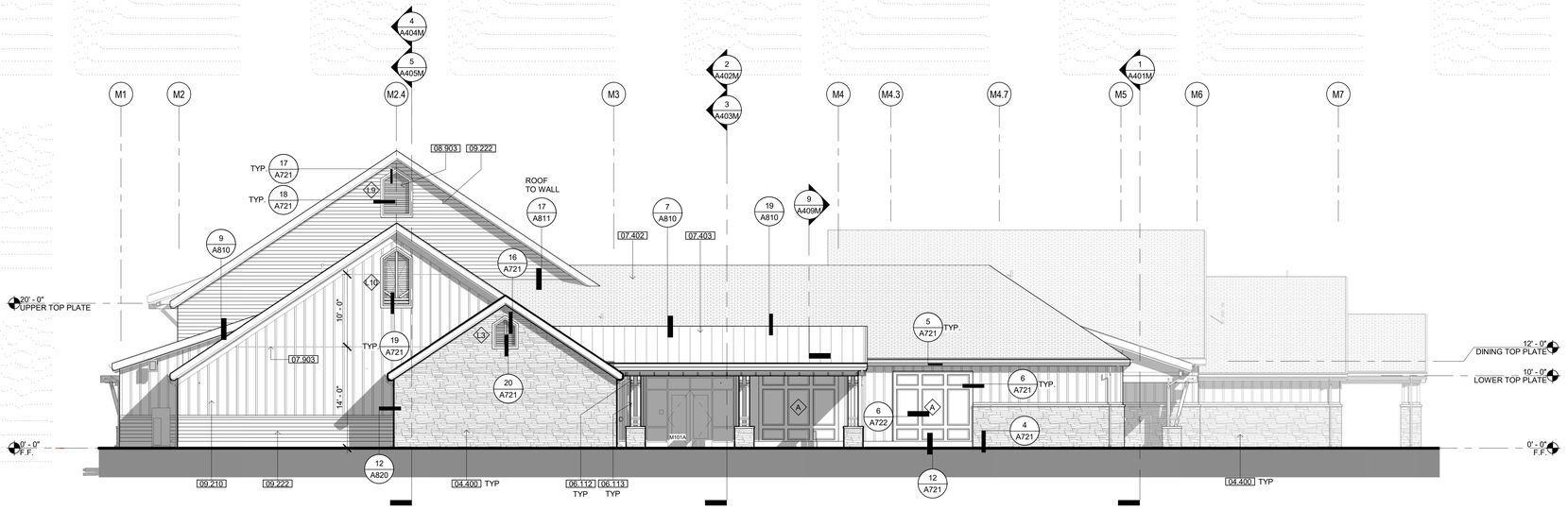

1 SOUTH ELEVATION

SCALE: 1/8" = 1'-0"

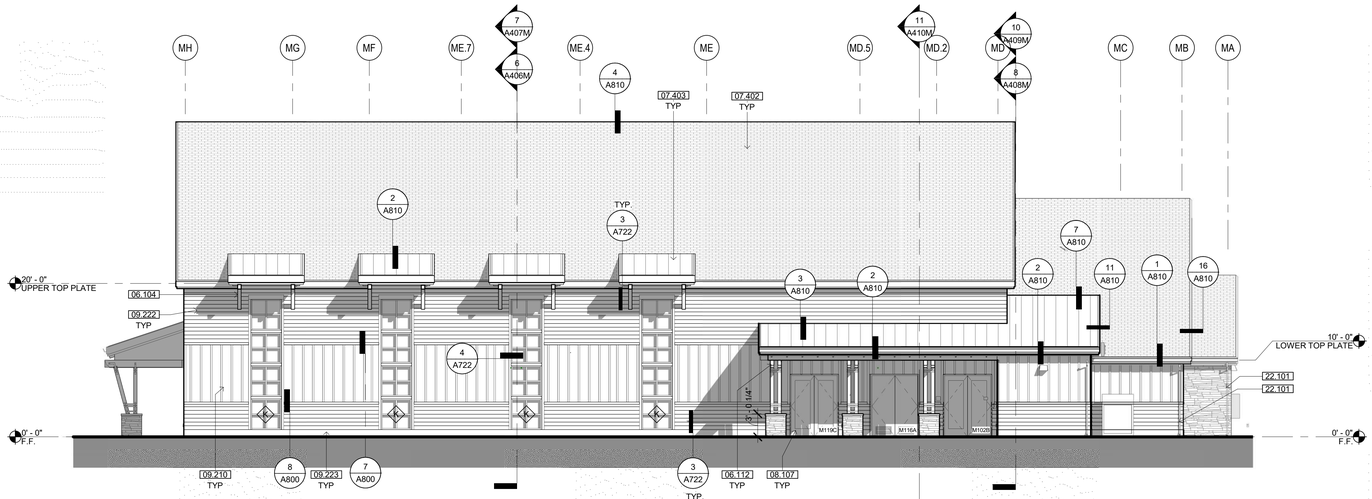

2 WEST ELEVATION

SCALE: 1/8" = 1'-0"

KEYNOTES

04.400	ADHERED STONE VENEER WAINSCOT
06.104	HEAVY TIMBER KNEE BRACE, PAINTED
06.112	HEAVY TIMBER BEAM, PAINTED
06.113	HEAVY TIMBER COLUMN, PAINTED
07.402	COMPOSITION SHINGLE ROOFING
07.403	STANDING SEAM METAL ROOF SYSTEM, FACTORY PRE-FINISHED
07.903	BOARD & BATTEN SIDING JOINT FLASHING, SEE DETAIL 16/A800
08.107	INSULATED METAL DOOR IN HOLLOW METAL FRAME, PAINTED
08.903	OUTDOOR AIR INTAKE LOUVER
09.210	FIBER CEMENT BATTENS O/ FIBER CEMENT SIDING PANELS O/ RIGID INSULATION
09.222	FIBER CEMENT LAP SIDING SYSTEM O/ RIGID INSULATION
09.223	FIBER CEMENT TRIM
22.101	RAINWATER LEADER-SEE DETAILS 5 & 9/A820

EXTERIOR ELEV. LEGEND

B##X	DOOR TAG - SEE SCHEDULE, SHEET A710
A	WINDOW TAG - SEE SCHEDULE, SHEET A720

IDENTIFICATION STAMP
DIV. OF THE STATE ARCHITECT
APP: 02-118630 INC:
REVIEWED FOR
SS ☐ FLS ☐ ACS ☑
DATE: 04/13/2021

OFFICE OF THE STATE FIRE MARSHAL
APPROVED FIRE AND PANIC ONLY
Approval of this plan does not authorize or approve any omission or deviation from applicable regulations. Final approval is subject to field inspection. One set of approved plans shall be available on the project site at all times.
PERMIT NO. 20-N-2332-CP
REVIEWED BY: LEO CATAYLO, OSFM
DATE: 4 / /2021

DGS GENERAL SERVICES
Department of General Services
State of California
Real Estate Services Division
Project Management & Development Branch
707 Third Street, Suite 4-105
West Sacramento, California 95605

NICHOLS MELBURG & ROSSETTO
ARCHITECTS + ENGINEERS
300 Knollcrest Drive
Redding, CA. 96002
(530) 222-3300 (530) 222-3538 FAX
http://www.nmrdesign.com

Copyright © 2020
All ideas, designs, arrangements and plans indicated or represented by this drawing are owned by, and the property of, NICHOLS, MELBURG and ROSSETTO and were created, evolved and developed for use on, and in conjunction with, the specified project. None of such ideas, designs, arrangements or plans shall be used by, or disclosed to any person, firm or corporation for any purpose whatsoever without the written permission of NICHOLS, MELBURG and ROSSETTO.

LICENSE STAMPS

LICENSED ARCHITECT KYLE MATTHEW [illegible] C-21504 REN. 10/31/21 STATE OF CALIFORNIA

CONSULTANT

DRAWING STATUS
CONSTRUCTION DOCUMENTS

ISSUE

No.	Date	Description
1	10/20/2020	INITIAL PLAN REVIEW
2	01/22/2021	AGENCY RESUBMITTAL
3	03/22/2021	AGENCY RESUBMITTAL

If drawing is not 30" x 42" it is a reduced print

PROJECT
RESIDENTIAL CENTER, UKIAH: REPLACEMENT OF EXISTING RESIDENTIAL CENTER
440 EAST HILL ROAD
WILLITS, CALIFORNIA 95490
MENDOCINO COUNTY
CALIFORNIA CONSERVATION CORP

Supervisor	Designed	Drawn
KJM	DMH	Author

DSA Application No.
02-118630

SHEET TITLE
MULTI-PURPOSE EXTERIOR ELEVATIONS

DGS Project Number
000000000001826
NMR Project Number
18-6456

Reference North
Sheet Scale
1/8" = 1'-0"
Sheet Number
A301M

ISSUE DATE
July 9, 2021

Plot Date: 3/19/2021 9:07:51 AM
File Name: BIM 360://CCC-Willits Residential Center/A_CCC-WRC-MP.rvt

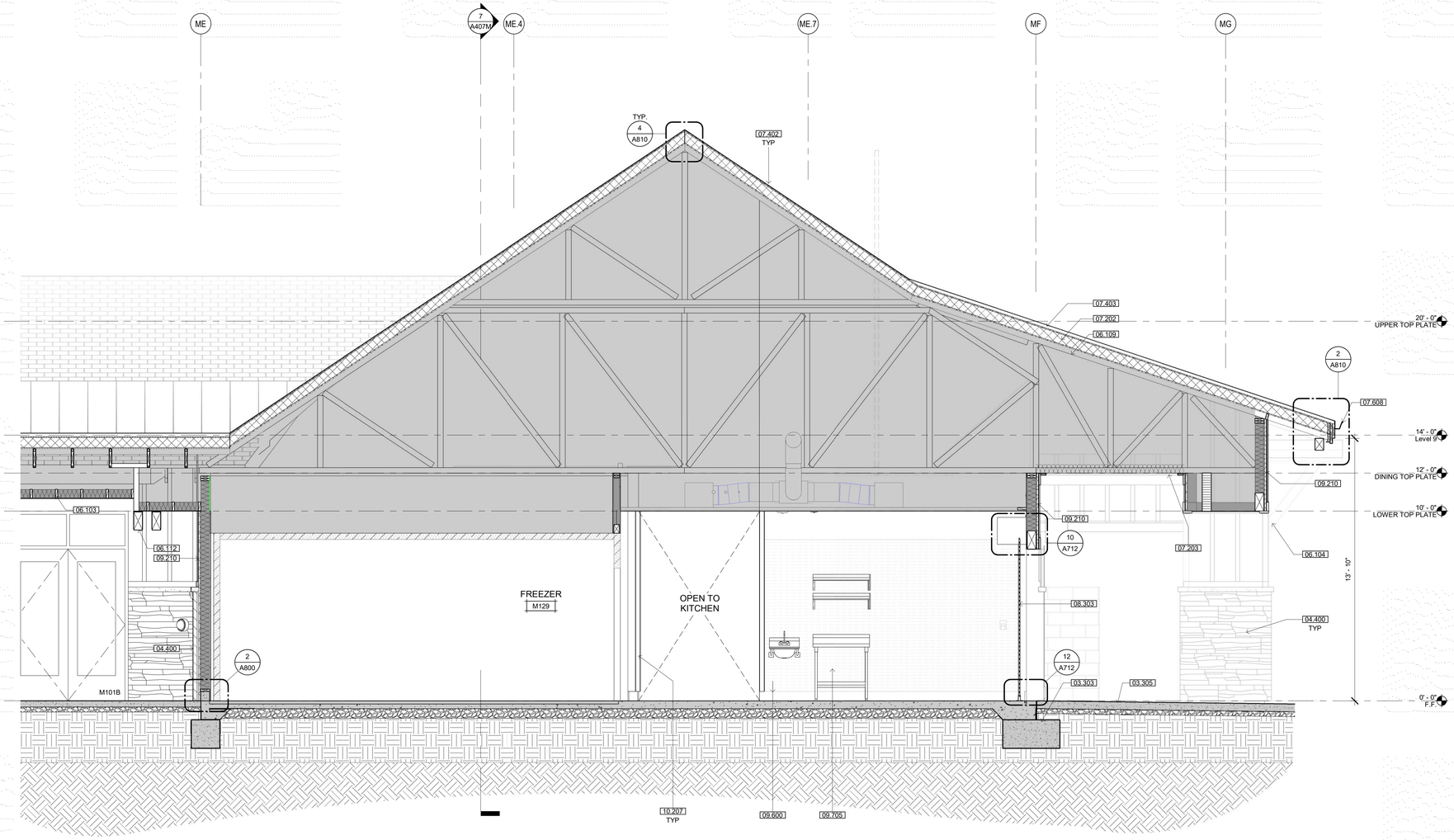

1 BUILDING SECTION

SCALE: 3/8" = 1'-0"

KEYNOTES

03.303	CONCRETE FOOTING, SEE STRUCTURAL DRAWINGS
03.305	CONCRETE WALKWAY SLOPED 1.5% AWAY FROM BUILDING
04.400	ADHERED STONE VENEER WAINSCOT
06.103	2X WOOD BLOCKING
06.104	HEAVY TIMBER KNEE BRACE, PAINTED
06.109	WOOD FRAMED TRUSS
06.112	HEAVY TIMBER BEAM, PAINTED
07.202	RIGID INSULATION
07.203	BATT INSULATION
07.402	COMPOSITION SHINGLE ROOFING
07.403	STANDING SEAM METAL ROOF SYSTEM, FACTORY PRE-FINISHED
07.608	SEAMLESS RAINWATER GUTTER SYSTEM, PAINTED
08.303	OVERHEAD COILING DOOR, FACTORY PRE-FINISHED
09.210	FIBER CEMENT BATTENS O/ FIBER CEMENT SIDING PANELS O/ RIGID INSULATION
09.600	BASE-SEE FINISH SCHEDULE
09.705	FRP PANEL-SEE FINISH SCHEDULE
10.207	CORNER GUARD - SEE FINISH SCHEDULE

IDENTIFICATION STAMP
DIV. OF THE STATE ARCHITECT
APP: 02-118630 INC:
REVIEWED FOR
SS ☐ FLS ☐ ACS ☑
DATE: 04/13/2021

OFFICE OF THE STATE FIRE MARSHAL
APPROVED FIRE AND PANIC ONLY
Approval of this plan does not authorize or approve any omission or deviation from applicable regulations. Final approval is subject to field inspection. One set of approved plans shall be available on the project site at all times.
PERMIT NO. 20 N 2332 CP
REVIEWED BY: LEO CATAYLO, OSFM
DATE: 4 / /2021

DGS GENERAL SERVICES
Department of General Services
State of California
Real Estate Services Division
Project Management & Development Branch
707 Third Street, Suite 4-105
West Sacramento, California 95605

NICHOLS MELBURG & ROSSETTO
ARCHITECTS + ENGINEERS
300 Knollcrest Drive
Redding, CA 96002
(530) 222-3300 (530) 222-3538 FAX
http://www.nmrdesign.com

Copyright © 2020
All ideas, designs, arrangements and plans indicated or represented by this drawing are owned by, and the property of, NICHOLS, MELBURG and ROSSETTO and were created, evolved and developed for use on, and in conjunction with, the specified project. None of such ideas, designs, arrangements or plans shall be used by, or disclosed to any person, firm or corporation for any purpose whatsoever without the written permission of NICHOLS, MELBURG and ROSSETTO.

LICENSE STAMPS

LICENSED ARCHITECT
KYLE MATTHEW MELBURG
C-27504
REN. 10/31/21
STATE OF CALIFORNIA

CONSULTANT

DRAWING STATUS
CONSTRUCTION DOCUMENTS

ISSUE

No.	Date	Description
1	10/20/2020	INITIAL PLAN REVIEW
2	01/22/2021	AGENCY RESUBMITTAL
3	03/22/2021	AGENCY RESUBMITTAL

If drawing is not 30" x 42" it is a reduced print

PROJECT
RESIDENTIAL CENTER, UKIAH: REPLACEMENT OF EXISTING RESIDENTIAL CENTER
440 EAST HILL ROAD
WILLITS, CALIFORNIA 95490
MENDOCINO COUNTY
CALIFORNIA CONSERVATION CORP

Supervisor	Designed	Drawn
KJM	DMH	Author

DSA Application No.
02-118630

SHEET TITLE
MULTI-PURPOSE BUILDING SECTION

DGS Project Number: 000000000001826
NMR Project Number: 18-6456

Reference North: NORTH
Sheet Scale: 3/8" = 1'-0"
Sheet Number: A401M

ISSUE DATE
July 9, 2021

Plot Date: 3/19/2021 8:56:13 AM
File Name: BIM 360://CCC-Willits Residential Center/A_CCC-WRC-MP.rvt

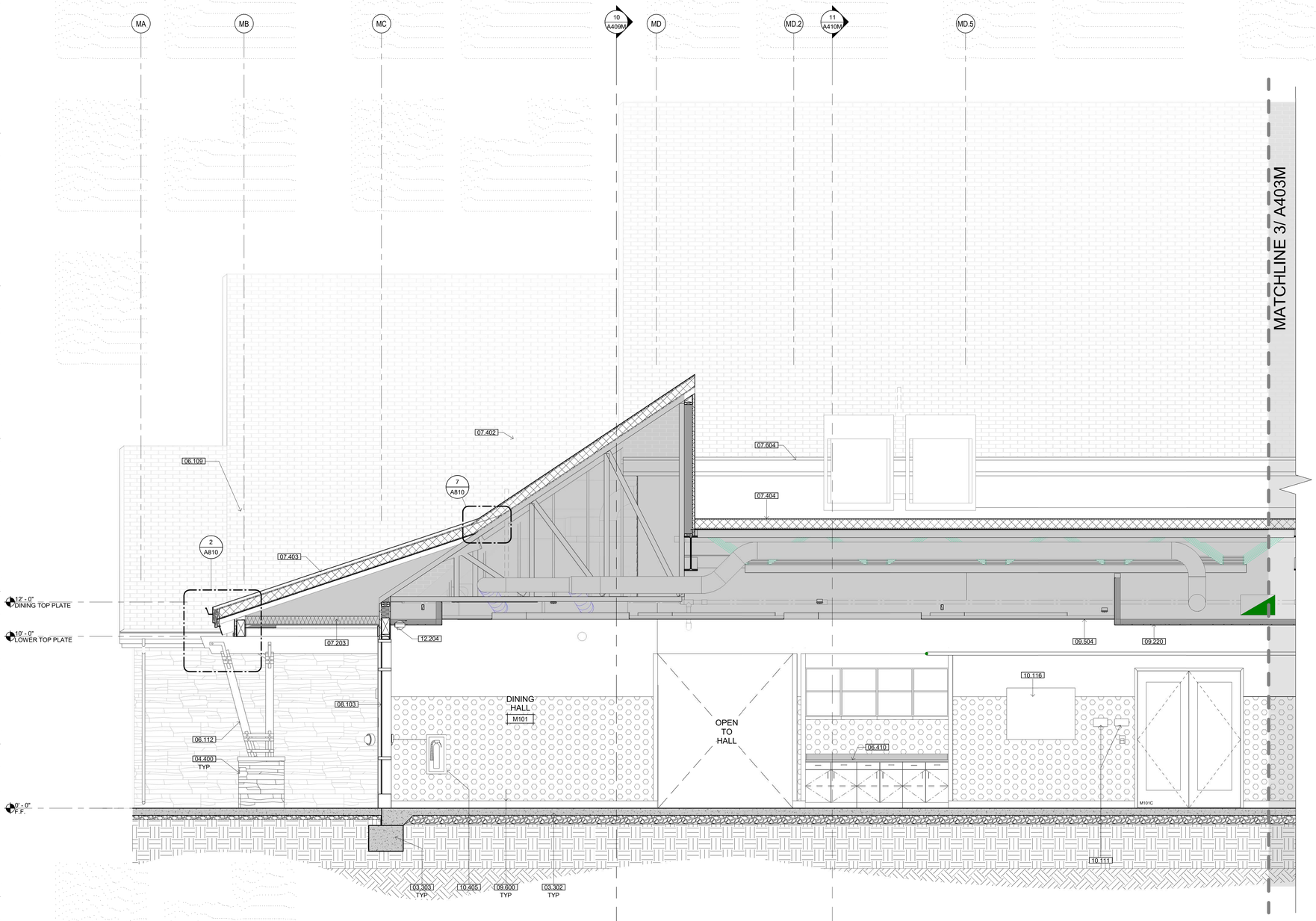

2 BUILDING SECTION

SCALE: 3/8" = 1'-0"

KEYNOTES

03.302	CONCRETE SLAB, SEE STRUCTURAL DRAWINGS
03.303	CONCRETE FOOTING, SEE STRUCTURAL DRAWINGS
04.400	ADHERED STONE VENEER WAINSCOT
06.109	WOOD FRAMED TRUSS
06.112	HEAVY TIMBER BEAM, PAINTED
06.410	SOLID SURFACE COUNTERTOP
07.203	BATT INSULATION
07.402	COMPOSITION SHINGLE ROOFING
07.403	STANDING SEAM METAL ROOF SYSTEM, FACTORY PRE-FINISHED
07.404	SINGLE PLY ROOFING
07.604	FASCIA & TRIM, PAINTED
08.103	HOLLOW METAL DOOR & FRAME-SEE DOOR SCHEDULE
09.220	GYPSUM BOARD SOFFIT
09.504	SUSPENDED WOOD CEILING
09.600	BASE-SEE FINISH SCHEDULE
10.111	SIGNAGE - SEE SIGNAGE TYPES
10.116	GLASS DISPLAY MESSAGE BOARD
10.405	RECESSED FIRE EXTINGUISHER CABINET PER DETAIL 2A/A960
12.204	SINGLE ROLL WINDOW SHADE, MOTORIZED. SEE DETAIL 17/A961

IDENTIFICATION STAMP
DIV. OF THE STATE ARCHITECT
APP: 02-118630 INC:
REVIEWED FOR
SS ☐ FLS ☐ ACS ☑
DATE: 04/13/2021

OFFICE OF THE STATE FIRE MARSHAL
APPROVED FIRE AND PANIC ONLY
Approval of this plan does not authorize or approve any omission or deviation from applicable regulations. Final approval is subject to field inspection. One set of approved plans shall be available on the project site at all times.
PERMIT NO. 20-N-2332-CP
REVIEWED BY: LEO CATAYLO, OSFM
DATE: 4 / /2021

GENERAL SERVICES
Department of General Services
State of California
Real Estate Services Division
Project Management & Development Branch
707 Third Street, Suite 4-105
West Sacramento, California 95605

NICHOLS MELBURG & ROSSETTO
ARCHITECTS + ENGINEERS
300 Knollcrest Drive
Redding, CA 96002
(530) 222-3300 (530) 222-3538 FAX
http://www.nmrdesign.com

Copyright © 2020
All ideas, designs, arrangements and plans indicated or represented by this drawing are owned by, and the property of, NICHOLS, MELBURG and ROSSETTO and were created, evolved and developed for use on, and in conjunction with, the specified project. None of such ideas, designs, arrangements or plans shall be used by, or disclosed to any person, firm or corporation for any purpose whatsoever without the written permission of NICHOLS, MELBURG and ROSSETTO

LICENSE STAMPS

LICENSED ARCHITECT KYLE MATTY C-32504 REN. 10/31/21 STATE OF CALIFORNIA

CONSULTANT

DRAWING STATUS
CONSTRUCTION DOCUMENTS

ISSUE

No.	Date	Description
1	10/20/2020	INITIAL PLAN REVIEW
2	01/22/2021	AGENCY RESUBMITTAL
3	03/22/2021	AGENCY RESUBMITTAL

If drawing is not 30" x 42" it is a reduced print

PROJECT
RESIDENTIAL CENTER, UKIAH: REPLACEMENT OF EXISTING RESIDENTIAL CENTER
440 EAST HILL ROAD
WILLITS, CALIFORNIA 95490
MENDOCINO COUNTY
CALIFORNIA CONSERVATION CORP

Supervisor	Designed	Drawn
KJM	DMH	KIP

DSA Application No.
02-118630

SHEET TITLE
MULTI-PURPOSE BUILDING SECTION

DGS Project Number: 00000000001826
NMR Project Number: 18-6456

Reference North: NORTH
Sheet Scale: 3/8" = 1'-0"
Sheet Number: A402M

ISSUE DATE
July 9, 2021

Plot Date: 5/19/2021 9:06:10 AM
File Name: 3184 3400 /SCC-Willits Residential Center/A_CCC-WRC-MP.rvt

MATCHLINE 2/ A402M

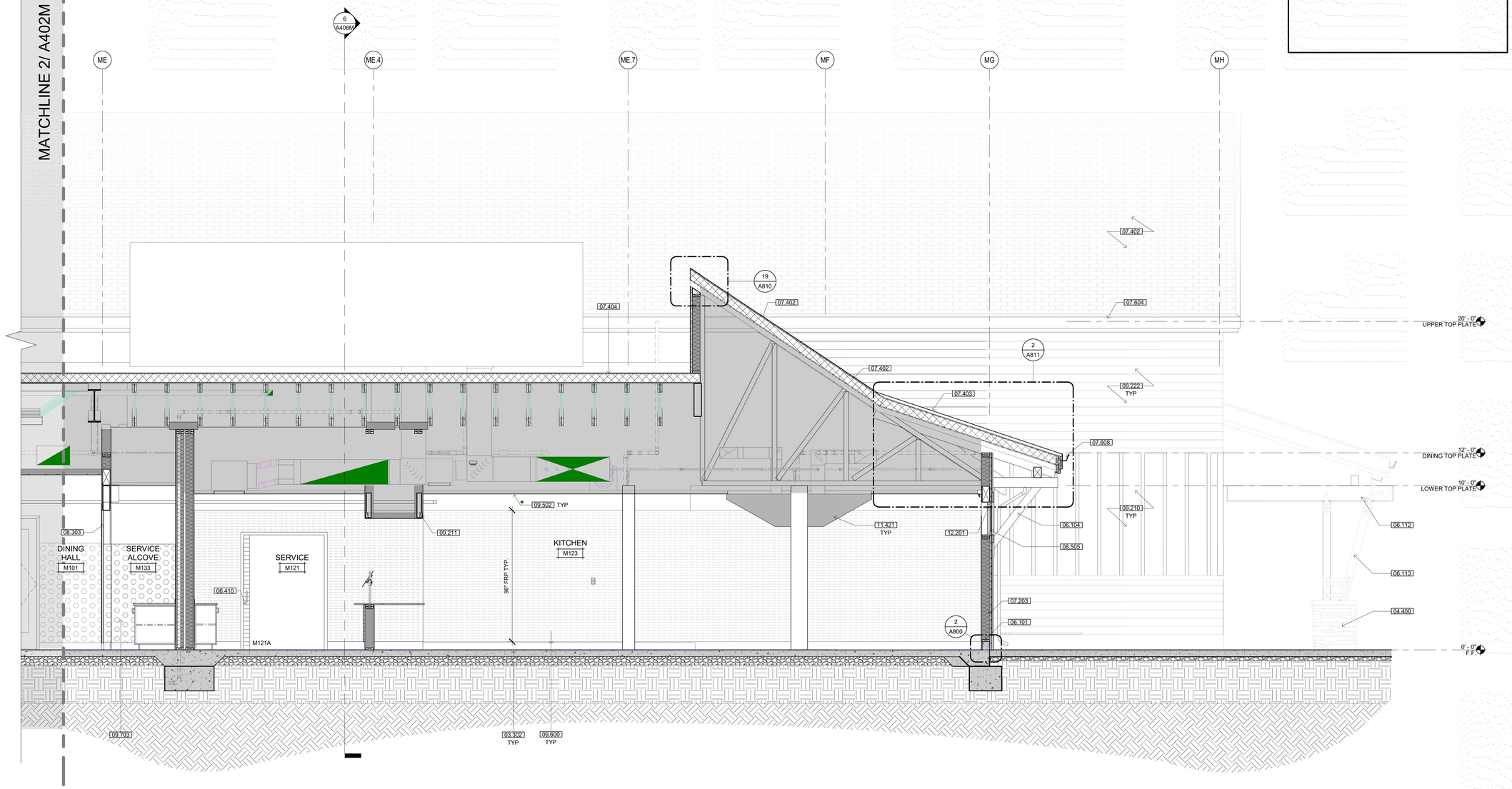

KEYNOTES

03.302	CONCRETE SLAB, SEE STRUCTURAL DRAWINGS
03.303	CONCRETE FOOTING, SEE STRUCTURAL DRAWINGS
04.400	ADHERED STONE VENEER WAINSCOT
06.101	2X FRAMING
06.104	HEAVY TIMBER KNEE BRACE, PAINTED
06.112	HEAVY TIMBER BEAM, PAINTED
06.113	HEAVY TIMBER COLUMN, PAINTED
06.410	SOLID SURFACE COUNTERTOP
07.203	BATT INSULATION
07.402	COMPOSITION SHINGLE ROOFING
07.403	STANDING SEAM METAL ROOF SYSTEM, FACTORY PRE-FINISHED
07.404	SINGLE PLY ROOFING
07.604	FASCIA & TRIM, PAINTED
07.608	SEAMLESS RAINWATER GUTTER SYSTEM, PAINTED
08.303	OVERHEAD COILING DOOR, FACTORY PRE-FINISHED
08.505	DUAL-GLAZED VINYL WINDOWS
09.210	FIBER CEMENT BATTENS O/ FIBER CEMENT SIDING PANELS O/ RIGID INSULATION
09.211	CEMENT PLASTER SOFFIT
09.222	FIBER CEMENT LAP SIDING SYSTEM O/ RIGID INSULATION
09.502	SUSPENDED ACOUSTICAL CEILING SYSTEM
09.600	BASE-SEE FINISH SCHEDULE
09.703	WALL PROTECTION-SEE FINISH SCHEDULE
11.421	EXHAUST HOOD - SEE FOOD SERVICE DRAWINGS AND SPECS
12.201	SINGLE ROLL WINDOW SHADE, MANUAL. SEE DETAIL 18/A961

3 MULTI-PURPOSE BUILDING SECTION

SCALE: 3/8" = 1'-0"

IDENTIFICATION STAMP
DIV. OF THE STATE ARCHITECT
APP: 02-118630 INC:
REVIEWED FOR
SS ☐ FLS ☐ ACS ☑
DATE: 04/13/2021

OFFICE OF THE STATE FIRE MARSHAL
APPROVED FIRE AND PANIC ONLY
Approval of this plan does not authorize or approve any omission or deviation from applicable regulations. Final approval is subject to field inspection. One set of approved plans shall be available on the project site at all times.
PERMIT NO. 20 N 2332 CP
REVIEWED BY: LEO CATAYLO, OSFM
DATE: 4 / /2021

GENERAL SERVICES
Department of General Services
State of California
Real Estate Services Division
Project Management & Development Branch
707 Third Street, Suite 4-105
West Sacramento, California 95605

NICHOLS MELBURG & ROSSETTO
ARCHITECTS + ENGINEERS
300 Knollcrest Drive
Redding, CA. 96002
(530) 222-3300 (530) 222-3538 FAX
http://www.nmrdesign.com

Copyright © 2020
All ideas, designs, arrangements and plans indicated or represented by this drawing are owned by, and the property of, NICHOLS, MELBURG and ROSSETTO and were created, evolved and developed for use on, and in conjunction with, the specified project. None of such ideas, designs, arrangements or plans shall be used by, or disclosed to any person, firm or corporation for any purpose whatsoever without the written permission of NICHOLS, MELBURG and ROSSETTO.

LICENSE STAMPS

LICENSED ARCHITECT KYLE MATTY C-31504 REN. 10/31/21 STATE OF CALIFORNIA

CONSULTANT

DRAWING STATUS
CONSTRUCTION DOCUMENTS

ISSUE

No.	Date	Description
1	10/20/2020	INITIAL PLAN REVIEW
2	01/22/2021	AGENCY RESUBMITTAL
3	03/22/2021	AGENCY RESUBMITTAL

If drawing is not 30" x 42" it is a reduced print

PROJECT
RESIDENTIAL CENTER, UKIAH: REPLACEMENT OF EXISTING RESIDENTIAL CENTER
440 EAST HILL ROAD
WILLITS, CALIFORNIA 95490
MENDOCINO COUNTY
CALIFORNIA CONSERVATION CORP

Supervisor	Designed	Drawn
KJM	DMH	Author

DSA Application No.
02-118630

SHEET TITLE
MULTI-PURPOSE BUILDING SECTION

DGS Project Number	NMR Project Number
0000000000001826	18-6456

Reference North: NORTH
Sheet Scale: 3/8" = 1'-0"
Sheet Number: A403M

ISSUE DATE
July 9, 2021

Plot Date: 5/19/2021 8:09:43 AM
File Name: BIM 360://CCC-Willits Residential Center/A_CCC-WRC-MP.rvt

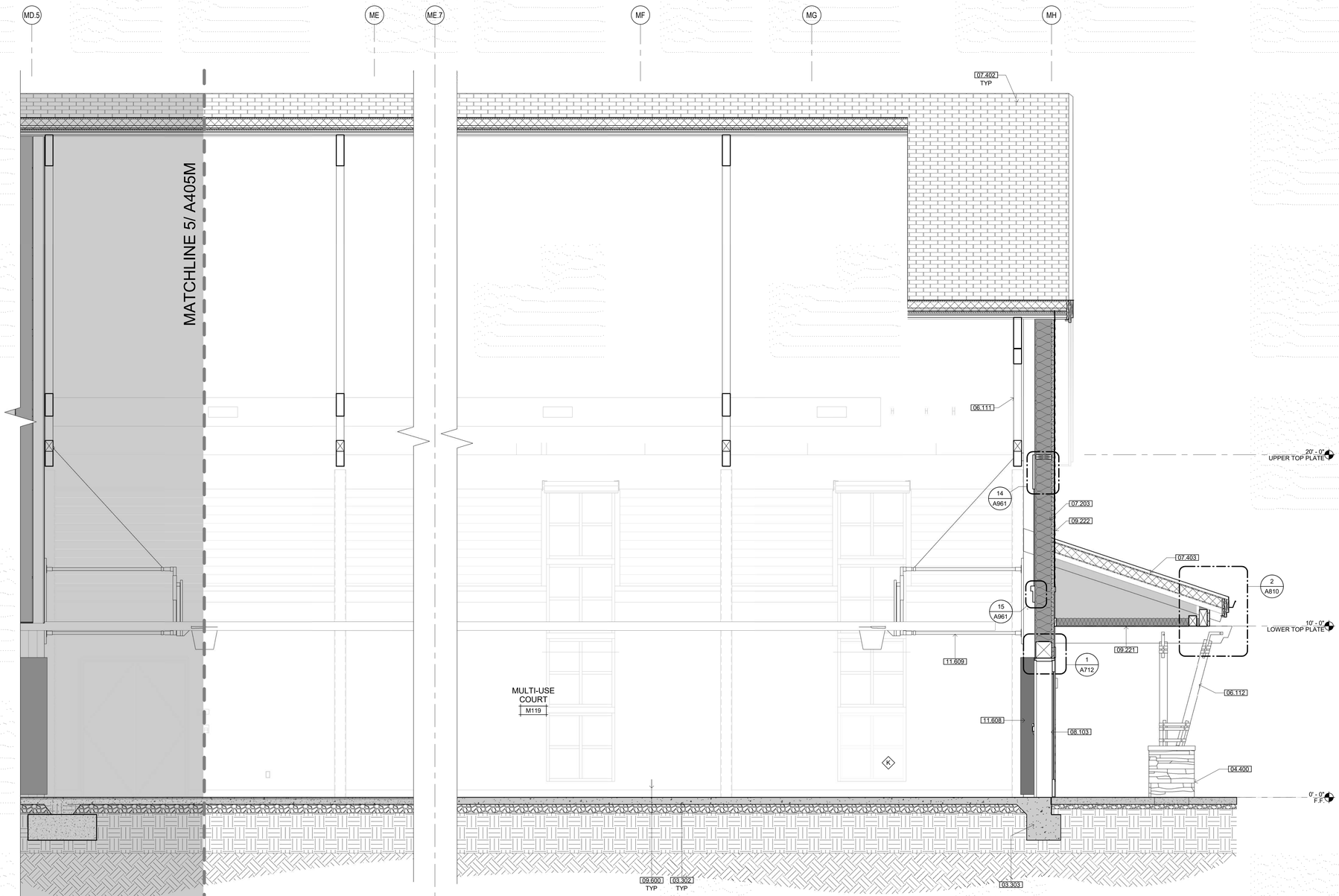

4 BUILDING SECTION

SCALE: 3/8" = 1'-0"

KEYNOTES

03.302	CONCRETE SLAB, SEE STRUCTURAL DRAWINGS
03.303	CONCRETE FOOTING, SEE STRUCTURAL DRAWINGS
04.400	ADHERED STONE VENEER WAINSCOT
06.111	GLULAM TRUSS
06.112	HEAVY TIMBER BEAM, PAINTED
07.203	BATT INSULATION
07.402	COMPOSITION SHINGLE ROOFING
07.403	STANDING SEAM METAL ROOF SYSTEM, FACTORY PRE-FINISHED
08.103	HOLLOW METAL DOOR & FRAME-SEE DOOR SCHEDULE
09.221	SOFFIT ABOVE
09.222	FIBER CEMENT LAP SIDING SYSTEM O/ RIGID INSULATION
09.600	BASE-SEE FINISH SCHEDULE
11.608	GYMNASIUM WALL PADS - SEE DETAIL 7/A980 FOR ATTACHMENT
11.609	WALL MOUNTED BASKETBALL BACKSTOP SYSTEM

IDENTIFICATION STAMP
DIV. OF THE STATE ARCHITECT
APP: 02-118630 INC:
REVIEWED FOR
SS ☐ FLS ☐ ACS ☑
DATE: 04/13/2021

OFFICE OF THE STATE FIRE MARSHAL
APPROVED FIRE AND PANIC ONLY
Approval of this plan does not authorize or approve any omission or deviation from applicable regulations. Final approval is subject to field inspection. One set of approved plans shall be available on the project site at all times.
PERMIT NO. 20-N-2332-CP
REVIEWED BY: LEO CATAYLO, OSFM
DATE: 4 / /2021

DGS GENERAL SERVICES
Department of General Services
State of California
Real Estate Services Division
Project Management & Development Branch
707 Third Street, Suite 4-105
West Sacramento, California 95605

NICHOLS MELBURG & ROSSETTO
ARCHITECTS + ENGINEERS
300 Knollcrest Drive
Redding, CA. 96002
(530) 222-3300 (530) 222-3538 FAX
http://www.nmrdesign.com

Copyright © 2020
All ideas, designs, arrangements and plans indicated or represented by this drawing are owned by, and the property of, NICHOLS, MELBURG and ROSSETTO and were created, evolved and developed for use on, and in conjunction with, the specified project. None of such ideas, designs, arrangements or plans shall be used by, or disclosed to any person, firm or corporation for any purpose whatsoever without the written permission of NICHOLS, MELBURG and ROSSETTO

LICENSE STAMPS

LICENSED ARCHITECT KYLE MATTSON C-21504 REN. 10/31/21 STATE OF CALIFORNIA

CONSULTANT

DRAWING STATUS
CONSTRUCTION DOCUMENTS

ISSUE

No.	Date	Description
1	10/20/2020	INITIAL PLAN REVIEW
2	01/22/2021	AGENCY RESUBMITTAL
3	03/22/2021	AGENCY RESUBMITTAL

If drawing is not 30" x 42" it is a reduced print

PROJECT
RESIDENTIAL CENTER, UKIAH: REPLACEMENT OF EXISTING RESIDENTIAL CENTER
440 EAST HILL ROAD
WILLITS, CALIFORNIA 95490
MENDOCINO COUNTY
CALIFORNIA CONSERVATION CORP

Supervisor	Designed	Drawn
KJM	DMH	Author

DSA Application No.
02-118630

SHEET TITLE
MULTI-PURPOSE BUILDING SECTION

DGS Project Number: 000000000001826
NMR Project Number: 18-6456

Reference North: NORTH
Sheet Scale: 3/8" = 1'-0"
Sheet Number: A404M

ISSUE DATE
July 9, 2021

Plot Date: 3/19/2021 5:10:16 AM
File Name: BIM 360://CCC-Willits Residential Center/A_CCC-WRC-MP.rvt

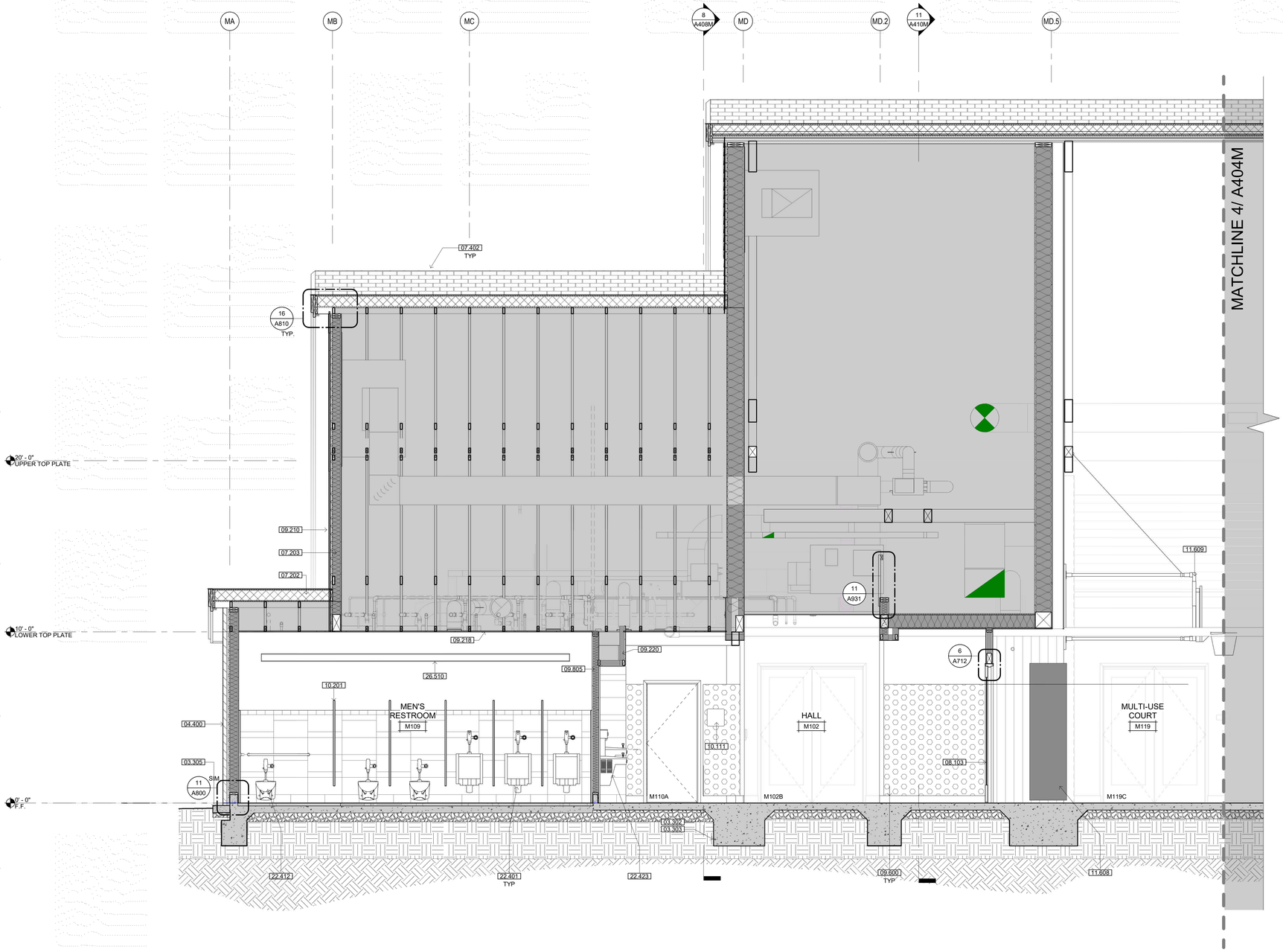

5 BUILDING SECTION

SCALE: 3/8" = 1'-0"

KEYNOTES

03.302	CONCRETE SLAB, SEE STRUCTURAL DRAWINGS
03.303	CONCRETE FOOTING, SEE STRUCTURAL DRAWINGS
03.305	CONCRETE WALKWAY SLOPED 1.5% AWAY FROM BUILDING
04.400	ADHERED STONE VENEER WAINSCOT
07.202	RIGID INSULATION
07.203	BATT INSULATION
07.402	COMPOSITION SHINGLE ROOFING
08.103	HOLLOW METAL DOOR & FRAME-SEE DOOR SCHEDULE
09.210	FIBER CEMENT BATTENS O/ FIBER CEMENT SIDING PANELS O/ RIGID INSULATION
09.218	GYPSUM BOARD CEILING ATTACHED TO BOTTOM CORD OF ROOF TRUSS
09.220	GYPSUM BOARD SOFFIT
09.600	BASE-SEE FINISH SCHEDULE
09.805	ACOUSTIC BATT INSULATION
10.111	SIGNAGE - SEE SIGNAGE TYPES
10.201	TOILET COMPARTMENT - OVERHEAD BRACE - SEE 8/A960
11.608	GYMNASIUM WALL PADS - SEE DETAIL 7/A980 FOR ATTACHMENT
11.609	WALL MOUNTED BASKETBALL BACKSTOP SYSTEM
22.401	URINAL - SEE PLUMBING DRAWINGS
22.412	ACCESSIBLE WALL HUNG TOILET
22.423	ACCESSIBLE DRINKING FOUNTAIN HI-LO WITH BOTTLE FILL-SEE DETAIL 4/G212
26.510	WALL MOUNTED UP/DOWN LIGHT FIXTURE

IDENTIFICATION STAMP
DIV. OF THE STATE ARCHITECT
APP: 02-118630 INC:
REVIEWED FOR
SS ☐ FLS ☐ ACS ☑
DATE: 04/13/2021

OFFICE OF THE STATE FIRE MARSHAL
APPROVED FIRE AND PANIC ONLY
Approval of this plan does not authorize or approve any omission or deviation from applicable regulations. Final approval is subject to field inspection. One set of approved plans shall be available on the project site at all times.
PERMIT NO. 20-N-2332-CP
REVIEWED BY: LEO CATAYLO, OSFM
DATE: 4 / /2021

DGS GENERAL SERVICES
Department of General Services
State of California
Real Estate Services Division
Project Management & Development Branch
707 Third Street, Suite 4-105
West Sacramento, California 95605

NICHOLS MELBURG & ROSSETTO
ARCHITECTS + ENGINEERS
300 Knollcrest Drive
Redding, CA. 96002
(530) 222-3300 (530) 222-3538 FAX
http://www.nmrdesign.com

Copyright © 2020
All ideas, designs, arrangements and plans indicated or represented by this drawing are owned by, and the property of, NICHOLS, MELBURG and ROSSETTO and were created, evolved and developed for use on, and in conjunction with, the specified project. None of such ideas, designs, arrangements or plans shall be used by, or disclosed to any person, firm or corporation for any purpose whatsoever without the written permission of NICHOLS, MELBURG and ROSSETTO

LICENSE STAMPS

LICENSED ARCHITECT KYLE MATTHEW ROSSETTO C-21504 REN 10/31/21 STATE OF CALIFORNIA

CONSULTANT

DRAWING STATUS
CONSTRUCTION DOCUMENTS

ISSUE

No.	Date	Description
1	10/20/2020	INITIAL PLAN REVIEW
2	01/22/2021	AGENCY RESUBMITTAL
3	03/22/2021	AGENCY RESUBMITTAL

If drawing is not 30" x 42" it is a reduced print

PROJECT
RESIDENTIAL CENTER, UKIAH: REPLACEMENT OF EXISTING RESIDENTIAL CENTER
440 EAST HILL ROAD
WILLITS, CALIFORNIA 95490
MENDOCINO COUNTY
CALIFORNIA CONSERVATION CORP

Supervisor	Designed	Drawn
KJM	DMH	Author

DSA Application No.
02-118630

SHEET TITLE
MULTI-PURPOSE BUILDING SECTION

DGS Project Number	NMR Project Number
00000000001826	18-6456

Reference North: NORTH
Sheet Scale: 3/8" = 1'-0"
Sheet Number: A405M

ISSUE DATE
July 9, 2021

Plot Date: 3/19/2021 8:10:51 AM
File Name: BM 3062 /CCC\ Willits Residential Center\A_CCC-WRC-MP.rvt

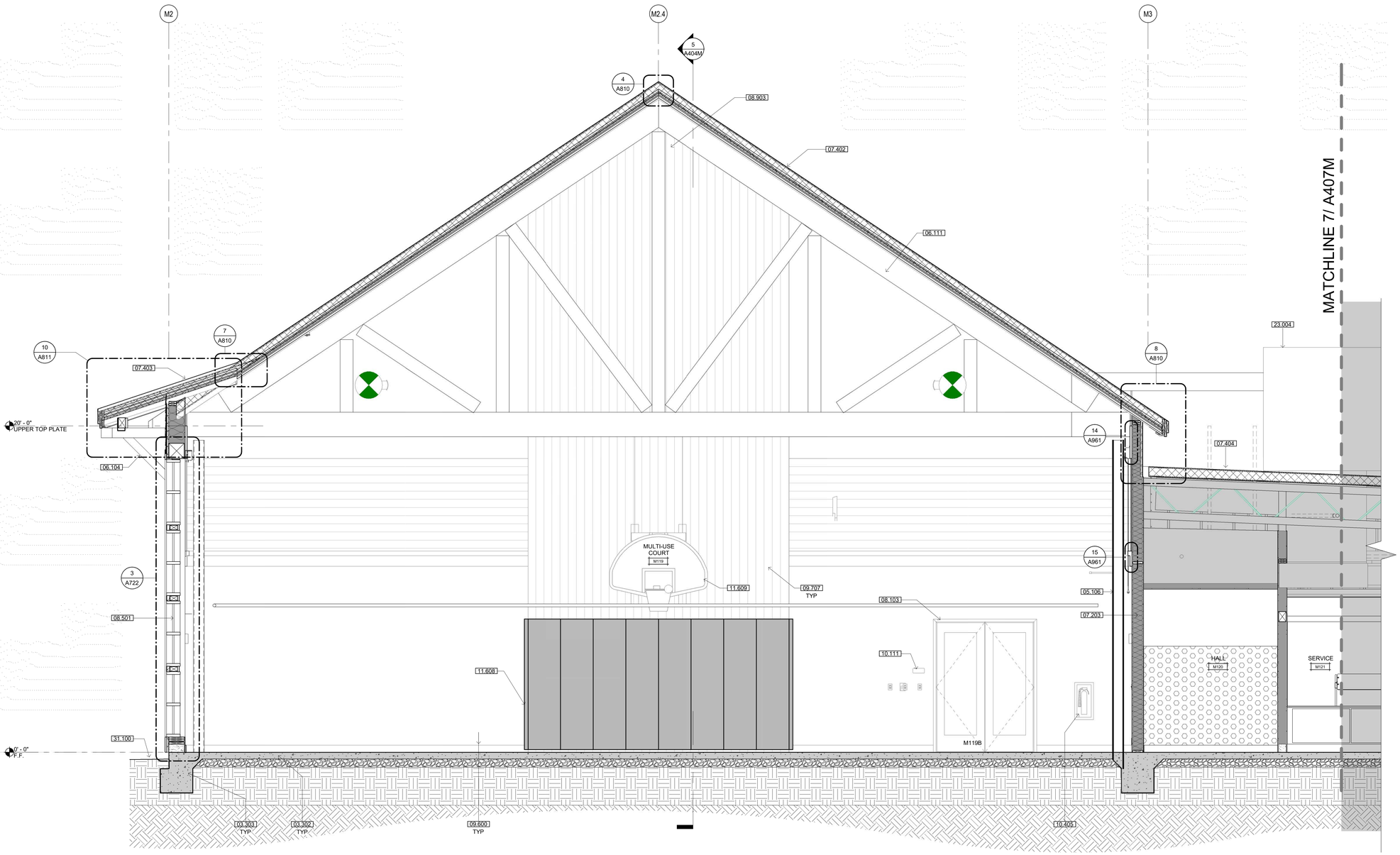

6 BUILDING SECTION

SCALE: 3/8" = 1'-0"

KEYNOTES

03.302	CONCRETE SLAB, SEE STRUCTURAL DRAWINGS
03.303	CONCRETE FOOTING, SEE STRUCTURAL DRAWINGS
05.106	STEEL COLUMN - SEE STRUCTURAL
06.104	HEAVY TIMBER KNEE BRACE, PAINTED
06.111	GLULAM TRUSS
07.203	BATT INSULATION
07.402	COMPOSITION SHINGLE ROOFING
07.403	STANDING SEAM METAL ROOF SYSTEM, FACTORY PRE-FINISHED
07.404	SINGLE PLY ROOFING
08.103	HOLLOW METAL DOOR & FRAME-SEE DOOR SCHEDULE
08.501	HOLLOW METAL FRAME WINDOW-SEE SCHEDULE
08.903	OUTDOOR AIR INTAKE LOUVER
09.600	BASE-SEE FINISH SCHEDULE
09.707	RECLAIMED WOOD PLANK WALL SIDING O/ GYP. BD.
10.111	SIGNAGE - SEE SIGNAGE TYPES
10.405	RECESSED FIRE EXTINGUISHER CABINET PER DETAIL 2/AA960
11.608	GYMNASIUM WALL PADS - SEE DETAIL 7/A980 FOR ATTACHMENT
11.609	WALL MOUNTED BASKETBALL BACKSTOP SYSTEM
23.004	HVAC UNIT
31.100	APPROXIMATE FINISH GRADE

IDENTIFICATION STAMP
DIV. OF THE STATE ARCHITECT
APP: 02-118630 INC:
REVIEWED FOR
SS ☐ FLS ☐ ACS ☑
DATE: 04/13/2021

OFFICE OF THE STATE FIRE MARSHAL
APPROVED FIRE AND PANIC ONLY
Approval of this plan does not authorize or approve any omission or deviation from applicable regulations. Final approval is subject to field inspection. One set of approved plans shall be available on the project site at all times.
PERMIT NO. 2019-2332-CP
REVIEWED BY: LEO CATAYLO, OSFM
DATE: 4 / /2021

GENERAL SERVICES
Department of General Services
State of California
Real Estate Services Division
Project Management & Development Branch
707 Third Street, Suite 4-105
West Sacramento, California 95605

NICHOLS MELBURG & ROSSETTO
ARCHITECTS + ENGINEERS
300 Knollcrest Drive
Redding, CA 96002
(530) 222-3300 (530) 222-3538 FAX
http://www.nmrdesign.com

Copyright © 2020
All ideas, designs, arrangements and plans indicated or represented by this drawing are owned by, and the property of, NICHOLS, MELBURG and ROSSETTO and were created, evolved and developed for use on, and in conjunction with, the specified project. None of such ideas, designs, arrangements or plans shall be used by, or disclosed to any person, firm or corporation for any purpose whatsoever without the written permission of NICHOLS, MELBURG and ROSSETTO.

LICENSE STAMPS

LICENSED ARCHITECT KYLE MATTY C-32504 REN. 10/31/21 STATE OF CALIFORNIA

CONSULTANT

DRAWING STATUS
CONSTRUCTION DOCUMENTS

ISSUE

No.	Date	Description
1	10/20/2020	INITIAL PLAN REVIEW
2	01/22/2021	AGENCY RESUBMITTAL
3	03/22/2021	AGENCY RESUBMITTAL

If drawing is not 30" x 42" it is a reduced print

PROJECT
RESIDENTIAL CENTER, UKIAH: REPLACEMENT OF EXISTING RESIDENTIAL CENTER
440 EAST HILL ROAD
WILLITS, CALIFORNIA 95490
MENDOCINO COUNTY
CALIFORNIA CONSERVATION CORP

Supervisor	Designed	Drawn
KJM	DMH	Author

DSA Application No.
02-118630

SHEET TITLE
MULTI-PURPOSE BUILDING SECTION

DGS Project Number
00000000001826
NMR Project Number
18-6456

Reference North
Sheet Scale
3/8" = 1'-0"
Sheet Number
A406M

ISSUE DATE
July 9, 2021

Plot Date: 5/19/2021 9:11:50 AM
File Name: BIM 360://CCC-Willits Residential Center/A_CCC-WRC-MP.rvt

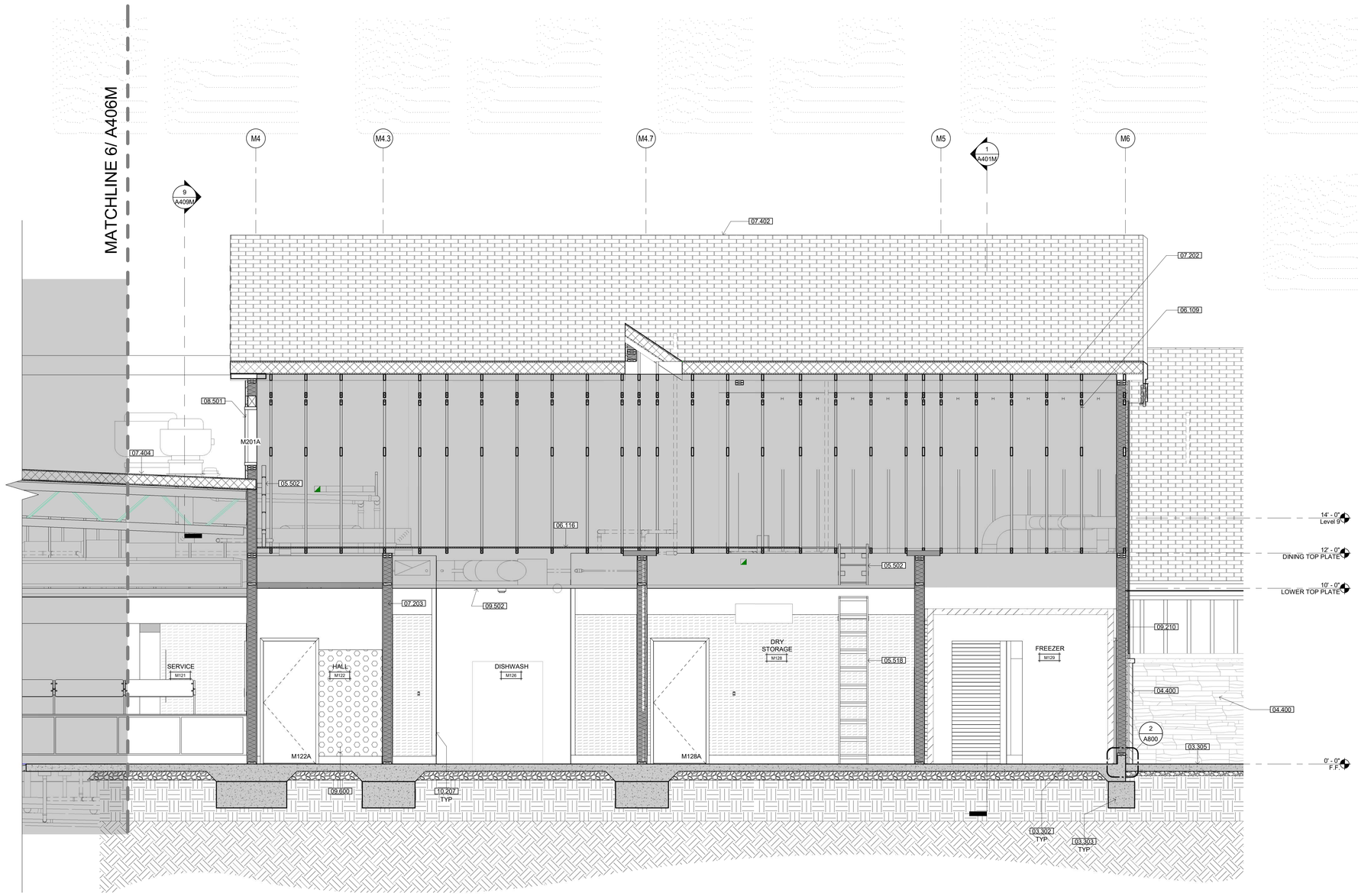

7 BUILDING SECTION

SCALE: 3/8" = 1'-0"

KEYNOTES

03.302	CONCRETE SLAB, SEE STRUCTURAL DRAWINGS
03.303	CONCRETE FOOTING, SEE STRUCTURAL DRAWINGS
03.305	CONCRETE WALKWAY SLOPED 1.5% AWAY FROM BUILDING
04.400	ADHERED STONE VENEER WAINSCOT
05.502	ATTIC ACCESS LADDER - SEE DETAIL 8/A931
05.518	PIVOTAL SHIPS LADDER - SEE DETAIL 3/A931
06.109	WOOD FRAMED TRUSS
06.116	PLYWOOD ATTIC ACCESS PLATFORM, SEE DETAILS 4/A931
07.202	RIGID INSULATION
07.203	BATT INSULATION
07.402	COMPOSITION SHINGLE ROOFING
07.404	SINGLE PLY ROOFING
08.501	HOLLOW METAL FRAME WINDOW-SEE SCHEDULE
09.210	FIBER CEMENT BATTENS O/ FIBER CEMENT SIDING PANELS O/ RIGID INSULATION
09.502	SUSPENDED ACOUSTICAL CEILING SYSTEM
09.600	BASE-SEE FINISH SCHEDULE
10.207	CORNER GUARD - SEE FINISH SCHEDULE

IDENTIFICATION STAMP
DIV. OF THE STATE ARCHITECT
APP: 02-118630 INC:
REVIEWED FOR
SS ☐ FLS ☐ ACS ☑
DATE: 04/13/2021

OFFICE OF THE STATE FIRE MARSHAL
APPROVED FIRE AND PANIC ONLY
Approval of this plan does not authorize or approve any omission or deviation from applicable regulations. Final approval is subject to field inspection. One set of approved plans shall be available on the project site at all times.
PERMIT NO. 20-N-2332-CP
REVIEWED BY: LEO CATAYLO, OSFM
DATE: 4 / /2021

GENERAL SERVICES
Department of General Services
State of California
Real Estate Services Division
Project Management & Development Branch
707 Third Street, Suite 4-105
West Sacramento, California 95605

NICHOLS MELBURG & ROSSETTO
ARCHITECTS + ENGINEERS
300 Knollcrest Drive
Redding, CA. 96002
(530) 222-3300 (530) 222-3538 FAX
http://www.nmrdesign.com

Copyright © 2020
All ideas, designs, arrangements and plans indicated or represented by this drawing are owned by, and the property of, NICHOLS, MELBURG and ROSSETTO and were created, evolved and developed for use on, and in conjunction with, the specified project. None of such ideas, designs, arrangements or plans shall be used by, or disclosed to any person, firm or corporation for any purpose whatsoever without the written permission of NICHOLS, MELBURG and ROSSETTO

LICENSE STAMPS

LICENSED ARCHITECT KYLE MATTHEW ROSSETTO C-27504 REN. 10/31/21 STATE OF CALIFORNIA

CONSULTANT

DRAWING STATUS
CONSTRUCTION DOCUMENTS

ISSUE

No.	Date	Description
1	10/20/2020	INITIAL PLAN REVIEW
2	01/22/2021	AGENCY RESUBMITTAL
3	03/22/2021	AGENCY RESUBMITTAL

If drawing is not 30" x 42" it is a reduced print

PROJECT
RESIDENTIAL CENTER, UKIAH: REPLACEMENT OF EXISTING RESIDENTIAL CENTER
440 EAST HILL ROAD
WILLITS, CALIFORNIA 95490
MENDOCINO COUNTY
CALIFORNIA CONSERVATION CORP

Supervisor	Designed	Drawn
KJM	DMH	Author

DSA Application No.
02-118630

SHEET TITLE
MULTI-PURPOSE BUILDING SECTION

DGS Project Number	NMR Project Number
000000000001826	18-6456

Reference North: NORTH
Sheet Scale: 3/8" = 1'-0"
Sheet Number: A407M

ISSUE DATE
July 9, 2021

Plot Date: 5/19/2021 9:21:56 AM
File Name: BIM 360://CCC-Willits Residential Center/A_CCC-WRC-MP.rvt

KEYNOTES

03.302	CONCRETE SLAB, SEE STRUCTURAL DRAWINGS
06.108	FIRE TREATED SHEATHING
06.109	WOOD FRAMED TRUSS
06.112	HEAVY TIMBER BEAM, PAINTED
07.202	RIGID INSULATION
07.402	COMPOSITION SHINGLE ROOFING
07.403	STANDING SEAM METAL ROOF SYSTEM, FACTORY PRE-FINISHED
07.604	FASCIA & TRIM, PAINTED
08.103	HOLLOW METAL DOOR & FRAME-SEE DOOR SCHEDULE
08.903	OUTDOOR AIR INTAKE LOUVER
09.218	GYPSUM BOARD CEILING ATTACHED TO BOTTOM CORD OF ROOF TRUSS
09.222	FIBER CEMENT LAP SIDING SYSTEM O/ RIGID INSULATION
09.223	FIBER CEMENT TRIM
09.300	WALL TILE-SEE FINISH SCHEDULE
09.504	SUSPENDED WOOD CEILING
09.600	BASE-SEE FINISH SCHEDULE
09.705	FRP PANEL-SEE FINISH SCHEDULE

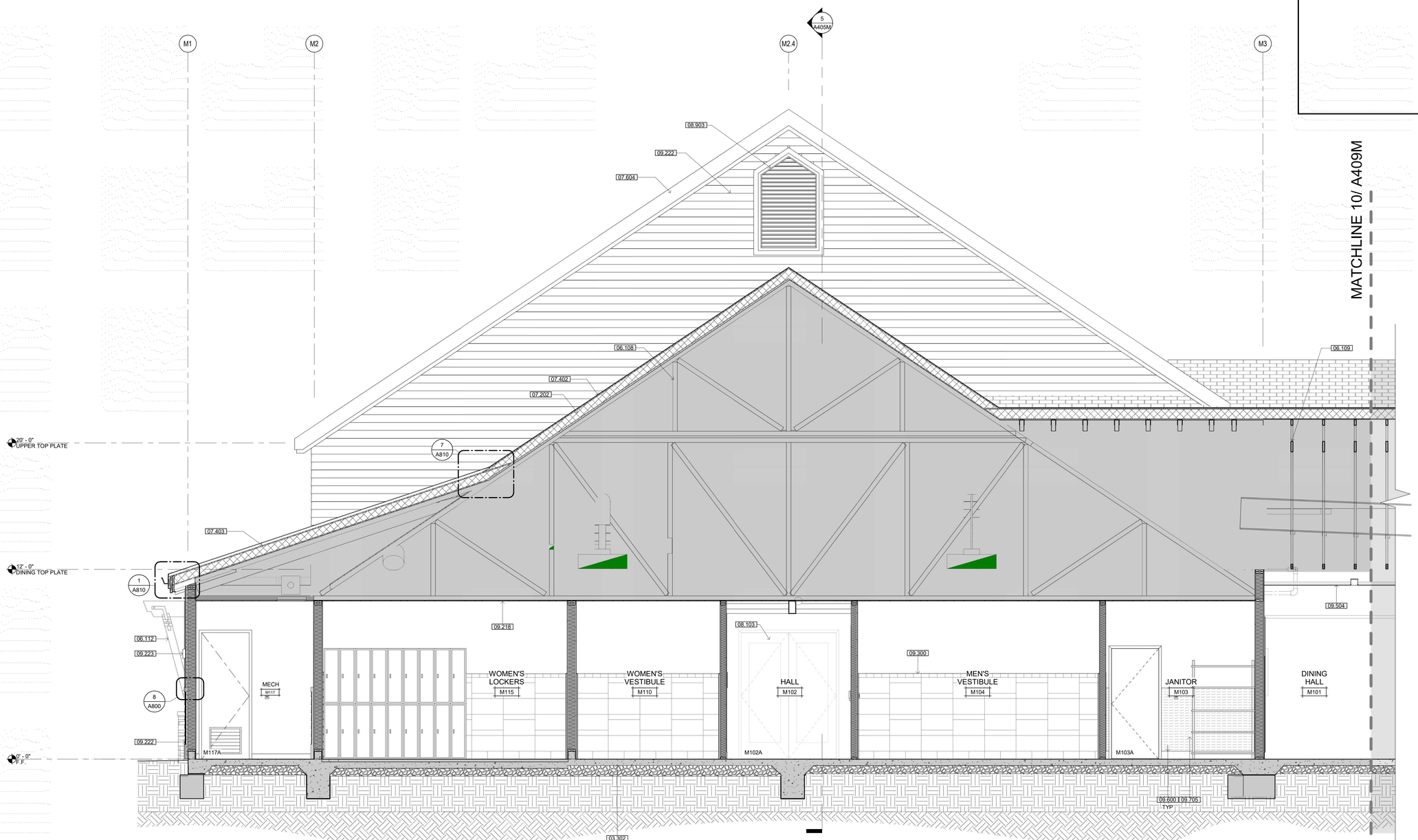

8 BUILDING SECTION

SCALE: 3/8" = 1'-0"

IDENTIFICATION STAMP
DIV. OF THE STATE ARCHITECT
APP: 02-118630 INC:
REVIEWED FOR
SS ☐ FLS ☐ ACS ☑
DATE: 04/13/2021

OFFICE OF THE STATE FIRE MARSHAL
APPROVED FIRE AND PANIC ONLY
Approval of this plan does not authorize or approve any omission or deviation from applicable regulations. Final approval is subject to field inspection. One set of approved plans shall be available on the project site at all times.
PERMIT NO. 20-N-2332-CP
REVIEWED BY: LEO CATAYLO, OSFM
DATE: 4 / /2021

GENERAL SERVICES
Department of General Services
State of California
Real Estate Services Division
Project Management & Development Branch
707 Third Street, Suite 4-105
West Sacramento, California 95605

NICHOLS MELBURG & ROSSETTO
ARCHITECTS + ENGINEERS
300 Knollcrest Drive
Redding, CA. 96002
(530) 222-3300 (530) 222-3538 FAX
http://www.nmrdesign.com

Copyright © 2020
All ideas, designs, arrangements and plans indicated or represented by this drawing are owned by, and the property of, NICHOLS, MELBURG and ROSSETTO and were created, evolved and developed for use on, and in conjunction with, the specified project. None of such ideas, designs, arrangements or plans shall be used by, or disclosed to any person, firm or corporation for any purpose whatsoever without the written permission of NICHOLS, MELBURG and ROSSETTO.

LICENSE STAMPS

LICENSED ARCHITECT
KYLE MATTHEW ROSSETTO
C-31504
REN. 10/31/21
STATE OF CALIFORNIA

CONSULTANT

DRAWING STATUS
CONSTRUCTION DOCUMENTS

ISSUE

No.	Date	Description
1	10/20/2020	INITIAL PLAN REVIEW
2	01/22/2021	AGENCY RESUBMITTAL
3	03/22/2021	AGENCY RESUBMITTAL

If drawing is not 30" x 42" it is a reduced print

PROJECT
RESIDENTIAL CENTER, UKIAH: REPLACEMENT OF EXISTING RESIDENTIAL CENTER
440 EAST HILL ROAD
WILLITS, CALIFORNIA 95490
MENDOCINO COUNTY
CALIFORNIA CONSERVATION CORP

Supervisor	Designed	Drawn
KJM	DMH	Author

DSA Application No.
02-118630

SHEET TITLE
MULTI-PURPOSE BUILDING SECTION

DGS Project Number: 00000000001826
NMR Project Number: 18-6456

Reference North
Sheet Scale: 3/8" = 1'-0"
Sheet Number: A408M

ISSUE DATE
July 9, 2021

Plot Date: 3/19/2021 8:12:40 AM
File Name: BM 3063 /CCC Willits Residential Center/A_CCC-WRC-MP.rvt

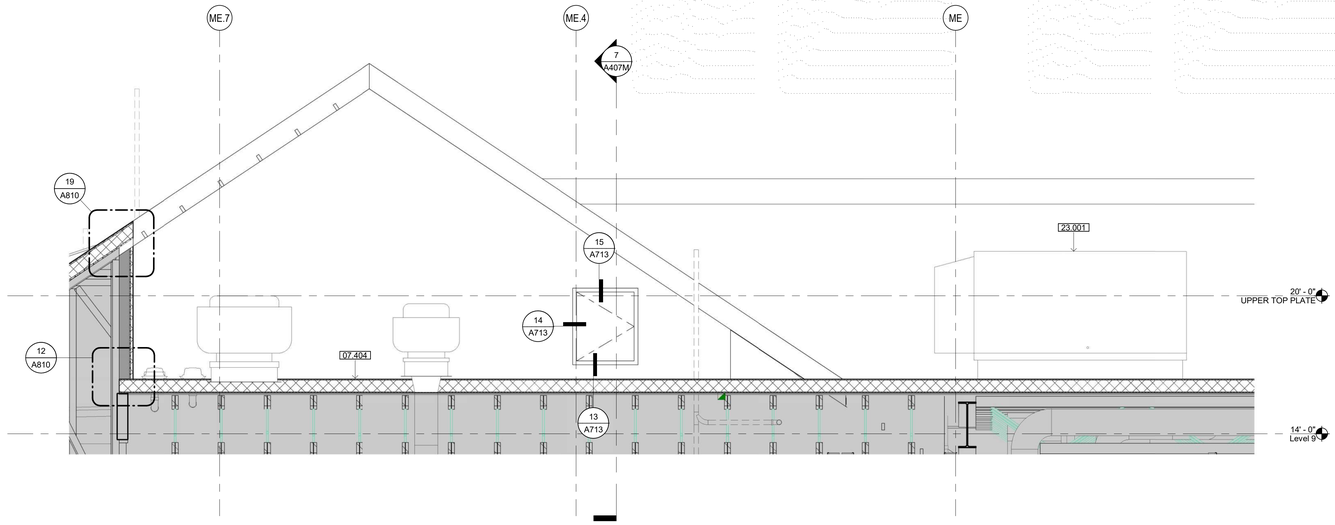

9 BUILDING SECTION

SCALE: 3/8" = 1'-0"

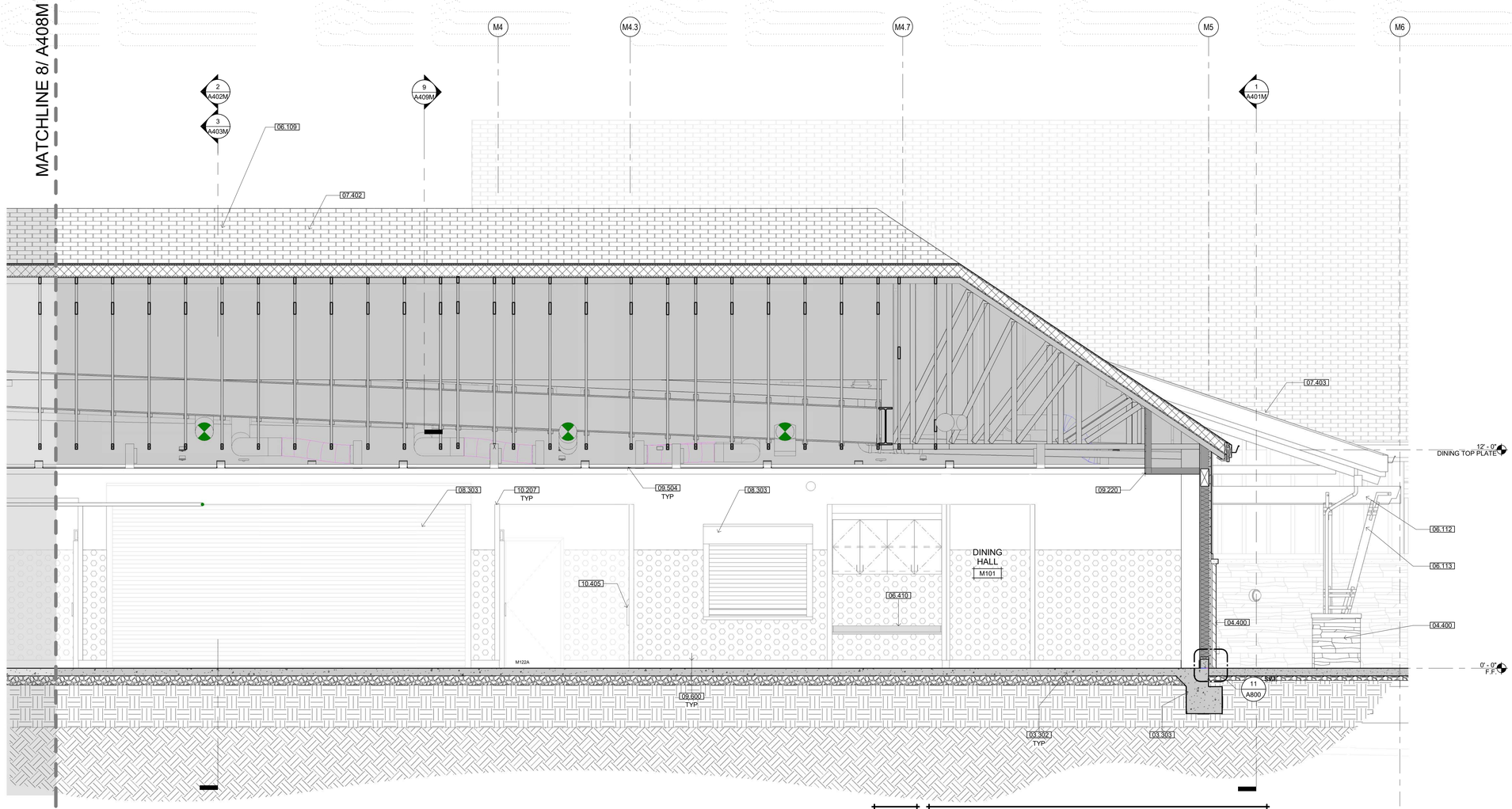

10 BUILDING SECTION

SCALE: 3/8" = 1'-0"

KEYNOTES

03.302	CONCRETE SLAB, SEE STRUCTURAL DRAWINGS
03.303	CONCRETE FOOTING, SEE STRUCTURAL DRAWINGS
04.400	ADHERED STONE VENEER WAINSCOT
06.109	WOOD FRAMED TRUSS
06.112	HEAVY TIMBER BEAM, PAINTED
06.113	HEAVY TIMBER COLUMN, PAINTED
06.410	SOLID SURFACE COUNTERTOP
07.402	COMPOSITION SHINGLE ROOFING
07.403	STANDING SEAM METAL ROOF SYSTEM, FACTORY PRE-FINISHED
07.404	SINGLE PLY ROOFING
08.303	OVERHEAD COILING DOOR, FACTORY PRE-FINISHED
09.220	GYPSUM BOARD SOFFIT
09.504	SUSPENDED WOOD CEILING
09.600	BASE-SEE FINISH SCHEDULE
10.207	CORNER GUARD - SEE FINISH SCHEDULE
10.405	RECESSED FIRE EXTINGUISHER CABINET PER DETAIL 2/A/A960
23.001	MECHANICAL EQUIPMENT - SEE MECHANICAL DRAWINGS

IDENTIFICATION STAMP
DIV. OF THE STATE ARCHITECT
APP: 02-118630 INC:
REVIEWED FOR
SS ☐ FLS ☐ ACS ☑
DATE: 04/13/2021

OFFICE OF THE STATE FIRE MARSHAL
APPROVED FIRE AND PANIC ONLY
Approval of this plan does not authorize or approve any omission or deviation from applicable regulations. Final approval is subject to field inspection. One set of approved plans shall be available on the project site at all times.
PERMIT NO. 20-N-2332-CP
REVIEWED BY: LEO CATAYLO, OSFM
DATE: 4 / /2021

GENERAL SERVICES
Department of General Services
State of California
Real Estate Services Division
Project Management & Development Branch
707 Third Street, Suite 4-105
West Sacramento, California 95605

NICHOLS MELBURG & ROSSETTO
ARCHITECTS + ENGINEERS
300 Knollcrest Drive
Redding, CA. 96002
(530) 222-3300 (530) 222-3538 FAX
http://www.nmrdesign.com

Copyright © 2020
All ideas, designs, arrangements and plans indicated or represented by this drawing are owned by, and the property of, NICHOLS, MELBURG and ROSSETTO and were created, evolved and developed for use on, and in conjunction with, the specified project. None of such ideas, designs, arrangements or plans shall be used by, or disclosed to any person, firm or corporation for any purpose whatsoever without the written permission of NICHOLS, MELBURG and ROSSETTO

LICENSE STAMPS

LICENSED ARCHITECT KYLE MATTY C-21504 RENEWAL 10/31/21 STATE OF CALIFORNIA

CONSULTANT

DRAWING STATUS
CONSTRUCTION DOCUMENTS

ISSUE

No.	Date	Description
1	10/20/2020	INITIAL PLAN REVIEW
2	01/22/2021	AGENCY RESUBMITTAL
3	03/22/2021	AGENCY RESUBMITTAL

If drawing is not 30" x 42" it is a reduced print

PROJECT
RESIDENTIAL CENTER, UKIAH: REPLACEMENT OF EXISTING RESIDENTIAL CENTER
440 EAST HILL ROAD
WILLITS, CALIFORNIA 95490
MENDOCINO COUNTY
CALIFORNIA CONSERVATION CORP

Supervisor	Designed	Drawn
KJM	DMH	Author

DSA Application No.
02-118630

SHEET TITLE
MULTI-PURPOSE BUILDING SECTION

DGS Project Number	NMR Project Number
000000000001826	18-6456

Reference North: NORTH
Sheet Scale: 3/8" = 1'-0"
Sheet Number: A409M

ISSUE DATE
July 9, 2021

Plot Date: 5/19/2021 9:13:37 AM
File Name: 8184 3600 (CCC)-Willits Residential Center/A_CCC-WRC-MP.rvt

KEYNOTES

06.112	HEAVY TIMBER BEAM, PAINTED
06.113	HEAVY TIMBER COLUMN, PAINTED
06.115	PLATFORM FOR HVAC EQUIPMENT
06.410	SOLID SURFACE COUNTERTOP
07.203	BATT INSULATION
07.402	COMPOSITION SHINGLE ROOFING
07.403	STANDING SEAM METAL ROOF SYSTEM, FACTORY PRE-FINISHED
07.404	SINGLE PLY ROOFING
09.220	GYPSUM BOARD SOFFIT
09.224	GYPSUM BOARD CEILING ATTACHED TO BOTTOM OF HVAC PLATFORM FRAMING
09.226	FIBER CEMENT SOFFIT PANELING
09.504	SUSPENDED WOOD CEILING
09.703	WALL PROTECTION-SEE FINISH SCHEDULE
10.116	GLASS DISPLAY MESSAGE BOARD
10.207	CORNER GUARD - SEE FINISH SCHEDULE

11 MULTI-PURPOSE BUILDING SECTION

SCALE: 3/8" = 1'-0"

IDENTIFICATION STAMP
DIV. OF THE STATE ARCHITECT
APP: 02-118630 INC:
REVIEWED FOR
SS ☐ FLS ☐ ACS ☑
DATE: 04/13/2021

OFFICE OF THE STATE FIRE MARSHAL
APPROVED FIRE AND PANIC ONLY
Approval of this plan does not authorize or approve any omission or deviation from applicable regulations. Final approval is subject to field inspection. One set of approved plans shall be available on the project site at all times.
PERMIT NO. 20-N-2332-CP
REVIEWED BY: LEO CATAYLO, OSFM
DATE: 4 / /2021

GENERAL SERVICES
Department of General Services
State of California
Real Estate Services Division
Project Management & Development Branch
707 Third Street, Suite 4-105
West Sacramento, California 95605

NICHOLS MELBURG & ROSSETTO
ARCHITECTS + ENGINEERS
300 Knollcrest Drive
Redding, CA. 96002
(530) 222-3300 (530) 222-3538 FAX
http://www.nmrdesign.com

Copyright © 2020
All ideas, designs, arrangements and plans indicated or represented by this drawing are owned by, and the property of, NICHOLS, MELBURG and ROSSETTO and were created, evolved and developed for use on, and in conjunction with, the specified project. None of such ideas, designs, arrangements or plans shall be used by, or disclosed to any person, firm or corporation for any purpose whatsoever without the written permission of NICHOLS, MELBURG and ROSSETTO

LICENSE STAMPS

LICENSED ARCHITECT KYLE MATTHEW ROSSETTO C-21504 REN. 10/31/21 STATE OF CALIFORNIA

CONSULTANT

DRAWING STATUS
CONSTRUCTION DOCUMENTS

ISSUE

No.	Date	Description
1	10/20/2020	INITIAL PLAN REVIEW
2	01/22/2021	AGENCY RESUBMITTAL
3	03/22/2021	AGENCY RESUBMITTAL

If drawing is not 30" x 42" it is a reduced print

PROJECT
RESIDENTIAL CENTER, UKIAH: REPLACEMENT OF EXISTING RESIDENTIAL CENTER
440 EAST HILL ROAD
WILLITS, CALIFORNIA 95490
MENDOCINO COUNTY
CALIFORNIA CONSERVATION CORP

Supervisor	Designed	Drawn
KJM	DMH	Author

DSA Application No.
02-118630

SHEET TITLE
MULTI-PURPOSE BUILDING SECTION

DGS Project Number	NMR Project Number
000000000001826	18-6456

Reference North: NORTH
Sheet Scale: 3/8" = 1'-0"
Sheet Number: A410M

ISSUE DATE
July 9, 2021

Plot Date: 3/19/2021 9:14:01 AM
File Name: 8IM 360 /CCC-Willits Residential Center/A_CCC-WRC-MP.rvt

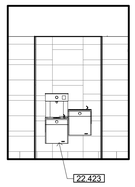

1 M102 - HALL - SOUTH
1/4" = 1'-0"

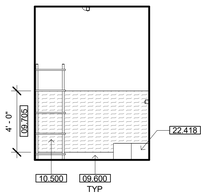

2 M103 - JANITOR'S CLOSET - EAST
1/4" = 1'-0"

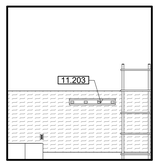

3 M103 - JANITOR'S CLOSET - SOUTH
1/4" = 1'-0"

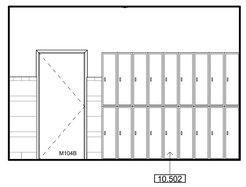

4 M105 - MEN'S LOCKER ROOM - NORTH
1/4" = 1'-0"

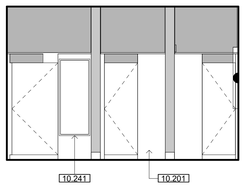

5 M105 - MEN'S LOCKER ROOM - SOUTH
1/4" = 1'-0"

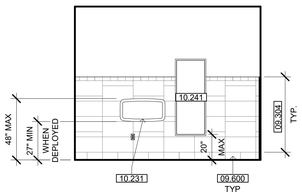

6 M105 - MEN'S LOCKER ROOM - WEST
1/4" = 1'-0"

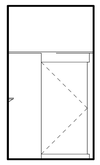

7 M106 - SHOWER - NORTH
1/4" = 1'-0"

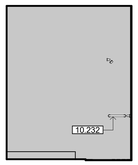

8 M106 - SHOWER - EAST
1/4" = 1'-0"

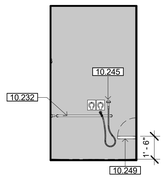

9 M106 - SHOWER - SOUTH
1/4" = 1'-0"

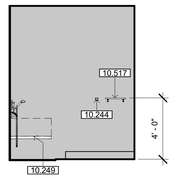

10 M106 - SHOWER - WEST
1/4" = 1'-0"

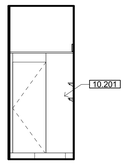

11 M108 - SHOWER - NORTH
1/4" = 1'-0"

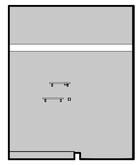

12 M108 - SHOWER - EAST
1/4" = 1'-0"

13 M108 - SHOWER - SOUTH
1/4" = 1'-0"

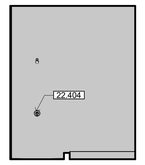

14 M108 - SHOWER - WEST
1/4" = 1'-0"

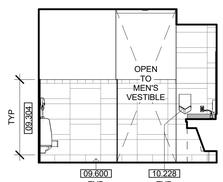

15 M109 - MEN'S RESTROOM - NORTH
1/4" = 1'-0"

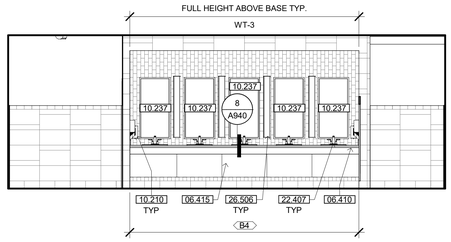

16 M109 - MEN'S RESTROOM - EAST
1/4" = 1'-0"

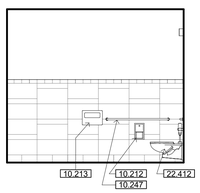

17 M109 - MEN'S RESTROOM - SOUTH
1/4" = 1'-0"

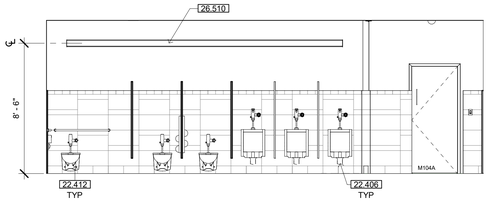

18 M109 - MEN'S RESTROOM - WEST
1/4" = 1'-0"

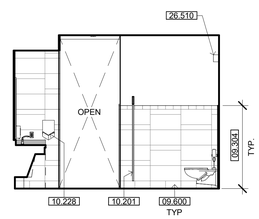

19 M111 - WOMEN'S RESTROOM - NORTH
1/4" = 1'-0"

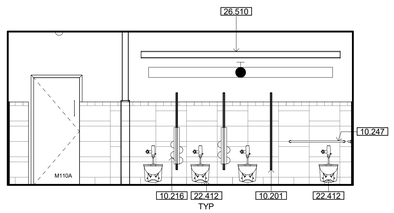

20 M111 - WOMEN'S RESTROOM - EAST
1/4" = 1'-0"

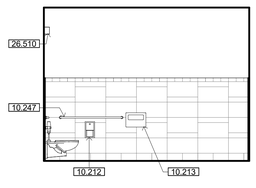

21 M111 - WOMEN'S RESTROOM - SOUTH
1/4" = 1'-0"

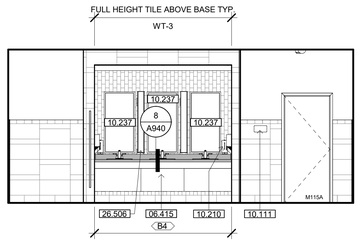

22 M111 - WOMEN'S RESTROOM - WEST
1/4" = 1'-0"

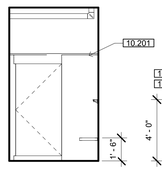

23 M114 - SHOWER - NORTH
1/4" = 1'-0"

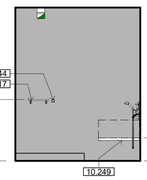

24 M114 - SHOWER - EAST
1/4" = 1'-0"

25 M114 - SHOWER - SOUTH
1/4" = 1'-0"

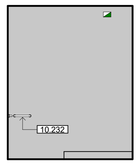

26 M114 - SHOWER - WEST
1/4" = 1'-0"

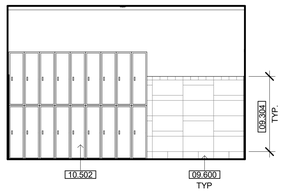

27 M115 - WOMEN'S LOCKERS - NORTH
1/4" = 1'-0"

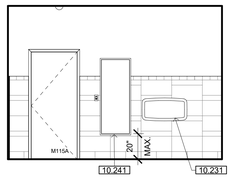

28 M115 - WOMEN'S LOCKERS - EAST
1/4" = 1'-0"

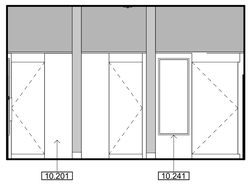

29 M115 - WOMEN'S LOCKERS - SOUTH
1/4" = 1'-0"

KEYNOTES

06.410	SOLID SURFACE COUNTERTOP
06.415	ACCESSIBLE BASE CABINET WITH COUNTERTOP WITH SPLASH ON 3 SIDES
09.304	TILE WAINSCOT-SEE FINISH SCHEDULE
09.600	BASE-SEE FINISH SCHEDULE
09.705	FRP PANEL-SEE FINISH SCHEDULE
10.111	SIGNAGE - SEE SIGNAGE TYPES
10.201	TOILET COMPARTMENT - OVERHEAD BRACE - SEE 8/A960
10.210	SOAP DISPENSER
10.212	SEMI-RECESSED TOILET TISSUE DISPENSER
10.213	SURFACE MOUNTED TOILET SEAT COVER DISPENSER
10.216	RECESSED COMBINATION TOILET TISSUE DISPENSER AND SEAT COVER DISPENSER
10.228	HAND DRYER
10.231	SURFACE MOUNTED FOLD-DOWN BABY CHANGING STATION
10.232	GRAB BAR - SEE DETAIL 4/A960
10.237	24"W X 48"H MIRROR
10.241	MIRROR, 24"W X 60"H FULL LENGTH, COMPLYING WITH CBC 803.6
10.244	GARMENT HOOK
10.245	AT ACCESSIBLE SHOWER, PROVIDE: STAINLESS STEEL SHOWER ROD WITH CURTAIN AND S.S. HANGERS, FOLD-DOWN SEAT, 24"/36" CORNER GRAB BARS, RECESSED S.S. SOAP DISH AND 60" LONG FLEXIBLE SHOWER SPRAY HOSE
10.247	GRAB BARS, 48" AT SIDE & 42" AT BACK - SEE DETAIL 4/A960
10.249	FOLD DOWN SHOWER SEAT
10.500	METAL STORAGE SHELVING UNIT
10.502	2-TIER LOCKERS
10.517	STAINLESS STEEL SHELF, 4" MAX. PROJECTION
11.203	COMBINATION UTILITY SHELF WITH MOP AND BROOM HOLDER
22.404	SHOWER - SEE PLUMBING DRAWINGS
22.406	ACCESSIBLE URINAL - SEE PLUMBING DRAWINGS
22.407	ACCESSIBLE SINK - SEE PLUMBING DRAWINGS
22.412	ACCESSIBLE WALL HUNG TOILET
22.418	JANITOR SINK-SEE PLUMBING DRAWINGS
22.423	ACCESSIBLE DRINKING FOUNTAIN HI-LO WITH BOTTLE FILL-SEE DETAIL 4/G212
26.506	WALL MOUNTED LIGHT FIXTURE-CENTER BETWEEN MIRROR
26.510	RECESSED LIGHT FIXTURE

INTERIOR ELEV. LEGEND

- ###X — CASEWORK TAG - SEE SHEET A940
- X — SIGNAGE TAG - SEE SHEET A965
- B##X — DOOR TAG - SEE SCHEDULE, SHEET A710
- X — WINDOW TAG - SEE SCHEDULE, SHEET A720
- GYPSUM BOARD - PAINT
- WALL TILE WT-1/2 OVER CEMENTITIOUS BACKER BOARD
- WALL TILE WT-3 OVER CEMENTITIOUS BACKER BOARD
- WALL PROTECTION OVER GYPSUM BOARD
- FIBER REINFORCED PLASTIC (FRP) OVER GYPSUM BOARD
- PAINTED MDO PLYWOOD
- CUSTOM DIGITAL WALL COVERING OVER GYPSUM BOARD - SEE DETAIL -/--
- ACOUSTIC WALL PANEL OVER GYPSUM BOARD - SEE DETAIL A980/5
- RECLAIMED WOOD PLANKS OVER GYPSUM BOARD - SEE DETAIL A980/14
- FULL HEIGHT SOLID SURFACE WALL PANELS

INTERIOR ELEV. GEN. NOTES

A. GENERAL CONTRACTOR TO PROVIDE STRUCTURAL SUPPORT, BACKING AND/OR METAL REINFORCEMENT IN STUD WALLS AT ALL CASEWORK, CABINETS, SHELVING, EQUIPMENT ETC. REFER TO G212 & G213 FOR TYPICAL MOUNTING HEIGHTS AND ARRANGEMENTS OF COMMON SPECIALTY ITEMS INCLUDING SHOWERS AND TOILET ROOMS.

B. SEE SHEET 18/A960 FOR TYP. ACCESSORY MOUNTING

C. SEE MECHANICAL, ELECTRICAL & LOW VOLTAGE DRAWINGS FOR EXTENT AND LOCATION OF ADDITIONAL WALL MOUNTED ITEMS SUCH AS CARD READERS, THERMOSTATS, SWITCHES, OUTLETS, CLOCKS, NURSECALL LIGHTS, FIRE ALARM, ETC. LOCATE ALL OUTLETS, SWITCHES, EQUIP., RECEPTACLE BOXES & OTHER SIMILAR RELATED ITEMS FOR OWNER'S FINAL APPROVAL PRIOR TO CONDUIT/PIPE INSTALLATION.

D. CONTRACTOR TO COORDINATE LOCATION OF CONTRACTOR OR OWNER FURNISHED ITEMS.

E. REFER TO FINISH SCHEDULE AND SPECIFICATIONS FOR SPECIFIC FINISH MATERIAL.

F. ALL VERTICAL DIMENSIONS ARE FROM FINISHED FLOOR, U.N.O.

G. ALL RECESSED SPECIALTIES SHOWN ON ELEVATIONS THAT ARE LOCATED IN FIRE RATED WALLS ARE TO BE 5-SIDED WITH 5/8" TYPE 'X' GYPBOARD SIMILAR TO 3/A961

H. WHERE OUTLETS, MONITORS AND LIGHT SWITCHES ARE NOT DIMENSIONED AT A GIVEN ELEVATION, CAN BE ASSUMED TO BE SIMILAR TO THE ONE ON THE ELEVATION THAT IS DIMENSIONED. WHERE OUTLETS ARE DIMENSIONED ON AN ELEVATION THE TYPICAL FRAMING MUST BE ALTERED AND/OR STUDS HEADED OFF TO ACCOMMODATE DIMENSIONED LOCATIONS AND SHOWN.

I. ALL WALL SURFACES IN NEED OF REPAIR SHALL BE FILLED, SPACKLED AND TEXTURED TO MATCH THE EXISTING WALLS. FINISH AS SPECIFIED.

BUILT-IN CASEWORK NOTES

AA. PROVIDE BACKSPLASH AND ENDSPLASH OF MATERIAL MATCHING COUNTERTOP ON ALL COUNTERTOPS U.O.N. BACKSPLASH TO RETURN AT CABINET ENDS - SEE DETAIL OR NOTES FOR HEIGHTS.

BB. PROVIDE PLAM END PANEL WHERE COUNTERTOP ENDS WITHOUT BASE UNIT OR SUPPORTING WALL.

CC. PROVIDE "FLOATING WALL-MOUNT BRACKET" @ 32" O.C. AT ANY OPEN COUNTER WITH SPAN GREATER THAN 3'-0" WIDTH. SEE 10/A940. CONTRACTOR TO VERFIY COORDINATION OF TRADES FOR IN-WALL INSTALLATION

DD. PROVIDE (1) ADJUSTABLE SHELF AT BASE CABINETS EXCEPT SINK BASE, U.O.N.

EE. FIELD VERIFY ALL DIMENSIONS AND EQUIPMENT SIZES PRIOR TO CASEWORK FABRICATION.

FF. PROVIDE 3" DIAMETER GROMMETS AT BACK OF COUNTERTOP AS DIRECTED BY OWNER.

GG. ALL SHELVES ARE ADJUSTABLE, U.O.N.

IDENTIFICATION STAMP
DIV. OF THE STATE ARCHITECT
APP: 02-118630 INC:
REVIEWED FOR
SS ☐ FLS ☐ ACS ☑
DATE: 04/13/2021

OFFICE OF THE STATE FIRE MARSHAL
APPROVED FIRE AND PANIC ONLY
Approval of this plan does not authorize or approve any omission or deviation from applicable regulations. Final approval is subject to field inspection. One set of approved plans shall be available on the project site at all times.
PERMIT NO. 20-N-2332-CP
REVIEWED BY: LEO CATAYLO, OSFM
DATE: 4 / /2021

DGS GENERAL SERVICES
Department of General Services
State of California
Real Estate Services Division
Project Management & Development Branch
707 Third Street, Suite 4-105
West Sacramento, California 95605

NICHOLS MELBURG & ROSSETTO
ARCHITECTS + ENGINEERS
300 Knollcrest Drive
Redding, CA. 96002
(530) 222-3300 (530) 222-3538 FAX
http://www.nmrdesign.com

Copyright © 2020
All ideas, designs, arrangements and plans indicated or represented by this drawing are owned by, and the property of, NICHOLS, MELBURG and ROSSETTO and were created, evolved and developed for use on, and in conjunction with, the specified project. None of such ideas, designs, arrangements or plans shall be used by, or disclosed to any person, firm or corporation for any purpose whatsoever without the written permission of NICHOLS, MELBURG and ROSSETTO

LICENSE STAMPS

LICENSED ARCHITECT KYLE MATTHEW ROSSETTO 21504 REN. 10/31/21 STATE OF CALIFORNIA

CONSULTANT

DRAWING STATUS
CONSTRUCTION DOCUMENTS

ISSUE

No.	Date	Description
1	10/20/2020	INITIAL PLAN REVIEW
2	01/22/2021	AGENCY RESUBMITTAL
3	03/22/2021	AGENCY RESUBMITTAL

If drawing is not 30" x 42" it is a reduced print

PROJECT
RESIDENTIAL CENTER, UKIAH: REPLACEMENT OF EXISTING RESIDENTIAL CENTER
440 EAST HILL ROAD
WILLITS, CALIFORNIA 95490
MENDOCINO COUNTY
CALIFORNIA CONSERVATION CORP

Supervisor	Designed	Drawn
KJM	DMH	MO

DSA Application No.
02-118630

SHEET TITLE
MULTI-PURPOSE INTERIOR ELEVATIONS

DGS Project Number: 00000000001826
NMR Project Number: 18-6456

Reference North
Sheet Scale: As indicated
Sheet Number: A500M

ISSUE DATE
July 9, 2021

Plot Date: 2/19/2021 9:14:15 AM
File Name: BIM 360://CCC-Willits Residential Center/A_CCC-WRC-MP.rvt

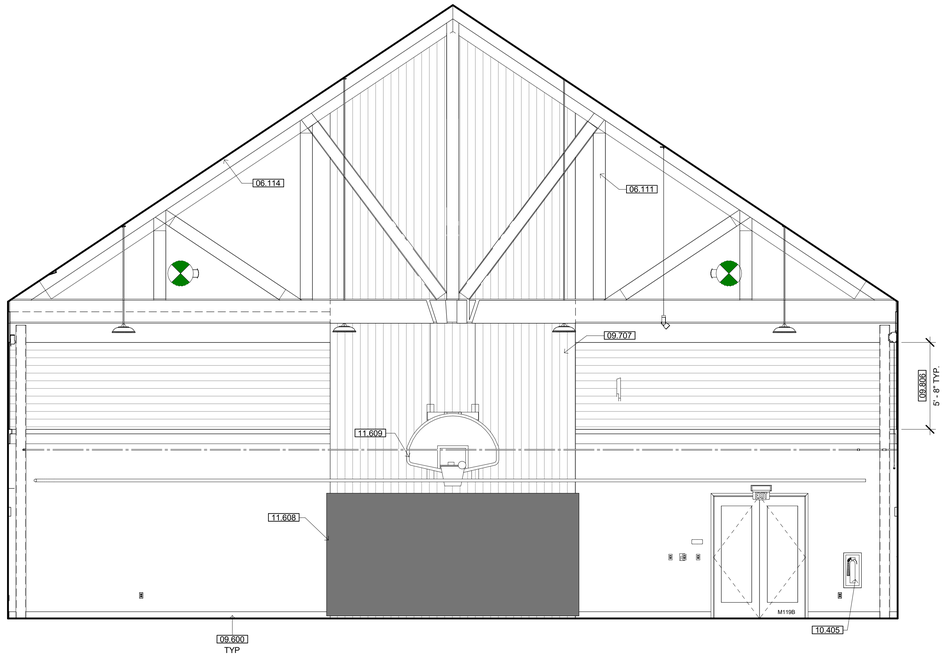

1 M119 - MULTI-USE COURT - NORTH
1/4" = 1'-0"

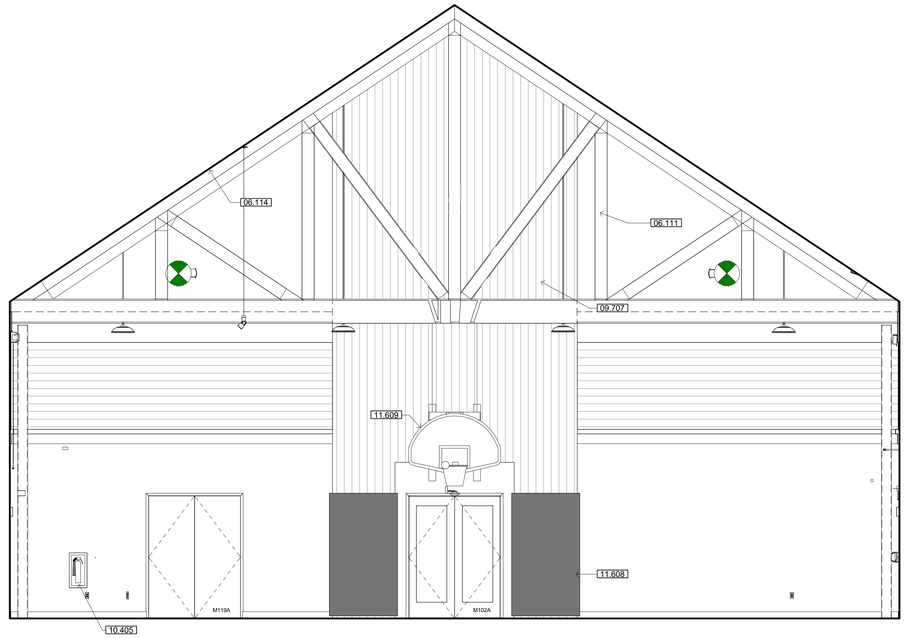

2 M119 - MULTI-USE COURT - SOUTH
1/4" = 1'-0"

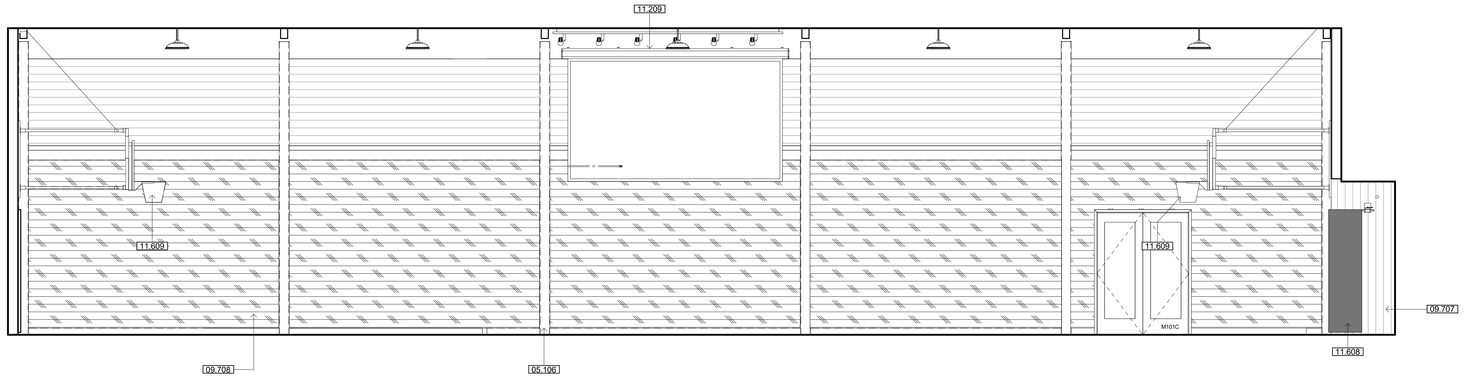

3 M119 - MULTI-USE COURT - EAST
1/4" = 1'-0"

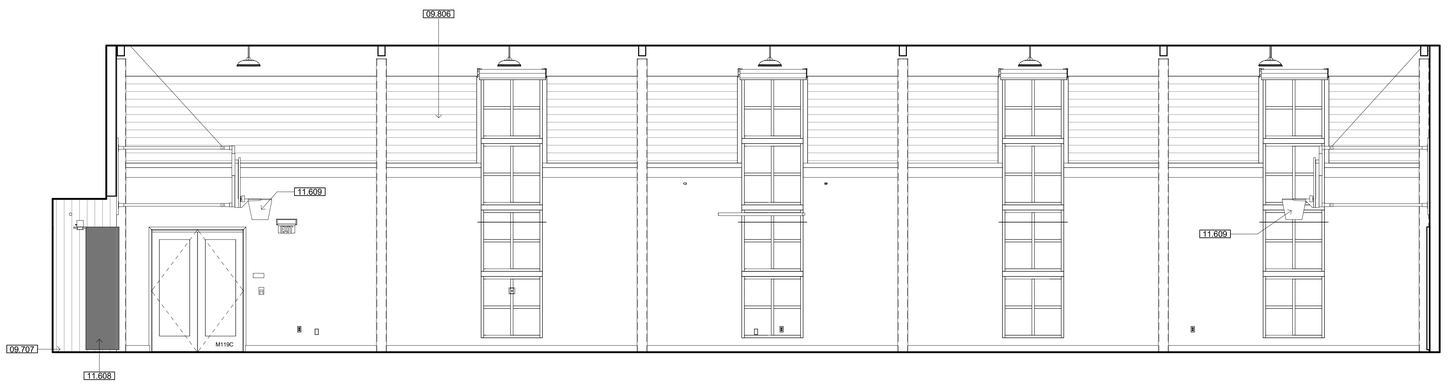

4 M119 - MULTI-USE COURT - WEST
1/4" = 1'-0"

KEYNOTES

05.106	STEEL COLUMN - SEE STRUCTURAL
06.111	GLULAM TRUSS
06.114	CROSS-LAMINATED TIMBER
09.600	BASE-SEE FINISH SCHEDULE
09.707	RECLAIMED WOOD PLANK WALL SIDING O/ GYP. BD.
09.708	WALL PROTECTION CUSTOM MURAL FULL LENGTH OF WALL, SEE FINISH SCHEDULE
09.806	ACOUSTICAL WALL TILE
10.405	RECESSED FIRE EXTINGUISHER CABINET PER DETAIL 2A/A960
11.209	WALL-MOUNTED ELECTRIC DROP-DOWN PROJECTION SCREEN
11.608	GYMNASIUM WALL PADS - SEE DETAIL 7/A980 FOR ATTACHMENT
11.609	WALL MOUNTED BASKETBALL BACKSTOP SYSTEM

INTERIOR ELEV. GEN. NOTES

A. GENERAL CONTRACTOR TO PROVIDE STRUCTURAL SUPPORT, BACKING AND/OR METAL REINFORCEMENT IN STUD WALLS AT ALL CASEWORK, CABINETS, SHELVING, EQUIPMENT ETC. REFER TO G212 & G213 FOR TYPICAL MOUNTING HEIGHTS AND ARRANGEMENTS OF COMMON SPECIALTY ITEMS INCLUDING SHOWERS AND TOILET ROOMS.

B. SEE SHEET 18/A960 FOR TYP. ACCESSORY MOUNTING

C. SEE MECHANICAL, ELECTRICAL & LOW VOLTAGE DRAWINGS FOR EXTENT AND LOCATION OF ADDITIONAL WALL MOUNTED ITEMS SUCH AS CARD READERS, THERMOSTATS, SWITCHES, OUTLETS, CLOCKS, NURSECALL LIGHTS, FIRE ALARM, ETC. LOCATE ALL OUTLETS, SWITCHES, EQUIP., RECEPTACLE BOXES & OTHER SIMILAR RELATED ITEMS FOR OWNER'S FINAL APPROVAL PRIOR TO CONDUIT/PIPE INSTALLATION.

D. CONTRACTOR TO COORDINATE LOCATION OF CONTRACTOR OR OWNER FURNISHED ITEMS.

E. REFER TO FINISH SCHEDULE AND SPECIFICATIONS FOR SPECIFIC FINISH MATERIAL.

F. ALL VERTICAL DIMENSIONS ARE FROM FINISHED FLOOR, U.N.O.

G. ALL RECESSED SPECIALTIES SHOWN ON ELEVATIONS THAT ARE LOCATED IN FIRE RATED WALLS ARE TO BE 5-SIDED WITH 5/8" TYPE 'X' GYPBOARD SIMILAR TO 3/A961

H. WHERE OUTLETS, MONITORS AND LIGHT SWITCHES ARE NOT DIMENSIONED AT A GIVEN ELEVATION, CAN BE ASSUMED TO BE SIMILAR TO THE ONE ON THE ELEVATION THAT IS DIMENSIONED. WHERE OUTLETS ARE DIMENSIONED ON AN ELEVATION THE TYPICAL FRAMING MUST BE ALTERED AND/OR STUDS HEADED OFF TO ACCOMMODATE DIMENSIONED LOCATIONS AND SHOWN.

I. ALL WALL SURFACES IN NEED OF REPAIR SHALL BE FILLED, SPACKLED AND TEXTURED TO MATCH THE EXISTING WALLS. FINISH AS SPECIFIED.

BUILT-IN CASEWORK NOTES

AA. PROVIDE BACKSPLASH AND ENDSPLASH OF MATERIAL MATCHING COUNTERTOP ON ALL COUNTERTOPS U.O.N. BACKSPLASH TO RETURN AT CABINET ENDS - SEE DETAIL OR NOTES FOR HEIGHTS.

BB. PROVIDE PLAM END PANEL WHERE COUNTERTOP ENDS WITHOUT BASE UNIT OR SUPPORTING WALL.

CC. PROVIDE "FLOATING WALL-MOUNT BRACKET" @ 32" O.C. AT ANY OPEN COUNTER WITH SPAN GREATER THAN 3'-0" WIDTH. SEE 10/A940. CONTRACTOR TO VERFIY COORDINATION OF TRADES FOR IN-WALL INSTALLATION

DD. PROVIDE (1) ADJUSTABLE SHELF AT BASE CABINETS EXCEPT SINK BASE, U.O.N.

EE. FIELD VERIFY ALL DIMENSIONS AND EQUIPMENT SIZES PRIOR TO CASEWORK FABRICATION.

FF. PROVIDE 3" DIAMETER GROMMETS AT BACK OF COUNTERTOP AS DIRECTED BY OWNER.

GG. ALL SHELVES ARE ADJUSTABLE, U.O.N.

INTERIOR ELEV. LEGEND

###X	CASEWORK TAG - SEE SHEET A940
X	SIGNAGE TAG - SEE SHEET A965
B##X	DOOR TAG - SEE SCHEDULE, SHEET A710
X	WINDOW TAG - SEE SCHEDULE, SHEET A720
	GYPSUM BOARD - PAINT
	WALL TILE WT-1/2 OVER CEMENTITIOUS BACKER BOARD
	WALL TILE WT-3 OVER CEMENTITIOUS BACKER BOARD
	WALL PROTECTION OVER GYPSUM BOARD
	FIBER REINFORCED PLASTIC (FRP) OVER GYPSUM BOARD
	PAINTED MDO PLYWOOD
	CUSTOM DIGITAL WALL COVERING OVER GYPSUM BOARD - SEE DETAIL -/--
	ACOUSTIC WALL PANEL OVER GYPSUM BOARD - SEE DETAIL A980/5
	RECLAIMED WOOD PLANKS OVER GYPSUM BOARD - SEE DETAIL A980/14
	FULL HEIGHT SOLID SURFACE WALL PANELS

IDENTIFICATION STAMP
DIV. OF THE STATE ARCHITECT
APP: 02-118630 INC:
REVIEWED FOR
SS ☐ FLS ☐ ACS ☑
DATE: 04/13/2021

OFFICE OF THE STATE FIRE MARSHAL
APPROVED FIRE AND PANIC ONLY
Approval of this plan does not authorize or approve any omission or deviation from applicable regulations. Final approval is subject to field inspection. One set of approved plans shall be available on the project site at all times.
PERMIT NO. 20-N-2332-CP
REVIEWED BY: LEO CATAYLO, OSFM
DATE: 4 / /2021

GENERAL SERVICES
Department of General Services
State of California
Real Estate Services Division
Project Management & Development Branch
707 Third Street, Suite 4-105
West Sacramento, California 95605

NICHOLS MELBURG & ROSSETTO
ARCHITECTS + ENGINEERS
300 Knollcrest Drive
Redding, CA. 96002
(530) 222-3300 (530) 222-3538 FAX
http://www.nmrdesign.com

Copyright © 2020
All ideas, designs, arrangements and plans indicated or represented by this drawing are owned by, and the property of, NICHOLS, MELBURG and ROSSETTO and were created, evolved and developed for use on, and in conjunction with, the specified project. None of such ideas, designs, arrangements or plans shall be used by, or disclosed to any person, firm or corporation for any purpose whatsoever without the written permission of NICHOLS, MELBURG and ROSSETTO

LICENSE STAMPS

LICENSED ARCHITECT KYLE MATTHEW ROSSETTO C-32504 REN. 10/31/21 STATE OF CALIFORNIA

CONSULTANT

DRAWING STATUS
CONSTRUCTION DOCUMENTS

ISSUE

No.	Date	Description
1	10/20/2020	INITIAL PLAN REVIEW
2	01/22/2021	AGENCY RESUBMITTAL
3	03/22/2021	AGENCY RESUBMITTAL

If drawing is not 30" x 42" it is a reduced print

PROJECT
RESIDENTIAL CENTER, UKIAH: REPLACEMENT OF EXISTING RESIDENTIAL CENTER
440 EAST HILL ROAD
WILLITS, CALIFORNIA 95490
MENDOCINO COUNTY
CALIFORNIA CONSERVATION CORP

Supervisor	Designed	Drawn
KJM	DMH	Author

DSA Application No.
02-118630

SHEET TITLE
MULTI-PURPOSE INTERIOR ELEVATIONS

DGS Project Number: 0000000000001826
NMR Project Number: 18-6456

Reference North: NORTH
Sheet Scale: As indicated
Sheet Number: A501M

ISSUE DATE
July 9, 2021

Plot Date: 5/19/2021 9:14:26 AM
File Name: 3184 3000 /C-CC-Willits Residential Center/A_CCC-WRC-MP.rvt

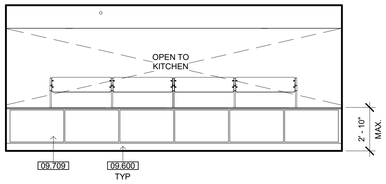

1 M121 - SERVICE - NORTH
1/4" = 1'-0"

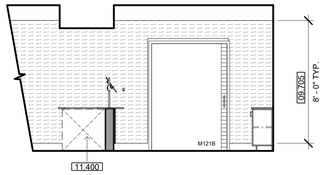

2 M121 - SERVICE - EAST
1/4" = 1'-0"

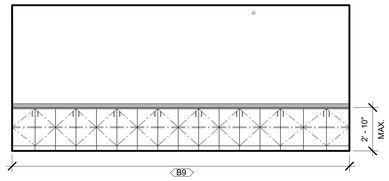

3 M121 - SERVICE - SOUTH
1/4" = 1'-0"

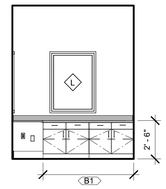

4 M124 - OFFICE - NORTH
1/4" = 1'-0"

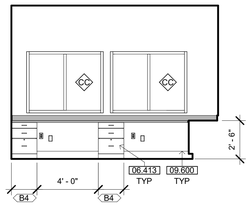

5 M124 - OFFICE - WEST
1/4" = 1'-0"

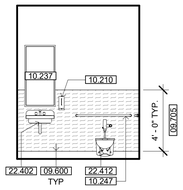

6 M131 - RESTROOM - NORTH
1/4" = 1'-0"

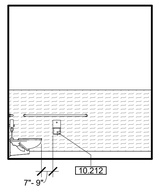

7 M131 - RESTROOM - EAST
1/4" = 1'-0"

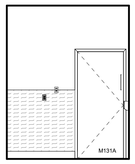

8 M131 - RESTROOM - SOUTH
1/4" = 1'-0"

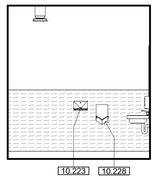

9 M131 - RESTROOM - WEST
1/4" = 1'-0"

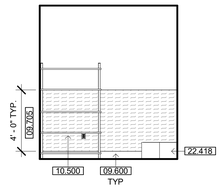

10 M129 - JANITOR - EAST
1/4" = 1'-0"

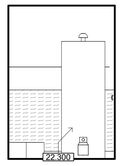

11 M129 - JANITOR - SOUTH
1/4" = 1'-0"

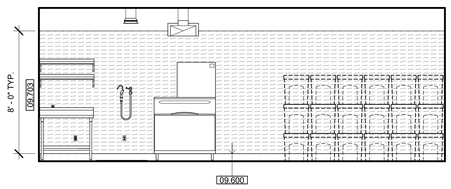

12 M132 - SPIKE COOLER - EAST
1/4" = 1'-0"

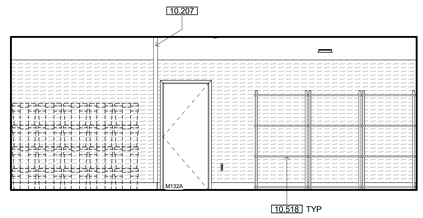

13 M132 - SPIKE COOLER - WEST
1/4" = 1'-0"

KEYNOTES

06.413	CABINET LOCK AS SHOWN
09.600	BASE-SEE FINISH SCHEDULE
09.703	WALL PROTECTION-SEE FINISH SCHEDULE
09.705	FRP PANEL-SEE FINISH SCHEDULE
09.709	PLASTIC LAMINATE PANELS
10.207	CORNER GUARD - SEE FINISH SCHEDULE
10.210	SOAP DISPENSER
10.212	SEMI-RECESSED TOILET TISSUE DISPENSER
10.223	SURFACE MOUNTED PAPER TOWEL DISPENSER
10.228	HAND DRYER
10.237	24"W X 46"H MIRROR
10.247	GRAB BARS, 48" AT SIDE & 42" AT BACK - SEE DETAIL 4/A960
10.500	METAL STORAGE SHELVING UNIT
10.518	FREESTANDING SHELVING UNIT
11.400	FOOD SERVICE EQUIPMENT-SEE FOOD SERVICE DRAWINGS
22.300	WATER HEATER - SEE PLUMBING DRAWINGS
22.402	SINK - SEE PLUMBING DRAWINGS
22.412	ACCESSIBLE WALL HUNG TOILET
22.418	LAVATORY SINK-SEE PLUMBING DRAWINGS

INTERIOR ELEV. LEGEND

##X	CASEWORK TAG - SEE SHEET A940
X	SIGNAGE TAG - SEE SHEET A965
B##X	DOOR TAG - SEE SCHEDULE, SHEET A710
X	WINDOW TAG - SEE SCHEDULE, SHEET A720
	GYPSUM BOARD - PAINT
	WALL TILE WT-1/2 OVER CEMENTITIOUS BACKER BOARD
	WALL TILE WT-3 OVER CEMENTITIOUS BACKER BOARD
	WALL PROTECTION OVER GYPSUM BOARD
	FIBER REINFORCED PLASTIC (FRP) OVER GYPSUM BOARD
	PAINTED MDO PLYWOOD
	CUSTOM DIGITAL WALL COVERING OVER GYPSUM BOARD - SEE DETAIL -/--
	ACOUSTIC WALL PANEL OVER GYPSUM BOARD - SEE DETAIL A980/5
	RECLAIMED WOOD PLANKS OVER GYPSUM BOARD - SEE DETAIL A980/14
	FULL HEIGHT SOLID SURFACE WALL PANELS

INTERIOR ELEV. GEN. NOTES

A. GENERAL CONTRACTOR TO PROVIDE STRUCTURAL SUPPORT, BACKING AND/OR METAL REINFORCEMENT IN STUD WALLS AT ALL CASEWORK, CABINETS, SHELVING, EQUIPMENT ETC. REFER TO G212 & G213 FOR TYPICAL MOUNTING HEIGHTS AND ARRANGEMENTS OF COMMON SPECIALTY ITEMS INCLUDING SHOWERS AND TOILET ROOMS.

B. SEE SHEET 18/A960 FOR TYP. ACCESSORY MOUNTING

C. SEE MECHANICAL, ELECTRICAL & LOW VOLTAGE DRAWINGS FOR EXTENT AND LOCATION OF ADDITIONAL WALL MOUNTED ITEMS SUCH AS CARD READERS, THERMOSTATS, SWITCHES, OUTLETS, CLOCKS, NURSECALL LIGHTS, FIRE ALARM, ETC. LOCATE ALL OUTLETS, SWITCHES, EQUIP., RECEPTACLE BOXES & OTHER SIMILAR RELATED ITEMS FOR OWNER'S FINAL APPROVAL PRIOR TO CONDUIT/PIPE INSTALLATION.

D. CONTRACTOR TO COORDINATE LOCATION OF CONTRACTOR OR OWNER FURNISHED ITEMS.

E. REFER TO FINISH SCHEDULE AND SPECIFICATIONS FOR SPECIFIC FINISH MATERIAL.

F. ALL VERTICAL DIMENSIONS ARE FROM FINISHED FLOOR, U.N.O.

G. ALL RECESSED SPECIALTIES SHOWN ON ELEVATIONS THAT ARE LOCATED IN FIRE RATED WALLS ARE TO BE 5-SIDED WITH 5/8" TYPE 'X' GYPBOARD SIMILAR TO 3/A961

H. WHERE OUTLETS, MONITORS AND LIGHT SWITCHES ARE NOT DIMENSIONED AT A GIVEN ELEVATION, CAN BE ASSUMED TO BE SIMILAR TO THE ONE ON THE ELEVATION THAT IS DIMENSIONED. WHERE OUTLETS ARE DIMENSIONED ON AN ELEVATION THE TYPICAL FRAMING MUST BE ALTERED AND/OR STUDS HEADED OFF TO ACCOMMODATE DIMENSIONED LOCATIONS AND SHOWN.

I. ALL WALL SURFACES IN NEED OF REPAIR SHALL BE FILLED, SPACKLED AND TEXTURED TO MATCH THE EXISTING WALLS. FINISH AS SPECIFIED.

BUILT-IN CASEWORK NOTES

AA. PROVIDE BACKSPLASH AND ENDSPLASH OF MATERIAL MATCHING COUNTERTOP ON ALL COUNTERTOPS U.O.N. BACKSPLASH TO RETURN AT CABINET ENDS - SEE DETAIL OR NOTES FOR HEIGHTS.

BB. PROVIDE PLAM END PANEL WHERE COUNTERTOP ENDS WITHOUT BASE UNIT OR SUPPORTING WALL.

CC. PROVIDE "FLOATING WALL-MOUNT BRACKET" @ 32" O.C. AT ANY OPEN COUNTER WITH SPAN GREATER THAN 3'-0" WIDTH. SEE 10/A940. CONTRACTOR TO VERFIY COORDINATION OF TRADES FOR IN-WALL INSTALLATION

DD. PROVIDE (1) ADJUSTABLE SHELF AT BASE CABINETS EXCEPT SINK BASE, U.O.N.

EE. FIELD VERIFY ALL DIMENSIONS AND EQUIPMENT SIZES PRIOR TO CASEWORK FABRICATION.

FF. PROVIDE 3" DIAMETER GROMMETS AT BACK OF COUNTERTOP AS DIRECTED BY OWNER.

GG. ALL SHELVES ARE ADJUSTABLE, U.O.N.

IDENTIFICATION STAMP
DIV. OF THE STATE ARCHITECT
APP: 02-118630 INC:
REVIEWED FOR
SS ☐ FLS ☐ ACS ☑
DATE: 04/13/2021

OFFICE OF THE STATE FIRE MARSHAL
APPROVED FIRE AND PANIC ONLY
Approval of this plan does not authorize or approve any omission or deviation from applicable regulations. Final approval is subject to field inspection. One set of approved plans shall be available on the project site at all times.
PERMIT NO. 20-N-2332-CP
REVIEWED BY: LEO CATAYLO, OSFM
DATE: 4/1/2021

DGS GENERAL SERVICES
Department of General Services
State of California
Real Estate Services Division
Project Management & Development Branch
707 Third Street, Suite 4-105
West Sacramento, California 95605

NICHOLS MELBURG & ROSSETTO
ARCHITECTS + ENGINEERS
300 Knollcrest Drive
Redding, CA. 96002
(530) 222-3300 (530) 222-3538 FAX
http://www.nmrdesign.com

Copyright © 2020
All ideas, designs, arrangements and plans indicated or represented by this drawing are owned by, and the property of, NICHOLS, MELBURG and ROSSETTO and were created, evolved and developed for use on, and in conjunction with, the specified project. None of such ideas, designs, arrangements or plans shall be used by, or disclosed to any person, firm or corporation for any purpose whatsoever without the written permission of NICHOLS, MELBURG and ROSSETTO.

LICENSE STAMPS

LICENSED ARCHITECT
KYLE MATTHEW
C-27504
REN 10/31/21
STATE OF CALIFORNIA

CONSULTANT

DRAWING STATUS
CONSTRUCTION DOCUMENTS

ISSUE

No.	Date	Description
1	10/20/2020	INITIAL PLAN REVIEW
2	01/22/2021	AGENCY RESUBMITTAL
3	03/22/2021	AGENCY RESUBMITTAL

If drawing is not 30" x 42" it is a reduced print

PROJECT
RESIDENTIAL CENTER, UKIAH: REPLACEMENT OF EXISTING RESIDENTIAL CENTER
440 EAST HILL ROAD
WILLITS, CALIFORNIA 95490
MENDOCINO COUNTY
CALIFORNIA CONSERVATION CORP

Supervisor	Designed	Drawn
KJM	DMH	Author

DSA Application No.
02-118630

SHEET TITLE
MULTI-PURPOSE INTERIOR ELEVATIONS

DGS Project Number	NMR Project Number
00000000001826	18-6456

Reference North
Sheet Scale: As indicated
Sheet Number: A502M

ISSUE DATE
July 9, 2021

Plot Date: 3/19/2021 9:14:52 AM
File Name: BIM 360://CCC-Ukiah Residential Center/A_CCC-WRC-MP.rvt

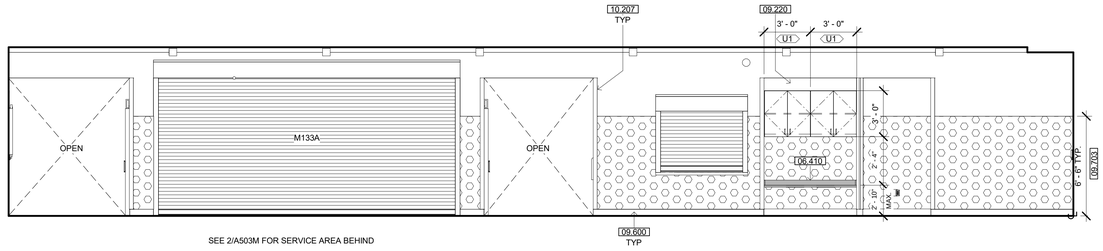

1 M101 - DINING - NORTH
1/4" = 1'-0"

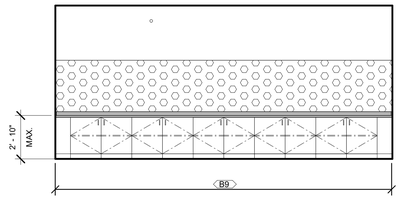

2 M101 - DINING - NORTH OPEN
1/4" = 1'-0"

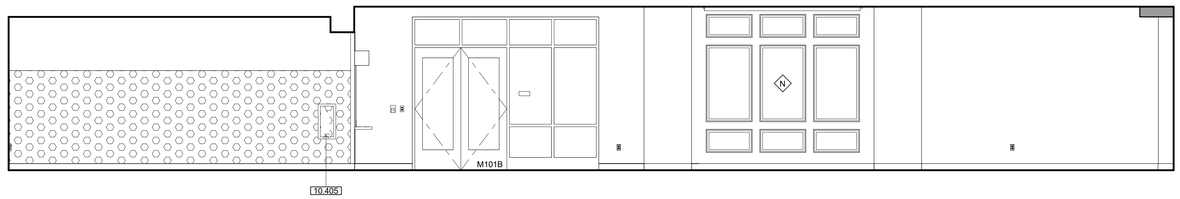

3 M101 - DINING - EAST
1/4" = 1'-0"

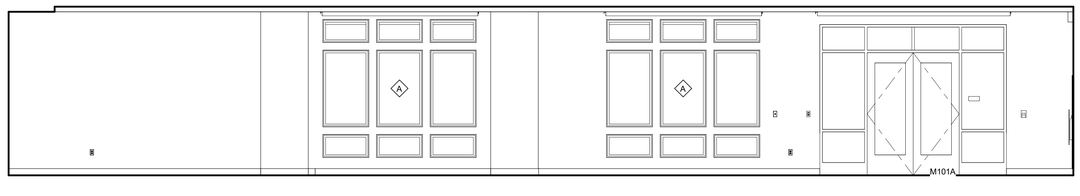

4 M101 - DINING - SOUTH
1/4" = 1'-0"

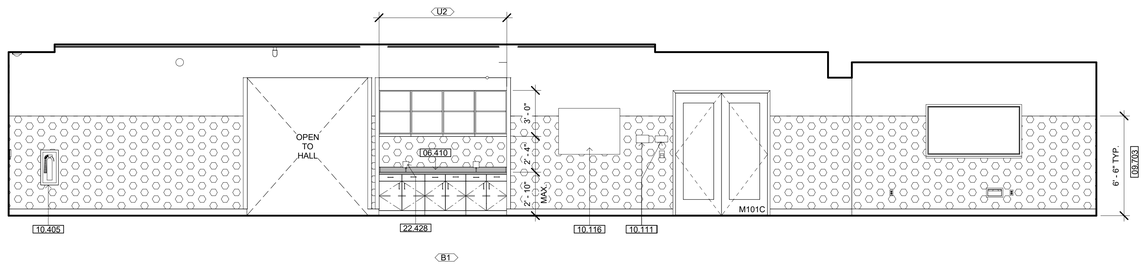

5 M101 - DINING - WEST
1/4" = 1'-0"

KEYNOTES

06.410	SOLID SURFACE COUNTERTOP
09.220	GYPSUM BOARD SOFFIT
09.600	BASE-SEE FINISH SCHEDULE
09.703	WALL PROTECTION-SEE FINISH SCHEDULE
10.111	SIGNAGE - SEE SIGNAGE TYPES
10.116	GLASS DISPLAY MESSAGE BOARD
10.207	CORNER GUARD - SEE FINISH SCHEDULE
10.405	RECESSED FIRE EXTINGUISHER CABINET PER DETAIL 2/A/A960
22.428	SELF SERVE WATER - SEE PLUMBING DRAWINGS

INTERIOR ELEV. LEGEND

###X	CASEWORK TAG - SEE SHEET A940
X	SIGNAGE TAG - SEE SHEET A965
B##X	DOOR TAG - SEE SCHEDULE, SHEET A710
X	WINDOW TAG - SEE SCHEDULE, SHEET A720
	GYPSUM BOARD - PAINT
	WALL TILE WT-1/2 OVER CEMENTITIOUS BACKER BOARD
	WALL TILE WT-3 OVER CEMENTITIOUS BACKER BOARD
	WALL PROTECTION OVER GYPSUM BOARD
	FIBER REINFORCED PLASTIC (FRP) OVER GYPSUM BOARD
	PAINTED MDO PLYWOOD
	CUSTOM DIGITAL WALL COVERING OVER GYPSUM BOARD - SEE DETAIL -/--
	ACOUSTIC WALL PANEL OVER GYPSUM BOARD - SEE DETAIL A980/5
	RECLAIMED WOOD PLANKS OVER GYPSUM BOARD - SEE DETAIL A980/14
	FULL HEIGHT SOLID SURFACE WALL PANELS

INTERIOR ELEV. GEN. NOTES

A. GENERAL CONTRACTOR TO PROVIDE STRUCTURAL SUPPORT, BACKING AND/OR METAL REINFORCEMENT IN STUD WALLS AT ALL CASEWORK, CABINETS, SHELVING, EQUIPMENT ETC. REFER TO G212 & G213 FOR TYPICAL MOUNTING HEIGHTS AND ARRANGEMENTS OF COMMON SPECIALTY ITEMS INCLUDING SHOWERS AND TOILET ROOMS.

B. SEE SHEET 18/A960 FOR TYP. ACCESSORY MOUNTING

C. SEE MECHANICAL, ELECTRICAL & LOW VOLTAGE DRAWINGS FOR EXTENT AND LOCATION OF ADDITIONAL WALL MOUNTED ITEMS SUCH AS CARD READERS, THERMOSTATS, SWITCHES, OUTLETS, CLOCKS, NURSECALL LIGHTS, FIRE ALARM, ETC. LOCATE ALL OUTLETS, SWITCHES, EQUIP., RECEPTACLE BOXES & OTHER SIMILAR RELATED ITEMS FOR OWNER'S FINAL APPROVAL PRIOR TO CONDUIT/PIPE INSTALLATION.

D. CONTRACTOR TO COORDINATE LOCATION OF CONTRACTOR OR OWNER FURNISHED ITEMS.

E. REFER TO FINISH SCHEDULE AND SPECIFICATIONS FOR SPECIFIC FINISH MATERIAL.

F. ALL VERTICAL DIMENSIONS ARE FROM FINISHED FLOOR, U.N.O.

G. ALL RECESSED SPECIALTIES SHOWN ON ELEVATIONS THAT ARE LOCATED IN FIRE RATED WALLS ARE TO BE 5-SIDED WITH 5/8" TYPE 'X' GYPBOARD SIMILAR TO 3/A961

H. WHERE OUTLETS, MONITORS AND LIGHT SWITCHES ARE NOT DIMENSIONED AT A GIVEN ELEVATION, CAN BE ASSUMED TO BE SIMILAR TO THE ONE ON THE ELEVATION THAT IS DIMENSIONED. WHERE OUTLETS ARE DIMENSIONED ON AN ELEVATION THE TYPICAL FRAMING MUST BE ALTERED AND/OR STUDS HEADED OFF TO ACCOMMODATE DIMENSIONED LOCATIONS AND SHOWN.

I. ALL WALL SURFACES IN NEED OF REPAIR SHALL BE FILLED, SPACKLED AND TEXTURED TO MATCH THE EXISTING WALLS. FINISH AS SPECIFIED.

BUILT-IN CASEWORK NOTES

AA. PROVIDE BACKSPLASH AND ENDSPLASH OF MATERIAL MATCHING COUNTERTOP ON ALL COUNTERTOPS U.O.N. BACKSPLASH TO RETURN AT CABINET ENDS - SEE DETAIL OR NOTES FOR HEIGHTS.

BB. PROVIDE PLAM END PANEL WHERE COUNTERTOP ENDS WITHOUT BASE UNIT OR SUPPORTING WALL.

CC. PROVIDE "FLOATING WALL-MOUNT BRACKET" @ 32" O.C. AT ANY OPEN COUNTER WITH SPAN GREATER THAN 3'-0" WIDTH. SEE 10/A940. CONTRACTOR TO VERFIY COORDINATION OF TRADES FOR IN-WALL INSTALLATION

DD. PROVIDE (1) ADJUSTABLE SHELF AT BASE CABINETS EXCEPT SINK BASE, U.O.N.

EE. FIELD VERIFY ALL DIMENSIONS AND EQUIPMENT SIZES PRIOR TO CASEWORK FABRICATION.

FF. PROVIDE 3" DIAMETER GROMMETS AT BACK OF COUNTERTOP AS DIRECTED BY OWNER.

GG. ALL SHELVES ARE ADJUSTABLE, U.O.N.

IDENTIFICATION STAMP
DIV. OF THE STATE ARCHITECT
APP: 02-118630 INC:
REVIEWED FOR
SS ☐ FLS ☐ ACS ☑
DATE: 04/13/2021

OFFICE OF THE STATE FIRE MARSHAL
APPROVED FIRE AND PANIC ONLY
Approval of this plan does not authorize or approve any omission or deviation from applicable regulations. Final approval is subject to field inspection. One set of approved plans shall be available on the project site at all times.
PERMIT NO. 20-N-2332-CP
REVIEWED BY: LEO CATAYLO, OSFM
DATE: 4 / /2021

GENERAL SERVICES
Department of General Services
State of California
Real Estate Services Division
Project Management & Development Branch
707 Third Street, Suite 4-105
West Sacramento, California 95605

NICHOLS MELBURG & ROSSETTO
ARCHITECTS + ENGINEERS
300 Knollcrest Drive
Redding, CA. 96002
(530) 222-3300 (530) 222-3538 FAX
http://www.nmrdesign.com

Copyright © 2020
All ideas, designs, arrangements and plans indicated or represented by this drawing are owned by, and the property of, NICHOLS, MELBURG and ROSSETTO and were created, evolved and developed for use on, and in conjunction with, the specified project. None of such ideas, designs, arrangements or plans shall be used by, or disclosed to any person, firm or corporation for any purpose whatsoever without the written permission of NICHOLS, MELBURG and ROSSETTO

LICENSE STAMPS

LICENSED ARCHITECT KYLE MATTHEW ROSSETTO C-31504 REN. 10/31/21 STATE OF CALIFORNIA

CONSULTANT

DRAWING STATUS
CONSTRUCTION DOCUMENTS

ISSUE

No.	Date	Description
1	10/20/2020	INITIAL PLAN REVIEW
2	01/22/2021	AGENCY RESUBMITTAL
3	03/22/2021	AGENCY RESUBMITTAL

If drawing is not 30" x 42" it is a reduced print

PROJECT
RESIDENTIAL CENTER, UKIAH: REPLACEMENT OF EXISTING RESIDENTIAL CENTER
440 EAST HILL ROAD
WILLITS, CALIFORNIA 95490
MENDOCINO COUNTY
CALIFORNIA CONSERVATION CORP

Supervisor	Designed	Drawn
KJM	DMH	Author

DSA Application No.
02-118630

SHEET TITLE
MULTI-PURPOSE INTERIOR ELEVATIONS

DGS Project Number: 000000000001826
NMR Project Number: 18-6456

Reference North
Sheet Scale: As indicated
Sheet Number: A503M

ISSUE DATE
July 9, 2021

Plot Date: 2/10/2023 10:14:58 AM
File Name: BIM 360://CC-Willits Residential Center/A_CCC-WRC-MP.rvt

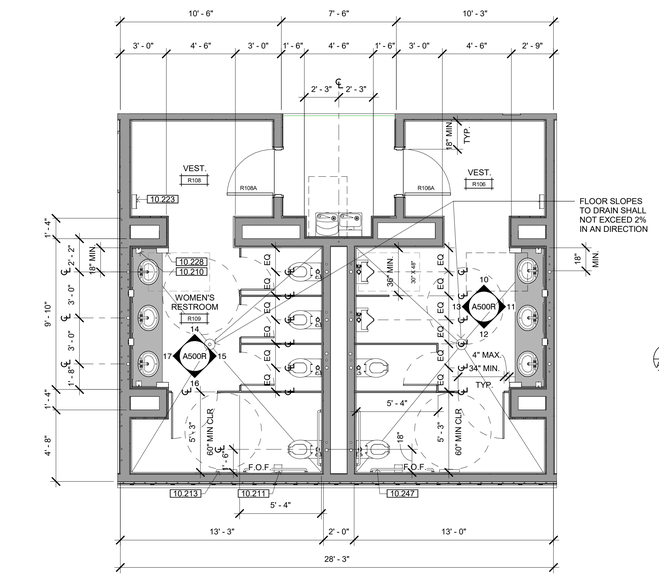

3

ENLARGED PLAN - MULTISTALL RESTROOMS

SCALE: 1/4" = 1'-0"

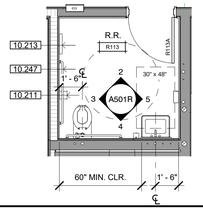

4

ENLARGED PLAN - SINGLE RESTROOM

SCALE: 1/4" = 1'-0"

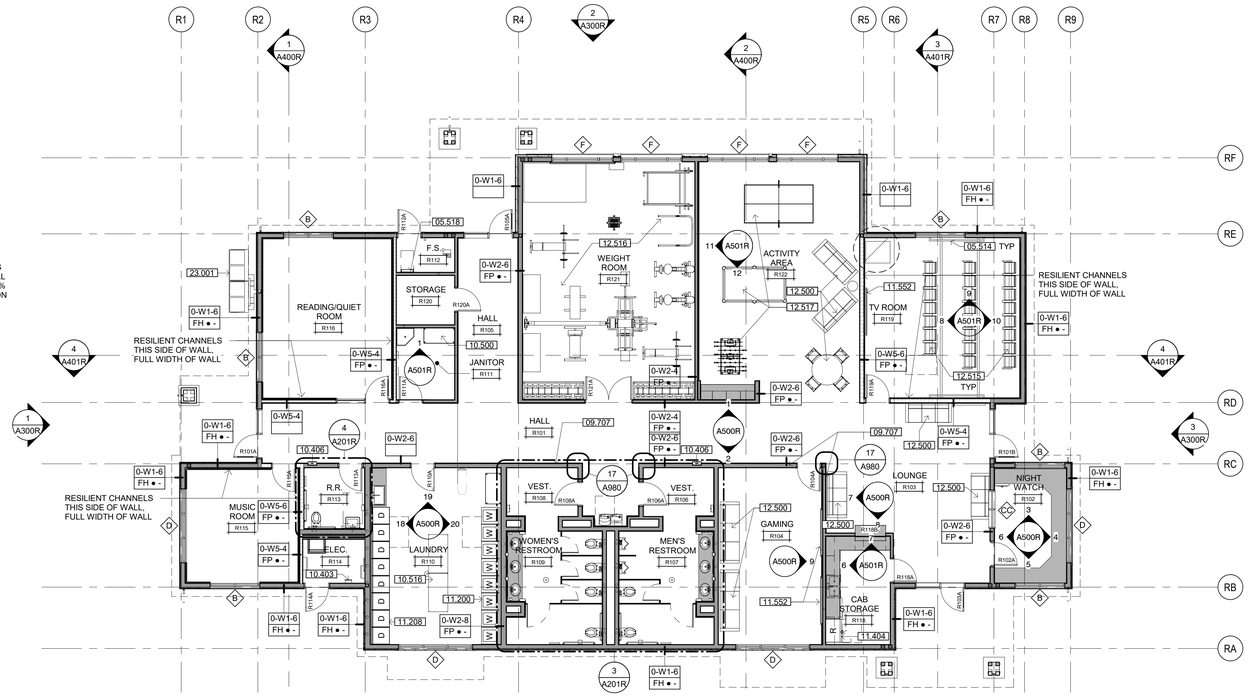

RECREATION BUILDING FLOOR PLAN

SCALE: 1/8" = 1'-0"

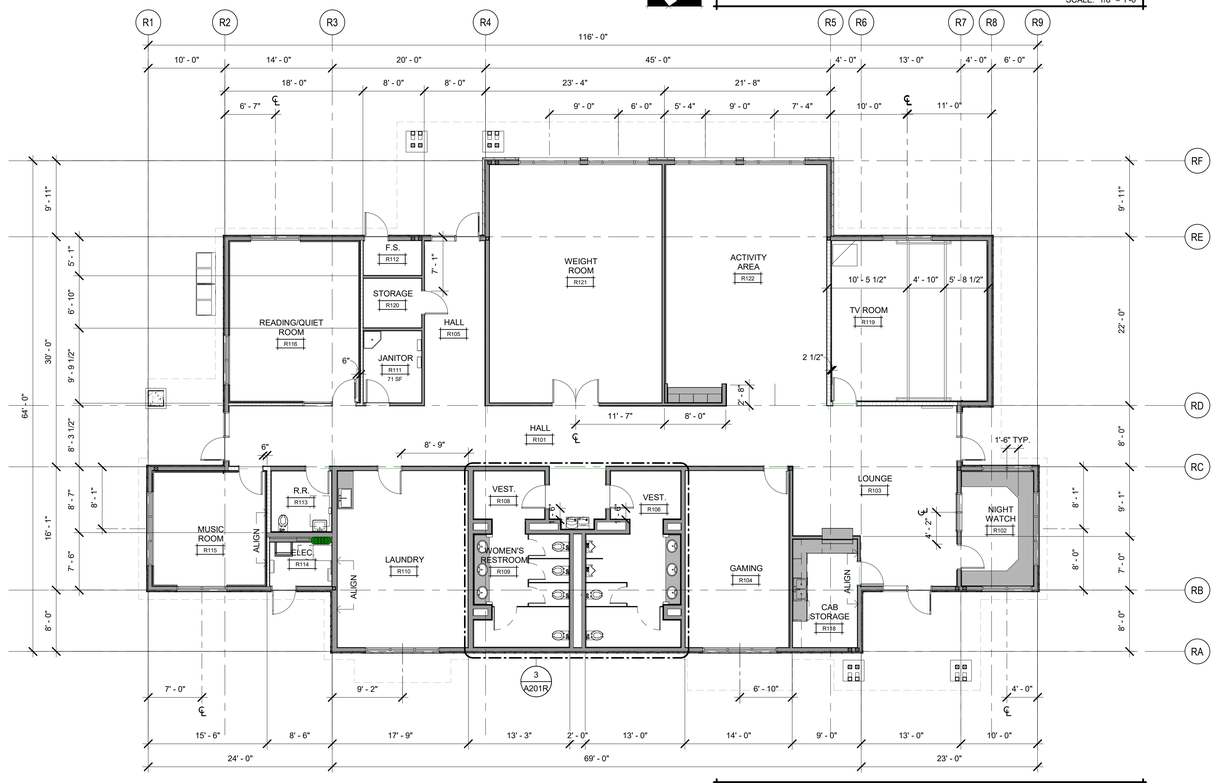

RECREATION BUILDING DIMENSION PLAN

SCALE: 1/8" = 1'-0"

KEYNOTES

05.514	HANDRAIL ON WALL
05.518	PIVOTAL SHIPS LADDER - SEE DETAIL 3/A931
09.707	RECLAIMED WOOD PLANK WALL SIDING O/ GYP. BD.
10.210	SOAP DISPENSER
10.211	SURFACE MOUNTED TOILET TISSUE DISPENSER
10.213	SURFACE MOUNTED TOILET SEAT COVER DISPENSER
10.223	SURFACE MOUNTED PAPER TOWEL DISPENSER
10.228	HAND DRYER
10.247	GRAB BARS, 48" AT SIDE & 42" AT BACK - SEE DETAIL 4/A960
10.403	SURFACE-MOUNTED FIRE EXTINGUISHER CABINET PER DETAIL 3A/A960
10.406	SEMI-RECESSED FIRE EXTINGUISHER CABINET PER DETAIL 2B/A960
10.500	METAL STORAGE SHELVING UNIT
10.516	STAINLESS STEEL WORK TABLE 30" W X 72" L X 34"H
11.200	WASHER, O.F.O.I. CONTRACTOR TO PROVIDE ELECTRIC, WATER & DRAIN CONNECTIONS. CLOTHES WASHER TO HAVE MAX. WATER FACTOR (WF) THAT WILL REDUCE WATER USE BY 10%. AT LEAST ONE UNIT SHALL COMPLY WITH CBC 11B-611.1 THROUGH 11B-611.4 (PROVIDE CLEAR FLOOR SPACE FOR PARALLEL APPROACH CENTERED ON APPLIANCE, OPERABLE PARTS WITHIN ACCESSIBLE REACH RANGE SPECIFIED IN CBC 11B-309, APPLIANCE DOOR 36" MAX. A.F.F. FOR TOP LOADING MACHINES OR 15"-36" A.F.F. FOR FRONT LOADING
11.208	DRYER, O.F.O.I. CONTRACTOR TO PROVIDE ELECTRIC AND VENT CONNECTIONS. AT LEAST ONE UNIT SHALL COMPLY WITH CBC 11B-611.1 THROUGH 11B-611.4 (PROVIDE CLEAR FLOOR SPACE FOR PARALLEL APPROACH CENTERED ON APPLIANCE, OPERABLE PARTS WITHIN ACCESSIBLE REACH RANGE SPECIFIED IN CBC 11B-309, APPLIANCE DOOR 36" MAX. A.F.F. FOR TOP LOADING MACHINES OR 15"-36" A.F.F. FOR FRONT LOADING
11.404	REFRIGERATOR/FREEZER C.F.C.I. CONTRACTOR TO PROVIDE POWER/WATER CONNECTIONS TO UNIT. UNIT TO COMPLY WITH CBC 11B-804.6.6
11.552	WALL MOUNTED TELEVISION, C.F.C.I - SEE DETAIL 17/A960
12.500	FURNITURE-OFOI
12.515	FIXED AUDIENCE SEATING - CFCI
12.516	GYM EQUIPMENT - CFCI
12.517	RECREATION EQUIPMENT - OFOI
23.001	MECHANICAL EQUIPMENT - SEE MECHANICAL DRAWINGS

GENERAL NOTES

A. FOR WALL ASSEMBLIES REFER TO GENERAL ASSEMBLIES, SHEET G121.
B. UNLESS OTHERWISE INDICATED, INTERIOR STUD FRAMED WALLS SHALL BE TYPE 0-2-6.
C. UNLESS OTHERWISE INDICATED, EXTERIOR STUD FRAMED WALLS SHALL BE TYPE 0-1-6.
D. SEE ENLARGED PLANS FOR WALL TYPES NOT INDICATED ON THIS PLAN.
E. REFER TO DETAIL 4/A961 FOR WALL INTERSECTION PRIORITIES.
F. SEE DOOR SCHEDULE, SHEET A710, FOR ADDITIONAL DOOR INFORMATION AND DIMENSIONS. ALL DOOR RATINGS SHALL MATCH OR EXCEED THE RATING OF THE WALL OR PARTITION IN WHICH THEY ARE INSTALLED.
G. SEE WINDOW SCHEDULE, SHEET A720, FOR ADDITIONAL WINDOW INFORMATION AND DIMENSIONS. ALL WINDOW RATINGS SHALL MATCH OR EXCEED THE RATING OF THE WALL OR PARTITION IN WHICH THEY ARE INSTALLED.
H. REFER TO STRUCTURAL NOTES SHEET S011 AND STRUCTURAL DETAIL SHEET S561 FOR TYPICAL WALL FRAMING DETAILS AND REQUIREMENTS
I. REFER TO SHEET A961 FOR HEAD OF WALL ASSEMBLIES
J. REFER TO FINISH SCHEDULE & INTERIOR ELEVATIONS FOR GYPSUM BOARD TYPE & LOCATIONS
K. ALL DIMENSIONS SHALL TAKE PRECEDENCE OVER SCALE SHOWN ON PLANS, SECTIONS AND DETAILS. DIMENSIONS MISSING FROM THE PLANS, OR NEEDED FOR EXECUTION OF WORK, SHALL BE PROVIDED OR CLARIFIED BY THE ARCHITECT BEFORE THE WORK IS INSTALLED. ERRORS RESULTING IN FAILURE TO COMPLY WITH THIS PROCEDURE SHALL BE CORRECTED BY, AND AT THE SOLE EXPENSE OF, THE CONTRACTOR. DIMENSIONS ARE TO FACE OF STUDS OR SLAB UNLESS NOTED OTHERWISE ON DRAWINGS. DO NOT SCALE DRAWINGS. DIMENSIONS NOTED AS "CLEAR" (CLR) ARE TAKEN TO THE FACE OF FINISH MATERIALS. THE CONTRACTOR SHALL VERIFY DIMENSIONS OF PREFABRICATED AND MANUFACTURED ITEMS AND COORDINATE ROUGH OPENINGS ACCORDINGLY.
   1. ALL DIMENSIONS ARE TO FACE OF STUD, CENTERLINE OF COLUMNS, FACE OF CONCRETE
   2. FINISH FLOOR DIMENSIONS ARE TO TOP OF CONCRETE OR OTHER HARD SURFACE
   3. CEILING HEIGHT DIMENSIONS ARE TO FINISH SURFACES

FLOOR PLAN LEGEND

- DOOR WITH TAG - SEE SCHEDULE, SHEET A710
- WINDOW WITH TAG - SEE SCHEDULE, SHEET A720
- COUNTERTOP OVER CASEWORK - DASHED LINE INDICATES WALL MOUNTED CASEWORK ABOVE - SEE INTERIOR ELEVATIONS
- RECESSED FIRE EXTINGUISHER & CABINET (FEC)
- SINK / LAVATORY - SEE PLUMBING DRAWINGS
- TOILET - SEE PLUMBING DRAWINGS
- URINAL - SEE PLUMBING DRAWINGS
- DRINKING FOUNTAIN - SEE PLUMBING DRAWINGS

WALL TYPES LEGEND

SEE SHEET G121 FOR ASSEMBLY TYPES

EXTERIOR

- 2 x 6 WOOD STUD WALL - NON RATED — 0-W1-6 *.● #
- 2 x 12 WOOD STUD WALL - NON RATED — 0-W1-12 *.● #

INTERIOR

- 2 x 4 WOOD STUD WALL - NON RATED — 0-W2-4 *.● #
- 2 x 6 WOOD STUD WALL - NON RATED — 0-W2-6 *.● #
- 2 x 8 WOOD STUD WALL - NON RATED — 0-W2-8 *.● #
- 2 x 12 WOOD STUD WALL - NON RATED — 0-W2-12 *.● #
- 2 x 4 WOOD STUD WALL - ACOUSTIC — 0-W5-4 *.● #
- 2 x 6 WOOD STUD WALL - ACOUSTIC — 0-W5-6 *.● #
- 2 X 4 WOOD STUD WALL - 1-HR FIRE PARTITION W/ PROTECTED OPENINGS — 1-W3-4 *.● #
- 2 X 6 WOOD STUD WALL - 1-HR FIRE PARTITION W/ PROTECTED OPENINGS — 1-W3-6 *.● #

WALL TYPE NOTES

PARTITION SYMBOL

- FIRE-RESISTIVE RATING
- ASSEMBLY DETAIL NUMBER
- NOMINAL STUD SIZE

#-#-#
*.● #

= SPECIAL CONDITIONS
* = PARTITION HEIGHT

IDENTIFICATION STAMP
DIV. OF THE STATE ARCHITECT
APP: 02-118630 INC:
REVIEWED FOR
SS ☐ FLS ☐ ACS ☑
DATE: 04/13/2021

OFFICE OF THE STATE FIRE MARSHAL
APPROVED FIRE AND PANIC ONLY
Approval of this plan does not authorize or approve any omission or deviation from applicable regulations. Final approval is subject to field inspection. One set of approved plans shall be available on the project site at all times.
PERMIT NO. 20-N-2332-CP
REVIEWED BY: LEO CATAYLO, OSFM
DATE: 4/1/2021

DGS GENERAL SERVICES
Department of General Services
State of California
Real Estate Services Division
Project Management & Development Branch
707 Third Street, Suite 4-105
West Sacramento, California 95605

NICHOLS MELBURG & ROSSETTO ARCHITECTS + ENGINEERS
300 Knollcrest Drive
Redding, CA. 96002
(530) 222-3300 (530) 222-3538 FAX
http://www.nmrdesign.com

Copyright © 2020
All ideas, designs, arrangements and plans indicated or represented by this drawing are owned by, and the property of, NICHOLS, MELBURG and ROSSETTO and were created, evolved and developed for use on, and in conjunction with, the specified project. None of such ideas, designs, arrangements or plans shall be used by, or disclosed to any person, firm or corporation for any purpose whatsoever without the written permission of NICHOLS, MELBURG and ROSSETTO.

LICENSE STAMPS

LICENSED ARCHITECT — KYLE MATTHEW NICHOLS — No. C-27504 — REN. 10/31/21 — STATE OF CALIFORNIA

CONSULTANT

DRAWING STATUS
CONSTRUCTION DOCUMENTS

ISSUE

No.	Date	Description
1	10/20/2020	INITIAL PLAN REVIEW
2	01/22/2021	AGENCY RESUBMITTAL
3	03/22/2021	AGENCY RESUBMITTAL

If drawing is not 30" x 42" it is a reduced print

PROJECT
RESIDENTIAL CENTER, UKIAH: REPLACEMENT OF EXISTING RESIDENTIAL CENTER
440 EAST HILL ROAD
WILLITS, CALIFORNIA 95490
MENDOCINO COUNTY
CALIFORNIA CONSERVATION CORP

Supervisor	Designed	Drawn
KJM	DMH	MJO

DSA Application No.
02-118630

SHEET TITLE
RECREATION BLDG. FLOOR PLAN & DIMENSION PLAN & ENLARGED PLANS

DGS Project Number	NMR Project Number
000000000001826	18-6456

Reference North — Sheet Scale: As indicated
Sheet Number: A201R

ISSUE DATE
July 9, 2021

Plot Date: 3/19/2021 9:27:55 AM
File Name: BIM 360://CCC-Willits Residential Center/A_CCC-WRC-REC.rvt

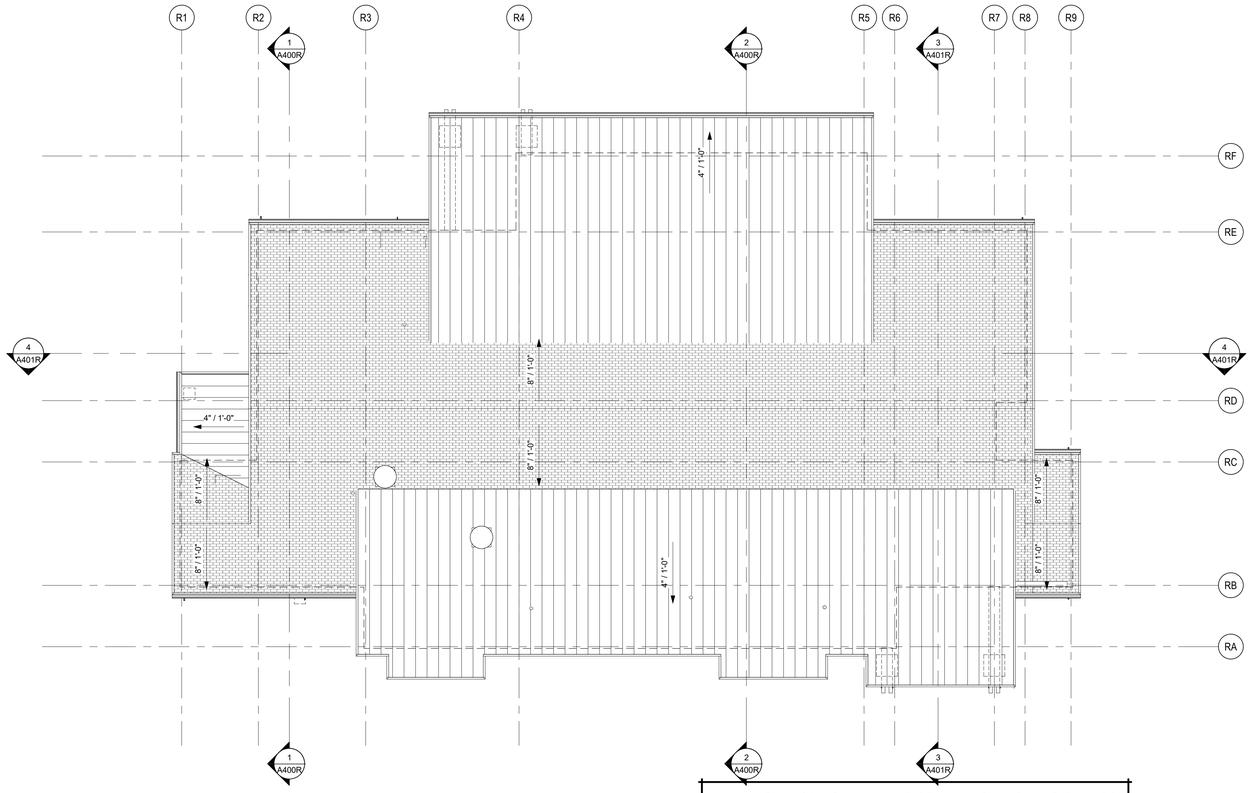

NORTH

RECREATION BUILDING ROOF PLAN

SCALE: 1/8" = 1'-0"

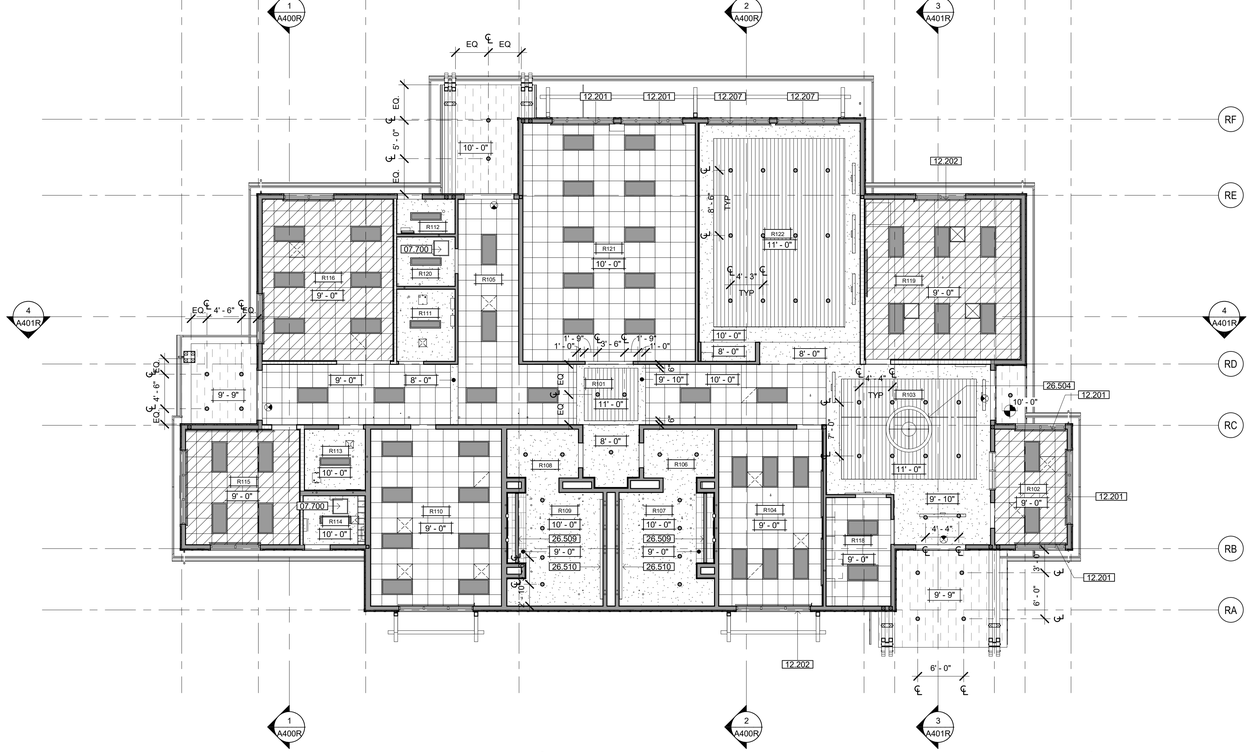

NORTH

RECREATION BUILDING REFLECTED CEILING PLAN

SCALE: 1/8" = 1'-0"

KEYNOTES

07.700	ACCESS HATCH - REFER TO 12/A931
12.201	SINGLE ROLL WINDOW SHADE, MANUAL. SEE DETAIL 18/A961
12.202	DOUBLE ROLL WINDOW SHADE, MANUAL. SEE DETAIL 20/A961
12.207	SINGLE ROLL WINDOW SHADE, MANUAL. SEE DETAIL 17/A961
26.504	PENDANT LIGHT FIXTURE
26.509	LINEAR LED LIGHT FIXTURE RECESSED INTO CEILING
26.510	WALL MOUNTED UP/DOWN LIGHT FIXTURE

ROOF PLAN NOTES

A. ALL PIPE PENETRATIONS NOT SHOWN. SEE MECHANICAL & PLUMBING DRAWINGS FOR LOCATION INFORMATION, SEE ROOF PIPE PENETRATION DETAIL 5/A810.

B. HVAC CONDENSATE DRAIN PIPES NOT SHOWN. SEE MECHANICAL & PLUMBING DRAWINGS FOR REQUIREMENTS.

ROOF PLAN LEGEND

REFER TO DRAWING G120 FOR TYPICAL ROOF CONSTRUCTION ASSEMBLIES

- ASPHALT SHINGLE ROOFING - SEE SHEET A810
- PREFINISHED METAL ROOFING - SEE SHEET A810
- ROOF DRAIN & OVERFLOW - SEE DETAIL 13 / A810

GENERAL RCP NOTES

A. MAINTAIN CEILING HEIGHTS AND LIGHTING LAYOUT PATTERNS SHOWN, UNLESS OTHERWISE APPROVED BY ARCHITECT. CONFLICTS CAUSED BY DUCTWORK, SPRINKLER PIPING, CONDUIT, AND/OR OTHER ITEMS OR FEATURES OF CONSTRUCTION SHALL NOT CONSTITUTE CAUSE FOR VARIANCE FROM CEILING HEIGHTS AND/OR LIGHTING LAYOUTS INDICATED IN THESE DRAWINGS. COORDINATE ALL WORK TO ACHIEVE HEIGHTS AND LAYOUTS AS INDICATED IN THESE DRAWINGS.

B. REFER TO MECHANICAL, FIRE PROTECTION, ELECTRICAL, SECURITY, AND AUDIOVISUAL DRAWINGS FOR ADDITIONAL CONSTRUCTION FEATURES, SYSTEMS, FIXTURES, AND EQPT. LOCATED IN, ON, AND ABOVE CEILINGS. TO THE EXTENT THAT THESE ITEMS ARE SHOWN ON REFLECTED CEILING PLANS, THEY ARE FOR GENERAL INFORMATION AND LAYOUT PURPOSES ONLY, AND DO NOT NECESSARILY REPRESENT ACTUAL SCOPE OR QUANTITIES REQUIRED FOR THE PROJECT. ALL QUANTITIES TO BE VERIFIED.

C. AT ACOUSTICAL TILE CEILINGS, ALL FIXTURES AND EQUIPMENT SHALL BE CENTERED WITHIN ACOUSTICAL CEILING TILES, IN BOTH DIRECTIONS.

D. SPRINKLER HEAD LOCATIONS SHALL RESULT IN A UNIFORM AND REPETITIVE PATTERN FOR EACH AREA, AND SHALL BE LOCATED SYMMETRICALLY WITH RESPECT TO WALLS, CEILING GRID PATTERNS, AND LIGHT FIXTURES. SPRINKLER HEADS IN ACOUSTICAL TILE CEILINGS SHALL BE LOCATED IN THE CENTERS OF THE CEILING TILES.

E. TYP. EXTERIOR SOFFIT HEIGHT IS AT UNDERSIDE OF STRUCTURAL FRAMING U.O.N.

F. AT ACOUSTICAL TILE CEILING SYSTEM CEILING GRID LAYOUT IS TO BE CENTERED BOTH DIRECTIONS IN EACH ROOM, WITH BORDER PANELS NO SMALLER THAN 4".

RCP LEGEND

REFER TO DRAWING G120 FOR TYPICAL CEILING CONSTRUCTION ASSEMBLIES

- 2' x 2' SUSPENDED ACOUSTICAL TILE CEILING SYSTEM — C 3
- 5/8" GYPSUM BOARD CEILING — C 2
- SUSPENDED WOOD CEILING — C 4
- EXTERIOR FIBER CEMENT SOFFIT, NON-VENTED
- 2' X 2' SUSPENDED ACOUSTICAL TILE CEILING SYSTEM WITH 5/8" GYPSUM BOARD CEILING APPLIED TO UNDERSIDE OF TRUSSES ABOVE CEILING — C 2 + C 3
- +X'-X" INDICATES HEIGHT OF FINISHED CEILING OR SOFFIT (FROM REFERENCE FLOOR ELEVATION)
- 2'x4' LAY-IN LIGHT FIXTURE - SEE ELECTRICAL DRAWINGS
- SUSPENDED LIGHT FIXTURE - SEE ELECTRICAL DRAWINGS
- 1'x4' SURFACE MOUNTED LIGHT FIXTURE - SEE ELECTRICAL DRAWINGS
- 6" DIAMETER RECESSED CAN LIGHT FIXTURE - SEE ELECTRICAL DRAWINGS
- LINEAR LIGHT FIXTURE - SEE ELECTRICAL DRAWINGS
- 8" DIAMETER PENDANT LIGHT FIXTURE - SEE ELECTRICAL DRAWINGS
- SUPPLY AIR DIFFUSERS - SEE MECHANICAL DRAWINGS
- RETURN AIR DIFFUSER - SEE MECHANICAL DRAWINGS
- EXHAUST - SEE MECHANICAL DRAWINGS
- LINEAR SLOT DIFFUSER - SEE MECHANICAL DRAWINGS

IDENTIFICATION STAMP
DIV. OF THE STATE ARCHITECT
APP: 02-118630 INC:
REVIEWED FOR
SS ☐ FLS ☐ ACS ☑
DATE: 04/13/2021

OFFICE OF THE STATE FIRE MARSHAL
APPROVED FIRE AND PANIC ONLY
Approval of this plan does not authorize or approve any omission or deviation from applicable regulations. Final approval is subject to field inspection. One set of approved plans shall be available on the project site at all times.
PERMIT NO. 20 N 2332 CP
REVIEWED BY: LEO CATAYLO, OSFM
DATE: 4 / /2021

DGS GENERAL SERVICES
Department of General Services
State of California
Real Estate Services Division
Project Management & Development Branch
707 Third Street, Suite 4-105
West Sacramento, California 95605

NICHOLS MELBURG & ROSSETTO
ARCHITECTS + ENGINEERS
300 Knollcrest Drive
Redding, CA. 96002
(530) 222-3300 (530) 222-3538 FAX
http://www.nmrdesign.com

Copyright © 2020
All ideas, designs, arrangements and plans indicated or represented by this drawing are owned by, and the property of, NICHOLS, MELBURG and ROSSETTO and were created, evolved and developed for use on, and in conjunction with, the specified project. None of such ideas, designs, arrangements or plans shall be used by, or disclosed to any person, firm or corporation for any purpose whatsoever without the written permission of NICHOLS, MELBURG and ROSSETTO.

LICENSE STAMPS

LICENSED ARCHITECT KYLE MATTHEW ROSSETTO C 21504 REN. 10/31/21 STATE OF CALIFORNIA

CONSULTANT

DRAWING STATUS
CONSTRUCTION DOCUMENTS

ISSUE

No.	Date	Description
1	10/20/2020	INITIAL PLAN REVIEW
2	01/22/2021	AGENCY RESUBMITTAL
3	03/22/2021	AGENCY RESUBMITTAL

If drawing is not 30" x 42" it is a reduced print

PROJECT
RESIDENTIAL CENTER, UKIAH: REPLACEMENT OF EXISTING RESIDENTIAL CENTER
440 EAST HILL ROAD
WILLITS, CALIFORNIA 95490
MENDOCINO COUNTY
CALIFORNIA CONSERVATION CORP

Supervisor	Designed	Drawn
KJM	DMH	MJO

DSA Application No.
02-118630

SHEET TITLE
RECREATION BLDG. ROOF PLAN & REFLECTED CEILING PLAN

DGS Project Number: 00000000001826
NMR Project Number: 18-6456

Reference North
Sheet Scale: As indicated
Sheet Number: A211R

ISSUE DATE
July 9, 2021

Plot Date: 3/19/2021 1:07:52 PM
File Name: BIM 360://CCC-Willits Residential Center/A_CCC-WRC-REC.rvt

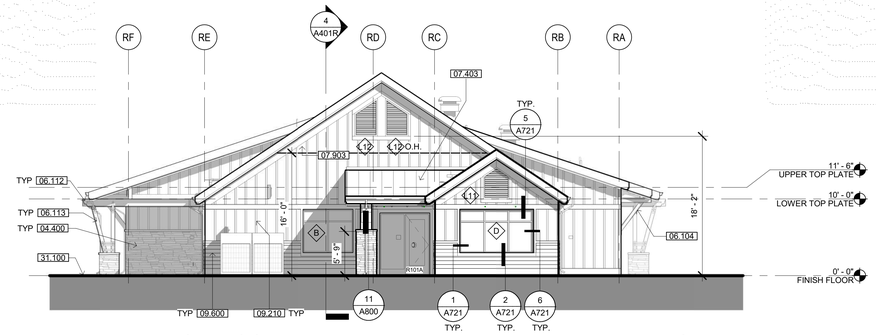

1 NORTH ELEVATION

SCALE: 1/8" = 1'-0"

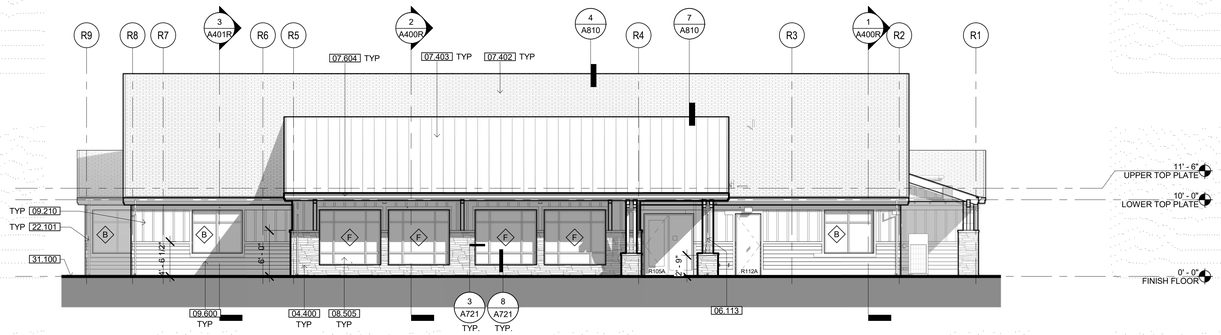

2 EAST ELEVATION

SCALE: 1/8" = 1'-0"

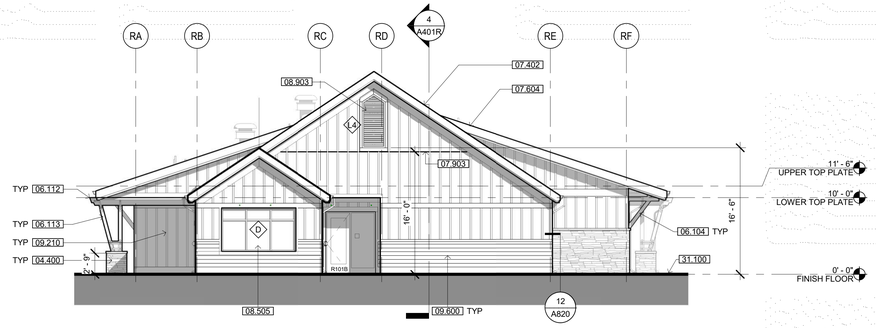

3 SOUTH ELEVATION

SCALE: 1/8" = 1'-0"

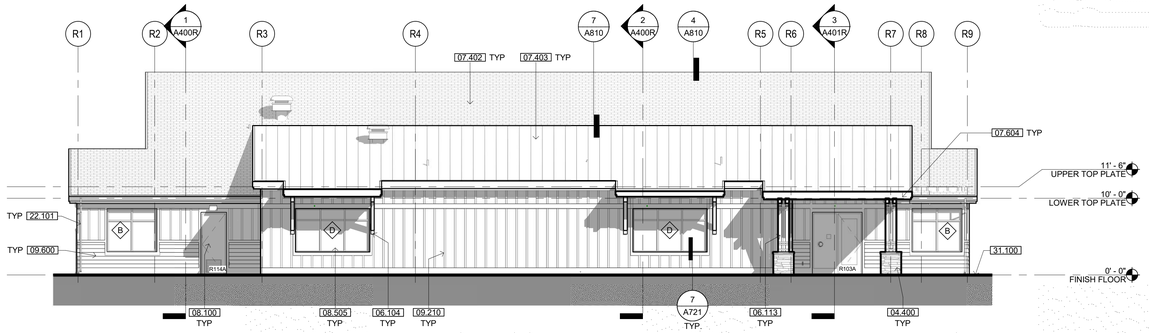

4 WEST ELEVATION

SCALE: 1/8" = 1'-0"

KEYNOTES

04.400	ADHERED STONE VENEER WAINSCOT
06.104	HEAVY TIMBER KNEE BRACE, PAINTED
06.112	HEAVY TIMBER BEAM, PAINTED
06.113	HEAVY TIMBER COLUMN, PAINTED
07.402	COMPOSITION SHINGLE ROOFING
07.403	STANDING SEAM METAL ROOF SYSTEM, FACTORY PRE-FINISHED
07.604	FASCIA & TRIM, PAINTED
07.903	BOARD & BATTEN SIDING JOINT FLASHING, SEE DETAIL 16/A800
08.100	HOLLOW METAL DOOR
08.505	DUAL-GLAZED VINYL WINDOWS
08.903	OUTDOOR AIR INTAKE LOUVER
09.210	FIBER CEMENT BATTENS O/ FIBER CEMENT SIDING PANELS O/ RIGID INSULATION
09.600	BASE-SEE FINISH SCHEDULE
22.101	RAINWATER LEADER-SEE DETAILS 5 & 9/A820
31.100	APPROXIMATE FINISH GRADE

EXTERIOR ELEV. LEGEND

B##X — DOOR TAG - SEE SCHEDULE, SHEET A710

X — WINDOW TAG - SEE SCHEDULE, SHEET A720

IDENTIFICATION STAMP
DIV. OF THE STATE ARCHITECT
APP: 02-118630 INC:
REVIEWED FOR
SS ☐ FLS ☐ ACS ☑
DATE: 04/13/2021

OFFICE OF THE STATE FIRE MARSHAL
APPROVED FIRE AND PANIC ONLY
Approval of this plan does not authorize or approve any omission or deviation from applicable regulations. Final approval is subject to field inspection. One set of approved plans shall be available on the project site at all times.
PERMIT NO. 20-N-2332-CP
REVIEWED BY: LEO CATAYLO, OSFM
DATE: 4 / /2021

GENERAL SERVICES
Department of General Services
State of California
Real Estate Services Division
Project Management & Development Branch
707 Third Street, Suite 4-105
West Sacramento, California 95605

NICHOLS MELBURG & ROSSETTO
ARCHITECTS + ENGINEERS
300 Knollcrest Drive
Redding, CA. 96002
(530) 222-3300 (530) 222-3538 FAX
http://www.nmrdesign.com

Copyright © 2020
All ideas, designs, arrangements and plans indicated or represented by this drawing are owned by, and the property of, NICHOLS, MELBURG and ROSSETTO and were created, evolved and developed for use on, and in conjunction with, the specified project. None of such ideas, designs, arrangements or plans shall be used by, or disclosed to any person, firm or corporation for any purpose whatsoever without the written permission of NICHOLS, MELBURG and ROSSETTO

LICENSE STAMPS

LICENSED ARCHITECT KYLE MATTHEW ROSSETTO C-21504 RENEWAL 10/31/21 STATE OF CALIFORNIA

CONSULTANT

DRAWING STATUS
CONSTRUCTION DOCUMENTS

ISSUE

No.	Date	Description
1	10/20/2020	INITIAL PLAN REVIEW
2	01/22/2021	AGENCY RESUBMITTAL
3	03/22/2021	AGENCY RESUBMITTAL

If drawing is not 30" x 42" it is a reduced print

PROJECT
RESIDENTIAL CENTER, UKIAH: REPLACEMENT OF EXISTING RESIDENTIAL CENTER
440 EAST HILL ROAD
WILLITS, CALIFORNIA 95490
MENDOCINO COUNTY
CALIFORNIA CONSERVATION CORP

Supervisor	Designed	Drawn
KJM	DMH	MO

DSA Application No.
02-118630

SHEET TITLE
RECREATION BLDG. EXTERIOR ELEVATIONS

DGS Project Number: 000000000001826
NMR Project Number: 18-6456

Reference North: NORTH
Sheet Scale: 1/8" = 1'-0"
Sheet Number: A300R

ISSUE DATE
July 9, 2021

Plot Date: 5/19/2021 9:30:20 AM
File Name: 8184 3600 / CCC-Willits Residential Center/A_CCC-WRC-REC.rvt

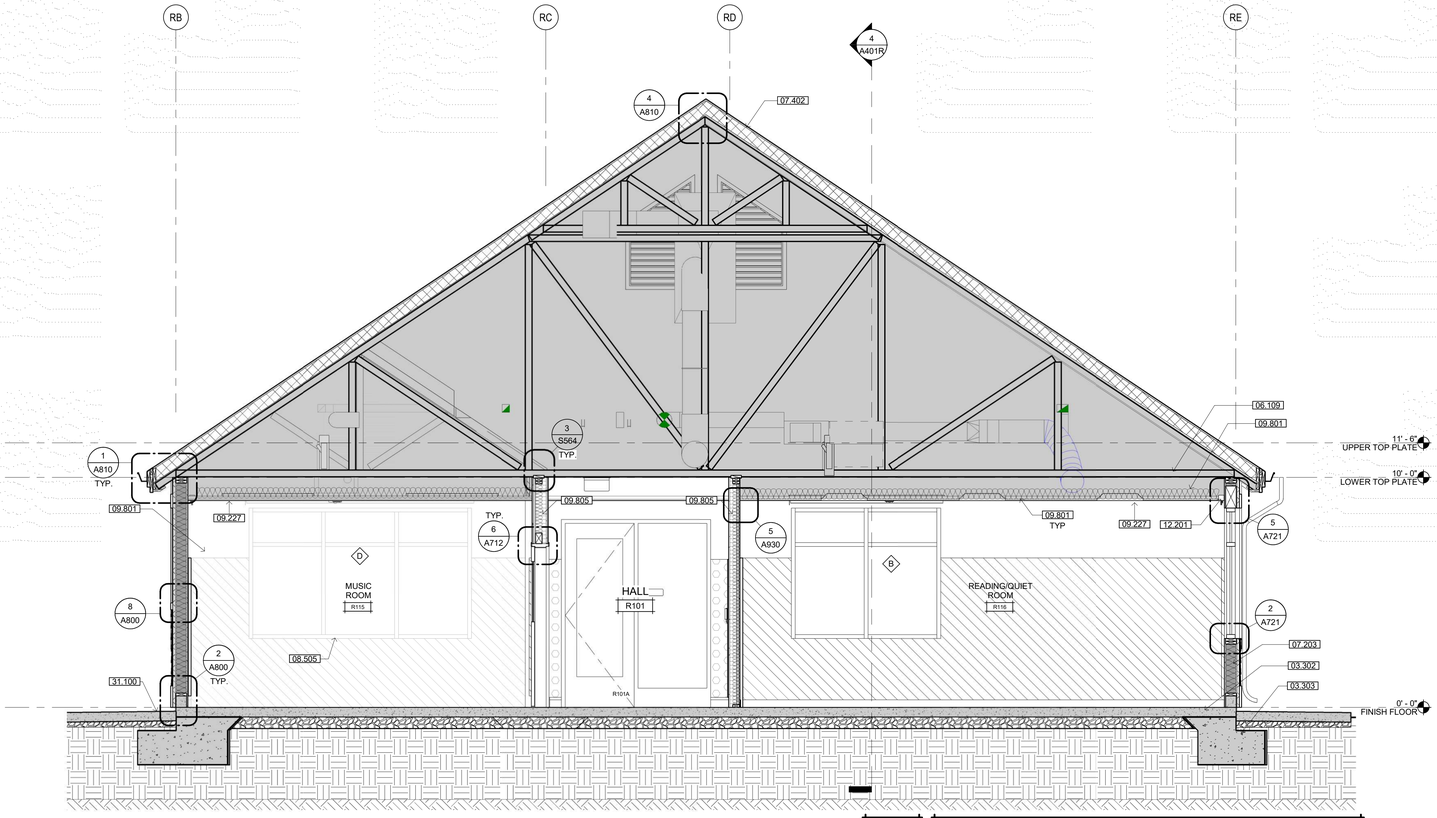

1 BUILDING SECTION

SCALE: 3/8" = 1'-0"

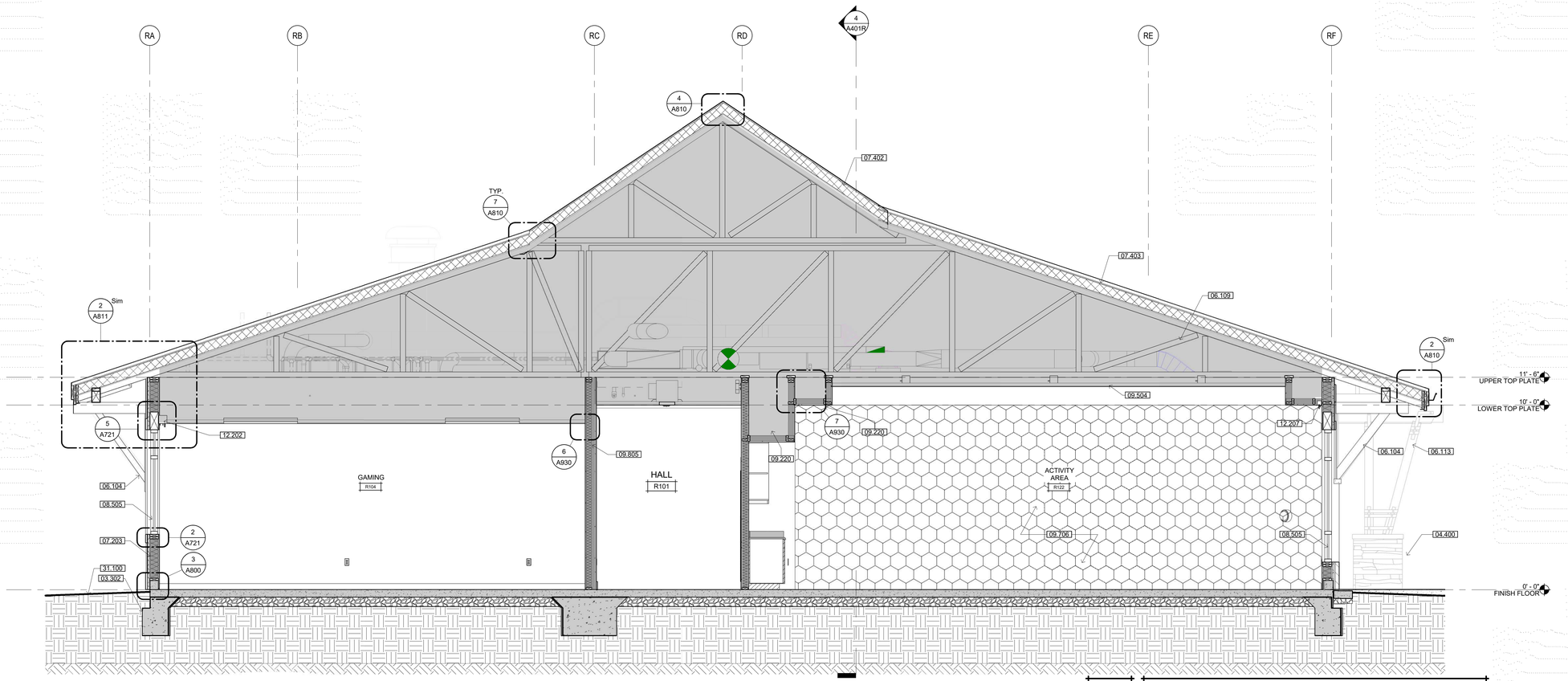

2 BUILDING SECTION

SCALE: 3/8" = 1'-0"

KEYNOTES

03.302	CONCRETE SLAB, SEE STRUCTURAL DRAWINGS
03.303	CONCRETE FOOTING, SEE STRUCTURAL DRAWINGS
04.400	ADHERED STONE VENEER WAINSCOT
06.104	HEAVY TIMBER KNEE BRACE, PAINTED
06.109	WOOD FRAMED TRUSS
06.113	HEAVY TIMBER COLUMN, PAINTED
07.203	BATT INSULATION
07.402	COMPOSITION SHINGLE ROOFING
07.403	STANDING SEAM METAL ROOF SYSTEM, FACTORY PRE-FINISHED
08.505	DUAL-GLAZED VINYL WINDOWS
09.220	GYPSUM BOARD SOFFIT
09.227	5/8" GYPSUM BOARD APPLIED TO BOTTOM OF TRUSS
09.504	SUSPENDED WOOD CEILING
09.706	KUVIO ROLL BY LUMICOR ACCENT WALL
09.801	SOUND BATT INSULATION ABOVE SUSPENDED CEILING
09.805	ACOUSTIC BATT INSULATION
12.201	SINGLE ROLL WINDOW SHADE, MANUAL. SEE DETAIL 18/A961
12.202	DOUBLE ROLL WINDOW SHADE, MANUAL. SEE DETAIL 20/A961
12.207	SINGLE ROLL WINDOW SHADE, MANUAL. SEE DETAIL 17/A961
31.100	APPROXIMATE FINISH GRADE

IDENTIFICATION STAMP
DIV. OF THE STATE ARCHITECT
APP: 02-118630 INC:
REVIEWED FOR
SS ☐ FLS ☐ ACS ☑
DATE: 04/13/2021

OFFICE OF THE STATE FIRE MARSHAL
APPROVED FIRE AND PANIC ONLY
Approval of this plan does not authorize or approve any omission or deviation from applicable regulations. Final approval is subject to field inspection. One set of approved plans shall be available on the project site at all times.
PERMIT NO. 20-N-2332-CP
REVIEWED BY: LEO CATAYLO, OSFM
DATE: 4 / /2021

DGS GENERAL SERVICES
Department of General Services
State of California
Real Estate Services Division
Project Management & Development Branch
707 Third Street, Suite 4-105
West Sacramento, California 95605

NICHOLS MELBURG & ROSSETTO
ARCHITECTS + ENGINEERS
300 Knollcrest Drive
Redding, CA. 96002
(530) 222-3300 (530) 222-3538 FAX
http://www.nmrdesign.com

Copyright © 2020
All ideas, designs, arrangements and plans indicated or represented by this drawing are owned by, and the property of, NICHOLS, MELBURG and ROSSETTO and were created, evolved and developed for use on, and in conjunction with, the specified project. None of such ideas, designs, arrangements or plans shall be used by, or disclosed to any person, firm or corporation for any purpose whatsoever without the written permission of NICHOLS, MELBURG and ROSSETTO

LICENSE STAMPS

LICENSED ARCHITECT KYLE MATTY C-21504 RENEWAL 10/31/21 STATE OF CALIFORNIA

CONSULTANT

DRAWING STATUS
CONSTRUCTION DOCUMENTS

ISSUE

No.	Date	Description
1	10/20/2020	INITIAL PLAN REVIEW
2	01/22/2021	AGENCY RESUBMITTAL
3	03/22/2021	AGENCY RESUBMITTAL

If drawing is not 30" x 42" it is a reduced print

PROJECT
RESIDENTIAL CENTER, UKIAH: REPLACEMENT OF EXISTING RESIDENTIAL CENTER
440 EAST HILL ROAD
WILLITS, CALIFORNIA 95490
MENDOCINO COUNTY
CALIFORNIA CONSERVATION CORP

Supervisor	Designed	Drawn
KJM	DMH	MO

DSA Application No.
02-118630

SHEET TITLE
RECREATION BLDG.
BUILDING SECTIONS

DGS Project Number	NMR Project Number
000000000001826	18-6456

Reference North: NORTH
Sheet Scale: 3/8" = 1'-0"
Sheet Number: A400R

ISSUE DATE
July 9, 2021

Plot Date: 5/19/2021 9:32:06 AM
File Name: 81M.900 /CCC-Willits Residential Center/A_CCC-WRC-REC.rvt

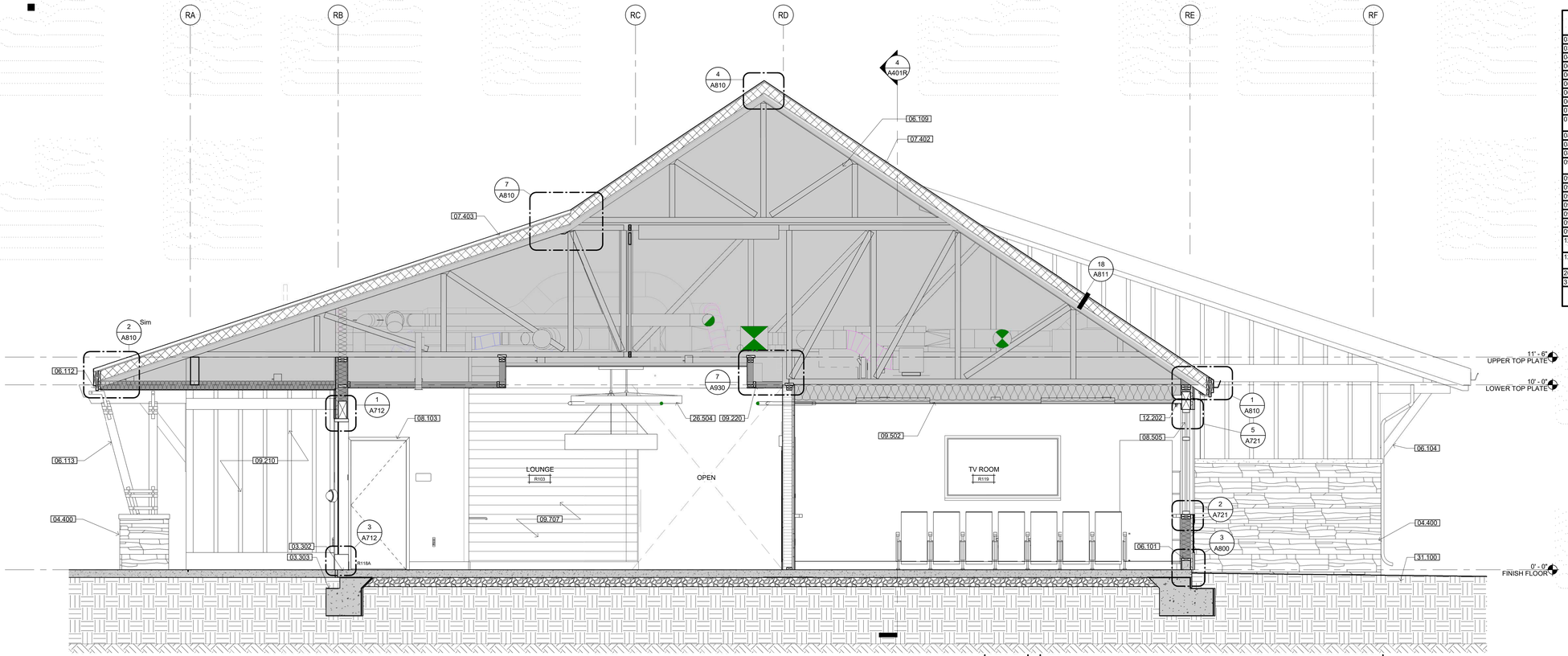

3 BUILDING SECTION

SCALE: 3/8" = 1'-0"

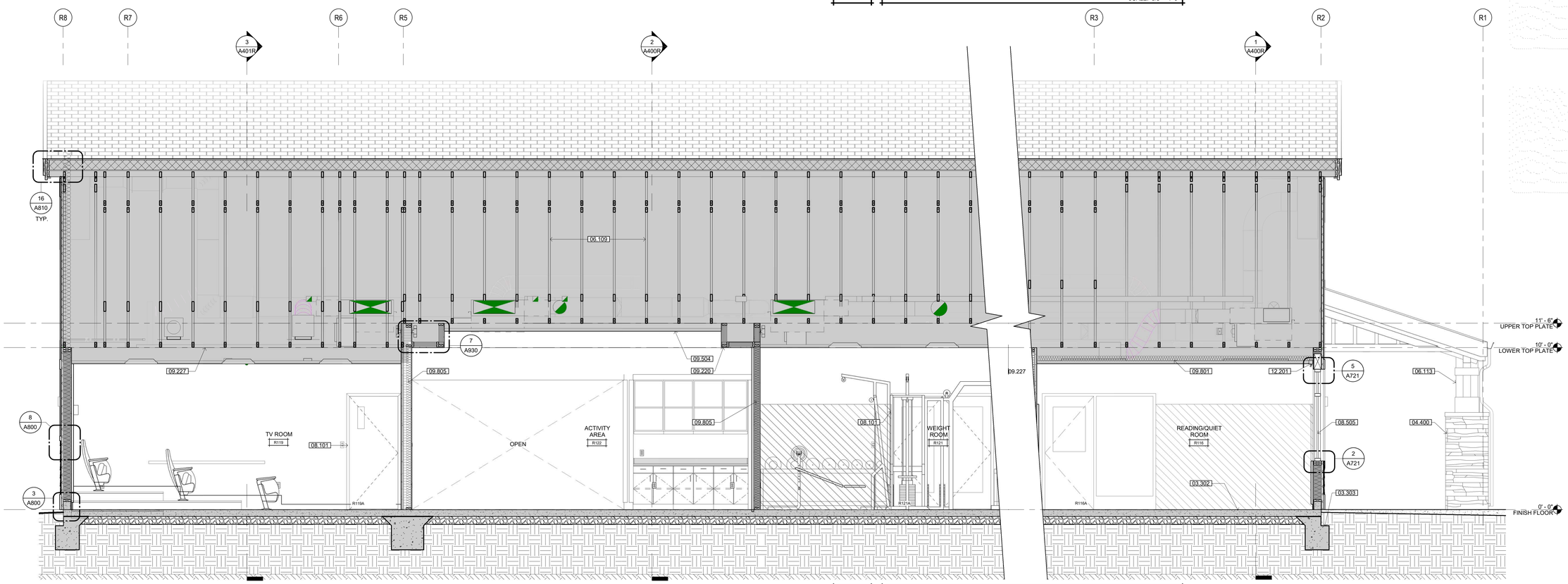

4 BUILDING SECTION

SCALE: 3/8" = 1'-0"

KEYNOTES

03.302	CONCRETE SLAB, SEE STRUCTURAL DRAWINGS
03.303	CONCRETE FOOTING, SEE STRUCTURAL DRAWINGS
04.400	ADHERED STONE VENEER WAINSCOT
06.101	2X FRAMING
06.104	HEAVY TIMBER KNEE BRACE, PAINTED
06.109	WOOD FRAMED TRUSS
06.112	HEAVY TIMBER BEAM, PAINTED
06.113	HEAVY TIMBER COLUMN, PAINTED
07.402	COMPOSITION SHINGLE ROOFING
07.403	STANDING SEAM METAL ROOF SYSTEM, FACTORY PRE-FINISHED
08.101	HOLLOW METAL FRAME
08.103	HOLLOW METAL DOOR & FRAME-SEE DOOR SCHEDULE
08.505	DUAL-GLAZED VINYL WINDOWS
09.210	FIBER CEMENT BATTENS O/ FIBER CEMENT SIDING PANELS O/ RIGID INSULATION
09.220	GYPSUM BOARD SOFFIT
09.227	5/8" GYPSUM BOARD APPLIED TO BOTTOM OF TRUSS
09.502	SUSPENDED ACOUSTICAL CEILING SYSTEM
09.504	SUSPENDED WOOD CEILING
09.707	RECLAIMED WOOD PLANK WALL SIDING O/ GYP. BD.
09.801	SOUND BATT INSULATION ABOVE SUSPENDED CEILING
09.805	ACOUSTIC BATT INSULATION
12.201	SINGLE ROLL WINDOW SHADE, MANUAL. SEE DETAIL 18/A961
12.202	DOUBLE ROLL WINDOW SHADE, MANUAL. SEE DETAIL 20/A961
26.504	PENDANT LIGHT FIXTURE
31.100	APPROXIMATE FINISH GRADE

IDENTIFICATION STAMP
DIV. OF THE STATE ARCHITECT
APP: 02-118630 INC:
REVIEWED FOR
SS ☐ FLS ☐ ACS ☑
DATE: 04/13/2021

OFFICE OF THE STATE FIRE MARSHAL
APPROVED FIRE AND PANIC ONLY
Approval of this plan does not authorize or approve any omission or deviation from applicable regulations. Final approval is subject to field inspection. One set of approved plans shall be available on the project site at all times.
PERMIT NO. 20-N-2332-CP
REVIEWED BY: LEO CATAYLO, OSFM
DATE: 4 / /2021

GENERAL SERVICES
Department of General Services
State of California
Real Estate Services Division
Project Management & Development Branch
707 Third Street, Suite 4-105
West Sacramento, California 95605

NICHOLS MELBURG & ROSSETTO
ARCHITECTS + ENGINEERS
300 Knollcrest Drive
Redding, CA. 96002
(530) 222-3300 (530) 222-3538 FAX
http://www.nmrdesign.com

Copyright © 2020
All ideas, designs, arrangements and plans indicated or represented by this drawing are owned by, and the property of, NICHOLS, MELBURG and ROSSETTO and were created, evolved and developed for use on, and in conjunction with, the specified project. None of such ideas, designs, arrangements or plans shall be used by, or disclosed to any person, firm or corporation for any purpose whatsoever without the written permission of NICHOLS, MELBURG and ROSSETTO.

LICENSE STAMPS

LICENSED ARCHITECT KYLE MATTY C-32504 REN. 10/31/21 STATE OF CALIFORNIA

CONSULTANT

DRAWING STATUS
CONSTRUCTION DOCUMENTS

ISSUE

No.	Date	Description
1	10/20/2020	INITIAL PLAN REVIEW
2	01/22/2021	AGENCY RESUBMITTAL
3	03/22/2021	AGENCY RESUBMITTAL

If drawing is not 30" x 42" it is a reduced print

PROJECT
RESIDENTIAL CENTER, UKIAH: REPLACEMENT OF EXISTING RESIDENTIAL CENTER
440 EAST HILL ROAD
WILLITS, CALIFORNIA 95490
MENDOCINO COUNTY
CALIFORNIA CONSERVATION CORP

Supervisor	Designed	Drawn
KJM	DMH	MO

DSA Application No.
02-118630

SHEET TITLE
RECREATION BLDG.
BUILDING SECTIONS

DGS Project Number	NMR Project Number
00000000001826	18-6456

Reference North
Sheet Scale 3/8" = 1'-0"
Sheet Number A401R

ISSUE DATE
July 9, 2021

Plot Date: 3/19/2021 8:32:57 AM
File Name: BIM 360://CCC-Willits Residential Center/A_CCC-WRC-REC.rvt

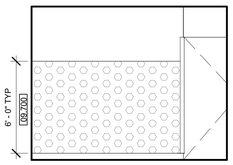

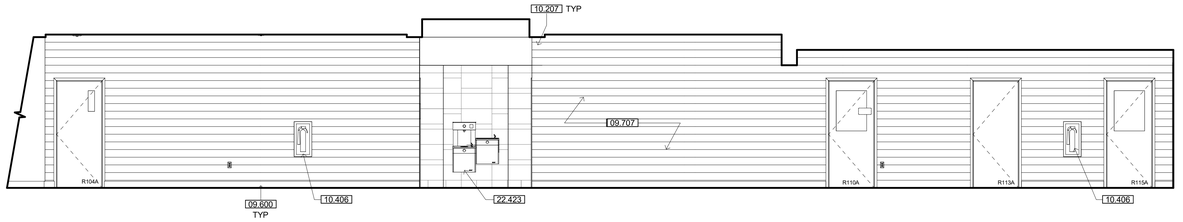

1 R101 - HALL - EAST
1/4" = 1'-0"

2 R101 - HALL - WEST
1/4" = 1'-0"

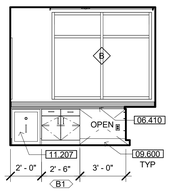

3 R102 - NIGHT WATCH - EAST
1/4" = 1'-0"

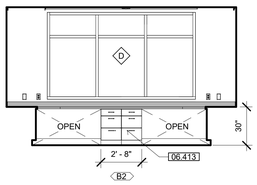

4 R102 - NIGHT WATCH - SOUTH
1/4" = 1'-0"

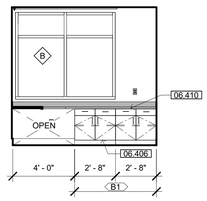

5 R102 - NIGHT WATCH - WEST
1/4" = 1'-0"

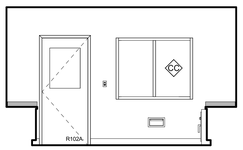

6 R102 - NIGHT WATCH - NORTH
1/4" = 1'-0"

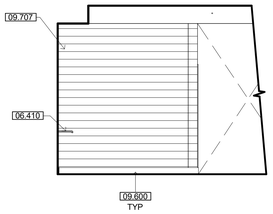

7 R103 - LOUNGE - NORTH
1/4" = 1'-0"

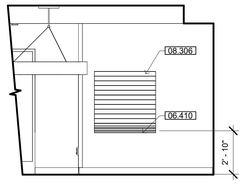

8 R103 - LOUNGE - WEST
1/4" = 1'-0"

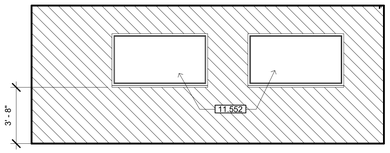

9 R104 - GAMING - SOUTH
1/4" = 1'-0"

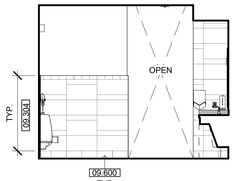

10 R107 - MEN'S RESTROOM - A
1/4" = 1'-0"

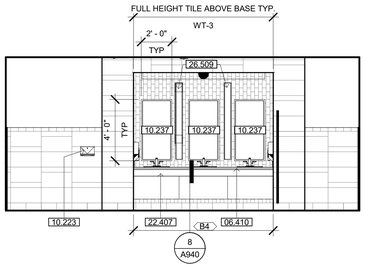

11 R107 - MEN'S RESTROOM - B
1/4" = 1'-0"

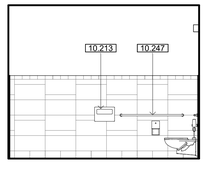

12 R107 - MEN'S RESTROOM - C
1/4" = 1'-0"

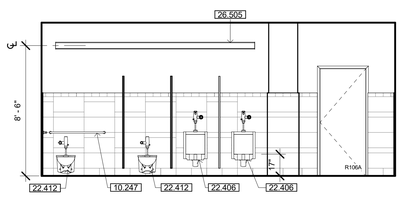

13 R107 - MEN'S RESTROOM - D
1/4" = 1'-0"

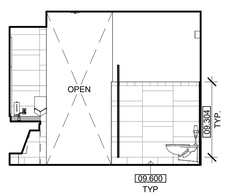

14 R109 - WOMEN'S RESTROOM - A
1/4" = 1'-0"

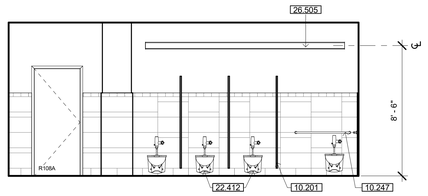

15 R109 - WOMEN'S RESTROOM - B
1/4" = 1'-0"

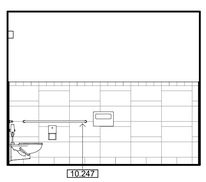

16 R109 - WOMEN'S RESTROOM - C
1/4" = 1'-0"

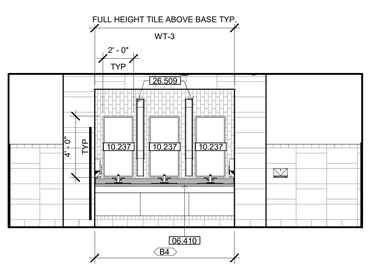

17 R109 - WOMEN'S RESTROOM - D
1/4" = 1'-0"

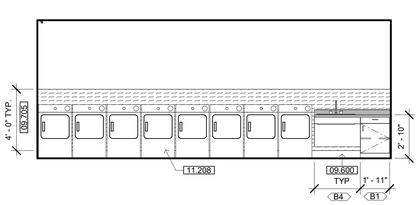

18 R110 - LAUNDRY - NORTH
1/4" = 1'-0"

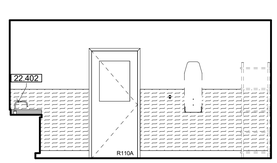

19 R110 - LAUNDRY - EAST
1/4" = 1'-0"

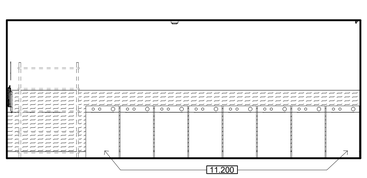

20 R110 - LAUNDRY - SOUTH
1/4" = 1'-0"

KEYNOTES

06.406	COUNTER AND BASE CABINET
06.410	SOLID SURFACE COUNTERTOP
06.413	CABINET LOCK AS SHOWN
08.306	COUNTER-STYLE COILING DOOR, FACTORY PRE-FINISHED
09.304	TILE WAINSCOT-SEE FINISH SCHEDULE
09.600	BASE-SEE FINISH SCHEDULE
09.700	WAINSCOT-SEE FINISH SCHEDULE
09.705	FRP PANEL-SEE FINISH SCHEDULE
09.707	RECLAIMED WOOD PLANK WALL SIDING O/ GYP. BD.
10.201	TOILET COMPARTMENT - OVERHEAD BRACE - SEE 8/A960
10.207	CORNER GUARD - SEE FINISH SCHEDULE
10.213	SURFACE MOUNTED TOILET SEAT COVER DISPENSER
10.223	SURFACE MOUNTED PAPER TOWEL DISPENSER
10.237	24"W X 48"H MIRROR
10.247	GRAB BARS, 48" AT SIDE & 42" AT BACK - SEE DETAIL 4/A960
10.406	SEMI-RECESSED FIRE EXTINGUISHER CABINET PER DETAIL 2B/A960
11.200	WASHER, O.F.O.I. CONTRACTOR TO PROVIDE ELECTRIC, WATER & DRAIN CONNECTIONS. CLOTHES WASHER TO HAVE MAX. WATER FACTOR (WF) THAT WILL REDUCE WATER USE BY 10%. AT LEAST ONE UNIT SHALL COMPLY WITH CBC 11B-611.1 THROUGH 11B-611.4 (PROVIDE CLEAR FLOOR SPACE FOR PARALLEL APPROACH CENTERED ON APPLIANCE, OPERABLE PARTS WITHIN ACCESSIBLE REACH RANGE SPECIFIED IN CBC 11B-309, APPLIANCE DOOR 36" MAX. A.F.F. FOR TOP LOADING MACHINES OR 15"-36" A.F.F. FOR FRONT LOADING
11.207	SAFE (OFOI)
11.208	DRYER, O.F.O.I. CONTRACTOR TO PROVIDE ELECTRIC AND VENT CONNECTIONS. AT LEAST ONE UNIT SHALL COMPLY WITH CBC 11B-611.1 THROUGH 11B-611.4 (PROVIDE CLEAR FLOOR SPACE FOR PARALLEL APPROACH CENTERED ON APPLIANCE, OPERABLE PARTS WITHIN ACCESSIBLE REACH RANGE SPECIFIED IN CBC 11B-309, APPLIANCE DOOR 36" MAX. A.F.F. FOR TOP LOADING MACHINES OR 15"-36" A.F.F. FOR FRONT LOADING
11.552	WALL MOUNTED TELEVISION, C.F.C.I - SEE DETAIL 17/A960
22.402	SINK - SEE PLUMBING DRAWINGS
22.406	ACCESSIBLE URINAL - SEE PLUMBING DRAWINGS
22.407	ACCESSIBLE SINK - SEE PLUMBING DRAWINGS
22.412	ACCESSIBLE WALL HUNG TOILET
22.423	ACCESSIBLE DRINKING FOUNTAIN HI-LO WITH BOTTLE FILL-SEE DETAIL 4/0212
26.505	RECESSED LIGHT FIXTURE
26.509	LINEAR LED LIGHT FIXTURE RECESSED INTO CEILING

INTERIOR ELEV. LEGEND

###X	CASEWORK TAG - SEE SHEET A940
X	SIGNAGE TAG - SEE SHEET A965
B##X	DOOR TAG - SEE SCHEDULE, SHEET A710
X	WINDOW TAG - SEE SCHEDULE, SHEET A720
	GYPSUM BOARD - PAINT
	WALL TILE WT-1/2 OVER CEMENTITIOUS BACKER BOARD
	WALL TILE WT-3 OVER CEMENTITIOUS BACKER BOARD
	FIBER REINFORCED PLASTIC (FRP) WALL PROTECTION OVER GYPSUM BOARD
	WALL PROTECTION OVER GYPSUM BOARD
	ACOUSTIC WALL PANELS AWP-2 OVER GYPSUM BOARD
	RECLAIMED REDWOOD PLANKS OVER GYPSUM BOARD
	ACOUSTIC WALL TILE AWT-4 OVER GYPSUM BOARD

INTERIOR ELEV. GEN. NOTES

A. GENERAL CONTRACTOR TO PROVIDE STRUCTURAL SUPPORT, BACKING AND/OR METAL REINFORCEMENT IN STUD WALLS AT ALL CASEWORK, CABINETS, SHELVING, EQUIPMENT ETC. REFER TO G212 & G213 FOR TYPICAL MOUNTING HEIGHTS AND ARRANGEMENTS OF COMMON SPECIALTY ITEMS INCLUDING SHOWERS AND TOILET ROOMS.

B. SEE SHEET 18/A960 FOR TYP. ACCESSORY MOUNTING

C. SEE MECHANICAL, ELECTRICAL & LOW VOLTAGE DRAWINGS FOR EXTENT AND LOCATION OF ADDITIONAL WALL MOUNTED ITEMS SUCH AS CARD READERS, THERMOSTATS, SWITCHES, OUTLETS, CLOCKS, NURSECALL LIGHTS, FIRE ALARM, ETC. LOCATE ALL OUTLETS, SWITCHES, EQUIP., RECEPTACLE BOXES & OTHER SIMILAR RELATED ITEMS FOR OWNER'S FINAL APPROVAL PRIOR TO CONDUIT/PIPE INSTALLATION.

D. CONTRACTOR TO COORDINATE LOCATION OF CONTRACTOR OR OWNER FURNISHED ITEMS.

E. REFER TO FINISH SCHEDULE AND SPECIFICATIONS FOR SPECIFIC FINISH MATERIAL.

F. ALL VERTICAL DIMENSIONS ARE FROM FINISHED FLOOR, U.N.O.

G. ALL RECESSED SPECIALTIES SHOWN ON ELEVATIONS THAT ARE LOCATED IN FIRE RATED WALLS ARE TO BE 5-SIDED WITH 5/8" TYPE 'X' GYPBOARD SIMILAR TO 13/A901

H. WHERE OUTLETS, MONITORS AND LIGHT SWITCHES ARE NOT DIMENSIONED AT A GIVEN ELEVATION, CAN BE ASSUMED TO BE SIMILAR TO THE ONE ON THE ELEVATION THAT IS DIMENSIONED. WHERE OUTLETS ARE DIMENSIONED ON AN ELEVATION THE TYPICAL FRAMING MUST BE ALTERED AND/OR STUDS HEADED OFF TO ACCOMMODATE DIMENSIONED LOCATIONS AND SHOWN.

I. ALL WALL SURFACES IN NEED OF REPAIR SHALL BE FILLED, SPACKLED AND TEXTURED TO MATCH THE EXISTING WALLS. FINISH AS SPECIFIED.

BUILT-IN CASEWORK NOTES

AA. PROVIDE BACKSPLASH AND ENDSPLASH OF MATERIAL MATCHING COUNTERTOP ON ALL COUNTERTOPS U.O.N. BACKSPLASH TO RETURN AT CABINET ENDS - SEE DETAIL OR NOTES FOR HEIGHTS.

BB. PROVIDE PLAM END PANEL WHERE COUNTERTOP ENDS WITHOUT BASE UNIT OR SUPPORTING WALL.

CC. PROVIDE "FLOATING WALL-MOUNT BRACKET" @ 32" O.C. AT ANY OPEN COUNTER WITH SPAN GREATER THAN 3'-0" WIDTH. SEE 10/A940. CONTRACTOR TO VERIFY COORDINATION OF TRADES FOR IN-WALL INSTALLATION

DD. PROVIDE (1) ADJUSTABLE SHELF AT BASE CABINETS EXCEPT SINK BASE, U.O.N.

EE. FIELD VERIFY ALL DIMENSIONS AND EQUIPMENT SIZES PRIOR TO CASEWORK FABRICATION.

FF. PROVIDE 3" DIAMETER GROMMETS AT BACK OF COUNTERTOP AS DIRECTED BY OWNER.

GG. ALL SHELVES ARE ADJUSTABLE, U.O.N.

IDENTIFICATION STAMP
DIV. OF THE STATE ARCHITECT
APP: 02-118630 INC:
REVIEWED FOR
SS ☐ FLS ☐ ACS ☑
DATE: 04/13/2021

OFFICE OF THE STATE FIRE MARSHAL
APPROVED FIRE AND PANIC ONLY
Approval of this plan does not authorize or approve any omission or deviation from applicable regulations. Final approval is subject to field inspection. One set of approved plans shall be available on the project site at all times.
PERMIT NO. 20-N-2332-CP
REVIEWED BY: LEO CATAYLO, OSFM
DATE: 4 / /2021

DGS GENERAL SERVICES
Department of General Services
State of California
Real Estate Services Division
Project Management & Development Branch
707 Third Street, Suite 4-105
West Sacramento, California 95605

NICHOLS MELBURG & ROSSETTO
ARCHITECTS + ENGINEERS
300 Knollcrest Drive
Redding, CA. 96002
(530) 222-3300 (530) 222-3538 FAX
http://www.nmrdesign.com

Copyright © 2020
All ideas, designs, arrangements and plans indicated or represented by this drawing are owned by, and the property of, NICHOLS, MELBURG and ROSSETTO and were created, evolved and developed for use on, and in conjunction with, the specified project. None of such ideas, designs, arrangements or plans shall be used by, or disclosed to any person, firm or corporation for any purpose whatsoever without the written permission of NICHOLS, MELBURG and ROSSETTO

LICENSE STAMPS

LICENSED ARCHITECT KYLE MATTHEW JOHNSON 21504 RENEWAL 10/31/21 STATE OF CALIFORNIA

CONSULTANT

DRAWING STATUS
CONSTRUCTION DOCUMENTS

ISSUE

No.	Date	Description
1	10/20/2020	INITIAL PLAN REVIEW
2	01/22/2021	AGENCY RESUBMITTAL
3	03/22/2021	AGENCY RESUBMITTAL

If drawing is not 30" x 42" it is a reduced print

PROJECT
RESIDENTIAL CENTER, UKIAH: REPLACEMENT OF EXISTING RESIDENTIAL CENTER
440 EAST HILL ROAD
WILLITS, CALIFORNIA 95490
MENDOCINO COUNTY
CALIFORNIA CONSERVATION CORP

Supervisor	Designed	Drawn
KJM	DMH	MO

DSA Application No.
02-118630

SHEET TITLE
RECREATION BLDG. INTERIOR ELEVATION

DGS Project Number
00000000001826

NMR Project Number
18-6456

Reference North

Sheet Scale
As indicated

Sheet Number
A500R

ISSUE DATE
July 9, 2021

Plot Date: 3/10/2021 1:27:32 PM
File Name: BIM 360://CCC-Willits Residential Center/A_CCC-WRC-REC.rvt

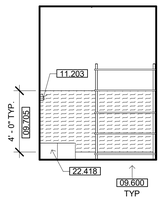

1 R111 - JANITOR CLOSET - EAST
1/4" = 1'-0"

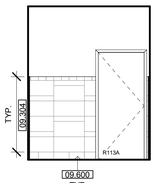

2 R113 - RESTROOM - A
1/4" = 1'-0"

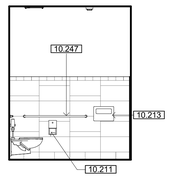

3 R113 - RESTROOM - B
1/4" = 1'-0"

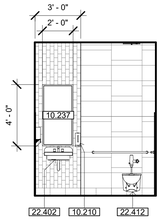

4 R113 - RESTROOM - C
1/4" = 1'-0"

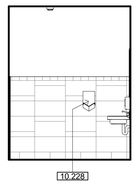

5 R113 - RESTROOM - D
1/4" = 1'-0"

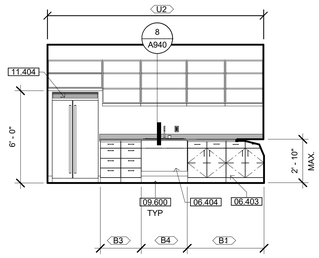

6 R118 - CAB STORAGE - NORTH
1/4" = 1'-0"

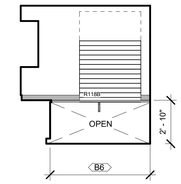

7 R118 - CAB STORAGE - EAST
1/4" = 1'-0"

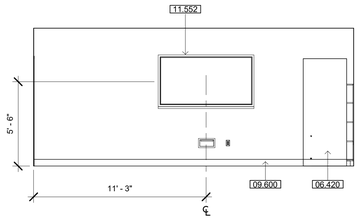

8 R119 - TELEVISION ROOM - NORTH
1/4" = 1'-0"

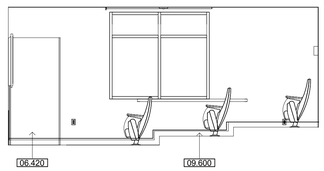

9 R119 - TELEVISION ROOM - EAST
1/4" = 1'-0"

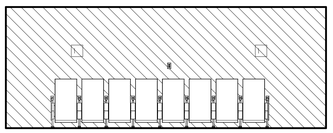

10 R119 - TELEVISION ROOM - SOUTH
1/4" = 1'-0"

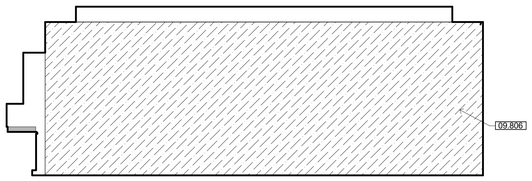

11 R122 - ACTIVITY AREA - NORTH
1/4" = 1'-0"

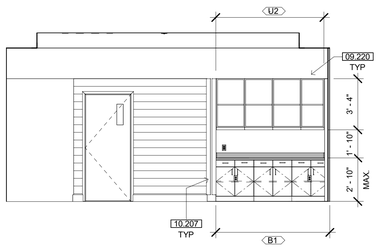

12 R122 - ACTIVITY AREA - WEST
1/4" = 1'-0"

KEYNOTES

06.403	BASE CABINET
06.404	ACCESSIBLE BASE CABINET
06.420	BUILT-IN DIAGONAL CORNER CABINET FOR A/V COMPONENT
09.220	GYPSUM BOARD SOFFIT
09.304	TILE WAINSCOT-SEE FINISH SCHEDULE
09.600	BASE-SEE FINISH SCHEDULE
09.705	FRP PANEL-SEE FINISH SCHEDULE
09.806	ACOUSTICAL WALL TILE
10.207	CORNER GUARD - SEE FINISH SCHEDULE
10.210	SOAP DISPENSER
10.211	SURFACE MOUNTED TOILET TISSUE DISPENSER
10.213	SURFACE MOUNTED TOILET SEAT COVER DISPENSER
10.228	HAND DRYER
10.237	24"W X 48"H MIRROR
10.247	GRAB BARS, 48" AT SIDE & 42" AT BACK - SEE DETAIL 4/A960
11.203	COMBINATION UTILITY SHELF WITH MOP AND BROOM HOLDER
11.404	REFRIGERATOR/FREEZER C.F.C.I. CONTRACTOR TO PROVIDE POWER/WATER CONNECTIONS TO UNIT. UNIT TO COMPLY WITH CBC 11B-804.6.6
11.552	WALL MOUNTED TELEVISION, C.F.C.I - SEE DETAIL 17/A960
22.402	SINK - SEE PLUMBING DRAWINGS
22.412	ACCESSIBLE WALL HUNG TOILET
22.418	JANITOR SINK-SEE PLUMBING DRAWINGS

INTERIOR ELEV. GEN. NOTES

A. GENERAL CONTRACTOR TO PROVIDE STRUCTURAL SUPPORT, BACKING AND/OR METAL REINFORCEMENT IN STUD WALLS AT ALL CASEWORK, CABINETS, SHELVING, EQUIPMENT ETC. REFER TO G212 & G213 FOR TYPICAL MOUNTING HEIGHTS AND ARRANGEMENTS OF COMMON SPECIALTY ITEMS INCLUDING SHOWERS AND TOILET ROOMS.

B. SEE SHEET 18/A960 FOR TYP. ACCESSORY MOUNTING

C. SEE MECHANICAL, ELECTRICAL & LOW VOLTAGE DRAWINGS FOR EXTENT AND LOCATION OF ADDITIONAL WALL MOUNTED ITEMS SUCH AS CARD READERS, THERMOSTATS, SWITCHES, OUTLETS, CLOCKS, NURSECALL LIGHTS, FIRE ALARM, ETC. LOCATE ALL OUTLETS, SWITCHES, EQUIP., RECEPTACLE BOXES & OTHER SIMILAR RELATED ITEMS FOR OWNER'S FINAL APPROVAL PRIOR TO CONDUIT/PIPE INSTALLATION.

D. CONTRACTOR TO COORDINATE LOCATION OF CONTRACTOR OR OWNER FURNISHED ITEMS.

E. REFER TO FINISH SCHEDULE AND SPECIFICATIONS FOR SPECIFIC FINISH MATERIAL.

F. ALL VERTICAL DIMENSIONS ARE FROM FINISHED FLOOR, U.N.O.

G. ALL RECESSED SPECIALTIES SHOWN ON ELEVATIONS THAT ARE LOCATED IN FIRE RATED WALLS ARE TO BE 5-SIDED WITH 5/8" TYPE 'X' GYPBOARD SIMILAR TO 13/A901

H. WHERE OUTLETS, MONITORS AND LIGHT SWITCHES ARE NOT DIMENSIONED AT A GIVEN ELEVATION, CAN BE ASSUMED TO BE SIMILAR TO THE ONE ON THE ELEVATION THAT IS DIMENSIONED. WHERE OUTLETS ARE DIMENSIONED ON AN ELEVATION THE TYPICAL FRAMING MUST BE ALTERED AND/OR STUDS HEADED OFF TO ACCOMMODATE DIMENSIONED LOCATIONS AND SHOWN.

I. ALL WALL SURFACES IN NEED OF REPAIR SHALL BE FILLED, SPACKLED AND TEXTURED TO MATCH THE EXISTING WALLS. FINISH AS SPECIFIED.

BUILT-IN CASEWORK NOTES

AA. PROVIDE BACKSPLASH AND ENDSPLASH OF MATERIAL MATCHING COUNTERTOP ON ALL COUNTERTOPS U.O.N. BACKSPLASH TO RETURN AT CABINET ENDS - SEE DETAIL OR NOTES FOR HEIGHTS.

BB. PROVIDE PLAM END PANEL WHERE COUNTERTOP ENDS WITHOUT BASE UNIT OR SUPPORTING WALL.

CC. PROVIDE "FLOATING WALL-MOUNT BRACKET" @ 32" O.C. AT ANY OPEN COUNTER WITH SPAN GREATER THAN 3'-0" WIDTH. SEE 10/A940. CONTRACTOR TO VERFIY COORDINATION OF TRADES FOR IN-WALL INSTALLATION

DD. PROVIDE (1) ADJUSTABLE SHELF AT BASE CABINETS EXCEPT SINK BASE, U.O.N.

EE. FIELD VERIFY ALL DIMENSIONS AND EQUIPMENT SIZES PRIOR TO CASEWORK FABRICATION.

FF. PROVIDE 3" DIAMETER GROMMETS AT BACK OF COUNTERTOP AS DIRECTED BY OWNER.

GG. ALL SHELVES ARE ADJUSTABLE, U.O.N.

INTERIOR ELEV. LEGEND

###X	CASEWORK TAG - SEE SHEET A940
X	SIGNAGE TAG - SEE SHEET A965
B##X	DOOR TAG - SEE SCHEDULE, SHEET A710
X	WINDOW TAG - SEE SCHEDULE, SHEET A720
	GYPSUM BOARD - PAINT
	WALL TILE WT-1/2 OVER CEMENTITIOUS BACKER BOARD
	WALL TILE WT-3 OVER CEMENTITIOUS BACKER BOARD
	FIBER REINFORCED PLASTIC (FRP) WALL PROTECTION OVER GYPSUM BOARD
	WALL PROTECTION OVER GYPSUM BOARD
	ACOUSTIC WALL PANELS AWP-2 OVER GYPSUM BOARD
	RECLAIMED REDWOOD PLANKS OVER GYPSUM BOARD
	ACOUSTIC WALL TILE AWT-4 OVER GYPSUM BOARD

IDENTIFICATION STAMP
DIV. OF THE STATE ARCHITECT
APP: 02-118630 INC:
REVIEWED FOR
SS ☐ FLS ☐ ACS ☑
DATE: 04/13/2021

OFFICE OF THE STATE FIRE MARSHAL
APPROVED FIRE AND PANIC ONLY
Approval of this plan does not authorize or approve any omission or deviation from applicable regulations. Final approval is subject to field inspection. One set of approved plans shall be available on the project site at all times.
PERMIT NO. 2020-2332-CP
REVIEWED BY: LEO CATAYLO, OSFM
DATE: 4 / /2021

DGS GENERAL SERVICES
Department of General Services
State of California
Real Estate Services Division
Project Management & Development Branch
707 Third Street, Suite 4-105
West Sacramento, California 95605

NICHOLS MELBURG & ROSSETTO
ARCHITECTS + ENGINEERS
300 Knollcrest Drive
Redding, CA. 96002
(530) 222-3300 (530) 222-3538 FAX
http://www.nmrdesign.com

Copyright © 2020
All ideas, designs, arrangements and plans indicated or represented by this drawing are owned by, and the property of, NICHOLS, MELBURG and ROSSETTO and were created, evolved and developed for use on, and in conjunction with, the specified project. None of such ideas, designs, arrangements or plans shall be used by, or disclosed to any person, firm or corporation for any purpose whatsoever without the written permission of NICHOLS, MELBURG and ROSSETTO

LICENSE STAMPS

LICENSED ARCHITECT KYLE MATTHEW BROWN C-31504 REN. 10/31/21 STATE OF CALIFORNIA

CONSULTANT

DRAWING STATUS
CONSTRUCTION DOCUMENTS

ISSUE

No.	Date	Description
1	10/20/2020	INITIAL PLAN REVIEW
2	01/22/2021	AGENCY RESUBMITTAL
3	03/22/2021	AGENCY RESUBMITTAL

If drawing is not 30" x 42" it is a reduced print

PROJECT
RESIDENTIAL CENTER, UKIAH: REPLACEMENT OF EXISTING RESIDENTIAL CENTER
440 EAST HILL ROAD
WILLITS, CALIFORNIA 95490
MENDOCINO COUNTY
CALIFORNIA CONSERVATION CORP

Supervisor	Designed	Drawn
KJM	DMH	MO

DSA Application No.
02-118630

SHEET TITLE
RECREATION BLDG. INTERIOR ELEVATION

DGS Project Number: 000000000001826
NMR Project Number: 18-6456

Reference North
Sheet Scale: As indicated
Sheet Number: A501R

ISSUE DATE
July 9, 2021

Plot Date: 3/19/2021 1:27:06 PM
File Name: BIM 360://CCC Willits Residential Center/A_CCC-WRC-REC.rvt

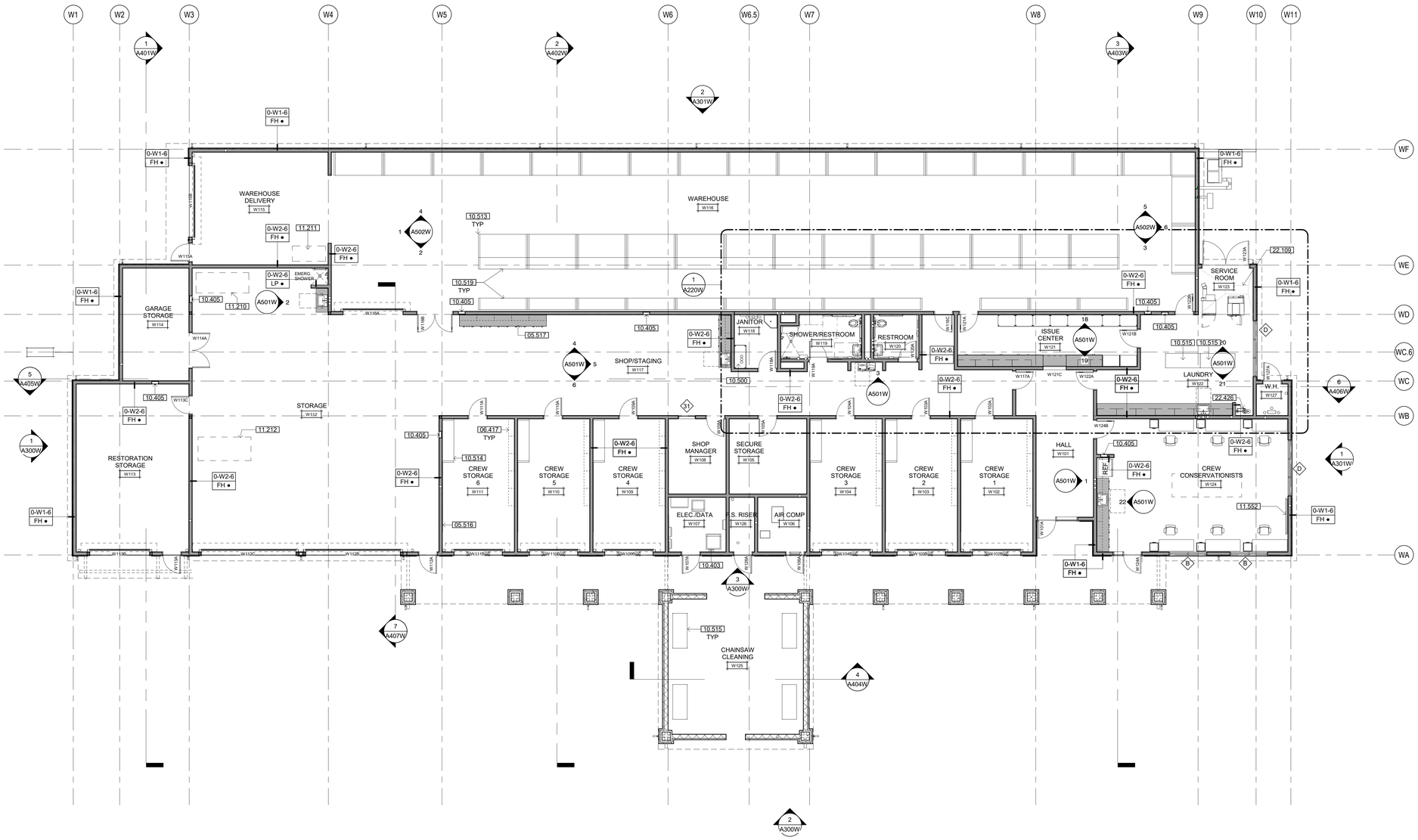

WAREHOUSE FLOOR PLAN

NORTH

SCALE: 1/8" = 1'-0"

KEYNOTES

05.516	DIAMOND PLATE SLATWALL SYSTEM
05.517	1/4" STEEL COUNTERTOP
06.417	5-TIER PLYWOOD STORAGE CABINET
10.403	SURFACE-MOUNTED FIRE EXTINGUISHER CABINET PER DETAIL 3A/A960
10.405	RECESSED FIRE EXTINGUISHER CABINET PER DETAIL 2A/A960
10.500	METAL STORAGE SHELVING UNIT
10.513	4-TIER STEEL FREESTANDING SHELVING UNIT, 102X96X44" 2000 LBS. PER SHELF CAPACITY
10.514	4-TIER STEEL FREESTANDING SHELVING UNIT, 84X84X24" 2000 LBS. PER SHELF CAPACITY
10.515	STAINLESS STEEL WORK TABLE 42X96X34"
10.519	4-TIER STEEL FREESTANDING SHELVING UNIT, 102X96X24" 2000 LBS. PER SHELF CAPACITY
11.210	ELECTRIC FORKLIFT AND CHARGING STATION, CFCI, CROWN SC 5200 SERIES: MODEL 522K-35, CHARGER: V-HFM3 SERIES, MODEL FS3 WITH ALL ACCESSORIES AND MOUNTING HARDWARE FOR A COMPLETE INSTALLATION, OR ACCEPTED EQUAL.
11.211	ELECTRIC SCISSOR LIFT AND CHARGING STATION, CFCI, JLG ALL ELECTRIC SERIES, MODEL AE1932 WITH COILED CONTROL BOX CABLE, QUIK ACCESS PLATFORM, LCD CONTROL BOX, AND DUAL LED FLASHING AMBER BEACON, OR ACCEPTED EQUAL
11.212	ELECTRIC CART AND CHARGING STATION, CFCI CUSHMAN HAULER 800X - ELITE WITH REAR HITCH RECEIVER, LIFTED SUSPENSION. COLOR: FOREST GREEN, GRAB HANDLE KIT, HEADREST KIT, 20X8-10 TURF TIRE AND WHEEL ASSEMBLY, JENSEN SOUND SYSTEM, ELECTRIC DUMP ASSEMBLY, LED HEADLIGHT KIT, SAFETY LAMPS, SIDE MIRRORS, TURN SIGNALS, OR ACCEPTED EQUAL.
11.552	WALL MOUNTED TELEVISION, C.F.C.I - SEE DETAIL 17/A960
22.109	FLOOR TROUGH - SEE LAUNDRY DRAWING. SLOPE FLOOR 1/8".12" TO DRAIN
22.426	EMERGENCY EYEWASH - SEE PLUMBING DRAWINGS

GENERAL NOTES

A. FOR WALL ASSEMBLIES REFER TO GENERAL ASSEMBLIES, SHEET G121.
B. UNLESS OTHERWISE INDICATED, INTERIOR STUD FRAMED WALLS SHALL BE TYPE 0-2-6.
C. UNLESS OTHERWISE INDICATED, EXTERIOR STUD FRAMED WALLS SHALL BE TYPE 0-1-6.
D. SEE ENLARGED PLANS FOR WALL TYPES NOT INDICATED ON THIS PLAN.
E. REFER TO DETAIL 4/A961 FOR WALL INTERSECTION PRIORITIES.
F. SEE DOOR SCHEDULE, SHEET A710, FOR ADDITIONAL DOOR INFORMATION AND DIMENSIONS. ALL DOOR RATINGS SHALL MATCH OR EXCEED THE RATING OF THE WALL OR PARTITION IN WHICH THEY ARE INSTALLED.
G. SEE WINDOW SCHEDULE, SHEET A720, FOR ADDITIONAL WINDOW INFORMATION AND DIMENSIONS. ALL WINDOW RATINGS SHALL MATCH OR EXCEED THE RATING OF THE WALL OR PARTITION IN WHICH THEY ARE INSTALLED.
H. REFER TO STRUCTURAL NOTES SHEET S011 AND STRUCTURAL DETAIL SHEET S561 FOR TYPICAL WALL FRAMING DETAILS AND REQUIREMENTS
I. REFER TO SHEET A961 FOR HEAD OF WALL ASSEMBLIES
J. REFER TO FINISH SCHEDULE & INTERIOR ELEVATIONS FOR GYPSUM BOARD TYPE & LOCATIONS
K. ALL DIMENSIONS SHALL TAKE PRECEDENCE OVER SCALE SHOWN ON PLANS, SECTIONS AND DETAILS. DIMENSIONS MISSING FROM THE PLANS, OR NEEDED FOR EXECUTION OF WORK, SHALL BE PROVIDED OR CLARIFIED BY THE ARCHITECT BEFORE THE WORK IS INSTALLED. ERRORS RESULTING IN FAILURE TO COMPLY WITH THIS PROCEDURE SHALL BE CORRECTED BY, AND AT THE SOLE EXPENSE OF, THE CONTRACTOR. DIMENSIONS ARE TO FACE OF STUDS OR SLAB UNLESS NOTED OTHERWISE ON DRAWINGS. DO NOT SCALE DRAWINGS. DIMENSIONS NOTED AS "CLEAR" (CLR) ARE TAKEN TO THE FACE OF FINISH MATERIALS. THE CONTRACTOR SHALL VERIFY DIMENSIONS OF PREFABRICATED AND MANUFACTURED ITEMS AND COORDINATE ROUGH OPENINGS ACCORDINGLY.
   1. ALL DIMENSIONS ARE TO FACE OF STUD, CENTERLINE OF COLUMNS, FACE OF CONCRETE
   2. FINISH FLOOR DIMENSIONS ARE TO TOP OF CONCRETE OR OTHER HARD SURFACE
   3. CEILING HEIGHT DIMENSIONS ARE TO FINISH SURFACES

FLOOR PLAN LEGEND

- DOOR WITH TAG - SEE SCHEDULE, SHEET A710
- WINDOW WITH TAG - SEE SCHEDULE, SHEET A720
- COUNTERTOP OVER CASEWORK - DASHED LINE INDICATES WALL MOUNTED CASEWORK ABOVE - SEE INTERIOR ELEVATIONS
- RECESSED FIRE EXTINGUISHER & CABINET
- SINK / LAVATORY - SEE PLUMBING DRAWINGS
- TOILET - SEE PLUMBING DRAWINGS
- URINAL - SEE PLUMBING DRAWINGS
- DRINKING FOUNTAIN - SEE PLUMBING DRAWINGS

WALL TYPES LEGEND

SEE SHEET G121 FOR ASSEMBLY TYPES

EXTERIOR

- 2 x 6 WOOD STUD WALL - NON RATED — 0-W1-6 * ● #
- 2 x 12 WOOD STUD WALL - NON RATED — 0-W1-12 * ● #

INTERIOR

- 2 x 4 WOOD STUD WALL - NON RATED — 0-W2-4 * ● #
- 2 x 6 WOOD STUD WALL - NON RATED — 0-W2-6 * ● #
- 2 x 8 WOOD STUD WALL - NON RATED — 0-W2-8 * ● #
- 2 x 12 WOOD STUD WALL - NON RATED — 0-W2-12 * ● #
- 2 x 4 WOOD STUD WALL - ACOUSTIC — 0-W5-4 * ● #
- 2 x 6 WOOD STUD WALL - ACOUSTIC — 0-W5-6 * ● #
- 2 X 4 WOOD STUD WALL - 1-HR FIRE PARTITION W/ PROTECTED OPENINGS — 1-W3-4 * ● #
- 2 X 6 WOOD STUD WALL - 1-HR FIRE PARTITION W/ PROTECTED OPENINGS — 1-W3-6 * ● #

WALL TYPE NOTES

PARTITION SYMBOL

B-B-# * - #
- FIRE-RESISTIVE RATING
- ASSEMBLY DETAIL NUMBER
- NOMINAL STUD SIZE
- # = SPECIAL CONDITIONS
- * = PARTITION HEIGHT

IDENTIFICATION STAMP
DIV. OF THE STATE ARCHITECT
APP: 02-118630 INC:
REVIEWED FOR
SS ☐ FLS ☐ ACS ☑
DATE: 04/13/2021

OFFICE OF THE STATE FIRE MARSHAL
APPROVED FIRE AND PANIC ONLY
Approval of this plan does not authorize or approve any omission or deviation from applicable regulations. Final approval is subject to field inspection. One set of approved plans shall be available on the project site at all times.
PERMIT NO. 20-N-2332-CP
REVIEWED BY: LEO CATAYLO, OSFM
DATE: 4 / /2021

GENERAL SERVICES
Department of General Services
State of California
Real Estate Services Division
Project Management & Development Branch
707 Third Street, Suite 4-105
West Sacramento, California 95605

NICHOLS MELBURG & ROSSETTO ARCHITECTS + ENGINEERS
300 Knollcrest Drive
Redding, CA. 96002
(530) 222-3300 (530) 222-3538 FAX
http://www.nmrdesign.com

Copyright © 2020
All ideas, designs, arrangements and plans indicated or represented by this drawing are owned by, and the property of, NICHOLS, MELBURG and ROSSETTO and were created, evolved and developed for use on, and in conjunction with, the specified project. None of such ideas, designs, arrangements or plans shall be used by, or disclosed to any person, firm or corporation for any purpose whatsoever without the written permission of NICHOLS, MELBURG and ROSSETTO

LICENSE STAMPS

LICENSED ARCHITECT KYLE MATTHEW ROSSETTO C-21504 REN. 10/31/21 STATE OF CALIFORNIA

CONSULTANT

DRAWING STATUS
CONSTRUCTION DOCUMENTS

ISSUE

No.	Date	Description
1	10/20/2020	INITIAL PLAN REVIEW
2	01/22/2021	AGENCY RESUBMITTAL
3	03/22/2021	AGENCY RESUBMITTAL

If drawing is not 30" x 42" it is a reduced print

PROJECT
RESIDENTIAL CENTER, UKIAH: REPLACEMENT OF EXISTING RESIDENTIAL CENTER
440 EAST HILL ROAD
WILLITS, CALIFORNIA 95490
MENDOCINO COUNTY
CALIFORNIA CONSERVATION CORP

Supervisor	Designed	Drawn
KJM	DMH	CD

DSA Application No.
02-118630

SHEET TITLE
WAREHOUSE BLDG. FLOOR PLAN

DGS Project Number: 0000000000001826
NMR Project Number: 18-6456

Reference North: NORTH
Sheet Scale: As indicated
Sheet Number: A201W

ISSUE DATE
July 9, 2021

Plot Date: 3/19/2021 9:39:29 AM
File Name: S:\NM 3900\CCC-CV\Willits Residential Center\A_CCC-WRC-WAREHOUSE.rvt

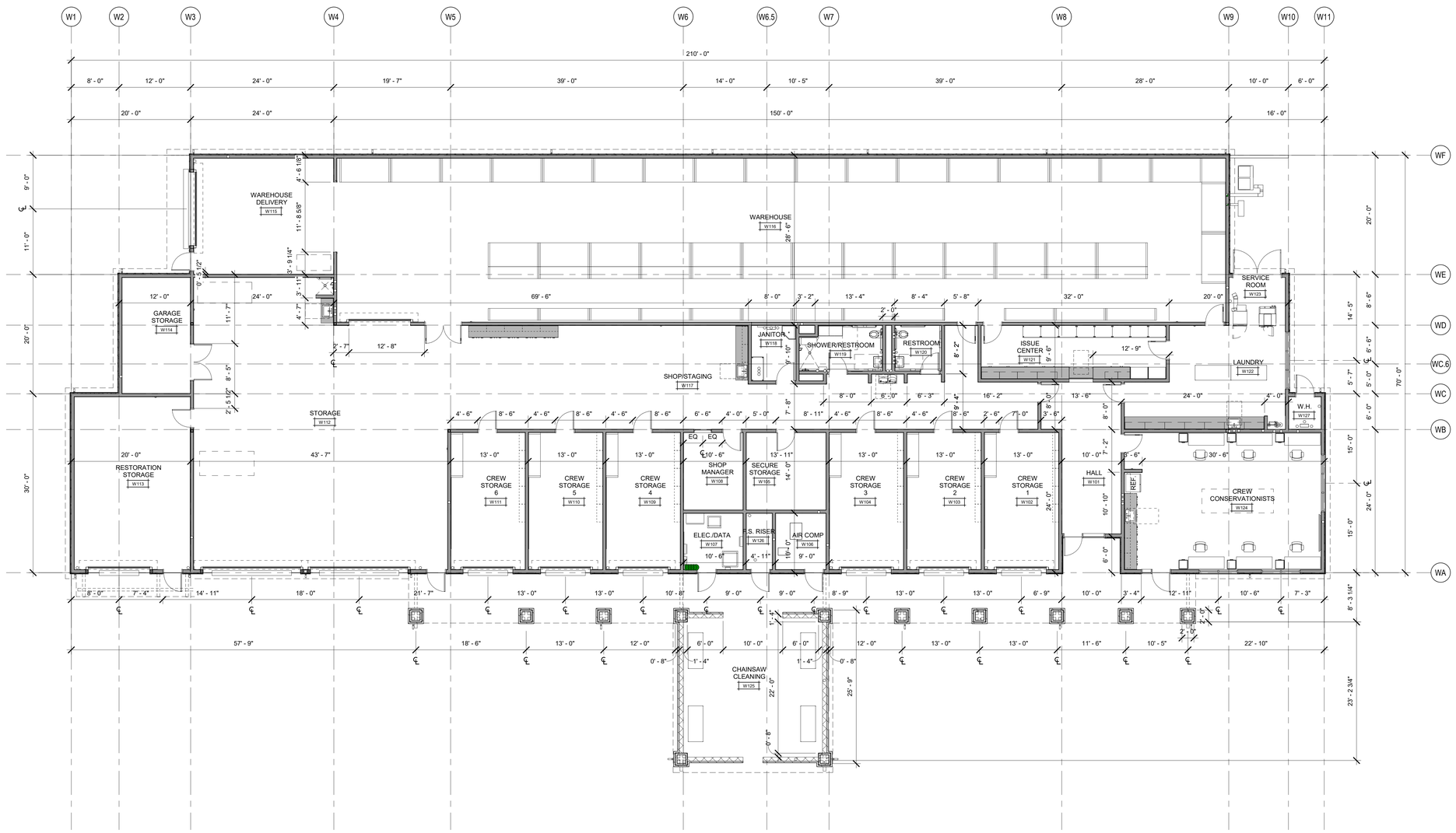

WAREHOUSE DIMENSION PLAN

NORTH

SCALE: 1/8" = 1'-0"

WALL TYPES LEGEND

SEE SHEET G121 FOR ASSEMBLY TYPES

EXTERIOR

2 x 6 WOOD STUD WALL - NON RATED	0-W1-6 * ◆ #
2 x 12 WOOD STUD WALL - NON RATED	0-W1-12 * ◆ #

INTERIOR

2 x 4 WOOD STUD WALL - NON RATED	0-W2-4 * ◆ #
2 x 6 WOOD STUD WALL - NON RATED	0-W2-6 * ◆ #
2 x 8 WOOD STUD WALL - NON RATED	0-W2-8 * ◆ #
2 x 12 WOOD STUD WALL - NON RATED	0-W2-12 * ◆ #
2 x 4 WOOD STUD WALL - ACOUSTIC	0-W5-4 * ◆ #
2 x 6 WOOD STUD WALL - ACOUSTIC	0-W5-6 * ◆ #
2 X 4 WOOD STUD WALL - 1-HR FIRE PARTITION W/ PROTECTED OPENINGS	1-W3-4 * ◆ #
2 X 6 WOOD STUD WALL - 1-HR FIRE PARTITION W/ PROTECTED OPENINGS	1-W3-6 * ◆ #

WALL TYPE NOTES

PARTITION SYMBOL

- FIRE-RESISTIVE RATING
- ASSEMBLY DETAIL NUMBER
- NOMINAL STUD SIZE

(# ◆ #) / (* ◆ #)

- # = SPECIAL CONDITIONS
- * = PARTITION HEIGHT

IDENTIFICATION STAMP
DIV. OF THE STATE ARCHITECT
APP: 02-118630 INC:
REVIEWED FOR
SS ☐ FLS ☐ ACS ☑
DATE: 04/13/2021

OFFICE OF THE STATE FIRE MARSHAL
APPROVED FIRE AND PANIC ONLY
Approval of this plan does not authorize or approve any omission or deviation from applicable regulations. Final approval is subject to field inspection. One set of approved plans shall be available on the project site at all times.
PERMIT NO. 20-N-2332-CP
REVIEWED BY: LEO CATAYLO, OSFM
DATE: 4 / /2021

GENERAL SERVICES
Department of General Services
State of California
Real Estate Services Division
Project Management & Development Branch
707 Third Street, Suite 4-105
West Sacramento, California 95605

NICHOLS MELBURG & ROSSETTO
ARCHITECTS + ENGINEERS
300 Knollcrest Drive
Redding, CA. 96002
(530) 222-3300 (530) 222-3538 FAX
http://www.nmrdesign.com

Copyright © 2020
All ideas, designs, arrangements and plans indicated or represented by this drawing are owned by, and the property of, NICHOLS, MELBURG and ROSSETTO and were created, evolved and developed for use on, and in conjunction with, the specified project. None of such ideas, designs, arrangements or plans shall be used by, or disclosed to any person, firm or corporation for any purpose whatsoever without the written permission of NICHOLS, MELBURG and ROSSETTO

LICENSE STAMPS

LICENSED ARCHITECT KYLE MATTHEW ROSSETTO C-27504 REN. 10/31/21 STATE OF CALIFORNIA

CONSULTANT

DRAWING STATUS
CONSTRUCTION DOCUMENTS

ISSUE

No.	Date	Description
1	10/20/2020	INITIAL PLAN REVIEW
2	01/22/2021	AGENCY RESUBMITTAL
3	03/22/2021	AGENCY RESUBMITTAL

If drawing is not 30" x 42" it is a reduced print

PROJECT
RESIDENTIAL CENTER, UKIAH: REPLACEMENT OF EXISTING RESIDENTIAL CENTER
440 EAST HILL ROAD
WILLITS, CALIFORNIA 95490
MENDOCINO COUNTY
CALIFORNIA CONSERVATION CORP

Supervisor	Designed	Drawn
KJM	DMH	CD

DSA Application No.
02-118630

SHEET TITLE
WAREHOUSE BLDG. DIMENSION PLAN

DGS Project Number: 000000000001826
NMR Project Number: 18-6456

Reference North: NORTH
Sheet Scale: As indicated
Sheet Number: A211W

ISSUE DATE
July 9, 2021

Plot Date: 2/10/2021 1:09:24 AM
File Name: BIM 360://CCC-Willits Residential Center/A_CCC-WRC-WAREHOUSE.rvt

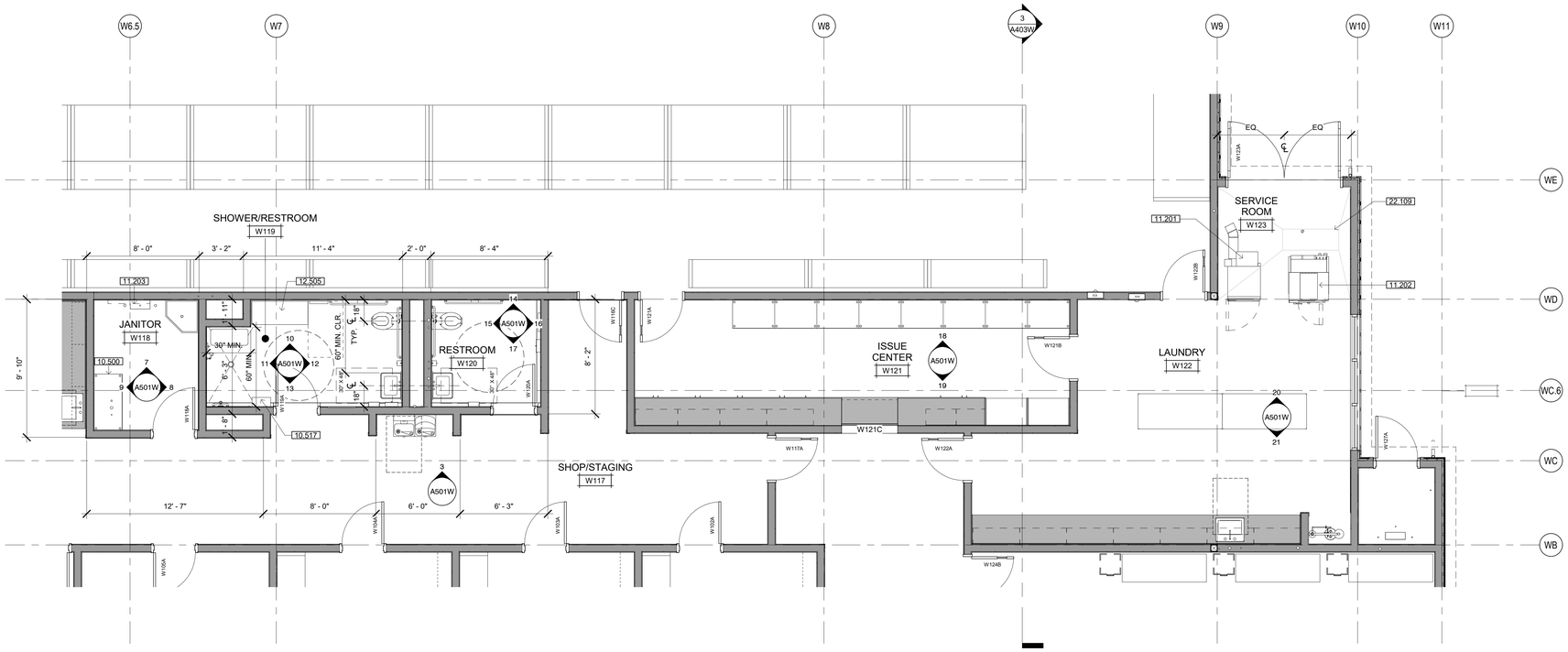

NORTH

ENLARGED PLAN

SCALE: 1/4" = 1'-0"

KEYNOTES

10.500	METAL STORAGE SHELVING UNIT
10.517	STAINLESS STEEL SHELF, 4" MAX. PROJECTION
11.201	COMMERCIAL WASHER
11.202	COMMERCIAL DRYER
11.203	COMBINATION UTILITY SHELF WITH MOP AND BROOM HOLDER
12.505	LOCKER ROOM BENCH, 20" X 48"
22.109	FLOOR TROUGH - SEE LAUNDRY DRAWING. SLOPE FLOOR 1/8":12" TO DRAIN

WALL TYPES LEGEND

SEE SHEET G121 FOR ASSEMBLY TYPES

EXTERIOR

2 x 6 WOOD STUD WALL - NON RATED	0-W1-6 * ◆ #
2 x 12 WOOD STUD WALL - NON RATED	0-W1-12 * ◆ #

INTERIOR

2 x 4 WOOD STUD WALL - NON RATED	0-W2-4 * ◆ #
2 x 6 WOOD STUD WALL - NON RATED	0-W2-6 * ◆ #
2 x 8 WOOD STUD WALL - NON RATED	0-W2-8 * ◆ #
2 x 12 WOOD STUD WALL - NON RATED	0-W2-12 * ◆ #
2 x 4 WOOD STUD WALL - ACOUSTIC	0-W5-4 * ◆ #
2 x 6 WOOD STUD WALL - ACOUSTIC	0-W5-6 * ◆ #
2 X 4 WOOD STUD WALL - 1-HR FIRE PARTITION W/ PROTECTED OPENINGS	1-W3-4 * ◆ #
2 X 6 WOOD STUD WALL - 1-HR FIRE PARTITION W/ PROTECTED OPENINGS	1-W3-6 * ◆ #

WALL TYPE NOTES

PARTITION SYMBOL

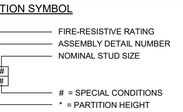

IDENTIFICATION STAMP
DIV. OF THE STATE ARCHITECT
APP: 02-118630 INC:
REVIEWED FOR
SS ☐ FLS ☐ ACS ☑
DATE: 04/13/2021

OFFICE OF THE STATE FIRE MARSHAL
APPROVED FIRE AND PANIC ONLY
Approval of this plan does not authorize or approve any omission or deviation from applicable regulations. Final approval is subject to field inspection. One set of approved plans shall be available on the project site at all times.
PERMIT NO. 20-N-2332-CP
REVIEWED BY: LEO CATAYLO, OSFM
DATE: 4 / /2021

DGS GENERAL SERVICES
Department of General Services
State of California
Real Estate Services Division
Project Management & Development Branch
707 Third Street, Suite 4-105
West Sacramento, California 95605

NICHOLS MELBURG & ROSSETTO
ARCHITECTS + ENGINEERS
300 Knollcrest Drive
Redding, CA. 960002
(530) 222-3300 (530) 222-3538 FAX
http://www.nmrdesign.com

Copyright © 2020
All ideas, designs, arrangements and plans indicated or represented by this drawing are owned by, and the property of, NICHOLS, MELBURG and ROSSETTO and were created, evolved and developed for use on, and in conjunction with, the specified project. None of such ideas, designs, arrangements or plans shall be used by, or disclosed to any person, firm or corporation for any purpose whatsoever without the written permission of NICHOLS, MELBURG and ROSSETTO

LICENSE STAMPS

LICENSED ARCHITECT KYLE MATTHEW ROSSETTO C-27504 RENEWAL 10/31/21 STATE OF CALIFORNIA

CONSULTANT

DRAWING STATUS
CONSTRUCTION DOCUMENTS

ISSUE

No.	Date	Description
1	10/20/2020	INITIAL PLAN REVIEW
2	01/22/2021	AGENCY RESUBMITTAL
3	03/22/2021	AGENCY RESUBMITTAL

If drawing is not 30" x 42" it is a reduced print

PROJECT
RESIDENTIAL CENTER, UKIAH: REPLACEMENT OF EXISTING RESIDENTIAL CENTER
440 EAST HILL ROAD
WILLITS, CALIFORNIA 95490
MENDOCINO COUNTY
CALIFORNIA CONSERVATION CORP

Supervisor	Designed	Drawn
KJM	DMH	CD

DSA Application No.
02-118630

SHEET TITLE
WAREHOUSE BLDG ENLARGED FLOOR PLAN

DGS Project Number	NMR Project Number
000000000001826	18-6456

Reference North: NORTH
Sheet Scale: As indicated
Sheet Number: A220W

ISSUE DATE
July 9, 2021

Plot Date: 5/19/2021 9:38:37 AM
File Name: 81M 360 / CCC-Willits Residential Center/A_CCC-WRC-WAREHOUSE.rvt

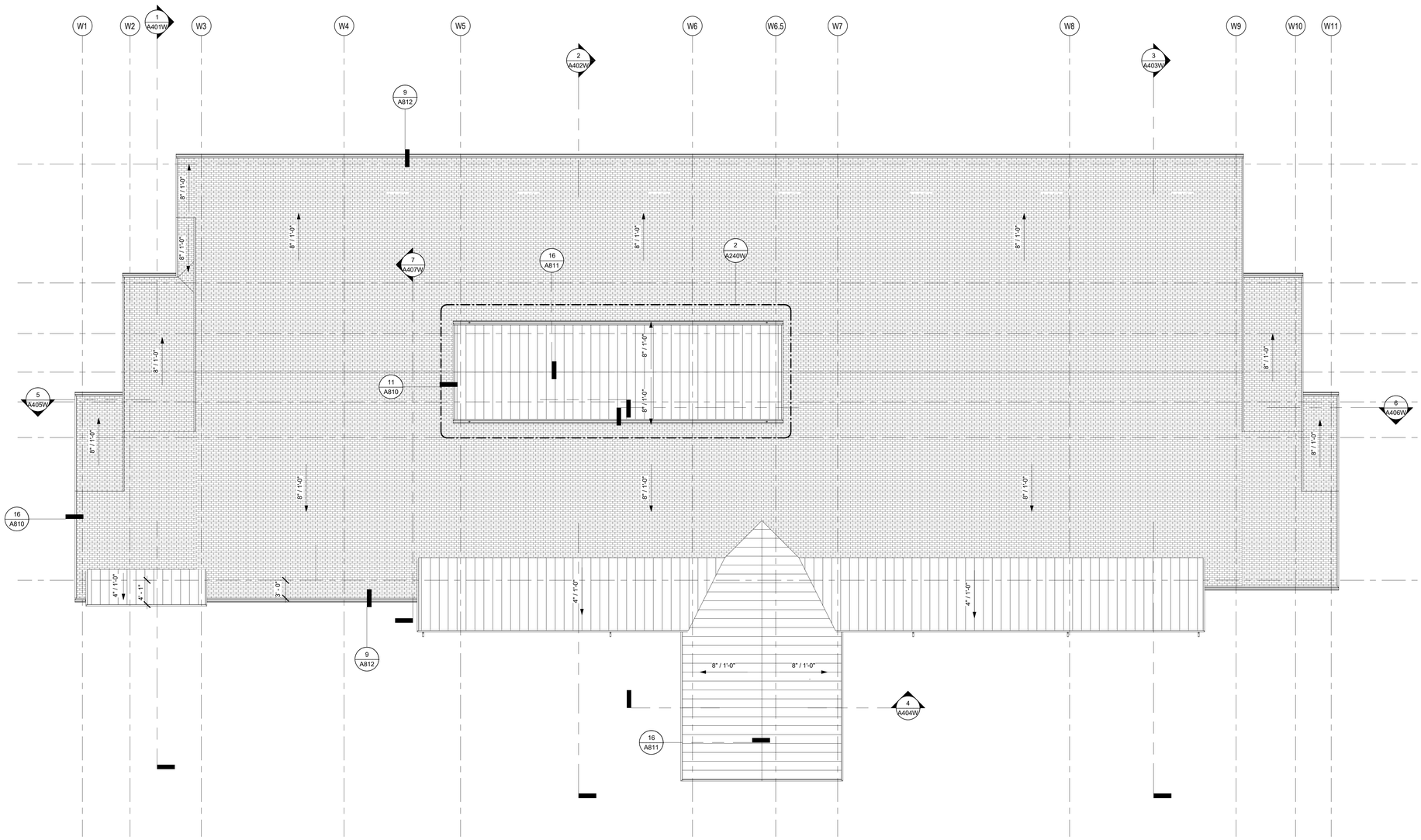

WAREHOUSE ROOF PLAN 1

SCALE: 1/8" = 1'-0"

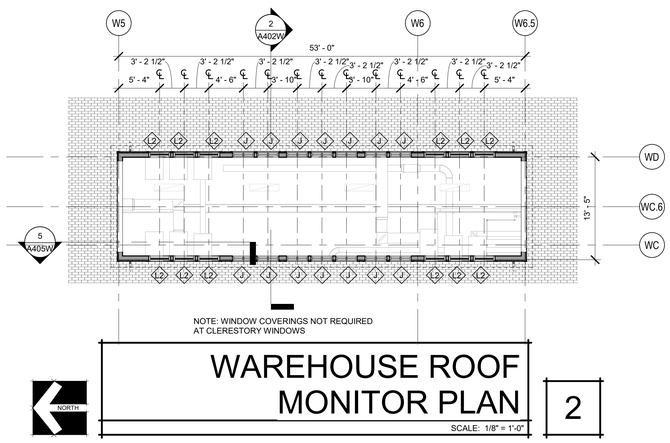

WAREHOUSE ROOF MONITOR PLAN 2

SCALE: 1/8" = 1'-0"

ROOF PLAN NOTES

A. ALL PIPE PENETRATIONS NOT SHOWN. SEE MECHANICAL & PLUMBING DRAWINGS FOR LOCATION INFORMATION, SEE ROOF PIPE PENETRATION DETAIL 5/A810.

B. HVAC CONDENSATE DRAIN PIPES NOT SHOWN. SEE MECHANICAL & PLUMBING DRAWINGS FOR REQUIREMENTS.

ROOF PLAN LEGEND

REFER TO DRAWING G120 FOR TYPICAL ROOF CONSTRUCTION ASSEMBLIES

- ASPHALT SHINGLE ROOFING- SEE SHEET A810
- PREFINISHED METAL ROOFING - SEE SHEET A810
- ROOF DRAIN & OVERFLOW

IDENTIFICATION STAMP
DIV. OF THE STATE ARCHITECT
APP: 02-118630 INC:
REVIEWED FOR
SS ☐ FLS ☐ ACS ☑
DATE: 04/13/2021

OFFICE OF THE STATE FIRE MARSHAL
APPROVED FIRE AND PANIC ONLY
Approval of this plan does not authorize or approve any omission or deviation from applicable regulations. Final approval is subject to field inspection. One set of approved plans shall be available on the project site at all times.
PERMIT NO. 20-N-2332-CP
REVIEWED BY: LEO CATAYLO, OSFM
DATE: 4 / /2021

GENERAL SERVICES
Department of General Services
State of California
Real Estate Services Division
Project Management & Development Branch
707 Third Street, Suite 4-105
West Sacramento, California 95605

NICHOLS MELBURG & ROSSETTO
ARCHITECTS + ENGINEERS
300 Knollcrest Drive
Redding, CA. 96002
(530) 222-3300 (530) 222-3538 FAX
http://www.nmrdesign.com

Copyright © 2020
All ideas, designs, arrangements and plans indicated or represented by this drawing are owned by, and the property of, NICHOLS, MELBURG and ROSSETTO and were created, evolved and developed for use on, and in conjunction with, the specified project. None of such ideas, designs, arrangements or plans shall be used by, or disclosed to any person, firm or corporation for any purpose whatsoever without the written permission of NICHOLS, MELBURG and ROSSETTO

LICENSE STAMPS

LICENSED ARCHITECT KYLE MATTHEW ROSSETTO C-27504 REN 10/31/21 STATE OF CALIFORNIA

CONSULTANT

DRAWING STATUS
CONSTRUCTION DOCUMENTS

ISSUE

No.	Date	Description
1	10/20/2020	INITIAL PLAN REVIEW
2	01/22/2021	AGENCY RESUBMITTAL
3	03/22/2021	AGENCY RESUBMITTAL

If drawing is not 30" x 42" it is a reduced print

PROJECT
RESIDENTIAL CENTER, UKIAH: REPLACEMENT OF EXISTING RESIDENTIAL CENTER
440 EAST HILL ROAD
WILLITS, CALIFORNIA 95490
MENDOCINO COUNTY
CALIFORNIA CONSERVATION CORP

Supervisor	Designed	Drawn
KJM	DMH	CD

DSA Application No.
02-118630

SHEET TITLE
WAREHOUSE BLDG. ROOF PLAN

DGS Project Number: 00000000001826
NMR Project Number: 18-6456

Reference North: NORTH
Sheet Scale: As indicated
Sheet Number: A240W

ISSUE DATE
July 9, 2021

Plot Date: 3/19/2021 9:39:41 AM
File Name: BIM 360://CCC-Willits Residential Center/A_CCC-WRC-WAREHOUSE.rvt

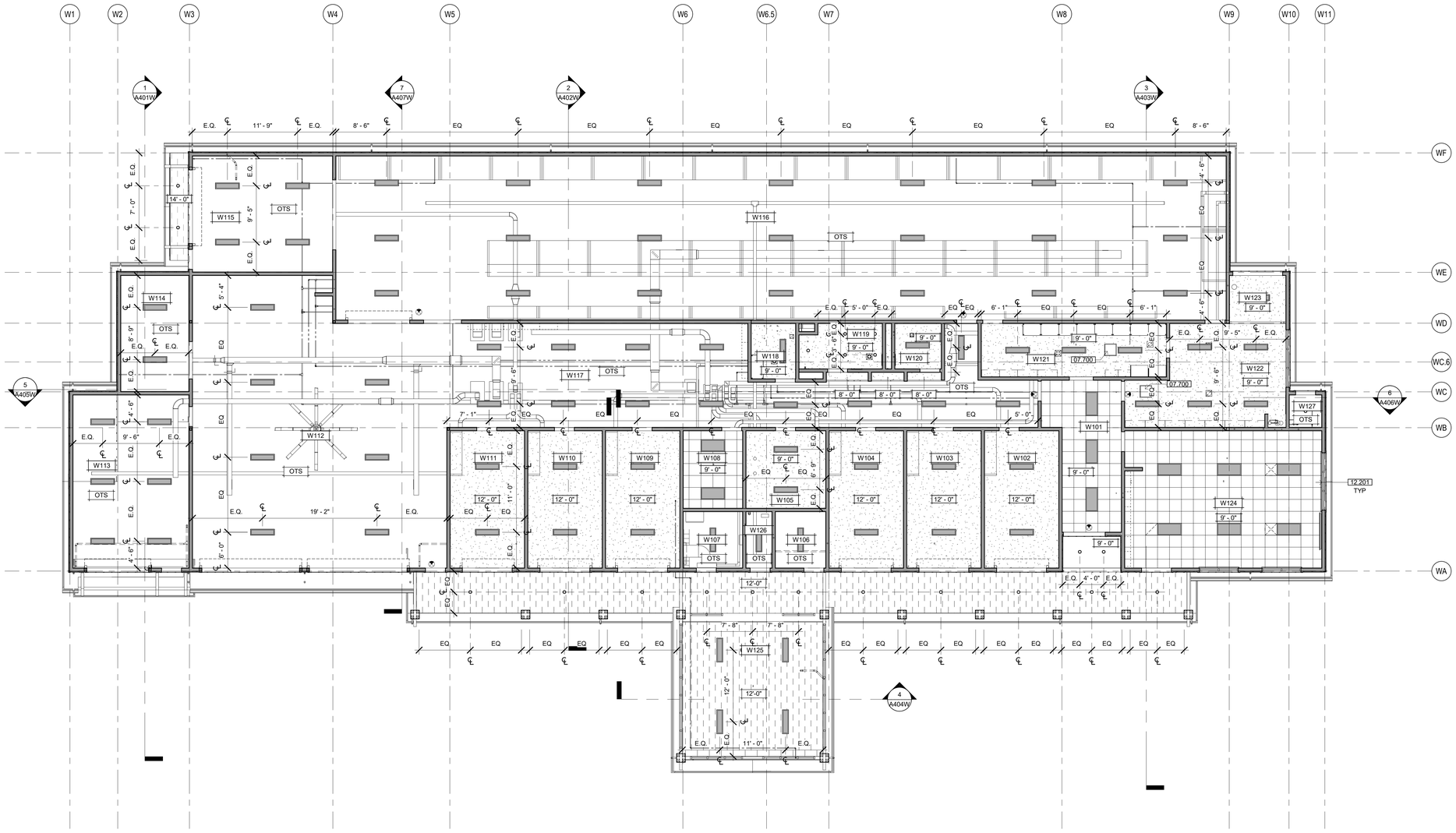

WAREHOUSE REFLECTED CEILING PLAN

NORTH

SCALE: 1/8" = 1'-0"

GENERAL RCP NOTES

A. ACOUSTICAL CEILING HEIGHTS 9'-0" U.O.N.

B. GYPSUM BOARD CEILING IS AT UNDERSIDE OF STRUCTURAL FRAMING U.O.N.

C. REFER TO MECHANICAL, FIRE PROTECTION, ELECTRICAL, SECURITY, AND AUDIOVISUAL DRAWINGS FOR ADDITIONAL CONSTRUCTION FEATURES, SYSTEMS, FIXTURES, AND EQPT. LOCATED IN, ON, AND ABOVE CEILINGS. TO THE EXTENT THAT THESE ITEMS ARE SHOWN ON REFLECTED CEILING PLANS, THEY ARE FOR GENERAL INFORMATION AND LAYOUT PURPOSES ONLY, AND DO NOT NECESSARILY REPRESENT ACTUAL SCOPE OR QUANTITIES REQUIRED FOR THE PROJECT. ALL QUANTITIES TO BE VERIFIED.

D. AT ACOUSTICAL TILE CEILINGS, ALL FIXTURES AND EQUIPMENT SHALL BE CENTERED WITHIN ACOUSTICAL CEILING TILES, IN BOTH DIRECTIONS.

E. SPRINKLER HEAD LOCATIONS SHALL RESULT IN A UNIFORM AND REPETITIVE PATTERN FOR EACH AREA, AND SHALL BE LOCATED SYMMETRICALLY WITH RESPECT TO WALLS, CEILING GRID PATTERNS, AND LIGHT FIXTURES. SPRINKLER HEADS IN ACOUSTICAL TILE CEILINGS SHALL BE LOCATED IN THE CENTERS OF THE CEILING TILES.

F. TYP. EXTERIOR SOFFIT HEIGHT IS AT UNDERSIDE OF STRUCTURAL FRAMING U.O.N.

RCP LEGEND

REFER TO DRAWING G120 FOR TYPICAL CEILING CONSTRUCTION ASSEMBLIES

- 2' x 2' SUSPENDED ACOUSTICAL TILE CEILING SYSTEM — C 3
- 5/8" GYPSUM BOARD CEILING — C 2
- OPEN TO STRUCTURE ABOVE
- EXTERIOR FIBER CEMENT SOFFIT, NON-VENTED
- FIBER CEMENT SOFFIT PANEL
- +X'-X" — INDICATES HEIGHT OF FINISHED CEILING OR SOFFIT (FROM REFERENCE FLOOR ELEVATION)
- 2'x4' LAY-IN LIGHT FIXTURE - SEE ELECTRICAL DRAWINGS
- 6" DIAMETER RECESSED CAN LIGHT FIXTURE - SEE ELECTRICAL DRAWINGS
- 24" CEILING ACCESS DOOR
- SUPPLY AIR DIFFUSERS - SEE MECHANICAL DRAWINGS
- RETURN AIR DIFFUSER - SEE MECHANICAL DRAWINGS
- EXHAUST - SEE MECHANICAL DRAWINGS

KEYNOTES

07.700	ACCESS HATCH - REFER TO 12/A931
12.201	SINGLE ROLL WINDOW SHADE, MANUAL. SEE DETAIL 18/A961

IDENTIFICATION STAMP
DIV. OF THE STATE ARCHITECT
APP: 02-118630 INC:
REVIEWED FOR
SS ☐ FLS ☐ ACS ☑
DATE: 04/13/2021

OFFICE OF THE STATE FIRE MARSHAL
APPROVED FIRE AND PANIC ONLY
Approval of this plan does not authorize or approve any omission or deviation from applicable regulations. Final approval is subject to field inspection. One set of approved plans shall be available on the project site at all times.
PERMIT NO. 20-N-2332-CP
REVIEWED BY: LEO CATAYLO, OSFM
DATE: 4 / /2021

DGS GENERAL SERVICES
Department of General Services
State of California
Real Estate Services Division
Project Management & Development Branch
707 Third Street, Suite 4-105
West Sacramento, California 95605

NICHOLS MELBURG & ROSSETTO ARCHITECTS + ENGINEERS
300 Knollcrest Drive
Redding, CA. 96002
(530) 222-3300 (530) 222-3538 FAX
http://www.nmrdesign.com

Copyright © 2020
All ideas, designs, arrangements and plans indicated or represented by this drawing are owned by, and the property of, NICHOLS, MELBURG and ROSSETTO and were created, evolved and developed for use on, and in conjunction with, the specified project. None of such ideas, designs, arrangements or plans shall be used by, or disclosed to any person, firm or corporation for any purpose whatsoever without the written permission of NICHOLS, MELBURG and ROSSETTO.

LICENSE STAMPS

LICENSED ARCHITECT KYLE MATTHEW ROSSETTO C-27504 REN. 10/31/21 STATE OF CALIFORNIA

CONSULTANT

DRAWING STATUS
CONSTRUCTION DOCUMENTS

ISSUE

No.	Date	Description
1	10/20/2020	INITIAL PLAN REVIEW
2	01/22/2021	AGENCY RESUBMITTAL
3	03/22/2021	AGENCY RESUBMITTAL

If drawing is not 30" x 42" it is a reduced print

PROJECT
RESIDENTIAL CENTER, UKIAH: REPLACEMENT OF EXISTING RESIDENTIAL CENTER
440 EAST HILL ROAD
WILLITS, CALIFORNIA 95490
MENDOCINO COUNTY
CALIFORNIA CONSERVATION CORP

Supervisor	Designed	Drawn
KJM	DMH	CD

DSA Application No.
02-118630

SHEET TITLE
WAREHOUSE BLDG. REFLECTED CEILING PLAN

DGS Project Number	NMR Project Number
000000000001826	18-6456

Reference North: NORTH
Sheet Scale: As indicated
Sheet Number: A251W

ISSUE DATE
July 9, 2021

Plot Date: 3/19/2021 8:39:46 AM
File Name: BIM 360://CCC-Willits Residential Center/A_CCC-WRC-WAREHOUSE.rvt

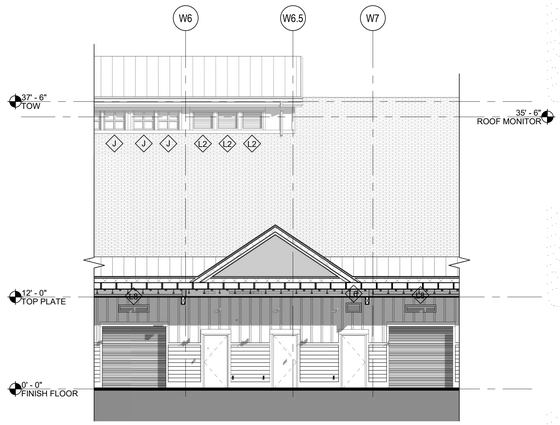

3 WEST ELEVATION (BEHIND)

SCALE: 1/8" = 1'-0"

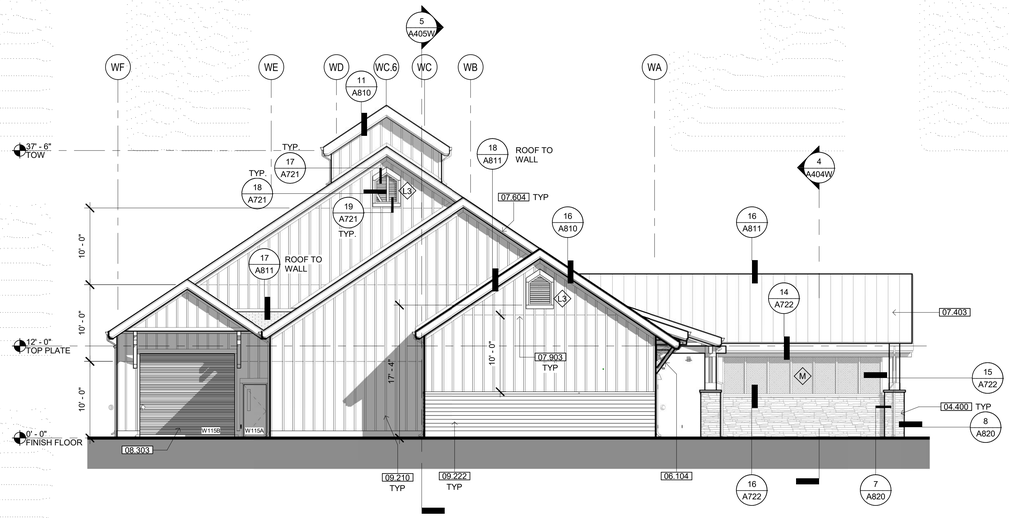

1 NORTH ELEVATION

SCALE: 1/8" = 1'-0"

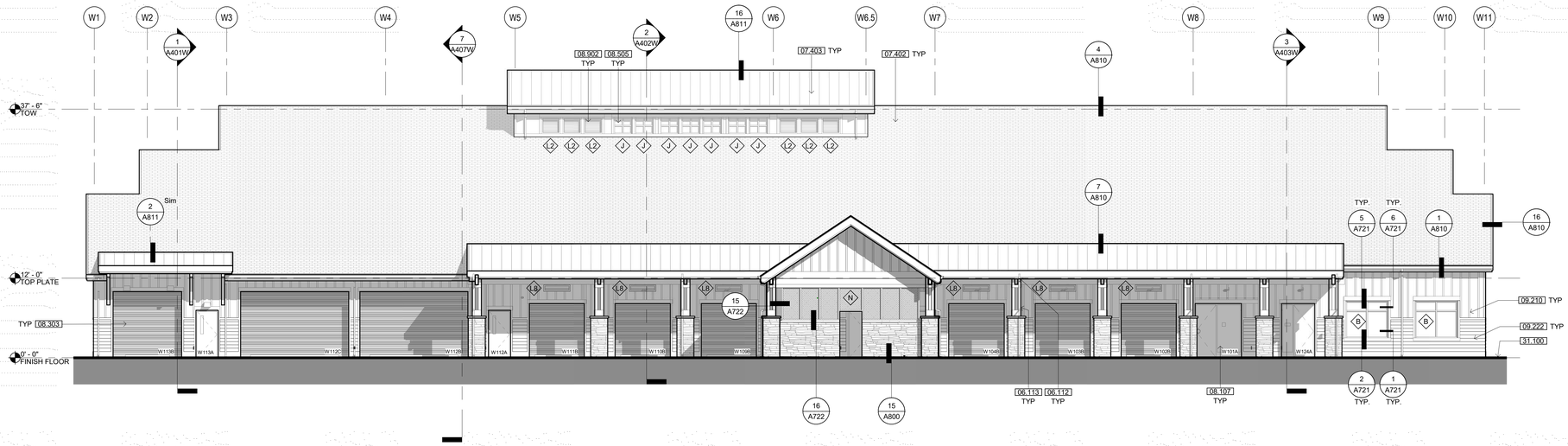

2 WEST ELEVATION

SCALE: 1/8" = 1'-0"

KEYNOTES

04.400	ADHERED STONE VENEER WAINSCOT
06.104	HEAVY TIMBER KNEE BRACE, PAINTED
06.112	HEAVY TIMBER BEAM, PAINTED
06.113	HEAVY TIMBER COLUMN, PAINTED
07.402	COMPOSITION SHINGLE ROOFING
07.403	STANDING SEAM METAL ROOF SYSTEM, FACTORY PRE-FINISHED
07.604	FASCIA & TRIM, PAINTED
07.903	BOARD & BATTEN SIDING JOINT FLASHING, SEE DETAIL 16/A800
08.107	INSULATED METAL DOOR IN HOLLOW METAL FRAME, PAINTED
08.303	OVERHEAD COILING DOOR, FACTORY PRE-FINISHED
08.505	DUAL-GLAZED VINYL WINDOWS
08.902	METAL LOUVER
09.210	FIBER CEMENT BATTENS O/ FIBER CEMENT SIDING PANELS O/ RIGID INSULATION
09.222	FIBER CEMENT LAP SIDING SYSTEM O/ RIGID INSULATION
31.100	APPROXIMATE FINISH GRADE

EXTERIOR ELEV. LEGEND

B##X — DOOR TAG - SEE SCHEDULE, SHEET A710

X — WINDOW TAG - SEE SCHEDULE, SHEET A720

IDENTIFICATION STAMP
DIV. OF THE STATE ARCHITECT
APP: 02-118630 INC:
REVIEWED FOR
SS ☐ FLS ☐ ACS ☑
DATE: 04/13/2021

OFFICE OF THE STATE FIRE MARSHAL
APPROVED FIRE AND PANIC ONLY
Approval of this plan does not authorize or approve any omission or deviation from applicable regulations. Final approval is subject to field inspection. One set of approved plans shall be available on the project site at all times.
PERMIT NO. 20-N-2332-CP
REVIEWED BY: LEO CATAYLO, OSFM
DATE: 4 / /2021

DGS GENERAL SERVICES
Department of General Services
State of California
Real Estate Services Division
Project Management & Development Branch
707 Third Street, Suite 4-105
West Sacramento, California 95605

NICHOLS MELBURG & ROSSETTO ARCHITECTS + ENGINEERS
300 Knollcrest Drive
Redding, CA. 96002
(530) 222-3300 (530) 222-3538 FAX
http://www.nmrdesign.com

Copyright © 2020
All ideas, designs, arrangements and plans indicated or represented by this drawing are owned by, and the property of, NICHOLS, MELBURG and ROSSETTO and were created, evolved and developed for use on, and in conjunction with, the specified project. None of such ideas, designs, arrangements or plans shall be used by, or disclosed to any person, firm or corporation for any purpose whatsoever without the written permission of NICHOLS, MELBURG and ROSSETTO.

LICENSE STAMPS

LICENSED ARCHITECT — KYLE MAY — 27504 — REN. 10/31/21 — STATE OF CALIFORNIA

CONSULTANT

DRAWING STATUS
CONSTRUCTION DOCUMENTS

ISSUE

No.	Date	Description
1	10/20/2020	INITIAL PLAN REVIEW
2	01/22/2021	AGENCY RESUBMITTAL
3	03/22/2021	AGENCY RESUBMITTAL

If drawing is not 30" x 42" it is a reduced print

PROJECT
RESIDENTIAL CENTER, UKIAH: REPLACEMENT OF EXISTING RESIDENTIAL CENTER
440 EAST HILL ROAD
WILLITS, CALIFORNIA 95490
MENDOCINO COUNTY
CALIFORNIA CONSERVATION CORP

Supervisor	Designed	Drawn
KJM	DMH	CD

DSA Application No.
02-118630

SHEET TITLE
WAREHOUSE BLDG. EXTERIOR ELEVATIONS

DGS Project Number: 000000000001826
NMR Project Number: 18-6456

Reference North: NORTH
Sheet Scale: 1/8" = 1'-0"
Sheet Number: A300W

ISSUE DATE
July 9, 2021

Plot Date: 3/19/2021 1:42:54 AM
File Name: BIM 360://CCC-Willits Residential Center/A_CCC-WRC-WAREHOUSE.rvt

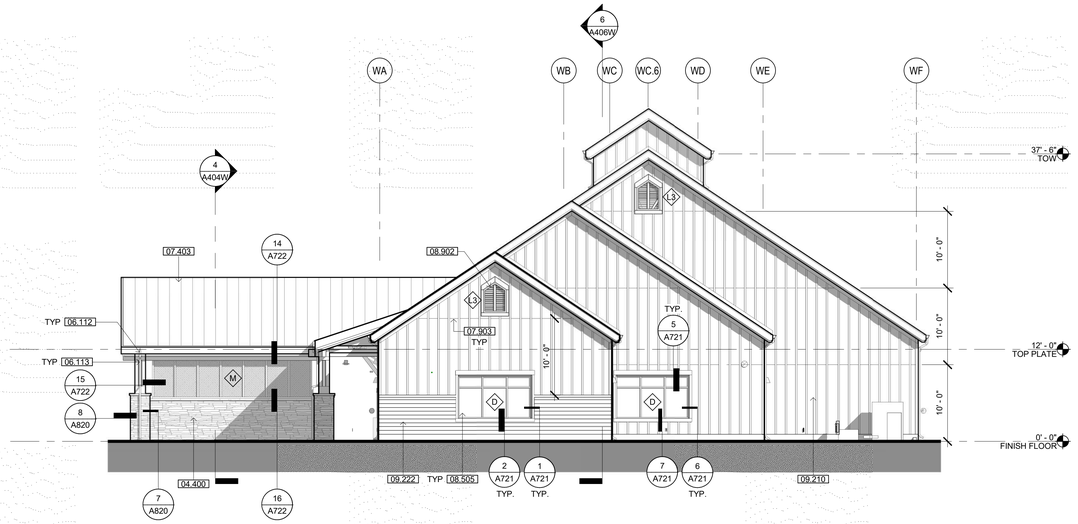

1 SOUTH ELEVATION

SCALE: 1/8" = 1'-0"

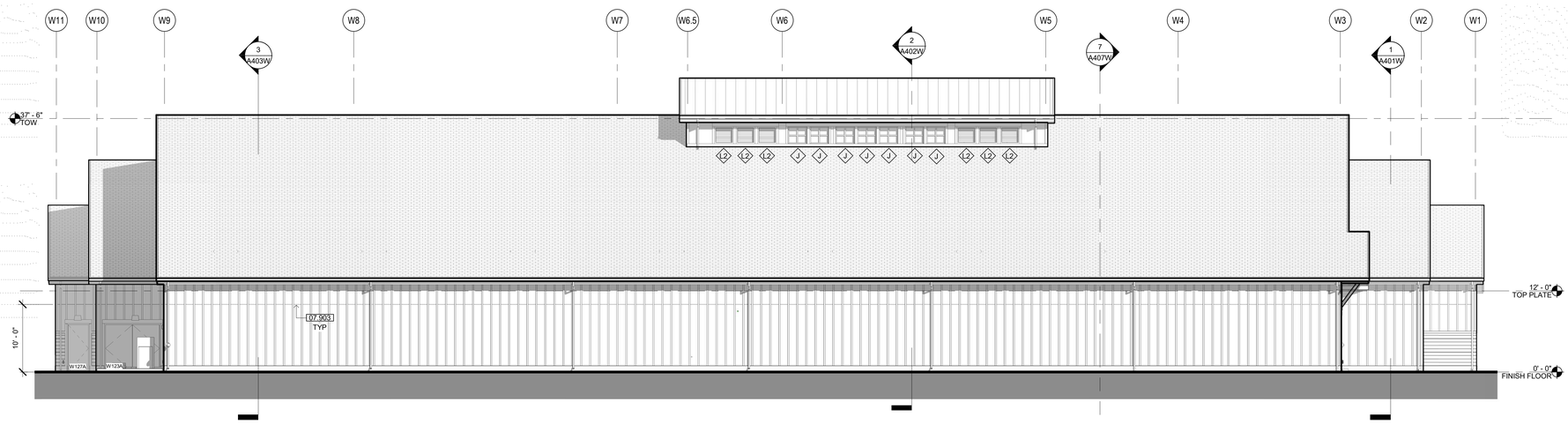

2 EAST ELEVATION

SCALE: 1/8" = 1'-0"

KEYNOTES

04.400	ADHERED STONE VENEER WAINSCOT
06.112	HEAVY TIMBER BEAM, PAINTED
06.113	HEAVY TIMBER COLUMN, PAINTED
07.403	STANDING SEAM METAL ROOF SYSTEM, FACTORY PRE-FINISHED
07.903	BOARD & BATTEN SIDING JOINT FLASHING, SEE DETAIL 16/A800
08.505	DUAL-GLAZED VINYL WINDOWS
08.902	METAL LOUVER
09.210	FIBER CEMENT BATTENS O/ FIBER CEMENT SIDING PANELS O/ RIGID INSULATION
09.222	FIBER CEMENT LAP SIDING SYSTEM O/ RIGID INSULATION

EXTERIOR ELEV. LEGEND

B##X — DOOR TAG - SEE SCHEDULE, SHEET A710

X — WINDOW TAG - SEE SCHEDULE, SHEET A720

IDENTIFICATION STAMP
DIV. OF THE STATE ARCHITECT
APP: 02-118630 INC:
REVIEWED FOR
SS ☐ FLS ☐ ACS ☑
DATE: 04/13/2021

OFFICE OF THE STATE FIRE MARSHAL
APPROVED FIRE AND PANIC ONLY
Approval of this plan does not authorize or approve any omission or deviation from applicable regulations. Final approval is subject to field inspection. One set of approved plans shall be available on the project site at all times.
PERMIT NO. 20-N-2332-CP
REVIEWED BY: LEO CATAYLO, OSFM
DATE: 4 / /2021

GENERAL SERVICES
Department of General Services
State of California
Real Estate Services Division
Project Management & Development Branch
707 Third Street, Suite 4-105
West Sacramento, California 95605

NICHOLS MELBURG & ROSSETTO
ARCHITECTS + ENGINEERS
300 Knollcrest Drive
Redding, CA. 96002
(530) 222-3300 (530) 222-3538 FAX
http://www.nmrdesign.com

Copyright © 2020
All ideas, designs, arrangements and plans indicated or represented by this drawing are owned by, and the property of, NICHOLS, MELBURG and ROSSETTO and were created, evolved and developed for use on, and in conjunction with, the specified project. None of such ideas, designs, arrangements or plans shall be used by, or disclosed to any person, firm or corporation for any purpose whatsoever without the written permission of NICHOLS, MELBURG and ROSSETTO.

LICENSE STAMPS

LICENSED ARCHITECT — KYLE MAY — C-31504 — REN. 10/31/21 — STATE OF CALIFORNIA

CONSULTANT

DRAWING STATUS
CONSTRUCTION DOCUMENTS

ISSUE

No.	Date	Description
1	10/20/2020	INITIAL PLAN REVIEW
2	01/22/2021	AGENCY RESUBMITTAL
3	03/22/2021	AGENCY RESUBMITTAL

If drawing is not 30" x 42" it is a reduced print

PROJECT
RESIDENTIAL CENTER, UKIAH: REPLACEMENT OF EXISTING RESIDENTIAL CENTER
440 EAST HILL ROAD
WILLITS, CALIFORNIA 95490
MENDOCINO COUNTY
CALIFORNIA CONSERVATION CORP

Supervisor	Designed	Drawn
KJM	DMH	Author

DSA Application No.
02-118630

SHEET TITLE
WAREHOUSE BLDG. EXTERIOR ELEVATIONS

DGS Project Number	NMR Project Number
000000000001826	18-6456

Reference North — NORTH
Sheet Scale: 1/8" = 1'-0"
Sheet Number: A301W

ISSUE DATE
July 9, 2021

Plot Date: 3/19/2021 1:44:54 AM
File Name: BIM 360://CCC-Willits Residential Center/A_CCC-WRC-WAREHOUSE.rvt

KEYNOTES

03.302	CONCRETE SLAB, SEE STRUCTURAL DRAWINGS
03.303	CONCRETE FOOTING, SEE STRUCTURAL DRAWINGS
03.305	CONCRETE WALKWAY SLOPED 1.5% AWAY FROM BUILDING
04.400	ADHERED STONE VENEER WAINSCOT
05.516	DIAMOND PLATE SLATWALL SYSTEM
06.104	HEAVY TIMBER KNEE BRACE, PAINTED
06.109	WOOD FRAMED TRUSS
06.113	HEAVY TIMBER COLUMN, PAINTED
07.403	STANDING SEAM METAL ROOF SYSTEM, FACTORY PRE-FINISHED
07.604	FASCIA & TRIM, PAINTED
08.303	OVERHEAD COILING DOOR, FACTORY PRE-FINISHED
08.902	METAL LOUVER
09.210	FIBER CEMENT BATTENS O/ FIBER CEMENT SIDING PANELS O/ RIGID INSULATION
09.711	PLYWOOD - SEE FINISH SCHEDULE

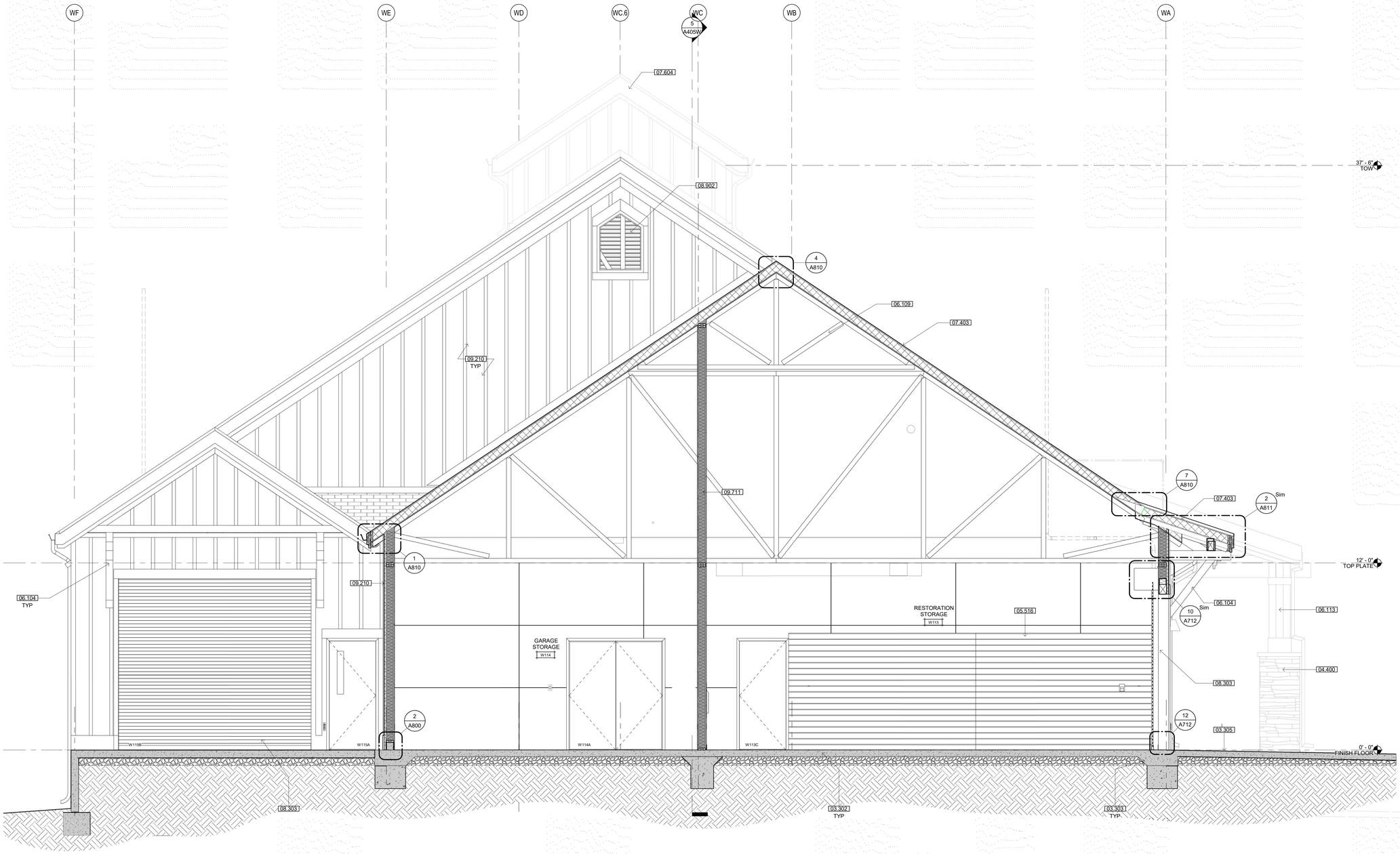

1 BUILDING SECTION

SCALE: 3/8" = 1'-0"

IDENTIFICATION STAMP
DIV. OF THE STATE ARCHITECT
APP: 02-118630 INC:
REVIEWED FOR
SS ☐ FLS ☐ ACS ☑
DATE: 04/13/2021

OFFICE OF THE STATE FIRE MARSHAL
APPROVED FIRE AND PANIC ONLY
Approval of this plan does not authorize or approve any omission or deviation from applicable regulations. Final approval is subject to field inspection. One set of approved plans shall be available on the project site at all times.
PERMIT NO. 20-N-2332-CP
REVIEWED BY: LEO CATAYLO, OSFM
DATE: 4 / /2021

GENERAL SERVICES
Department of General Services
State of California
Real Estate Services Division
Project Management & Development Branch
707 Third Street, Suite 4-105
West Sacramento, California 95605

NICHOLS MELBURG & ROSSETTO
ARCHITECTS + ENGINEERS
300 Knollcrest Drive
Redding, CA. 96002
(530) 222-3300 (530) 222-3538 FAX
http://www.nmrdesign.com

Copyright © 2020
All ideas, designs, arrangements and plans indicated or represented by this drawing are owned by, and the property of, NICHOLS, MELBURG and ROSSETTO and were created, evolved and developed for use on, and in conjunction with, the specified project. None of such ideas, designs, arrangements or plans shall be used by, or disclosed to any person, firm or corporation for any purpose whatsoever without the written permission of NICHOLS, MELBURG and ROSSETTO

LICENSE STAMPS

LICENSED ARCHITECT KYLE MATTHEW TAYLOR C-21504 REN. 10/31/21 STATE OF CALIFORNIA

CONSULTANT

DRAWING STATUS
CONSTRUCTION DOCUMENTS

ISSUE

No.	Date	Description
1	10/20/2020	INITIAL PLAN REVIEW
2	01/22/2021	AGENCY RESUBMITTAL
3	03/22/2021	AGENCY RESUBMITTAL

If drawing is not 30" x 42" it is a reduced print

PROJECT
RESIDENTIAL CENTER, UKIAH: REPLACEMENT OF EXISTING RESIDENTIAL CENTER
440 EAST HILL ROAD
WILLITS, CALIFORNIA 95490
MENDOCINO COUNTY
CALIFORNIA CONSERVATION CORP

Supervisor	Designed	Drawn
KJM	DMH	CD

DSA Application No.
02-118630

SHEET TITLE
WAREHOUSE BLDG. SECTIONS

DGS Project Number	NMR Project Number
000000000001826	18-6456

Reference North: NORTH
Sheet Scale: 3/8" = 1'-0"
Sheet Number: A401W

ISSUE DATE
July 9, 2021

Plot Date: 5/19/2021 9:45:56 AM
File Name: 8184 3001 DCSC-Willits Residential Center\A_CCC-WRC-WAREHOUSE.rvt

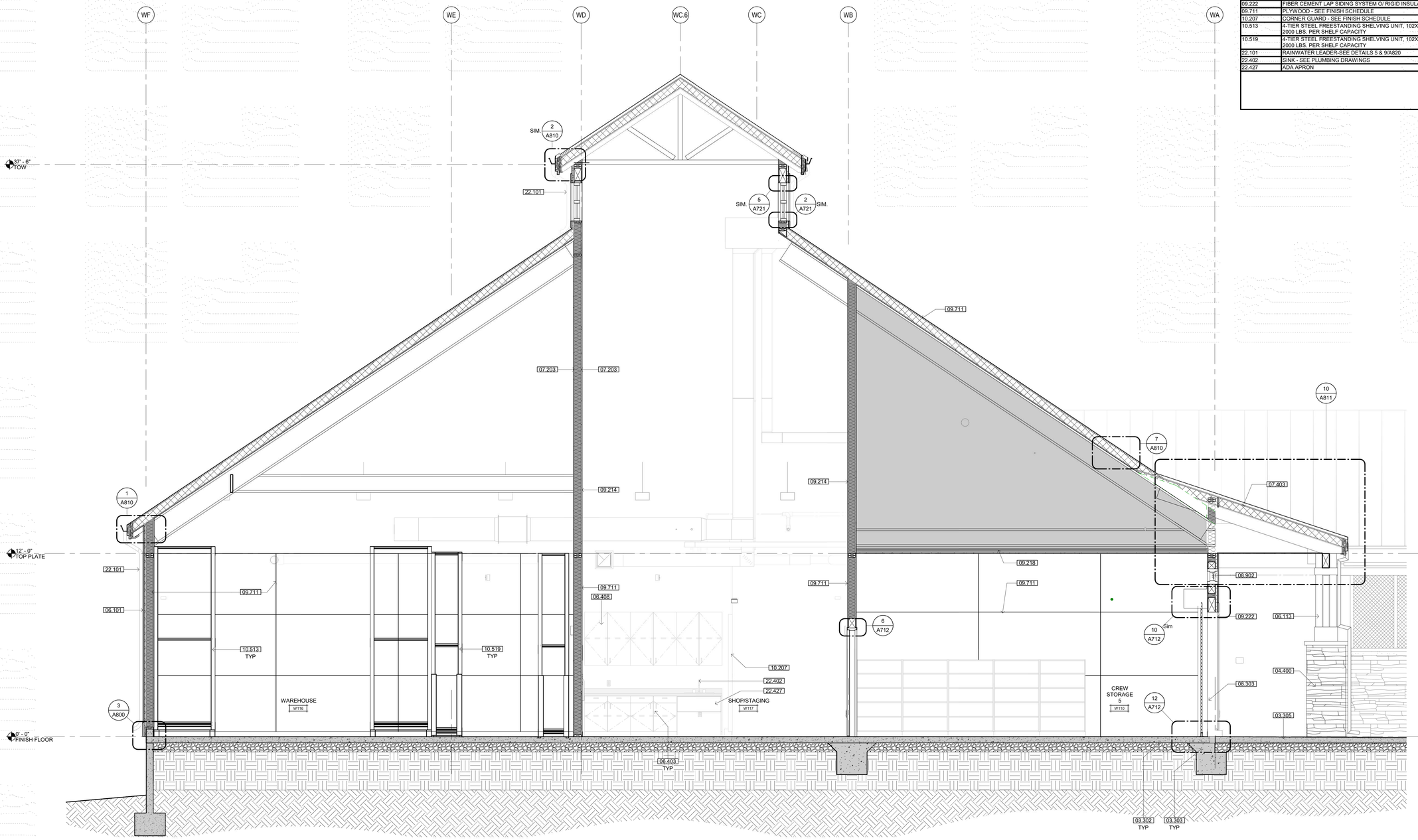

KEYNOTES

03.302	CONCRETE SLAB, SEE STRUCTURAL DRAWINGS
03.303	CONCRETE FOOTING, SEE STRUCTURAL DRAWINGS
03.305	CONCRETE WALKWAY SLOPED 1.5% AWAY FROM BUILDING
04.400	ADHERED STONE VENEER WAINSCOT
06.101	2X FRAMING
06.113	HEAVY TIMBER COLUMN, PAINTED
06.403	BASE CABINET
06.408	UPPER CABINETS SHOWN DASHED WHERE OCCURS
07.203	BATT INSULATION
07.403	STANDING SEAM METAL ROOF SYSTEM, FACTORY PRE-FINISHED
08.303	OVERHEAD COILING DOOR, FACTORY PRE-FINISHED
08.902	METAL LOUVER
09.214	GYPSUM BOARD, TYP.
09.218	GYPSUM BOARD CEILING ATTACHED TO BOTTOM CORD OF ROOF TRUSS
09.222	FIBER CEMENT LAP SIDING SYSTEM O/ RIGID INSULATION
09.711	PLYWOOD - SEE FINISH SCHEDULE
10.207	CORNER GUARD - SEE FINISH SCHEDULE
10.513	4-TIER STEEL FREESTANDING SHELVING UNIT, 102X96X44" 2000 LBS. PER SHELF CAPACITY
10.519	4-TIER STEEL FREESTANDING SHELVING UNIT, 102X96X24" 2000 LBS. PER SHELF CAPACITY
22.101	RAINWATER LEADER-SEE DETAILS 5 & 9/A820
22.402	SINK - SEE PLUMBING DRAWINGS
22.427	ADA APRON

2 BUILDING SECTION

SCALE: 3/8" = 1'-0"

IDENTIFICATION STAMP
DIV. OF THE STATE ARCHITECT
APP: 02-118630 INC:
REVIEWED FOR
SS ☐ FLS ☐ ACS ☑
DATE: 04/13/2021

OFFICE OF THE STATE FIRE MARSHAL
APPROVED FIRE AND PANIC ONLY
Approval of this plan does not authorize or approve any omission or deviation from applicable regulations. Final approval is subject to field inspection. One set of approved plans shall be available on the project site at all times.
PERMIT NO. 20 N 2332 CP
REVIEWED BY: LEO CATAYLO, OSFM
DATE: 4 / /2021

DGS GENERAL SERVICES
Department of General Services
State of California
Real Estate Services Division
Project Management & Development Branch
707 Third Street, Suite 4-105
West Sacramento, California 95605

NICHOLS MELBURG & ROSSETTO
ARCHITECTS + ENGINEERS
300 Knollcrest Drive
Redding, CA. 96002
(530) 222-3300 (530) 222-3538 FAX
http://www.nmrdesign.com

Copyright © 2020
All ideas, designs, arrangements and plans indicated or represented by this drawing are owned by, and the property of, NICHOLS, MELBURG and ROSSETTO and were created, evolved and developed for use on, and in conjunction with, the specified project. None of such ideas, designs, arrangements or plans shall be used by, or disclosed to any person, firm or corporation for any purpose whatsoever without the written permission of NICHOLS, MELBURG and ROSSETTO

LICENSE STAMPS

LICENSED ARCHITECT KYLE MATTHEW ROSSETTO C-27504 REN 10/31/21 STATE OF CALIFORNIA

CONSULTANT

DRAWING STATUS
CONSTRUCTION DOCUMENTS

ISSUE

No.	Date	Description
1	10/20/2020	INITIAL PLAN REVIEW
2	01/22/2021	AGENCY RESUBMITTAL
3	03/22/2021	AGENCY RESUBMITTAL

If drawing is not 30" x 42" it is a reduced print

PROJECT
RESIDENTIAL CENTER, UKIAH: REPLACEMENT OF EXISTING RESIDENTIAL CENTER
440 EAST HILL ROAD
WILLITS, CALIFORNIA 95490
MENDOCINO COUNTY
CALIFORNIA CONSERVATION CORP

Supervisor	Designed	Drawn
KJM	DMH	Author

DSA Application No.
02-118630

SHEET TITLE
WAREHOUSE BLDG. SECTIONS

DGS Project Number	NMR Project Number
000000000001826	18-6456

Reference North

Sheet Scale
3/8" = 1'-0"

Sheet Number
A402W

ISSUE DATE
July 9, 2021

Plot Date: 3/19/2021 8:47:01 AM
File Name: BIM 360://CCC-Willits Residential Center/A_CCC-WRC-WAREHOUSE.rvt

KEYNOTES

03.302	CONCRETE SLAB, SEE STRUCTURAL DRAWINGS
03.303	CONCRETE FOOTING, SEE STRUCTURAL DRAWINGS
04.400	ADHERED STONE VENEER WAINSCOT
06.113	HEAVY TIMBER COLUMN, PAINTED
07.402	COMPOSITION SHINGLE ROOFING
07.403	STANDING SEAM METAL ROOF SYSTEM, FACTORY PRE-FINISHED
07.700	ACCESS HATCH - REFER TO 12/A931
09.214	GYPSUM BOARD, TYP.
09.502	SUSPENDED ACOUSTICAL CEILING SYSTEM
09.600	BASE-SEE FINISH SCHEDULE
09.711	PLYWOOD - SEE FINISH SCHEDULE
10.207	CORNER GUARD - SEE FINISH SCHEDULE
10.513	4-TIER STEEL FREESTANDING SHELVING UNIT, 102X96X44" 2000 LBS. PER SHELF CAPACITY
12.201	SINGLE ROLL WINDOW SHADE, MANUAL. SEE DETAIL 18/A961

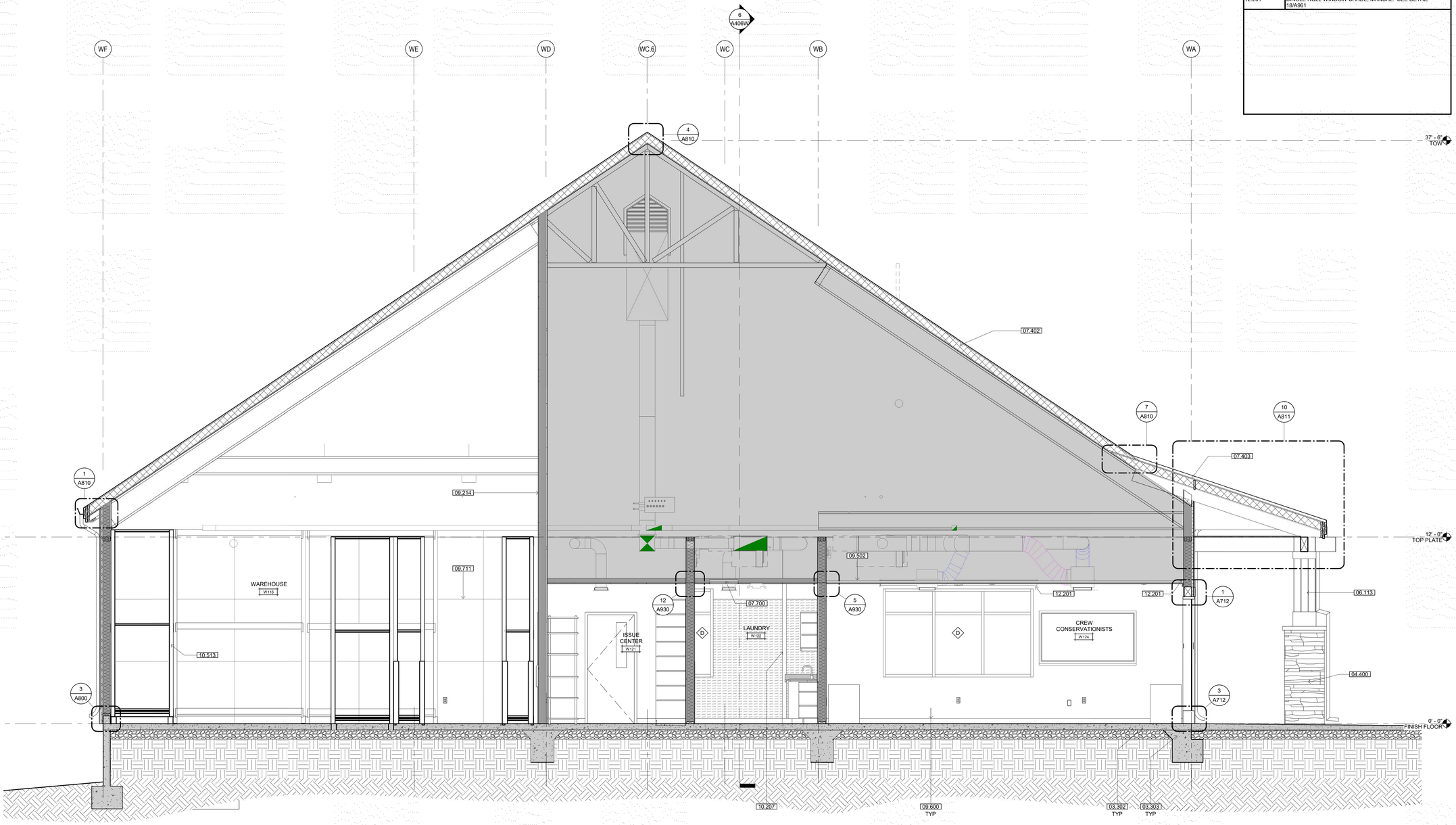

3 BUILDING SECTION

SCALE: 3/8" = 1'-0"

IDENTIFICATION STAMP
DIV. OF THE STATE ARCHITECT
APP: 02-118630 INC:
REVIEWED FOR
SS ☐ FLS ☐ ACS ☑
DATE: 04/13/2021

OFFICE OF THE STATE FIRE MARSHAL
APPROVED FIRE AND PANIC ONLY
Approval of this plan does not authorize or approve any omission or deviation from applicable regulations. Final approval is subject to field inspection. One set of approved plans shall be available on the project site at all times.
PERMIT NO. 20-N-2332-CP
REVIEWED BY: LEO CATAYLO, OSFM
DATE: 4 / /2021

GENERAL SERVICES
Department of General Services
State of California
Real Estate Services Division
Project Management & Development Branch
707 Third Street, Suite 4-105
West Sacramento, California 95605

NICHOLS MELBURG & ROSSETTO
ARCHITECTS + ENGINEERS
300 Knollcrest Drive
Redding, CA. 96002
(530) 222-3300 (530) 222-3538 FAX
http://www.nmrdesign.com

Copyright © 2020
All ideas, designs, arrangements and plans indicated or represented by this drawing are owned by, and the property of, NICHOLS, MELBURG and ROSSETTO and were created, evolved and developed for use on, and in conjunction with, the specified project. None of such ideas, designs, arrangements or plans shall be used by, or disclosed to any person, firm or corporation for any purpose whatsoever without the written permission of NICHOLS, MELBURG and ROSSETTO

LICENSE STAMPS

LICENSED ARCHITECT KYLE MATTHEW JOHNSON C-31504 REN. 10/31/21 STATE OF CALIFORNIA

CONSULTANT

DRAWING STATUS
CONSTRUCTION DOCUMENTS

ISSUE

No.	Date	Description
1	10/20/2020	INITIAL PLAN REVIEW
2	01/22/2021	AGENCY RESUBMITTAL
3	03/22/2021	AGENCY RESUBMITTAL

If drawing is not 30" x 42" it is a reduced print

PROJECT
RESIDENTIAL CENTER, UKIAH: REPLACEMENT OF EXISTING RESIDENTIAL CENTER
440 EAST HILL ROAD
WILLITS, CALIFORNIA 95490
MENDOCINO COUNTY
CALIFORNIA CONSERVATION CORP

Supervisor	Designed	Drawn
KJM	DMH	Author

DSA Application No.
02-118630

SHEET TITLE
WAREHOUSE BLDG. SECTIONS

DGS Project Number: 00000000001826
NMR Project Number: 18-6456

Reference North: NORTH
Sheet Scale: 3/8" = 1'-0"
Sheet Number: A403W

ISSUE DATE
July 9, 2021

Plot Date: 3/19/2021 8:47:40 AM
File Name: BM 3002 //CCC Willits Residential Center/A_CCC-WRC-WAREHOUSE.rvt

KEYNOTES

03.302	CONCRETE SLAB, SEE STRUCTURAL DRAWINGS
03.303	CONCRETE FOOTING, SEE STRUCTURAL DRAWINGS
04.200	CMU
04.400	ADHERED STONE VENEER WAINSCOT
06.109	WOOD FRAMED TRUSS
07.403	STANDING SEAM METAL ROOF SYSTEM, FACTORY PRE-FINISHED
09.506	FIBER CEMENT SOFFIT PANEL
10.207	CORNER GUARD - SEE FINISH SCHEDULE
10.515	STAINLESS STEEL WORK TABLE 42X96X34"

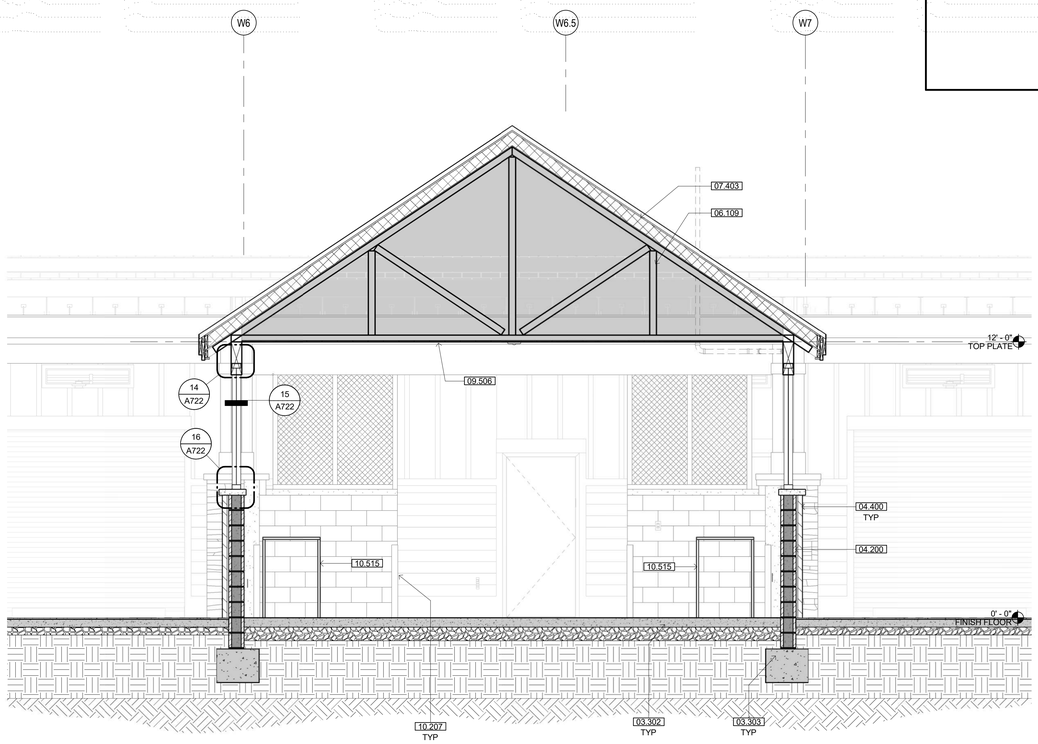

4 BUILDING SECTION

SCALE: 3/8" = 1'-0"

IDENTIFICATION STAMP
DIV. OF THE STATE ARCHITECT
APP: 02-118630 INC:
REVIEWED FOR
SS ☐ FLS ☐ ACS ☑
DATE: 04/13/2021

OFFICE OF THE STATE FIRE MARSHAL
APPROVED FIRE AND PANIC ONLY
Approval of this plan does not authorize or approve any omission or deviation from applicable regulations. Final approval is subject to field inspection. One set of approved plans shall be available on the project site at all times.
PERMIT NO. 20-N-2332-CP
REVIEWED BY: LEO CATAYLO, OSFM
DATE: 4 / /2021

GENERAL SERVICES
Department of General Services
State of California
Real Estate Services Division
Project Management & Development Branch
707 Third Street, Suite 4-105
West Sacramento, California 95605

NICHOLS MELBURG & ROSSETTO
ARCHITECTS + ENGINEERS
300 Knollcrest Drive
Redding, CA. 96002
(530) 222-3300 (530) 222-3538 FAX
http://www.nmrdesign.com

Copyright © 2020
All ideas, designs, arrangements and plans indicated or represented by this drawing are owned by, and the property of, NICHOLS, MELBURG and ROSSETTO and were created, evolved and developed for use on, and in conjunction with, the specified project. None of such ideas, designs, arrangements or plans shall be used by, or disclosed to any person, firm or corporation for any purpose whatsoever without the written permission of NICHOLS, MELBURG and ROSSETTO.

LICENSE STAMPS

LICENSED ARCHITECT KYLE MATTY NICHOLS C-21504 REN 10/31/21 STATE OF CALIFORNIA

CONSULTANT

DRAWING STATUS
CONSTRUCTION DOCUMENTS

ISSUE

No.	Date	Description
1	10/20/2020	INITIAL PLAN REVIEW
2	01/22/2021	AGENCY RESUBMITTAL
3	03/22/2021	AGENCY RESUBMITTAL

If drawing is not 30" x 42" it is a reduced print

PROJECT
RESIDENTIAL CENTER, UKIAH: REPLACEMENT OF EXISTING RESIDENTIAL CENTER
440 EAST HILL ROAD
WILLITS, CALIFORNIA 95490
MENDOCINO COUNTY
CALIFORNIA CONSERVATION CORP

Supervisor	Designed	Drawn
KJM	DMH	Author

DSA Application No.
02-118630

SHEET TITLE
WAREHOUSE BLDG. SECTIONS

DGS Project Number	NMR Project Number
00000000001826	18-6456

Reference North

Sheet Scale
3/8" = 1'-0"

Sheet Number
A404W

ISSUE DATE
July 9, 2021

Plot Date: 3/19/2021 8:48:56 AM
File Name: BIM 360://CCC Willits Residential Center/A_CCC-WRC-WAREHOUSE.rvt

KEYNOTES

03.302	CONCRETE SLAB, SEE STRUCTURAL DRAWINGS
03.303	CONCRETE FOOTING, SEE STRUCTURAL DRAWINGS
06.109	WOOD FRAMED TRUSS
07.402	COMPOSITION SHINGLE ROOFING
07.403	STANDING SEAM METAL ROOF SYSTEM, FACTORY PRE-FINISHED
08.303	OVERHEAD COILING DOOR, FACTORY PRE-FINISHED
09.210	FIBER CEMENT BATTENS O/ FIBER CEMENT SIDING PANELS O/ RIGID INSULATION
09.214	GYPSUM BOARD, TYP.
09.222	FIBER CEMENT LAP SIDING SYSTEM O/ RIGID INSULATION
09.711	PLYWOOD - SEE FINISH SCHEDULE
10.111	SIGNAGE - SEE SIGNAGE TYPES
23.018	HVLS CEILING FAN

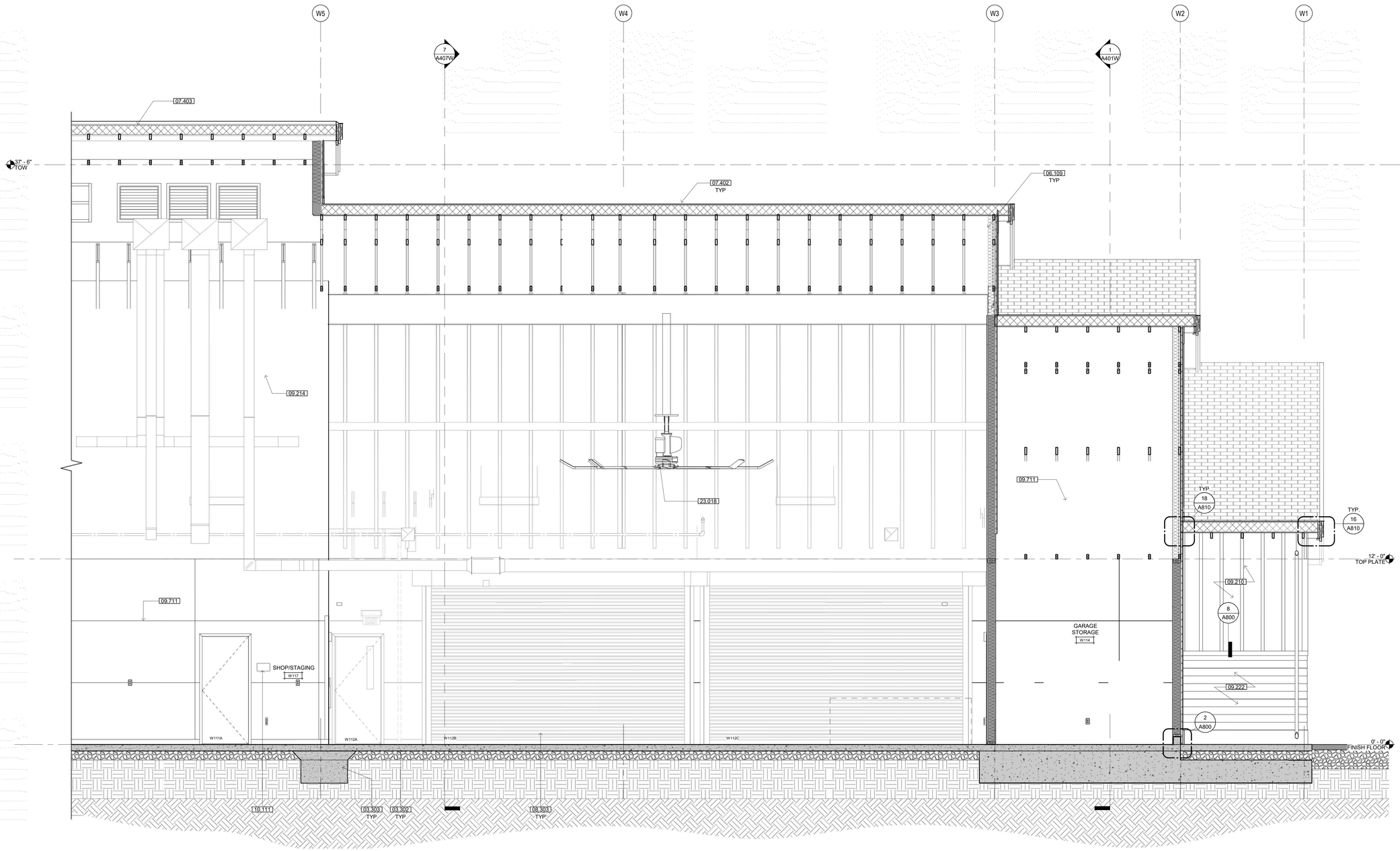

5 BUILDING SECTION

SCALE: 3/8" = 1'-0"

IDENTIFICATION STAMP
DIV. OF THE STATE ARCHITECT
APP: 02-118630 INC:
REVIEWED FOR
SS ☐ FLS ☐ ACS ☑
DATE: 04/13/2021

OFFICE OF THE STATE FIRE MARSHAL
APPROVED FIRE AND PANIC ONLY
Approval of this plan does not authorize or approve any omission or deviation from applicable regulations. Final approval is subject to field inspection. One set of approved plans shall be available on the project site at all times.
PERMIT NO. 20-N-2332-CP
REVIEWED BY: LEO CATAYLO, OSFM
DATE: 4 / /2021

GENERAL SERVICES
Department of General Services
State of California
Real Estate Services Division
Project Management & Development Branch
707 Third Street, Suite 4-105
West Sacramento, California 95605

NICHOLS MELBURG & ROSSETTO
ARCHITECTS + ENGINEERS
300 Knollcrest Drive
Redding, CA. 96002
(530) 222-3300 (530) 222-3538 FAX
http://www.nmrdesign.com

Copyright © 2020
All ideas, designs, arrangements and plans indicated or represented by this drawing are owned by, and the property of, NICHOLS, MELBURG and ROSSETTO and were created, evolved and developed for use on, and in conjunction with, the specified project. None of such ideas, designs, arrangements or plans shall be used by, or disclosed to any person, firm or corporation for any purpose whatsoever without the written permission of NICHOLS, MELBURG and ROSSETTO

LICENSE STAMPS

LICENSED ARCHITECT KYLE MATTHEW ROSSETTO C-27504 RENEWAL 10/31/21 STATE OF CALIFORNIA

CONSULTANT

DRAWING STATUS
CONSTRUCTION DOCUMENTS

ISSUE

No.	Date	Description
1	10/20/2020	INITIAL PLAN REVIEW
2	01/22/2021	AGENCY RESUBMITTAL
3	03/22/2021	AGENCY RESUBMITTAL

If drawing is not 30" x 42" it is a reduced print

PROJECT
RESIDENTIAL CENTER, UKIAH: REPLACEMENT OF EXISTING RESIDENTIAL CENTER
440 EAST HILL ROAD
WILLITS, CALIFORNIA 95490
MENDOCINO COUNTY
CALIFORNIA CONSERVATION CORP

Supervisor	Designed	Drawn
KJM	DMH	Author

DSA Application No.
02-118630

SHEET TITLE
WAREHOUSE BLDG. SECTIONS

DGS Project Number	NMR Project Number
00000000001826	18-6456

Reference North
Sheet Scale 3/8" = 1'-0"
Sheet Number A405W

ISSUE DATE
July 9, 2021

Plot Date: 3/19/2021 9:49:07 AM
File Name: BIM 360://CCC Willits Residential Center/A_CCC-WRC-WAREHOUSE.rvt

KEYNOTES

03.302	CONCRETE SLAB, SEE STRUCTURAL DRAWINGS
03.303	CONCRETE FOOTING, SEE STRUCTURAL DRAWINGS
06.109	WOOD FRAMED TRUSS
07.402	COMPOSITION SHINGLE ROOFING
09.600	BASE-SEE FINISH SCHEDULE
10.111	SIGNAGE - SEE SIGNAGE TYPES
10.207	CORNER GUARD - SEE FINISH SCHEDULE
22.429	EYE WASH

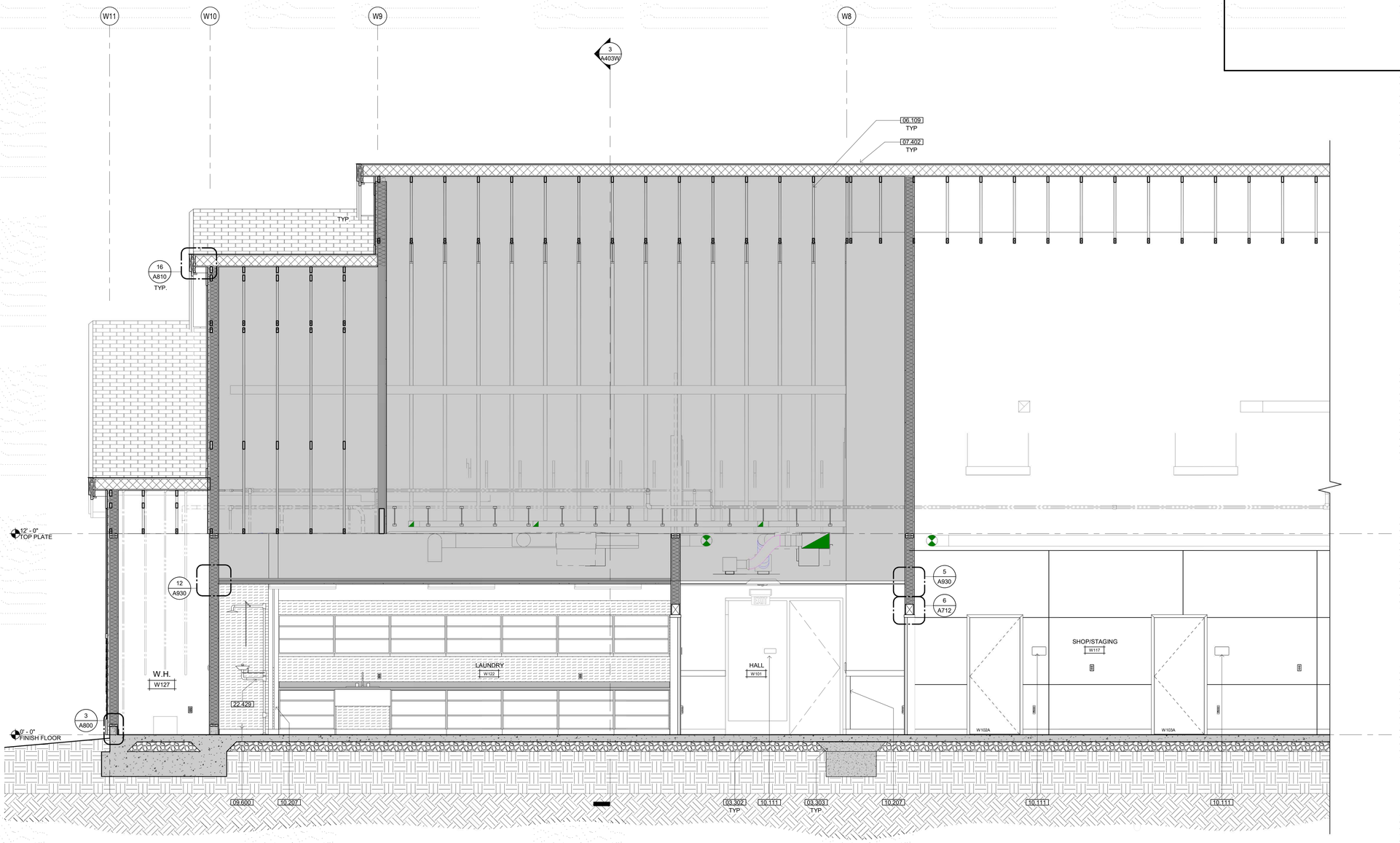

6 BUILDING SECTION

SCALE: 3/8" = 1'-0"

IDENTIFICATION STAMP
DIV. OF THE STATE ARCHITECT
APP: 02-118630 INC:
REVIEWED FOR
SS ☐ FLS ☐ ACS ☑
DATE: 04/13/2021

OFFICE OF THE STATE FIRE MARSHAL
APPROVED FIRE AND PANIC ONLY
Approval of this plan does not authorize or approve any omission or deviation from applicable regulations. Final approval is subject to field inspection. One set of approved plans shall be available on the project site at all times.
PERMIT NO. 20-N-2332-CP
REVIEWED BY: LEO CATAYLO, OSFM
DATE: 4 / /2021

GENERAL SERVICES
Department of General Services
State of California
Real Estate Services Division
Project Management & Development Branch
707 Third Street, Suite 4-105
West Sacramento, California 95605

NICHOLS MELBURG & ROSSETTO
ARCHITECTS + ENGINEERS
300 Knollcrest Drive
Redding, CA. 96002
(530) 222-3300 (530) 222-3538 FAX
http://www.nmrdesign.com

Copyright © 2020
All ideas, designs, arrangements and plans indicated or represented by this drawing are owned by, and the property of, NICHOLS, MELBURG and ROSSETTO and were created, evolved and developed for use on, and in conjunction with, the specified project. None of such ideas, designs, arrangements or plans shall be used by, or disclosed to any person, firm or corporation for any purpose whatsoever without the written permission of NICHOLS, MELBURG and ROSSETTO

LICENSE STAMPS

LICENSED ARCHITECT KYLE MATTHEW MELBURG C-27504 RENEWAL 10/31/21 STATE OF CALIFORNIA

CONSULTANT

DRAWING STATUS
CONSTRUCTION DOCUMENTS

ISSUE

No.	Date	Description
1	10/20/2020	INITIAL PLAN REVIEW
2	01/22/2021	AGENCY RESUBMITTAL
3	03/22/2021	AGENCY RESUBMITTAL

If drawing is not 30" x 42" it is a reduced print

PROJECT
RESIDENTIAL CENTER, UKIAH: REPLACEMENT OF EXISTING RESIDENTIAL CENTER
440 EAST HILL ROAD
WILLITS, CALIFORNIA 95490
MENDOCINO COUNTY
CALIFORNIA CONSERVATION CORP

Supervisor	Designed	Drawn
KJM	DMH	Author

DSA Application No.
02-118630

SHEET TITLE
WAREHOUSE BLDG. SECTIONS

DGS Project Number: 0000000000001826
NMR Project Number: 18-6456

Reference North: NORTH
Sheet Scale: 3/8" = 1'-0"
Sheet Number: A406W

ISSUE DATE
July 9, 2021

Plot Date: 3/19/2021 9:49:45 AM
File Name: 8th 360 /CCC-Willits Residential Center/A_CCC-WRC-WAREHOUSE.rvt

KEYNOTES

03.302	CONCRETE SLAB, SEE STRUCTURAL DRAWINGS
03.303	CONCRETE FOOTING, SEE STRUCTURAL DRAWINGS
06.104	HEAVY TIMBER KNEE BRACE, PAINTED
06.109	WOOD FRAMED TRUSS
07.402	COMPOSITION SHINGLE ROOFING
08.303	OVERHEAD COILING DOOR, FACTORY PRE-FINISHED
08.902	METAL LOUVER
09.222	FIBER CEMENT LAP SIDING SYSTEM O/ RIGID INSULATION
09.711	PLYWOOD - SEE FINISH SCHEDULE
10.111	SIGNAGE - SEE SIGNAGE TYPES
22.101	RAINWATER LEADER-SEE DETAILS 5 & 9/A820
23.018	HVLS CEILING FAN

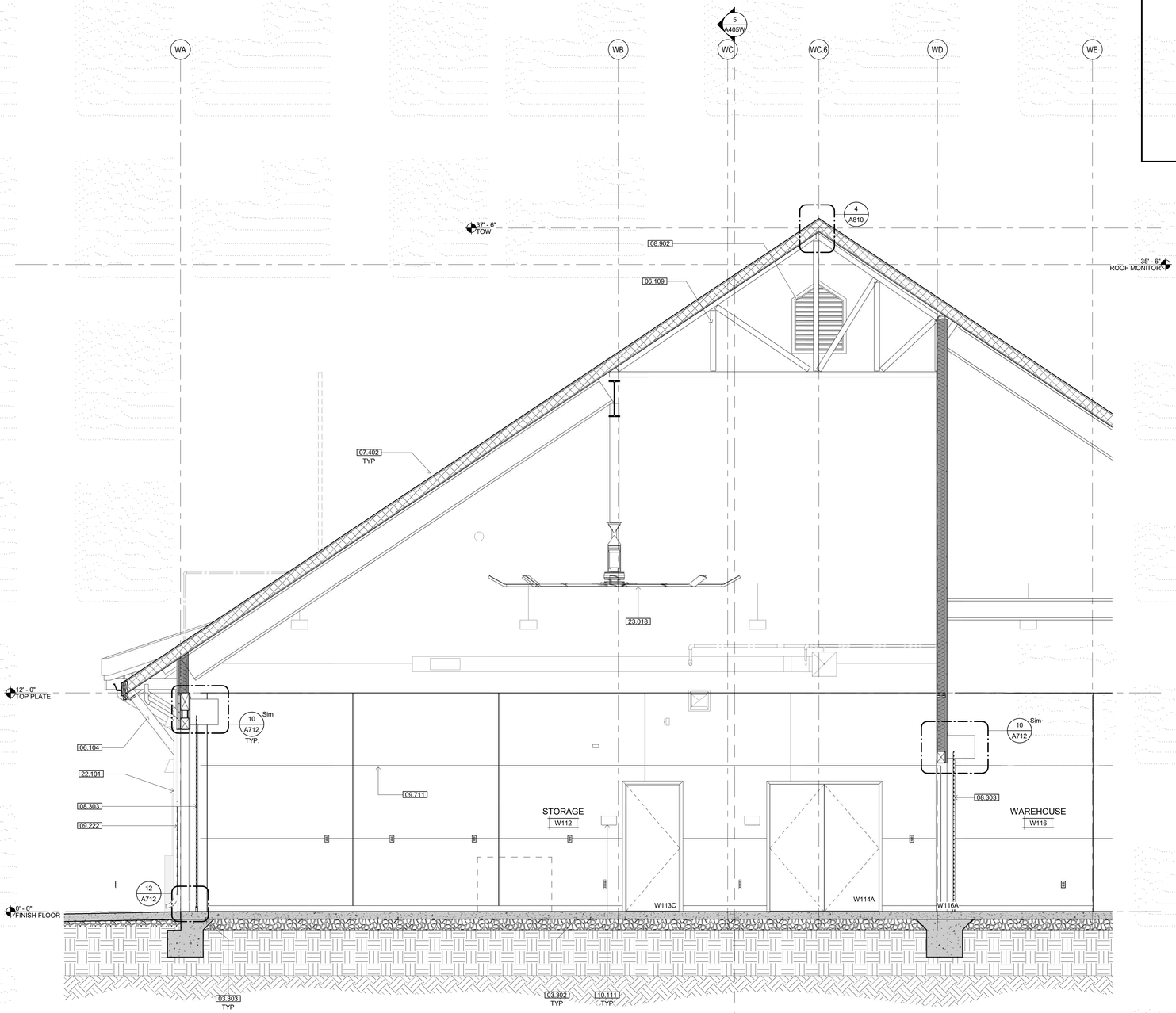

BUILDING SECTION

SCALE: 3/8" = 1'-0"

7

IDENTIFICATION STAMP
DIV. OF THE STATE ARCHITECT
APP: 02-118630 INC:
REVIEWED FOR
SS ☐ FLS ☐ ACS ☑
DATE: 04/13/2021

OFFICE OF THE STATE FIRE MARSHAL
APPROVED FIRE AND PANIC ONLY
Approval of this plan does not authorize or approve any omission or deviation from applicable regulations. Final approval is subject to field inspection. One set of approved plans shall be available on the project site at all times.
PERMIT NO. 20-N-2332-CP
REVIEWED BY: LEO CATAYLO, OSFM
DATE: 4 / /2021

GENERAL SERVICES
Department of General Services
State of California
Real Estate Services Division
Project Management & Development Branch
707 Third Street, Suite 4-105
West Sacramento, California 95605

NICHOLS MELBURG & ROSSETTO
ARCHITECTS + ENGINEERS
300 Knollcrest Drive
Redding, CA. 96002
(530) 222-3300 (530) 222-3538 FAX
http://www.nmrdesign.com

Copyright © 2020
All ideas, designs, arrangements and plans indicated or represented by this drawing are owned by, and the property of, NICHOLS, MELBURG and ROSSETTO and were created, evolved and developed for use on, and in conjunction with, the specified project. None of such ideas, designs, arrangements or plans shall be used by, or disclosed to any person, firm or corporation for any purpose whatsoever without the written permission of NICHOLS, MELBURG and ROSSETTO.

LICENSE STAMPS

LICENSED ARCHITECT
KYLE MATTHEW JOHNSON
C-31504
REN 10/31/21
STATE OF CALIFORNIA

CONSULTANT

DRAWING STATUS
CONSTRUCTION DOCUMENTS

ISSUE

No.	Date	Description
1	10/20/2020	INITIAL PLAN REVIEW
2	01/22/2021	AGENCY RESUBMITTAL
3	03/22/2021	AGENCY RESUBMITTAL

If drawing is not 30" x 42" it is a reduced print

PROJECT
RESIDENTIAL CENTER, UKIAH: REPLACEMENT OF EXISTING RESIDENTIAL CENTER
440 EAST HILL ROAD
WILLITS, CALIFORNIA 95490
MENDOCINO COUNTY
CALIFORNIA CONSERVATION CORP

Supervisor	Designed	Drawn
KJM	DMH	Author

DSA Application No.
02-118630

SHEET TITLE
WAREHOUSE BLDG. SECTIONS

DGS Project Number: 00000000001826
NMR Project Number: 18-6456

Reference North
Sheet Scale: 3/8" = 1'-0"
Sheet Number: A407W

ISSUE DATE
July 9, 2021

Plot Date: 2/10/2021 8:58:18 AM
File Name: BIM 360://CCC Willits Residential Center/A_CCC-WRC-WAREHOUSE.rvt

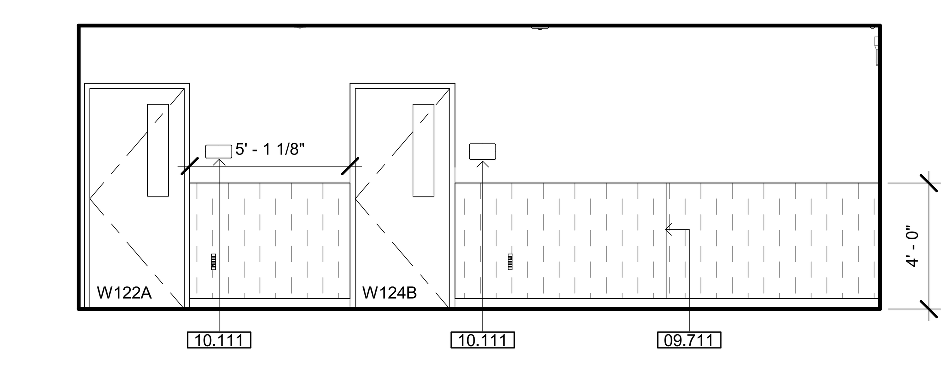

① W101 HALL - SOUTH
1/4" = 1'-0"

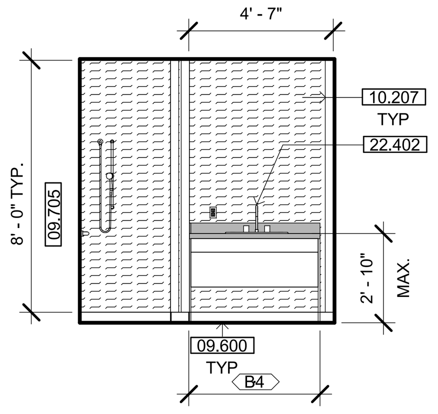

② W112 STORAGE - SOUTH
1/4" = 1'-0"

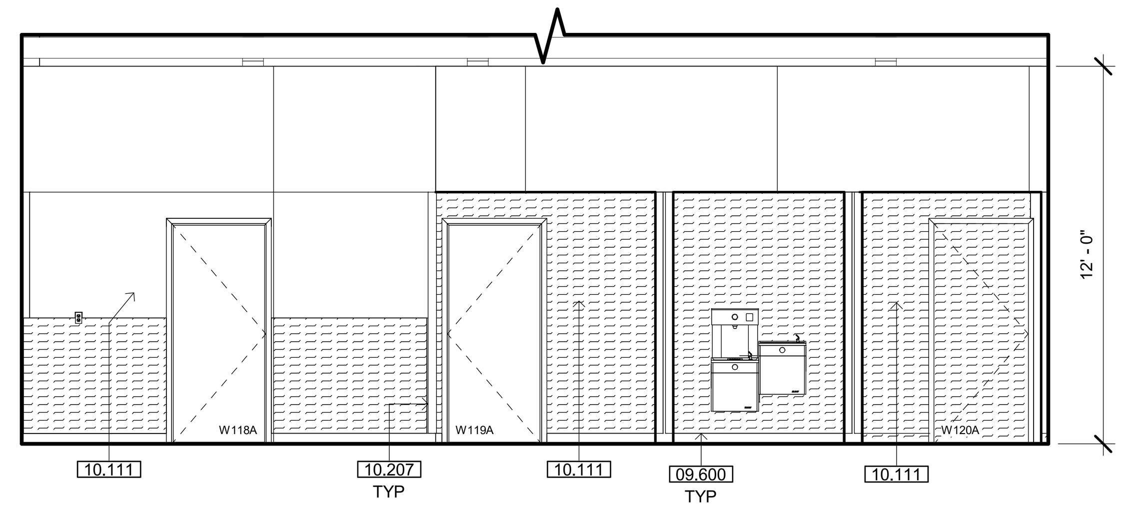

③ W117 SHOP/STAGING DRINKING FOUNTAIN - EAST
1/4" = 1'-0"

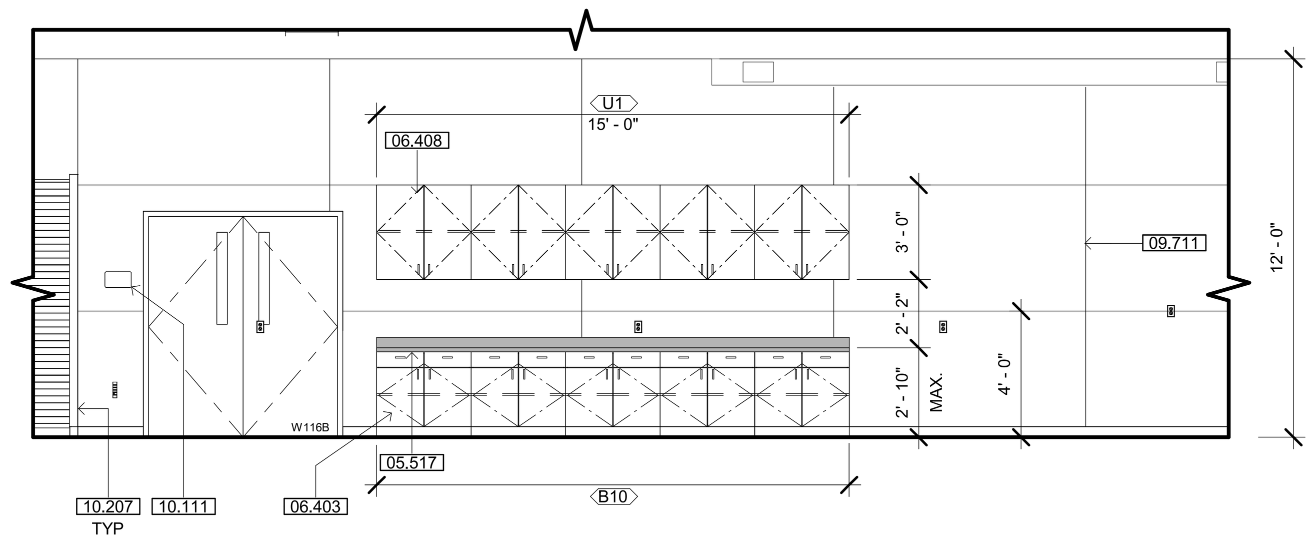

④ W117 SHOP/STAGING - EAST
1/4" = 1'-0"

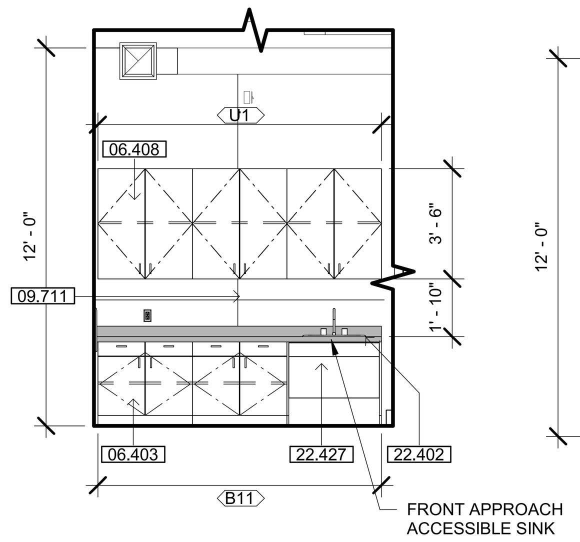

⑤ W117 SHOP/STAGING - SOUTH
1/4" = 1'-0"

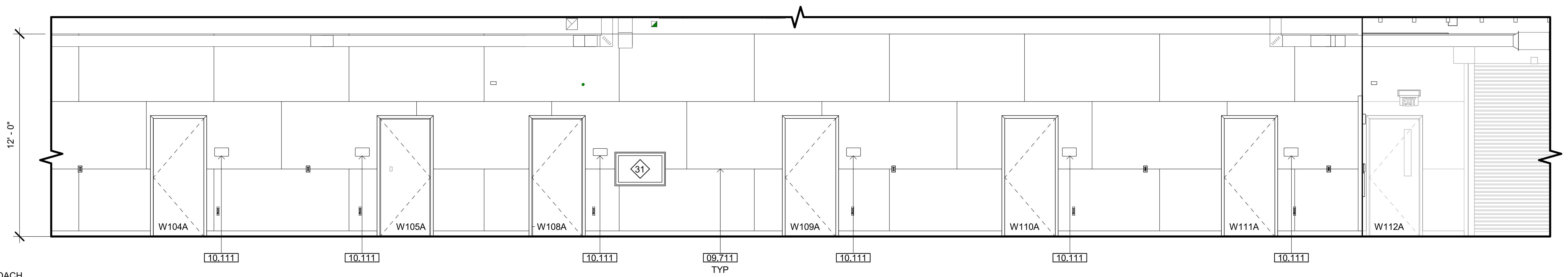

⑥ W117 SHOP/STAGING - WEST
1/4" = 1'-0"

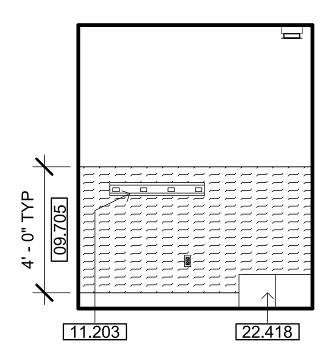

⑦ W118 JANITOR - EAST
1/4" = 1'-0"

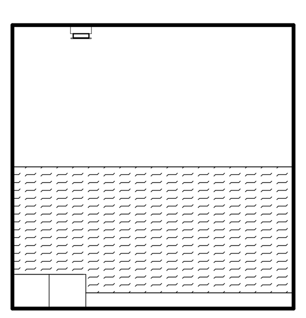

⑧ W118 JANITOR - SOUTH
1/4" = 1'-0"

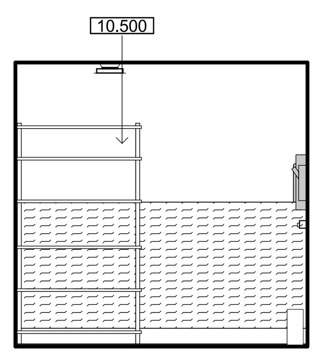

⑨ W118 JANITOR - NORTH
1/4" = 1'-0"

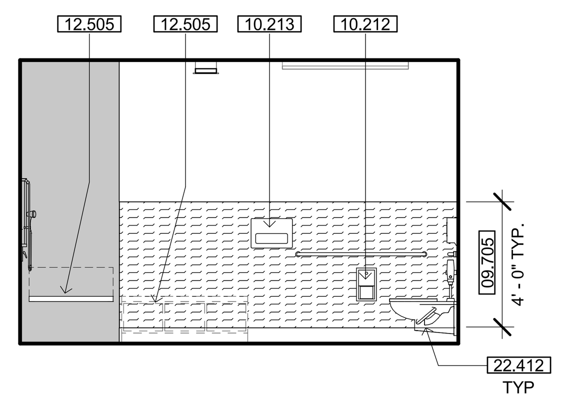

⑩ W119 SHOWER/RR - EAST
1/4" = 1'-0"

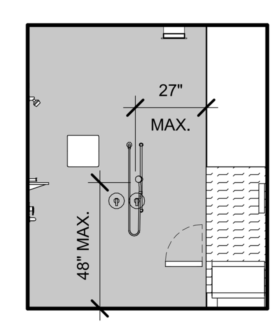

⑪ W119 SHOWER/RR - NORTH
1/4" = 1'-0"

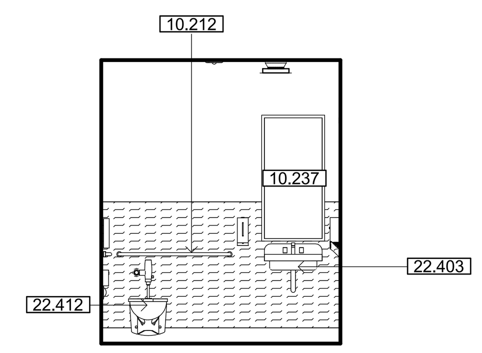

⑫ W119 SHOWER/RR - SOUTH
1/4" = 1'-0"

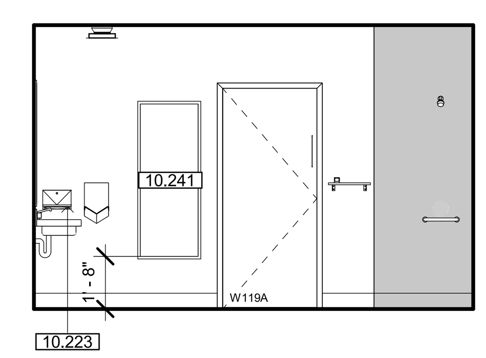

⑬ W119 SHOWER/RR - WEST
1/4" = 1'-0"

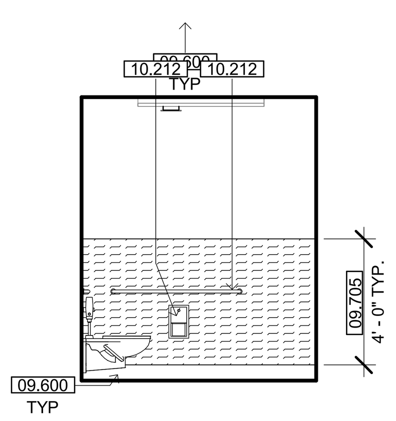

⑭ W120 RESTROOM - EAST
1/4" = 1'-0"

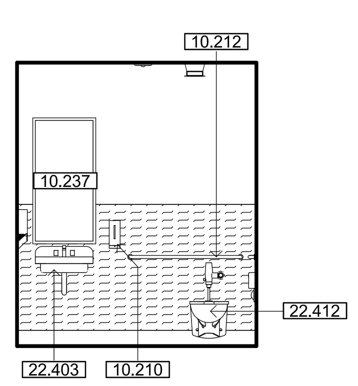

⑮ W120 RESTROOM - NORTH
1/4" = 1'-0"

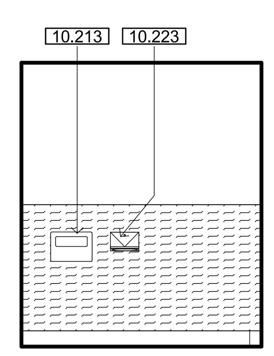

⑯ W120 RESTROOM - SOUTH
1/4" = 1'-0"

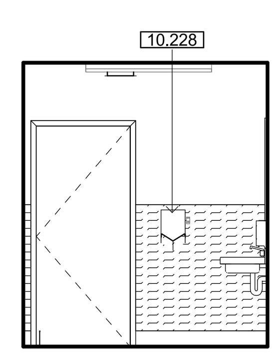

⑰ W120 RESTROOM - WEST
1/4" = 1'-0"

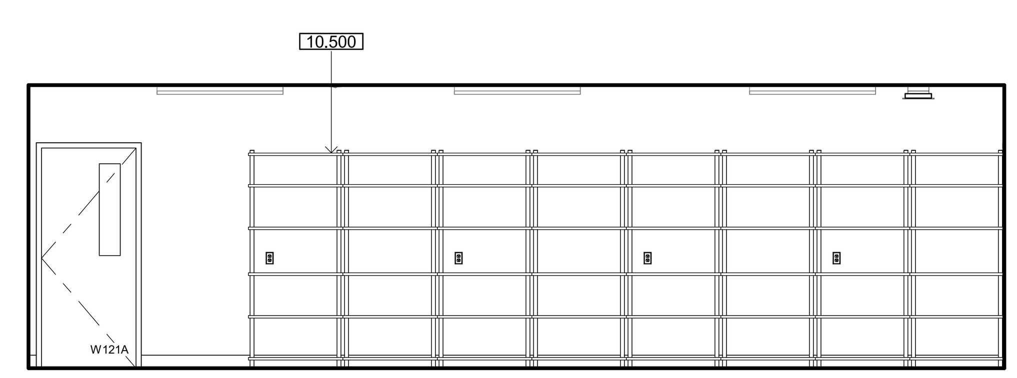

⑱ W121 ISSUE CENTER - EAST
1/4" = 1'-0"

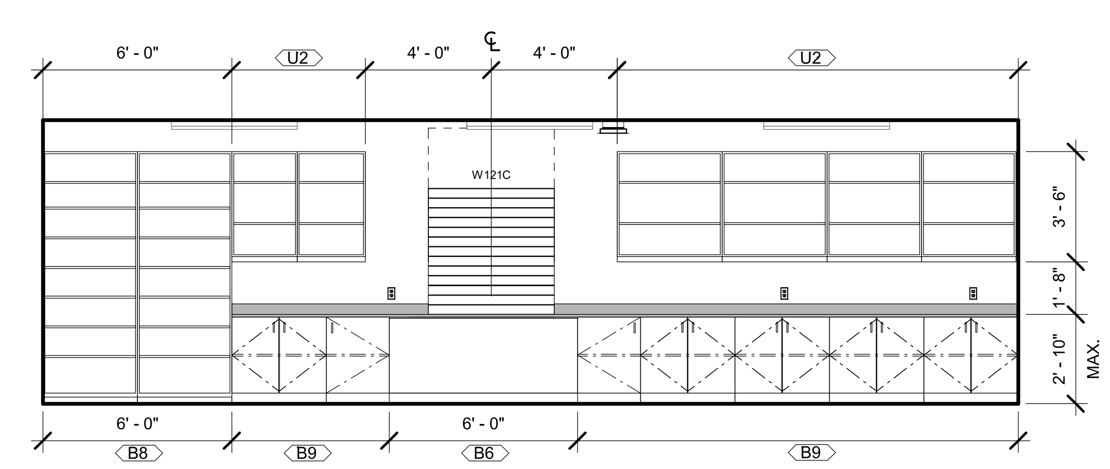

⑲ W121 ISSUE CENTER - WEST
1/4" = 1'-0"

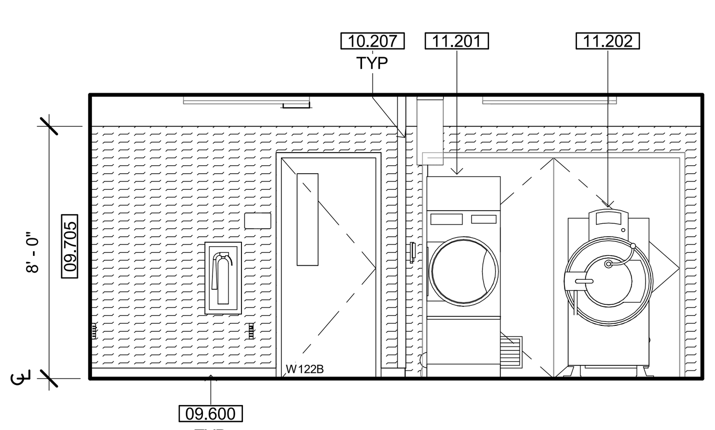

⑳ W 122 LAUNDRY - EAST
1/4" = 1'-0"

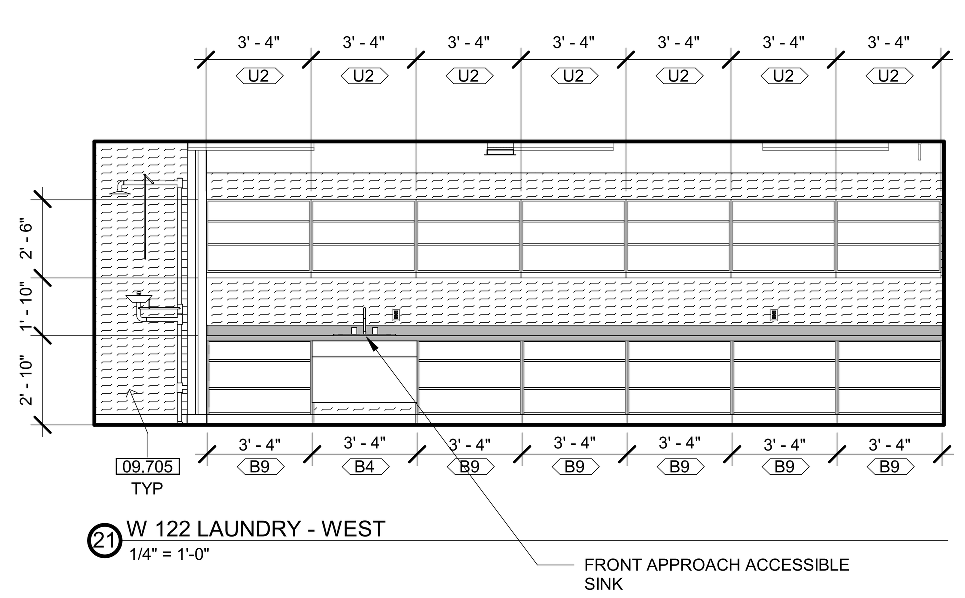

㉑ W 122 LAUNDRY - WEST
1/4" = 1'-0"

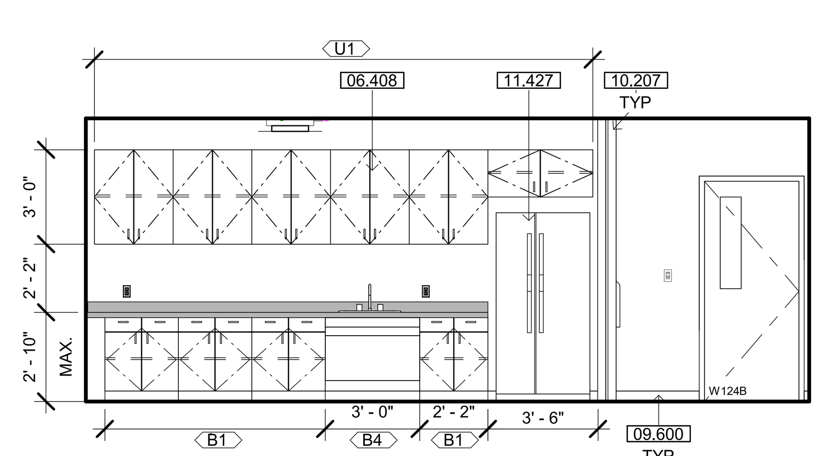

㉒ W124 CREW CONSERVATIONISTS
1/4" = 1'-0"

Plot Date: 3/19/2021 9:51:44 AM
File Name: BIM 360://CCC Willits Residential Center/A_CCC-WRC-WAREHOUSE.rvt

KEYNOTES

05.517	1/4" STEEL COUNTERTOP
06.403	BASE CABINET
06.408	UPPER CABINETS SHOWN DASHED WHERE OCCURS
09.600	BASE-SEE FINISH SCHEDULE
09.705	FRP PANEL-SEE FINISH SCHEDULE
09.711	PLYWOOD - SEE FINISH SCHEDULE
10.111	SIGNAGE - SEE SIGNAGE TYPES
10.207	CORNER GUARD - SEE FINISH SCHEDULE
10.210	SOAP DISPENSER
10.212	SEMI-RECESSED TOILET TISSUE DISPENSER
10.213	SURFACE MOUNTED TOILET SEAT COVER DISPENSER
10.223	SURFACE MOUNTED PAPER TOWEL DISPENSER
10.228	HAND DRYER
10.237	24"W X 48"H MIRROR
10.241	MIRROR, 24"W X 60"H FULL LENGTH, COMPLYING WITH CBC 803.6
10.500	METAL STORAGE SHELVING UNIT
11.201	COMMERCIAL WASHER
11.202	COMMERCIAL DRYER
11.203	COMBINATION UTILITY SHELF WITH MOP AND BROOM HOLDER
11.427	DOUBLE DOOR REFRIGERATOR
12.505	LOCKER ROOM BENCH, 20" X 48"
22.402	SINK - SEE PLUMBING DRAWINGS
22.403	LAVATORY - SEE PLUMBING DRAWINGS
22.412	ACCESSIBLE WALL HUNG TOILET
22.418	JANITOR SINK-SEE PLUMBING DRAWINGS
22.427	ADA APRON

INTERIOR ELEV. LEGEND

###X	CASEWORK TAG - SEE SHEET A940
X	SIGNAGE TAG - SEE SHEET A965
B##X	DOOR TAG - SEE SCHEDULE, SHEET A710
X	WINDOW TAG - SEE SCHEDULE, SHEET A720
	GYPSUM BOARD - PAINT
	WALL TILE WT-1/2 OVER CEMENTITIOUS BACKER BOARD
	WALL TILE WT-3 OVER CEMENTITIOUS BACKER BOARD
	SOLID SURFACE MATERIAL OVER CEMENTITIOUS BACKER BOARD
	FIBER REINFORCED PLASTIC (FRP) WALL PROTECTION OVER GYPSUM BOARD
	PAINTED MDO PLYWOOD

INTERIOR ELEV. GEN. NOTES

A. GENERAL CONTRACTOR TO PROVIDE STRUCTURAL SUPPORT, BACKING AND/OR METAL REINFORCEMENT IN STUD WALLS AT ALL CASEWORK, CABINETS, SHELVING, EQUIPMENT ETC. REFER TO G212 & G213 FOR TYPICAL MOUNTING HEIGHTS AND ARRANGEMENTS OF COMMON SPECIALTY ITEMS INCLUDING SHOWERS AND TOILET ROOMS.

B. SEE SHEET 18/A960 FOR TYP. ACCESSORY MOUNTING

C. SEE MECHANICAL, ELECTRICAL & LOW VOLTAGE DRAWINGS FOR EXTENT AND LOCATION OF ADDITIONAL WALL MOUNTED ITEMS SUCH AS CARD READERS, THERMOSTATS, SWITCHES, OUTLETS, CLOCKS, NURSECALL LIGHTS, FIRE ALARM, ETC. LOCATE ALL OUTLETS, SWITCHES, EQUIP., RECEPTACLE BOXES & OTHER SIMILAR RELATED ITEMS FOR OWNER'S FINAL APPROVAL PRIOR TO CONDUIT/PIPE INSTALLATION.

D. CONTRACTOR TO COORDINATE LOCATION OF CONTRACTOR OR OWNER FURNISHED ITEMS.

E. REFER TO FINISH SCHEDULE AND SPECIFICATIONS FOR SPECIFIC FINISH MATERIAL.

F. ALL VERTICAL DIMENSIONS ARE FROM FINISHED FLOOR, U.N.O.

G. ALL RECESSED SPECIALTIES SHOWN ON ELEVATIONS THAT ARE LOCATED IN FIRE RATED WALLS ARE TO BE 5-SIDED WITH 5/8" TYPE 'X' GYPBOARD SIMILAR TO 3/A961

H. WHERE OUTLETS, MONITORS AND LIGHT SWITCHES ARE NOT DIMENSIONED AT A GIVEN ELEVATION, CAN BE ASSUMED TO BE SIMILAR TO THE ONE ON THE ELEVATION THAT IS DIMENSIONED. WHERE OUTLETS ARE DIMENSIONED ON AN ELEVATION THE TYPICAL FRAMING MUST BE ALTERED AND/OR STUDS HEADED OFF TO ACCOMMODATE DIMENSIONED LOCATIONS AND SHOWN.

I. ALL WALL SURFACES IN NEED OF REPAIR SHALL BE FILLED, SPACKLED AND TEXTURED TO MATCH THE EXISTING WALLS. FINISH AS SPECIFIED.

BUILT-IN CASEWORK NOTES

AA. PROVIDE BACKSPLASH AND ENDSPLASH OF MATERIAL MATCHING COUNTERTOP ON ALL COUNTERTOPS U.O.N. BACKSPLASH TO RETURN AT CABINET ENDS - SEE DETAIL OR NOTES FOR HEIGHTS.

BB. PROVIDE PLAM END PANEL WHERE COUNTERTOP ENDS WITHOUT BASE UNIT OR SUPPORTING WALL.

CC. PROVIDE "FLOATING WALL-MOUNT BRACKET" @ 32" O.C. AT ANY OPEN COUNTER WITH SPAN GREATER THAN 3'-0" WIDTH. SEE 10/A940. CONTRACTOR TO VERFIY COORDINATION OF TRADES FOR IN-WALL INSTALLATION

DD. PROVIDE (1) ADJUSTABLE SHELF AT BASE CABINETS EXCEPT SINK BASE, U.O.N.

EE. FIELD VERIFY ALL DIMENSIONS AND EQUIPMENT SIZES PRIOR TO CASEWORK FABRICATION.

FF. PROVIDE 3" DIAMETER GROMMETS AT BACK OF COUNTERTOP AS DIRECTED BY OWNER.

GG. ALL SHELVES ARE ADJUSTABLE, U.O.N.

IDENTIFICATION STAMP
DIV. OF THE STATE ARCHITECT
APP: 02-118630 INC:
REVIEWED FOR
SS ☐ FLS ☐ ACS ☑
DATE: 04/13/2021

OFFICE OF THE STATE FIRE MARSHAL
APPROVED FIRE AND PANIC ONLY
Approval of this plan does not authorize or approve any omission or deviation from applicable regulations. Final approval is subject to field inspection. One set of approved plans shall be available on the project site at all times.
PERMIT NO.: 20-N-2332-CP
REVIEWED BY: LITO CATAYLO, OSFM
DATE: 4/1/2021

DGS
GENERAL SERVICES
Department of General Services
State of California
Real Estate Services Division
Project Management & Development Branch
707 Third Street, Suite 4-105
West Sacramento, California 95605

NM&R
NICHOLS MELBURG & ROSSETTO
ARCHITECTS + ENGINEERS
300 Knollcrest Drive
Redding, CA. 96002
(530) 222-3300 (530) 222-3538 FAX
http://www.nmrdesign.com

Copyright © 2020
All ideas, designs, arrangements and plans indicated or represented by this drawing are owned by, and the property of, NICHOLS, MELBURG and ROSSETTO and were created, evolved and developed for use on, and in conjunction with, the specified project. None of such ideas, designs, arrangements or plans shall be used by, or disclosed to any person, firm or corporation for any purpose whatsoever without the written permission of NICHOLS, MELBURG and ROSSETTO.

LICENSE STAMPS

LICENSED ARCHITECT
KYLE MATTI
C 27504
REN. 10/31/21
STATE OF CALIFORNIA

CONSULTANT

DRAWING STATUS
CONSTRUCTION DOCUMENTS

ISSUE

No.	Date	Description
1	10/20/2020	INITIAL PLAN REVIEW
2	01/22/2021	AGENCY RESUBMITTAL
3	03/22/2021	AGENCY RESUBMITTAL

If drawing is not 30" x 42" it is a reduced print

PROJECT
RESIDENTIAL CENTER, UKIAH: REPLACEMENT OF EXISTING RESIDENTIAL CENTER
440 EAST HILL ROAD
WILLITS, CALIFORNIA 95490
MENDOCINO COUNTY
CALIFORNIA CONSERVATION CORP

Supervisor	Designed	Drawn
KJM	DMH	CD

DSA Application No.
02-118630

SHEET TITLE
WAREHOUSE BLDG.
INTERIOR ELEVATIONS

DGS Project Number: 000000000001826
NMR Project Number: 18-6456

Reference North: NORTH

Sheet Scale: As indicated

Sheet Number: A501W

ISSUE DATE
July 9, 2021

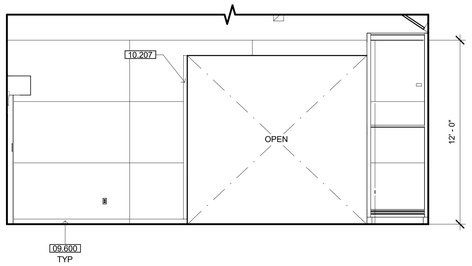

1 W116 WAREHOUSE - NORTH
1/4" = 1'-0"

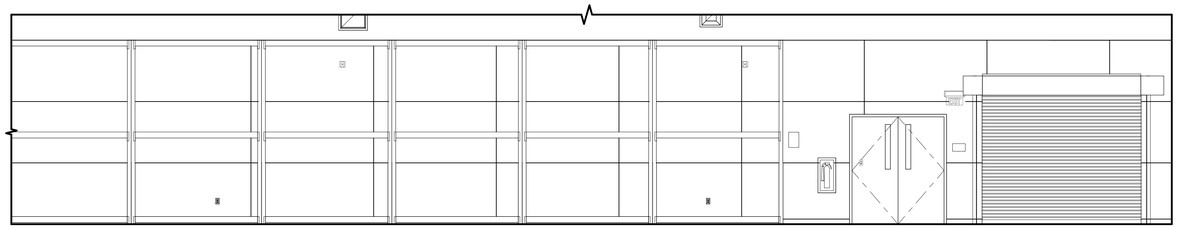

2 W 116 WAREHOUSE - WEST
1/4" = 1'-0"

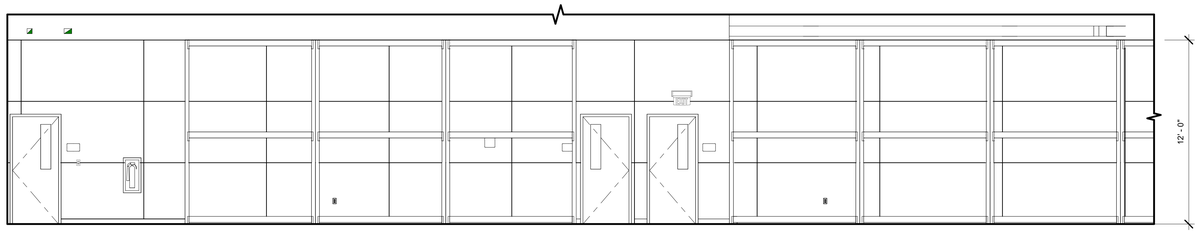

3 W116 WAREHOUSE - WEST
1/4" = 1'-0"

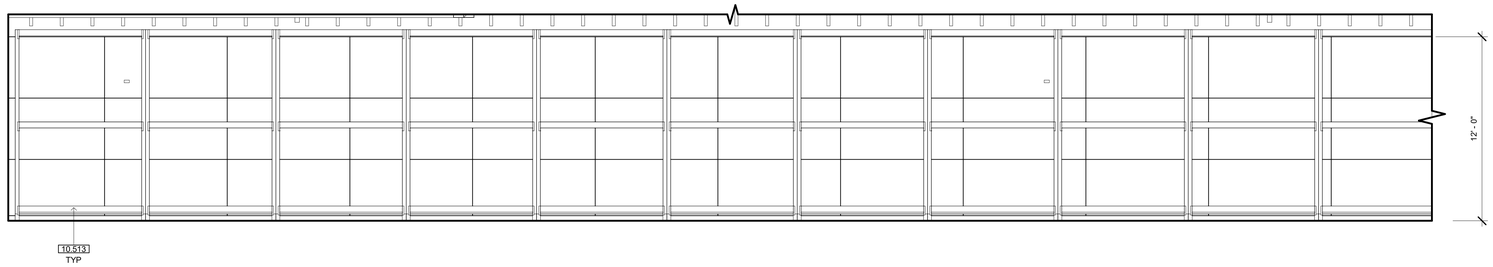

4 W116 WAREHOUSE - EAST
1/4" = 1'-0"

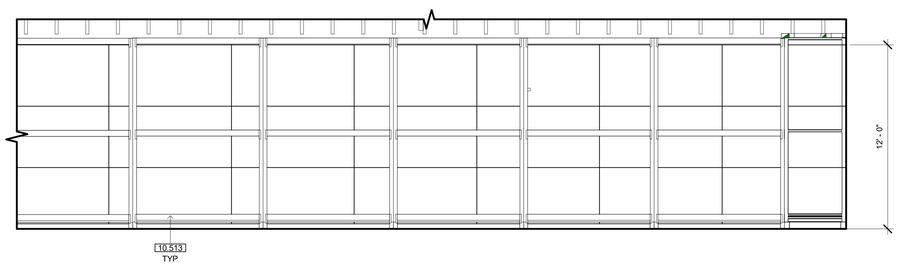

5 W116 WAREHOUSE - EAST 2
1/4" = 1'-0"

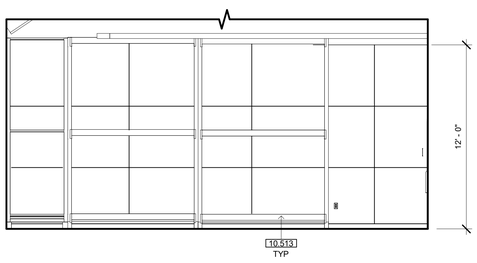

6 W116 WAREHOUSE - SOUTH 2
1/4" = 1'-0"

KEYNOTES

09.600	BASE-SEE FINISH SCHEDULE
10.207	CORNER GUARD - SEE FINISH SCHEDULE
10.513	4-TIER STEEL FREESTANDING SHELVING UNIT, 102X96X44" 2000 LBS. PER SHELF CAPACITY

INTERIOR ELEV. LEGEND

###X	CASEWORK TAG - SEE SHEET A940
X	SIGNAGE TAG - SEE SHEET A965
B##X	DOOR TAG - SEE SCHEDULE, SHEET A710
X	WINDOW TAG - SEE SCHEDULE, SHEET A720
	GYPSUM BOARD - PAINT
	WALL TILE WT-1/2 OVER CEMENTITIOUS BACKER BOARD
	WALL TILE WT-3 OVER CEMENTITIOUS BACKER BOARD
	SOLID SURFACE MATERIAL OVER CEMENTITIOUS BACKER BOARD
	FIBER REINFORCED PLASTIC (FRP) WALL PROTECTION OVER GYPSUM BOARD
	PAINTED MDO PLYWOOD

INTERIOR ELEV. GEN. NOTES

A. GENERAL CONTRACTOR TO PROVIDE STRUCTURAL SUPPORT, BACKING AND/OR METAL REINFORCEMENT IN STUD WALLS AT ALL CASEWORK, CABINETS, SHELVING, EQUIPMENT ETC. REFER TO G212 & G213 FOR TYPICAL MOUNTING HEIGHTS AND ARRANGEMENTS OF COMMON SPECIALTY ITEMS INCLUDING SHOWERS AND TOILET ROOMS.

B. SEE SHEET 18/A960 FOR TYP. ACCESSORY MOUNTING

C. SEE MECHANICAL, ELECTRICAL & LOW VOLTAGE DRAWINGS FOR EXTENT AND LOCATION OF ADDITIONAL WALL MOUNTED ITEMS SUCH AS CARD READERS, THERMOSTATS, SWITCHES, OUTLETS, CLOCKS, NURSECALL LIGHTS, FIRE ALARM, ETC. LOCATE ALL OUTLETS, SWITCHES, EQUIP., RECEPTACLE BOXES & OTHER SIMILAR RELATED ITEMS FOR OWNER'S FINAL APPROVAL PRIOR TO CONDUIT/PIPE INSTALLATION.

D. CONTRACTOR TO COORDINATE LOCATION OF CONTRACTOR OR OWNER FURNISHED ITEMS.

E. REFER TO FINISH SCHEDULE AND SPECIFICATIONS FOR SPECIFIC FINISH MATERIAL.

F. ALL VERTICAL DIMENSIONS ARE FROM FINISHED FLOOR, U.N.O.

G. ALL RECESSED SPECIALTIES SHOWN ON ELEVATIONS THAT ARE LOCATED IN FIRE RATED WALLS ARE TO BE 5-SIDED WITH 5/8" TYPE 'X' GYPBOARD SIMILAR TO 3/A961

H. WHERE OUTLETS, MONITORS AND LIGHT SWITCHES ARE NOT DIMENSIONED AT A GIVEN ELEVATION, CAN BE ASSUMED TO BE SIMILAR TO THE ONE ON THE ELEVATION THAT IS DIMENSIONED. WHERE OUTLETS ARE DIMENSIONED ON AN ELEVATION THE TYPICAL FRAMING MUST BE ALTERED AND/OR STUDS HEADED OFF TO ACCOMMODATE DIMENSIONED LOCATIONS AND SHOWN.

I. ALL WALL SURFACES IN NEED OF REPAIR SHALL BE FILLED, SPACKLED AND TEXTURED TO MATCH THE EXISTING WALLS. FINISH AS SPECIFIED.

BUILT-IN CASEWORK NOTES

AA. PROVIDE BACKSPLASH AND ENDSPLASH OF MATERIAL MATCHING COUNTERTOP ON ALL COUNTERTOPS U.O.N. BACKSPLASH TO RETURN AT CABINET ENDS - SEE DETAIL OR NOTES FOR HEIGHTS.

BB. PROVIDE PLAM END PANEL WHERE COUNTERTOP ENDS WITHOUT BASE UNIT OR SUPPORTING WALL.

CC. PROVIDE "FLOATING WALL-MOUNT BRACKET" @ 32" O.C. AT ANY OPEN COUNTER WITH SPAN GREATER THAN 3'-0" WIDTH. SEE 10/A940. CONTRACTOR TO VERFIY COORDINATION OF TRADES FOR IN-WALL INSTALLATION

DD. PROVIDE (1) ADJUSTABLE SHELF AT BASE CABINETS EXCEPT SINK BASE, U.O.N.

EE. FIELD VERIFY ALL DIMENSIONS AND EQUIPMENT SIZES PRIOR TO CASEWORK FABRICATION.

FF. PROVIDE 3" DIAMETER GROMMETS AT BACK OF COUNTERTOP AS DIRECTED BY OWNER.

GG. ALL SHELVES ARE ADJUSTABLE, U.O.N.

IDENTIFICATION STAMP
DIV. OF THE STATE ARCHITECT
APP: 02-118630 INC:
REVIEWED FOR
SS ☐ FLS ☐ ACS ☑
DATE: 04/13/2021

OFFICE OF THE STATE FIRE MARSHAL
APPROVED FIRE AND PANIC ONLY
Approval of this plan does not authorize or approve any omission or deviation from applicable regulations. Final approval is subject to field inspection. One set of approved plans shall be available on the project site at all times.
PERMIT NO. 20-N-2332-CP
REVIEWED BY: LEO CATAYLO, OSFM
DATE: 4 / /2021

DGS GENERAL SERVICES
Department of General Services
State of California
Real Estate Services Division
Project Management & Development Branch
707 Third Street, Suite 4-105
West Sacramento, California 95605

NICHOLS MELBURG & ROSSETTO
ARCHITECTS + ENGINEERS
300 Knollcrest Drive
Redding, CA. 96002
(530) 222-3300 (530) 222-3538 FAX
http://www.nmrdesign.com

Copyright © 2020
All ideas, designs, arrangements and plans indicated or represented by this drawing are owned by, and the property of, NICHOLS, MELBURG and ROSSETTO and were created, evolved and developed for use on, and in conjunction with, the specified project. None of such ideas, designs, arrangements or plans shall be used by, or disclosed to any person, firm or corporation for any purpose whatsoever without the written permission of NICHOLS, MELBURG and ROSSETTO

LICENSE STAMPS

LICENSED ARCHITECT KYLE MATTHEW ROSSETTO C-27504 REN 10/31/21 STATE OF CALIFORNIA

CONSULTANT

DRAWING STATUS
CONSTRUCTION DOCUMENTS

ISSUE

No.	Date	Description
1	10/20/2020	INITIAL PLAN REVIEW
2	01/22/2021	AGENCY RESUBMITTAL
3	03/22/2021	AGENCY RESUBMITTAL

If drawing is not 30" x 42" it is a reduced print

PROJECT
RESIDENTIAL CENTER, UKIAH: REPLACEMENT OF EXISTING RESIDENTIAL CENTER
440 EAST HILL ROAD
WILLITS, CALIFORNIA 95490
MENDOCINO COUNTY
CALIFORNIA CONSERVATION CORP

Supervisor	Designed	Drawn
KJM	DMH	Author

DSA Application No.
02-118630

SHEET TITLE
WAREHOUSE BLDG. INTERIOR ELEVATIONS

DGS Project Number: 00000000001826
NMR Project Number: 18-6456

Reference North
Sheet Scale: As indicated
Sheet Number: A502W

ISSUE DATE
July 9, 2021

Plot Date: 3/19/2021 8:41:51 AM
File Name: BIM 360://CCC-Willits Residential Center/A_CCC-WRC-WAREHOUSE.rvt

DOOR AND FRAME SCHEDULE

	DOOR					FRAME			DETAIL						
	SIZE														
NUMBER	OPENING WIDTH	HEIGHT	DOOR TYPE	DOOR MATERIAL	DOOR FINISH	FRAME TYPE	FRAME MATERIAL	FRAME FINISH	HEAD	JAMB	SILL	FIRE RATING	HARDWARE GROUP	CARD READER	REMARKS
ADMINISTRATION BUILDING															
A101A	3' - 0"	8' - 0"	D	HM	PAINT	FR9	HM	PAINT	1/A712	13/A712	4/A712	-	4.0	•	1, 4
A101B	3' - 0"	7' - 0"	B	PLAM	PRE-FIN	FR1	HM	PAINT	6/A712	7/A712	--	-	17.0	•	1
A102A	3' - 0"	7' - 0"	G	PLAM	PRE-FIN	FR1	HM	PAINT	6/A712	7/A712	--	-	17.1	•	3
A103A	3' - 0"	7' - 0"	B	PLAM	PRE-FIN	FR1	HM	PAINT	6/A712	7/A712	--	-	22.0	-	
A104A	3' - 0"	8' - 0"	D	HM	PAINT	FR1	HM	PAINT	1/A712	2/A712 & 7/A713	4/A712	-	6.0	•	1, 4
A105A	3' - 0"	7' - 0"	A	PLAM	PRE-FIN	FR1	HM	PAINT	6/A712	7/A712	--	-	16.0	•	1
A106A	3' - 0"	7' - 0"	A	PLAM	PRE-FIN	FR1	HM	PAINT	6/A712	7/A712	--	-	16.0	•	1
A107A	3' - 0"	7' - 0"	A	PLAM	PRE-FIN	FR1	HM	PAINT	6/A712	7/A712	--	-	16.0	•	1
A108A	3' - 0"	7' - 0"	C	PLAM	PRE-FIN	FR1	HM	PAINT	6/A712	7/A712	--	-	22.0	-	6
A109A	3' - 0"	7' - 0"	A	PLAM	PRE-FIN	FR1	HM	PAINT	6/A712	7/A712	--	-	26.0	-	
A110A	6' - 0"	8' - 0"	G	HM	PAINT	FR10	HM	PAINT	1/A712	2/A712	3/A712	-	8.0	•	1
A111A	3' - 0"	7' - 0"	A	PLAM	PRE-FIN	FR1	HM	PAINT	6/A712	7/A712	--	-	29.0	-	2, 4
A112A	3' - 0"	7' - 0"	A	PLAM	PRE-FIN	FR1	HM	PAINT	6/A712	7/A712	--	-	29.0	-	2, 4
A113A	3' - 0"	7' - 0"	A	PLAM	PRE-FIN	FR1	HM	PAINT	6/A712	7/A712	--	-	16.0	•	1
A114A	3' - 0"	7' - 0"	A	PLAM	PRE-FIN	FR1	HM	PAINT	6/A712	7/A712	--	-	16.0	•	1
A115A	3' - 0"	7' - 0"	A	PLAM	PRE-FIN	FR1	HM	PAINT	6/A712	7/A712	--	-	16.0	•	1
A116A	3' - 0"	7' - 0"	A	PLAM	PRE-FIN	FR1	HM	PAINT	6/A712	7/A712	--	-	16.0	•	1
A117A	4' - 0"	7' - 0"	--	--	--	FR1	HM	PAINT	9/A712	9/A712	--	-		-	5
A118A	3' - 0"	7' - 0"	A	PLAM	PRE-FIN	FR1	HM	PAINT	6/A712	7/A712	--	-	16.0	•	1
A120A	3' - 0"	7' - 0"	A	HM	PAINT	FR1	HM	PAINT	1/A712	2/A712	3/A712	-	6.0	•	1
COMET BUILDING															
C101A	3' - 0"	8' - 0"	D	HM	PAINT	FR1	HM	PAINT	1/A712	2/A712 & 7/A713	4/A712	-	6.0	•	1, 4
C105A	3' - 0"	7' - 0"	A	PLAM	PRE-FIN	FR1	HM	PAINT	6/A712	7/A712	-	-	30.0	-	4
C110A	3' - 0"	7' - 0"	A	PLAM	PRE-FIN	FR1	HM	PAINT	6/A712	7/A712	-	-	16.0	•	1
C111A	3' - 0"	7' - 0"	G	HM	PAINT	FR1	HM	PAINT	1/A712	2/A712	3/A712	-	6.0	•	1
C112A	3' - 0"	7' - 0"	A	PLAM	PRE-FIN	FR1	HM	PAINT	6/A712	7/A712	-	-	16.0	•	1
C113A	3' - 0"	7' - 0"	G	HM	PAINT	FR1	HM	PAINT	1/A712	2/A712	3/A712	-	6.0	•	1
C114A	3' - 0"	7' - 0"	A	PLAM	PRE-FIN	FR1	HM	PAINT	6/A712	7/A712	-	-	30.0	-	4
C119A	3' - 0"	8' - 0"	D	HM	PAINT	FR1	HM	PAINT	1/A712	2/A712 & 7/A713	4/A712	-	6.0	•	1, 4
EDUCATION BUILDING															
E101A	3' - 0"	8' - 0"	D	HM	PAINT	FR7	HM	PAINT	1/A712	2/A712 & 13/A712 & 7/A713	4/A712	--	3.0	•	1, 4
E101B	3' - 0"	8' - 0"	D	HM	PAINT	FR6	HM	PAINT	1/A712	2/A712 & 13/A712 & 7/A713	4/A712	--	4.0	•	1, 4
E102A	6' - 0"	7' - 0"	A	PLAM	PRE-FIN	FR10	HM	PAINT	6/A712	7/A712	--	--	24.0	-	-
E103A	3' - 0"	7' - 0"	A	PLAM	PRE-FIN	FR12	HM	PAINT	6/A712	7/A712 & 14/A721	--	--	17.0	•	1
E103B	3' - 0"	8' - 0"	A	HM	PAINT	FR1	HM	PAINT	1/A712	2/A712	4/A712	--	6.0	•	1
E104A	3' - 0"	7' - 0"	A	PLAM	PRE-FIN	FR11	HM	PAINT	6/A712	7/A712 & 14/A721	--	--	17.0	•	1
E105A	6' - 0"	7' - 0"	A	PLAM	PRE-FIN	FR10	HM	PAINT	6/A712	7/A712	--	--	24.0	-	-
E106A	3' - 0"	7' - 0"	A	PLAM	PRE-FIN	FR1	HM	PAINT	6/A712	7/A712	--	--	16.1	•	1
E107A	3' - 0"	7' - 0"	A	PLAM	PRE-FIN	FR11	HM	PAINT	6/A712	7/A712 & 14/A721	--	--	17.0	•	1
E108A	6' - 0"	7' - 0"	A	PLAM	PRE-FIN	FR10	HM	PAINT	6/A712	7/A712	--	--	24.0	-	-
E110A	3' - 0"	7' - 0"	A	PLAM	PRE-FIN	FR1	HM	PAINT	6/A712	7/A712	--	--	16.0	•	1
E111A	3' - 0"	7' - 0"	A	PLAM	PRE-FIN	FR1	HM	PAINT	6/A712	7/A712	--	--	16.0	•	1
E112A	3' - 0"	7' - 0"	A	PLAM	PRE-FIN	FR2	HM	PAINT	6/A712	7/A712 & 14/A721	--	--	16.0	•	1
E113A	3' - 0"	7' - 0"	C	PLAM	PRE-FIN	FR1	HM	PAINT	6/A712	7/A712	--	--	17.0	•	-
E114A	3' - 0"	7' - 0"	A	PLAM	PRE-FIN	FR1	HM	PAINT	6/A712	7/A712	--	--	16.1	•	1
E115A	3' - 0"	7' - 0"	A	PLAM	PRE-FIN	FR1	HM	PAINT	6/A712	7/A712	--	--	28.1	-	-
E117A	3' - 0"	8' - 0"	A	HM	PAINT	FR1	HM	PAINT	1/A712	2/A712	3/A712	--	6.0	•	1
E118A	3' - 0"	7' - 0"	A	PLAM	PRE-FIN	FR1	HM	PAINT	6/A712	7/A712	--	--	28.1	-	-
E120A	3' - 0"	8' - 0"	G	HM	PAINT	FR1	HM	PAINT	1/A712	2/A712	3/A712	--	6.0	•	1
E121A	3' - 0"	7' - 0"	C	PLAM	PRE-FIN	FR1	HM	PAINT	6/A712	7/A712	--	--	17.0	•	-
E123A	3' - 0"	7' - 0"	A	PLAM	PRE-FIN	FR2	HM	PAINT	6/A712	7/A712 & 14/A721	--	--	16.0	•	1
E124A	3' - 0"	7' - 0"	A	PLAM	PRE-FIN	FR1	HM	PAINT	6/A712	7/A712	--	--	16.1	•	1
E125A	3' - 0"	7' - 0"	A	PLAM	PRE-FIN	FR1	HM	PAINT	6/A712	7/A712	--	--	29.0	-	2, 4
E126B	3' - 0"	7' - 0"	A	PLAM	PRE-FIN	FR1	HM	PAINT	6/A712	7/A712	--	--	16.0	•	1
E127A	3' - 0"	7' - 0"	A	PLAM	PRE-FIN	FR1	HM	PAINT	6/A712	7/A712	--	--	16.1	•	1
HOUSING MEN 1															
HM101A	3' - 0"	8' - 0"	D	HM	PAINT	FR1	HM	PAINT	1/A712	2/A712	4/A712	--	6.0	•	1,4
HM101B	3' - 0"	8' - 0"	D	HM	PAINT	FR1	HM	PAINT	1/A712	2/A712 & 7/A713	4/A712	--	13.0	•	1,4
HM102A	3' - 0"	7' - 0"	A	PLAM	PRE-FIN	FR1	HM	PAINT	6/A712	7/A712	--	20 MIN	17.0	•	1,4
HM103A	3' - 0"	7' - 0"	A	PLAM	PRE-FIN	FR1	HM	PAINT	6/A712	7/A712	--	20 MIN	17.0	•	1,4
HM104A	3' - 0"	7' - 0"	A	PLAM	PRE-FIN	FR1	HM	PAINT	6/A712	7/A712	--	20 MIN	17.0	•	1,4
HM105A	3' - 0"	8' - 0"	G	HM	PAINT	FR1	HM	PAINT	1/A712	2/A712	3/A712	--	6.0	•	1
HM106A	3' - 0"	7' - 0"	A	PLAM	PRE-FIN	FR1	HM	PAINT	6/A712	7/A712	--	--	29.0	-	2,4
HM107A	3' - 0"	7' - 0"	A	PLAM	PRE-FIN	FR1	HM	PAINT	6/A712	7/A712	--	20 MIN	17.0	•	1,4
HM108A	3' - 0"	7' - 0"	A	PLAM	PRE-FIN	FR1	HM	PAINT	6/A712	7/A712	--	--	29.0	-	-
HM109A	3' - 0"	8' - 0"	G	HM	PAINT	FR1	HM	PAINT	1/A712	2/A712	3/A712	--	6.0	•	1
HM110A	3' - 0"	7' - 0"	A	PLAM	PRE-FIN	FR1	HM	PAINT	6/A712	7/A712	--	20 MIN	30.0	-	4
HM115A	3' - 0"	7' - 0"	A	PLAM	PRE-FIN	FR1	HM	PAINT	6/A712	7/A712	--	20 MIN	17.0	•	1,4
HOUSING MEN 2															
HM201A	3' - 0"	8' - 0"	D	HM	PAINT	FR1	HM	PAINT	1/A712	2/A712 & 7/A713	4/A712	--	6.0	•	1,4
HM201B	3' - 0"	8' - 0"	D	HM	PAINT	FR1	HM	PAINT	1/A712	2/A712 & 7/A713	4/A712	--	13.0	•	1,4
HM202A	3' - 0"	7' - 0"	A	PLAM	PRE-FIN	FR1	HM	PAINT	6/A712	7/A712	--	20 MIN	17.0	•	1,4
HM203A	3' - 0"	7' - 0"	A	PLAM	PRE-FIN	FR1	HM	PAINT	6/A712	7/A712	--	20 MIN	17.0	•	1,4
HM204A	3' - 0"	7' - 0"	A	PLAM	PRE-FIN	FR1	HM	PAINT	6/A712	7/A712	--	20 MIN	17.0	•	1,4
HM205A	3' - 0"	8' - 0"	G	HM	PAINT	FR1	HM	PAINT	1/A712	2/A712	3/A712	--	6.0	•	1
HM206A	3' - 0"	7' - 0"	A	PLAM	PRE-FIN	FR1	HM	PAINT	6/A712	7/A712	--	20 MIN	29.0	-	2,4
HM207A	3' - 0"	7' - 0"	A	PLAM	PRE-FIN	FR1	HM	PAINT	6/A712	7/A712	--	20 MIN	17.0	•	4
HM208A	3' - 0"	7' - 0"	A	PLAM	PRE-FIN	FR1	HM	PAINT	6/A712	7/A712	--	--	29.0	-	-
HM209A	3' - 0"	8' - 0"	G	HM	PAINT	FR1	HM	PAINT	1/A712	2/A712	3/A712	--	6.0	•	1
HM210A	3' - 0"	7' - 0"	A	PLAM	PRE-FIN	FR1	HM	PAINT	6/A712	7/A712	--	20 MIN	30.0	-	4
HM215A	3' - 0"	7' - 0"	A	PLAM	PRE-FIN	FR1	HM	PAINT	6/A712	7/A712	--	20 MIN	17.0	•	1,4
HOUSING MEN 3															
HM301A	3' - 0"	8' - 0"	D	HM	PAINT	FR1	HM	PAINT	1/A712	2/A712 & 7/A713	4/A712	--	6.0	•	1,4
HM301B	3' - 0"	8' - 0"	D	HM	PAINT	FR1	HM	PAINT	1/A712	2/A712 & 7/A713	4/A712	--	13.0	•	1,4
HM302A	3' - 0"	7' - 0"	A	PLAM	PRE-FIN	FR1	HM	PAINT	6/A712	7/A712	--	20 MIN	17.0	•	1,4
HM303A	3' - 0"	7' - 0"	A	PLAM	PRE-FIN	FR1	HM	PAINT	6/A712	7/A712	--	20 MIN	17.0	•	1,4
HM304A	3' - 0"	7' - 0"	A	PLAM	PRE-FIN	FR1	HM	PAINT	6/A712	7/A712	--	20 MIN	17.0	•	1,4
HM305A	3' - 0"	8' - 0"	G	HM	PAINT	FR1	HM	PAINT	1/A712	2/A712	3/A712	--	6.0	•	1
HM306A	3' - 0"	7' - 0"	A	PLAM	PRE-FIN	FR1	HM	PAINT	6/A712	7/A712	--	--	29.0	-	2,4
HM307A	3' - 0"	7' - 0"	A	PLAM	PRE-FIN	FR1	HM	PAINT	6/A712	7/A712	--	20 MIN	17.0	•	4
HM308A	3' - 0"	7' - 0"	A	PLAM	PRE-FIN	FR1	HM	PAINT	6/A712	7/A712	--	--	29.0	-	-
HM309A	3' - 0"	8' - 0"	G	HM	PAINT	FR1	HM	PAINT	1/A712	2/A712	3/A712	--	6.0	•	1
HM310A	3' - 0"	7' - 0"	A	PLAM	PRE-FIN	FR1	HM	PAINT	6/A712	7/A712	--	20 MIN	30.0	-	4
HM315A	3' - 0"	7' - 0"	A	PLAM	PRE-FIN	FR1	HM	PAINT	6/A712	7/A712	--	20 MIN	17.0	•	1,4
HOUSING WOMEN 4															
HW401A	3' - 0"	8' - 0"	D	HM	PAINT	FR1	HM	PAINT	1/A712	2/A712 & 7/A713	4/A712	--	6.0	•	1,4
HW401B	3' - 0"	8' - 0"	D	HM	PAINT	FR1	HM	PAINT	1/A712	2/A712 & 7/A713	4/A712	--	6.0	•	1,4
HW402A	3' - 0"	7' - 0"	A	PLAM	PRE-FIN	FR1	HM	PAINT	6/A712	7/A712	--	20 MIN	17.0	•	1,4
HW403A	3' - 0"	7' - 0"	A	PLAM	PRE-FIN	FR1	HM	PAINT	6/A712	7/A712	--	20 MIN	17.0	•	1,4
HW404A	3' - 0"	7' - 0"	A	PLAM	PRE-FIN	FR1	HM	PAINT	6/A712	7/A712	--	20 MIN	17.0	•	1,4
HW405A	3' - 0"	8' - 0"	G	HM	PAINT	FR1	HM	PAINT	1/A712	2/A712	3/A712	--	6.0	•	1
HW406A	3' - 0"	7' - 0"	A	PLAM	PRE-FIN	FR1	HM	PAINT	6/A712	7/A712	--	--	29.0	-	2,4
HW407A	3' - 0"	7' - 0"	A	PLAM	PRE-FIN	FR1	HM	PAINT	6/A712	7/A712	--	20 MIN	17.0	•	1,4
HW408A	3' - 0"	7' - 0"	A	PLAM	PRE-FIN	FR1	HM	PAINT	6/A712	7/A712	--	--	29.0	-	-
HW409A	3' - 0"	8' - 0"	G	HM	PAINT	FR1	HM	PAINT	1/A712	2/A712	3/A712	--	6.0	•	1
HW410A	3' - 0"	7' - 0"	A	PLAM	PRE-FIN	FR1	HM	PAINT	6/A712	7/A712	--	20 MIN	30.0	-	4
HW415A	3' - 0"	7' - 0"	A	PLAM	PRE-FIN	FR1	HM	PAINT	6/A712	7/A712	--	20 MIN	17.0	•	1,4
HOUSING WOMEN 5															
HW501A	3' - 0"	8' - 0"	D	HM	PAINT	FR1	HM	PAINT	1/A712	2/A712 & 7/A713	4/A712	--	6.0	•	1,4
HW501B	3' - 0"	8' - 0"	D	HM	PAINT	FR1	HM	PAINT	1/A712	2/A712 & 7/A713	4/A712	--	6.0	•	1,4
HW502A	3' - 0"	7' - 0"	A	PLAM	PRE-FIN	FR1	HM	PAINT	6/A712	7/A712	--	20 MIN	17.0	•	1,4
HW503A	3' - 0"	7' - 0"	A	PLAM	PRE-FIN	FR1	HM	PAINT	6/A712	7/A712	--	20 MIN	17.0	•	1,4
HW504A	3' - 0"	7' - 0"	A	PLAM	PRE-FIN	FR1	HM	PAINT	6/A712	7/A712	--	20 MIN	17.0	•	1,4
HW505A	3' - 0"	8' - 0"	G	HM	PAINT	FR1	HM	PAINT	1/A712	2/A712	3/A712	--	6.0	•	1
HW506A	3' - 0"	7' - 0"	A	PLAM	PRE-FIN	FR1	HM	PAINT	6/A712	7/A712	--	--	29.0	-	2,4
HW507A	3' - 0"	7' - 0"	A	PLAM	PRE-FIN	FR1	HM	PAINT	6/A712	7/A712	--	20 MIN	17.0	•	4
HW508A	3' - 0"	7' - 0"	A	PLAM	PRE-FIN	FR1	HM	PAINT	6/A712	7/A712	--	--	29.0	-	-
HW509A	3' - 0"	8' - 0"	G	HM	PAINT	FR1	HM	PAINT	1/A712	2/A712	3/A712	--	6.0	•	1
HW510A	3' - 0"	7' - 0"	A	PLAM	PRE-FIN	FR1	HM	PAINT	6/A712	7/A712	--	20 MIN	30.0	-	4
HW515A	3' - 0"	7' - 0"	A	PLAM	PRE-FIN	FR1	HM	PAINT	6/A712	7/A712	--	20 MIN	17.0	•	1,4
HOUSING WOMEN 6															
HW601A	3' - 0"	8' - 0"	D	HM	PAINT	FR1	HM	PAINT	1/A712	2/A712 & 7/A713	4/A712	--	6.0	•	1,4
HW601B	3' - 0"	8' - 0"	D	HM	PAINT	FR1	HM	PAINT	1/A712	2/A712 & 7/A713	4/A712	--	6.0	•	1,4
HW602A	3' - 0"	7' - 0"	A	PLAM	PRE-FIN	FR1	HM	PAINT	6/A712	7/A712	--	20 MIN	17.0	•	1,4
HW603A	3' - 0"	7' - 0"	A	PLAM	PRE-FIN	FR1	HM	PAINT	6/A712	7/A712	--	20 MIN	17.0	•	1,4
HW604A	3' - 0"	7' - 0"	A	PLAM	PRE-FIN	FR1	HM	PAINT	6/A712	7/A712	--	20 MIN	17.0	•	1,4
HW605A	3' - 0"	8' - 0"	G	HM	PAINT	FR1	HM	PAINT	1/A712	2/A712	3/A712	--	6.0	•	1
HW606A	3' - 0"	7' - 0"	A	PLAM	PRE-FIN	FR1	HM	PAINT	6/A712	7/A712	--	--	29.0	-	2,4
HW607A	3' - 0"	7' - 0"	A	PLAM	PRE-FIN	FR1	HM	PAINT	6/A712	7/A712	--	20 MIN	17.0	•	4
HW608A	3' - 0"	7' - 0"	A	PLAM	PRE-FIN	FR1	HM	PAINT	6/A712	7/A712	--	--	29.0	-	-
HW609A	3' - 0"	8' - 0"	G	HM	PAINT	FR1	HM	PAINT	1/A712	2/A712	3/A712	--	6.0	•	1
HW610A	3' - 0"	7' - 0"	A	PLAM	PRE-FIN	FR1	HM	PAINT	6/A712	7/A712	--	20 MIN	30.0	-	4
HW615A	3' - 0"	7' - 0"	A	PLAM	PRE-FIN	FR1	HM	PAINT	6/A712	7/A712	--	20 MIN	17.0	•	1,4

Plot Date: 3/19/2021 11:19:52 AM
File Name: BIM 360://CCC Willits Residential Center/A_CCC-WRC-COMMON.rvt

DOOR AND FRAME SCHEDULE

	DOOR					FRAME			DETAIL						
	SIZE														
NUMBER	OPENING WIDTH	HEIGHT	DOOR TYPE	DOOR MATERIAL	DOOR FINISH	FRAME TYPE	FRAME MATERIAL	FRAME FINISH	HEAD	JAMB	SILL	FIRE RATING	HARDWARE GROUP	CARD READER	REMARKS
MULTI-PURPOSE BUILDING															
M101A	6' - 0"	8' - 0"	D	HM	PAINT	FR14	HM	PAINT	1/A712	13/A712	3/A712	--	2.0	•	1, 4
M101B	6' - 0"	8' - 0"	D	HM	PAINT	FR15	HM	PAINT	1/A712	13/A712	3/A712	--	1.0	•	1, 4
M101C	6' - 0"	8' - 0"	D	PLAM	PRE-FIN	FR10	HM	PAINT	6/A712	7/A712	--	--	14.0	-	4
M102A	6' - 0"	8' - 0"	D	PLAM	PRE-FIN	FR10	HM	PAINT	6/A712	7/A712	--	--	14.0	-	1, 4
M102B	6' - 0"	8' - 0"	D	HM	PAINT	FR10	HM	PAINT	1/A712	2/A712 & 7/A713	3/A712	--	2.0	•	1, 4
M103A	3' - 0"	7' - 0"	A	PLAM	PRE-FIN	FR1	HM	PAINT	6/A712	7/A712	--	--	17.1	•	1
M104A	3' - 0"	7' - 0"	A	PLAM	PRE-FIN	FR1	HM	PAINT	6/A712	7/A712	--	--	28.1	-	-
M104B	3' - 0"	7' - 0"	A	PLAM	PRE-FIN	FR1	HM	PAINT	6/A712	7/A712	--	--	28.1	-	-
M110A	3' - 0"	7' - 0"	A	PLAM	PRE-FIN	FR1	HM	PAINT	6/A712	7/A712	--	--	28.1	-	-
M115A	3' - 0"	7' - 0"	A	PLAM	PRE-FIN	FR1	HM	PAINT	6/A712	7/A712	--	--	28.1	-	-
M116A	6' - 0"	8' - 0"	G	HM	PAINT	FR10	HM	PAINT	1/A712	2/A712	3/A712	--	5.0	•	1
M117A	3' - 0"	8' - 0"	G	HM	PAINT	FR1	HM	-	1/A712	2/A712	3/A712	--	10.0	•	1
M119A	6' - 0"	8' - 0"	A	PLAM	PRE-FIN	FR10	HM	PAINT	6/A712	7/A712	--	--	15.0	•	1
M119B	6' - 0"	8' - 0"	D	HM	PAINT	FR10	HM	PAINT	1/A712	2/A712	4/A712	--	1.0	•	1, 4
M119C	6' - 0"	8' - 0"	D	HM	PAINT	FR10	HM	PAINT	1/A712	2/A712	4/A712	--	1.0	•	1, 4
M121A	5' - 0"	7' - 0"	H	ALUM		-	PRE-FIN	-	4/A713	2/A713	4/A713	--	32.0	-	1, 12
M121B	5' - 0"	7' - 0"	H	ALUM		-	PRE-FIN	-	4/A713	2/A713	4/A713	--	32.0	-	1, 12
M122A	3' - 0"	7' - 0"	A	PLAM	PRE-FIN	FR1	HM	PAINT	6/A712	7/A712	--	--	17.0	•	1, 4
M123A	3' - 0"	8' - 0"	A	HM	PAINT	FR2	HM	PAINT	1/A712	2/A712 & 13/A712 & 7/A713	3/A712	--	6.0	•	1, 4
M124A	3' - 0"	7' - 0"	A	PLAM	PRE-FIN	FR1	HM	PAINT	6/A712	7/A712	--	--	16.0	•	1
M126A	6' - 0"	5' - 0"	E	SS		-	-	-	9/A713	15/A712	9/A713	--	32.0	-	1, 9
M127A	3' - 0"	8' - 0"	A	HM	PAINT	FR1	HM	PAINT	1/A712	2/A712	3/A712	--	6.0	•	1, 4
M127B	8' - 0"	8' - 0"	F	STEEL		-	-	-	10/A712	11/A712	12/A712	--	32.0	-	1, 8
M128A	3' - 0"	7' - 0"	A	PLAM	PRE-FIN	FR1	HM	PAINT	6/A712	7/A712	--	--	28.0	-	-
M130A	3' - 0"	7' - 0"	A	PLAM	PRE-FIN	FR1	HM	PAINT	6/A712	7/A712	--	--	18.0	-	-
M131A	3' - 0"	7' - 0"	A	PLAM	PRE-FIN	FR1	HM	PAINT	6/A712	7/A712	--	--	29.0	-	2, 4
M132A	3' - 0"	7' - 0"	A	PLAM	PRE-FIN	FR1	HM	PAINT	6/A712	7/A712	--	--	27.0	•	1
M132B	6' - 0"	8' - 0"	G	HM	PAINT	FR10	HM	PAINT	1/A712	2/A712	3/A712	--	11.0	•	1
M133A	20' - 0"	9' - 0"	F	SS		-	-	-	10/A712	11/A712	--	--	32.0	-	1, 13
M201A	2' - 6"	3' - 0"	A	HM	PAINT	FR5	HM	PAINT	15/A713	14/A713	13/A713	--	32.0		
RECREATION BUILDING															
R101A	3' - 0"	8' - 0"	D	HM	PAINT	FR12	HM	PAINT	1/A712	2/A712 & 13/A712 & 7/A713	4/A712	--	6.0	•	1, 4
R101B	3' - 0"	8' - 0"	D	HM	PAINT	FR11	HM	PAINT	1/A712	2/A712 & 13/A712 & 7/A713	4/A712	--	6.0	•	1, 4
R102A	3' - 0"	7' - 0"	C	PLAM	PRE-FIN	FR1	HM	PAINT	6/A712	7/A712	--	--	17.0	•	1
R103A	3' - 0"	8' - 0"	D	HM	PAINT	FR12	HM	PAINT	1/A712	2/A712 & 13/A712	4/A712	--	6.0	•	1, 4
R104A	3' - 0"	7' - 0"	B	PLAM	PRE-FIN	FR1	HM	PAINT	6/A712	7/A712	--	--	28.0	-	-
R105A	3' - 0"	8' - 0"	D	HM	PAINT	FR11	HM	PAINT	1/A712	2/A712 & 13/A712 & 7/A713	4/A712	--	6.0	•	1, 4
R106A	3' - 0"	7' - 0"	A	PLAM	PRE-FIN	FR1	HM	PAINT	6/A712	7/A712	--	--	28.1	-	-
R108A	3' - 0"	7' - 0"	A	PLAM	PRE-FIN	FR1	HM	PAINT	6/A712	7/A712	--	--	28.1	-	-
R110A	3' - 0"	7' - 0"	C	PLAM	PRE-FIN	FR1	HM	PAINT	6/A712	7/A712	--	--	23.0	-	-
R111A	3' - 0"	7' - 0"	A	PLAM	PRE-FIN	FR1	HM	PAINT	6/A712	7/A712	--	--	16.1	•	1
R112A	3' - 0"	8' - 0"	A	HM	PAINT	FR1	HM	PAINT	1/A712	2/A712	3/A712	--	6.0	•	1
R113A	3' - 0"	7' - 0"	A	PLAM	PRE-FIN	FR1	HM	PAINT	6/A712	7/A712	--	--	29.0	-	2, 4
R114A	3' - 0"	8' - 0"	G	HM	PAINT	FR1	HM	PAINT	1/A712	2/A712	3/A712	--	6.0	•	1
R115A	3' - 0"	7' - 0"	C	PLAM	PRE-FIN	FR1	HM	PAINT	6/A712	7/A712	--	--	28.0	-	11
R116A	3' - 0"	7' - 0"	C	PLAM	PRE-FIN	FR4	HM	PAINT	6/A712	7/A712 & 14/A721	--	--	28.0	-	11
R118A	3' - 0"	7' - 0"	A	PLAM	PRE-FIN	FR1	HM	PAINT	6/A712	7/A712	--	--	17.1	•	1
R118B	4' - 0"	4' - 0"	E	SS	PRE-FIN	--	--	--	10/A713	--	10/A713	--	32.0	-	1,9
R119A	3' - 0"	7' - 0"	B	PLAM	PRE-FIN	FR1	HM	PAINT	6/A712	7/A712	--	--	28.0	-	11
R120A	3' - 0"	7' - 0"	A	PLAM	PRE-FIN	FR1	HM	PAINT	6/A712	7/A712	--	--	16.1	•	1
R121A	6' - 0"	7' - 0"	D	PLAM	PRE-FIN	FR10	HM	PAINT	6/A712	7/A712	--	--	23.0	-	-
WAREHOUSE BUILDING															
W101A	3' - 0"	8' - 0"	A	HM	PAINT	FR7	HM	PAINT	1/A712	2/A712 & 13/A712	3/A712	--	6.0	•	1, 4
W102A	3' - 0"	7' - 0"	A	HM	PAINT	FR1	HM	PAINT	6/A712	7/A712	--	--	17.1	•	1
W102B	8' - 4"	8' - 2"	F	STEEL		--	--	-	10/A712	11/A712	12/A712	--	32.0	-	1, 7
W103A	3' - 0"	7' - 0"	A	HM	PAINT	FR1	HM	PAINT	6/A712	7/A712	--	--	17.1	•	1
W103B	8' - 4"	8' - 2"	F	STEEL		--	--	--	10/A712	11/A712	12/A712	--	32.0	-	1, 7
W104A	3' - 0"	7' - 0"	A	HM	PAINT	FR1	HM	PAINT	6/A712	7/A712	--	--	17.1	•	1
W104B	8' - 4"	8' - 2"	F	STEEL		--	--	--	10/A712	11/A712	12/A712	--	32.0	-	1, 7
W105A	3' - 0"	7' - 0"	A	HM	PAINT	FR1	HM	PAINT	6/A712	7/A712	--	--	17.1	•	1
W106A	3' - 0"	7' - 0"	A	HM	PAINT	FR1	HM	PAINT	1/A712	2/A712	3/A712	--	6.0	•	1
W107A	3' - 0"	7' - 0"	A	HM	PAINT	FR1	HM	PAINT	1/A712	2/A712	3/A712	--	6.0	•	1
W108A	3' - 0"	7' - 0"	A	HM	PAINT	FR1	HM	PAINT	6/A712	7/A712	--	--	16.0	•	1
W109A	3' - 0"	7' - 0"	A	HM	PAINT	FR1	HM	PAINT	6/A712	7/A712	--	--	17.1	•	1
W109B	8' - 4"	8' - 2"	F	STEEL		--	--	--	10/A712	11/A712	12/A712	--	32.0	-	1, 7
W110A	3' - 0"	7' - 0"	A	HM	PAINT	FR1	HM	PAINT	6/A712	7/A712	--	--	17.1	•	1
W110B	8' - 4"	8' - 2"	F	STEEL		--	--	--	10/A712	11/A712	12/A712	--	32.0	-	1, 7
W111A	3' - 0"	7' - 0"	A	HM	PAINT	FR1	HM	PAINT	6/A712	7/A712	--	--	17.1	•	1
W111B	8' - 4"	8' - 2"	F	STEEL		--	--	--	10/A712	11/A712	12/A712	--	32.0	-	1, 7
W112A	3' - 0"	7' - 0"	B	HM	PAINT	FR1	HM	PAINT	1/A712	2/A712	3/A712	--	6.0	•	1
W112B	16' - 4"	10' - 0"	F	STEEL		--	--	--	10/A712	11/A712	12/A712	--	32.0	-	1, 8
W112C	16' - 4"	10' - 0"	F	STEEL		--	--	--	10/A712	11/A712	12/A712	--	32.0	-	1, 8
W113A	3' - 0"	7' - 0"	B	HM	PAINT	FR1	HM	PAINT	1/A712	2/A712	3/A712	--	6.0	•	1
W113B	10' - 4"	10' - 0"	F	STEEL		--	--	--	10/A712	11/A712	12/A712	--	32.0	-	1, 8
W113C	3' - 0"	7' - 0"	A	HM	PAINT	FR1	HM	PAINT	6/A712	7/A712	--	--	17.1	•	1
W114A	6' - 0"	7' - 0"	A	HM	PAINT	FR10	HM	PAINT	6/A712	7/A712	--	--	15.0	•	1
W115A	3' - 0"	7' - 0"	B	HM	PAINT	FR1	HM	PAINT	1/A712	2/A712 & 7/A713	3/A712	--	6.0	•	1
W115B	12' - 4"	11' - 0"	F	STEEL		--	--	--	10/A712	11/A712	12/A712	--	32.0	-	1, 8
W116A	10' - 4"	8' - 2"	F	STEEL		--	--	--	10/A712	11/A712	--	--	32.0	-	1, 8
W116B	6' - 0"	7' - 0"	B	HM	PAINT	FR10	HM	PAINT	6/A712	7/A712	--	--	15.0	•	1
W116C	3' - 0"	7' - 0"	B	HM	PAINT	FR1	HM	PAINT	6/A712	7/A712	--	--	17.0	•	1
W117A	3' - 0"	7' - 0"	B	HM	PAINT	FR1	HM	PAINT	6/A712	7/A712	--	--	17.0	•	1
W118A	3' - 0"	7' - 0"	A	HM	PAINT	FR1	HM	PAINT	6/A712	7/A712	--	--	16.1	•	1
W119A	3' - 0"	7' - 0"	A	HM	PAINT	FR1	HM	PAINT	6/A712	7/A712	--	--	29.0	-	2, 4
W120A	3' - 0"	7' - 0"	A	HM	PAINT	FR1	HM	PAINT	6/A712	7/A712	--	--	29.0	-	2, 4
W121A	3' - 0"	7' - 0"	B	HM	PAINT	FR1	HM	PAINT	6/A712	7/A712	--	--	17.0	-	1
W121B	3' - 0"	7' - 0"	B	HM	PAINT	FR1	HM	PAINT	6/A712	7/A712	--	--	17.0	•	1
W121C	4' - 0"	4' - 0"	E	SS		--	--	--	11/A713	--	11/A713	--	32.0	-	1, 9
W122A	3' - 0"	7' - 0"	B	HM	PAINT	FR1	HM	PAINT	6/A712	7/A712	--	--	17.0	•	1
W122B	3' - 0"	7' - 0"	B	HM	PAINT	FR1	HM	PAINT	6/A712	7/A712	--	--	17.0	•	1
W123A	8' - 0"	7' - 0"	G	HM	PAINT	FR10	HM	PAINT	1/A712	2/A712 & 7/A713	3/A712	--	8.0	•	1
W124A	3' - 0"	8' - 0"	A	HM	PAINT	FR3	HM	PAINT	1/A712	2/A712 & 13/A712	4/A712	--	6.0	•	1
W124B	3' - 0"	7' - 0"	B	HM	PAINT	FR1	HM	PAINT	6/A712	7/A712	--	--	17.0	•	1
W126A	3' - 0"	7' - 0"	A	HM	PAINT	FR1	HM	PAINT	1/A712	2/A712	3/A712	--	6.0	•	1
W127A	3' - 0"	7' - 0"	A	HM	PAINT	FR1	HM	PAINT	1/A712	2/A712	3/A712	--	6.0	•	1
VEHICLE WASH ENCLOSURE															
V101A	7' - 0"	7' - 10"	G	HM	PAINT	FR10	HM	PAINT	1/A060	5/A060	3/A712	-	11.0	-	
V101B	7' - 0"	7' - 10"	G	HM	PAINT	FR10	HM	PAINT	1/A060 SIM	5/A060	3/A712	-	11.0	-	

IDENTIFICATION STAMP
DIV. OF THE STATE ARCHITECT
APP: 02-118630 INC:
REVIEWED FOR
SS ☐ FLS ☐ ACS ☑
DATE: 04/13/2021

OFFICE OF THE STATE FIRE MARSHAL
APPROVED FIRE AND PANIC ONLY
Approval of this plan does not authorize or approve any omission or deviation from applicable regulations. Final approval is subject to field inspection. One set of approved plans shall be available on the project site at all times.
PERMIT NO.: 20-N-2332-CP
REVIEWED BY: LITO CATAYLO, OSFM
DATE: 4/1/2021

GENERAL SERVICES
Department of General Services
State of California
Real Estate Services Division
Project Management & Development Branch
707 Third Street, Suite 4-105
West Sacramento, California 95605

NICHOLS MELBURG & ROSSETTO
ARCHITECTS + ENGINEERS
300 Knollcrest Drive
Redding, CA. 96002
(530) 222-3300 (530) 222-3538 FAX
http://www.nmrdesign.com

Copyright © 2020
All ideas, designs, arrangements and plans indicated or represented by this drawing are owned by, and the property of, NICHOLS, MELBURG and ROSSETTO and were created, evolved and developed for use on, and in conjunction with, the specified project. None of such ideas, designs, arrangements or plans shall be used by, or disclosed to any person, firm or corporation for any purpose whatsoever without the written permission of NICHOLS, MELBURG and ROSSETTO.

LICENSE STAMPS

LICENSED ARCHITECT
KYLE MATTI
C 27504
REN. 10/31/21
STATE OF CALIFORNIA

CONSULTANT

DRAWING STATUS
CONSTRUCTION DOCUMENTS

ISSUE

No.	Date	Description
1	10/20/2020	INITIAL PLAN REVIEW
2	01/22/2021	AGENCY RESUBMITTAL
3	03/22/2021	AGENCY RESUBMITTAL

If drawing is not 30" x 42" it is a reduced print

PROJECT
RESIDENTIAL CENTER, UKIAH: REPLACEMENT OF EXISTING RESIDENTIAL CENTER

440 EAST HILL ROAD
WILLITS, CALIFORNIA 95490
MENDOCINO COUNTY
CALIFORNIA CONSERVATION CORP

Supervisor: KJM | Designed: DMH | Drawn: AMP

DSA Application No.
02-118630

SHEET TITLE
DOOR SCHEDULE

DGS Project Number: 000000000001826
NMR Project Number: 18-6456

Reference North
NORTH

Sheet Scale

Sheet Number
A710

ISSUE DATE
July 9, 2021

FRAME TYPES

SCALE: 1/4" = 1'-0"

TG = TEMPERED GLAZING

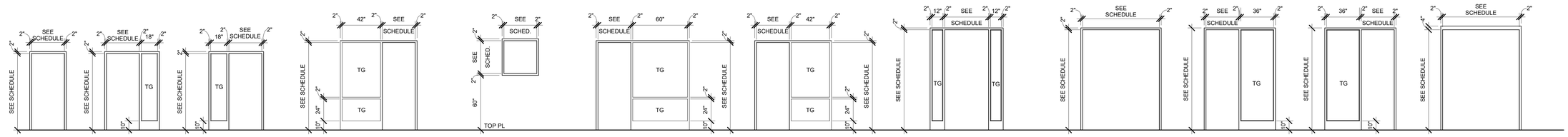

FR1 HOLLOW METAL

FR2 HOLLOW METAL SIDELITE - RIGHT TYPE 'A' GLAZING AT INT. TYPE 'B' GLAZING AT EXT.

FR3 HOLLOW METAL SIDELITE - LEFT TYPE 'B' GLAZING

FR4 HOLLOW METAL SIDELITE - LEFT TYPE 'A' GLAZING

FR5 HOLLOW METAL 4 SIDED FRAME

FR6 HOLLOW METAL SIDELITE - RIGHT TYPE 'B' GLAZING

FR7 HOLLOW METAL SIDELITE - RIGHT TYPE 'B' GLAZING

FR9 HOLLOW METAL SIDELITES BOTH SIDES TYPE 'B' GLAZING

FR10 HOLLOW METAL DOUBLE DOOR

FR11 HOLLOW METAL SIDELITE - RIGHT TYPE 'A' GLAZING

FR12 HOLLOW METAL SIDELITE - LEFT TYPE 'A' GLAZING

FR13 HOLLOW METAL DOUBLE DOOR - 4" HEAD

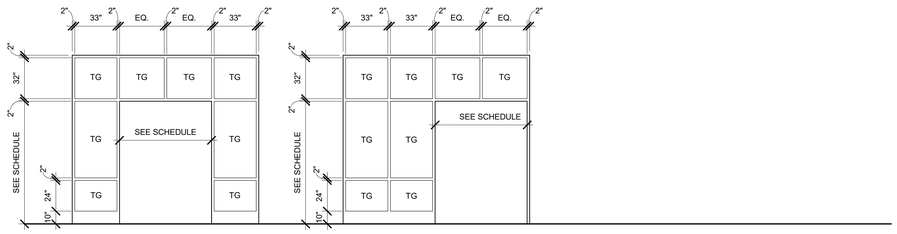

FR14 HOLLOW METAL SIDELITES BOTH SIDES TYPE 'B' GLAZING

FR15 HOLLOW METAL SIDELITES - LEFT TYPE 'B' GLAZING

DOOR TYPES

SCALE: 1/4" = 1'-0"

TG = TEMPERED GLAZING

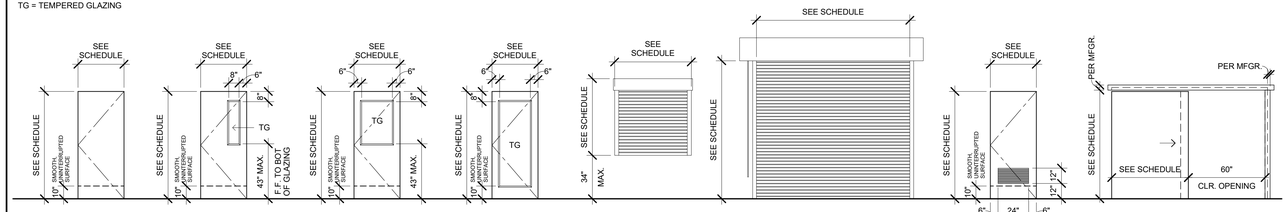

A FLUSH SLAB

B NARROW LITE TYPE 'A' GLAZING AT INT. TYPE 'B' GLAZING AT EXT.

C HALF LITE TYPE 'A' GLAZING

D FULL LITE TYPE 'A' GLAZING AT INT. TYPE 'B' GLAZING AT EXT.

E OVERHEAD COILING COUNTER DOOR

F OVERHEAD COILING DOOR

G LOUVER

H SLIDING BARN DOOR W/ TRIM

DOOR AND HARDWARE GENERAL NOTES

A. FOR SELF- CLOSING AND LATCHING DOORS, PROVIDE 12" STRIKE-SIDE BY 48" DEEP CLEAR SPACE ON SIDE OPPOSITE SWING OF DOOR (PUSH-SIDE)

B. ALL EGRESS DOORS SHALL BE READILY OPENABLE FROM THE EGRESS SIDE WITHOUT THE USE OF A KEY OR SPECIAL KNOWLEDGE OR EFFORT. THE UNLATCHING OF ANY DOOR OR LEAF SHALL NOT REQUIRE MORE THAN ONE OPERATION CBC 1010.1.9.6

C. A MAXIMUM OF 1/2" (BEVELED 1 : 2) TOTAL VERTICAL RISE IS ALLOWED AT EACH SIDE OF ALL DOORS, INCLUDING THRESHOLDS.

D. MAXIMUM DOOR OPENING EFFORT TO BE 5 POUNDS AT EXTERIOR AND INTERIOR DOORS, AND 15 POUNDS AT FIRE DOORS. CBC 11B-404.2.9

E. ALL DOORS TO BE EQUIPPED WITH SINGLE-EFFORT, NON-GRASP HARDWARE (IE, LEVER) CENTERED BETWEEN 34" AND 44" ABOVE THE FINISH FLOOR. CBC 11B-404.2.7

F. FOR DOORS WITH CLOSERS, THE SWEEP PERIOD OF THE CLOSER SHALL BE ADJUSTED SO THAT FROM AN OPEN POSITION OF 90 DEGREES, THE TIME REQUIRED TO MOVE THE DOOR TO A POSITION OF 12 DEGREES FROM THE LATCH IS 5 SECONDS MINIMUM. CBC 11B-404.2.8.1

G. AUTOMATIC- CLOSING FIRE DOOR ASSEMBLIES SHALL BE SELF-CLOSING IN ACCORDANCE WITH NFPA 80. CBC 716.2.6.4

H. PANIC AND FIRE EXIT HARDWARE SHALL COMPLY WITH CBC 1010.1.10 AND BE LISTED IN ACCORDANCE WITH UL 305.

I. CONTRACTOR TO COORDINATE DOOR CONSTRUCTION AND DOOR HARDWARE WITH ACCESS CONTROL.

J. SEE FINISH SCHEDULE LEGEND FOR FINISH SELECTION.

DOOR SCHEDULE REMARKS

SEE REMARKS COLUMN AT DOOR SCHEDULE FOR SPECIFIC DOORS TO WHICH THE FOLLOWING NOTES APPLY, TYPICAL. REFER TO DOOR HARDWARE SCHEDULE IN SPECIFICATIONS FOR ADDITIONAL INFORMATION, WHERE APPLICABLE.

1. LOCKSET
2. PRIVACY LOCK
3. LOUVER AT WOOD DOOR
4. DOOR WITH LATCH AND CLOSER
5. CASED OPENING
6. DOOR WITH 1/2" UNDERCUT FOR VENTILATION
7. ROLLING SECURITY DOOR
8. INSULATED OVERHEAD COILING DOOR
9. ROLLING COUNTER DOOR
10. DOOR AND HARDWARE BY WALK-IN UNIT MANUFACTURER
11. DOOR TO BE PROVIDED WITH ACOUSTIC SEALS
12. SPECIAL FUNCTION DOOR SLIDING / "BARN" DOOR
13. OVERHEAD COILING SECURITY SHUTTERS, FLOOR TYPE, BETWEEN JAMB MOUNTING, ELECTRIC MOTOR OPERATION

IDENTIFICATION STAMP
DIV. OF THE STATE ARCHITECT
APP: 02-118630 INC:
REVIEWED FOR
SS ☐ FLS ☐ ACS ☑
DATE: 04/13/2021

OFFICE OF THE STATE FIRE MARSHAL
APPROVED FIRE AND PANIC ONLY
Approval of this plan does not authorize or approve any omission or deviation from applicable regulations. Final approval is subject to field inspection. One set of approved plans shall be available on the project site at all times.
PERMIT NO. 2019-2332-CP
REVIEWED BY: LEO CATAYLO, OSFM
DATE: 4 / /2021

DGS GENERAL SERVICES
Department of General Services
State of California
Real Estate Services Division
Project Management & Development Branch
707 Third Street, Suite 4-105
West Sacramento, California 95605

NICHOLS MELBURG & ROSSETTO ARCHITECTS + ENGINEERS
300 Knollcrest Drive
Redding, CA. 96002
(530) 222-3300 (530) 222-3538 FAX
http://www.nmrdesign.com

Copyright © 2020
All ideas, designs, arrangements and plans indicated or represented by this drawing are owned by, and the property of, NICHOLS, MELBURG and ROSSETTO and were created, evolved and developed for use on, and in conjunction with, the specified project. None of such ideas, designs, arrangements or plans shall be used by, or disclosed to any person, firm or corporation for any purpose whatsoever without the written permission of NICHOLS, MELBURG and ROSSETTO

LICENSE STAMPS

LICENSED ARCHITECT KYLE MATTHEW ROSSETTO C-31504 REN. 10/31/21 STATE OF CALIFORNIA

CONSULTANT

DRAWING STATUS
CONSTRUCTION DOCUMENTS

ISSUE

No.	Date	Description
1	10/20/2020	INITIAL PLAN REVIEW
2	01/22/2021	AGENCY RESUBMITTAL
3	03/22/2021	AGENCY RESUBMITTAL

If drawing is not 30" x 42" it is a reduced print

PROJECT
RESIDENTIAL CENTER, UKIAH: REPLACEMENT OF EXISTING RESIDENTIAL CENTER
440 EAST HILL ROAD
WILLITS, CALIFORNIA 95490
MENDOCINO COUNTY
CALIFORNIA CONSERVATION CORP

Supervisor	Designed	Drawn
KJM	DMH	AMP

DSA Application No.
02-118630

SHEET TITLE
DOOR & FRAME TYPES

DGS Project Number: 000000000001826
NMR Project Number: 18-6456

Reference North
Sheet Scale: 1/4" = 1'-0"
Sheet Number: A711

ISSUE DATE
July 9, 2021

Plot Date: 3/22/2021 1:45:24 PM
File Name: 6884 A00 ACCA Willits Residential Center\A_CCC-WRC-COMMON.rvt

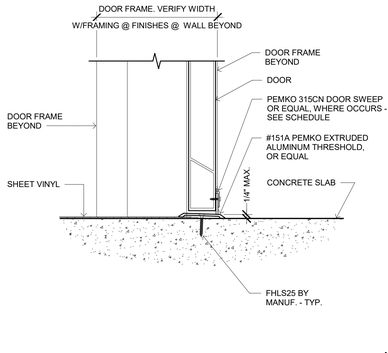

THRESHOLD AT SHEET VINYL TO CONCRETE — A712 — 17

SCALE: 3" = 1'-0"

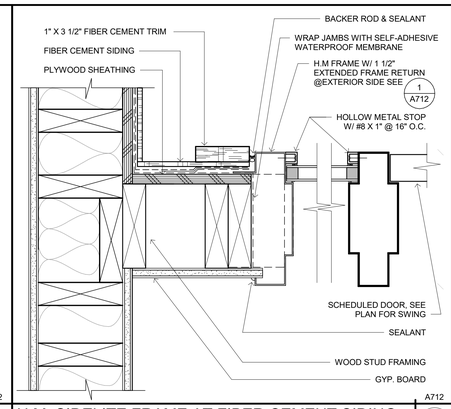

H.M. SIDELITE FRAME AT FIBER CEMENT SIDING — A712 — 13

SCALE: 3" = 1'-0"

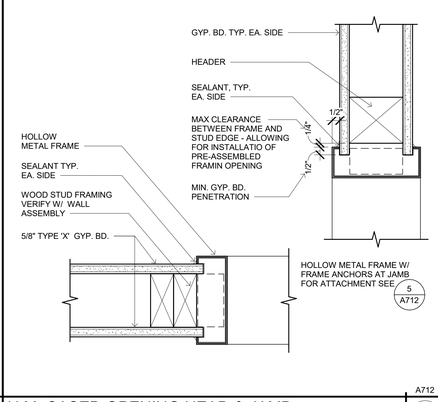

H.M. CASED OPENING HEAD & JAMB — A712 — 9

SCALE: 3" = 1'-0"

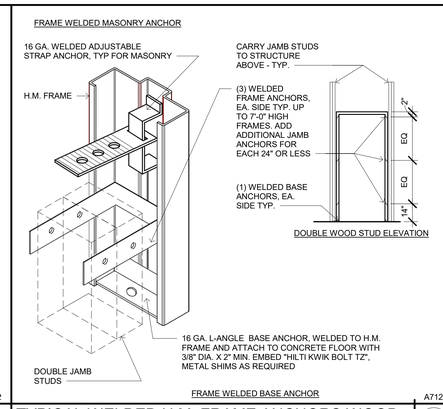

TYPICAL WELDED H.M. FRAME ANCHORS WOOD STUD AND MASONRY — A712 — 5

SCALE: 3" = 1'-0"

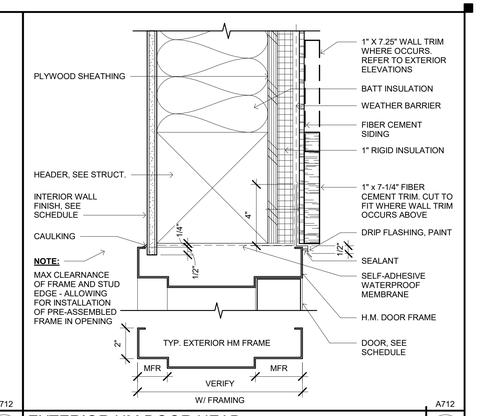

EXTERIOR HM DOOR HEAD — A712 — 1

SCALE: 3" = 1'-0"

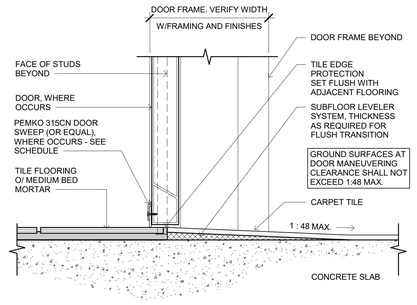

THRESHOLD AT RESILIENT TILE TO TILE — A712 — 18

SCALE: 3" = 1'-0"

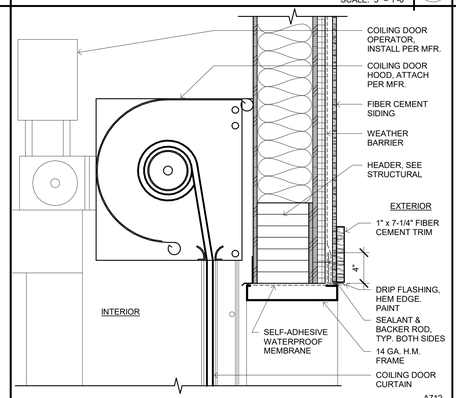

OVERHEAD COOLING DOOR HEAD — A712 — 10

SCALE: 1 1/2" = 1'-0"

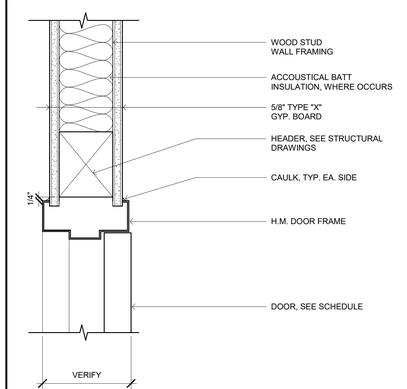

INTERIOR HM DOOR HEAD — A712 — 6

SCALE: 3" = 1'-0"

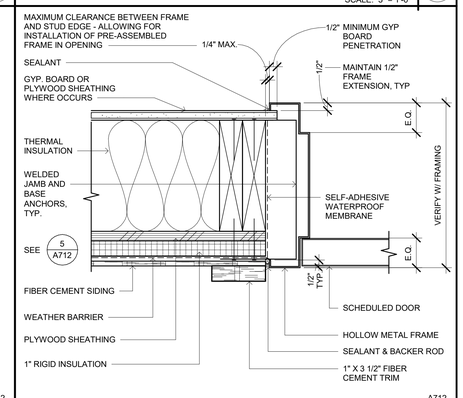

EXTERIOR HM DOOR JAMB — A712 — 2

SCALE: 3" = 1'-0"

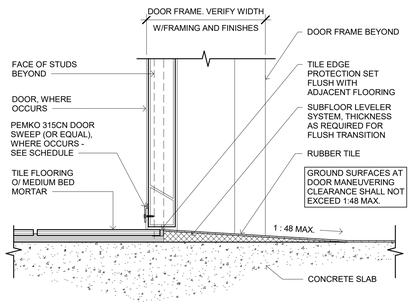

THRESHOLD AT RUBBER FLOOR TO RESILIENT TILE — A712 — 19

SCALE: 3" = 1'-0"

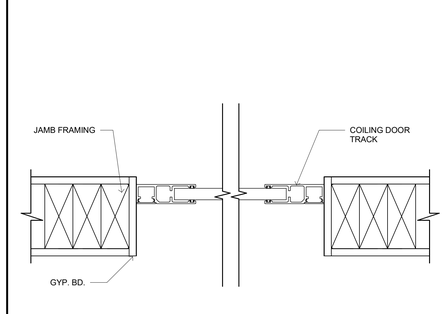

OVRHD COILING DR BTWN JMB - JAMB — A712 — 15

SCALE: 3" = 1'-0"

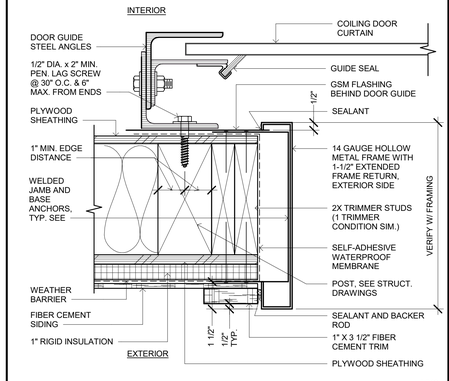

OVERHEAD COILING DOOR JAMB — A712 — 11

SCALE: 3" = 1'-0"

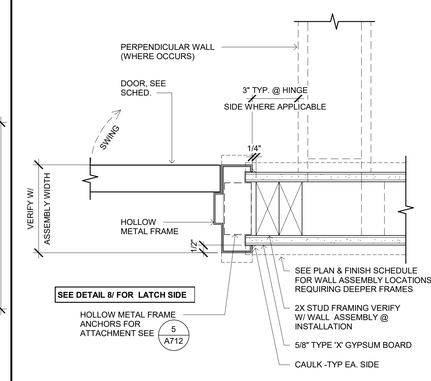

INTERIOR HM DOOR HINGE SIDE — A712 — 7

SCALE: 3" = 1'-0"

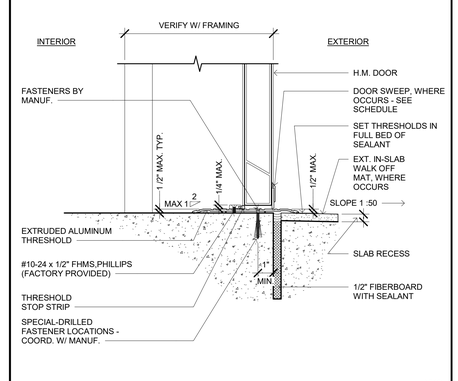

THRESHOLD AT EXTERIOR DOOR CONCRETE TO CONCRETE — A712 — 3

SCALE: 3" = 1'-0"

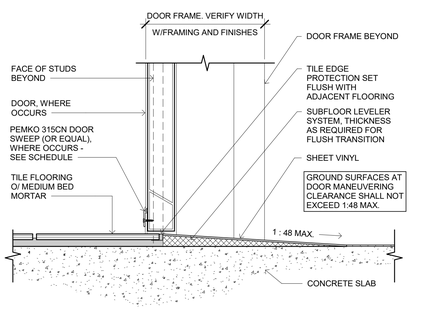

THRESHOLD AT CONCRETE TO TILE — A712 — 20

SCALE: 3" = 1'-0"

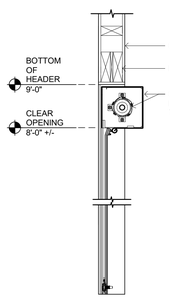

OVRHD COILING DR BTWN JMB - SECTION — A712 — 16

SCALE: 1" = 1'-0"

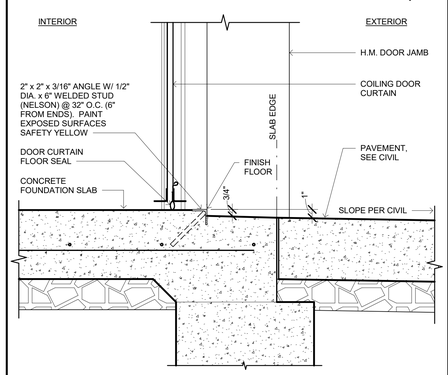

OVERHEAD COILING DOOR SILL — A712 — 12

SCALE: 1 1/2" = 1'-0"

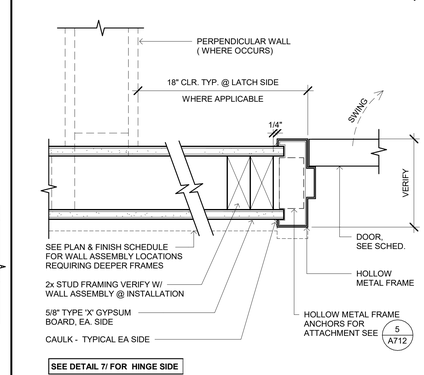

H.M. DOOR LATCH SIDE — A712 — 8

SCALE: 3" = 1'-0"

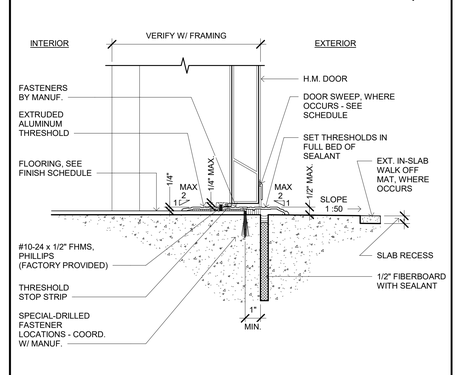

THRESHOLD AT EXTERIOR DOOR CONCRETE TO CARPET/RUBBER FLOOR — A712 — 4

SCALE: 3" = 1'-0"

Plot Date: 3/30/2021 11:19:58 AM
File Name: 3130_300 //CCC WRC Residential Center/A_CCC-WRC-COMMON.rvt

IDENTIFICATION STAMP
DIV. OF THE STATE ARCHITECT
APP: 02-118630 INC:
REVIEWED FOR
SS ☐ FLS ☐ ACS ☑
DATE: 04/13/2021

OFFICE OF THE STATE FIRE MARSHAL
APPROVED FIRE AND PANIC ONLY
Approval of this plan does not authorize or approve any omission or deviation from applicable regulations. Final approval is subject to field inspection. One set of approved plans shall be available on the project site at all times.
PERMIT NO. 20-N-2332-CP
REVIEWED BY: LEO CATAYLO, OSFM
DATE: 4 / /2021

DGS GENERAL SERVICES
Department of General Services
State of California
Real Estate Services Division
Project Management & Development Branch
707 Third Street, Suite 4-105
West Sacramento, California 95605

NICHOLS MELBURG & ROSSETTO ARCHITECTS + ENGINEERS
300 Knollcrest Drive
Redding, CA. 96002
(530) 222-3300 (530) 222-3538 FAX
http://www.nmrdesign.com

Copyright © 2020
All ideas, designs, arrangements and plans indicated or represented by this drawing are owned by, and the property of, NICHOLS, MELBURG and ROSSETTO and were created, evolved and developed for use on, and in conjunction with, the specified project. None of such ideas, designs, arrangements or plans shall be used by, or disclosed to any person, firm or corporation for any purpose whatsoever without the written permission of NICHOLS, MELBURG and ROSSETTO

LICENSE STAMPS

LICENSED ARCHITECT KYLE MATTHEW ROSSETTO C-21504 REN. 10/31/21 STATE OF CALIFORNIA

CONSULTANT

DRAWING STATUS
CONSTRUCTION DOCUMENTS

ISSUE

No.	Date	Description
1	10/20/2020	INITIAL PLAN REVIEW
2	01/22/2021	AGENCY RESUBMITTAL
3	03/22/2021	AGENCY RESUBMITTAL

If drawing is not 30" x 42" it is a reduced print

PROJECT
RESIDENTIAL CENTER, UKIAH: REPLACEMENT OF EXISTING RESIDENTIAL CENTER
440 EAST HILL ROAD
WILLITS, CALIFORNIA 95490
MENDOCINO COUNTY
CALIFORNIA CONSERVATION CORP

Supervisor	Designed	Drawn
KJM	DMH	Author

DSA Application No.
02-118630

SHEET TITLE
DOOR & FRAME DETAILS

DGS Project Number
000000000001826

NMR Project Number
18-6456

Reference North

Sheet Scale
As indicated

Sheet Number
A712

ISSUE DATE
July 9, 2021

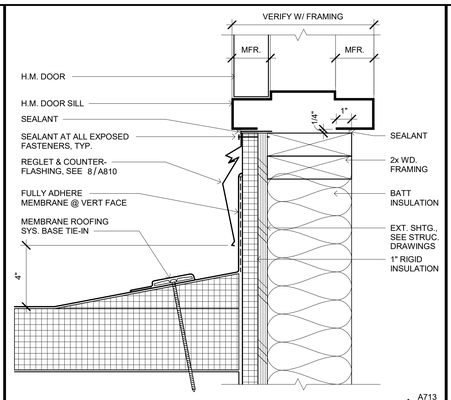

A713

HM DOOR SILL AT MEMBRANE ROOF

13

SCALE: 3" = 1'-0"

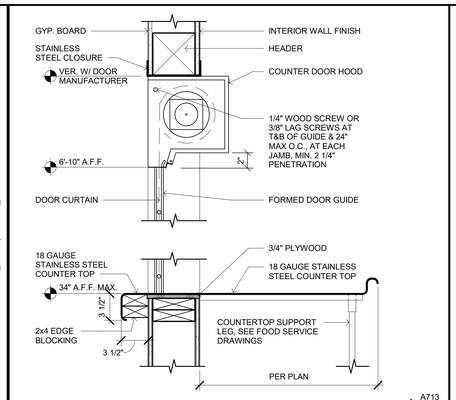

A713

INTERIOR COUNTER DOOR HEAD AT DISHWASHING (MULTI-PURPOSE BLDG)

9

SCALE: 1 1/2" = 1'-0"

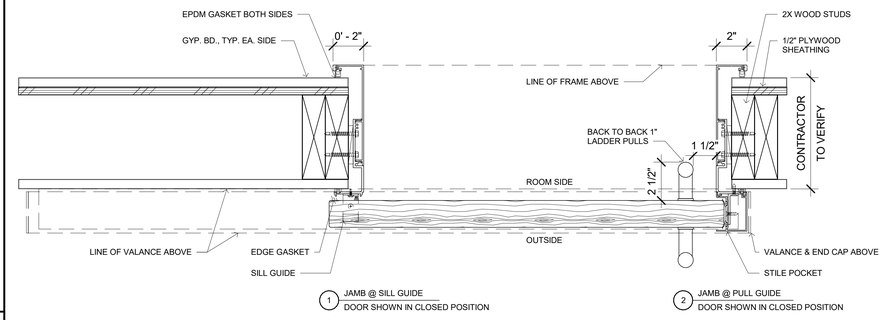

1 JAMB @ SILL GUIDE — DOOR SHOWN IN CLOSED POSITION

2 JAMB @ PULL GUIDE — DOOR SHOWN IN CLOSED POSITION

A713

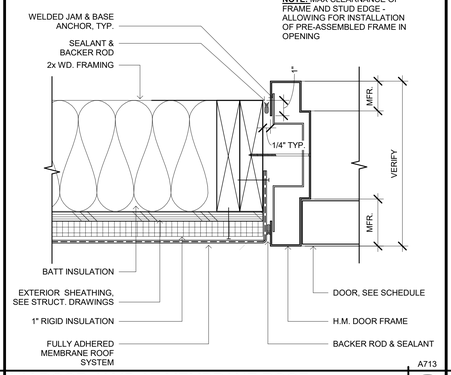

A713

HM DOOR JAMB AT MEMBRANE ROOF

14

SCALE: 3" = 1'-0"

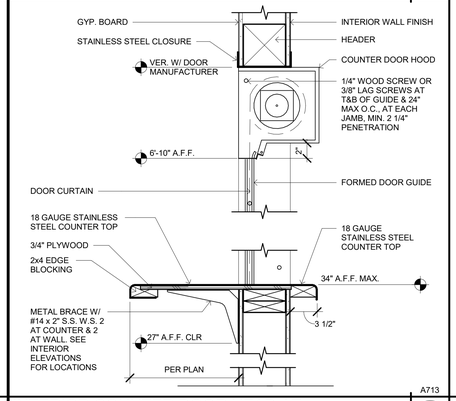

A713

INTERIOR COUNTER DOOR HEAD AT RECREATION BLDG

10

SCALE: 1 1/2" = 1'-0"

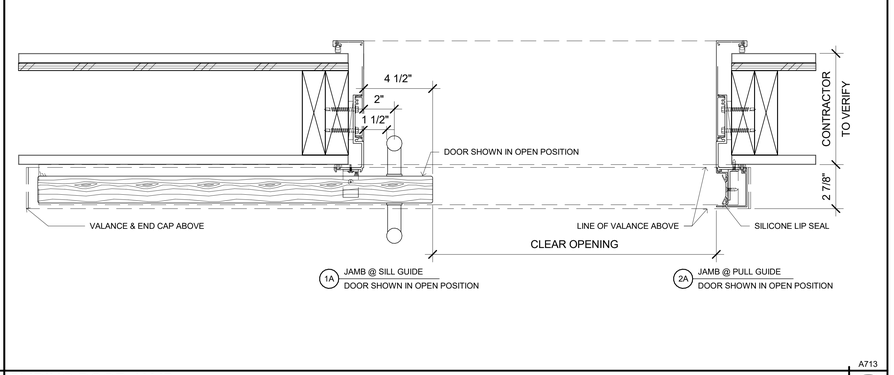

1A JAMB @ SILL GUIDE — DOOR SHOWN IN OPEN POSITION

2A JAMB @ PULL GUIDE — DOOR SHOWN IN OPEN POSITION

A713

SLIDING DOOR JAMB

2

SCALE: 3" = 1'-0"

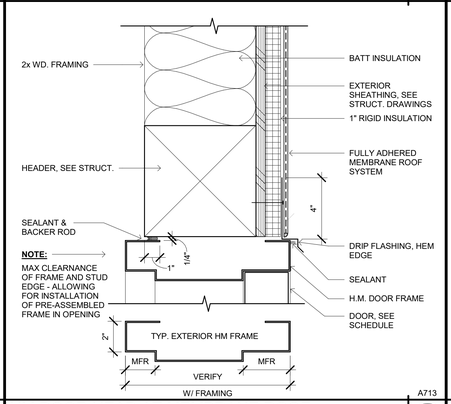

A713

HM DOOR HEAD AT MEMBRANE ROOF

15

SCALE: 3" = 1'-0"

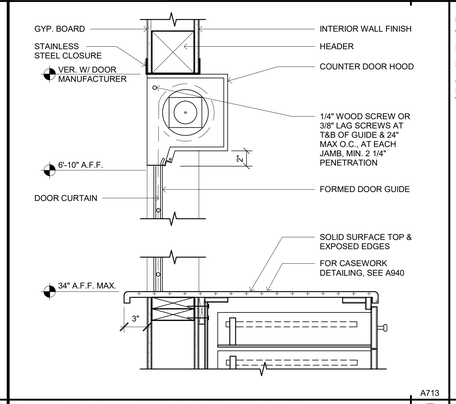

A713

INTERIOR COUNTER DOOR HEAD AT WAREHOUSE BLDG

11

SCALE: 1 1/2" = 1'-0"

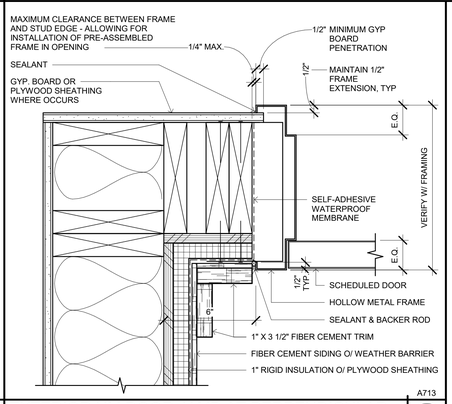

A713

EXTERIOR HM DOOR JAMB AT PERPENDICULAR WALL

7

SCALE: 3" = 1'-0"

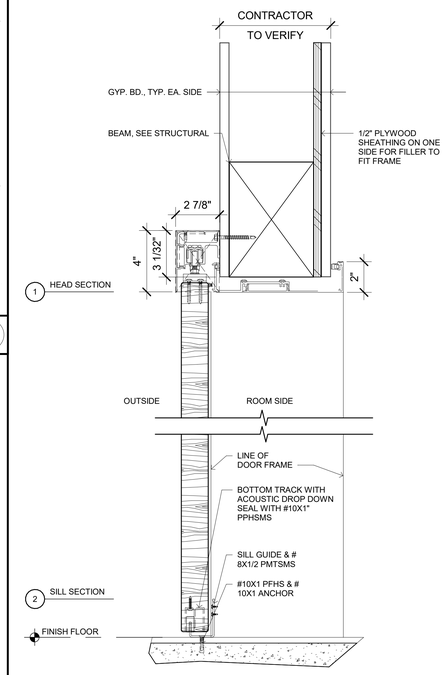

A713

SLIDING DOOR HEAD & SILL

4

SCALE: 3" = 1'-0"

IDENTIFICATION STAMP
DIV. OF THE STATE ARCHITECT
APP: 02-118630 INC:
REVIEWED FOR
SS ☐ FLS ☐ ACS ☑
DATE: 04/13/2021

OFFICE OF THE STATE FIRE MARSHAL
APPROVED FIRE AND PANIC ONLY
Approval of this plan does not authorize or approve any omission or deviation from applicable regulations. Final approval is subject to field inspection. One set of approved plans shall be available on the project site at all times.
PERMIT NO. 20 N 2332-CP
REVIEWED BY: LEO CATAYLO, OSFM
DATE: 4 / /2021

GENERAL SERVICES
Department of General Services
State of California
Real Estate Services Division
Project Management & Development Branch
707 Third Street, Suite 4-105
West Sacramento, California 95605

NICHOLS MELBURG & ROSSETTO ARCHITECTS + ENGINEERS
300 Knollcrest Drive
Redding, CA. 96002
(530) 222-3300 (530) 222-3538 FAX
http://www.nmrdesign.com

Copyright © 2020
All ideas, designs, arrangements and plans indicated or represented by this drawing are owned by, and the property of, NICHOLS, MELBURG and ROSSETTO and were created, evolved and developed for use on, and in conjunction with, the specified project. None of such ideas, designs, arrangements or plans shall be used by, or disclosed to any person, firm or corporation for any purpose whatsoever without the written permission of NICHOLS, MELBURG and ROSSETTO.

LICENSE STAMPS

LICENSED ARCHITECT KYLE MATTY C-32504 REN. 10/31/21 STATE OF CALIFORNIA

CONSULTANT

DRAWING STATUS
CONSTRUCTION DOCUMENTS

ISSUE

No.	Date	Description
1	10/20/2020	INITIAL PLAN REVIEW
2	01/22/2021	AGENCY RESUBMITTAL
3	03/22/2021	AGENCY RESUBMITTAL

If drawing is not 30" x 42" it is a reduced print

PROJECT
RESIDENTIAL CENTER, UKIAH: REPLACEMENT OF EXISTING RESIDENTIAL CENTER
440 EAST HILL ROAD
WILLITS, CALIFORNIA 95490
MENDOCINO COUNTY
CALIFORNIA CONSERVATION CORP

Supervisor	Designed	Drawn
KJM	DMH	Author

DSA Application No.
02-118630

SHEET TITLE
DOOR & FRAME DETAILS

DGS Project Number: 0000000000001826
NMR Project Number: 18-6456

Reference North: NORTH
Sheet Scale: As indicated
Sheet Number: A713

ISSUE DATE
July 9, 2021

Plot Date: 3/19/2021 11:20:01 AM
File Name: BIM 360://CCC-Willits Residential Center/A_CCC-WRC-COMMON.rvt

EXTERIOR WINDOW TYPES

SCALE: 1/4" = 1'-0"

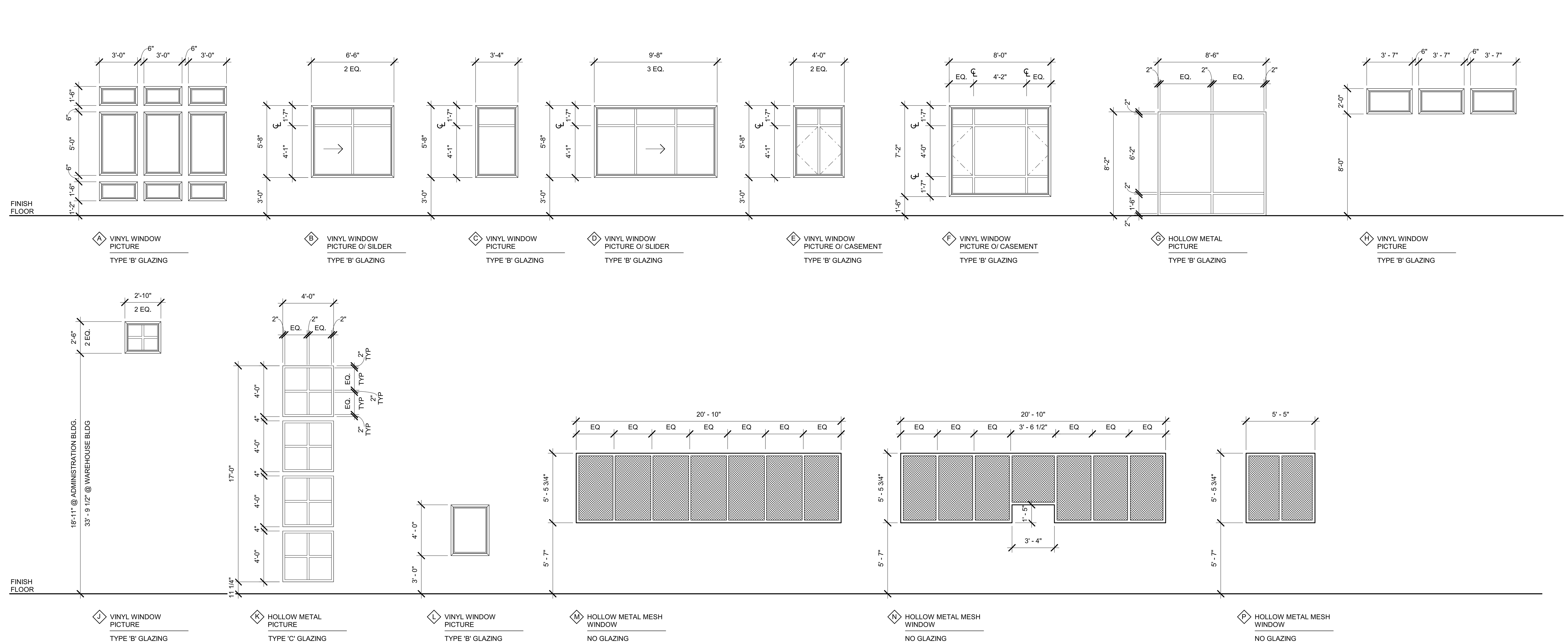

LOUVER TYPES

SCALE: 1/4" = 1'-0"

NOTE: SEE MECHANICAL DRAWINGS FOR MINIMUM LOUVER OPENING AREA. UNUSED PORTION OF LOUVER SHALL BE BLANKED OFF WITH GALVANIZED SHEET METAL ON INTERIOR FACE.

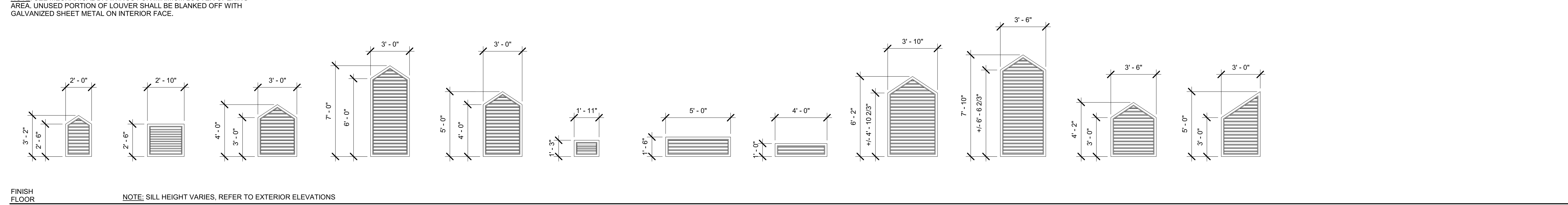

- L1 LOUVER WITH 2.13 SQ. FT. NET FREE AREA
- L2 LOUVER WITH 2.47 SQ. FT. NET FREE AREA
- L3 LOUVER WITH 4.56 SQ. FT. NET FREE AREA
- L4 LOUVER WITH 8.41 SQ. FT. NET FREE AREA
- L5 LOUVER WITH 5.85 SQ. FT. NET FREE AREA
- L6 LOUVER WITH 0.6 SQ. FT. NET FREE AREA
- L7 LOUVER WITH 2.42 SQ. FT. NET FREE AREA
- L8 LOUVER WITH 1.0 SQ. FT. NET FREE AREA
- L9 LOUVER WITH 9.73 SQ. FT. NET FREE AREA
- L10 LOUVER WITH 12.56 SQ. FT. NET FREE AREA
- L11 LOUVER WITH 5.71 SQ. FT. NET FREE AREA
- L12 LOUVER WITH 9.02 SQ. FT. NET FREE AREA

INTERIOR WINDOW TYPES

SCALE: 1/4" = 1'-0"

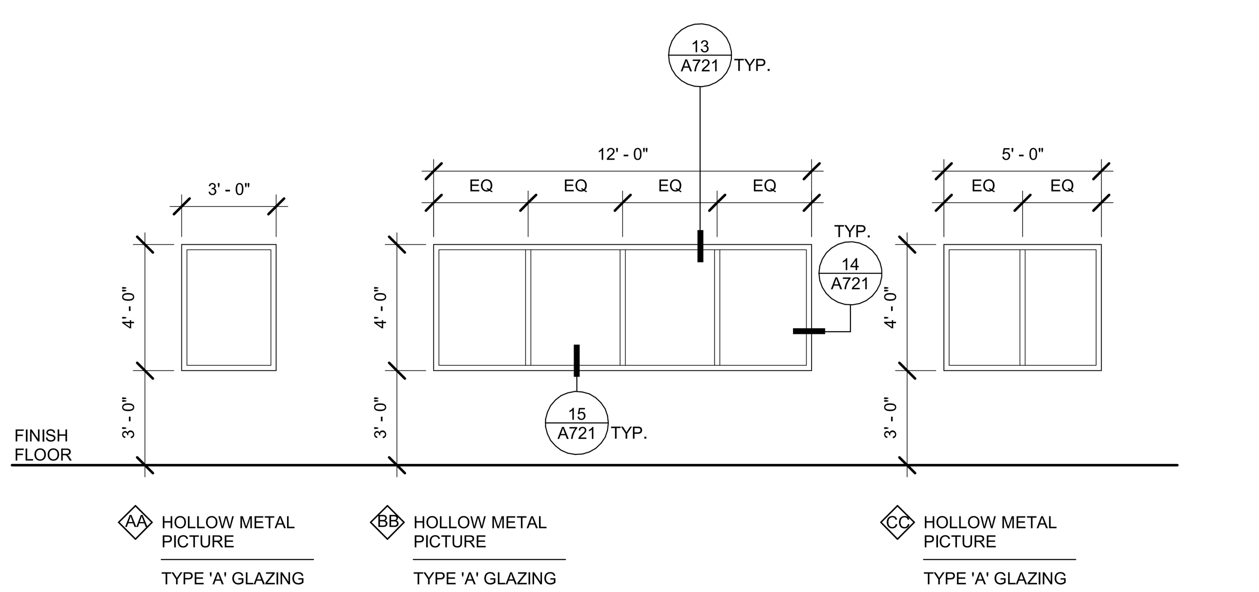

VINYL WINDOW GENERAL NOTES

1. GLAZING AT ALL VINYL WINDOW UNITS SHALL BE PER SPECIFICATIONS SECTION 08 80 00.
2. ALL EXTERIOR WINDOW UNITS SHALL HAVE A MAXIMUM U-VALUE OF 0.30, WITH GLAZING HAVING A MAXIMUM SOLAR HEAT GAIN COEFFICIENT OF 0.25. REFER TO SPECIFICATIONS SECTIONS 08 53 13 AND 08 80 00.
3. EXTERIOR WINDOWS AND GLAZED OPENINGS WITHIN EXTERIOR DOORS SHALL COMPLY WITH CBC 708A.2 BY BEING CONSTRUCTED OF MULTIPANE GLAZING WITH A MINIMUM OF ONE TEMPERED PANE MEETING THE REQUIREMENTS OF SECTION 2406 SAFETY GLAZING. ALTERNATIVELY, THE UNITS MAY HAVE A FIRE-RESISTANCE RATING OF NOT LESS THAN 20 MINUTES WHEN TESTED ACCORDING TO NFPA 257, OR BE TESTED TO MEET THE PERFORMANCE REQUIREMENTS OF SFM STANDARD 12-7A-2.
4. GLAZING IN THE FOLLOWING LOCATIONS SHALL BE OF SAFETY GLAZING MATERIAL IN ACCORDANCE WITH CBC SECTION 2406.4:
   - A. GLAZING IN SWINGING DOORS
   - B. GLAZING IN FIXED AND SLIDING PANELS OF SLIDING DOOR ASSEMBLIES AND PANELS IN SLIDING AND BIFOLD CLOSET DOOR ASSEMBLIES.
   - C. GLAZING IN STORM DOORS
   - D. GLAZING IN UNFRAMED SWINGING DOORS
   - E. GLAZING IN DOORS AND ENCLOSURES FOR BATHTUBS AND SHOWERS. GLAZING IN ANY PORTION OF A BUILDING WALL ENCLOSING THESE COMPARTMENTS WHERE THE BOTTOM EXPOSED EDGE OF THE GLAZING IS LESS THAN 60" ABOVE A STANDING SURFACE.
   - F. GLAZING IN AN INDIVIDUAL FIXED OR OPERABLE PANEL ADJACENT TO A DOOR WHERE THE NEAREST EXPOSED EDGE OF THE GLAZING IS WITHIN A 24" ARC OF EITHER VERTICAL EDGE OF THE DOOR IN A CLOSED POSITION AND WHERE THE BOTTOM EXPOSED EDGE OF THE GLAZING IS LESS THAN 60" ABOVE THE WALKING SURFACE.
   - G. GLAZING IN AN INDIVIDUAL FIXED OR OPERABLE PANEL, OTHER THAN IN THOSE LOCATIONS DESCRIBED IN PRECEDING ITEMS E & F, WHICH MEETS ALL OF THE FOLLOWING CONDITIONS:
     1. EXPOSED AREA OF AN INDIVIDUAL PANE GREATER THAN 9 SQ. FT.;
     2. EXPOSED BOTTOM EDGE LESS THAN 18" ABOVE THE FLOOR;
     3. EXPOSED TOP EDGE GREATER THAN 36" ABOVE THE FLOOR; AND
     4. ONE OR MORE WALKING SURFACE(S) WITHIN 36" HORIZONTALLY OF THE PLANE OF THE GLAZING.
5. DIMENSIONS SHOWN ON WINDOW SCHEDULE ARE NOMINAL DIMENSIONS. FIELD VERIFY ALL DIMENSIONS AND SUBMIT SHOP DRAWINGS FOR ARCHITECT'S REVIEW. IF THERE ARE ANY INCONSISTENCIES BETWEEN THE WINDOW SCHEDULE AND THE DOOR SCHEDULE, IT IS THE CONTRACTOR'S RESPONSIBILITY TO BRING THESE TO THE ARCHITECT'S ATTENTION PRIOR TO CONSTRUCTION.
6. WINDOW TREATMENTS - PROVIDE WINDOW TREATMENTS FOR THE FULL WIDTH AND HEIGHT AT INTERIOR OF EACH WINDOW. SEE SPECIFICATION SECTION 12 20 00 FOR TREATMENT TYPE.

OPERABLE WINDOW NOTES

1. OPERABLE PARTS SHALL BE OPERABLE WITH ONE HAND AND SHALL NOT REQUIRE TIGHT GRASPING, PINCHING, OR TWISTING OF THE WRIST. THE FORCE REQUIRED TO ACTIVATE OPERABLE PARTS SHALL BE 5 LBS. MAX.
2. WHERE OPERABLE WINDOWS ARE PROVIDED, AT LEAST ONE WINDOW SHALL COMPLY WITH CBC 11B-229.1 & 11B-309. OPERABLE SHANDLE/LOCKS SHALL NOT BE INSTALLED MORE THAN 48" AFF. MILGARD SMART TOUCH LOCK OR EQUAL TO BE SUPPLIED.

   *AWNING WINDOWS ARE LOCATED TO NOT PROTRUDE INTO AN PEDESTRIAN PATH OF TRAVEL WHEN OPEN

GLAZING LEGEND

TG = TEMPERED GLAZING

GLAZING

SEE SPECIFICATION SECTION 08 80 00 FOR ADDITIONAL GLAZING INFORMATION

TYPE 'A' GLAZING - TEMPERED SAFETY GLASS

TYPE 'B' GLAZING - INSULATED GLAZING SYSTEM (OUTSIDE LITE: LOW E COATING; INSIDE LITE: TEMPERED SAFETY GLASS)

TYPE 'C' GLAZING - INSULATED GLAZING SYSTEM (OUTSIDE LITE: LOW E COATING; INSIDE LITE: IMPACT RESISTANT GLASS

TYPE 'D' GLAZING - CLEAR FLOAT GLASS

TYPE 'E' GLAZING - FRAMELESS MIRRORS

IDENTIFICATION STAMP DIV. OF THE STATE ARCHITECT
APP: 02-118630 INC:
REVIEWED FOR
SS ☐ FLS ☐ ACS ☑
DATE: 04/13/2021

OFFICE OF THE STATE FIRE MARSHAL APPROVED FIRE AND PANIC ONLY
Approval of this plan does not authorize or approve any omission or deviation from applicable regulations. Final approval is subject to field inspection. One set of approved plans shall be available on the project site at all times.
PERMIT NO. 20-N-2332-CP
REVIEWED BY: LEO CATAYLO, OSFM
DATE: 3 / /2021

DGS GENERAL SERVICES
Department of General Services
State of California
Real Estate Services Division
Project Management & Development Branch
707 Third Street, Suite 4-105
West Sacramento, California 95605

NICHOLS MELBURG & ROSSETTO
ARCHITECTS + ENGINEERS
300 Knollcrest Drive
Redding, CA. 96002
(530) 222-3300 (530) 222-3538 FAX
http://www.nmrdesign.com

Copyright © 2020
All ideas, designs, arrangements and plans indicated or represented by this drawing are owned by, and the property of, NICHOLS, MELBURG and ROSSETTO and were created, evolved and developed for use on, and in conjunction with, the specified project. None of such ideas, designs, arrangements or plans shall be used by, or disclosed to any person, firm or corporation for any purpose whatsoever without the written permission of NICHOLS, MELBURG and ROSSETTO.

LICENSE STAMPS

LICENSED ARCHITECT KYLE MATTI C-27501 REN. 10/31/21 STATE OF CALIFORNIA

CONSULTANT

DRAWING STATUS
CONSTRUCTION DOCUMENTS

ISSUE

No.	Date	Description
1	10/20/2020	INITIAL PLAN REVIEW
2	01/22/2021	AGENCY RESUBMITTAL
3	03/22/2021	AGENCY RESUBMITTAL

If drawing is not 30" x 42" it is a reduced print

PROJECT
RESIDENTIAL CENTER, UKIAH: REPLACEMENT OF EXISTING RESIDENTIAL CENTER
440 EAST HILL ROAD
WILLITS, CALIFORNIA 95490
MENDOCINO COUNTY
CALIFORNIA CONSERVATION CORP

Supervisor	Designed	Drawn
KJM	DMH	AMP

DSA Application No.
02-118630

SHEET TITLE
WINDOW & LOUVER TYPES

DGS Project Number 000000000001826
NMR Project Number 18-6456

Reference North
Sheet Scale As indicated
Sheet Number A720

ISSUE DATE
July 9, 2021

Plot Date: 3/23/2021 4:55:28 PM
File Name: BIM 360://CCC Willits Residential Center/A_CCC-WRC-COMMON.rvt

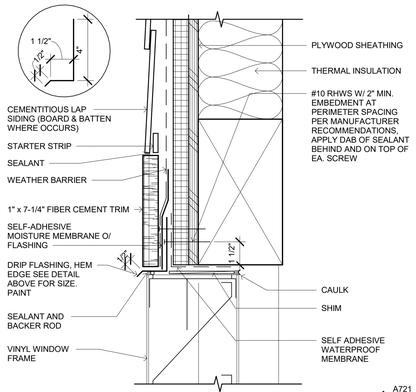

LOUVER HEAD

SCALE: 3" = 1'-0"

A721 17

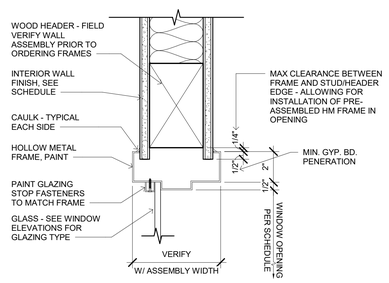

INTERIOR HOLLOW METAL WINDOW HEAD

SCALE: 3" = 1'-0"

A721 13

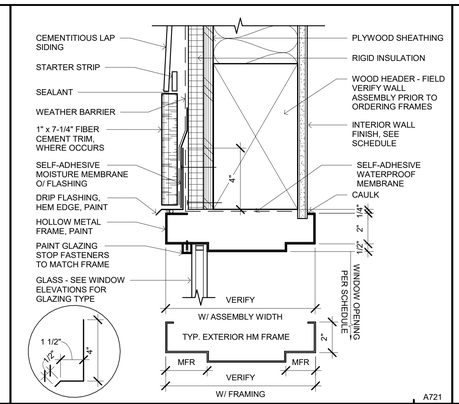

EXTERIOR HOLLOW METAL WINDOW HEAD

SCALE: 3" = 1'-0"

A721 9

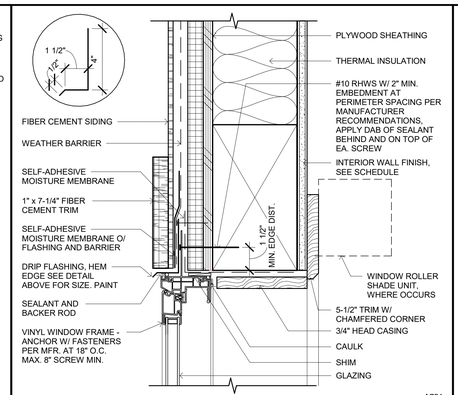

VINYL WINDOW HEAD AT BOARD & BATTEN

SCALE: 3" = 1'-0"

A721 5

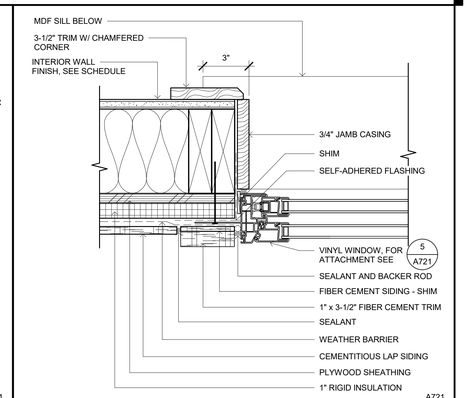

VINYL WINDOW JAMB AT LAP SIDING

SCALE: 3" = 1'-0"

A721 1

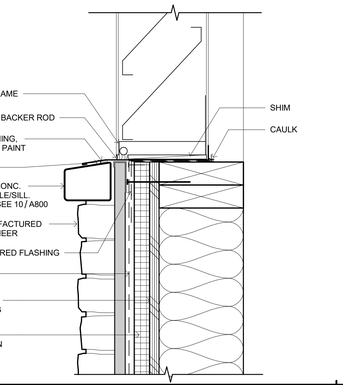

LOUVER JAMB

SCALE: 3" = 1'-0"

A721 18

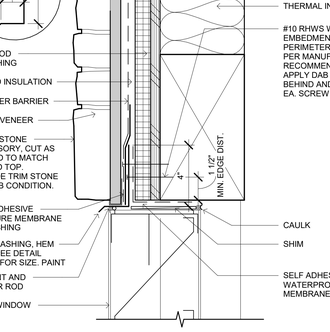

INTERIOR HOLLOW METAL WINDOW JAMB

SCALE: 3" = 1'-0"

A721 14

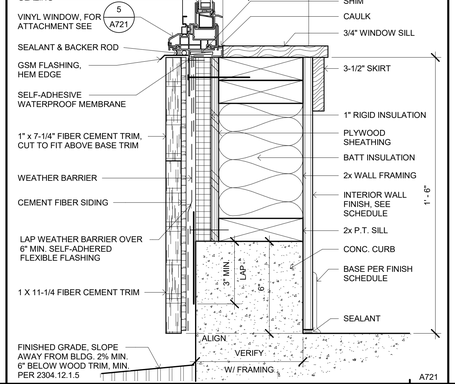

EXTERIOR HOLLOW METAL WINDOW JAMB

SCALE: 3" = 1'-0"

A721 10

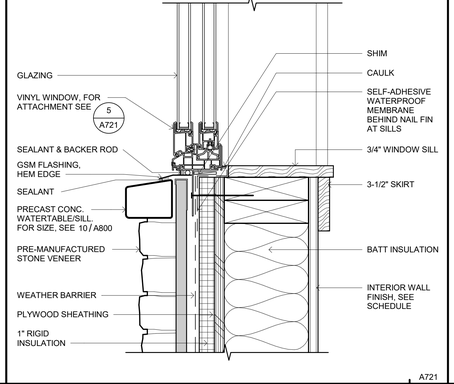

VINYL WINDOW JAMB AT BOARD & BATTEN

SCALE: 3" = 1'-0"

A721 6

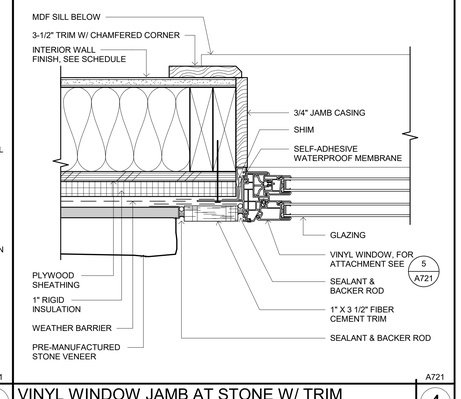

VINYL WINDOW SILL AT LAP SIDING

SCALE: 3" = 1'-0"

A721 2

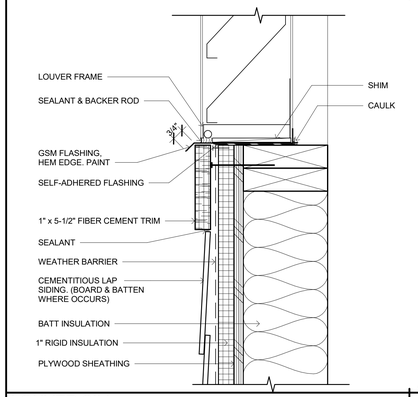

LOUVER SILL

SCALE: 3" = 1'-0"

A721 19

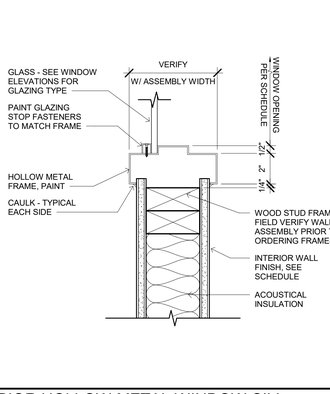

INTERIOR HOLLOW METAL WINDOW SILL

SCALE: 3" = 1'-0"

A721 15

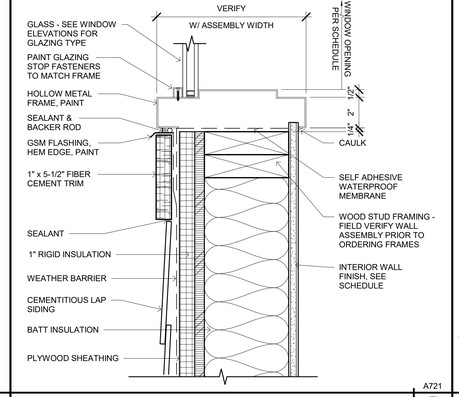

VINYL WINDOW SILL AT BASE TRIM

SCALE: 3" = 1'-0"

A721 11

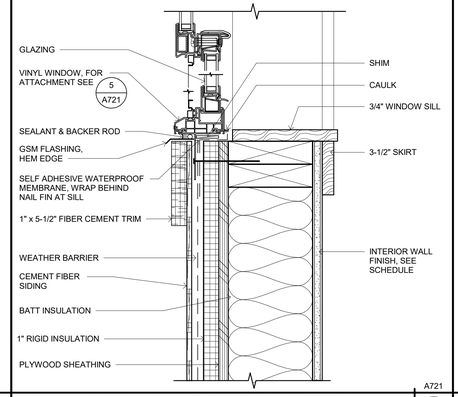

VINYL WINDOW SILL AT STONE

SCALE: 3" = 1'-0"

A721 8

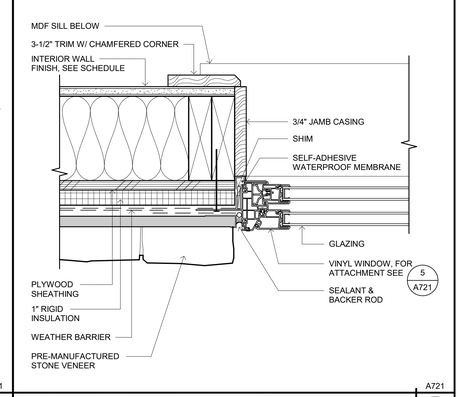

VINYL WINDOW JAMB AT STONE

SCALE: 3" = 1'-0"

A721 3

LOUVER SILL AT STONE

SCALE: 3" = 1'-0"

A721 20

LOUVER HEAD AT STONE (JAMB SIM.)

SCALE: 3" = 1'-0"

A721 16

Plot Date: 3/19/2021 11:20:56 AM
Plot Name: BIM 360://CCC Wilkins Residential Center/A_CCC-WRC-COMMON.rvt

IDENTIFICATION STAMP
DIV. OF THE STATE ARCHITECT
APP: 02-118630 INC:
REVIEWED FOR
SS ☐ FLS ☐ ACS ☑
DATE: 04/13/2021

OFFICE OF THE STATE FIRE MARSHAL
APPROVED FIRE AND PANIC ONLY
Approval of this plan does not authorize or approve any omission or deviation from applicable regulations. Final approval is subject to field inspection. One set of approved plans shall be available on the project site at all times.
PERMIT NO. 20-N-2332-CP
REVIEWED BY: LEO CATAYLO, OSFM
DATE: 4 / /2021

DGS
GENERAL SERVICES
Department of General Services
State of California
Real Estate Services Division
Project Management & Development Branch
707 Third Street, Suite 4-105
West Sacramento, California 95605

NICHOLS MELBURG & ROSSETTO
ARCHITECTS + ENGINEERS
300 Knollcrest Drive
Redding, CA. 96002
(530) 222-3300 (530) 222-3538 FAX
http://www.nmrdesign.com

Copyright © 2020
All ideas, designs, arrangements and plans indicated or represented by this drawing are owned by, and the property of, NICHOLS, MELBURG and ROSSETTO and were created, evolved and developed for use on, and in conjunction with, the specified project. None of such ideas, designs, arrangements or plans shall be used by, or disclosed to any person, firm or corporation for any purpose whatsoever without the written permission of NICHOLS, MELBURG and ROSSETTO

LICENSE STAMPS

LICENSED ARCHITECT KYLE MATTHEW ROSSETTO C-21504 REN. 10/31/21 STATE OF CALIFORNIA

CONSULTANT

DRAWING STATUS
CONSTRUCTION DOCUMENTS

ISSUE

No.	Date	Description
1	10/20/2020	INITIAL PLAN REVIEW
2	01/22/2021	AGENCY RESUBMITTAL
3	03/22/2021	AGENCY RESUBMITTAL

If drawing is not 30" x 42" it is a reduced print

PROJECT
RESIDENTIAL CENTER, UKIAH: REPLACEMENT OF EXISTING RESIDENTIAL CENTER
440 EAST HILL ROAD
WILLITS, CALIFORNIA 95490
MENDOCINO COUNTY
CALIFORNIA CONSERVATION CORP

Supervisor	Designed	Drawn
KJM	DMH	Author

DSA Application No.
02-118630

SHEET TITLE
WINDOW & LOUVER DETAILS

DGS Project Number: 00000000001826
NMR Project Number: 18-6456

Reference North: NORTH
Sheet Scale: 3" = 1'-0"
Sheet Number: A721

ISSUE DATE
July 9, 2021

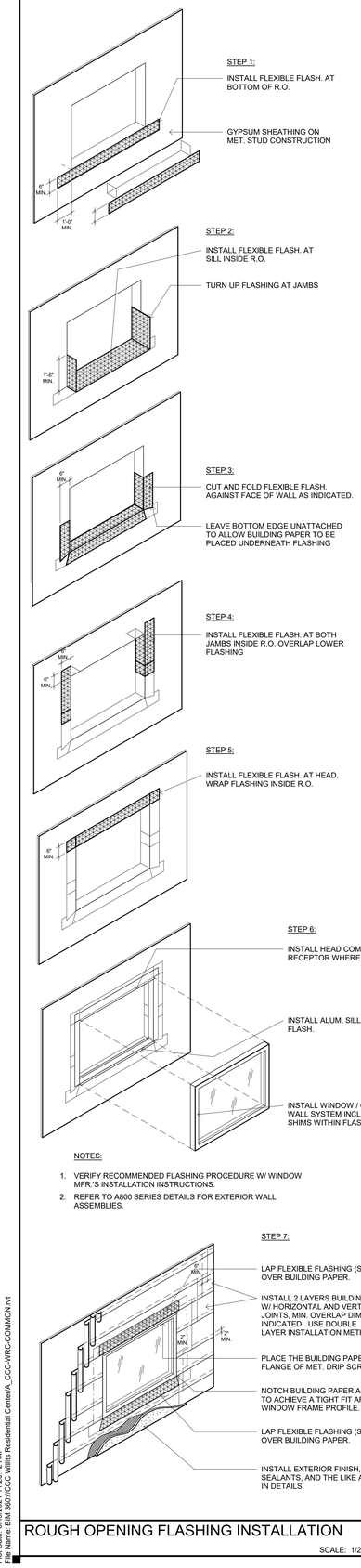

NOTES:

1. VERIFY RECOMMENDED FLASHING PROCEDURE W/ WINDOW MFR.'S INSTALLATION INSTRUCTIONS.
2. REFER TO A800 SERIES DETAILS FOR EXTERIOR WALL ASSEMBLIES.

ROUGH OPENING FLASHING INSTALLATION — A722 / 20
SCALE: 1/2" = 1'-0"

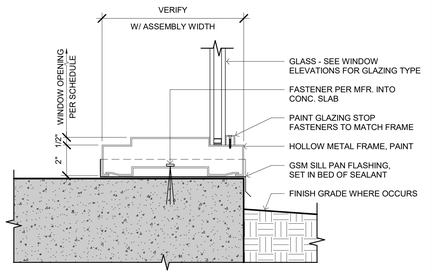

EXTERIOR HOLLOW METAL WINDOW SILL AT FINISH FLOOR — A722 / 13
SCALE: 3" = 1'-0"

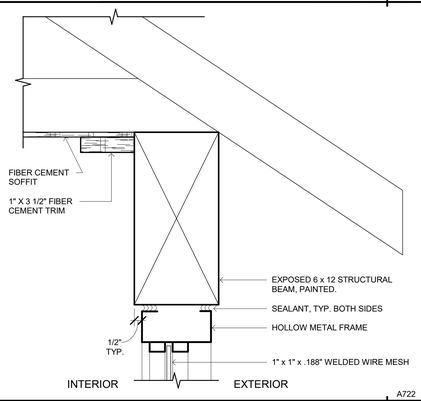

HOLLOW METAL MESH WINDOW HEAD — A722 / 14
SCALE: 3" = 1'-0"

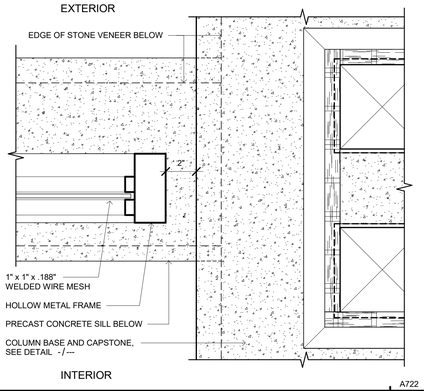

HOLLOW METAL MESH WINDOW JAMB — A722 / 15
SCALE: 3" = 1'-0"

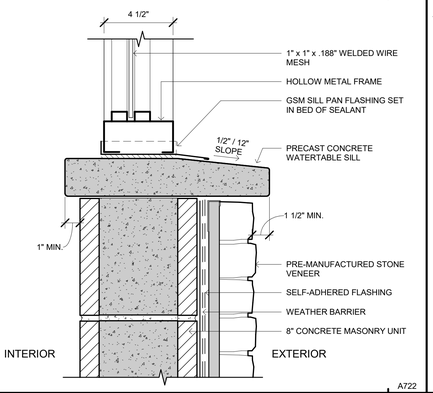

HOLLOW METAL MESH WINDOW SILL — A722 / 16
SCALE: 3" = 1'-0"

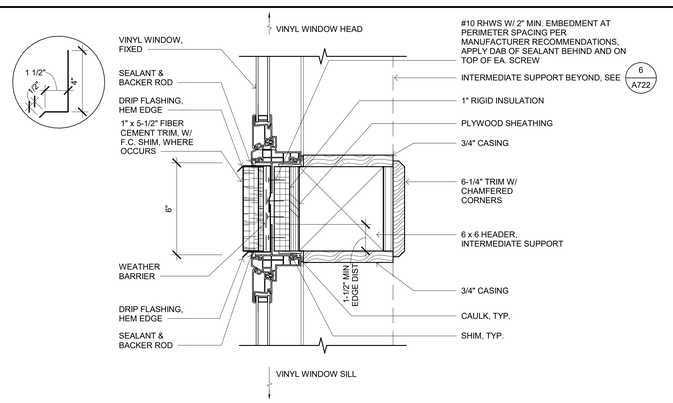

VINYL WINDOW COMPOSITION AT INTERMEDIATE SUPPORT - HEAD — A722 / 5
SCALE: 3" = 1'-0"

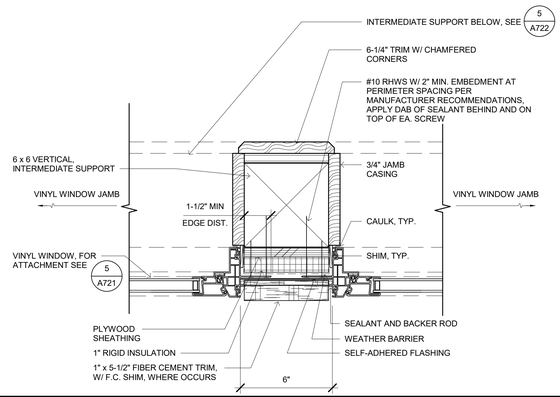

VINYL WINDOW JAMB AT JAMB — A722 / 7
SCALE: 3" = 1'-0"

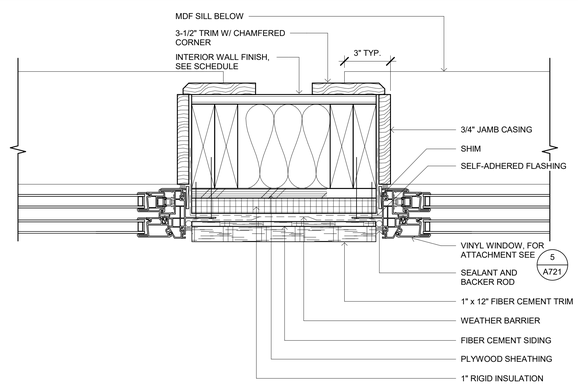

VINYL WINDOW JAMB AT JAMB — A722 / 7
SCALE: 3" = 1'-0"

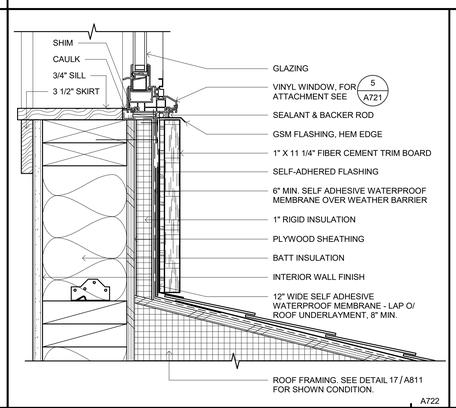

VINYL SILL AT MONITOR — A722 / 12
SCALE: 3" = 1'-0"

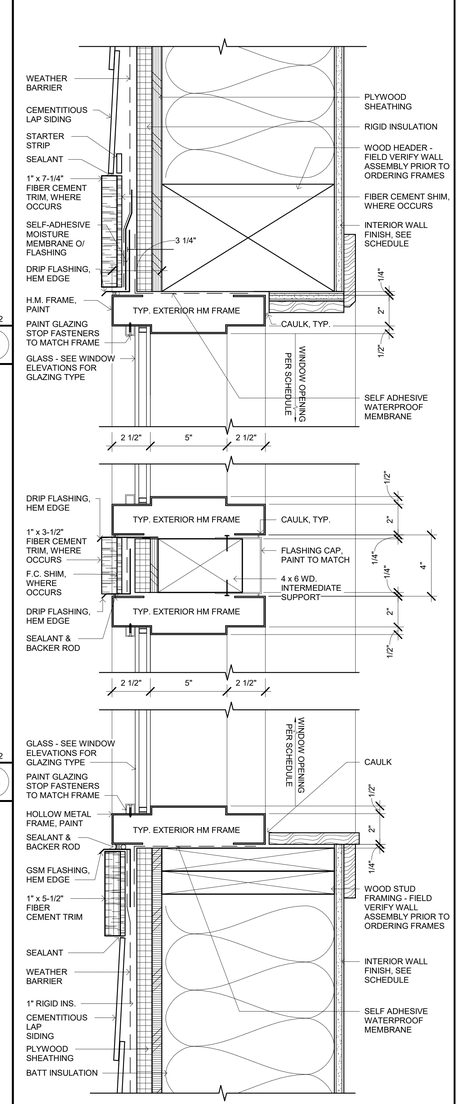

EXT. HOLLOW METAL WINDOW COMPOSITION AT HEAD, INT. SUPPORT, & SILL — A722 / 3
SCALE: 3" = 1'-0"

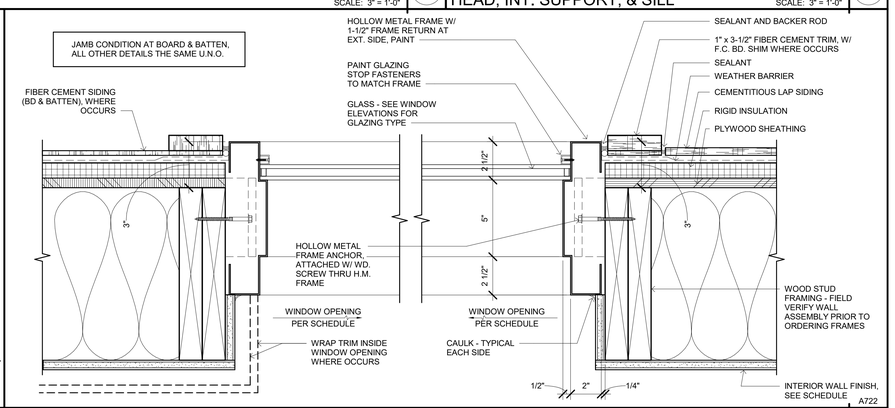

EXT. HOLLOW METAL WINDOW COMPOSITION AT JAMB — A722 / 4
SCALE: 3" = 1'-0"

IDENTIFICATION STAMP
DIV. OF THE STATE ARCHITECT
APP: 02-118630 INC:
REVIEWED FOR
SS ☐ FLS ☐ ACS ☑
DATE: 04/13/2021

OFFICE OF THE STATE FIRE MARSHAL
APPROVED FIRE AND PANIC ONLY
Approval of this plan does not authorize or approve any omission or deviation from applicable regulations. Final approval is subject to field inspection. One set of approved plans shall be available on the project site at all times.
PERMIT NO. 20-N-2332-CP
REVIEWED BY: LEO CATAYLO, OSFM
DATE: 4 / /2021

DGS
GENERAL SERVICES
Department of General Services
State of California
Real Estate Services Division
Project Management & Development Branch
707 Third Street, Suite 4-105
West Sacramento, California 95605

NICHOLS MELBURG & ROSSETTO
ARCHITECTS + ENGINEERS
300 Knollcrest Drive
Redding, CA. 96002
(530) 222-3300 (530) 222-3538 FAX
http://www.nmrdesign.com

Copyright © 2020
All ideas, designs, arrangements and plans indicated or represented by this drawing are owned by, and the property of, NICHOLS, MELBURG and ROSSETTO and were created, evolved and developed for use on, and in conjunction with, the specified project. None of such ideas, designs, arrangements or plans shall be used by, or disclosed to any person, firm or corporation for any purpose whatsoever without the written permission of NICHOLS, MELBURG and ROSSETTO.

LICENSE STAMPS

CONSULTANT

DRAWING STATUS
CONSTRUCTION DOCUMENTS

ISSUE

No.	Date	Description
1	10/20/2020	INITIAL PLAN REVIEW
2	01/22/2021	AGENCY RESUBMITTAL
3	03/22/2021	AGENCY RESUBMITTAL

If drawing is not 30" x 42" it is a reduced print

PROJECT
RESIDENTIAL CENTER, UKIAH: REPLACEMENT OF EXISTING RESIDENTIAL CENTER
440 EAST HILL ROAD
WILLITS, CALIFORNIA 95490
MENDOCINO COUNTY
CALIFORNIA CONSERVATION CORP

Supervisor	Designed	Drawn
KJM	DMH	Author

DSA Application No.
02-118630

SHEET TITLE
WINDOW & LOUVER DETAILS

DGS Project Number	NMR Project Number
000000000001826	18-6456

Reference North: NORTH
Sheet Scale: As indicated
Sheet Number: A722

ISSUE DATE
July 9, 2021

Plot Date: 3/19/2021 11:29:12 AM
File Name: BIM 360://CCC Willits Residential Center/A_CCC-WRC-COMMON.rvt

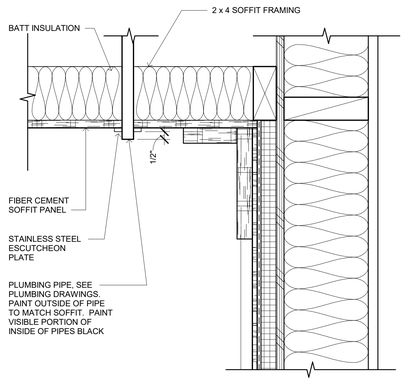

PIPE PENETRATION AT EXTERIOR SOFFIT — SCALE: 3" = 1'-0" — A800 / 17

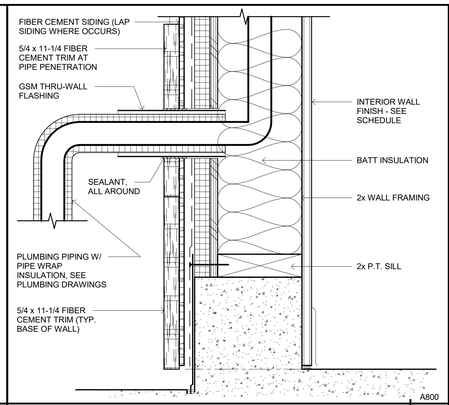

PIPE PENETRATION AT EXTERIOR WALL — SCALE: 3" = 1'-0" — A800 / 13

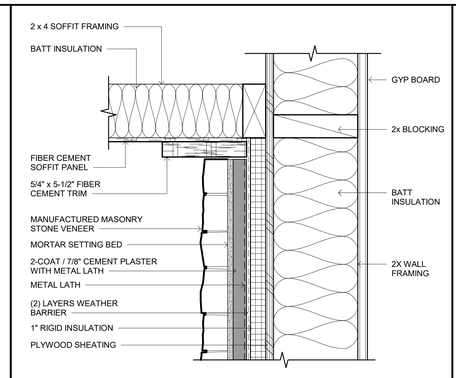

SOFFIT TO WALL STONE VENEER — SCALE: 3" = 1'-0" — A800 / 9

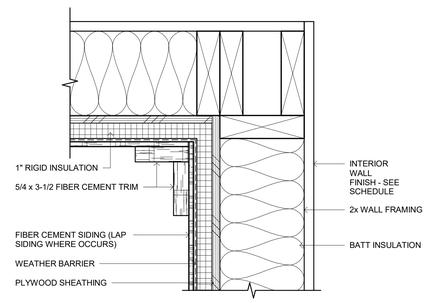

TYPICAL INSIDE CORNER FIBER CEMENT SIDING — SCALE: 3" = 1'-0" — A800 / 5

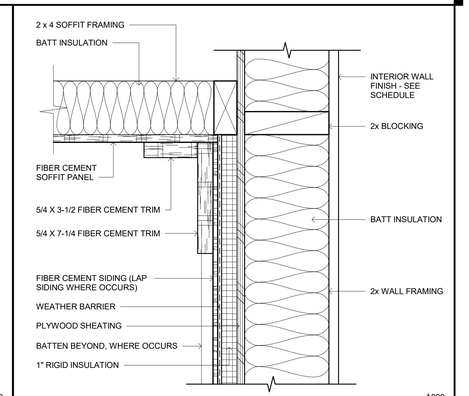

EXTERIOR WALL AT SOFFIT TYPICAL FIBER CEMENT SIDING — SCALE: 3" = 1'-0" — A800 / 1

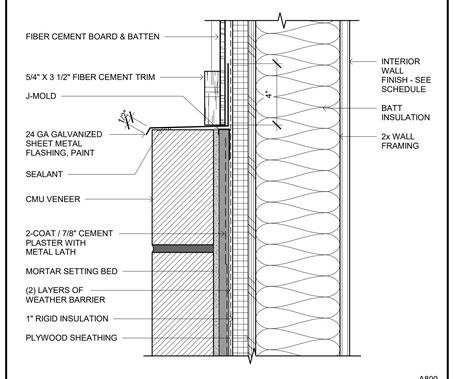

TOP OF CMU VENEER WAINSCOT — SCALE: 3" = 1'-0" — A800 / 14

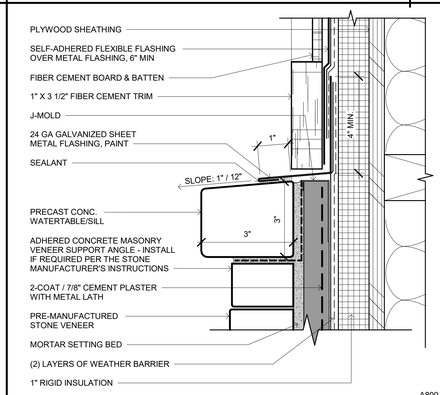

TOP OF STONE VENEER WAINSCOT — SCALE: 6" = 1'-0" — A800 / 10

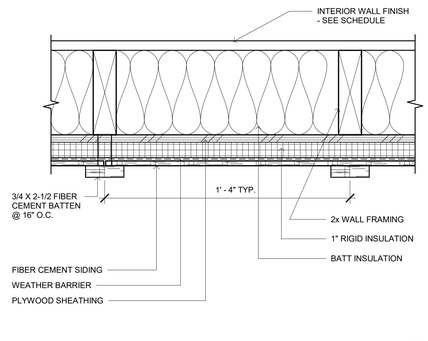

TYPICAL FIBER CEMENT VERTICAL PANEL BATTEN JOINT PLAN — SCALE: 3" = 1'-0" — A800 / 6

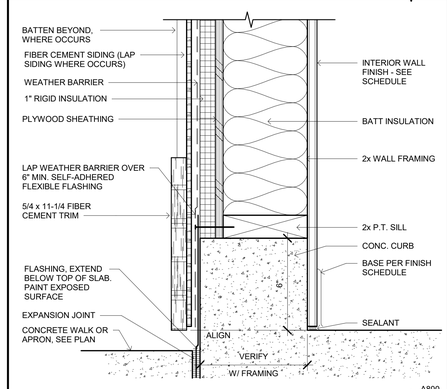

EXTERIOR WALL SILL AT SIDING — SCALE: 3" = 1'-0" — A800 / 2

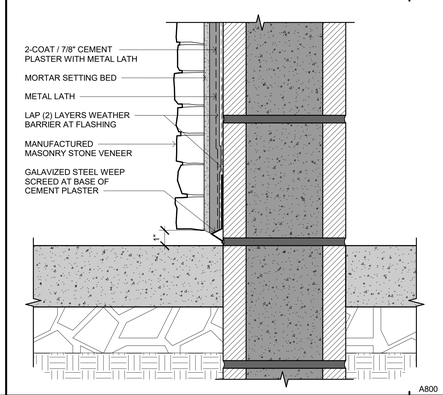

CMU WALL SILL AT STONE VENEER — SCALE: 3" = 1'-0" — A800 / 15

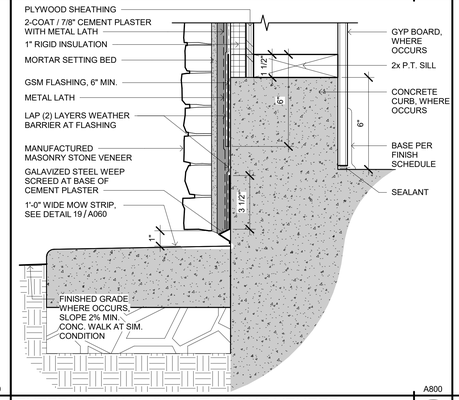

EXTERIOR WALL SILL AT STONE VENEER — SCALE: 3" = 1'-0" — A800 / 11

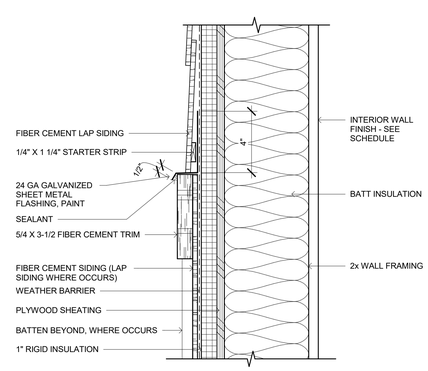

FIBER CEMENT LAP SIDING ABOVE FIBER CEMENT BATTENS — SCALE: 3" = 1'-0" — A800 / 7

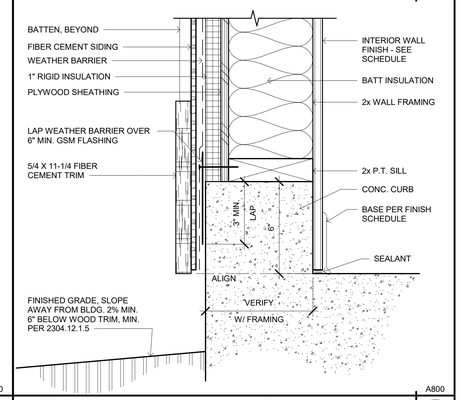

EXTERIOR WALL SILL AT GRADE — SCALE: 3" = 1'-0" — A800 / 3

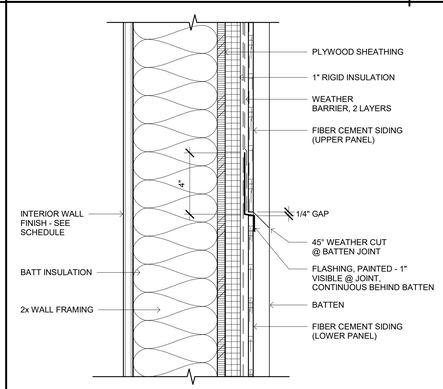

EXTERIOR WALL - JOINTS @ BOARD & BATTEN SIDING — SCALE: 3" = 1'-0" — A800 / 16

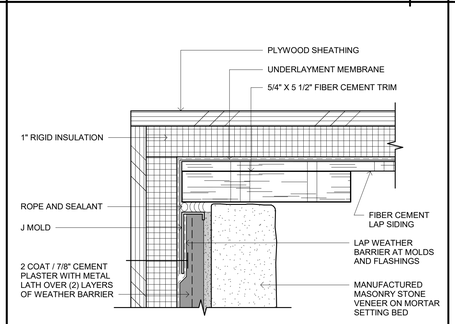

INSIDE CORNER - FIBER CEMENT LAP SIDING TO STONE VENEER PLAN — SCALE: 6" = 1'-0" — A800 / 12

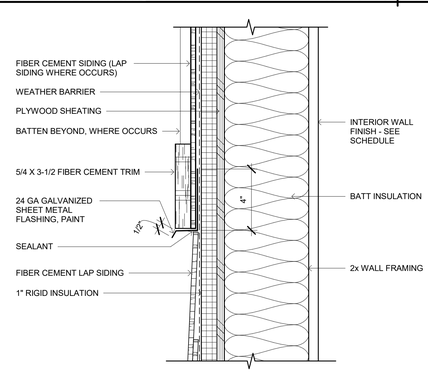

FIBER CEMENT BATTENS ABOVE FIBER LAP SIDING — SCALE: 3" = 1'-0" — A800 / 8

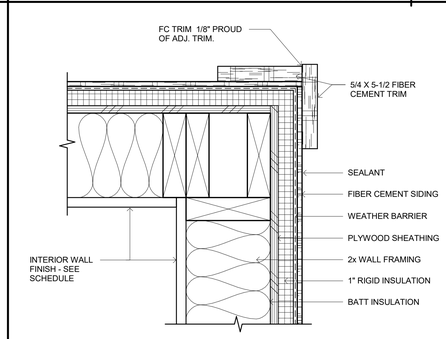

TYPICAL OUTSIDE CORNER FIBER CEMENT SIDING PLAN — SCALE: 3" = 1'-0" — A800 / 4

IDENTIFICATION STAMP
DIV. OF THE STATE ARCHITECT
APP: 02-118630 INC:
REVIEWED FOR
SS ☐ FLS ☐ ACS ☑
DATE: 04/13/2021

OFFICE OF THE STATE FIRE MARSHAL
APPROVED FIRE AND PANIC ONLY
Approval of this plan does not authorize or approve any omission or deviation from applicable regulations. Final approval is subject to field inspection. One set of approved plans shall be available on the project site at all times.
PERMIT NO: 20-N-2332-CP
REVIEWED BY: LEO CATAYLO, OSFM
DATE: 4 / /2021

DGS GENERAL SERVICES
Department of General Services
State of California
Real Estate Services Division
Project Management & Development Branch
707 Third Street, Suite 4-105
West Sacramento, California 95605

NICHOLS MELBURG & ROSSETTO ARCHITECTS + ENGINEERS
300 Knollcrest Drive
Redding, CA. 96002
(530) 222-3300 (530) 222-3538 FAX
http://www.nmrdesign.com

Copyright © 2020
All ideas, designs, arrangements and plans indicated or represented by this drawing are owned by, and the property of, NICHOLS, MELBURG and ROSSETTO and were created, evolved and developed for use on, and in conjunction with, the specified project. None of such ideas, designs, arrangements or plans shall be used by, or disclosed to any person, firm or corporation for any purpose whatsoever without the written permission of NICHOLS, MELBURG and ROSSETTO

LICENSE STAMPS

LICENSED ARCHITECT KYLE MATTHEW ROSSETTO C-21504 REN. 10/31/21 STATE OF CALIFORNIA

CONSULTANT

DRAWING STATUS
CONSTRUCTION DOCUMENTS

ISSUE

No.	Date	Description
1	10/20/2020	INITIAL PLAN REVIEW
2	01/22/2021	AGENCY RESUBMITTAL
3	03/22/2021	AGENCY RESUBMITTAL

If drawing is not 30" x 42" it is a reduced print

PROJECT
RESIDENTIAL CENTER, UKIAH: REPLACEMENT OF EXISTING RESIDENTIAL CENTER
440 EAST HILL ROAD
WILLITS, CALIFORNIA 95490
MENDOCINO COUNTY
CALIFORNIA CONSERVATION CORP

Supervisor	Designed	Drawn
KJM	DMH	Author

DSA Application No.
02-118630

SHEET TITLE
EXTERIOR DETAILS - BUILDING ENVELOPE

DGS Project Number	NMR Project Number
000000000001826	18-6456

Reference North — NORTH
Sheet Scale: As indicated
Sheet Number: A800

ISSUE DATE
July 9, 2021

Plot Date: 3/19/2021 11:29:15 AM
File Name: 3184.300 / CCC Willits Residential Center/A_CCC-WRC-COMMON.rvt

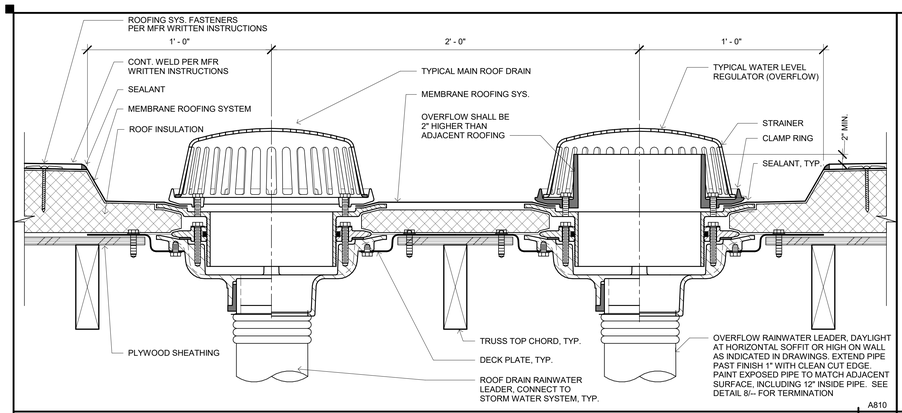

ROOF DRAIN & OVERFLOW

SCALE: 3" = 1'-0"

A810 13

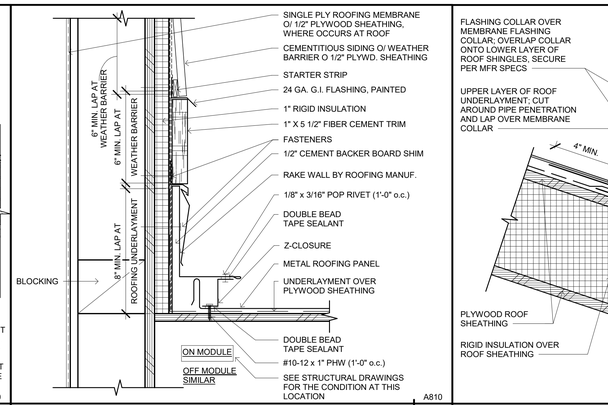

ROOF TO WALL TRANSITION AT PARAPET PARALLEL TO ROOFING

SCALE: 3" = 1'-0"

A810 9

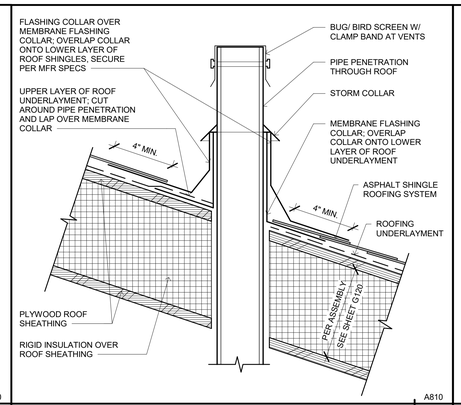

ASPHALT SHINGLE ROOF - PIPE PENETRATION

SCALE: 3" = 1'-0"

A810 5

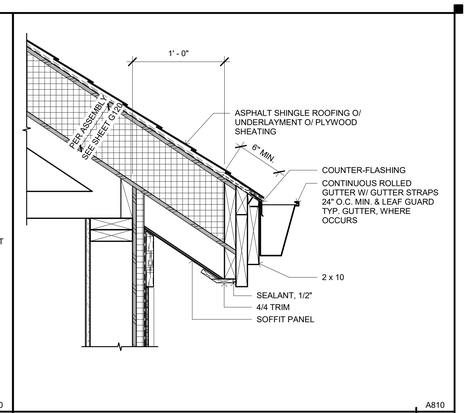

ROOF EAVE W/ GUTTER AT ASPHALT ROOF

SCALE: 1 1/2" = 1'-0"

A810 1

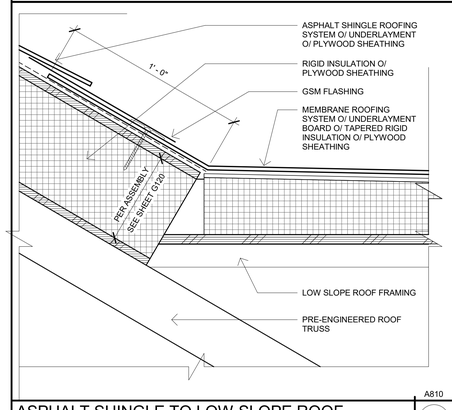

ASPHALT SHINGLE TO LOW SLOPE ROOF TRANSITION

SCALE: 3" = 1'-0"

A810 18

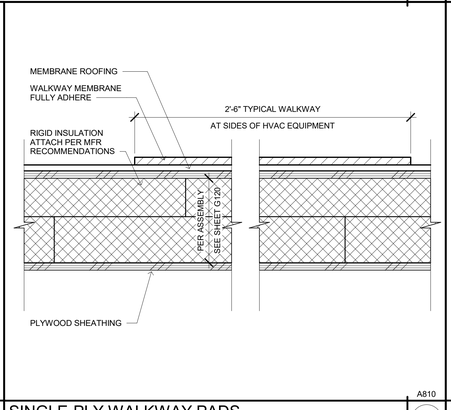

SINGLE-PLY WALKWAY PADS

SCALE: 3" = 1'-0"

A810 14

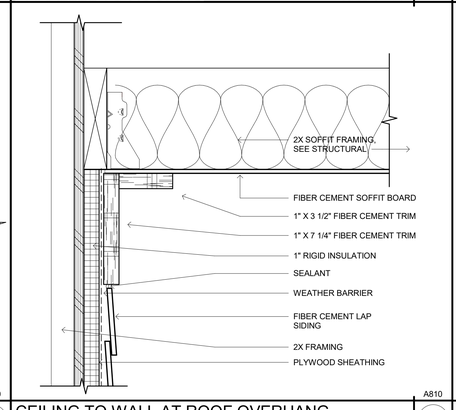

CEILING TO WALL AT ROOF OVERHANG

SCALE: 3" = 1'-0"

A810 10

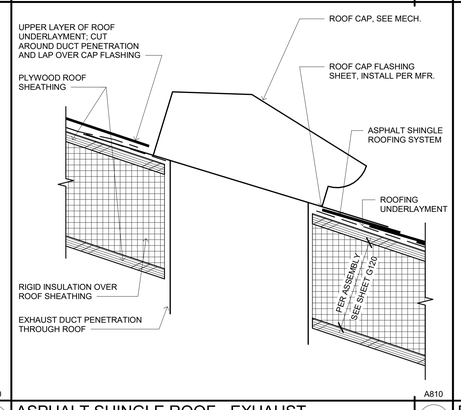

ASPHALT SHINGLE ROOF - EXHAUST PENTRATION

SCALE: 3" = 1'-0"

A810 6

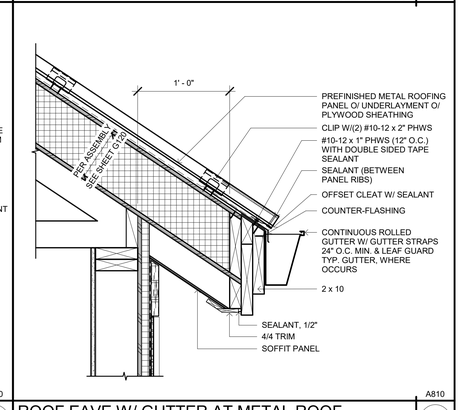

ROOF EAVE W/ GUTTER AT METAL ROOF

SCALE: 1 1/2" = 1'-0"

A810 2

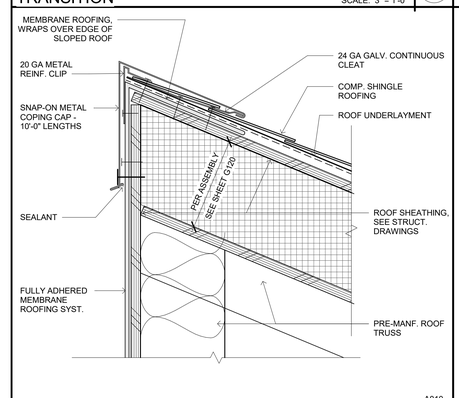

ROOF TRANSITION AT SINGLE-PLY ROOFING TO SHINGLE ROOF

SCALE: 3" = 1'-0"

A810 19

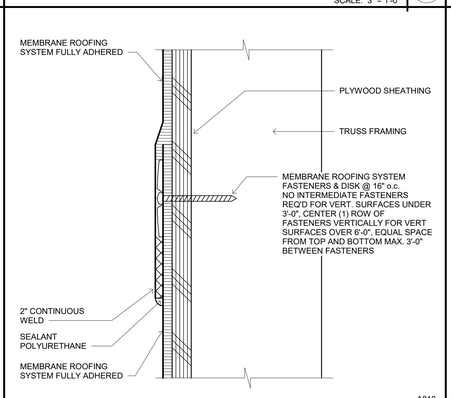

VERTICAL SINGLE PLY MEMBRANE LAPS (HORIZONTAL SIMILAR)

SCALE: 6" = 1'-0"

A810 15

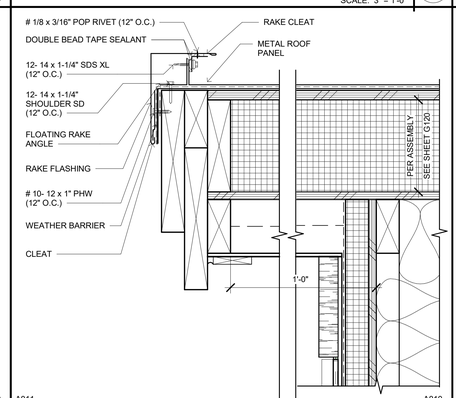

RAKE AT METAL ROOF

SCALE: 3" = 1'-0"

A811 A810 11

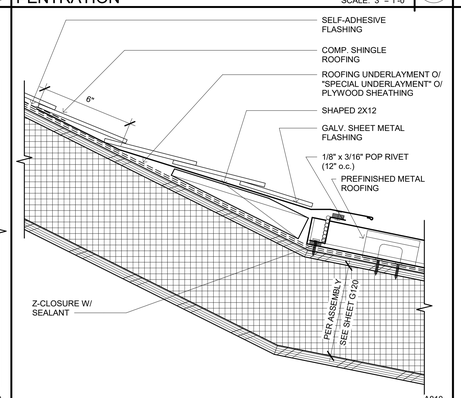

SHINGLE ROOFING TO METAL ROOFING TRANSITION

SCALE: 3" = 1'-0"

A810 7

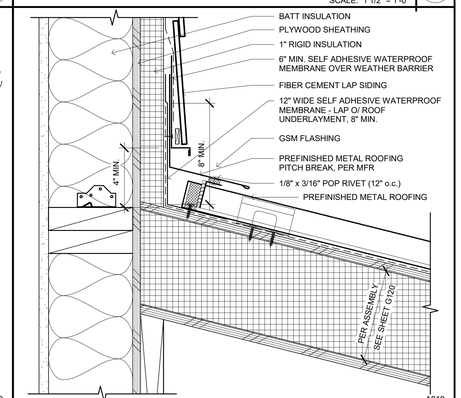

FIBER CEMENT SIDING AT ROOF-TO-WALL

SCALE: 3" = 1'-0"

A810 3

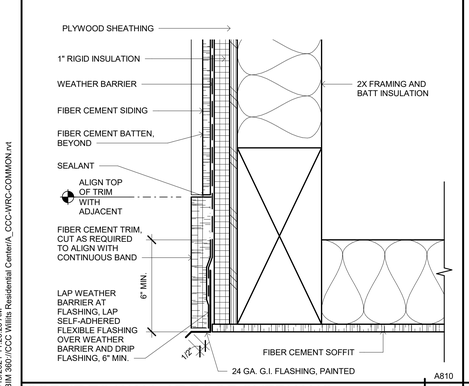

SOFFIT TO WALL AT ROOF OVERHANG

SCALE: 3" = 1'-0"

A810 20

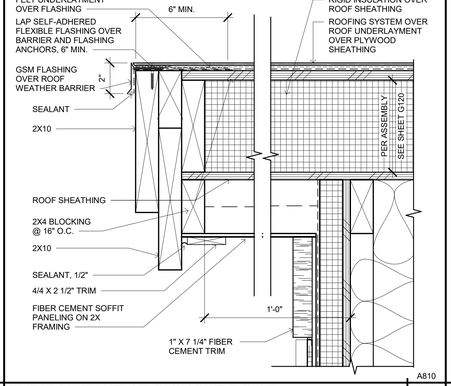

TYPICAL RAKE AT SHINGLE ROOF

SCALE: 3" = 1'-0"

A810 16

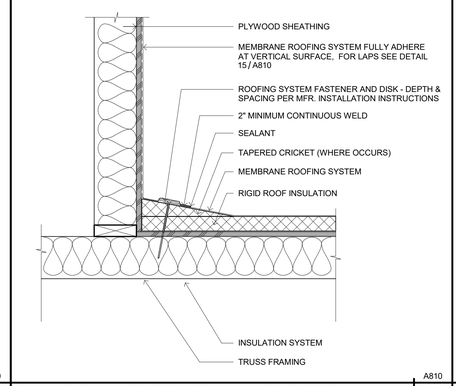

SINGLE-PLY MEMBRANE WALL TO ROOF TRANSITION AT WOOD WALL

SCALE: 1 1/2" = 1'-0"

A810 12

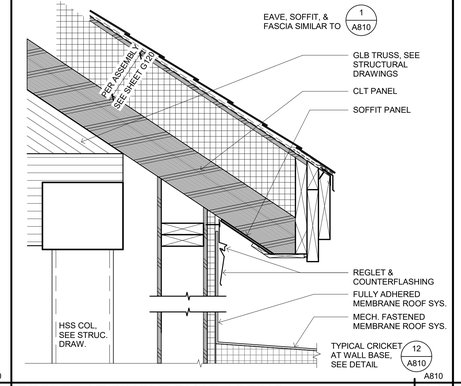

REGLET AT SINGLE-PLY ROOFING

SCALE: 1 1/2" = 1'-0"

A810 8

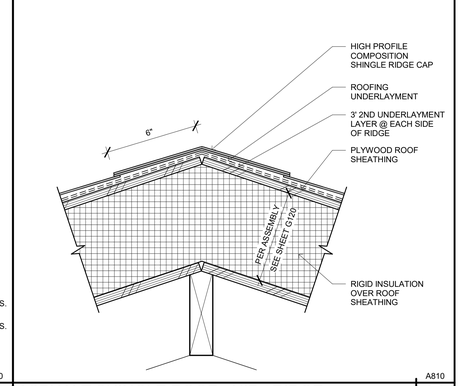

ASPHALT SHINGLE ROOF - HIP / RIDGE

SCALE: 3" = 1'-0"

A810 4

IDENTIFICATION STAMP
DIV. OF THE STATE ARCHITECT
APP: 02-118630 INC:
REVIEWED FOR
SS ☐ FLS ☐ ACS ☑
DATE: 04/13/2021

OFFICE OF THE STATE FIRE MARSHAL
APPROVED FIRE AND PANIC ONLY
Approval of this plan does not authorize or approve any omission or deviation from applicable regulations. Final approval is subject to field inspection. One set of approved plans shall be available on the project site at all times.
PERMIT NO. 20-N-2332-CP
REVIEWED BY: LEO CATAYLO, OSFM
DATE: 4 / /2021

GENERAL SERVICES
Department of General Services
State of California
Real Estate Services Division
Project Management & Development Branch
707 Third Street, Suite 4-105
West Sacramento, California 95605

NICHOLS MELBURG & ROSSETTO ARCHITECTS + ENGINEERS
300 Knollcrest Drive
Redding, CA. 96002
(530) 222-3300 (530) 222-3538 FAX
http://www.nmrdesign.com

Copyright © 2020
All ideas, designs, arrangements and plans indicated or represented by this drawing are owned by, and the property of, NICHOLS, MELBURG and ROSSETTO and were created, evolved and developed for use on, and in conjunction with, the specified project. None of such ideas, designs, arrangements or plans shall be used by, or disclosed to any person, firm or corporation for any purpose whatsoever without the written permission of NICHOLS, MELBURG and ROSSETTO

LICENSE STAMPS

LICENSED ARCHITECT KYLE MATTHEW MELBURG C-21504 REN. 10/31/21 STATE OF CALIFORNIA

CONSULTANT

DRAWING STATUS
CONSTRUCTION DOCUMENTS

ISSUE

No.	Date	Description
1	10/20/2020	INITIAL PLAN REVIEW
2	01/22/2021	AGENCY RESUBMITTAL
3	03/22/2021	AGENCY RESUBMITTAL

If drawing is not 30" x 42" it is a reduced print

PROJECT
RESIDENTIAL CENTER, UKIAH: REPLACEMENT OF EXISTING RESIDENTIAL CENTER
440 EAST HILL ROAD
WILLITS, CALIFORNIA 95490
MENDOCINO COUNTY
CALIFORNIA CONSERVATION CORP

Supervisor	Designed	Drawn
KJM	DMH	Author

DSA Application No.
02-118630

SHEET TITLE
EXTERIOR DETAILS - ROOFING

DGS Project Number: 000000000001826
NMR Project Number: 18-6456

Reference North: NORTH
Sheet Scale: As indicated
Sheet Number: A810

ISSUE DATE
July 9, 2021

Plot Date: 2/19/2021 11:26:20 AM
File Name: 1810 300 //CCC Willits Residential Center/A_CCC-WRC-COMMON.rvt

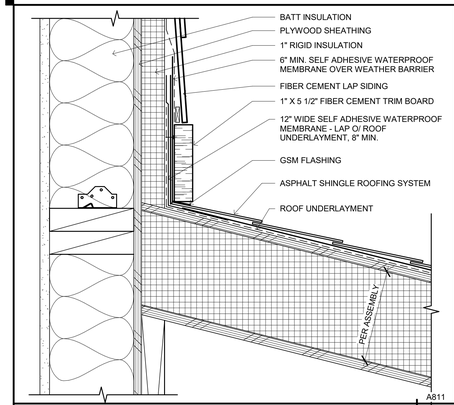

FIBER CEMENT SIDING AT ASHPALT ROOF-TO-WALL PARALLEL — A811 — 17

SCALE: 3" = 1'-0"

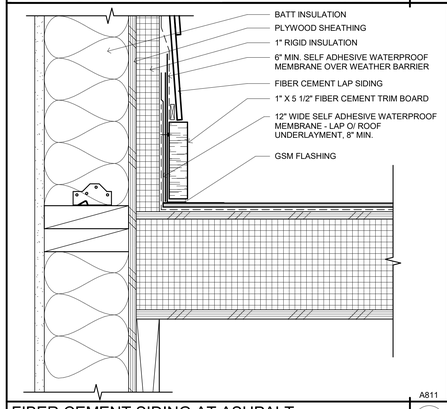

FIBER CEMENT SIDING AT ASHPALT ROOF-TO-WALL PERPENDICULAR — A811 — 18

SCALE: 3" = 1'-0"

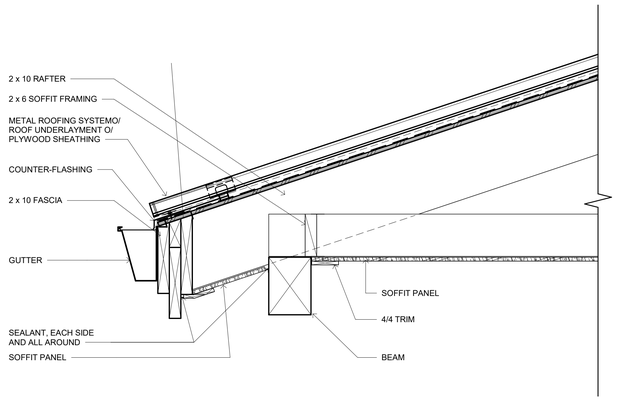

LOW SLOPE ROOF OVERHANG SOFFIT — A811 — 10

SCALE: 1 1/2" = 1'-0"

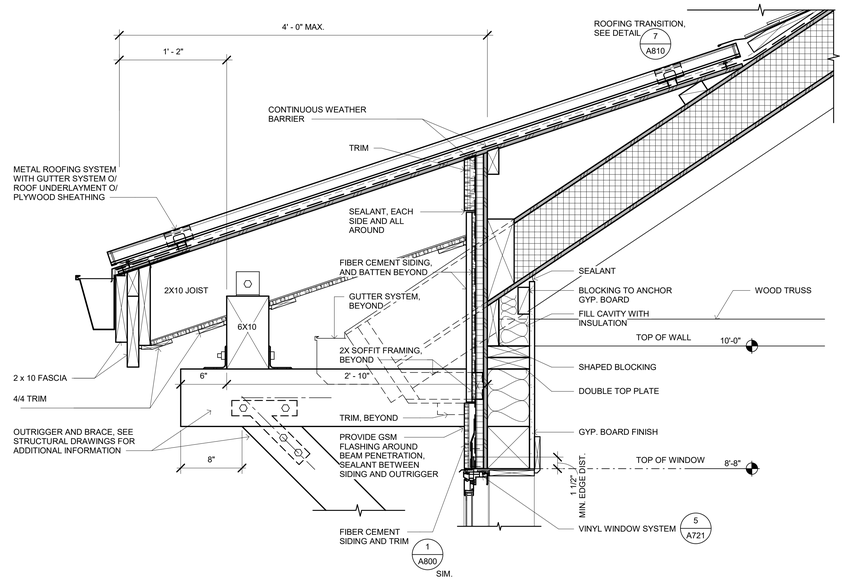

LOW SLOPE ROOF OVERHANG AT TYPICAL OUTRIGGER — A811 — 2

SCALE: 1 1/2" = 1'-0"

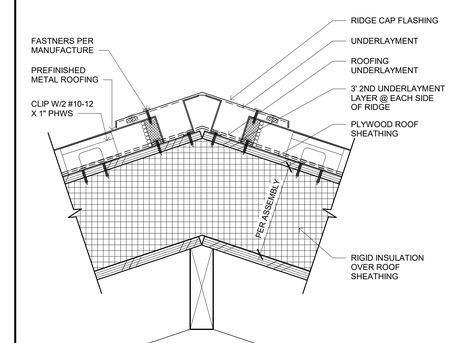

METAL ROOF - HIP / RIDGE — A811 — 16

SCALE: 3" = 1'-0"

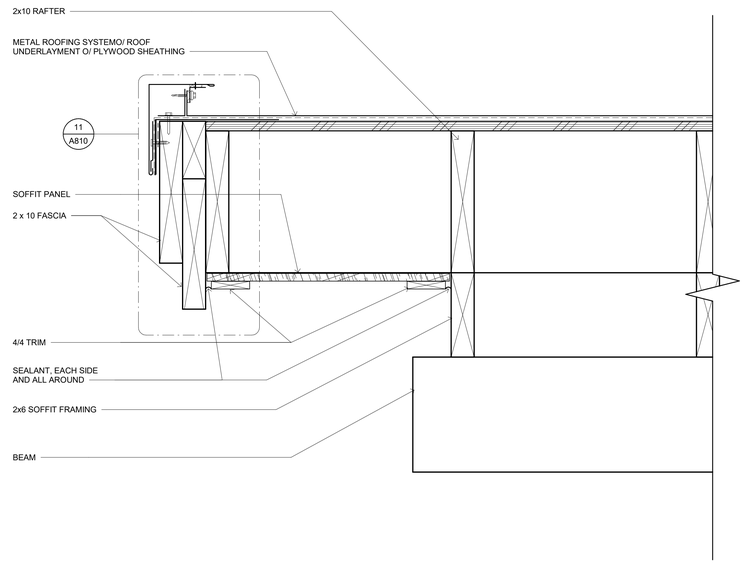

RAKE AT METAL ROOF OVERHANG — A811 — 8

SCALE: 3" = 1'-0"

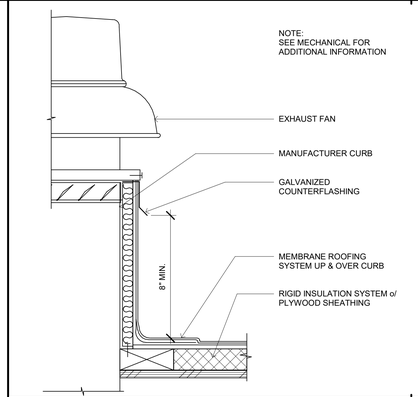

EXHAUST FAN CURB — A811 — 3

SCALE: 3" = 1'-0"

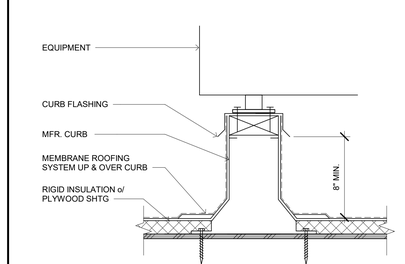

HEAT PUMP CURB — A811 — 4

SCALE: 1 1/2" = 1'-0"

IDENTIFICATION STAMP
DIV. OF THE STATE ARCHITECT
APP: 02-118630 INC:
REVIEWED FOR
SS ☐ FLS ☐ ACS ☑
DATE: 04/13/2021

OFFICE OF THE STATE FIRE MARSHAL
APPROVED FIRE AND PANIC ONLY
Approval of this plan does not authorize or approve any omission or deviation from applicable regulations. Final approval is subject to field inspection. One set of approved plans shall be available on the project site at all times.
PERMIT NO. 20 N 2332 CP
REVIEWED BY: LEO CATAYLO, OSFM
DATE: 4 / /2021

GENERAL SERVICES
Department of General Services
State of California
Real Estate Services Division
Project Management & Development Branch
707 Third Street, Suite 4-105
West Sacramento, California 95605

NICHOLS MELBURG & ROSSETTO ARCHITECTS + ENGINEERS
300 Knollcrest Drive
Redding, CA. 96002
(530) 222-3300 (530) 222-3538 FAX
http://www.nmrdesign.com

Copyright © 2020
All ideas, designs, arrangements and plans indicated or represented by this drawing are owned by, and the property of, NICHOLS, MELBURG and ROSSETTO and were created, evolved and developed for use on, and in conjunction with, the specified project. None of such ideas, designs, arrangements or plans shall be used by, or disclosed to any person, firm or corporation for any purpose whatsoever without the written permission of NICHOLS, MELBURG and ROSSETTO

LICENSE STAMPS

LICENSED ARCHITECT KYLE MATTHEW TAYLOR C-31504 REN. 10/31/21 STATE OF CALIFORNIA

CONSULTANT

DRAWING STATUS
CONSTRUCTION DOCUMENTS

ISSUE

No.	Date	Description
1	10/20/2020	INITIAL PLAN REVIEW
2	01/22/2021	AGENCY RESUBMITTAL
3	03/22/2021	AGENCY RESUBMITTAL

If drawing is not 30" x 42" it is a reduced print

PROJECT
RESIDENTIAL CENTER, UKIAH: REPLACEMENT OF EXISTING RESIDENTIAL CENTER
440 EAST HILL ROAD
WILLITS, CALIFORNIA 95490
MENDOCINO COUNTY
CALIFORNIA CONSERVATION CORP

Supervisor	Designed	Drawn
KJM	DMH	Author

DSA Application No.
02-118630

SHEET TITLE
EXTERIOR DETAILS - ROOFING

DGS Project Number: 000000000001826
NMR Project Number: 18-6456

Reference North
Sheet Scale: As indicated
Sheet Number: A811

ISSUE DATE
July 9, 2021

Plot Date: 3/16/2021 10:40:52 AM
File Name: [BIM 360://CC2 Willits Residential Center/A_CCC-WRC-COMMON.rvt

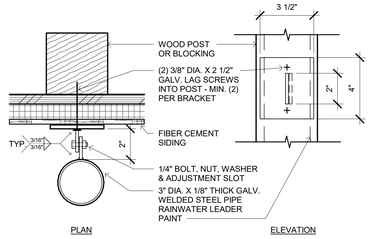

RAINWATER LEADER ATTACHMENT AT SIDING — A820 / 9

SCALE: 3" = 1'-0"

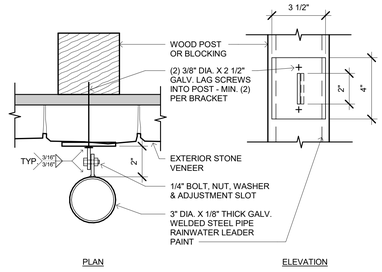

RAINWATER LEADER ATTACHMENT AT STONE VENEER — A820 / 5

SCALE: 3" = 1'-0"

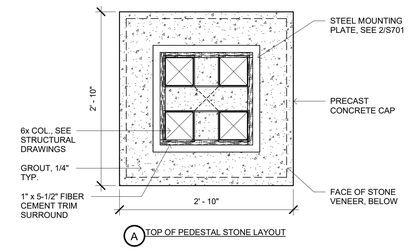

A TOP OF PEDESTAL STONE LAYOUT

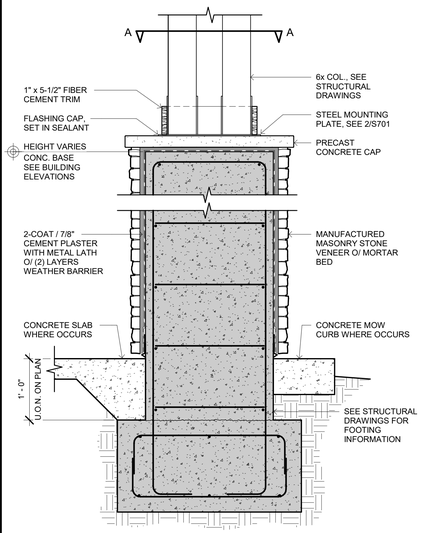

COLUMN DETAIL — A820 / 11

SCALE: 1" = 1'-0"

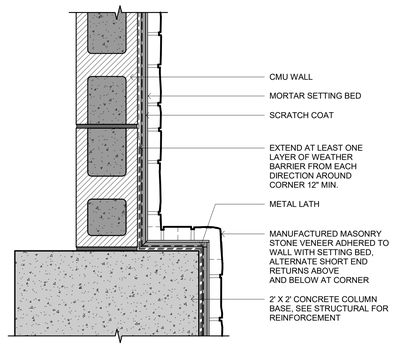

CMU TO CONCRETE INSIDE CORNER — A820 / 7

SCALE: 1 1/2" = 1'-0"

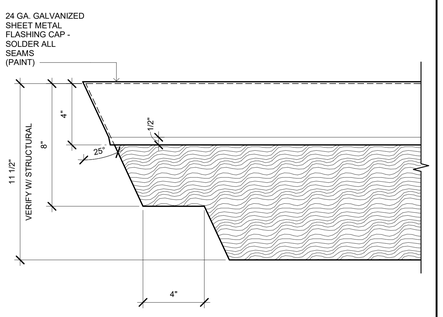

BEAM END DETAIL — A820 / 3

SCALE: 3" = 1'-0"

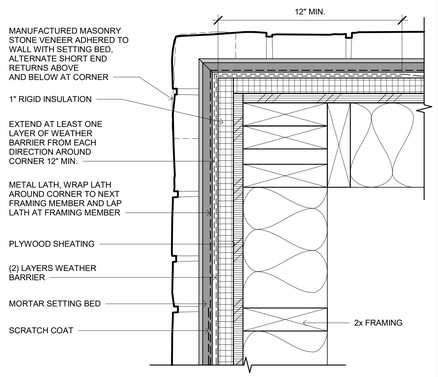

STONE VENEER OUTSIDE CORNER — A820 / 12

SCALE: 3" = 1'-0"

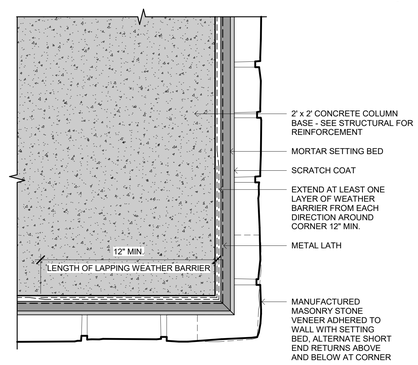

STONE TO CONCRETE OUTSIDE CORNER — A820 / 8

SCALE: 3" = 1'-0"

IDENTIFICATION STAMP
DIV. OF THE STATE ARCHITECT
APP: 02-118630 INC:
REVIEWED FOR
SS ☐ FLS ☐ ACS ☑
DATE: 04/13/2021

OFFICE OF THE STATE FIRE MARSHAL
APPROVED FIRE AND PANIC ONLY
Approval of this plan does not authorize or approve any omission or deviation from applicable regulations. Final approval is subject to field inspection. One set of approved plans shall be available on the project site at all times.
PERMIT NO. 20-N-2332-CP
REVIEWED BY: LEO CATAYLO, OSFM
DATE: 4 / 1 /2021

GENERAL SERVICES
Department of General Services
State of California
Real Estate Services Division
Project Management & Development Branch
707 Third Street, Suite 4-105
West Sacramento, California 95605

NICHOLS MELBURG & ROSSETTO
ARCHITECTS + ENGINEERS
300 Knollcrest Drive
Redding, CA. 96002
(530) 222-3300 (530) 222-3538 FAX
http://www.nmrdesign.com

Copyright © 2020
All ideas, designs, arrangements and plans indicated or represented by this drawing are owned by, and the property of, NICHOLS, MELBURG and ROSSETTO and were created, evolved and developed for use on, and in conjunction with, the specified project. None of such ideas, designs, arrangements or plans shall be used by, or disclosed to any person, firm or corporation for any purpose whatsoever without the written permission of NICHOLS, MELBURG and ROSSETTO.

LICENSE STAMPS

LICENSED ARCHITECT — KYLE MATTHEW — 27505 — REN. 10/31/21 — STATE OF CALIFORNIA

CONSULTANT

DRAWING STATUS
CONSTRUCTION DOCUMENTS

ISSUE

No.	Date	Description
1	10/20/2020	INITIAL PLAN REVIEW
2	01/22/2021	AGENCY RESUBMITTAL
3	03/22/2021	AGENCY RESUBMITTAL

If drawing is not 30" x 42" it is a reduced print

PROJECT
RESIDENTIAL CENTER, UKIAH: REPLACEMENT OF EXISTING RESIDENTIAL CENTER
440 EAST HILL ROAD
WILLITS, CALIFORNIA 95490
MENDOCINO COUNTY
CALIFORNIA CONSERVATION CORP

Supervisor	Designed	Drawn
KJM	DMH	Author

DSA Application No.
02-118630

SHEET TITLE
EXTERIOR DETAILS - MISCELLANEOUS

DGS Project Number: 000000000001826
NMR Project Number: 18-6456

Reference North: NORTH
Sheet Scale: As indicated
Sheet Number: A820

ISSUE DATE
July 9, 2021

Plot Date: 3/19/2021 11:05:08 AM
File Name: B:\A 360 \C2C\ Willits Residential Center\A_CCC-WRC-COMMON.rvt

FINISH SCHEDULE LEGEND

FLOOR FINISH SELECTIONS

CARPET

CPT-1	MANUFACTURER	MANNINGTON COMMERCIAL
	STYLE	WATERCOLOR MOIRE
	COLOR	FLINT
	SIZE	24"X24"
	INSTALL	VERTICAL ASHLAR
CPT-2	MANUFACTURER	MANNINGTON COMMERCIAL
	STYLE	TULLE
	COLOR	FLINT
	SIZE	24"X24"
	INSTALL	VERTICAL ASHLAR
CPT-3	MANUFACTURER	MANNINGTON COMMERCIAL
	STYLE	HAZE - DARK SKIES
	COLOR	TERRAIN
	SIZE	18"X36"
	INSTALL	VERTICAL ASHLAR

CONCRETE

C-1	MANUFACTURER	SCOFIELD
	STYLE	FORMULA ONE
	COLOR	CLEAR
	FINISH	SEALED
C-2	MANUFACTURER	SCOFIELD
	STYLE	FORMULA ONE
	COLOR	STORM CLOUD 3055
	FINISH	SEALED

EPOXY FLOORING

EPY-1	MANUFACTURER	TERA LITE
	STYLE	TERA-GEM III DQ DOLO
	COLOR	CHARCOAL
	TEXTURE	#70 MESH
	BASE	6" HIGH SELF COVED

FLOOR TILE

FT-1	MANUFACTURER	DALTILE
	STYLE	MARBLE ATTACHE LINEAR HEX MOSAIC
	COLOR	CRUX MA84
	SIZE	12"X12" MESH-MOUNTED SHEET
	GROUT	HYDROMENT (EPOXY)
	GROUT COLOR	DELOREON GRAY

LUXURY VINYL TILE

LVT-1	MANUFACTURER	SHAW CONTRACT
	STYLE	CUT 0922V
	COLOR	SIENNA
	SIZE	18"X18" X 5MM THICK
	INSTALL	QUARTER TURN
LVT-2	MANUFACTURER	SHAW CONTRACT
	STYLE	SHIFT 0709V
	COLOR	EVOLVE 09504
	SIZE	9"X36" X 5MM THICK
	INSTALL	LARGE BOOKMATCH

RUBBER ATHLETIC FLOORING

RAF-1	MANUFACTURER	TARKETT
	STYLE	TRAINING (OMNISPORT)
	TEXTURE	HAMMERED
	COLOR	SORCERER'S WAND LIGHT
	SIZE	6.6' ROLL x 7.1MM THICK
	INSTALL	SAME DIRECTION
	COURT STRIPING	SEE A230M
RAF-2	MANUFACTURER	TARKETT
	STYLE	TRIUMPH SPORT FLOORING
	TEXTURE	HAMMERED
	COLOR	LUNAR EXPLORER LD7
	SIZE	23"X23" X 3/8" THICK
	INSTALL	UNDERLOCKING TILES

SHEET VINYL

SV-1	MANUFACTURER	ARMSTRONG
	STYLE	REJUVINATIONS AMBIGU
	COLOR	38503 ALCHEMY PRINCESS GRAY
	SIZE	6' 7" X 82' ROLL
	SEAMS	HEAT WELD WITH MATCHING COLOR WELD ROD

BASE

PRB-1	MANUFACTURER	JOHNSONITE
	STYLE	WALLBASE - "INFLECTION"
	COLOR	PEBBLE 32
	SIZE	5 1/4" HIGH
B-1	STYLE	1"X4" WOOD
	COLOR	PAINTED P-5
RB-1	MANUFACTURER	JOHNSONITE
	STYLE	TRADITIONAL WALLBASE
	COLOR	PEBBLE 32
	SIZE	4" HIGH WITH TOE
TB-1	COVED TILE BASE	
	MANUFACTURER	CROSSVILLE
	STYLE	JAVA JOINT
	COLOR	FRENCH PRESS JAV05
	SIZE	6" X 12" (SQUARE TOP)

WALL FINISH SELECTIONS

WALL TILE

WT-1	MANUFACTURER	CROSSVILLE
	STYLE	JAVA JOINT
	COLOR	FRENCH PRESS JAV05
	SIZE	12"X24"
	GROUT	LATICRETE
	GROUT COLOR	DUSTY GREY 60
WT-2	MANUFACTURER	KAISER TILE
	STYLE	MERGE
	COLOR	CEDAR MATTE
	SIZE	4"X24"
	GROUT	LATICRETE
	GROUT COLOR	DUSTY GREY 60
WT-3	MANUFACTURER	DALITILE
	STYLE	FESTIVA
	COLOR	WILLOW QF42
	SIZE	3"X6"
	GROUT	LATICRETE
	GROUT COLOR	DUSTY GREY 60

PAINT

P-1	MANUFACTURER	DUNN EDWARDS
	COLOR	SHADY DEC774
	FINISH	EGGSHELL/SATIN
	LOCATION	FIELD
P-2	MANUFACTURER	DUNN EDWARDS
	COLOR	IGLOO DEW379
	FINISH	EGGSHELL/SATIN
	LOCATION	CEILINGS
P-2E	MANUFACTURER	DUNN EDWARDS
	COLOR	IGLOO DEW379
	FINISH	EPOXY
	LOCATION	BATHROOM/SHOWER CEILINGS
P-3E	MANUFACTURER	DUNN EDWARDS
	COLOR	METAL FRINGE DET626
	FINISH	EPOXY
	LOCATION	INTERIOR DOORS AND FRAMES
P-4	MANUFACTURER	DUNN EDWARDS
	COLOR	WINTER MORN DET617
	FINISH	EGGSHELL/SATIN
	LOCATION	ACCENT
P-5	MANUFACTURER	DUNN EDWARDS
	COLOR	PEWTER PATTER DET627
	FINISH	EGGSHELL/SATIN
	LOCATION	ACCENT
P-6	MANUFACTURER	DUNN EDWARDS
	COLOR	STONE MASON DET615
	FINISH	SATIN/EGGSHELL
	LOCATION	ACCENT
P-7	MANUFACTURER	DUNN EDWARDS
	COLOR	CHARCOAL BRIQUETTE DET601
	FINISH	SATIN/EGGSHELL
	LOCATION	ACCENT
P-8	MANUFACTURER	DUNN EDWARDS
	COLOR	WILDERNESS DE6236
	FINISH	SATIN/EGGSHELL
	LOCATION	ACCENT
P-9	MANUFACTURER	DUNN EDWARDS
	COLOR	GRAY MONUMENT DET602
	FINISH	SATIN/EGGSHELL
	LOCATION	ACCENT
P-10	MANUFACTURER	DUNN EDWARDS
	COLOR	WEATHERED BLUE DET560
	FINISH	SATIN/EGGSHELL
	LOCATION	ACCENT
P-11	MANUFACTURER	DUNN EDWARDS
	COLOR	DEEP RESERVOIRDE5874
	FINISH	SATIN/EGGSHELL
	LOCATION	ACCENT

WALL PROTECTION

WP-1	MANUFACTURER	LUMICOR
	STYLE	LUMIFORM
	COLOR	KAURI + PEPPERDUST OPAQUE
	TEXTURE	SATIN
	THICKNESS	0.050"
	VINYL TRIM	PEPPERDUST PER MANUFACTURER STANDARDS
	INSTALL	SEE INTERIOR ELEVATIONS
WP-2	MANUFACTURER	KOROSEAL
	STYLE	FUSION DIGITALLY PRINTED PROTECTIVE WALLCOVERING
	IMAGE	CUSTOM
	TEXTURE	MASA-S.
	THICKNESS	0.040"
	SHEET SIZE	48" X 120" MAX
	SEAMS	1/16" GAP WITH MATCHING CAULK
	INSTALL	SEE INTERIOR ELEVATIONS
	LEAD TIME	12 WEEKS
WP-3	MANUFACTURER	LUMICOR
	STYLE	LUMIFORM
	COLOR	BELLA PEARL WHITE OPAQUE
	TEXTURE	SATIN
	THICKNESS	.050"
	TRIM	MANUFACTURER TOP CAP TRIM COLOR TO MATCH
	INSTALL	48" ABOVE BASE
WP-4	MANUFACTURER	DIAMOND LIFE GEAR
	PRODUCT	SLATWALL MX
	COLOR/FINISH	SLATS- DIAMOND PLATE GROOVES- BRUSHED ALUMINUM
FRP-1	MANUFACTURER	MARLITE
	STYLE	ARTIZAN FRP
	COLOR	CATALINA
	TEXTURE	SMOOTH FINISH
	TRIM	COLOR MATCH - STANDARD MANUFACTURER TRIM
	INSTALL	SEE INTERIOR ELEVATIONS

ACOUSTICAL WALL TILE

AWP-1	MANUFACTURER	ASI ARCHITECTURAL
	STYLE	AUDITION 8
	COLOR	WALNUT VENEER
	SIZE	CUSTOM
	GRID	T&G PLANK
	TRIM	MANUFACTURER TRIM TO MATCH
AWP-2	MANUFACTURER	FILZFELT
	STYLE	AKUSTIKA 10
	COLOR	170 ASCHE
	SIZE	2'6" X 3'6"
	EDGE	BEVELED
	INSTALL	SEE 17/A980
AWT-3	MANUFACTURER	FILZFELT
	STYLE	HEX BLOCK
	COLOR	533 INDIGO 25% 150 WEIB 50% 415 SCHILF 25%
	PATTERN	RANDOM, SEE INTERIOR ELEVATIONS
AWT-4	MANUFACTURER	LUMICOR KUVIO
	STYLE	ROLL
	COLOR	RIPSTOP 50% SHIMMER ASH 30% OXIDE 20%
	SIZE	10"X11.54"
	PATTERN	RANDOM, SEE INTERIOR ELEVATIONS

CEILING FINISH SELECTIONS

ACOUSTICAL CEILING TILE

ACT-1	MANUFACTURER	ARMSTRONG
	STYLE	ULTIMA HIGH NRC - BEVELED TEGULAR
	COLOR	WHITE
	SIZE	24"X24"
	GRID	9/16"
	GRID COLOR	WHITE
ACT-2	MANUFACTURER	ARMSTRONG
	STYLE	KITCHEN ZONE
	COLOR	WHITE
	SIZE	24"X24"
	GRID	9/16"
	GRID COLOR	WHITE

WOOD CEILING PANELS

WCP-1	MANUFACTURER	AMRSTRONG
	PRODUCT	WOODWORKS LINEAR VENEER
	COLOR	NATURAL VARIATIONS - WALNUT
	SIZE	5 1/4" X 96"
WCP-2	MANUFACTURER	STRUCTURLAM
	STYLE	CROSSLAM CLT
	FINISH	STAIN TO MATCH AWP-1

MISC. FINISH SELECTIONS

CORNER GUARD

CG-1	MANUFACTURER	C/S ACROVYN
	STYLE	CO-8 / SCO-8
	FINISH	STAINLESS STEEL
	SIZE	FULL HEIGHT, UNO

PLASTIC LAMINATE

PL-1	MANUFACTURER	WILSONART
	COLOR	LOWELL ASH 7994-38
	FINISH	VELVET FINISH
	LOCATION	ALL DOORS, LOWER CASEWORK
PL-2	MANUFACTURER	WILSONART
	COLOR	CASUAL LINEN 4944-38
	FINISH	VELVET FINISH
	LOCATION	ALL UPPER CASEWORK

SOLID SURFACE MATERIAL

SSM-1	MANUFACTURER	CORIAN
	COLOR	NEUTRAL AGGREGATE
	EDGE	DOUBLE BEVELED
	LOCATION	ALL COUNTERTOP SURFACES, U.N.O.
SSM-2	MANUFACTURER	INPRO
	STYLE	BIOPRISM
	COLOR	GLACIER P9055
	LOCATION	ALL SHOWER WALLS
	SEAMS	HARD SEAMS - FINISH TO MATCH
PANEL	EDGE	BEVELED
SSM-3	MANUFACTURER	INPRO
	STYLE	BIOPRISM
	COLOR	QUARRY P9705
	LOCATION	ALL SHOWER PANS

TOILET/SHOWER PARTITIONS

PRT-1	MANUFACTURER	SCRANTON PRODUCTS
	PRODUCT	HINY HIDERS
	COLOR	SHALE ORANGE PEEL
	FINISH	TEXTURED
	LOCATION	ALL TOILET ROOM STALLS AND SHOWER PARTITIONS WHERE SHOWN.

WINDOW COVERING

WS-1	MANUFACTURER	MECHO SYSTEM
	STYLE	1900 SERIES (5% OPEN)
	COLOR	1903 BROOME
WS-2	MANUFACTURER	MECHO SYSTEM
	STYLE	0100 SERIES (BLACKOUT)
	COLOR	0118 WINTER

WOOD PANELS

WD-1	MANUFACTURER	VINTAGE TIMBERWORKS
	PRODUCT	SURFACED RECLAIMED WOOD PLANKS
	SPECIES	REDWOOD
	INSTALL	STAGGERED JOINTS
	STAIN	CLEAR FINISH

FINISH SCHEDULE

NUMBER	NAME	FLOORING	BASE	WALLS NORTH	WALLS EAST	WALLS SOUTH	WALLS WEST	WALL PROTECTION	CORNER GUARD	CEILING FINISH	SOFFIT FINISH	WINDOW COVERING	ROOM FINISH REMARKS
ADMINISTRATION BUILDING													
A101	RECEPTION	LVT-1,2	PRB-1	P-10	P-10, P-6	P-10	P-10	-	-	ACT-1	P-6	-	4
A102	DATA	C-1	RB-1	P-1	P-1	P-1	P-1	-	-	P-1	-	-	
A103	CONFERENCE	CPT-2	PRB-1	P-9	AWP-2	P-9	P-9	-	-	WCP-1/P-9	P-9	WS-1,2	8,16, 23
A104	HALL	LVT-1,2	PRB-1	P-1	P-1	P-1, P-6	P-1	-	CG-1	WCP-1,ACT-1/P-1	P-1		4,6,8
A105	OFFICE #4	CPT-1	RB-1	P-4	P-4	P-8	P-4	-	-	ACT-1	-	WS-1	16
A106	RECORDS	CPT-1	RB-1	P-1	P-1	P-1	P-1	-	-	ACT-1	-	WS-1	16
A107	JANITOR	SV-1	SV-1	P-1E	P-1E	P-1E	P-E1	FRP-1	-	P-1E	-	-	2,3
A108	BREAK ROOM	LVT-2	RB-1	P-1	P-1, P-10	P-10	P-1	-	CG-1	ACT-1	P-10	WS-1	16
A109	CLOSET	LVT-1	RB-1	P-1	P-1	P-1	P-1	-	-	P-1	-	-	
A110	ELEC	C-1	RB-1	P-1	P-1	P-1	P-1	-	-	P-1	-	-	
A111	UNISEX RESTROOM	FT-1	TB-1	WT-1,2,3/P-4	WT-1,2,3	WT-1,2,3/P-4	WT-1,2,3/P-4	-	-	P-2	-	-	5
A112	UNISEX RESTROOM	FT-1	TB-1	WT-1,2,3/P-4	WT-1,2,3/P-4	WT-1,2,3/P-4	WT-1,2,3	-	-	P-2	-	-	5
A113	OFFICE #3	CPT-1	RB-1	P-8	P-4	P-4	P-4	-	-	ACT-1	-	WS-1	16
A114	DISTRICT DIRECTOR	CPT-2	RB-1	P-7	P-4	P-4	P-7	-	-	ACT-1	-	WS-1	16
A115	BUSINESS SERVICES	CPT-2	RB-1	P-7	P-7	P-4	P-4	-	-	ACT-1	-	WS-1	16
A116	OFFICE #2	CPT-1	RB-1	P-8	P-4	P-4	P-4	-	-	ACT-1	-	WS-1	16
A117	COPY	LVT-1	RB-1	P-1	P-1	P-1	P-1	-	-	ACT-1	P-1	WS-1	16
A118	OFFICE #1	CPT-1	RB-1	P-8	P-4	P-4	P-4	-	-	ACT-1	-	WS-1	16
A119	OPEN OFFICE	CPT-1/LVT-1,2	PRB-1	P-1	P-10	P-10	P-6	-	-	ACT-1	P-6	WS-1	4,16
A120	F.S.	C-1	RB-1	P-1	P-1	P-1	P-1	-	-	P-1	-	-	
COMET BUILDING													
C101	MEN'S DORM	LVT-1	RB-1	P-4	P-4	P-4	P-4	-	CG-1	P-2	-	-	
C102	BED #3	CPT-3	RB-1	P-4	AWP-2, P-9	P-9	AWP-2, P-9	-	CG-1	P-2	-	WS-1,2	15,16
C103	BED #2	CPT-3	RB-1	P-4	AWP-2, P-9	P-9	AWP-2, P-9	-	CG-1	P-2	-	WS-1,2	15,16
C104	BED #1	CPT-3	RB-1	P-4	AWP-2, P-9	P-9	AWP-2, P-9	-	CG-1	P-2	-	WS-1,2	15,16
C105	RESTROOM	FT-1	TB-1	WT-1,2,3/P-4/SSM-2	WT-1,2,3/P-4	WT-1,2,3/P-4	WT-1,2,3/P-4	-	-	P-2E	WT-1	-	5, 17
C106	SHOWER	SSM-3, FT-1	TB-1	SSM-2	SSM-2	PRT-1	SSM-2	-	-	P-2E	-	-	
C107	SHOWER	SSM-3, FT-1	TB-1	SSM-2	SSM-2	PRT-1	SSM-2	-	-	P-2E	-	-	
C108	SHOWER	SSM-3, FT-1	TB-1	SSM-2	SSM-2	PRT-1	SSM-2	-	-	P-2E	-	-	
C109	SHOWER	SSM-3, FT-1	TB-1	SSM-2	SSM-2	PRT-1	SSM-2	-	-	P-2E	-	-	
C110	JAN.	SV-1	SV-1	P-1E	P-1E	P-1E	P-1E	FRP-1	-	P-2E	-	-	2,3
C111	ELEC.	C-1	RB-1	P-1	P-1	P-1	P-1	-	-	P-1	-	-	
C112	JAN.	SV-1	SV-1	P-1E	P-1E	P-1E	P-1E	FRP-1	-	P-2E	-	-	2,3
C113	F.S. / MECH.	C-1	RB-1	P-1	P-1	P-1	P-1	-	-	P-1	-	-	
C114	RESTROOM	FT-1	TB-1	WT-1,2,3/P-4/SSM-2	WT-1,2,3/P-4	WT-1,2,3/P-4	WT-1,2,3/P-4	-	-	P-2E	WT-1	-	5, 17
C115	SHOWER	SSM-3, FT-1	TB-1	SSM-2	SSM-2	PRT-1	SSM-2	-	-	P-2E	-	-	
C116	SHOWER	SSM-3, FT-1	TB-1	SSM-2	SSM-2	PRT-1	SSM-2	-	-	P-2E	-	-	
C117	SHOWER	SSM-3, FT-1	TB-1	SSM-2	SSM-2	PRT-1	SSM-2	-	-	P-2E	-	-	
C118	SHOWER	SSM-3, FT-1	TB-1	SSM-2	SSM-2	PRT-1	SSM-2	-	-	P-2E	-	-	
C119	WOMEN'S DORM	LVT-1	RB-1	P-4	P-4	P-4	P-4	-	CG-1	P-2	-	-	
C120	BED #4	CPT-3	RB-1	P-4	AWP-2, P-9	P-9	AWP-2, P-9	-	CG-1	P-2	-	WS-1,2	15,16
C121	BED#5	CPT-3	RB-1	P-4	AWP-2, P-9	P-9	AWP-2, P-9	-	CG-1	P-2	-	WS-1,2	15,16
EDUCATION BUILDING													
E101	HALLWAY	LVT-1,2	PRB-1, TB-1	P-1	P-1, WT-1,2	P-1, WT-1,2	P-1, WT-1,2	-	CG-1	ACT-1, WCP-1	P-1	-	4,8
E102	STORAGE	CPT-2	RB-1	P-1	P-1	P-1	P-1	-	-	P-1	-	-	
E103	TRAINING ROOM 3	CPT-2	PRB-1	P-11	-	P-4	P-4	-	CG-1	ACT-1	P-4	WS-1, 2	16
E104	TRAINING ROOM 2	CPT-2	PRB-1	P-11	P-4	P-4	-	-	CG-1	ACT-1	P-4	WS-1, 2	16
E105	STORAGE	CPT-2	RB-1	P-1	P-1	P-1	P-1	-	-	P-1	-	-	
E106	JAN.	SV-1	SV-1	P-1E	P-1E	P-1E	P-1E	FRP-1	-	P-1E	-	-	2,3
E107	TRAINING ROOM 1	CPT-2	PRB-1	P-11	P-4	P-4	P-4	-	-	ACT-1	-	WS-1, 2	16
E108	STORAGE	CPT-2	RB-1	P-1	P-1	P-1	P-1	-	-	P-1	-	-	
E109	HALL.	LVT-1	PRB-1	-	P-1	P-1	P-1	-	-	ACT-1	P-1	-	-
E110	OFFICE	CPT-1	RB-1	P-4	P-8	P-4	P-4	-	-	ACT-1	-	WS-1	16
E111	OFFICE	CPT-1	RB-1	P-4	P-8	P-4	P-4	-	-	ACT-1	-	WS-1	16
E112	OFFICE	CPT-1	RB-1	P-4	P-8	P-4	P-4	-	-	ACT-1	-	WS-1	16
E113	COMPUTER LAB	CPT-2	PRB-1	P-6	AWT-3	P-6	P-6	-	-	ACT-1	-	WS-1, 2	14,16
E114	STORAGE	CPT-2	RB-1	P-1	P-1	P-1	P-1	-	-	P-1	-	-	
E115	WOMEN'S VEST.	FT-1	TB-1	WT-1,2,3/P-4	WT-1,2,3/P-4	WT-1,2,3/P-4	WT-,1,2,3/P-4	-	-	P-2	-	-	5
E116	WOMEN'S RESTROOM	FT-1	TB-1	WT-1,2,3/P-4	WT-1,2,3/P-4	WT-1,2,3/P-4	WT-,1,2,3/P-4	-	-	P-2	WT-1	-	5, 17
E117	DATA/ ELEC.	C-1	RB-1	P-1	P-1	P-1	P-1	-	-	P-1	-	-	
E118	MEN'S VEST.	FT-1	TB-1	WT-1,2,3/P-4	WT-1,2,3/P-4	WT-1,2,3/P-4	WT-,1,2,3/P-4	-	-	P-2	-	-	5
E119	MEN'S RESTROOM	FT-1	TB-1	WT-1,2,3/P-4	WT-1,2,3/P-4	WT-1,2,3/P-4	WT-,1,2,3/P-4	-	-	P-2	WT-1	-	5, 17
E120	F.S./MECH.	C-1	RB-1	P-1	P-1	P-1	P-1	-	-	P-1	-	-	
E121	LIBRARY	CPT-2	PRB-1	P-7	AWP-2/P-7	P-7	AWP-2/P-7	-	-	ACT-1	-	WS-1	15,16
E122	HALL	LVT-1,2	PRB-1	P-1	P-1	P-1	P-1		CG-1	ACT-1	P-1		4
E123	COMET	CPT-1	PRB-1	P-1	P-1	P-1	P-1	-	-	ACT-1	-	WS-1	16
E124	STORAGE	LVT-1	RB-1	P-1	P-1	P-1	P-1	-	-	P-1	-	-	
E125	RESTROOM	FT-1	TB-1	WT-1,2,3/P-4	WT-1,2,3/P-4	WT-1,2,3/P-4	WT-,1,2,3	-	-	P-2	-	-	5
E126	RECRUIT	CPT-1	PRB-1	P-4	P-4	P-4	P-8	-	-	ACT-1	-	WS-1	16
E127	STORAGE	LVT-1	RB-1	P-1	P-1	P-1	P-1			P-1			
HOUSING - MEN - BUILDING 1													
HM101	CORRIDOR	LVT-1	PRB-1	P-1	P-1	P-1	P-1	-	CG-1	P-2	-	-	
HM102	4 PERSON ROOM	CPT-3, LVT-1	PRB-1	P-4	AWP-2, P-7	P-4,7	AWP-2, P-7	-	CG-1	P-2	-	WS-1,2	15,16
HM103	4 PERSON ROOM	CPT-3, LVT-1	PRB-1	P-4	AWP-2, P-7	P-4,7	AWP-2, P-7	-	CG-1	P-2	-	WS-1,2	15,16
HM104	4 PERSON ROOM	CPT-3, LVT-1	PRB-1	P-4	AWP-2, P-7	P-4,7	AWP-2, P-7	-	CG-1	P-2	-	WS-1,2	15,16
HM105	ELEC.	C-1	RB-1	P-1	P-1	P-1	P-1	-	-	P-1	-	-	
HM106	RESTROOM	FT-1, SSM-3	TB-1	WT-1,2,3	WT-1,2,3/P-4/SSM-2	WT-1,2,3/P-4 /SSM-2	WT-1,2,3/P-4 /SSM-2	-	-	P-2E	-	-	5
HM107	2 PERSON ROOM	CPT-3, LVT-1	PRB-1	AWP-2, P-7, P-4	P-7	AWP-2, P-7	P-4	-	CG-1	P-2	-	WS-1,2	15,16
HM108	JAN.	SV-1	SV-1	P-1E	P-1E	P-1E	P-1E	FRP-1	-	P-2E	-	-	2,3
HM109	MECH.	C-1	RB-1	P-1	P-1	P-1	P-1	-	-	P-1	-	-	
HM110	RESTROOM	FT-1	TB-1	WT-1,2,3/P-4/SSM-2	WT-1,2,3/P-4	WT-1,2,3/P-4	WT-1,2,3/P-4	-	-	P-2E	WT-1	-	5,17
HM111	SHOWER	FT-1, SSM-3	TB-1	SSM-2	SSM-2	PRT-1	SSM-2	-	-	P-2E	-	-	
HM112	SHOWER	FT-1, SSM-3	TB-1	SSM-2	SSM-2	PRT-1	SSM-2	-	-	P-2E	-	-	
HM113	SHOWER	FT-1, SSM-3	TB-1	SSM-2	SSM-2	PRT-1	SSM-2	-	-	P-2E	-	-	
HM114	SHOWER	FT-1, SSM-3	TB-1	SSM-2	SSM-2	PRT-1	SSM-2	-	-	P-2E	-	-	
HM115	2 PERSON ROOM	CPT-3, LVT-1	PRB-1	P-7	AWP-2, P-7	P-4	AWP-2, P-7	-	-	P-2	-	WS-1,2	15,16
HOUSING - MEN - BUILDING 2													
HM201	HALLWAY	LVT-1	PRB-1	P-1	P-1	P-1	P-1	-	CG-1	P-2	-	-	
HM202	4 PERSON ROOM	CPT-3, LVT-1	PRB-1	P-4	AWP-2,7	P-4,7	AWP-2, P-7	-	CG-1	P-2	-	WS-1,2	15,16
HM203	4 PERSON ROOM	CPT-3, LVT-1	PRB-1	P-4	AWP-2,7	P-4,7	AWP-2, P-7	-	CG-1	P-2	-	WS-1,2	15,16
HM204	4 PERSON ROOM	CPT-3, LVT-1	PRB-1	P-4	AWP-2,7	P-4,7	AWP-2, P-7	-	CG-1	P-2	-	WS-1,2	15,16
HM205	ELEC.	C-1	RB-1	P-1	P-1	P-1	P-1	-	-	P-1	-	-	
HM206	RESTROOM	FT-1, SSM-3	TB-1	WT-1,2,3	WT-1,2,3/P-4/SSM-2	WT-1,2,3/P-4 /SSM-2	WT-1,2,3/P-4 /SSM-2	-	-	P-2E	-	-	5
HM207	2 PERSON ROOM	CPT-3, LVT-1	PRB-1	P-7	AWP-2, P-4,7	P-4	AWP-2, P-7	-	CG-1	P-2	-	WS-1,2	15,16
HM208	JAN.	SV-1	SV-1	P-1E	P-1E	P-1E	P-1E	FRP-1	-	P-2E	-	-	2,3
HM209	MECH.	C-1	RB-1	P-1	P-1	P-1	P-1	-	-	P-1	-	-	
HM210	RESTROOM	FT-1	TB-1	WT-1,2,3/P-4/SSM-2	WT-1,2,3/P-4	WT-1,2,3/P-4	WT-1,2,3/P-4	-	-	P-2E	WT-1	-	5, 17
HM211	SHOWER	FT-1, SSM-3	TB-1	SSM-2	SSM-2	PRT-1	SSM-2	-	-	P-2E	-	-	
HM212	SHOWER	FT-1, SSM-3	TB-1	SSM-2	SSM-2	PRT-1	SSM-2	-	-	P-2E	-	-	
HM213	SHOWER	FT-1, SSM-3	TB-1	SSM-2	SSM-2	PRT-1	SSM-2	-	-	P-2E	-	-	
HM214	SHOWER	FT-1, SSM-3	TB-1	SSM-2	SSM-2	PRT-1	SSM-2	-	-	P-2E	-	-	
HM215	2 PERSON ROOM	CPT-3, LVT-1	PRB-1	P-7	AWP-2, P-7	P-4	AWP-2, P-7	-	-	P-2	-	WS-1,2	15,16

GENERAL FINISH NOTES

A. SEE SPECIFICATIONS FOR ACCEPTABLE EQUAL MANUFACTURERS AND PRODUCTS. SEE SPECIFICATIONS FOR SUBSTITUTION PROCEDURES WHICH REQUIRE WRITTEN APPROVAL FROM ARCHITECT.
B. RESILIENT WALL BASE SHALL BE ROLL GOODS IN THE SPECIFIED HEIGHT AND PROFILE.
C. THIS SHEET TO BE USED IN CONJUNCTION WITH THE FINISH SCHEDULE, FURNISHINGS MANUAL, AND PROJECT MANUAL.
D. FOR ALL PRODUCTS INSTALLED, NOTE INDUSTRY STANDARDS AND MANUFACTURER SPECIFICATIONS FOR INSTALLATION.
E. DO NOT PAINT ANY FACTORY FINISHED ITEMS.
F. MISCELLANEOUS METAL, I.E. RETURN AND AIR SUPPLY GRILLES,EXPANSION JOINTS, ETC. SHALL BE PAINTED TO MATCH THE ADJACENT WALL SURFACE.
G. ALL INTERIOR FINISHES SHALL MEET CLASS A FLAME SPREAD RATING OF25 OR LESS AND SHALL HAVE A SMOKE FOR WD-1: PER TABLE 803.13, NOTE ,A CLASS C INTERIOR FINISH MATERIALS SHALL BE PERMITTED FOR WAINSCOTTING OR PANELING OF NOT MORE THAN 1,000 SQ. FT. OF APPLIED SURFACE AREA WHERE APPLIED DIRECTLY TO CONCUMBUSTIBLE BASE AND FIREBLOCKED AS REQUIRED BY SECTION 803.15.1
H. DEVELOPMENT OF 250 OR LESS.
I. ALL FLOOR REDUCER / THRESHOLDS SHALL BE LOCATED AT THE CENTER LINE OF DOOR WHEN IN THE CLOSED POSITION AND MEET ACCESSIBILITY REQUIREMENTS.
J. ALL INTERIOR FLOORING SHALL MEET CLASS I AND CLASS II.
K. CAULK ALL DOORS, FRAMES AND MILLWORK. COLOR TO MATCH ADJACENT SURFACE.
L. ALL SURFACES TO BE PAINTED SHALL RECEIVE TWO COATS. PREP SURFACE PER PAINT MANUFACTURER'S RECOMMENDATIONS. ALL METAL TRIM AND SASH SHALL RECEIVE TWO COATS OF PAINT OVER MANUFACTURER RECOMMENDED PRIMER COAT. ALL APPLICATIONS SHALL USE MANUFACTURER RECOMMENDED EXTENDER AGENTS IN ORDER TO REDUCE BRUSH MARKS.
M. ALL COLORS SHALL BE AS PER THE FINISH SCHEDULE UNLESS WRITTEN APPROVAL FROM THE ARCHITECT / DESIGNER.
N. THE WORD "CLEAR" INDICATES CRITICAL DIMENSIONS FOR ACCESSIBILITY EQUIPMENT OR FUNCTIONAL CLEARANCES FROM FACE OF FINISH TO FACE OF FINISH.
O. THRESHOLDS AT DOORWAYS AND TRANSITION STRIPS SHALL NOT EXCEED 1/2" IN HEIGHT. RAISED THRESHOLDS AND FLOOR LEVEL CHANGES AT ACCESSIBLE DOORWAYS SHALL BE BEVELED WITH A SLOPE NO GREATER THAN 1:2.
P. FRAME OF DOOR LITE SHALL BE PAINTED TO MATCH ADJACENT DOOR FINISH.
Q. GROUT JOINT FROM FLOOR TILE TO WALL TILE TO ALIGN WHERE POSSIBLE.

ROOM FINISH REMARKS

1. INSTALL WAINSCOT 96" ABOVE FINISH FLOOR.
2. INSTALL WAINSCOT 48" ABOVE INTEGRAL COVED BASE.
3. USE MATCHING COLOR WELDING ROD AT ALL FLOORING SEAMS
4. SEE ID FINISH FLOOR PLANS FOR FLOOR FINISH LAYOUT PATTERNS
5. SEE SHEET A980 DETAILS 3, 4 FOR WALL TILE LAYOUTS
6. CEILING BEAMS TO BE PAINTED P-1
7. SEE DETAIL 5/A980 FOR AWP-1 LAYOUT
8. SEE RCP FOR CEILING MATERIAL LOCATIONS
9. INSTALL WAINSCOT 78" ABOVE FINISH FLOOR
10. SEE CASEWORK DETAIL FOR FINISH MATERIAL.
11. 5/8" APA RATED ACX PLYWOOD. STACKED JOINTS AND SCREWED TO FRAMING W/ GALV. WOOD SCREWS @ 12" O.C. PAINT P-5. SEE INTERIOR ELEVATIONS FOR HEIGHT OF PLYWOOD.
12. SEE INTERIOR ELEVATIONS FOR WD-1 LAYOUT. PER TABLE 803.13 NOTE A, CLASS C INTERIOR FINISH MATERIAL SHALL BE PERMITTED FOR WAINSCOTTING OR PANELING OF NOT MORE THAN 1,000 SQ. FT. APPLIED SURFACE AREA WHERE APPLIED DIRECTLY TO A NONCOMBUSTABLE BASE AND FIREBLOCKED AS REQUIRED BY SECTION 803.15.1
13. CORNER GUARDS TO MATCH HEIGHT OF FRP OR PLYWOOD. SEE INTERIOR ELEVATIONS.
14. SEE SHEET A980 DETAIL 8 FOR ACOUSTIC WALL TILE LAYOUT
15. SEE SHEET A980 DETAIL 16 FOR ACOUSTIC WALL PANEL LAYOUT.
16. ALL WINDOW SHADES TO BE MANUAL UNLESS NOTED OTHERWISE. SEE REFLECTED CEILING PLANS FOR LOCATION & TYPE OF SHADE.
17. WALL TILE, WT-1 TO WRAP UNDER SIDE OF SOFFIT AT SINK ALCOVE.
18. PAINTED GYPSUM BOARD WALL FINISH ABOVE PLYWOOD WAINSCOT. PAINT TO BE P-7. WOOD TRUSSES, ROOF FRAMING, AND ROOF SHEATHING TO REMAIN NATURAL WOOD FINISH.
19. INSTALL WAINSCOT 96" ABOVE BASE.
20. CEILING IS OPEN TO UNDERSIDE OF STRUCTURAL CEILING (CROSS LAMINATED TIMBER PANELS). INTERIOR FINISH OF CLT PANEL CEILING IS FINISHED PER SCHEDULE.
21. STAIN TRUSSES TO MATCH AWP-1.
22. SEE DETAIL 19/A980 FOR ACOUSTICAL WALL TILE LAYOUT.
23. SEE SHEET 20/A980 FOR ACOUSTICAL WALL PANEL LAYOUT.

IDENTIFICATION STAMP
DIV. OF THE STATE ARCHITECT
APP: 02-118630 INC:
REVIEWED FOR
SS ☐ FLS ☐ ACS ☑
DATE: 04/13/2021

OFFICE OF THE STATE FIRE MARSHAL
APPROVED FIRE AND PANIC ONLY
Approval of this plan does not authorize or approve any omission or deviation from applicable regulations. Final approval is subject to field inspection. One set of approved plans shall be available on the project site at all times.
PERMIT NO.: 20-N-2332-CP
REVIEWED BY: LITO CATAYLO, OSFM
DATE: 4/ / /2021

GENERAL SERVICES
Department of General Services
State of California
Real Estate Services Division
Project Management & Development Branch
707 Third Street, Suite 4-105
West Sacramento, California 95605

NICHOLS MELBURG & ROSSETTO
ARCHITECTS + ENGINEERS
300 Knollcrest Drive
Redding, CA. 96002
(530) 222-3300 (530) 222-3538 FAX
http://www.nmrdesign.com

Copyright © 2020
All ideas, designs, arrangements and plans indicated or represented by this drawing are owned by, and the property of, NICHOLS, MELBURG and ROSSETTO and were created, evolved and developed for use on, and in conjunction with, the specified project. None of such ideas, designs, arrangements or plans shall be used by, or disclosed to any person, firm or corporation for any purpose whatsoever without the written permission of NICHOLS, MELBURG and ROSSETTO.

LICENSE STAMPS

LICENSED ARCHITECT KYLE MATTI C 27504 REN. 10/31/21 STATE OF CALIFORNIA

CONSULTANT

DRAWING STATUS
CONSTRUCTION DOCUMENTS

ISSUE

No.	Date	Description
1	10/20/2020	INITIAL PLAN REVIEW
2	01/22/2021	AGENCY RESUBMITTAL
3	03/22/2021	AGENCY RESUBMITTAL

If drawing is not 30" x 42" it is a reduced print

PROJECT
RESIDENTIAL CENTER, UKIAH: REPLACEMENT OF EXISTING RESIDENTIAL CENTER
440 EAST HILL ROAD
WILLITS, CALIFORNIA 95490
MENDOCINO COUNTY
CALIFORNIA CONSERVATION CORP

Supervisor	Designed	Drawn
KJM	DMH	Author

DSA Application No.
02-118630

SHEET TITLE
FINISH SCHEDULE

DGS Project Number: 000000000001826
NMR Project Number: 18-6456

Reference North: NORTH
Sheet Scale: As indicated
Sheet Number: A900

ISSUE DATE
July 9, 2021

Plot Date: 3/19/2021 11:20:33 AM
File Name: BIM 360://CCC Willits Residential Center/A_CCC-WRC-COMMON.rvt

FINISH SCHEDULE

NUMBER	NAME	FLOORING	BASE	WALLS				WALL PROTECTION	CORNER GUARD	CEILING FINISH	SOFFIT FINISH	WINDOW COVERING	ROOM FINISH REMARKS
				NORTH	EAST	SOUTH	WEST						
HOUSING - MEN - BUILDING 3													
HM301	HALLWAY	LVT-1	PRB-1	P-1	P-1	P-1	P-1	-	CG-1	P-2	-	-	
HM302	4 PERSON ROOM	CPT-3, LVT-1	PRB-1	P-4	AWP-2, P-7	P-4,7	AWP-2, P-7	-	CG-1	P-2	-	WS-1,2	15,16
HM303	4 PERSON ROOM	CPT-3, LVT-1	PRB-1	P-4	AWP-2, P-7	P-4,7	AWP-2, P-7	-	CG-1	P-2	-	WS-1,2	15,16
HM304	4 PERSON ROOM	CPT-3, LVT-1	PRB-1	P-4	AWP-2, P-7	P-4,7	AWP-2, P-7	-	CG-1	P-2	-	WS-1,2	15,16
HM305	ELEC.	C-1	RB-1	P-1	P-1	P-1	P-1	-	-	P-1	-	-	
HM306	RESTROOM	FT-1, SSM-3	TB-1	WT-1,2,3	WT-1,2,3/P-4/SSM-2	WT-1,2,3/P-4 /SSM-2	WT-1,2,3/P-4 /SSM-2	-	-	P-2E	-	-	5
HM307	2 PERSON ROOM	CPT-3, LVT-1	PRB-1	AWP-2, P-4,7	P-7	AWP-2, P-7	P-4	-	CG-1	P-2	-	WS-1,2	15,16
HM308	JAN.	SV-1	SV-1	P-1E	P-1E	P-1E	P-1E	FRP-1	-	P-2E	-	-	2,3
HM309	MECH.	C-1	RB-1	P-1	P-1	P-1	P-1	-	-	P-1	-	-	
HM310	RESTROOM	FT-1	TB-1	WT-1,2,3/P-4/SSM-2	WT-1,2,3/P-4	WT-1,2,3/P-4	WT-1,2,3/P-4	-	-	P-2E	WT-1	-	5
HM311	SHOWER	FT-1, SSM-3	TB-1	SSM-2	SSM-2	PRT-1	SSM-2	-	-	P-2E	-	-	
HM312	SHOWER	FT-1, SSM-3	TB-1	SSM-2	SSM-2	PRT-1	SSM-2	-	-	P-2E	-	-	
HM313	SHOWER	FT-1, SSM-3	TB-1	SSM-2	SSM-2	PRT-1	SSM-2	-	-	P-2E	-	-	
HM314	SHOWER	FT-1, SSM-3	TB-1	SSM-2	SSM-2	PRT-1	SSM-2	-	-	P-2E	-	-	
HM315	2 PERSON ROOM	CPT-3, LVT-1	PRB-1	P-7	AWP-2, P-7	P-4	AWP-2, P-7	-	-	P-2	-	WS-1,2	15,16
HOUSING - WOMEN - BUILDING 4													
HW401	CORRIDOR	LVT-1	PRB-1	P-1	P-1	P-1	P-1	-	CG-1	P-2	-	-	
HW402	4 PERSON ROOM	CPT-3, LVT-1	PRB-1	P-4	AWP-2, P-10	P-4,P-10	AWP-2, P-10	-	CG-1	P-2	-	WS-1,2	15,16
HW403	4 PERSON ROOM	CPT-3, LVT-1	PRB-1	P-4	AWP-2, P-10	P-4,P-10	AWP-2, P-10	-	CG-1	P-2	-	WS-1,2	15,16
HW404	4 PERSON ROOM	CPT-3, LVT-1	PRB-1	P-4	AWP-2, P-10	P-4,P-10	AWP-2, P-10	-	CG-1	P-2	-	WS-1,2	15,16
HW405	ELEC.	C-1	RB-1	P-1	P-1	P-1	P-1	-	-	P-1	-	-	
HW406	RESTROOM	FT-1, SSM-3	TB-1	WT-,1,2,3	WT-1,2,3/P- 4/SSM-2	WT-1,2,3/P-4 /SSM-2	WT-1,2,3/P- 4/SSM-2	-	-	P-2E	-	-	5
HW407	2 PERSON ROOM	CPT-3, LVT-1	PRB-1	AWP-2, P-10, P-4	P-10	AWP-2, P-10	P-4	-	CG-1	P-2	-	WS-1,2	15,16
HW408	JAN.	SV-1	SV-1	P-1E	P-1E	P-1E	P-1E	FRP-1	-	P-2E	-	-	2,3
HW409	F.S. / MECH.	C-1	RB-1	P-1	P-1	P-1	P-1	-	-	P-1	-	-	
HW410	RESTROOM	FT-1	TB-1	WT-,1,2,3/P-4/SSM-2	WT-1,2,3/P-4	WT-1,2,3/P-4	WT-1,2,3/P-4	-	-	P-2E	WT-1	-	5, 17
HW411	SHOWER	FT-1, SSM-3	TB-1	SSM-2	SSM-2	PRT-1	SSM-2	-	-	P-2E	-	-	
HW412	SHOWER	FT-1, SSM-3	TB-1	SSM-2	SSM-2	PRT-1	SSM-2	-	-	P-2E	-	-	
HW413	SHOWER	FT-1, SSM-3	TB-1	SSM-2	SSM-2	PRT-1	SSM-2	-	-	P-2E	-	-	
HW414	SHOWER	FT-1, SSM-3	TB-1	SSM-2	SSM-2	PRT-1	SSM-2	-	-	P-2E	-	-	
HW415	2 PERSON ROOM	CPT-3, LVT-1	PRB-1	P-10	AWP-2, P-10	P-4	AWP-2, P-10	-	-	P-2	-	WS-1,2	15,16
HOUSING - WOMEN - BUILDING 5													
HW501	HALLWAY	LVT-1	PRB-1	P-1	P-1	P-1	P-1	-	CG-1	P-2	-	-	
HW502	4 PERSON ROOM	CPT-3, LVT-1	PRB-1	P-4	AWP-2, P-10	P-4, P-10	AWP-2, P-10	-	CG-1	P-2	-	WS-1,2	15,16
HW503	4 PERSON ROOM	CPT-3, LVT-1	PRB-1	P-4	AWP-2, P-10	P-4, P-10	AWP-2, P-10	-	CG-1	P-2	-	WS-1,2	15,16
HW504	4 PERSON ROOM	CPT-3, LVT-1	PRB-1	P-4	AWP-2, P-10	P-4, P-10	AWP-2, P-10	-	CG-1	P-2	-	WS-1,2	15,16
HW505	ELEC.	C-1	RB-1	P-1	P-1	P-1	P-1	-	-	P-1	-	-	
HW506	RESTROOM	FT-1, SSM-3	TB-1	WT-,1,2,3	WT-1,2,3/P- 4/SSM-2	WT-1,2,3/P-4 /SSM-2	WT-1,2,3/P- 4/SSM-2	-	-	P-2E	-	-	5
HW507	2 PERSON ROOM	CPT-3, LVT-1	PRB-1	AWP-2, P-4, P-10	P-10	AWP-2, P-10	P-4	-	CG-1	P-2	-	WS-1,2	15,16
HW508	JAN.	SV-1	SV-1	P-1E	P-1E	P-1E	P-1E	FRP-1	-	P-2E	-	-	2,3
HW509	F.S. / MECH.	C-1	RB-1	P-1	P-1	P-1	P-1	-	-	P-1	-	-	
HW510	RESTROOM	FT-1	TB-1	WT-,1,2,3/P-4/SSM-2	WT-1,2,3/P-4	WT-1,2,3/P-4	WT-1,2,3/P-4	-	-	P-2E	WT-1	-	5, 17
HW511	SHOWER	FT-1, SSM-3	TB-1	SSM-2	SSM-2	PRT-1	SSM-2	-	-	P-2E	-	-	
HW512	SHOWER	FT-1, SSM-3	TB-1	SSM-2	SSM-2	PRT-1	SSM-2	-	-	P-2E	-	-	
HW513	SHOWER	FT-1, SSM-3	TB-1	SSM-2	SSM-2	PRT-1	SSM-2	-	-	P-2E	-	-	
HW514	SHOWER	FT-1, SSM-3	TB-1	SSM-2	SSM-2	PRT-1	SSM-2	-	-	P-2E	-	-	
HW515	2 PERSON ROOM	CPT-3, LVT-1	PRB-1	P-10	AWP-2, P-10	P-4	AWP-2, P-10	-	-	P-2	-	WS-1,2	15,16
HOUSING - WOMEN - BUILDING 6													
HW601	HALLWAY	LVT-1	PRB-1	P-1	P-1	P-1	P-1	-	CG-1	P-2	-	-	
HW602	4 PERSON ROOM	CPT-3, LVT-1	PRB-1	P-4	AWP-2, P-10	P-4, P-10	AWP-2, P-10	-	CG-1	P-2	-	WS-1,2	15,16
HW603	4 PERSON ROOM	CPT-3, LVT-1	PRB-1	P-4	AWP-2, P-10	P-4, P-10	AWP-2, P-10	-	CG-1	P-2	-	WS-1,2	15,16
HW604	4 PERSON ROOM	CPT-3, LVT-1	PRB-1	P-4	AWP-2, P-10	P-4, P-10	AWP-2, P-10	-	CG-1	P-2	-	WS-1,2	15,16
HW605	ELEC.	C-1	RB-1	P-1	P-1	P-1	P-1	-	-	P-1	-	-	
HW606	RESTROOM	FT-1, SSM-3	TB-1	WT-,1,2,3	WT-1,2,3/P- 4/SSM-2	WT-1,2,3/P-4 /SSM-2	WT-1,2,3/P- 4/SSM-2	-	-	P-2E	-	-	5
HW607	2 PERSON ROOM	CPT-3, LVT-1	PRB-1	AWP-2, P-4, P-10	P-10	AWP-2, P-10	P-4	-	CG-1	P-2	-	WS-1,2	15,16
HW608	JAN.	SV-1	SV-1	P-1E	P-1E	P-1E	P-1E	FRP-1	-	P-2E	-	-	2,3
HW609	F.S. / MECH.	C-1	RB-1	P-1	P-1	P-1	P-1	-	-	P-1	-	-	
HW610	RESTROOM	FT-1	TB-1	WT-,1,2,3/P-4/SSM-2	WT-1,2,3/P-4	WT-1,2,3/P-4	WT-1,2,3/P-4	-	-	P-2E	WT-1	-	5, 17
HW611	SHOWER	FT-1, SSM-3	TB-1	SSM-2	SSM-2	PRT-1	SSM-2	-	-	P-2E	-	-	
HW612	SHOWER	FT-1, SSM-3	TB-1	SSM-2	SSM-2	PRT-1	SSM-2	-	-	P-2E	-	-	
HW613	SHOWER	FT-1, SSM-3	TB-1	SSM-2	SSM-2	PRT-1	SSM-2	-	-	P-2E	-	-	
HW614	SHOWER	FT-1, SSM-3	TB-1	SSM-2	SSM-2	PRT-1	SSM-2	-	-	P-2E	-	-	
HW615	2 PERSON ROOM	CPT-3, LVT-1	RB-1	P-10	AWP-2, P-10	P-4	AWP-2, P-10	-	-	P-2	-	WS-1,2	15,16
MULTI-PURPOSE BUILDING													
M101	DINING HALL	C-2	PRB-1	P-4, WP-1	P-11	P-11	P-4, WP-1	-	CG-1	WCP-1, P-2	P-2	WS-1	9, 10, 16
M102	HALL	C-2	PRB-1, TB-1	P-1	P-1	P-1, WT-1,2	P-1	WP-1	CG-1	ACT-1, P-2	P-1	-	9
M103	JANITOR	SV-1	SV-1	P-1E	P-1E	P-1E	P-1E	FRP-1	-	P-1E	-	-	2,3
M104	MEN'S VESTIBULE	FT-1	TB-1	WT-1,2,3/P-4	WT-1,2,3/P-4	WT-1,2,3/P-4	WT-,1,2,3/P-4	-	-	P-2	-	-	5
M105	MEN'S LOCKERS	FT-1	TB-1	WT-1,2,3/P-4	WT-1,2,3/P-4	SSM-2	WT-,1,2,3/P-4	-	-	P-2E	-	-	5
M106	MEN'S SHOWER 1	FT-1,SSM-3	TB-1	PRT-1	SSM-2	SSM-2	SSM-2	-	-	P-2E	-	-	
M107	MEN'S SHOWER 2	FT-1,SSM-3	TB-1	PRT-1	SSM-2	SSM-2	SSM-2	-	-	P-2E	-	-	
M108	MEN'S SHOWER 3	FT-1,SSM-3	TB-1	PRT-1	SSM-2	SSM-2	SSM-2	-	-	P-2E	-	-	
M109	MEN'S RESTROOM	FT-1	TB-1	WT-1,2,3/P-4	WT-1,2,3/P-4	WT-1,2,3/P-4	WT-,1,2,3/P-4	-	-	P-2	WT-1	-	5, 17
M110	WOMEN'S VESTIBULE	FT-1	TB-1	WT-1,2,3/P-4	WT-1,2,3/P-4	WT-1,2,3/P-4	WT-,1,2,3/P-4	-	-	P-2	-	-	5
M111	WOMEN'S RESTROOM	FT-1	TB-1	WT-1,2,3/P-4	WT-1,2,3/P-4	WT-1,2,3/P-4	WT-,1,2,3/P-4	-	-	P-2	WT-1	-	5, 17
M112	WOMEN'S SHOWER 3	FT-1,SSM-3	TB-1	PRT-1	SSM-2	SSM-2	SSM-2	-	-	P-2E	-	-	
M113	WOMEN'S SHOWER 2	FT-1,SSM-3	TB-1	PRT-1	SSM-2	SSM-2	SSM-2	-	-	P-2E	-	-	
M114	WOMEN'S SHOWER 1	FT-1,SSM-3	TB-1	PRT-1	SSM-2	SSM-2	SSM-2	-	-	P-2E	-	-	
M115	WOMEN'S LOCKERS	FT-1	TB-1	WT-1,2,3/P-4	WT-1,2,3/P-4	SSM-2	WT-,1,2,3/P-4	-	-	P-2E	-	-	5
M116	ELEC.	C-1	RB-1	P-1	P-1	P-1	P-1	-	-	P-1	-	-	
M117	MECH	C-1	RB-1	P-1	P-1	P-1	P-1	-	-	P-1	-	-	
M118	STORAGE	C-1	RB-1	P-1	P-1	P-1	P-1	-	-	P-1	-	-	
M119	MULTI-USE COURT	RAF-1	PRB-1	P-7,WD-1,AWP-1	AWP-1, WP-2	P-7, AWP-1, WD-1	P-1, AWP-1	-	-	WCP-2	-	WS-1/2	7, 12, 16, 20, 21
M120	HALL	C-2	PRB-1	P-4	P-4	-	P-4	WP-1	-	P-2	-	-	9
M121	SERVICE	EPY-1	EPY-1	P-1E	P-1E	P-1E	P-1E	FRP-1	-	ACT-2	P-1E	-	10, 19
M122	HALL	C-2	PRB-1	P-4	P-4	-	P-4	WP-1	-	P-2	-	-	9
M123	KITCHEN	EPY-1	EPY-1	P-1E	P-1E	P-1E	P-1E	FRP-1	CG-1	ACT-2	P-1E	-	10, 19
M124	OFFICE	EPY-1	EPY-1	P-1	P-1	P-1	P-1	-	-	ACT-1	-	WS-1	16
M125	REFRIGERATOR	EPY-1	EPY-1	PRE-FAB	PRE-FAB	PRE-FAB	PRE-FAB	-	-	PRE-FAB	-	-	
M126	DISHWASH	EPY-1	EPY-1	P-1E	P-1E	P-1E	P-1E	FRP-1	CG-1	ACT-2	-	-	19
M127	RECEIVING	EPY-1	EPY-1	P-1E	P-1E	P-1E	P-1E	FRP-1	CG-1	ACT-2	-	-	19
M128	DRY STORAGE	EPY-1	EPY-1	P-1E	P-1E	P-1E	P-1E	FRP-1	CG-1	ACT-2	-	-	19
M129	FREEZER	PRE-FAB	PRE-FAB	PRE-FAB	PRE-FAB	PRE-FAB	PRE-FAB	-	-	PRE-FAB	-	-	
M130	JAN.	EPY-1	EPY-1	P-1E	P-1E	P-1E	P-1E	FRP-1	-	P-1E	-	-	2
M131	RESTROOM	EPY-1	EPY-1	P-1E	P-1E	P-1E	P-1E	FRP-1	-	P-1E	-	-	2
M132	SPIKE COOLER	EPY-1	EPY-1	P-1E	P-1E	P-1E	P-1E	FRP-1	CG-1	P-1E	-	-	19
M133	SERVICE ALCOVE	C-2	PRB-1	P-4	P-4	P-4	P-4	WP-1	-	ACT-2	-	-	9

GENERAL FINISH NOTES

A. SEE SPECIFICATIONS FOR ACCEPTABLE EQUAL MANUFACTURERS AND PRODUCTS. SEE SPECIFICATIONS FOR SUBSTITUTION PROCEDURES WHICH REQUIRE WRITTEN APPROVAL FROM ARCHITECT.
B. RESILIENT WALL BASE SHALL BE ROLL GOODS IN THE SPECIFIED HEIGHT AND PROFILE.
C. THIS SHEET TO BE USED IN CONJUNCTION WITH THE FINISH SCHEDULE, FURNISHINGS MANUAL, AND PROJECT MANUAL.
D. FOR ALL PRODUCTS INSTALLED, NOTE INDUSTRY STANDARDS AND MANUFACTURER SPECIFICATIONS FOR INSTALLATION.
E. DO NOT PAINT ANY FACTORY FINISHED ITEMS.
F. MISCELLANEOUS METAL, I.E. RETURN AND AIR SUPPLY GRILLES,EXPANSION JOINTS, ETC. SHALL BE PAINTED TO MATCH THE ADJACENT WALL SURFACE.
G. ALL INTERIOR FINISHES SHALL MEET CLASS A FLAME SPREAD RATING OF25 OR LESS AND SHALL HAVE A SMOKE FOR WD-1: PER TABLE 803.13, NOTE .A CLASS C INTERIOR FINISH MATERIALS SHALL BE PERMITTED FOR WAINSCOTTING OR PANELING OF NOT MORE THAN 1,000 SQ. FT. OF APPLIED SURFACE AREA WHERE APPLIED DIRECTLY TO CONCUMBUSTIBLE BASE AND FIREBLOCKED AS REQUIRED BY SECTION 803.15.1
H. DEVELOPMENT OF 250 OR LESS.
I. ALL FLOOR REDUCER / THRESHOLDS SHALL BE LOCATED AT THE CENTER LINE OF DOOR WHEN IN THE CLOSED POSITION AND MEET ACCESSIBILITY REQUIREMENTS.
J. ALL INTERIOR FLOORING SHALL MEET CLASS I AND CLASS II.
K. CAULK ALL DOORS, FRAMES AND MILLWORK. COLOR TO MATCH ADJACENT SURFACE.
L. ALL SURFACES TO BE PAINTED SHALL RECEIVE TWO COATS. PREP SURFACE PER PAINT MANUFACTURER'S RECOMMENDATIONS. ALL METAL TRIM AND SASH SHALL RECEIVE TWO COATS OF PAINT OVER MANUFACTURER RECOMMENDED PRIMER COAT. ALL APPLICATIONS SHALL USE MANUFACTURER RECOMMENDED EXTENDER AGENTS IN ORDER TO REDUCE BRUSH MARKS.
M. ALL COLORS SHALL BE AS PER THE FINISH SCHEDULE UNLESS WRITTEN APPROVAL FROM THE ARCHITECT / DESIGNER.
N. THE WORD "CLEAR" INDICATES CRITICAL DIMENSIONS FOR ACCESSIBILITY EQUIPMENT OR FUNCTIONAL CLEARANCES FROM FACE OF FINISH TO FACE OF FINISH.
O. THRESHOLDS AT DOORWAYS AND TRANSITION STRIPS SHALL NOT EXCEED 1/2" IN HEIGHT. RAISED THRESHOLDS AND FLOOR LEVEL CHANGES AT ACCESSIBLE DOORWAYS SHALL BE BEVELED WITH A SLOPE NO GREATER THAN 1:2.
P. FRAME OF DOOR LITE SHALL BE PAINTED TO MATCH ADJACENT DOOR FINISH.
Q. GROUT JOINT FROM FLOOR TILE TO WALL TILE TO ALIGN WHERE POSSIBLE.

ROOM FINISH REMARKS

1. INSTALL WAINSCOT 96" ABOVE FINISH FLOOR.
2. INSTALL WAINSCOT 48" ABOVE INTEGRAL COVED BASE.
3. USE MATCHING COLOR WELDING ROD AT ALL FLOORING SEAMS
4. SEE ID FINISH FLOOR PLANS FOR FLOOR FINISH LAYOUT PATTERNS
5. SEE SHEET A980 DETAILS 3, 4 FOR WALL TILE LAYOUTS
6. CEILING BEAMS TO BE PAINTED P-1
7. SEE DETAIL 5/A980 FOR AWP-1 LAYOUT
8. SEE RCP FOR CEILING MATERIAL LOCATIONS
9. INSTALL WAINSCOT 78" ABOVE FINISH FLOOR
10. SEE CASEWORK DETAIL FOR FINISH MATERIAL.
11. 5/8" APA RATED ACX PLYWOOD. STACKED JOINTS AND SCREWED TO FRAMING W/ GALV. WOOD SCREWS @ 12" O.C. PAINT P-5. SEE INTERIOR ELEVATIONS FOR HEIGHT OF PLYWOOD.
12. SEE INTERIOR ELEVATIONS FOR WD-1 LAYOUT. PER TABLE 803.13 NOTE A, CLASS C INTERIOR FINISH MATERIAL SHALL BE PERMITTED FOR WAINSCOTTING OR PANELING OF NOT MORE THAN 1,000 SQ. FT. APPLIED SURFACE AREA WHERE APPLIED DIRECTLY TO A NONCOMBUSTABLE BASE AND FIREBLOCKED AS REQUIRED BY SECTION 803.15.1
13. CORNER GUARDS TO MATCH HEIGHT OF FRP OR PLYWOOD. SEE INTERIOR ELEVATIONS.
14. SEE SHEET A980 DETAIL 8 FOR ACOUSTIC WALL TILE LAYOUT
15. SEE SHEET A980 DETAIL 16 FOR ACOUSTIC WALL PANEL LAYOUT.
16. ALL WINDOW SHADES TO BE MANUAL UNLESS NOTED OTHERWISE. SEE REFLECTED CEILING PLANS FOR LOCATION & TYPE OF SHADE.
17. WALL TILE, WT-1 TO WRAP UNDER SIDE OF SOFFIT AT SINK ALCOVE.
18. PAINTED GYPSUM BOARD WALL FINISH ABOVE PLYWOOD WAINSCOT. PAINT TO BE P-7. WOOD TRUSSES, ROOF FRAMING, AND ROOF SHEATHING TO REMAIN NATURAL WOOD FINISH.
19. INSTALL WAINSCOT 96" ABOVE BASE.
20. CEILING IS OPEN TO UNDERSIDE OF STRUCTURAL CEILING (CROSS LAMINATED TIMBER PANELS). INTERIOR FINISH OF CLT PANEL CEILING IS FINISHED PER SCHEDULE.
21. STAIN TRUSSES TO MATCH AWP-1.
22. SEE DETAIL 19/A980 FOR ACOUSTICAL WALL TILE LAYOUT.
23. SEE SHEET 20/A980 FOR ACOUSTICAL WALL PANEL LAYOUT.

IDENTIFICATION STAMP
DIV. OF THE STATE ARCHITECT
APP: 02-118630 INC:
REVIEWED FOR
SS ☐ FLS ☐ ACS ☑
DATE: 04/13/2021

OFFICE OF THE STATE FIRE MARSHAL
APPROVED FIRE AND PANIC ONLY
Approval of this plan does not authorize or approve any omission or deviation from applicable regulations. Final approval is subject to field inspection. One set of approved plans shall be available on the project site at all times.
PERMIT NO. 20-N-2332-CP
REVIEWED BY: LEO CATAYLO, OSFM
DATE: 4 / /2021

DGS GENERAL SERVICES
Department of General Services
State of California
Real Estate Services Division
Project Management & Development Branch
707 Third Street, Suite 4-105
West Sacramento, California 95605

NICHOLS MELBURG & ROSSETTO ARCHITECTS + ENGINEERS
300 Knollcrest Drive
Redding, CA. 96002
(530) 222-3300 (530) 222-3538 FAX
http://www.nmrdesign.com

Copyright © 2020
All ideas, designs, arrangements and plans indicated or represented by this drawing are owned by, and the property of, NICHOLS, MELBURG and ROSSETTO and were created, evolved and developed for use on, and in conjunction with, the specified project. None of such ideas, designs, arrangements or plans shall be used by, or disclosed to any person, firm or corporation for any purpose whatsoever without the written permission of NICHOLS, MELBURG and ROSSETTO.

LICENSE STAMPS

LICENSED ARCHITECT KYLE MATTHEW ROSSETTO C-27504 REN. 10/31/21 STATE OF CALIFORNIA

CONSULTANT

DRAWING STATUS
CONSTRUCTION DOCUMENTS

ISSUE

No.	Date	Description
1	10/20/2020	INITIAL PLAN REVIEW
2	01/22/2021	AGENCY RESUBMITTAL
3	03/22/2021	AGENCY RESUBMITTAL

If drawing is not 30" x 42" it is a reduced print

PROJECT
RESIDENTIAL CENTER, UKIAH: REPLACEMENT OF EXISTING RESIDENTIAL CENTER
440 EAST HILL ROAD
WILLITS, CALIFORNIA 95490
MENDOCINO COUNTY
CALIFORNIA CONSERVATION CORP

Supervisor	Designed	Drawn
KJM	DMH	Author

DSA Application No.
02-118630

SHEET TITLE
FINISH SCHEDULE

DGS Project Number: 000000000001826
NMR Project Number: 18-6456

Reference North
Sheet Scale: As indicated
Sheet Number: A901

ISSUE DATE
July 9, 2021

Plot Date: 3/19/2021 11:26:41 AM
File Name: BIM A901 (C2C) Willits Residential Center\A_CCC-WRC-COMMON.rvt

FINISH SCHEDULE

NUMBER	NAME	FLOORING	BASE	WALLS NORTH	WALLS EAST	WALLS SOUTH	WALLS WEST	WALL PROTECTION	CORNER GUARD	CEILING FINISH	SOFFIT FINISH	WINDOW COVERING	ROOM FINISH REMARKS
RECREATION BUILDING													
R101	HALL	LVT-2	PRB-1, TB-1	P-1, WP-1	WD-1, WT-1,2	WD-1, WT-1,2	P-1, WD-1, WT-1,2	-	CG-1	ACT-1, WCP-1, P-1	P-1	-	8,9,12
R102	NIGHT WATCH	LVT-2	RB-1	P-1	P-11	P-1	P-1	-	-	ACT-1	-	WS-1	16
R103	LOUNGE	LVT-1,2	PRB-1	P-1, WP-1	P-1, WP-1	P-11	P-11, WD-1	-	CG-1	WCP-1,P-1	P-1	-	4,8,9,12
R104	GAMING	CPT-1	PRB-1	P-11	AWP-2	P-11	P-11	-	-	ACT-1	-	WS-1,2	16, 23
R105	HALL	LVT-2	PRB-1	P-1	P-1	-	P-1	WP-1	-	ACT-1	-	-	9
R106	VEST.	FT-1	TB-1	WT-1,2,3, P-4	WT-1,2,3, P-4	WT-1,2,3, P-4	WT-1,2,3, P-4	-	-	P-2	-	-	5
R107	MEN'S RESTROOM	FT-1	TB-1	WT-1,2,3, P-4	WT-1,2,3, P-4	WT-1,2,3, P-4	WT-1,2,3, P-4	-	-	P-2	WT-1	-	5, 17
R108	VEST.	FT-1	TB-1	WT-1,2,3, P-4	WT-1,2,3, P-4	WT-1,2,3, P-4	WT-1,2,3, P-4	-	-	P-2	-	-	5
R109	WOMEN'S RESTROOM	FT-1	TB-1	WT-1,2,3, P-4	WT-1,2,3, P-4	WT-1,2,3, P-4	WT-1,2,3, P-4	-	-	P-2	WT-1	-	5, 17
R110	LAUNDRY	SV-1	SV-1	P-1	P-1	P-1	P-1	FRP-1	-	ACT-1	-	WS-1	2,3,16
R111	JANITOR	SV-1	SV-1	P-1	P-1	P-1	P-1	FRP-1	-	P-1	-	-	2,3
R112	F.S.	C-1	RB-1	P-1	P-1	P-1	P-1		-	P-1	-	-	
R113	R.R.	FT-1	TB-1	WT-1,2,3, P-4	WT-1,2,3, P-4	WT-1,2,3	WT-1,2,3, P-4	-	-	P-2	-	-	5
R114	ELEC.	C-1	RB-1	P-1	P-1	P-1	P-1	-	-	P-1	-	-	
R115	MUSIC ROOM	CPT-1	PRB-1	P-10	P-10	P-10	P-10	AWP-2	-	ACT-1	-	WS-1	15,16
R116	READING/QUIET ROOM	CPT-1	PRB-1	P-7	P-7	P-7	P-7	AWP-2	-	ACT-1	-	WS-1	15,16
R118	CAB STORAGE	LVT-2	RB-1	P-1	P-1	P-1	P-1	-	-	ACT-1	-	-	
R119	TV ROOM	CPT-1	PRB-1	P-9	AWP-2	P-9	P-9	-	-	ACT-1	-	WS-1, 2	16, 23
R120	STORAGE	LVT-2	RB-1	P-1	P-1	P-1	P-1	-	-	P-1	-	-	
R121	WEIGHT ROOM	RAF-2	PRB-1	P-4, WP-3	P-4	P-4, WP-3	P-4, WP-3		-	ACT-1	-	WS-1	16, 23
R122	ACTIVITY AREA	LVT-1,2	PRB-1	P-1, WP-1	P-1, WP-1	P-1	AWT-4	-	CG-1	WCP-1	P-1	WS-1	9, 16, 22
WAREHOUSE BUILDING													
W101	HALL	C-1	B-1	P-1	P-1	P-1	P-1	P-5 PLY	CG-1	ACT-1		-	11, 13
W102	CREW STORAGE 1	C-1	-	P-5	P-5	P-5	P-5	P-5 PLY		P-2		-	1, 11
W103	CREW STORAGE 2	C-1	-	P-5	P-5	P-5	P-5	-		P-2		-	1, 11
W104	CREW STORAGE 3	C-1	-	P-5	P-5	P-5	P-5	-		P-2		-	1, 11
W105	SECURE STORAGE	C-1	-	P-5	P-5	P-5	P-5	-		P-2		-	1, 11
W106	AIR COMP	C-1	RB-1	P-1	P-1	P-1	P-1	-		EXP		-	
W107	ELEC./DATA	C-1	RB-1	P-1	P-1	P-1	P-1	-		EXP		-	
W108	SHOP MANAGER	LVT-1	RB-1	P-1	P-1	P-1	P-1	-		ACT-1		-	
W109	CREW STORAGE 4	C-1	-	P-5	P-5	P-5	P-5	P-5 PLY		P-2		-	1, 11
W110	CREW STORAGE 5	C-1	-	P-5	P-5	P-5	P-5	P-5 PLY		P-2		-	1, 11
W111	CREW STORAGE 6	C-1	-	P-5	P-5	P-5	P-5	P-5 PLY		P-2		-	1, 11
W112	STORAGE	C-1	B-1	P-5, FRP-1	P-7, FRP-1	P-6, FRP-1	P-5	P-5,7 PLY	CG-1	P-7		-	1, 10, 11, 13, 18
W113	RESTORATION STORAGE	C-1	-	P-7	P-7	P-7	P-7	P-5 PLY		P-7		-	1, 18
W114	GARAGE STORAGE	C-1	-	P-7	P-7	P-7	P-7	P-5 PLY		P-7		-	1, 11, 18
W115	WAREHOUSE DELIVERY	C-1	B-1	P-7	P-7	P-7	P-7	P-5 PLY	CG-1	P-7		-	1, 11, 18
W116	WAREHOUSE	C-1	B-1	P-7	P-7	P-7	P-7	P-5 PLY	-	P-7		-	11, 18
W117	SHOP/STAGING	C-1	B-1	P-5	P-5	P-7	-	P-5,7 PLY	CG-1	P-7		-	10, 11, 13, 18
W118	JANITOR	SV-1	SV-1	P-1E	P-1E	P-1E	P-1E	FRP-1		P-1E		-	2,3
W119	SHOWER/RESTROOM	SV-1, SSM-3	SV-1	P-1E, SSM-2	P-1E	P-1E, SSM-2	P-1E, SSM-2	FRP-1		P-2E		-	2,3
W120	RESTROOM	SV-1	SV-1	P-1	P-1	P-1	P-1	FRP-1		P-2		-	2,3
W121	ISSUE CENTER	C-1	RB-1	P-1	P-1	P-1	P-1	-		P-2		-	-
W122	LAUNDRY	C-1	RB-1	P-1	P-1	P-1	P-1	FRP-1	CG-1	P-2		WS-1	1,16
W123	SERVICE ROOM	C-1	RB-1	P-1	P-1	-	P-1	FRP-1		P-2		-	1
W124	CREW CONSERVATIONISTS	LVT-1	RB-1	P-4	P-9	P-9	P-4	-	CG-1	ACT-1		WS-1	16
W126	F.S. RISER	C-1	RB-1	P-1	P-1	P-1	P-1	-		EXP		-	
W127	W.H.	C-1	RB-1	P-1	P-1	P-1	P-1		-	EXP		-	

GENERAL FINISH NOTES

A. SEE SPECIFICATIONS FOR ACCEPTABLE EQUAL MANUFACTURERS AND PRODUCTS. SEE SPECIFICATIONS FOR SUBSTITUTION PROCEDURES WHICH REQUIRE WRITTEN APPROVAL FROM ARCHITECT.
B. RESILIENT WALL BASE SHALL BE ROLL GOODS IN THE SPECIFIED HEIGHT AND PROFILE.
C. THIS SHEET TO BE USED IN CONJUNCTION WITH THE FINISH SCHEDULE, FURNISHINGS MANUAL, AND PROJECT MANUAL.
D. FOR ALL PRODUCTS INSTALLED, NOTE INDUSTRY STANDARDS AND MANUFACTURER SPECIFICATIONS FOR INSTALLATION.
E. DO NOT PAINT ANY FACTORY FINISHED ITEMS.
F. MISCELLANEOUS METAL, I.E. RETURN AND AIR SUPPLY GRILLES,EXPANSION JOINTS, ETC. SHALL BE PAINTED TO MATCH THE ADJACENT WALL SURFACE.
G. ALL INTERIOR FINISHES SHALL MEET CLASS A FLAME SPREAD RATING OF25 OR LESS AND SHALL HAVE A SMOKE FOR WD-1: PER TABLE 803.13, NOTE ,A CLASS C INTERIOR FINISH MATERIALS SHALL BE PERMITTED FOR WAINSCOTTING OR PANELING OF NOT MORE THAN 1,000 SQ. FT. OF APPLIED SURFACE AREA WHERE APPLIED DIRECTLY TO CONCUMBUSTIBLE BASE AND FIREBLOCKED AS REQUIRED BY SECTION 803.15.1
H. DEVELOPMENT OF 250 OR LESS.
I. ALL FLOOR REDUCER / THRESHOLDS SHALL BE LOCATED AT THE CENTER LINE OF DOOR WHEN IN THE CLOSED POSITION AND MEET ACCESSIBILITY REQUIREMENTS.
J. ALL INTERIOR FLOORING SHALL MEET CLASS I AND CLASS II.
K. CAULK ALL DOORS, FRAMES AND MILLWORK. COLOR TO MATCH ADJACENT SURFACE.
L. ALL SURFACES TO BE PAINTED SHALL RECEIVE TWO COATS. PREP SURFACE PER PAINT MANUFACTURER'S RECOMMENDATIONS. ALL METAL TRIM AND SASH SHALL RECEIVE TWO COATS OF PAINT OVER MANUFACTURER RECOMMENDED PRIMER COAT. ALL APPLICATIONS SHALL USE MANUFACTURER RECOMMENDED EXTENDER AGENTS IN ORDER TO REDUCE BRUSH MARKS.
M. ALL COLORS SHALL BE AS PER THE FINISH SCHEDULE UNLESS WRITTEN APPROVAL FROM THE ARCHITECT / DESIGNER.
N. THE WORD "CLEAR" INDICATES CRITICAL DIMENSIONS FOR ACCESSIBILITY EQUIPMENT OR FUNCTIONAL CLEARANCES FROM FACE OF FINISH TO FACE OF FINISH.
O. THRESHOLDS AT DOORWAYS AND TRANSITION STRIPS SHALL NOT EXCEED 1/2" IN HEIGHT. RAISED THRESHOLDS AND FLOOR LEVEL CHANGES AT ACCESSIBLE DOORWAYS SHALL BE BEVELED WITH A SLOPE NO GREATER THAN 1:2.
P. FRAME OF DOOR LITE SHALL BE PAINTED TO MATCH ADJACENT DOOR FINISH.
Q. GROUT JOINT FROM FLOOR TILE TO WALL TILE TO ALIGN WHERE POSSIBLE.

ROOM FINISH REMARKS

1. INSTALL WAINSCOT 96" ABOVE FINISH FLOOR.
2. INSTALL WAINSCOT 48" ABOVE INTEGRAL COVED BASE.
3. USE MATCHING COLOR WELDING ROD AT ALL FLOORING SEAMS
4. SEE ID FINISH FLOOR PLANS FOR FLOOR FINISH LAYOUT PATTERNS
5. SEE SHEET A980 DETAILS 3, 4 FOR WALL TILE LAYOUTS
6. CEILING BEAMS TO BE PAINTED P-1
7. SEE DETAIL 5/A980 FOR AWP-1 LAYOUT
8. SEE RCP FOR CEILING MATERIAL LOCATIONS
9. INSTALL WAINSCOT 78" ABOVE FINISH FLOOR
10. SEE CASEWORK DETAIL FOR FINISH MATERIAL.
11. 5/8" APA RATED ACX PLYWOOD. STACKED JOINTS AND SCREWED TO FRAMING W/ GALV. WOOD SCREWS @ 12" O.C. PAINT P-5. SEE INTERIOR ELEVATIONS FOR HEIGHT OF PLYWOOD.
12. SEE INTERIOR ELEVATIONS FOR WD-1 LAYOUT. PER TABLE 803.13 NOTE A, CLASS C INTERIOR FINISH MATERIAL SHALL BE PERMITTED FOR WAINSCOTTING OR PANELING OF NOT MORE THAN 1,000 SQ. FT. APPLIED SURFACE AREA WHERE APPLIED DIRECTLY TO A NONCOMBUSTABLE BASE AND FIREBLOCKED AS REQUIRED BY SECTION 803.15.1
13. CORNER GUARDS TO MATCH HEIGHT OF FRP OR PLYWOOD. SEE INTERIOR ELEVATIONS.
14. SEE SHEET A980 DETAIL 8 FOR ACOUSTIC WALL TILE LAYOUT
15. SEE SHEET A980 DETAIL 16 FOR ACOUSTIC WALL PANEL LAYOUT.
16. ALL WINDOW SHADES TO BE MANUAL UNLESS NOTED OTHERWISE. SEE REFLECTED CEILING PLANS FOR LOCATION & TYPE OF SHADE.
17. WALL TILE, WT-1 TO WRAP UNDER SIDE OF SOFFIT AT SINK ALCOVE.
18. PAINTED GYPSUM BOARD WALL FINISH ABOVE PLYWOOD WAINSCOT. PAINT TO BE P-7. WOOD TRUSSES, ROOF FRAMING, AND ROOF SHEATHING TO REMAIN NATURAL WOOD FINISH.
19. INSTALL WAINSCOT 96" ABOVE BASE.
20. CEILING IS OPEN TO UNDERSIDE OF STRUCTURAL CEILING (CROSS LAMINATED TIMBER PANELS). INTERIOR FINISH OF CLT PANEL CEILING IS FINISHED PER SCHEDULE.
21. STAIN TRUSSES TO MATCH AWP-1.
22. SEE DETAIL 19/A980 FOR ACOUSTICAL WALL TILE LAYOUT.
23. SEE SHEET 20/A980 FOR ACOUSTICAL WALL PANEL LAYOUT.

IDENTIFICATION STAMP
DIV. OF THE STATE ARCHITECT
APP: 02-118630 INC:
REVIEWED FOR
SS ☐ FLS ☐ ACS ☑
DATE: 04/13/2021

OFFICE OF THE STATE FIRE MARSHAL
APPROVED FIRE AND PANIC ONLY
Approval of this plan does not authorize or approve any omission or deviation from applicable regulations. Final approval is subject to field inspection. One set of approved plans shall be available on the project site at all times.
PERMIT NO.: 20-N-2332-CP
REVIEWED BY: LITO CATAYLO, OSFM
DATE: 4/1/2021

GENERAL SERVICES
Department of General Services
State of California
Real Estate Services Division
Project Management & Development Branch
707 Third Street, Suite 4-105
West Sacramento, California 95605

NICHOLS MELBURG & ROSSETTO
ARCHITECTS + ENGINEERS
300 Knollcrest Drive
Redding, CA. 96002
(530) 222-3300 (530) 222-3538 FAX
http://www.nmrdesign.com

Copyright © 2020
All ideas, designs, arrangements and plans indicated or represented by this drawing are owned by, and the property of, NICHOLS, MELBURG and ROSSETTO and were created, evolved and developed for use on, and in conjunction with, the specified project. None of such ideas, designs, arrangements or plans shall be used by, or disclosed to any person, firm or corporation for any purpose whatsoever without the written permission of NICHOLS, MELBURG and ROSSETTO.

LICENSE STAMPS
LICENSED ARCHITECT
KYLE MATTI
C-27504
REN. 10/31/21
STATE OF CALIFORNIA

CONSULTANT

DRAWING STATUS
CONSTRUCTION DOCUMENTS

ISSUE

No.	Date	Description
1	10/20/2020	INITIAL PLAN REVIEW
2	01/22/2021	AGENCY RESUBMITTAL
3	03/22/2021	AGENCY RESUBMITTAL

If drawing is not 30" x 42" it is a reduced print

PROJECT
RESIDENTIAL CENTER, UKIAH: REPLACEMENT OF EXISTING RESIDENTIAL CENTER
440 EAST HILL ROAD
WILLITS, CALIFORNIA 95490
MENDOCINO COUNTY
CALIFORNIA CONSERVATION CORP

Supervisor KJM | Designed DMH | Drawn Author

DSA Application No.
02-118630

SHEET TITLE
FINISH SCHEDULE

DGS Project Number 000000000001826
NMR Project Number 18-6456

Reference North
NORTH

Sheet Scale
As indicated

Sheet Number
A902

ISSUE DATE
July 9, 2021

Plot Date: 3/19/2021 11:20:44 AM
File Name: BIM 360://CCC Willits Residential Center/A_CCC-WRC-COMMON.rvt

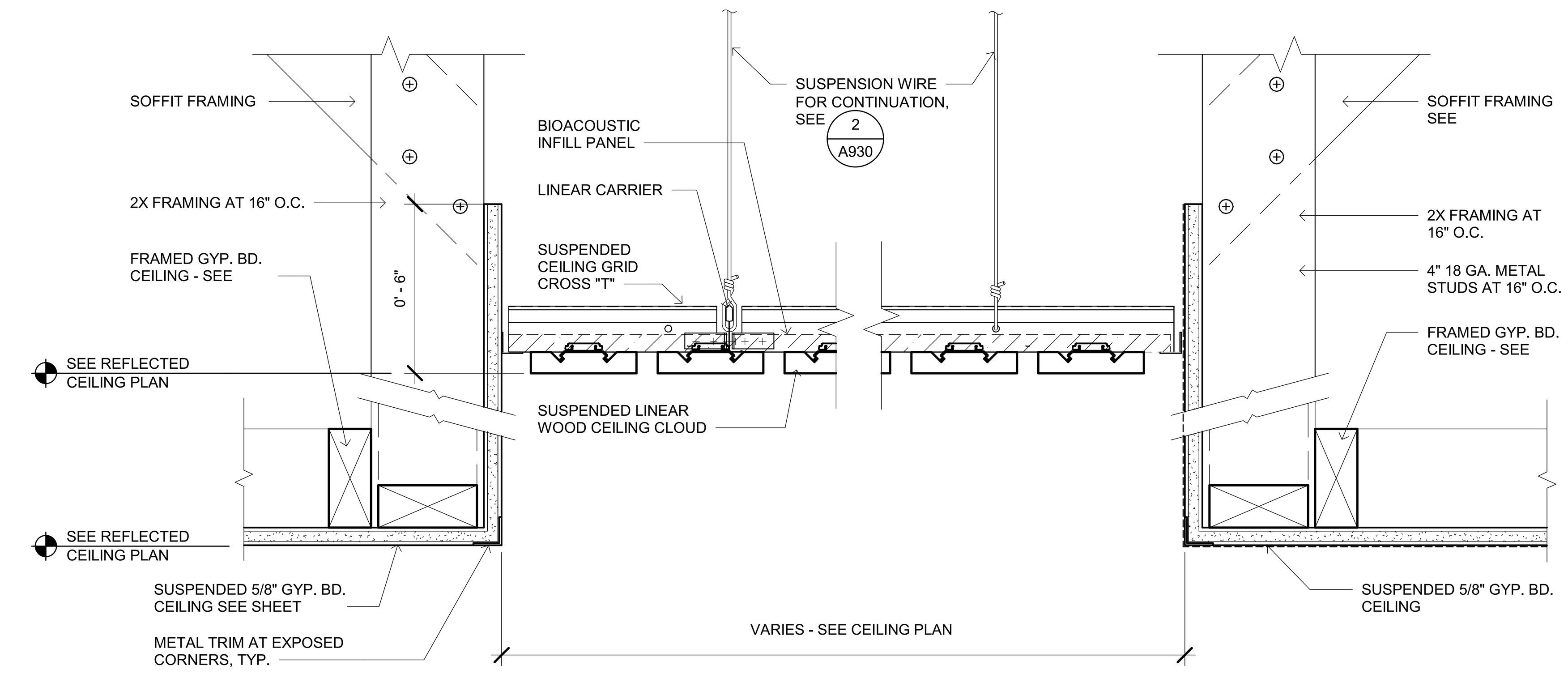

A930

STEPPED UP WOOD CEILING AT GYP. BD. ALT. (4)

SCALE: 3" = 1'-0"

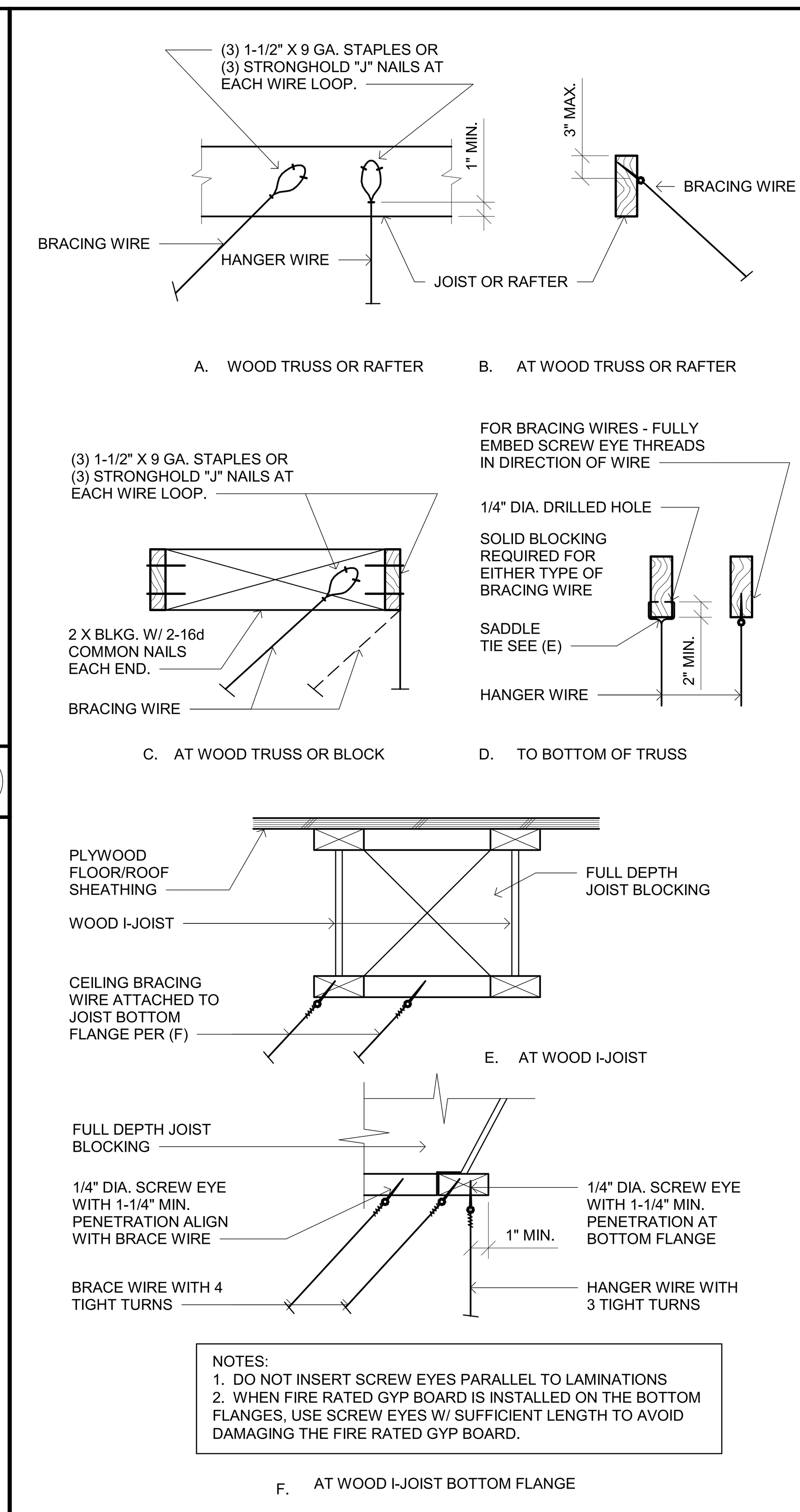

A930

SEISMIC BRACING WIRE ATTACHMENT (2)

SCALE: 1 1/2" = 1'-0"

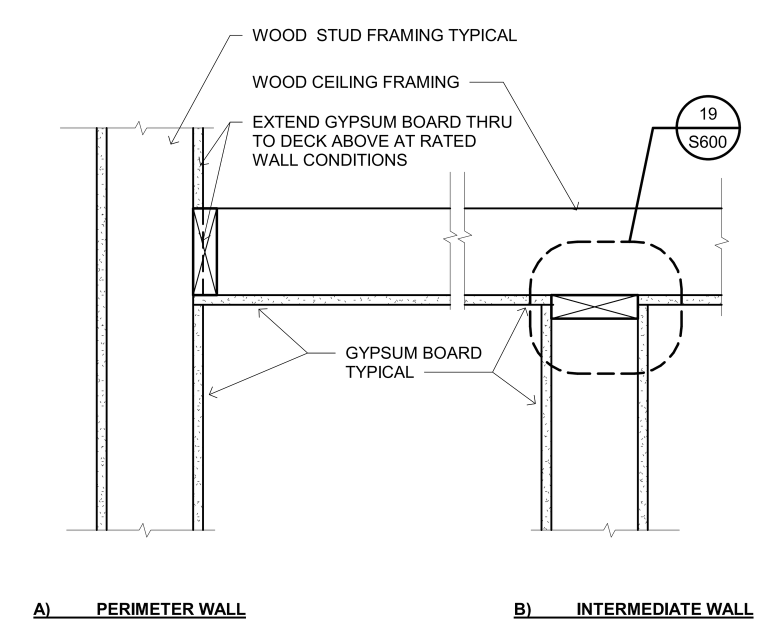

A930

TYPICAL GYPSUM BOARD CEILING (12)

SCALE: 1 1/2" = 1'-0"

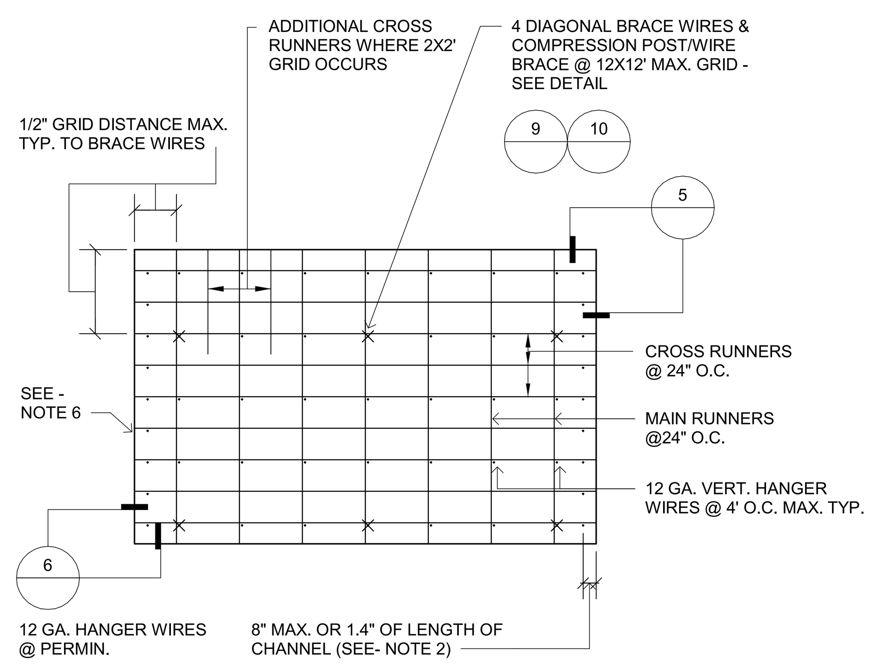

A930

DIAGRAMATIC ACOUSTICAL CEILING SUSPENSION SYSTEM (8)

SCALE: 1/2" = 1'-0"

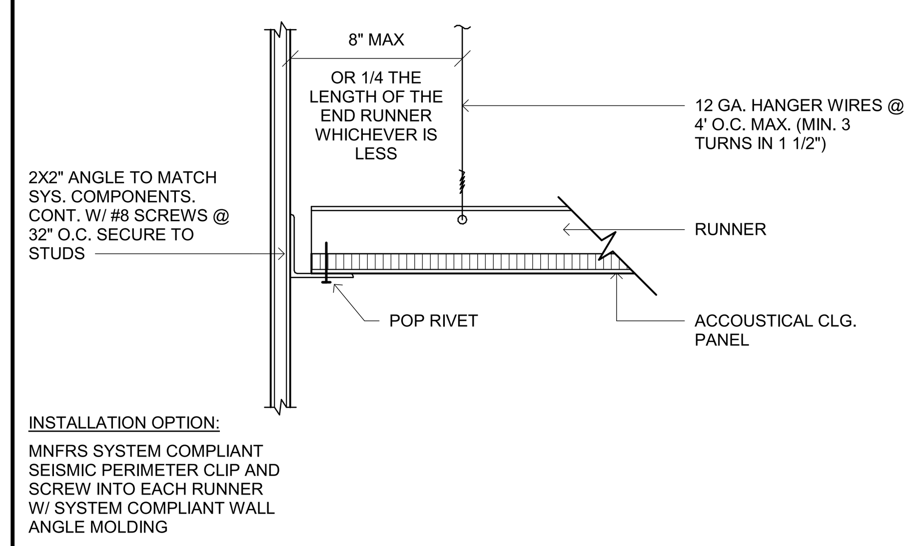

A930

SUSPENDED ACOUSTICAL CEILING FIXED CONDITION AT WALL (5)

SCALE: 3" = 1'-0"

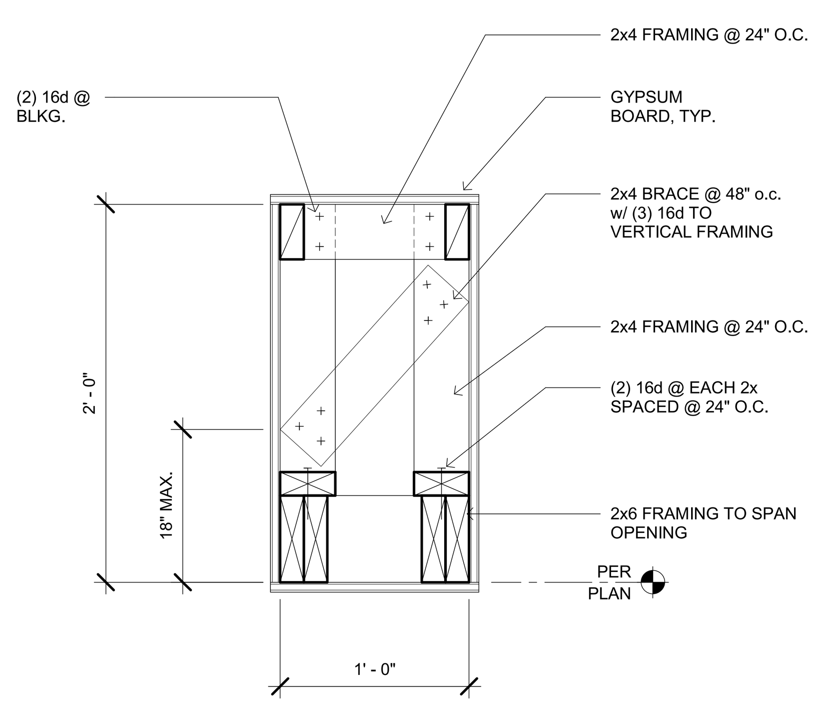

A930

SOFFIT AT CLERESTORY (13)

SCALE: 1 1/2" = 1'-0"

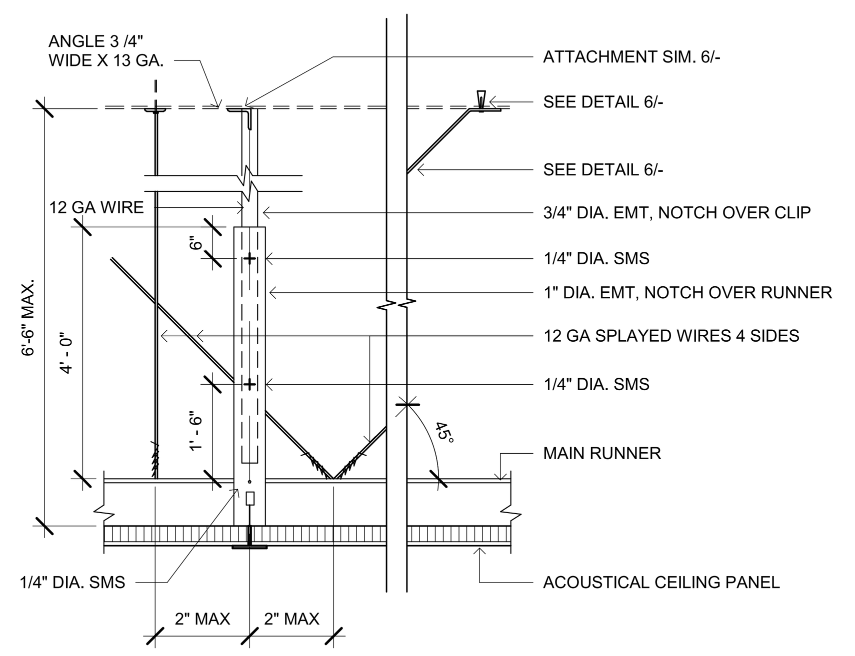

A930

SUSPENDED ACOUSTICAL CEILING COMPRESSION POST / WIRE BRACE (9)

SCALE: 1/2" = 1'-0"

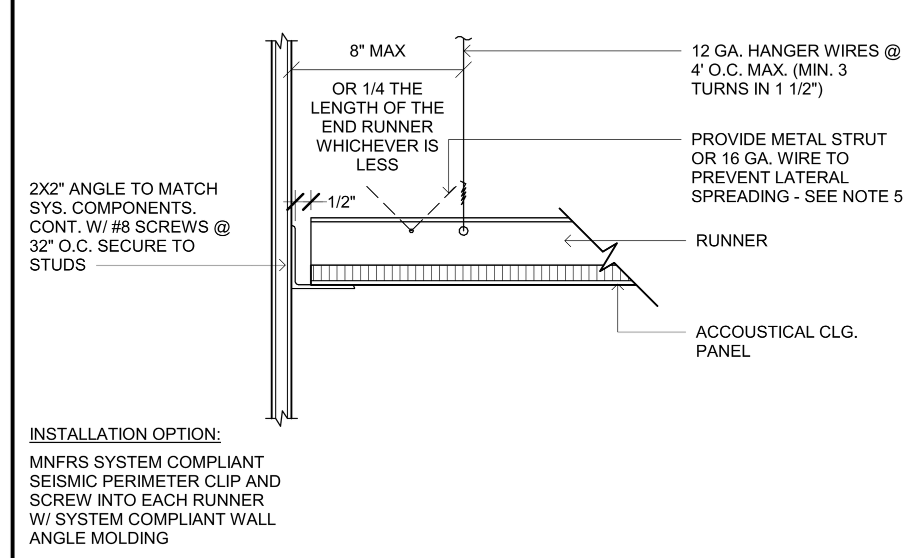

A930

SUSPENDED ACOUSTICAL CEILING SLIP JOINT AT WALL (6)

SCALE: 3" = 1'-0"

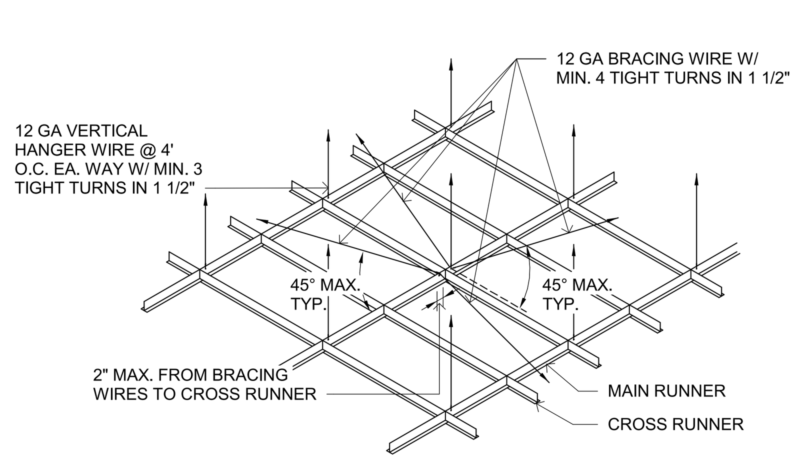

A930

DIAGRAMATIC ACOUSTICAL CEILING SUSPENSION SYSTEM (10)

SCALE: 1/2" = 1'-0"

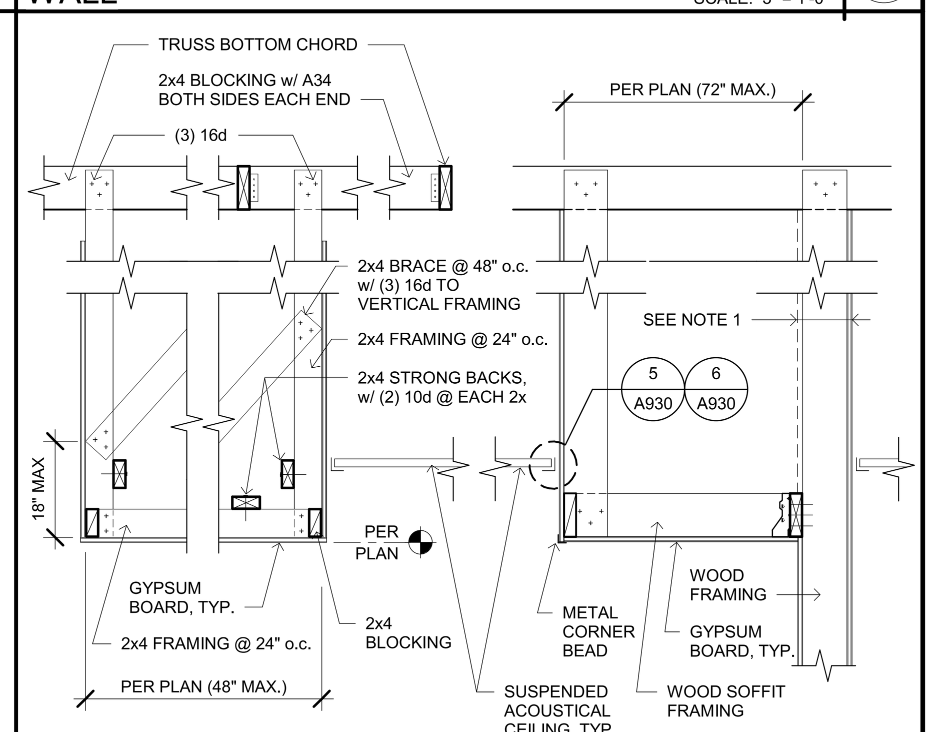

NOTE:
1. FOR ACOUSTICS EITHER MAIN WALL OR SOFFIT WALL SHALL HAVE GYPSUM BOARD FULL HEIGHT, TO DECK ABOVE, AT BOTH SIDES OF WALL

A930

TYPICAL SOFFITS (7)

SCALE: 3/4" = 1'-0"

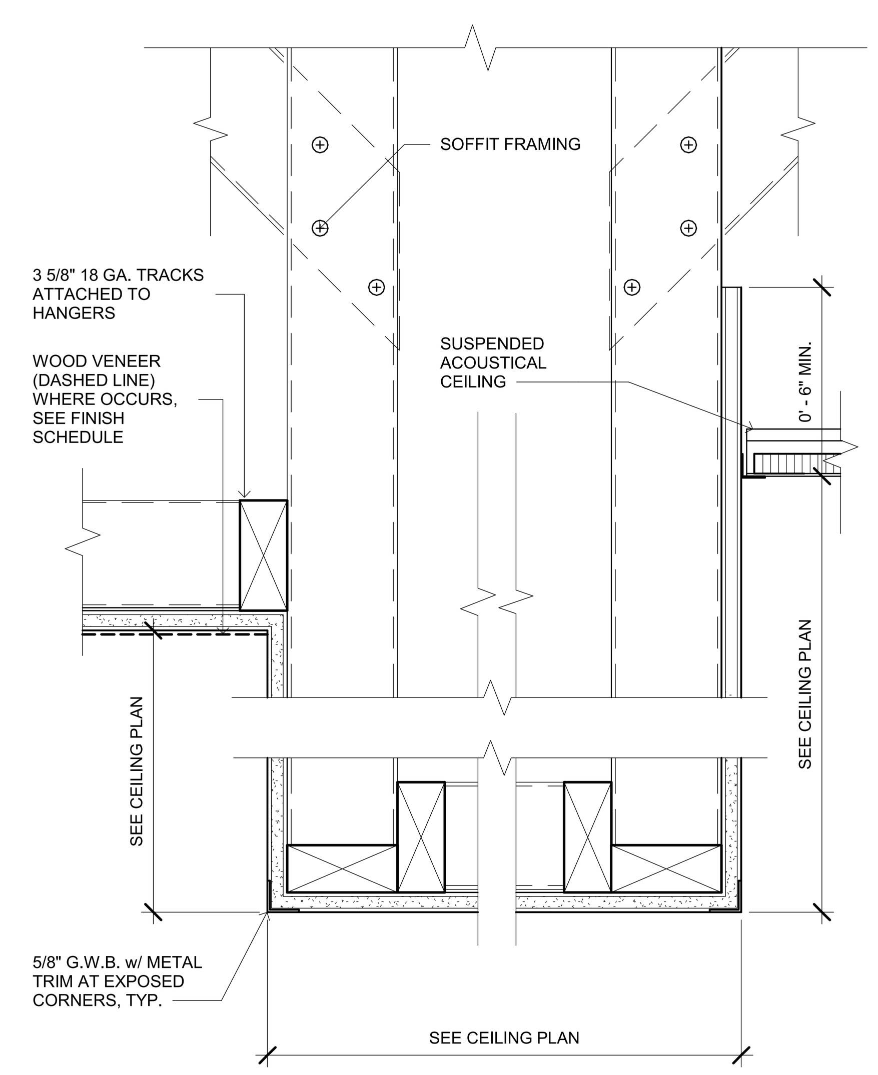

A930

STEPPED GYP. BD. SOFFIT AT SUSPENDED CEILING ALT. (3)

SCALE: 3" = 1'-0"

SUSPENDED CEILING NOTES:

1. 12 gauge (8 ga at gyp. bd.) hanger wires may be used for up to and including 4'-0" x 4'-0" grid spacing along main runners. Splices will not be permitted in any hanger wires. See detail 11/-
2. Provide 12 ga. (8 ga at gyp. bd.) hanger wires at the ends of all main and cross runners within 8" from the support or within 1/4 of the length of the end tee, whichever is least, for the perimeter of the ceiling area. End connections for runners which are designed and detailed to resist the applied horizontal forces may be used in lieu of the 12 ga. hanger wires subject to agency review and approval.
3. Provide trapeze or other supplementary support members at obstructions to main hanger spacing. Provide additional hangers, struts or braces as required at all ceiling breaks, soffits or discontinuous areas. Hanger wires that are more than 1 in 6 out of plumb wall shall have counter-sloping wires.
4. Ceiling grid members may be attached to not more than 2 adjacent walls. Ceiling grid members should be at least 1/2 inch free of other walls, If walls run diagonally to ceiling grid system runners, one end of main and cross runners should be free and a minimum of 1/2" clear of wall. See detail 8/-
5. At the perimeter of the ceiling area where main or cross runners are not connected to the adjacent wall, provide interconnection between the runners at the free end to prevent lateral spreading. A metal strut or 16 ga. wire with a positive mechanical connection to the runner may be used. Where the perpendicular distance from the wall to the first parallel runner is 12" or less, this interlock is not required. See detail 9/-
6. Provide sets of four 12 ga. splayed bracing wires oriented 90 degrees from each other at not more than 12 feet by 12 feet on center. Provide bracing wires at locations not more than 1/2 of the above spacings from each perimeter wall and at the edge of vertical ceiling offsets. The slope of these wires should not exceed 45 degrees from the plane of the ceiling and should be taut without causing the ceiling to lift. Splices in bracing wires are not to be permitted. See details 7/- & 10/-
7. Fasten hanger wires with not less than 3 tight turns. Fasten bracing splay wires with 4 tight turns. Make all tight turns within a distance of 1-1/2 inches. Hanger or bracing wire anchors to the structure should be installed in such a manner that the direction of the wire aligns as closely as possible with the direction of the forces acting on the wire.
8. Separate all ceiling hanging and bracing wires at least 6 inches from all unbraced ducts, pipes, conduit, etc. It is acceptable to attach lightweight items, such as single electrical conduit not exceeding 3/4" nominal diameter, to hanger wires using connectors acceptable to U.B.C..
9. Attach all light fixtures to the ceiling grid runners to resist a horizontal force equal the weight of the fixtures.
10. Flush or recessed light fixtures and air terminals or services weighing less than 56 pounds may be supported directly on the runners of heavy duty grid system but, in addition, they must have a minimum of two 12 ga. slack safety wires attached to the fixture at diagonal corners and anchored to the structure above.

    All flush or recessed light fixtures and air terminals or services weighing 56 pounds or more must be independently supported by not less than 4 taut 12 ga. wires each attached to the fixture and to the structure above regardless of the type of ceiling grid system used.

    The 4 taut 12 ga. wires including their attachment to the structure above must be capable of supporting 4 times the weight of the unit.
11. All fixtures and air terminals or services supported on intermediate duty grid systems must be independently supported by not less than 4 taut 12 ga. wires each attached to the fixture or terminal and to the structure above.
12. Support surface mounted light fixtures by at least two positive devices which surround the ceiling runner and which are each supported from the structure above by a 12 ga. wire. Spring clips or clamps that connect only to the runner are not acceptable. Provide additional supports when light fixtures are 8 feet or longer.
13. Support pendant mounted light fixtures directly from the structure above with hanger wires or cables passing through each pendant hanger and capable of supporting 4 times the weight of the fixture.
14. Lay-in ceiling assemblies in exitways shall be installed with a main runner or cross runner surrounding all sides of each piece of tile board or panel and each light fixture or grill splices and intersections of such runners shall be attached with through connectors such as pop rivets, screws, pins, plates with bent tabs or by other approved connectors. Expansion joints shall be provided in the ceiling at intersections of corridors and at junctions of corridors and lobbies or other similar areas.
15. Gypboard suspended ceiling systems shall comply with Title 24, CCR, and gypboard ceilings should not support materials or building components other than grills, light fixtures, small electrical conduits, small ducts and the like. All such components should be supported either directly from main runners, or by supplemental framing which is supported by main runners.
16. Suspended acoustical ceiling systems shall comply with 2019 CBC (2018 IBC), ASTM C635, ASTM C636, CISCA (FOR SEISMIC ZONES 3 & 4), AND ASCE 7.05. No vertical loads other than gypboard dead load should be applied to cross-furring.

GENERAL CEILING NOTES:

ALL WORK SHALL COMPLY WITH 2019 CBC (2018 IBC), ASTM C635, ASTM C636, CISCA (FOR SEISMIC ZONES 3 & 4), AND ASCE 7.05 PARTICULAR ATTENTION IS DIRECTED TO INDEPENDANT SUSPENSION OF FIXTURES, DUCTS, DIFFUSERS, GRID INTERSECTIONS, SPLICES, PERIMETER DETAILS AND SEISMIC REQUIREMENTS.

NOTES:

(1). The 2x4 sub-purlins, located in the roof in a typical type tilt-up structure, are not considered to be structural members.
(2). The strut shall be vertical, and shall not hang more than 1 in 6 out-of- plumb.
(3). Struts shall be designed in accordance with chapter 22 Steel, 2019 Edition of the California Building Code (2018 IBC).

PIPE:

ACCEPTABLE STRUT SIZES AND LENGHTS

TRADE SIZE	ALLOWABLE LENGTH	
	EMT	IMC or RMC
1/2"	3'-10"	4'-4"
3/4"	5'-2"	5'-7"
1"	6'-6"	7'-0"
1 1/4"	8'-6"	9'-0"
1 1/2"	9'-10"	10'-5"
2"	---	13'-2"

EMT - Electrical Metallic Tubing
IMC - Intermediate Metal Conduit
RMC - Rigid Metal Conduit

A930

SUSPENDED CEILING NOTES (1)

SCALE: 3" = 1'-0"

IDENTIFICATION STAMP
DIV. OF THE STATE ARCHITECT
APP: 02-118630 INC:
REVIEWED FOR
SS ☐ FLS ☐ ACS ☑
DATE: 04/13/2021

OFFICE OF THE STATE FIRE MARSHAL
APPROVED FIRE AND PANIC ONLY
Approval of this plan does not authorize or approve any omission or deviation from applicable regulations. Final approval is subject to field inspection. One set of approved plans shall be available on the project site at all times.
PERMIT NO.: 20-N-2332-CP
REVIEWED BY: LITO CATAYLO, OSFM
DATE: 4/ / /2021

GENERAL SERVICES
Department of General Services
State of California
Real Estate Services Division
Project Management & Development Branch
707 Third Street, Suite 4-105
West Sacramento, California 95605

NICHOLS MELBURG & ROSSETTO
ARCHITECTS + ENGINEERS
300 Knollcrest Drive
Redding, CA. 96002
(530) 222-3300 (530) 222-3538 FAX
http://www.nmrdesign.com

Copyright © 2020
All ideas, designs, arrangements and plans indicated or represented by this drawing are owned by, and the property of, NICHOLS, MELBURG and ROSSETTO and were created, evolved and developed for use on, and in conjunction with, the specified project. None of such ideas, designs, arrangements or plans shall be used by, or disclosed to any person, firm or corporation for any purpose whatsoever without the written permission of NICHOLS, MELBURG and ROSSETTO.

LICENSE STAMPS
LICENSED ARCHITECT KYLE MATTI C-27504 REN. 10/31/21 STATE OF CALIFORNIA

CONSULTANT

DRAWING STATUS
CONSTRUCTION DOCUMENTS

ISSUE

No.	Date	Description
1	10/20/2020	INITIAL PLAN REVIEW
2	01/22/2021	AGENCY RESUBMITTAL
3	03/22/2021	AGENCY RESUBMITTAL

If drawing is not 30" x 42" it is a reduced print

PROJECT
RESIDENTIAL CENTER, UKIAH: REPLACEMENT OF EXISTING RESIDENTIAL CENTER
440 EAST HILL ROAD
WILLITS, CALIFORNIA 95490
MENDOCINO COUNTY
CALIFORNIA CONSERVATION CORP

Supervisor: KJM | Designed: DMH | Drawn: Author

DSA Application No.
02-118630

SHEET TITLE
INTERIOR DETAILS - CEILINGS

DGS Project Number: 000000000001826
NMR Project Number: 18-6456

Reference North: NORTH
Sheet Scale: As indicated
Sheet Number: A930

ISSUE DATE
July 9, 2021

Plot Date: 3/19/2021 11:20:47 AM
File Name: BIM 360://CCC Willits Residential Center/A_CCC-WRC-COMMON.rvt

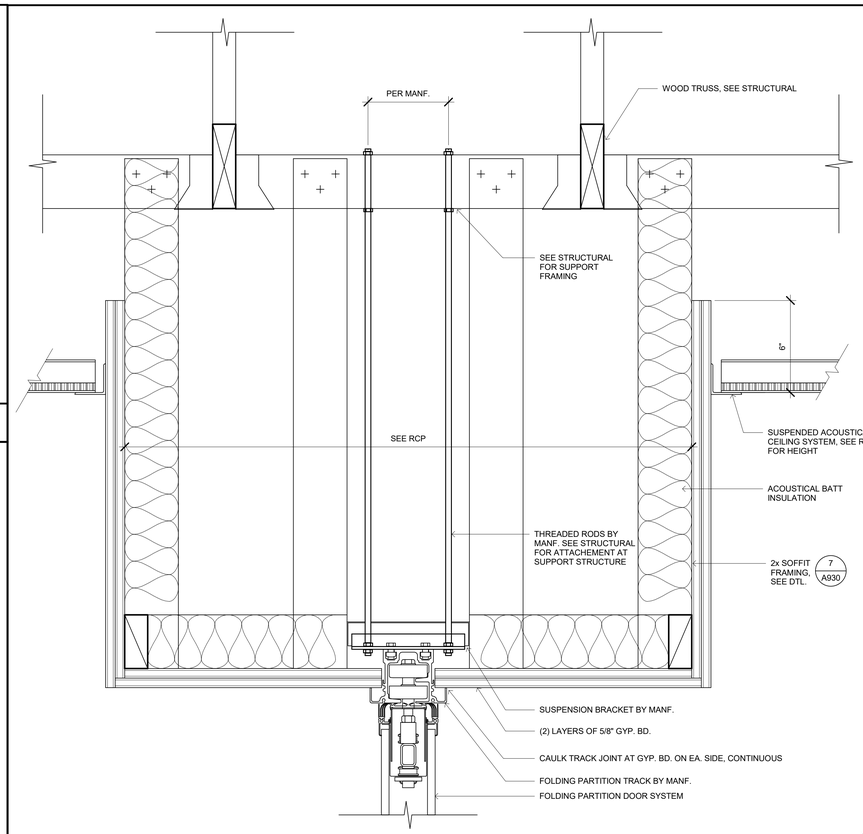

A931

FOLDING PARTITION HEAD DTL - EDUCATION BLDG. 6

SCALE: 3" = 1'-0"

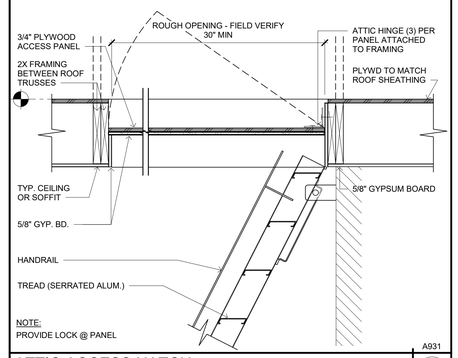

A931

ATTIC ACCESS HATCH 1

SCALE: 1" = 1'-0"

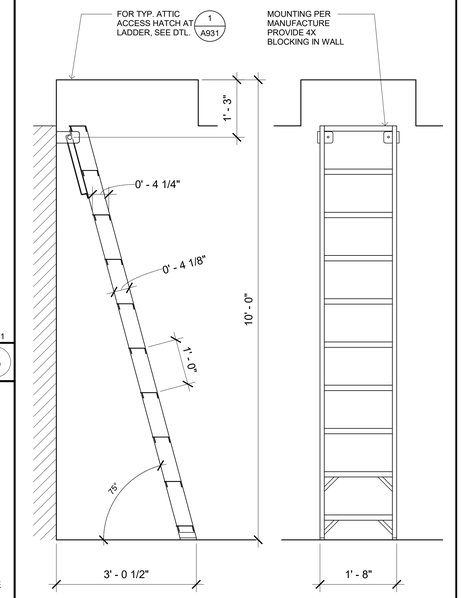

A931

PIVOTAL SHIPS LADDER 3

SCALE: 3/4" = 1'-0"

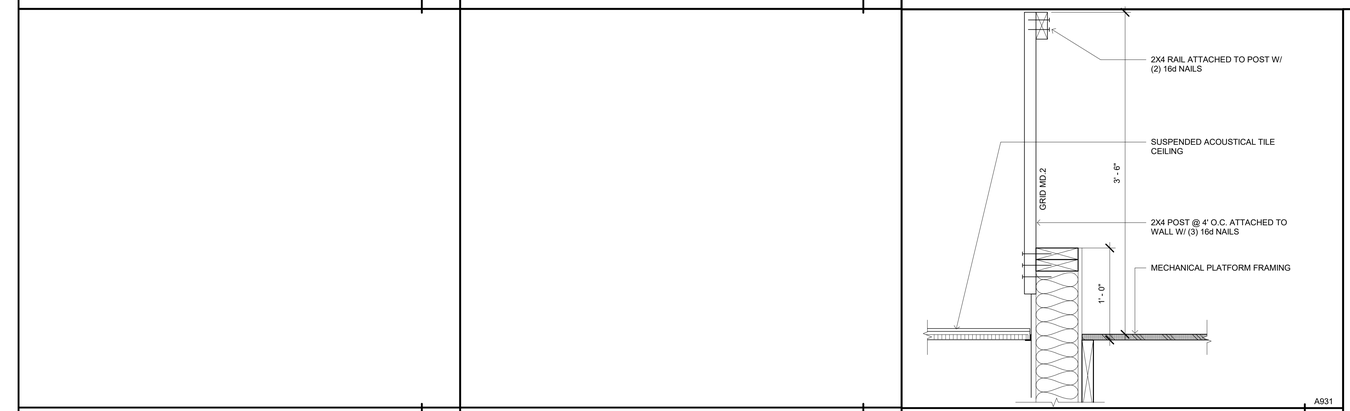

A931

MEZZANINE GUARD AT CEILING 11

SCALE: 1 1/2" = 1'-0"

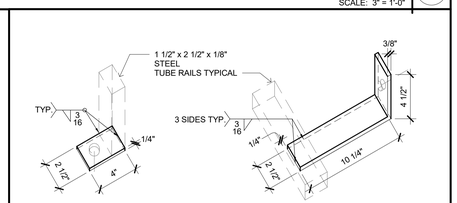

PLATE CONNECTION TAB ISOMETRIC

BENT PLATE SUPPORT BRACKET ISOMETRIC

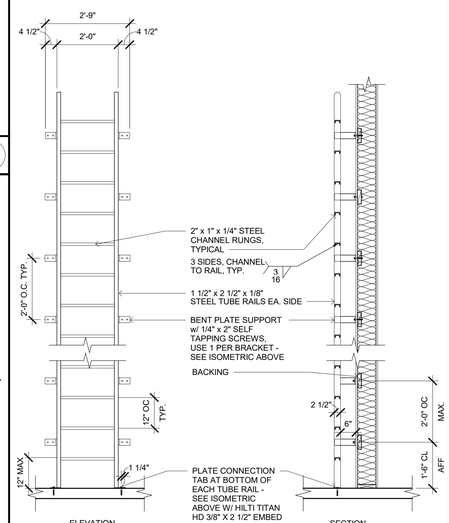

ELEVATION

SECTION

NOTE:
ALL EDGES AND CORNER TO BE EASED AND GROUND SMOOTH, PRIME AND PAINT - TYP

A931

ATTIC ACCESS PLATFORM LADDER 8

SCALE: 1/2" = 1'-0"

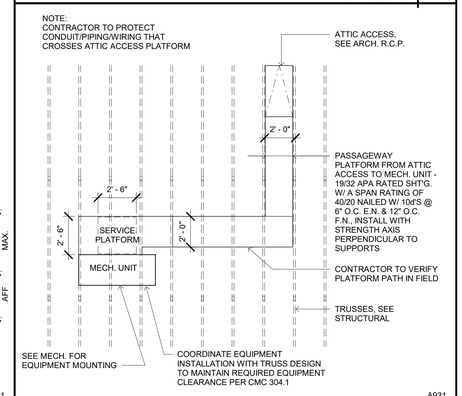

A931

ATTIC ACCESS PLATFORM FOR EQUIPMENT 4

SCALE: 1/4" = 1'-0"

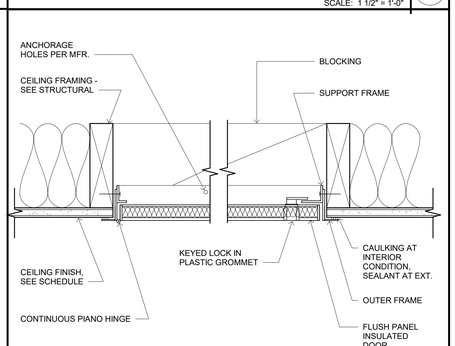

A931

ACCESS HATCH AT CEILING WALL CONDITION SIM 12

SCALE: 3" = 1'-0"

IDENTIFICATION STAMP
DIV. OF THE STATE ARCHITECT
APP: 02-118630 INC:
REVIEWED FOR
SS ☐ FLS ☐ ACS ☑
DATE: 04/13/2021

OFFICE OF THE STATE FIRE MARSHAL
APPROVED FIRE AND PANIC ONLY
Approval of this plan does not authorize or approve any omission or deviation from applicable regulations. Final approval is subject to field inspection. One set of approved plans shall be available on the project site at all times.
PERMIT NO. 20-N-2332-CP
REVIEWED BY: LEO CATAYLO, OSFM
DATE: 4 / /2021

GENERAL SERVICES
Department of General Services
State of California
Real Estate Services Division
Project Management & Development Branch
707 Third Street, Suite 4-105
West Sacramento, California 95605

NICHOLS MELBURG & ROSSETTO
ARCHITECTS + ENGINEERS
300 Knollcrest Drive
Redding, CA. 96002
(530) 222-3300 (530) 222-3538 FAX
http://www.nmrdesign.com

Copyright © 2020
All ideas, designs, arrangements and plans indicated or represented by this drawing are owned by, and the property of, NICHOLS, MELBURG and ROSSETTO and were created, evolved and developed for use on, and in conjunction with, the specified project. None of such ideas, designs, arrangements or plans shall be used by, or disclosed to any person, firm or corporation for any purpose whatsoever without the written permission of NICHOLS, MELBURG and ROSSETTO

LICENSE STAMPS

LICENSED ARCHITECT KYLE MATTHEW TAYLOR C-27504 REN. 10/31/21 STATE OF CALIFORNIA

CONSULTANT

DRAWING STATUS
CONSTRUCTION DOCUMENTS

ISSUE

No.	Date	Description
1	10/20/2020	INITIAL PLAN REVIEW
2	01/22/2021	AGENCY RESUBMITTAL
3	03/22/2021	AGENCY RESUBMITTAL

If drawing is not 30" x 42" it is a reduced print

PROJECT
RESIDENTIAL CENTER, UKIAH: REPLACEMENT OF EXISTING RESIDENTIAL CENTER
440 EAST HILL ROAD
WILLITS, CALIFORNIA 95490
MENDOCINO COUNTY
CALIFORNIA CONSERVATION CORP

Supervisor	Designed	Drawn
KJM	DMH	Author

DSA Application No.
02-118630

SHEET TITLE
INTERIOR DETAILS - CEILINGS

DGS Project Number: 000000000001826
NMR Project Number: 18-6456

Reference North: NORTH
Sheet Scale: As indicated
Sheet Number: A931

ISSUE DATE
July 9, 2021

Plot Date: 3/19/2021 11:26:50 AM
File Name: 18M 300 / CCC With Residential Center\A_CCC-WRC-COMMON.rvt

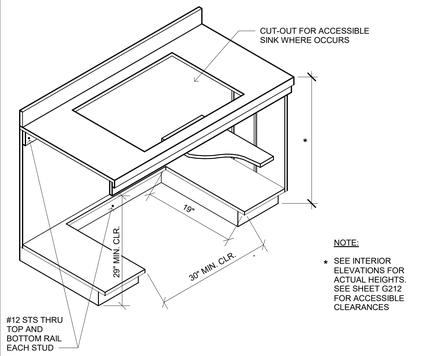

NOTE:

* SEE INTERIOR ELEVATIONS FOR ACTUAL HEIGHTS. SEE SHEET G212 FOR ACCESSIBLE CLEARANCES

ACCESSIBLE CABINET

A940 16

SCALE: 1" = 1'-0"

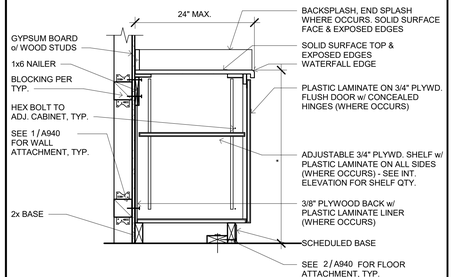

NOTE:

SEE INTERIOR ELEVATIONS FOR ACTUAL CABINET CONFIGURATION.

NOTE:

AT OPEN SHELVING CONDITION, SEE INTERIOR ELEVATIONS FOR SHELF COUNT.

* SEE INTERIOR ELEVATIONS FOR ACTUAL HEIGHTS. SEE SHEET G212 FOR ACCESSIBLE CLEARANCES.

BASE CABINET - NO DRAWER

B9 13

A940

SCALE: 1" = 1'-0"

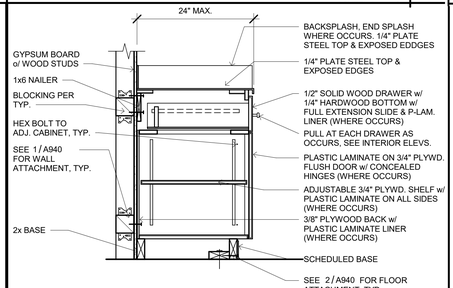

NOTE:

SEE INTERIOR ELEVATIONS FOR ACTUAL CABINET CONFIGURATION.

NOTE:

AT OPEN SHELVING CONDITION, SEE INTERIOR ELEVATIONS FOR SHELF COUNT.

* SEE INTERIOR ELEVATIONS FOR ACTUAL HEIGHTS. SEE SHEET G212 FOR ACCESSIBLE CLEARANCES.

BASE CABINET - 1/4" PLATE STEEL TOP

B10 14

A940

SCALE: 1" = 1'-0"

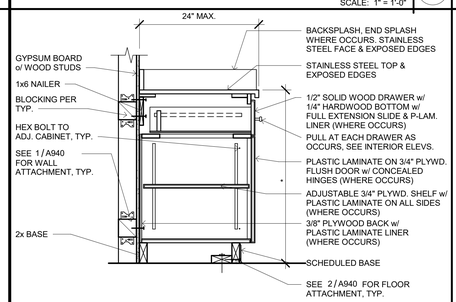

NOTE:

SEE INTERIOR ELEVATIONS FOR ACTUAL CABINET CONFIGURATION.

NOTE:

AT OPEN SHELVING CONDITION, SEE INTERIOR ELEVATIONS FOR SHELF COUNT.

* SEE INTERIOR ELEVATIONS FOR ACTUAL HEIGHTS. SEE SHEET G212 FOR ACCESSIBLE CLEARANCES.

BASE CABINET - STAINLESS STEEL TOP

B11 15

A940

SCALE: 1" = 1'-0"

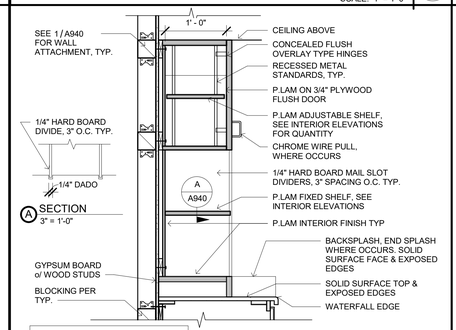

NOTE:

SEE INTERIOR ELEVATIONS FOR ACTUAL CABINET CONFIGURATION.

NOTE:

AT OPEN SHELVING CONDITION, SEE INTERIOR ELEVATIONS FOR SHELF COUNT.

SEE INTERIOR ELEVATIONS FOR ACTUAL HEIGHTS. SEE SHEET G212 FOR ACCESSIBLE CLEARANCES.

MAIL SLOTS

U3 17

A940

SCALE: 1" = 1'-0"

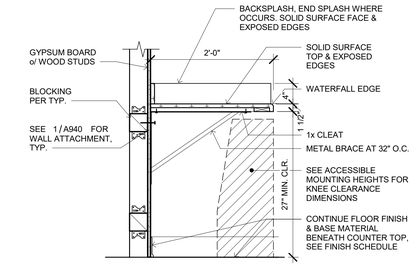

SOLID SURFACE COUNTERTOP

B6 10

A940

SCALE: 1" = 1'-0"

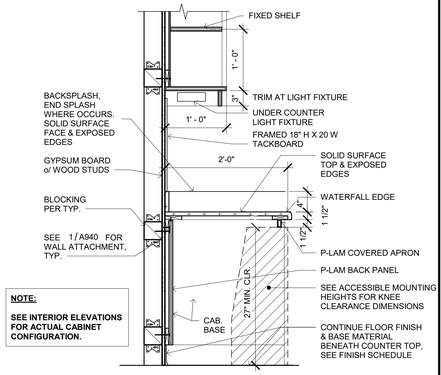

NOTE:

SEE INTERIOR ELEVATIONS FOR ACTUAL CABINET CONFIGURATION.

TYP. WRITING COUNTER AND UPPER CAB.

B7 11

A940

SCALE: 1" = 1'-0"

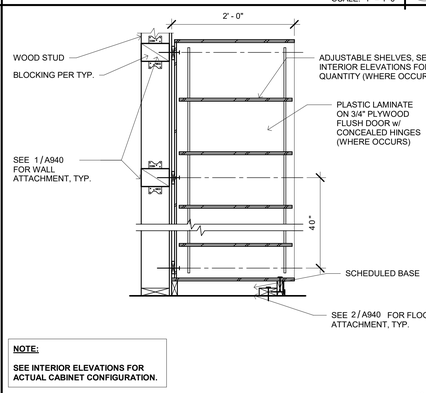

NOTE:

SEE INTERIOR ELEVATIONS FOR ACTUAL CABINET CONFIGURATION.

TALL STORAGE CABINET

B8 12

A940

SCALE: 1" = 1'-0"

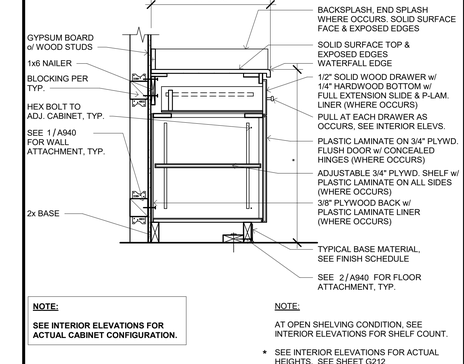

NOTE:

SEE INTERIOR ELEVATIONS FOR ACTUAL CABINET CONFIGURATION.

NOTE:

AT OPEN SHELVING CONDITION, SEE INTERIOR ELEVATIONS FOR SHELF COUNT.

* SEE INTERIOR ELEVATIONS FOR ACTUAL HEIGHTS. SEE SHEET G212 FOR ACCESSIBLE CLEARANCES.

BASE CABINET

B1 5

A940

SCALE: 1" = 1'-0"

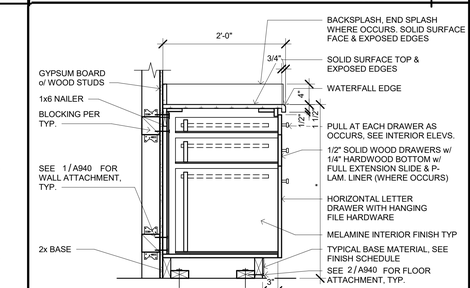

NOTE:

SEE INTERIOR ELEVATIONS FOR ACTUAL CABINET CONFIGURATION.

NOTE:

* SEE INTERIOR ELEVATIONS FOR ACTUAL HEIGHTS. SEE SHEET G212 FOR ACCESSIBLE CLEARANCES.

BASE CABINET - 3-DRAWER

B2 6

A940

SCALE: 1" = 1'-0"

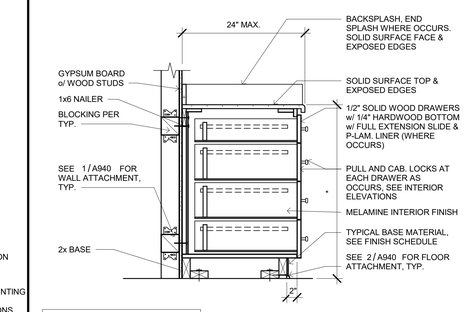

NOTE:

SEE INTERIOR ELEVATIONS FOR ACTUAL CABINET CONFIGURATION.

NOTE:

* SEE INTERIOR ELEVATIONS FOR ACTUAL HEIGHTS. SEE SHEET G212 FOR ACCESSIBLE CLEARANCES.

BASE CABINET - 4-DRAWER

B3 7

A940

SCALE: 1" = 1'-0"

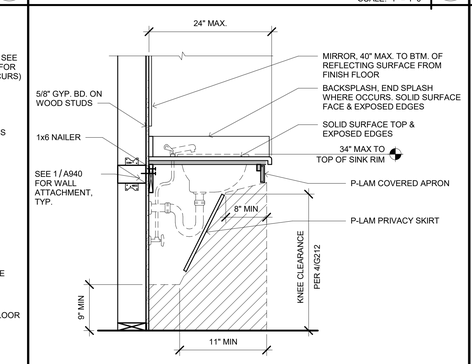

NOTE:

SEE INTERIOR ELEVATIONS FOR ACTUAL CABINET CONFIGURATION.

ACCESSIBLE CABINET SKIRT

B4 8

A940

SCALE: 1" = 1'-0"

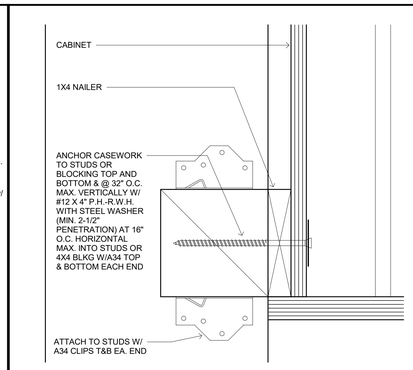

TYPICAL CABINET ANCHORAGE TO WALL

A940 1

SCALE: 6" = 1'-0"

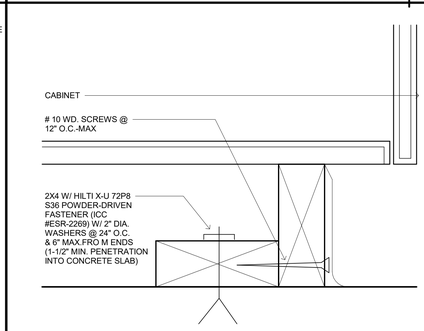

TYPICAL CABINET ANCHORAGE TO SLAB

A940 2

SCALE: 1" = 1'-0"

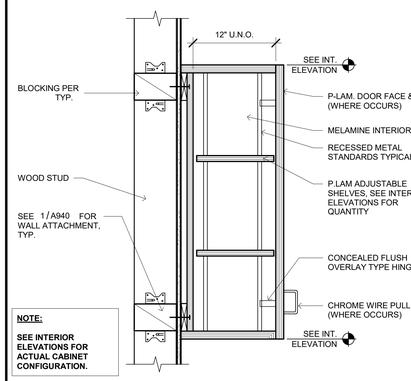

NOTE:

SEE INTERIOR ELEVATIONS FOR ACTUAL CABINET CONFIGURATION.

UPPER (WALL HUNG) CABINET

U1 3

A940

SCALE: 1 1/2" = 1'-0"

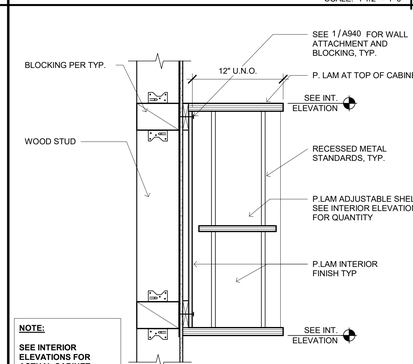

NOTE:

SEE INTERIOR ELEVATIONS FOR ACTUAL CABINET CONFIGURATION.

UPPER (WALL HUNG) CABINET - OPEN

U2 4

A940

SCALE: 1 1/2" = 1'-0"

IDENTIFICATION STAMP
DIV. OF THE STATE ARCHITECT
APP: 02-118630 INC:
REVIEWED FOR
SS ☐ FLS ☐ ACS ☑
DATE: 04/13/2021

OFFICE OF THE STATE FIRE MARSHAL
APPROVED FIRE AND PANIC ONLY
Approval of this plan does not authorize or approve any omission or deviation from applicable regulations. Final approval is subject to field inspection. One set of approved plans shall be available on the project site at all times.
PERMIT NO. 20-N-2332-CP
REVIEWED BY: LEO CATAYLO, OSFM
DATE: 4 / /2021

GENERAL SERVICES
Department of General Services
State of California
Real Estate Services Division
Project Management & Development Branch
707 Third Street, Suite 4-105
West Sacramento, California 95605

NICHOLS MELBURG & ROSSETTO ARCHITECTS + ENGINEERS
300 Knollcrest Drive
Redding, CA. 96002
(530) 222-3300 (530) 222-3538 FAX
http://www.nmrdesign.com

Copyright © 2020
All ideas, designs, arrangements and plans indicated or represented by this drawing are owned by, and the property of, NICHOLS, MELBURG and ROSSETTO and were created, evolved and developed for use on, and in conjunction with, the specified project. None of such ideas, designs, arrangements or plans shall be used by, or disclosed to any person, firm or corporation for any purpose whatsoever without the written permission of NICHOLS, MELBURG and ROSSETTO.

LICENSE STAMPS

LICENSED ARCHITECT KYLE MATTY C-32504 REN. 10/31/21 STATE OF CALIFORNIA

CONSULTANT

DRAWING STATUS
CONSTRUCTION DOCUMENTS

ISSUE

No.	Date	Description
1	10/20/2020	INITIAL PLAN REVIEW
2	01/22/2021	AGENCY RESUBMITTAL
3	03/22/2021	AGENCY RESUBMITTAL

If drawing is not 30" x 42" it is a reduced print

PROJECT
RESIDENTIAL CENTER, UKIAH: REPLACEMENT OF EXISTING RESIDENTIAL CENTER
440 EAST HILL ROAD
WILLITS, CALIFORNIA 95490
MENDOCINO COUNTY
CALIFORNIA CONSERVATION CORP

Supervisor	Designed	Drawn
KJM	DMH	NMR

DSA Application No.
02-118630

SHEET TITLE
INTERIOR DETAILS - CASEWORK DETAILS

DGS Project Number: 00000000001826
NMR Project Number: 18-6456

Reference North
Sheet Scale: As indicated
Sheet Number: A940

ISSUE DATE
July 9, 2021

Plot Date: 3/19/2021 11:26:56 AM
File Name: BIM 360://CCD Willits Residential Center/A_CCC-WRC-COMMON.rvt

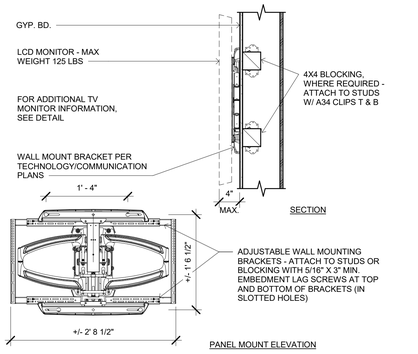

TV MONITOR MOUNTING AT WALL — A960 — 17

SCALE: 1" = 1'-0"

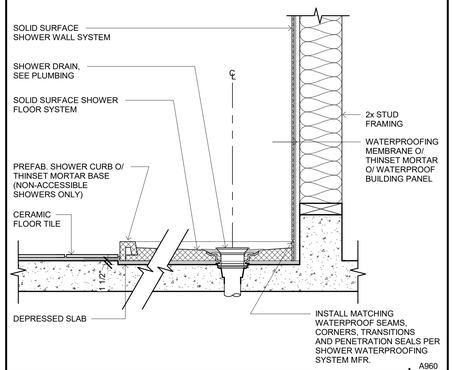

SHOWER STALL SECTION — A960 — 13

SCALE: 1 1/2" = 1'-0"

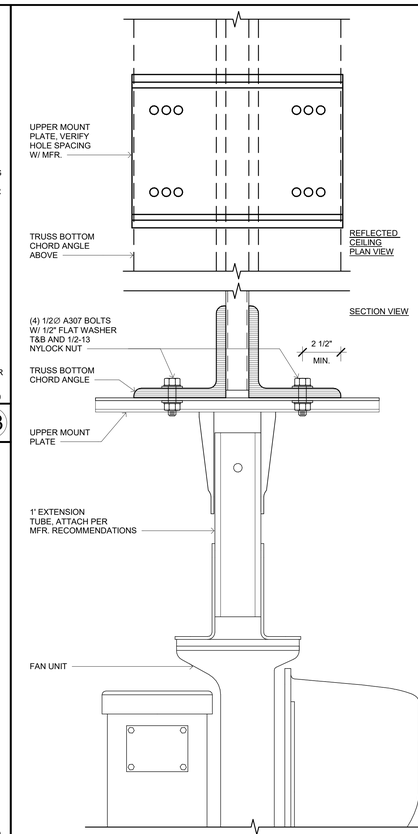

HVLS CEILING FAN — A960 — 10

SCALE: 3" = 1'-0"

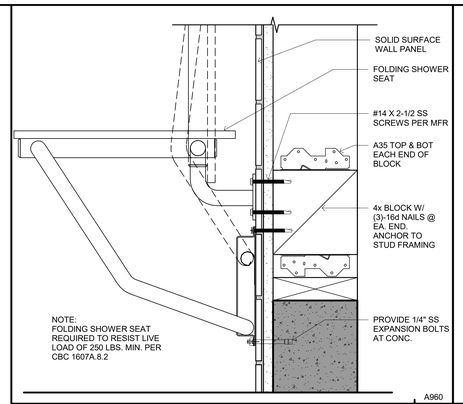

SHOWER SEAT ANCHORAGE — A960 — 5

SCALE: 3" = 1'-0"

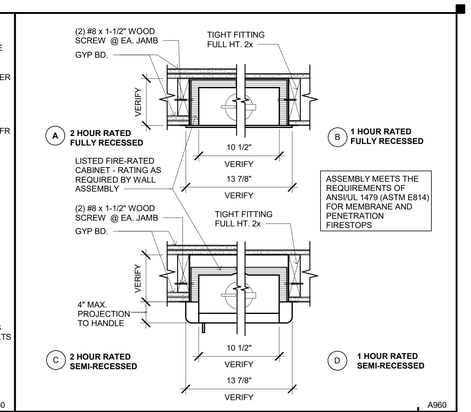

RATED RECESSED & SEMI-RECESSED FIRE EXTINGUINSHER CABINETS — A960 — 1

SCALE: 1 1/2" = 1'-0"

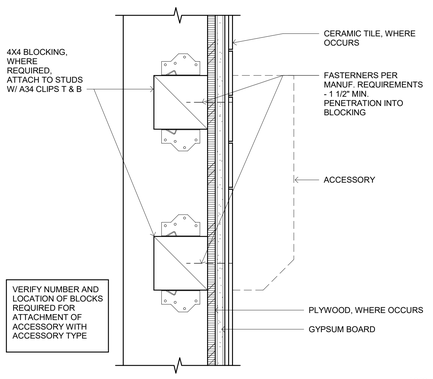

TYP. ACCESSORY MOUNTING DETAIL — A960 — 18

SCALE: 3" = 1'-0"

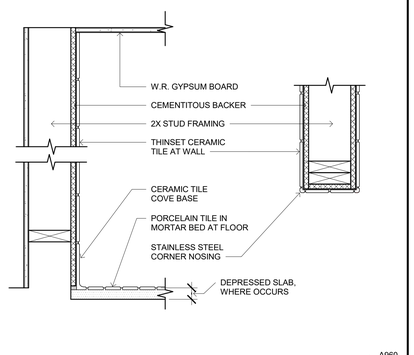

TILE FINISH — A960 — 14

SCALE: 1 1/2" = 1'-0"

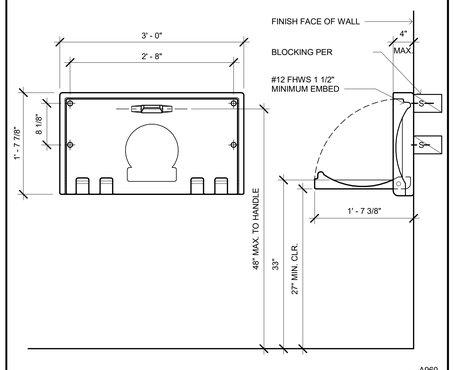

CHANGING STATION — A960 — 6

SCALE: 1" = 1'-0"

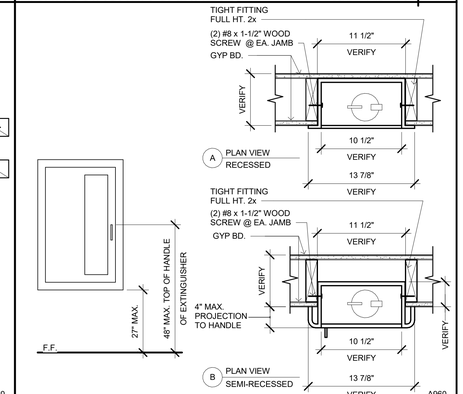

RECESSED & SEMI-RECESSED FIRE EXTINGUISHER CABINETS — A960 — 2

SCALE: 1 1/2" = 1'-0"

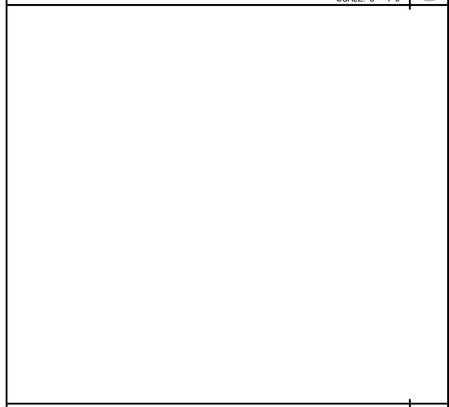

URINAL SCREEN ANCHORAGE — A960 — 15

SCALE: 3" = 1'-0"

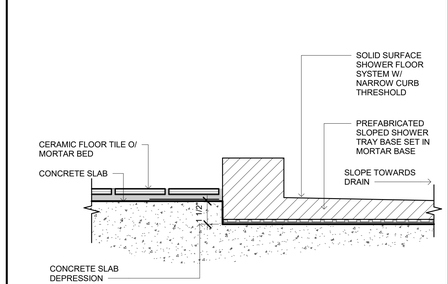

TYPICAL SHOWER FLOOR TRANSITION (NON-ACCESSIBLE) — A960 — 11

SCALE: 3" = 1'-0"

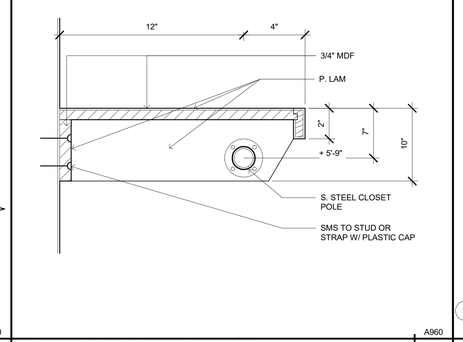

CLOSET SHELF & POLE DETAIL — A960 — 7

SCALE: 3" = 1'-0"

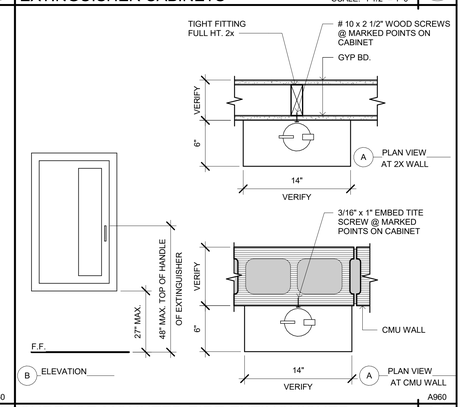

SURFACE-MOUNTED FIRE EXTINGUISHER CABINET — A960 — 3

SCALE: 1 1/2" = 1'-0"

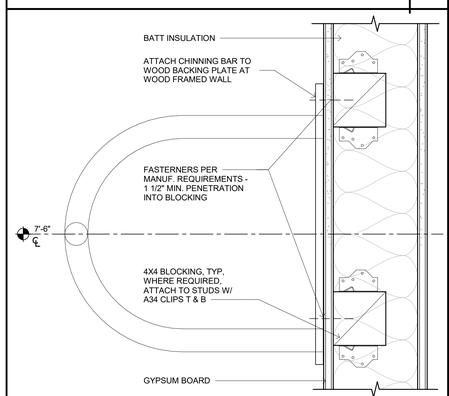

CHINNING BAR INSTALLATION — A960 — 20

SCALE: 3" = 1'-0"

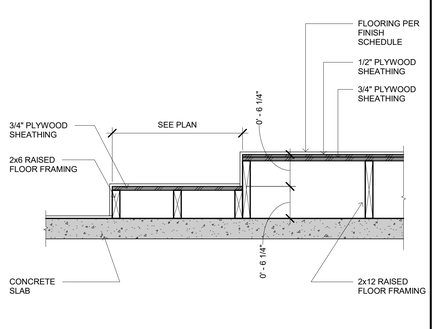

TV ROOM RAISED FLOORING — A960 — 16

SCALE: 1" = 1'-0"

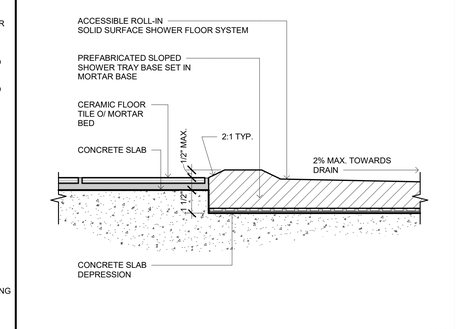

ACCESSIBLE SHOWER FLOOR TRANSITION — A960 — 12

SCALE: 3" = 1'-0"

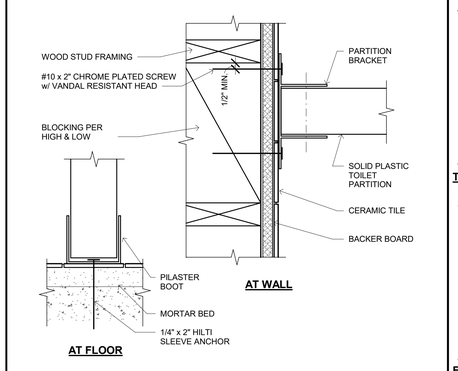

TOILET PARTITION & SHOWER ANCHORAGE SYSTEM ANCHORAGE — A960 — 8

SCALE: 3" = 1'-0"

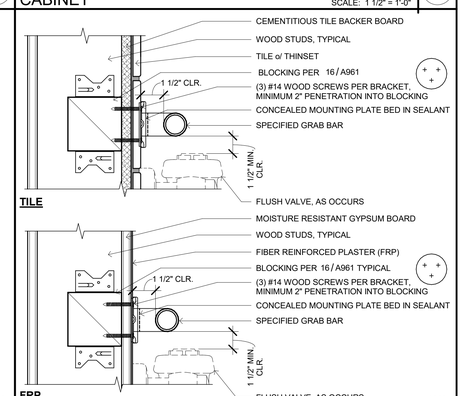

GRAB BAR ANCHORAGE — A960 — 4

SCALE: 3" = 1'-0"

Plot Date: 3/19/2021 11:21:00 AM
File Name: 3190.300 //CC1 WRB Residential Center/A_CCC-WRC-COMMON.rvt

IDENTIFICATION STAMP
DIV. OF THE STATE ARCHITECT
APP: 02-118630 INC:
REVIEWED FOR
SS ☐ FLS ☐ ACS ☑
DATE: 04/13/2021

OFFICE OF THE STATE FIRE MARSHAL
APPROVED FIRE AND PANIC ONLY
Approval of this plan does not authorize or approve any omission or deviation from applicable regulations. Final approval is subject to field inspection. One set of approved plans shall be available on the project site at all times.
PERMIT NO. 20-N-2332-CP
REVIEWED BY: LEO CATAYLO, OSFM
DATE: 4 / /2021

GENERAL SERVICES
Department of General Services
State of California
Real Estate Services Division
Project Management & Development Branch
707 Third Street, Suite 4-105
West Sacramento, California 95605

NICHOLS MELBURG & ROSSETTO ARCHITECTS + ENGINEERS
300 Knollcrest Drive
Redding, CA. 96002
(530) 222-3300 (530) 222-3538 FAX
http://www.nmrdesign.com

Copyright © 2020
All ideas, designs, arrangements and plans indicated or represented by this drawing are owned by, and the property of, NICHOLS, MELBURG and ROSSETTO and were created, evolved and developed for use on, and in conjunction with, the specified project. None of such ideas, designs, arrangements or plans shall be used by, or disclosed to any person, firm or corporation for any purpose whatsoever without the written permission of NICHOLS, MELBURG and ROSSETTO

LICENSE STAMPS

LICENSED ARCHITECT KYLE MATTHEW ROSSETTO C 21504 EXP. 10/31/21 STATE OF CALIFORNIA

CONSULTANT

DRAWING STATUS
CONSTRUCTION DOCUMENTS

ISSUE

No.	Date	Description
1	10/20/2020	INITIAL PLAN REVIEW
2	01/22/2021	AGENCY RESUBMITTAL
3	03/22/2021	AGENCY RESUBMITTAL

If drawing is not 30" x 42" it is a reduced print

PROJECT
RESIDENTIAL CENTER, UKIAH: REPLACEMENT OF EXISTING RESIDENTIAL CENTER
440 EAST HILL ROAD
WILLITS, CALIFORNIA 95490
MENDOCINO COUNTY
CALIFORNIA CONSERVATION CORP

Supervisor	Designed	Drawn
KJM	DMH	Author

DSA Application No.
02-118630

SHEET TITLE
INTERIOR DETAILS - MISCELLANEOUS

DGS Project Number	NMR Project Number
000000000001826	18-6456

Reference North — NORTH
Sheet Scale: As indicated
Sheet Number: A960

ISSUE DATE
July 9, 2021

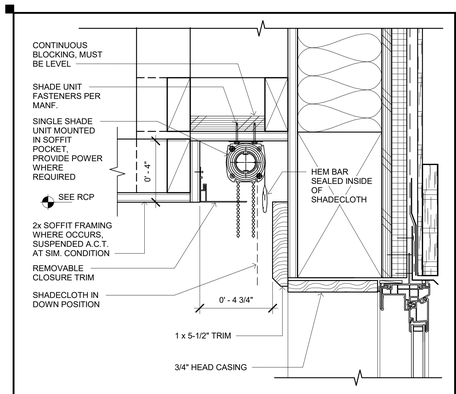

RECESSED SINGLE ROLLER SHADE — A961 / 17

SCALE: 3" = 1'-0"

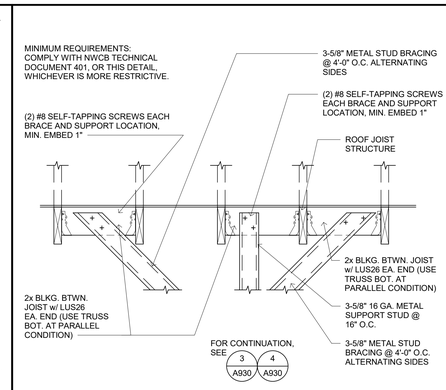

SUSPENDED SUPPORT AT WOOD STRUCTURE — A961 / 13

SCALE: 1" = 1'-0"

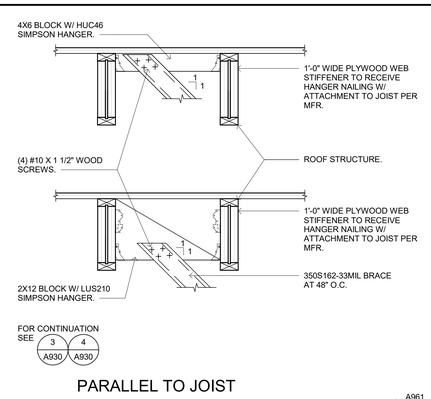

PARALLEL TO JOIST

SUSPENDED SUPPORT AT WOOD STRUCTURE PARALLEL — A961 / 9

SCALE: 1" = 1'-0"

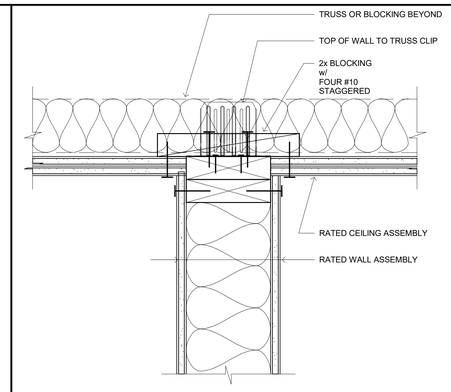

TOP OF 1 HOUR FIRE PARTITION — A961 / 5

SCALE: 3" = 1'-0"

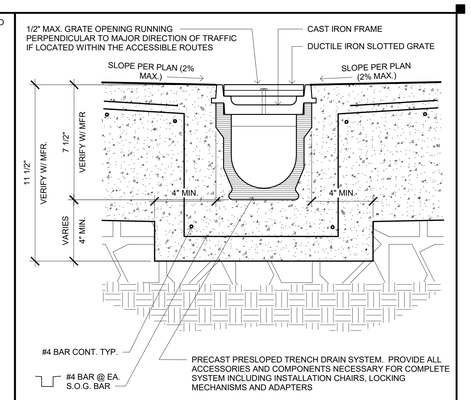

A060

TRENCH DRAIN — A961 / 1

SCALE: 3" = 1'-0"

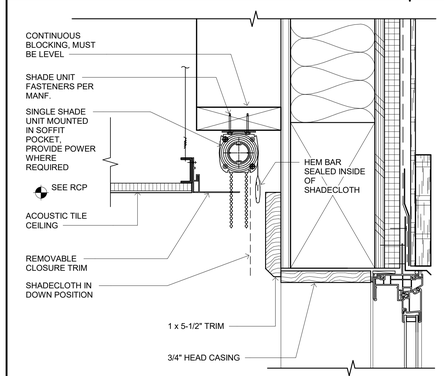

WALL-MOUNTED SINGLE ROLLER SHADE — A961 / 18

SCALE: 3" = 1'-0"

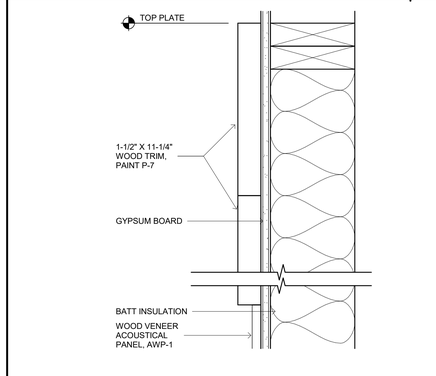

MULTI-USE COURT UPPER TRIM BAND — A961 / 14

SCALE: 3" = 1'-0"

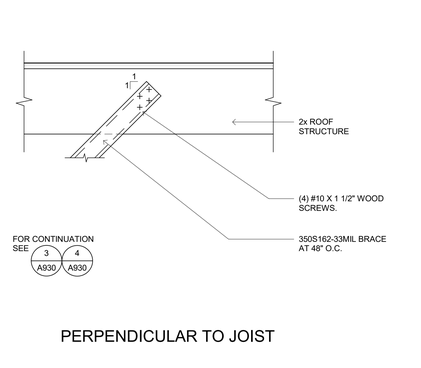

PERPENDICULAR TO JOIST

SUSPENDED SUPPORT AT WOOD STRUCTURE PERPENDICULAR — A961 / 10

SCALE: 1" = 1'-0"

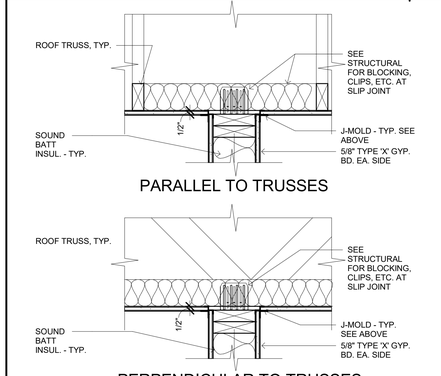

PARALLEL TO TRUSSES

PERPENDICULAR TO TRUSSES

INTERIOR NON-BEARING PARTITION AT TRUSSES — A961 / 6

SCALE: 1 1/2" = 1'-0"

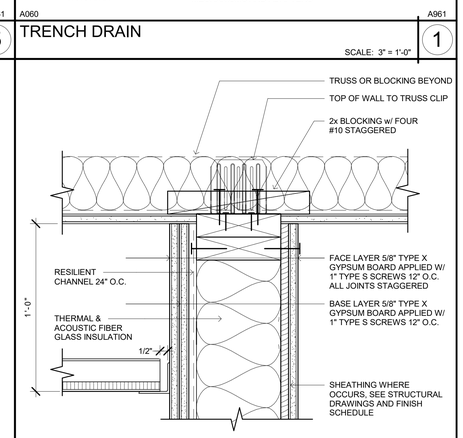

TOP OF ACOUSTICAL WALL — A961 / 2

SCALE: 3" = 1'-0"

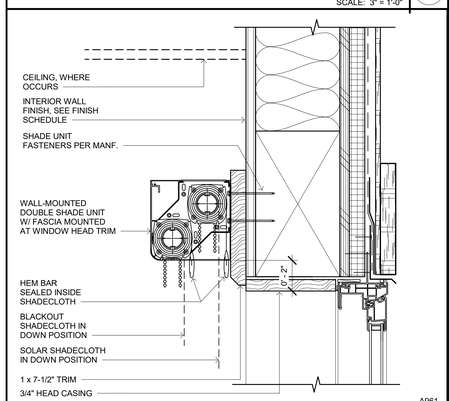

WALL-MOUNTED DOUBLE ROLLER SHADE — A961 / 19

SCALE: 3" = 1'-0"

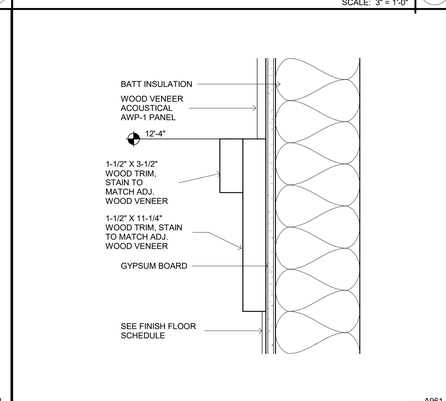

MULTI-USE COURT MIDDLE TRIM BAND — A961 / 15

SCALE: 3" = 1'-0"

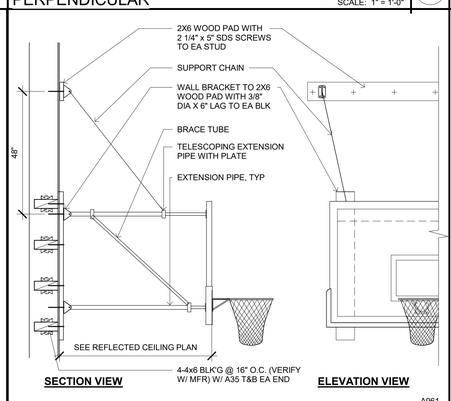

BASKETBALL BACKSTOP WALL MOUNTED — A961 / 11

SCALE: 1/2" = 1'-0"

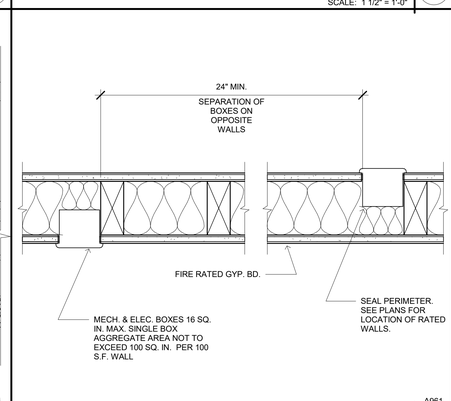

BOX PENETRATION AT RATED WALLS — A961 / 7

SCALE: 3" = 1'-0"

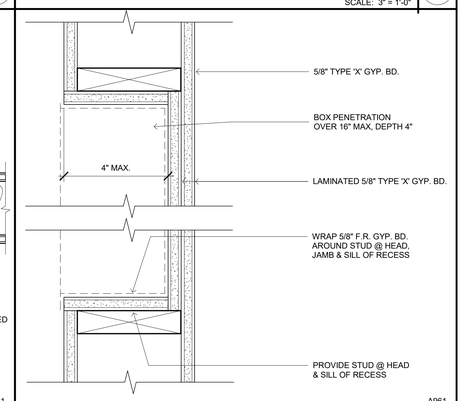

SHALLOW BOX PENETRATION — A961 / 3

SCALE: 3" = 1'-0"

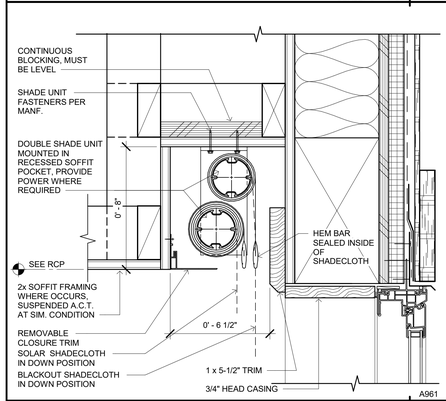

RECESSED DOUBLE ROLLER SHADE — A961 / 20

SCALE: 3" = 1'-0"

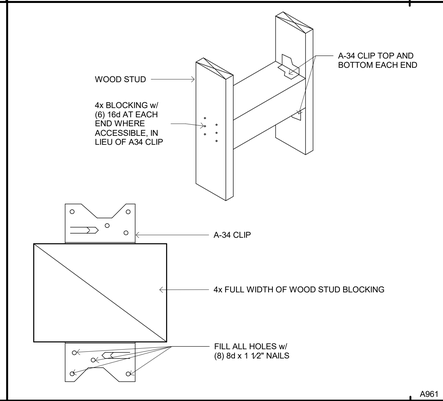

TYPICAL A-34 WITH 4x BLOCKING — A961 / 16

SCALE: 1/2" = 1'-0"

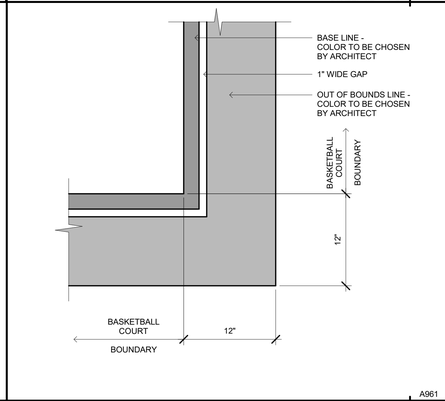

PERIMETER BOUNDARY STRIPING — A961 / 12

SCALE: 1 1/2" = 1'-0"

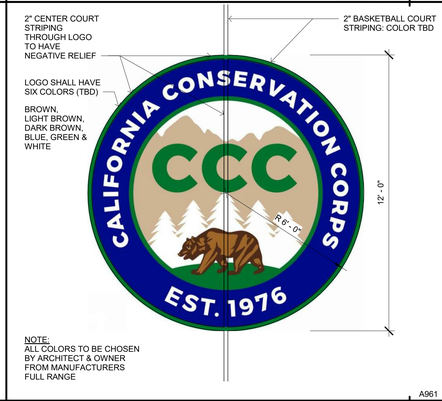

CENTER COURT LOGO — A961 / 8

SCALE: 3/8" = 1'-0"

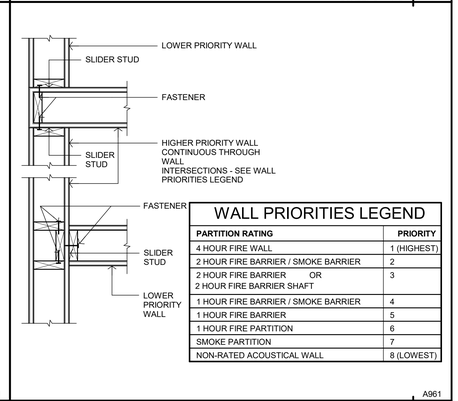

WALL PRIORITIES LEGEND

PARTITION RATING	PRIORITY
4 HOUR FIRE WALL	1 (HIGHEST)
2 HOUR FIRE BARRIER / SMOKE BARRIER	2
2 HOUR FIRE BARRIER OR 2 HOUR FIRE BARRIER SHAFT	3
1 HOUR FIRE BARRIER / SMOKE BARRIER	4
1 HOUR FIRE BARRIER	5
1 HOUR FIRE PARTITION	6
SMOKE PARTITION	7
NON-RATED ACOUSTICAL WALL	8 (LOWEST)

WALL INTERSECTION PRIORITIES — A961 / 4

SCALE: 12" = 1'-0"

Plot Date: 5/18/2021 11:21:05 AM
File Name: 8184.300 / CCC-Ukiah Residential Center/A_CCC-NRC-COMMON.rvt

IDENTIFICATION STAMP
DIV. OF THE STATE ARCHITECT
APP: 02-118630 INC:
REVIEWED FOR
SS ☐ FLS ☐ ACS ☑
DATE: 04/13/2021

OFFICE OF THE STATE FIRE MARSHAL
APPROVED FIRE AND PANIC ONLY
Approval of this plan does not authorize or approve any omission or deviation from applicable regulations. Final approval is subject to field inspection. One set of approved plans shall be available on the project site at all times.
PERMIT NO. 20-N-2332-CP
REVIEWED BY: LEO CATAYLO, OSFM
DATE: 4 / /2021

DGS GENERAL SERVICES
Department of General Services
State of California
Real Estate Services Division
Project Management & Development Branch
707 Third Street, Suite 4-105
West Sacramento, California 95605

NICHOLS MELBURG & ROSSETTO ARCHITECTS + ENGINEERS
300 Knollcrest Drive
Redding, CA. 96002
(530) 222-3300 (530) 222-3538 FAX
http://www.nmrdesign.com

Copyright © 2020
All ideas, designs, arrangements and plans indicated or represented by this drawing are owned by, and the property of, NICHOLS, MELBURG and ROSSETTO and were created, evolved and developed for use on, and in conjunction with, the specified project. None of such ideas, designs, arrangements or plans shall be used by, or disclosed to any person, firm or corporation for any purpose whatsoever without the written permission of NICHOLS, MELBURG and ROSSETTO

LICENSE STAMPS

LICENSED ARCHITECT KYLE MATTHEW ROSSETTO C-21504 REN. 10/31/21 STATE OF CALIFORNIA

CONSULTANT

DRAWING STATUS
CONSTRUCTION DOCUMENTS

ISSUE

No.	Date	Description
1	10/20/2020	INITIAL PLAN REVIEW
2	01/22/2021	AGENCY RESUBMITTAL
3	03/22/2021	AGENCY RESUBMITTAL

If drawing is not 30" x 42" it is a reduced print

PROJECT
RESIDENTIAL CENTER, UKIAH: REPLACEMENT OF EXISTING RESIDENTIAL CENTER
440 EAST HILL ROAD
WILLITS, CALIFORNIA 95490
MENDOCINO COUNTY
CALIFORNIA CONSERVATION CORP

Supervisor	Designed	Drawn
KJM	DMH	Author

DSA Application No.
02-118630

SHEET TITLE
INTERIOR DETAILS - MISCELLANEOUS

DGS Project Number: 000000000001826
NMR Project Number: 18-6456

Reference North: NORTH
Sheet Scale: As indicated
Sheet Number: A961

ISSUE DATE
July 9, 2021

BUILDING EXTERIOR, PARKING AREA AND VEHICULAR TRAFFIC SIGN(S)

SEE SHEET XXX

P PARKING SIGNS

SEE SPECS

Q CONCEALED ITEM SIGN

M NO SMOKING SIGN
3"=1'-0"

N FIRE EXTINGUISHER
3"=1'-0"

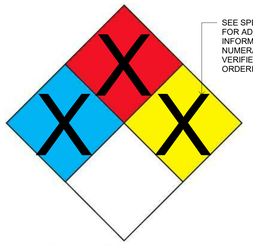

O NFPA 704 PLACARD
3"=1'-0"

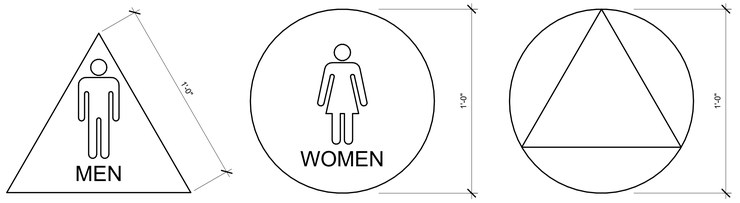

IDENTIFYING SYMBOLS CENTERED ON THE DOOR 58" MIN. - 60" MAX. A.F.F. (CBC 11B-703.7.2.6) IN A COLOR AND 70% MIN. CONTRAST DIFFERENT FROM THE DOOR.

MENS FACILITY DOORS SHALL HAVE AN EQUILATERAL TRIANGLE 1/4" THICK W/ 12" SIDES AND A VERTEX POINTING UPWARDS.

WOMENS FACILITY DOORS SHALL HAVE A 12" CIRCLE 1/4" THICK.

UNISEX FACILITY DOORS SHALL HAVE A 12" DIAMETER CIRCLE 1/4" THICK AND A 1/4" THICK TRIANGLE INSCRIBED AND SUPERIMPOSED ON THE CIRCLE. CIRCLE SHALL BE A COLOR TO CONTRAST BOTH DOOR & TRIANGLE.

AS OF MARCH 1, 2017 - ALL SINGLE USER TOILET FACILITIES IN ANY BUSINESS ESTABLISHMENT, PLACE OF PUBLIC ACCOMMODATION, OR STATE OR LOCAL GOVERNMENT AGENCY SHALL BE IDENTIFIED AS ALL-GENDER FACILITIES BY SIGNAGE THAT COMPLIES WITH TITLE 24 OF THE CALIFORNIA CODE OF REGULATIONS, AND DESIGNATED FOR USE BY NO MORE THAN ONE OCCUPANT AT A TIME OR FOR FAMILY OR ASSISTED USE (HEALTH AND SAFETY CODE SECTION 118600).

H TOILET ROOM DOOR SYMBOLS
3"=1'-0"

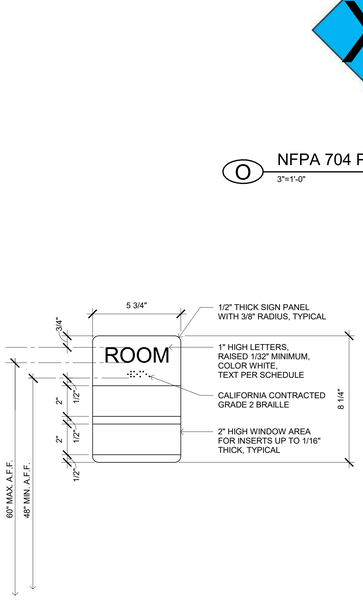

R1 ROOM IDENTIFICATION SIGN WITH INSERT
3" = 1'-0"

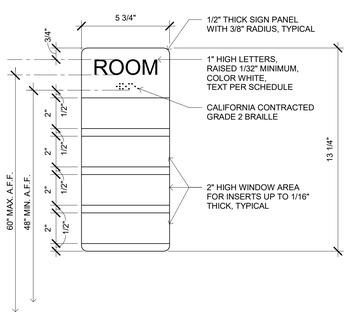

R2 ROOM IDENTIFICATION SIGN WITH MULITPLE INSERTS
3" = 1'-0"

PROVIDE RESTROOM SIGNAGE AS REQUIRED ON THE DOOR SCHEDULE.

IN ADDITION TO THE 12" SYMBOLS AT +60" ON THE RESTROOM DOORS PROVIDE:
10" X 10" SIGN MOUNTED AT ON WALL AT LATCH SIDE OF DOOR

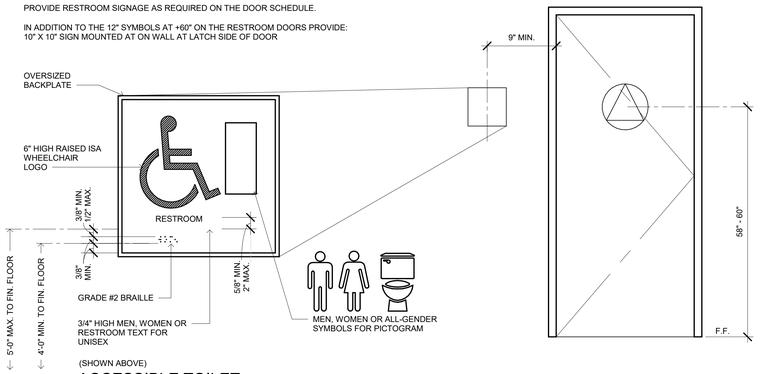

(SHOWN ABOVE)

J ACCESSIBLE TOILET ROOM SIGN
NOT TO SCALE

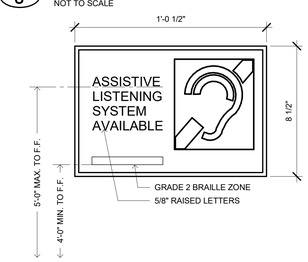

K ASSITIVE LISTENING SIGN
3"=1'-0"

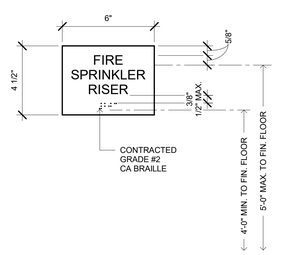

F FIRE SPRINKLER RISER
3"=1'-0"

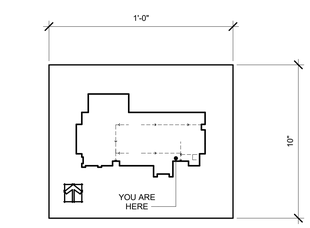

L EMERGENCY EVACUATION SIGN
3"=1'-0"

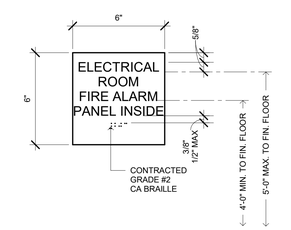

G ELECTRICAL ROOM
3"=1'-0"

SIGNAGE LEGEND

SEE SPECIFICATIONS AND SHEET A965 FOR ADDITIONAL INFORMATION AND NOTES

A	ACCESSIBLE ENTRANCE IDENTIFICATION SIGN
B	ROOM IDENTIFICATION SIGN
B1	ROOM IDENTIFICATION SIGN, ALTERNATE
C	BLANK SIGNAGE PLATE
D1	MAXIMUM OCCUPANCY SIGN, 10"x6"
D2	MAXIMUM OCCUPANCY SIGN, 20"x10"
E1	EXIT SIGN
E2	EXIT ROUTE SIGN
F	FIRE SPRINKLER RISER ROOM SIGN
G	ELECTRICAL ROOM
H	TOILET ROOM IDENTIFICATION DOOR SIGN
J	ACCESSIBLE TOILET ROOM WALL SIGN
K	ASSISTIVE LISTENING SYSTEM SIGN
L	EMERGENCY EVACUATION SIGN
M	NO SMOKING SIGN
N	FIRE EXTINGUISHER SIGN
O	NFPA 704 PLACARD
P	BUILDING EXTERIOR PARKING AREA AND VEHICULAR TRAFFIC SIGNS
Q	CONCEALED ITEM SIGN
R1	ROOM IDENTIFICATION SIGN WITH INSERT
R2	ROOM IDENTIFICATION SIGN WITH MULTIPLE INSERTS
	ILLUMINATED EXIT SIGN WITH DIRECTIONAL ARROW

SIGNAGE GENERAL NOTES

1. WHERE VISUAL IDENTIFICATION (SIGNAGE) IS PROVIDED FOR ROOMS OR SPACES, RAISED LETTERS (RAISED 1/32") SHALL BE PROVIDED AND SHALL BE ACCOMPANIED BY BRAILLE IN CONFORMANCE WITH THE FOLLOWING: CONTRACTED GRADE 2 BRAILLE SHALL BE USED AND SHALL COMPLY WITH CBC SECTIONS 11B-703.3 AND 11B-703.4.
   1.1. BRAILLE DOTS SHALL HAVE A DOMED OR ROUNDED SHAPE, CBC 11B-703.3.1.
   1.2. BRAILLE SHALL BE POSITIONED BELOW THE CORRESPONDING TEXT IN A HORIZONTAL FORMAT, FLUSH LEFT OR CENTERED. BRAILLE SHALL BE PLACED BELOW ENTIRE TEXT AND SEPARATED 3/8" MIN. AND 1/2" MAX. FROM ANY OTHER TACTILE CHARACTERS AND 3/8" MIN. FROM RAISED BORDERS AND DECORATIVE ELEMENTS.
   1.3. BRAILLE DIMENSIONS PER CBC TABLE 11B-703.3.1:
      1.3.1. DOT BASE DIA SHALL BE .059" - .063".
      1.3.2. DISTANCE BETWEEN TWO DOTS IN THE SAME CELL SHALL BE .100"
      1.3.3. DISTANCE BETWEEN CORRESPONDING DOTS IN ADJACENT CELLS SHALL BE .300"
      1.3.4. DOT HEIGHT SHALL BE .025" - .037"
      1.3.5. DISTANCE BETWEEN CORRESPONDING DOTS FROM ONE CELL DIRECTLY BELOW SHALL BE .395" TO .400"
2. SIGNS SHALL BE INSTALLED ON THE WALL ADJACENT TO THE LATCH OUTSIDE THE DOOR. WHERE THERE IS NO SPACE ON THE LATCH SIDE, SIGNS SHALL BE PLACED ON THE NEAREST ADJACENT WALL, PREFERABLE ON THE RIGHT.
3. MOUNTING HEIGHT SHALL BE 60" MAX. ABOVE THE FINISH FLOOR TO THE BASELINE OF HIGHEST RAISED CHARACTERS U.N.O. (CBC 11B-703.4.1). SIGNS WITH RAISED TEXT SHALL NOT BE DOOR MOUNTED.
4. OBSTRUCTIONS: A PERSON MUST BE ABLE TO APPROACH WITHIN 3" OF SIGN WITHOUT ENCOUNTERING PROTRUDING OBJECTS OR STANDING (SITTING) WITHIN SWING OF DOOR.
5. ACTUAL ROOM NAME / NUMBER TO BE PROVIDED BY OWNER'S REPRESENTATIVE.
6. ACTUAL SIGN DESIGN AND DIMENSIONS SHALL BE PROVIDED BY CONTRACTOR (OR SUB-CONTRACTOR) IN COORDINATION WITH OWNER'S REPRESENTATIVE.
7. SIGNS TO BE A.D.A. / C.B.C. COMPLIANT.
8. SIGN TEXT TO BE CONTRASTING COLOR TO SIGN FIELD.
9. PROVIDE BLANK SIGN ON OPPOSITE SIDE OF GLASS TO COVER SIGN MOUNTING WHEN SIGN IS MOUNTED TO SIDELIGHT OR WINDOW.
10. ILLUMINATED EMERGENCY EGRESS SIGN NOTES:
    10.1. INTERNALLY ILLUMINATED EXIT SIGNS SHALL COMPLY WITH 2019 CBC SECTION 1013.5
    10.2. EXTERNALLY ILLUMINATED EXIT SIGNES SHALL COMPLY WITH 2019 CBC SECTION 1013.6
    10.3. TEXT SHALL BE PLAINLY LEGIBLE LETTERS
    10.4. MINIMUM TEXT HEIGHT TO BE 6" MIN. WITH PRINCIPAL STROKE OF 3/4" MIN. AND SPACING BETWEEN LETTERS TO BE 3/8" MIN.
    10.5. IF A DIRECTIONAL INDICATOR (ARROW) IS PROVIDED, THE CONSTRUCTION WILL BE AS SUCH THAT THE INDICATOR CAN NOT BE READILY CHANGED
    10.6. SIGN TEXT WILL BE IN HIGH CONTRAST WITH THE BACKGROUND PER 2019 CBC SECTION 1013.6.1
    10.7. ALL EXIT SIGNS WILL BE ILLUMINATED AT ALL TIMES.
11. SEE ELECTRICAL PLANS FOR ADDITIONAL EMERGENCY EXIT LIGHT INFORMATION AND LOCATION.
12. ALL TACTILE SIGNS SHALL BE FIELD INSPECTED AFTER INSTALLATION PER 11B-703.1.1.2.

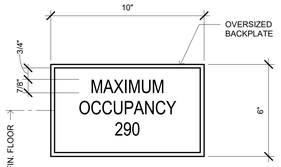

* VERIFY MAXIMUM OCCUPANCY AMOUNT PRIOR TO SIGN FABRICATION

D1 MAX OCCUPANCY
3"=1'-0"

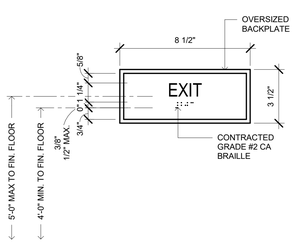

E1 EXIT SIGN
3"=1'-0"

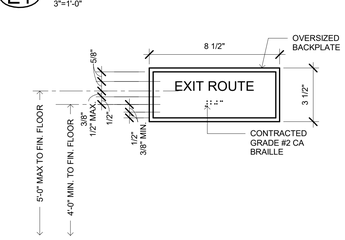

E2 EXIT ROUTE
3"=1'-0"

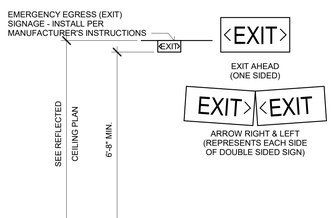

ILLUMINATED EXIT SIGN
NOT TO SCALE

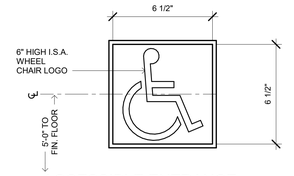

A ACCESSIBLE ENTRANCE IDENTIFICATION
3"=1'-0"
STICKER AT GLAZING

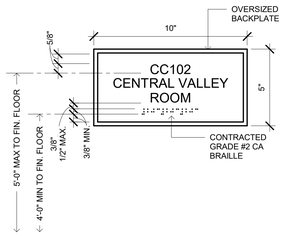

B ROOM IDENTIFICATION
3"=1'-0"

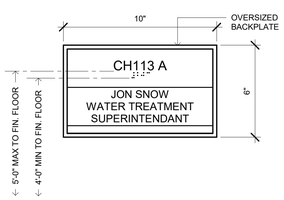

B1 ROOM IDENTIFICATION (ALTERNATE)
3"=1'-0"

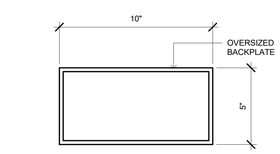

C BLANK SIGNAGE PLATE
3"=1'-0"

IDENTIFICATION STAMP
DIV. OF THE STATE ARCHITECT
APP: 02-118630 INC:
REVIEWED FOR
SS ☐ FLS ☐ ACS ☑
DATE: 04/13/2021

OFFICE OF THE STATE FIRE MARSHAL
APPROVED FIRE AND PANIC ONLY
Approval of this plan does not authorize or approve any omission or deviation from applicable regulations. Final approval is subject to field inspection. One set of approved plans shall be available on the project site at all times.
PERMIT NO. 20-N-2332-CP
REVIEWED BY: LEO CATAYLO, OSFM
DATE: 4 / /2021

GENERAL SERVICES
Department of General Services
State of California
Real Estate Services Division
Project Management & Development Branch
707 Third Street, Suite 4-105
West Sacramento, California 95605

NICHOLS MELBURG & ROSSETTO ARCHITECTS + ENGINEERS
300 Knollcrest Drive
Redding, CA. 96002
(530) 222-3300 (530) 222-3538 FAX
http://www.nmrdesign.com

Copyright © 2020
All ideas, designs, arrangements and plans indicated or represented by this drawing are owned by, and the property of, NICHOLS, MELBURG and ROSSETTO and were created, evolved and developed for use on, and in conjunction with, the specified project. None of such ideas, designs, arrangements or plans shall be used by, or disclosed to any person, firm or corporation for any purpose whatsoever without the written permission of NICHOLS, MELBURG and ROSSETTO.

LICENSE STAMPS

LICENSED ARCHITECT KYLE MATTY C-31504 REN. 10/31/21 STATE OF CALIFORNIA

CONSULTANT

DRAWING STATUS
CONSTRUCTION DOCUMENTS

ISSUE

No.	Date	Description
1	10/20/2020	INITIAL PLAN REVIEW
2	01/22/2021	AGENCY RESUBMITTAL
3	03/22/2021	AGENCY RESUBMITTAL

If drawing is not 30" x 42" it is a reduced print

PROJECT
RESIDENTIAL CENTER, UKIAH: REPLACEMENT OF EXISTING RESIDENTIAL CENTER
440 EAST HILL ROAD
WILLITS, CALIFORNIA 95490
MENDOCINO COUNTY
CALIFORNIA CONSERVATION CORP

Supervisor	Designed	Drawn
KJM	DMH	Author

DSA Application No.
02-118630

SHEET TITLE
INTERIOR DETAILS - SIGNAGE DETAILS

DGS Project Number: 0000000000001826
NMR Project Number: 18-6456

Reference North: NORTH
Sheet Scale: As indicated
Sheet Number: A965

ISSUE DATE
July 9, 2021

Plot Date: 5/19/2021 11:21:07 AM
File Name: BIM 360://CCC-Willits Residential Center/A_CCC-WRC-COMMON.rvt

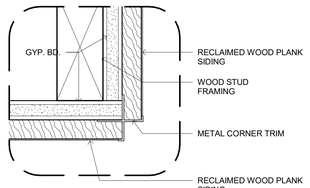

INTERIOR WOOD SIDING CORNER (ENLARGED) — A980 / 17
SCALE: 6" = 1'-0"

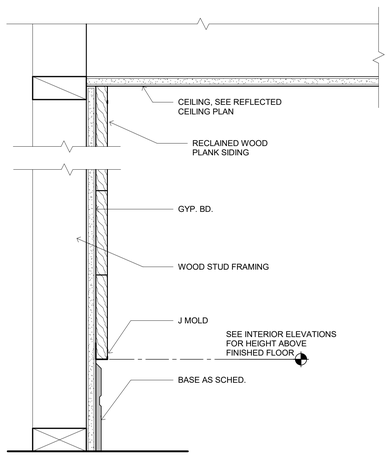

INTERIOR WOOD SIDING WALL SECTION — A980 / 14
SCALE: 3" = 1'-0"

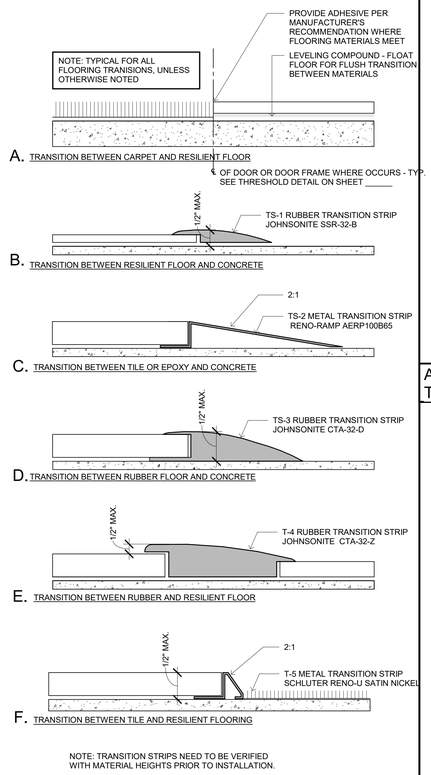

TRANSITION STRIPS — A980 / 10
SCALE: 12" = 1'-0"

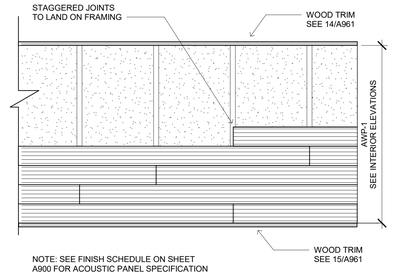

ACOUSTIC WALL PANEL - MULTI USE COURT TYPICAL LAYOUT — A980 / 5
SCALE: 1/2" = 1'-0"

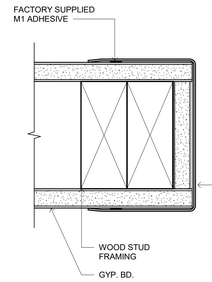

SURFACE MOUNTED STAINLESS STEEL END WALL CORNER GUARD — A980 / 1
SCALE: 6" = 1'-0"

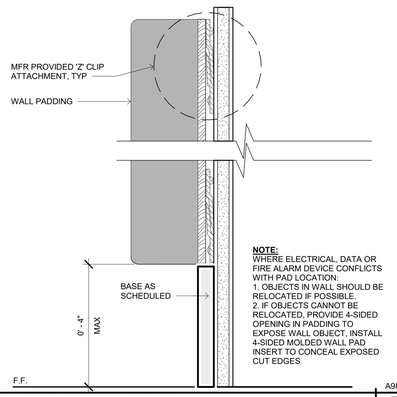

WALL PAD ATTACHMENT — A980 / 18
SCALE: 6" = 1'-0"

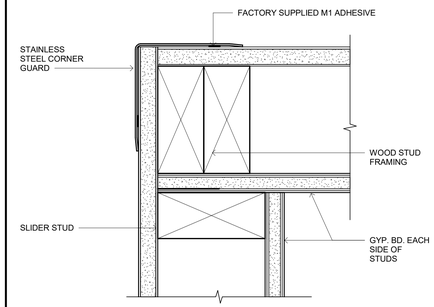

SURFACE MOUNTED STAINLESS STEEL CORNER GUARD — A980 / 2
SCALE: 6" = 1'-0"

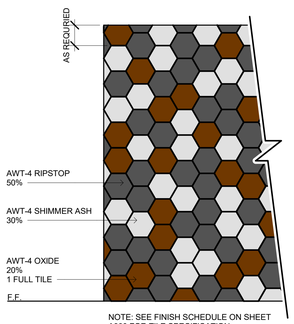

ACTIVITY AREA ACOUSTIC WALL TILE LAYOUT — A980 / 19
SCALE: 1/2" = 1'-0"

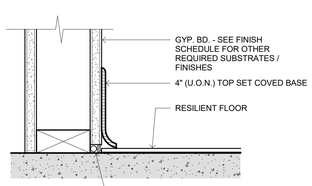

TOP SET BASE AT RESILIENT FLOORING — A980 / 11
SCALE: 3" = 1'-0"

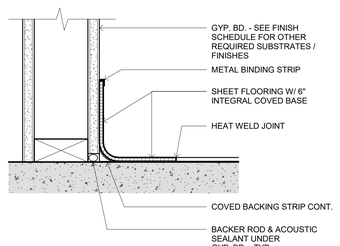

INTEGRAL COVED BASE — A980 / 7
SCALE: 3" = 1'-0"

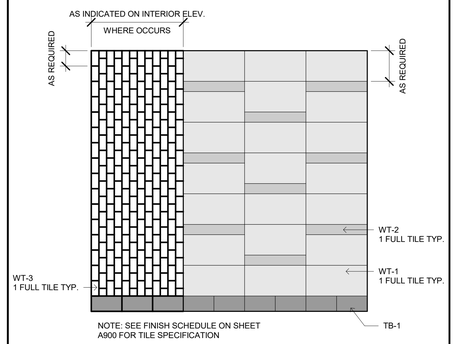

WALL TILE - TYPICAL FULL HEIGHT LAYOUT — A980 / 3
SCALE: 1/2" = 1'-0"

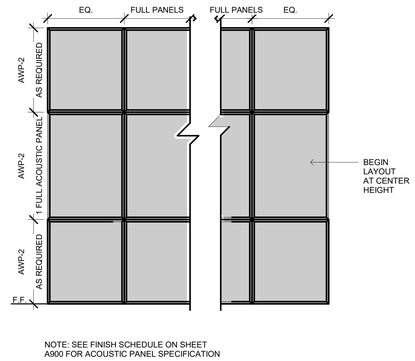

ACOUSTIC WALL PANEL FULL HEIGHT - TYPICAL LAYOUT — A980 / 20
SCALE: 1/2" = 1'-0"

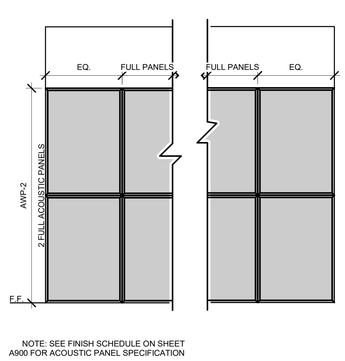

ACOUSTIC WALL PANEL PARTIAL HEIGHT-TYPICAL LAYOUT — A980 / 16
SCALE: 1/2" = 1'-0"

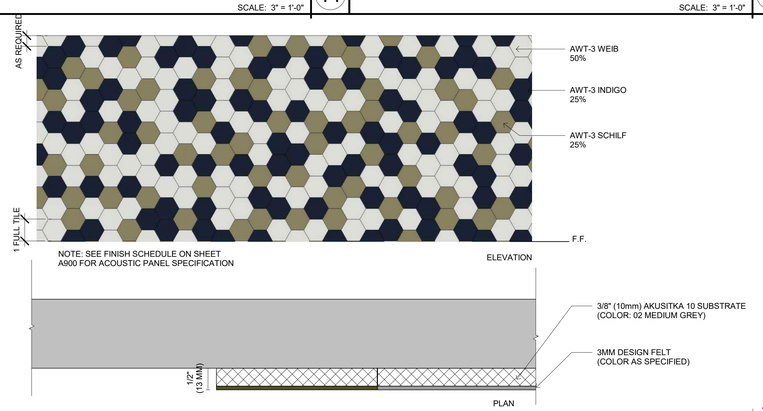

ACOUSTIC WALL TILE - COMPUTER ROOM LAYOUT — A980 / 8
SCALE: 1/2" = 1'-0"

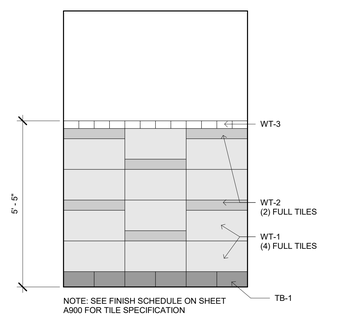

WALL TILE - TYPICAL HALF HEIGHT LAYOUT — A980 / 4
SCALE: 1/2" = 1'-0"

Plot Date: 2/16/2021 11:21:11 AM
File Name: BIM 360://CCC Willits Residential Center/A_CCC-WRC-COMMON.rvt

IDENTIFICATION STAMP
DIV. OF THE STATE ARCHITECT
APP: 02-118630 INC:
REVIEWED FOR
SS ☐ FLS ☐ ACS ☑
DATE: 04/13/2021

OFFICE OF THE STATE FIRE MARSHAL
APPROVED FIRE AND PANIC ONLY
Approval of this plan does not authorize or approve any omission or deviation from applicable regulations. Final approval is subject to field inspection. One set of approved plans shall be available on the project site at all times.
PERMIT NO. 20-N-2332-CP
REVIEWED BY: LEO CATAYLO, OSFM
DATE: 4 / /2021

DGS GENERAL SERVICES
Department of General Services
State of California
Real Estate Services Division
Project Management & Development Branch
707 Third Street, Suite 4-105
West Sacramento, California 95605

NICHOLS MELBURG & ROSSETTO ARCHITECTS + ENGINEERS
300 Knollcrest Drive
Redding, CA. 96002
(530) 222-3300 (530) 222-3538 FAX
http://www.nmrdesign.com

Copyright © 2020
All ideas, designs, arrangements and plans indicated or represented by this drawing are owned by, and the property of, NICHOLS, MELBURG and ROSSETTO and were created, evolved and developed for use on, and in conjunction with, the specified project. None of such ideas, designs, arrangements or plans shall be used by, or disclosed to any person, firm or corporation for any purpose whatsoever without the written permission of NICHOLS, MELBURG and ROSSETTO

LICENSE STAMPS

LICENSED ARCHITECT KYLE MATTHEW ROSSETTO C-27504 REN. 10/31/21 STATE OF CALIFORNIA

CONSULTANT

DRAWING STATUS
CONSTRUCTION DOCUMENTS

ISSUE

No.	Date	Description
1	10/20/2020	INITIAL PLAN REVIEW
2	01/22/2021	AGENCY RESUBMITTAL
3	03/22/2021	AGENCY RESUBMITTAL

If drawing is not 30" x 42" it is a reduced print

PROJECT
RESIDENTIAL CENTER, UKIAH: REPLACEMENT OF EXISTING RESIDENTIAL CENTER
440 EAST HILL ROAD
WILLITS, CALIFORNIA 95490
MENDOCINO COUNTY
CALIFORNIA CONSERVATION CORP

Supervisor	Designed	Drawn
KJM	DMH	Author

DSA Application No.
02-118630

SHEET TITLE
WALL PROTECTION

DGS Project Number	NMR Project Number
000000000001826	18-6456

Reference North — Sheet Scale: As indicated
Sheet Number: A980

ISSUE DATE
July 9, 2021

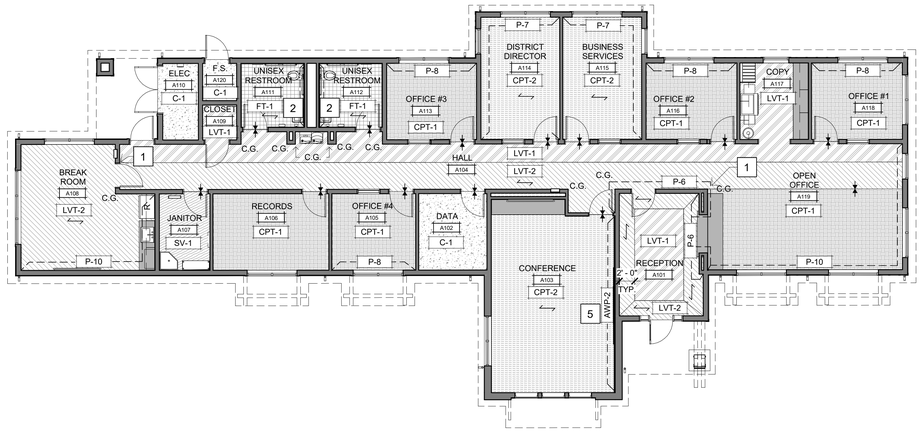

ADMINISTRATION BLDG - FINISH FLOOR PLAN

SCALE: 1/8" = 1'-0"

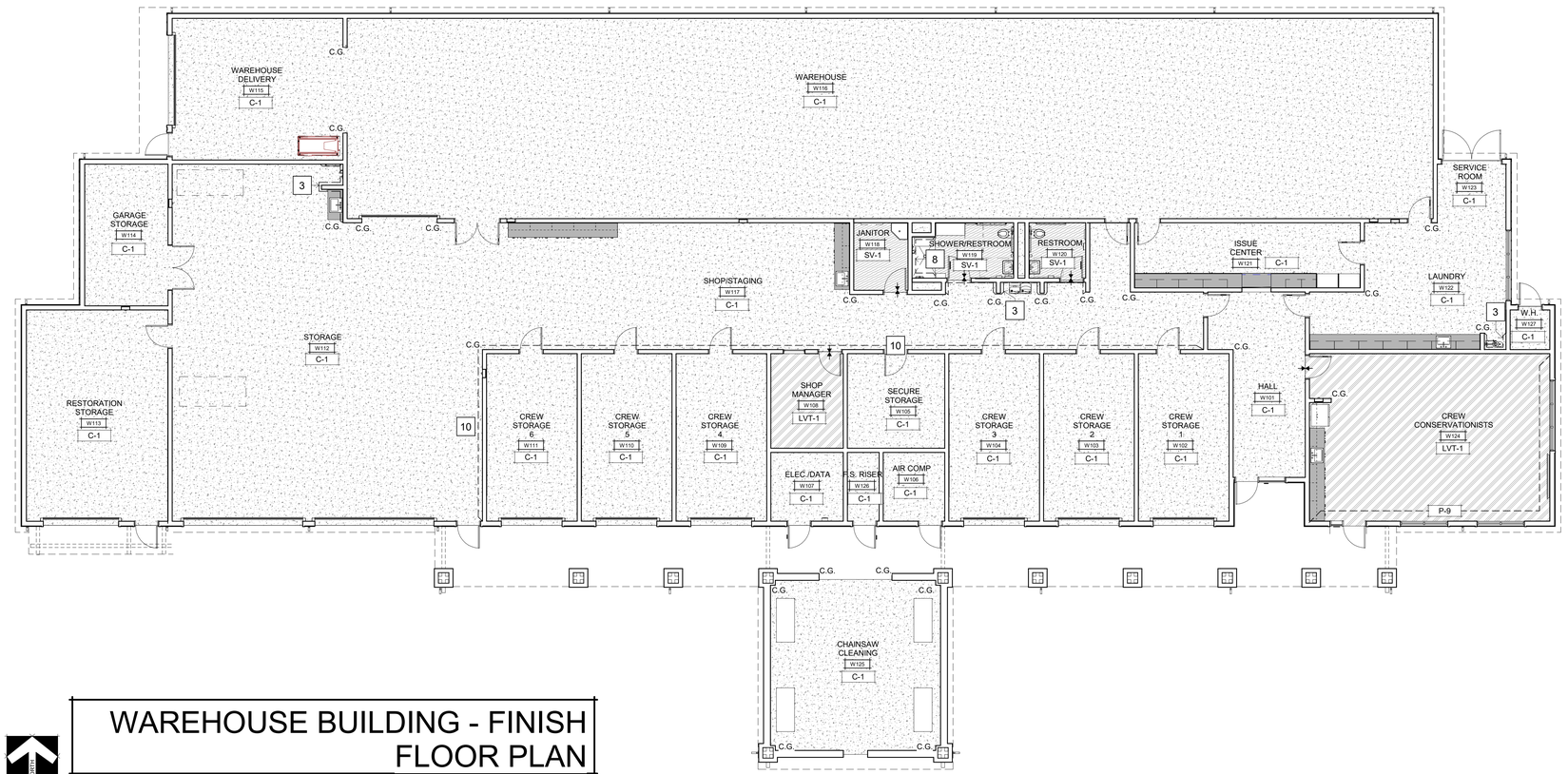

WAREHOUSE BUILDING - FINISH FLOOR PLAN

SCALE: 1/8" = 1'-0"

SHEET NOTES

1. ALIGN WITH CORNER
2. FULL HEIGHT TILE
3. FULL HEIGHT FRP
4. SEE SHEET A980 DETAIL 19 FOR ACOUSTIC WALL TILE LAYOUT
5. SEE SHEET A980 DETAIL 20 FOR FULL HEIGHT AWP-2 LAYOUT
6. SEE SHEET A980 DETAIL 8 FOR ACOUSTIC WALL TILE LAYOUT
7. SEE SHEET A980 DETAIL 16 FOR AWP-2 PARTIAL HEIGHT LAYOUT
8. FULL HEIGHT SOLID SURFACE MATERIAL
9. SEE SHEET A980 DETAIL 14 FOR INTERIOR WOOD SIDING ATTACHMENT/LAYOUT.
10. PAINT PLYWOOD AND BASE P-7
11. SEE SHEET A980 DETAIL 17 FOR CORNER TRANSITIONS

GENERAL FINISH NOTES

A. SEE SPECIFICATIONS FOR ACCEPTABLE EQUAL MANUFACTURERS AND PRODUCTS. SEE SPECIFICATIONS FOR SUBSTITUTION PROCEDURES WHICH REQUIRE WRITTEN APPROVAL FROM ARCHITECT.
B. RESILIENT WALL BASE SHALL BE ROLL GOODS IN THE SPECIFIED HEIGHT AND PROFILE.
C. THIS SHEET TO BE USED IN CONJUNCTION WITH THE FINISH SCHEDULE, FURNISHINGS MANUAL, AND PROJECT MANUAL.
D. FOR ALL PRODUCTS INSTALLED, NOTE INDUSTRY STANDARDS AND MANUFACTURER SPECIFICATIONS FOR INSTALLATION.
E. DO NOT PAINT ANY FACTORY FINISHED ITEMS.
F. MISCELLANEOUS METAL, I.E. RETURN AND AIR SUPPLY GRILLES,EXPANSION JOINTS, ETC. SHALL BE PAINTED TO MATCH THE ADJACENT WALL SURFACE.
G. ALL INTERIOR FINISHES SHALL MEET CLASS A FLAME SPREAD RATING OF25 OR LESS AND SHALL HAVE A SMOKE FOR WD-1: PER TABLE 803.13, NOTE A CLASS C INTERIOR FINISH MATERIALS SHALL BE PERMITTED FOR WAINSCOTTING OR PANELING OF NOT MORE THAN 1,000 SQ. FT. OF APPLIED SURFACE AREA WHERE APPLIED DIRECTLY TO CONCUMBUSTIBLE BASE AND FIREBLOCKED AS REQUIRED BY SECTION 803.15.1
H. DEVELOPMENT OF 250 OR LESS.
I. ALL FLOOR REDUCER / THRESHOLDS SHALL BE LOCATED AT THE CENTER LINE OF DOOR WHEN IN THE CLOSED POSITION AND MEET ACCESSIBILITY REQUIREMENTS.
J. ALL INTERIOR FLOORING SHALL MEET CLASS I AND CLASS II.
K. CAULK ALL DOORS, FRAMES AND MILLWORK. COLOR TO MATCH ADJACENT SURFACE.
L. ALL SURFACES TO BE PAINTED SHALL RECEIVE TWO COATS. PREP SURFACE PER PAINT MANUFACTURER'S RECOMMENDATIONS. ALL METAL TRIM AND SASH SHALL RECEIVE TWO COATS OF PAINT OVER MANUFACTURER RECOMMENDED PRIMER COAT. ALL APPLICATIONS SHALL USE MANUFACTURER RECOMMENDED EXTENDER AGENTS IN ORDER TO REDUCE BRUSH MARKS.
M. ALL COLORS SHALL BE AS PER THE FINISH SCHEDULE UNLESS WRITTEN APPROVAL FROM THE ARCHITECT / DESIGNER.
N. THE WORD "CLEAR" INDICATES CRITICAL DIMENSIONS FOR ACCESSIBILITY EQUIPMENT OR FUNCTIONAL CLEARANCES FROM FACE OF FINISH TO FACE OF FINISH.
O. THRESHOLDS AT DOORWAYS AND TRANSITION STRIPS SHALL NOT EXCEED 1/2" IN HEIGHT. RAISED THRESHOLDS AND FLOOR LEVEL CHANGES AT ACCESSIBLE DOORWAYS SHALL BE BEVELED WITH A SLOPE NO GREATER THAN 1:2.
P. FRAME OF DOOR LITE SHALL BE PAINTED TO MATCH ADJACENT DOOR FINISH.
Q. GROUT JOINT FROM FLOOR TILE TO WALL TILE TO ALIGN WHERE POSSIBLE.

FINISH LEGEND

- C-1/C-2
- CPT-1
- CPT-2
- CPT-3
- EPY-1
- FT-1
- LVT-1
- LVT-2
- RAF-1
- RAF-2
- SSM-3
- SV-1
- TRANSITION OF FLOORING MATERIAL SEE DETAIL 10/A980
- FINISH TAG (SEE FINISH SCHEDULE FOR ALL FINISH LOCATIONS)
- LOCATION OF ACCENT WALL FINISH
- DIRECTION OF FLOORING PATTERN

IDENTIFICATION STAMP
DIV. OF THE STATE ARCHITECT
APP: 02-118630 INC:
REVIEWED FOR
SS ☐ FLS ☐ ACS ☑
DATE: 04/13/2021

OFFICE OF THE STATE FIRE MARSHAL
APPROVED FIRE AND PANIC ONLY
Approval of this plan does not authorize or approve any omission or deviation from applicable regulations. Final approval is subject to field inspection. One set of approved plans shall be available on the project site at all times.
PERMIT NO: 20-N-2332-CP
REVIEWED BY: LEO CATAYLO, OSFM
DATE: 4 / /2021

DGS GENERAL SERVICES
Department of General Services
State of California
Real Estate Services Division
Project Management & Development Branch
707 Third Street, Suite 4-105
West Sacramento, California 95605

NICHOLS MELBURG & ROSSETTO
ARCHITECTS + ENGINEERS
300 Knollcrest Drive
Redding, CA. 96002
(530) 222-3300 (530) 222-3538 FAX
http://www.nmrdesign.com

Copyright © 2020
All ideas, designs, arrangements and plans indicated or represented by this drawing are owned by, and the property of, NICHOLS, MELBURG and ROSSETTO and were created, evolved and developed for use on, and in conjunction with, the specified project. None of such ideas, designs, arrangements or plans shall be used by, or disclosed to any person, firm or corporation for any purpose whatsoever without the written permission of NICHOLS, MELBURG and ROSSETTO

LICENSE STAMPS

LICENSED ARCHITECT KYLE MATTHEW ROSSETTO C-27504 REN: 10/31/21 STATE OF CALIFORNIA

CONSULTANT

DRAWING STATUS
CONSTRUCTION DOCUMENTS

ISSUE

No.	Date	Description
1	10/20/2020	INITIAL PLAN REVIEW
2	01/22/2021	AGENCY RESUBMITTAL
3	03/22/2021	AGENCY RESUBMITTAL

If drawing is not 30" x 42" it is a reduced print

PROJECT
RESIDENTIAL CENTER, UKIAH: REPLACEMENT OF EXISTING RESIDENTIAL CENTER
440 EAST HILL ROAD
WILLITS, CALIFORNIA 95490
MENDOCINO COUNTY
CALIFORNIA CONSERVATION CORP

Supervisor	Designed	Drawn
		Author

DSA Application No.
02-118630

SHEET TITLE
FINISH FLOOR PLAN - ADMIN & WAREHOUSE BUILDING

DGS Project Number: 000000000001826
NMR Project Number: 18-6456

Reference North
Sheet Scale: As indicated
Sheet Number: ID201

ISSUE DATE
July 9, 2021

Plot Date: 3/19/2021 1:45:42 PM
File Name: I:\NM 360\CCC\Willits Residential Center\A_CCC-WRC-COMMON.rvt

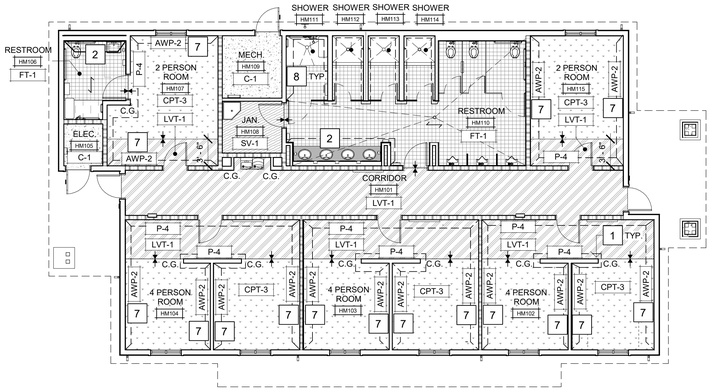

MEN HOUSING - FINISH FLOOR PLAN

SCALE: 1/8" = 1'-0"

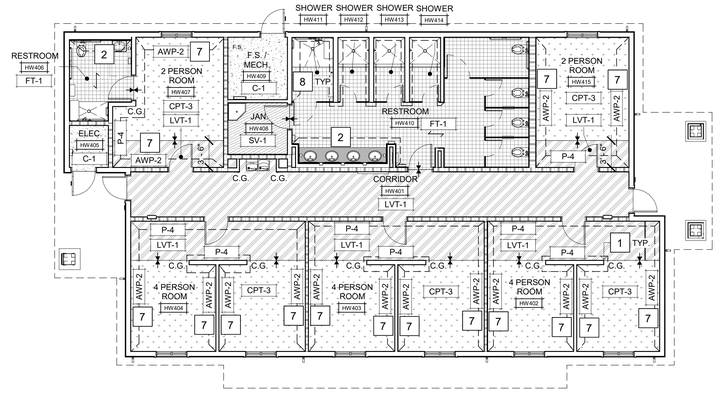

WOMEN HOUSING -FINISH FLOOR PLAN

SCALE: 1/8" = 1'-0"

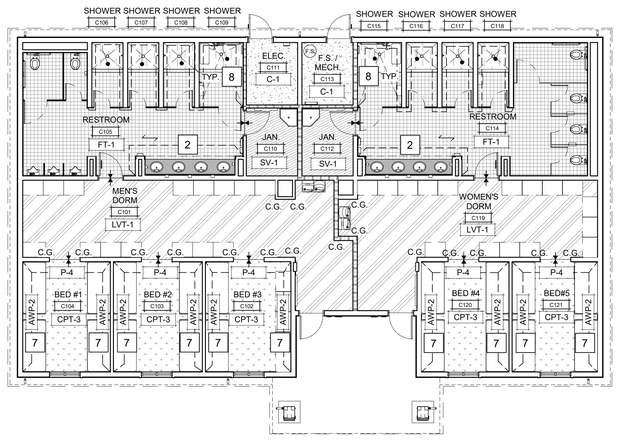

COMET - FINISH FLOOR PLAN

SCALE: 1/8" = 1'-0"

SHEET NOTES

1. ALIGN WITH CORNER
2. FULL HEIGHT TILE
3. FULL HEIGHT FRP
4. SEE SHEET A980 DETAIL 19 FOR ACOUSTIC WALL TILE LAYOUT
5. SEE SHEET A980 DETAIL 20 FOR FULL HEIGHT AWP-2 LAYOUT
6. SEE SHEET A980 DETAIL 8 FOR ACOUSTIC WALL TILE LAYOUT
7. SEE SHEET A980 DETAIL 16 FOR AWP-2 PARTIAL HEIGHT LAYOUT
8. FULL HEIGHT SOLID SURFACE MATERIAL
9. SEE SHEET A980 DETAIL 14 FOR INTERIOR WOOD SIDING ATTACHMENT/LAYOUT.
10. PAINT PLYWOOD AND BASE P-7
11. SEE SHEET A980 DETAIL 17 FOR CORNER TRANSITIONS

GENERAL FINISH NOTES

A. SEE SPECIFICATIONS FOR ACCEPTABLE EQUAL MANUFACTURERS AND PRODUCTS. SEE SPECIFICATIONS FOR SUBSTITUTION PROCEDURES WHICH REQUIRE WRITTEN APPROVAL FROM ARCHITECT.
B. RESILIENT WALL BASE SHALL BE ROLL GOODS IN THE SPECIFIED HEIGHT AND PROFILE.
C. THIS SHEET TO BE USED IN CONJUNCTION WITH THE FINISH SCHEDULE, FURNISHINGS MANUAL AND PROJECT MANUAL.
D. FOR ALL PRODUCTS INSTALLED, NOTE INDUSTRY STANDARDS AND MANUFACTURER SPECIFICATIONS FOR INSTALLATION.
E. DO NOT PAINT ANY FACTORY FINISHED ITEMS.
F. MISCELLANEOUS METAL, I.E. RETURN AND AIR SUPPLY GRILLES,EXPANSION JOINTS, ETC. SHALL BE PAINTED TO MATCH THE ADJACENT WALL SURFACE.
G. ALL INTERIOR FINISHES SHALL MEET CLASS A FLAME SPREAD RATING OF25 OR LESS AND SHALL HAVE A SMOKE FOR WD-1: PER TABLE 803.13, NOTE .A CLASS C INTERIOR FINISH MATERIALS SHALL BE PERMITTED FOR WAINSCOTTING OR PANELING OF NOT MORE THAN 1,000 SQ. FT. OF APPLIED SURFACE AREA WHERE APPLIED DIRECTLY TO CONCUMBUSTIBLE BASE AND FIREBLOCKED AS REQUIRED BY SECTION 803.15.1
H. DEVELOPMENT OF 250 OR LESS.
I. ALL FLOOR REDUCER / THRESHOLDS SHALL BE LOCATED AT THE CENTER LINE OF DOOR WHEN IN THE CLOSED POSITION AND MEET ACCESSIBILITY REQUIREMENTS.
J. ALL INTERIOR FLOORING SHALL MEET CLASS I AND CLASS II.
K. CAULK ALL DOORS, FRAMES AND MILLWORK. COLOR TO MATCH ADJACENT SURFACE.
L. ALL SURFACES TO BE PAINTED SHALL RECEIVE TWO COATS. PREP SURFACE PER PAINT MANUFACTURER'S RECOMMENDATIONS. ALL METAL TRIM AND SASH SHALL RECEIVE TWO COATS OF PAINT OVER MANUFACTURER RECOMMENDED PRIMER COAT. ALL APPLICATIONS SHALL USE MANUFACTURER RECOMMENDED EXTENDER AGENTS IN ORDER TO REDUCE BRUSH MARKS.
M. ALL COLORS SHALL BE AS PER THE FINISH SCHEDULE UNLESS WRITTEN APPROVAL FROM THE ARCHITECT / DESIGNER.
N. THE WORD "CLEAR" INDICATES CRITICAL DIMENSIONS FOR ACCESSIBILITY EQUIPMENT OR FUNCTIONAL CLEARANCES FROM FACE OF FINISH TO FACE OF FINISH.
O. THRESHOLDS AT DOORWAYS AND TRANSITION STRIPS SHALL NOT EXCEED 1/2" IN HEIGHT. RAISED THRESHOLDS AND FLOOR LEVEL CHANGES AT ACCESSIBLE DOORWAYS SHALL BE BEVELED WITH A SLOPE NO GREATER THAN 1:2.
P. FRAME OF DOOR LITE SHALL BE PAINTED TO MATCH ADJACENT DOOR FINISH.
Q. GROUT JOINT FROM FLOOR TILE TO WALL TILE TO ALIGN WHERE POSSIBLE.

FINISH LEGEND

- C-1/C-2
- CPT-1
- CPT-2
- CPT-3
- EPY-1
- FT-1
- LVT-1
- LVT-2
- RAF-1
- RAF-2
- SSM-3
- SV-1
- TRANSITION OF FLOORING MATERIAL SEE DETAIL 10/A980
- FINISH — FINISH TAG (SEE FINISH SCHEDULE FOR ALL FINISH LOCATIONS)
- FINISH — LOCATION OF ACCENT WALL FINISH
- DIRECTION OF FLOORING PATTERN

IDENTIFICATION STAMP
DIV. OF THE STATE ARCHITECT
APP: 02-118630 INC:
REVIEWED FOR
SS ☐ FLS ☐ ACS ☑
DATE: 04/13/2021

OFFICE OF THE STATE FIRE MARSHAL
APPROVED FIRE AND PANIC ONLY
Approval of this plan does not authorize or approve any omission or deviation from applicable regulations. Final approval is subject to field inspection. One set of approved plans shall be available on the project site at all times.
PERMIT NO. 20 N 2332 CP
REVIEWED BY: LEO CATAYLO, OSFM
DATE: 4 / /2021

DGS GENERAL SERVICES
Department of General Services
State of California
Real Estate Services Division
Project Management & Development Branch
707 Third Street, Suite 4-105
West Sacramento, California 95605

NICHOLS MELBURG & ROSSETTO ARCHITECTS + ENGINEERS
300 Knollcrest Drive
Redding, CA. 96002
(530) 222-3300 (530) 222-3538 FAX
http://www.nmrdesign.com

Copyright © 2020
All ideas, designs, arrangements and plans indicated or represented by this drawing are owned by, and the property of, NICHOLS, MELBURG and ROSSETTO and were created, evolved and developed for use on, and in conjunction with, the specified project. None of such ideas, designs, arrangements or plans shall be used by, or disclosed to any person, firm or corporation for any purpose whatsoever without the written permission of NICHOLS, MELBURG and ROSSETTO.

LICENSE STAMPS

LICENSED ARCHITECT KYLE MATTHEW ROSSETTO C-27504 REN. 10/31/21 STATE OF CALIFORNIA

CONSULTANT

DRAWING STATUS
CONSTRUCTION DOCUMENTS

ISSUE

No.	Date	Description
1	10/20/2020	INITIAL PLAN REVIEW
2	01/22/2021	AGENCY RESUBMITTAL
3	03/22/2021	AGENCY RESUBMITTAL

If drawing is not 30" x 42" it is a reduced print

PROJECT
RESIDENTIAL CENTER, UKIAH: REPLACEMENT OF EXISTING RESIDENTIAL CENTER
440 EAST HILL ROAD
WILLITS, CALIFORNIA 95490
MENDOCINO COUNTY
CALIFORNIA CONSERVATION CORP

Supervisor	Designed	Drawn
		Author

DSA Application No.
02-118630

SHEET TITLE
FINISH FLOOR PLAN - COMET & HOUSING BUILDINGS

DGS Project Number	NMR Project Number
000000000001826	18-6456

Reference North
Sheet Scale: As indicated
Sheet Number: ID202

ISSUE DATE
July 9, 2021

Plot Date: 3/19/2021 1:56:14 PM
File Name: 3184.300 /CCC-Willits Residential Center/A_CCC-WRC-COMMON.rvt

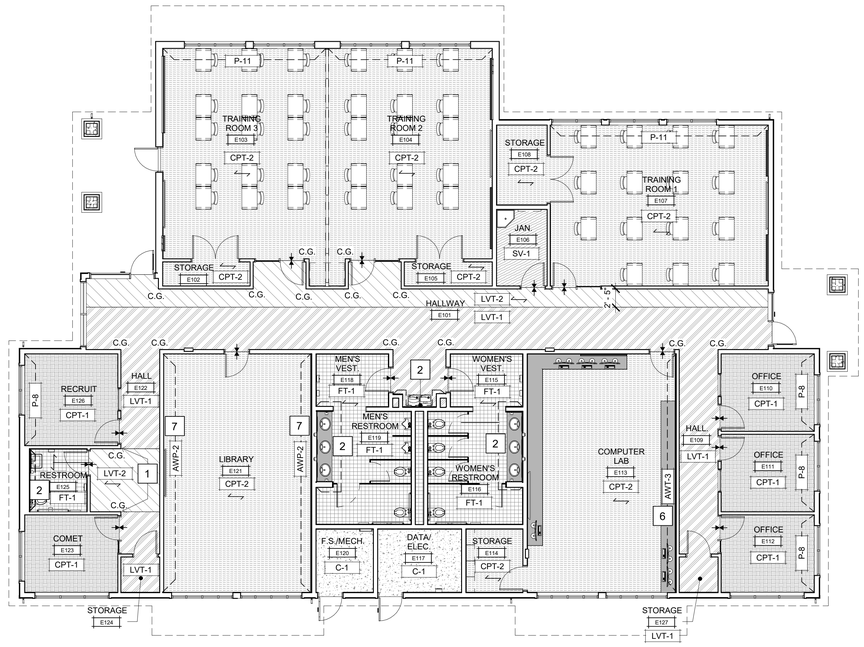

NORTH

EDUCATION BUILDING - FINISH FLOOR PLAN

SCALE: 1/8" = 1'-0"

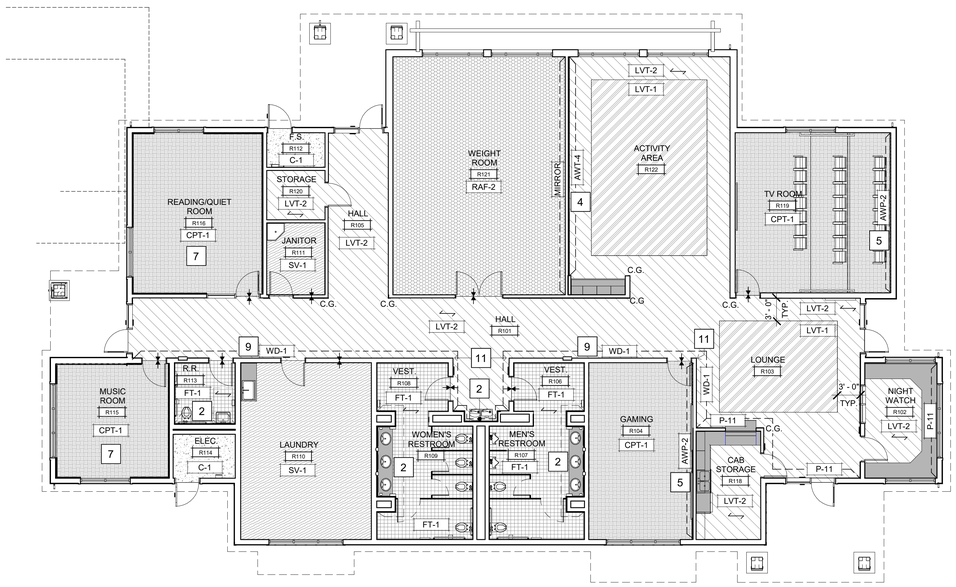

NORTH

RECREATION BUILDING - FINISH FLOOR PLAN

SCALE: 1/8" = 1'-0"

SHEET NOTES

1. ALIGN WITH CORNER
2. FULL HEIGHT TILE
3. FULL HEIGHT FRP
4. SEE SHEET A980 DETAIL 19 FOR ACOUSTIC WALL TILE LAYOUT
5. SEE SHEET A980 DETAIL 20 FOR FULL HEIGHT AWP-2 LAYOUT
6. SEE SHEET A980 DETAIL 8 FOR ACOUSTIC WALL TILE LAYOUT
7. SEE SHEET A980 DETAIL 16 FOR AWP-2 PARTIAL HEIGHT LAYOUT
8. FULL HEIGHT SOLID SURFACE MATERIAL
9. SEE SHEET A980 DETAIL 14 FOR INTERIOR WOOD SIDING ATTACHMENT/LAYOUT.
10. PAINT PLYWOOD AND BASE P-7
11. SEE SHEET A980 DETAIL 17 FOR CORNER TRANSITIONS

GENERAL FINISH NOTES

A. SEE SPECIFICATIONS FOR ACCEPTABLE EQUAL MANUFACTURERS AND PRODUCTS. SEE SPECIFICATIONS FOR SUBSTITUTION PROCEDURES WHICH REQUIRE WRITTEN APPROVAL FROM ARCHITECT.
B. RESILIENT WALL BASE SHALL BE ROLL GOODS IN THE SPECIFIED HEIGHT AND PROFILE.
C. THIS SHEET TO BE USED IN CONJUNCTION WITH THE FINISH SCHEDULE, FURNISHINGS MANUAL, AND PROJECT MANUAL. FOR ALL PRODUCTS INSTALLED, NOTE INDUSTRY STANDARDS AND MANUFACTURER SPECIFICATIONS FOR INSTALLATION.
D. DO NOT PAINT ANY FACTORY FINISHED ITEMS.
E. MISCELLANEOUS METAL, I.E. RETURN AND AIR SUPPLY GRILLES,EXPANSION JOINTS, ETC. SHALL BE PAINTED TO MATCH THE ADJACENT WALL SURFACE.
F. ALL INTERIOR FINISHES SHALL MEET CLASS A FLAME SPREAD RATING OF25 OR LESS AND SHALL HAVE A SMOKE FOR WD-1: PER TABLE 803.13, NOTE ,A CLASS C INTERIOR FINISH MATERIALS SHALL BE PERMITTED FOR WAINSCOTTING OR PANELING OF NOT MORE THAN 1,000 SQ. FT. OF APPLIED SURFACE AREA WHERE APPLIED DIRECTLY TO CONCUMBUSTIBLE BASE AND FIREBLOCKED AS REQUIRED BY SECTION 803.15.1
G. DEVELOPMENT OF 250 OR LESS.
H. ALL FLOOR REDUCER / THRESHOLDS SHALL BE LOCATED AT THE CENTER LINE OF DOOR WHEN IN THE CLOSED POSITION AND MEET ACCESSIBILITY REQUIREMENTS.
I. ALL INTERIOR FLOORING SHALL MEET CLASS I AND CLASS II.
J. CAULK ALL DOORS, FRAMES AND MILLWORK. COLOR TO MATCH ADJACENT SURFACE.
K. ALL SURFACES TO BE PAINTED SHALL RECEIVE TWO COATS. PREP SURFACE PER PAINT MANUFACTURER'S RECOMMENDATIONS. ALL METAL TRIM AND SASH SHALL RECEIVE TWO COATS OF PAINT OVER MANUFACTURER RECOMMENDED PRIMER COAT. ALL APPLICATIONS SHALL USE MANUFACTURER RECOMMENDED EXTENDER AGENTS IN ORDER TO REDUCE BRUSH MARKS.
L. ALL COLORS SHALL BE AS PER THE FINISH SCHEDULE UNLESS WRITTEN APPROVAL FROM THE ARCHITECT / DESIGNER.
M. THE WORD "CLEAR" INDICATES CRITICAL DIMENSIONS FOR ACCESSIBILITY EQUIPMENT OR FUNCTIONAL CLEARANCES FROM FACE OF FINISH TO FACE OF FINISH.
N. THRESHOLDS AT DOORWAYS AND TRANSITION STRIPS SHALL NOT EXCEED 1/2" IN HEIGHT. RAISED THRESHOLDS AND FLOOR LEVEL CHANGES AT ACCESSIBLE DOORWAYS SHALL BE BEVELED WITH A SLOPE NO GREATER THAN 1:2
O. FRAME OF DOOR LITE SHALL BE PAINTED TO MATCH ADJACENT DOOR FINISH.
P. GROUT JOINT FROM FLOOR TILE TO WALL TILE TO ALIGN WHERE POSSIBLE.

FINISH LEGEND

- C-1/C-2
- CPT-1
- CPT-2
- CPT-3
- EPY-1
- FT-1
- LVT-1
- LVT-2
- RAF-1
- RAF-2
- SSM-3
- SV-1
- TRANSITION OF FLOORING MATERIAL SEE DETAIL 10/A980
- FINISH — FINISH TAG (SEE FINISH SCHEDULE FOR ALL FINISH LOCATIONS)
- FINISH — LOCATION OF ACCENT WALL FINISH
- DIRECTION OF FLOORING PATTERN

IDENTIFICATION STAMP
DIV. OF THE STATE ARCHITECT
APP: 02-118630 INC:
REVIEWED FOR
SS ☐ FLS ☐ ACS ☑
DATE: 04/13/2021

OFFICE OF THE STATE FIRE MARSHAL
APPROVED FIRE AND PANIC ONLY
Approval of this plan does not authorize or approve any omission or deviation from applicable regulations. Final approval is subject to field inspection. One set of approved plans shall be available on the project site at all times.
PERMIT NO. 20-N-2332-CP
REVIEWED BY: LEO CATAYLO, OSFM
DATE: 4 / /2021

GENERAL SERVICES
Department of General Services
State of California
Real Estate Services Division
Project Management & Development Branch
707 Third Street, Suite 4-105
West Sacramento, California 95605

NICHOLS MELBURG & ROSSETTO
ARCHITECTS + ENGINEERS
300 Knollcrest Drive
Redding, CA. 96002
(530) 222-3300 (530) 222-3538 FAX
http://www.nmrdesign.com

Copyright © 2020
All ideas, designs, arrangements and plans indicated or represented by this drawing are owned by, and the property of, NICHOLS, MELBURG and ROSSETTO and were created, evolved and developed for use on, and in conjunction with, the specified project. None of such ideas, designs, arrangements or plans shall be used by, or disclosed to any person, firm or corporation for any purpose whatsoever without the written permission of NICHOLS, MELBURG and ROSSETTO

LICENSE STAMPS

LICENSED ARCHITECT KYLE MATTY C-21504 RENEWAL 10/31/21 STATE OF CALIFORNIA

CONSULTANT

DRAWING STATUS
CONSTRUCTION DOCUMENTS

ISSUE

No.	Date	Description
1	10/20/2020	INITIAL PLAN REVIEW
2	01/22/2021	AGENCY RESUBMITTAL
3	03/22/2021	AGENCY RESUBMITTAL

If drawing is not 30" x 42" it is a reduced print

PROJECT
RESIDENTIAL CENTER, UKIAH: REPLACEMENT OF EXISTING RESIDENTIAL CENTER
440 EAST HILL ROAD
WILLITS, CALIFORNIA 95490
MENDOCINO COUNTY
CALIFORNIA CONSERVATION CORP

Supervisor	Designed	Drawn
		Author

DSA Application No.
02-118630

SHEET TITLE
FINISH FLOOR PLAN - EDUCATION & RECREATION BUILDING

DGS Project Number: 000000000001826
NMR Project Number: 18-6456

Reference North
Sheet Scale: As indicated
Sheet Number: ID203

ISSUE DATE
July 9, 2021

Plot Date: 5/19/2021 1:46:11 PM
File Name: 8184.900 (CCC-Willits Residential Center)\A_CCC-WRC-COMMON.rvt

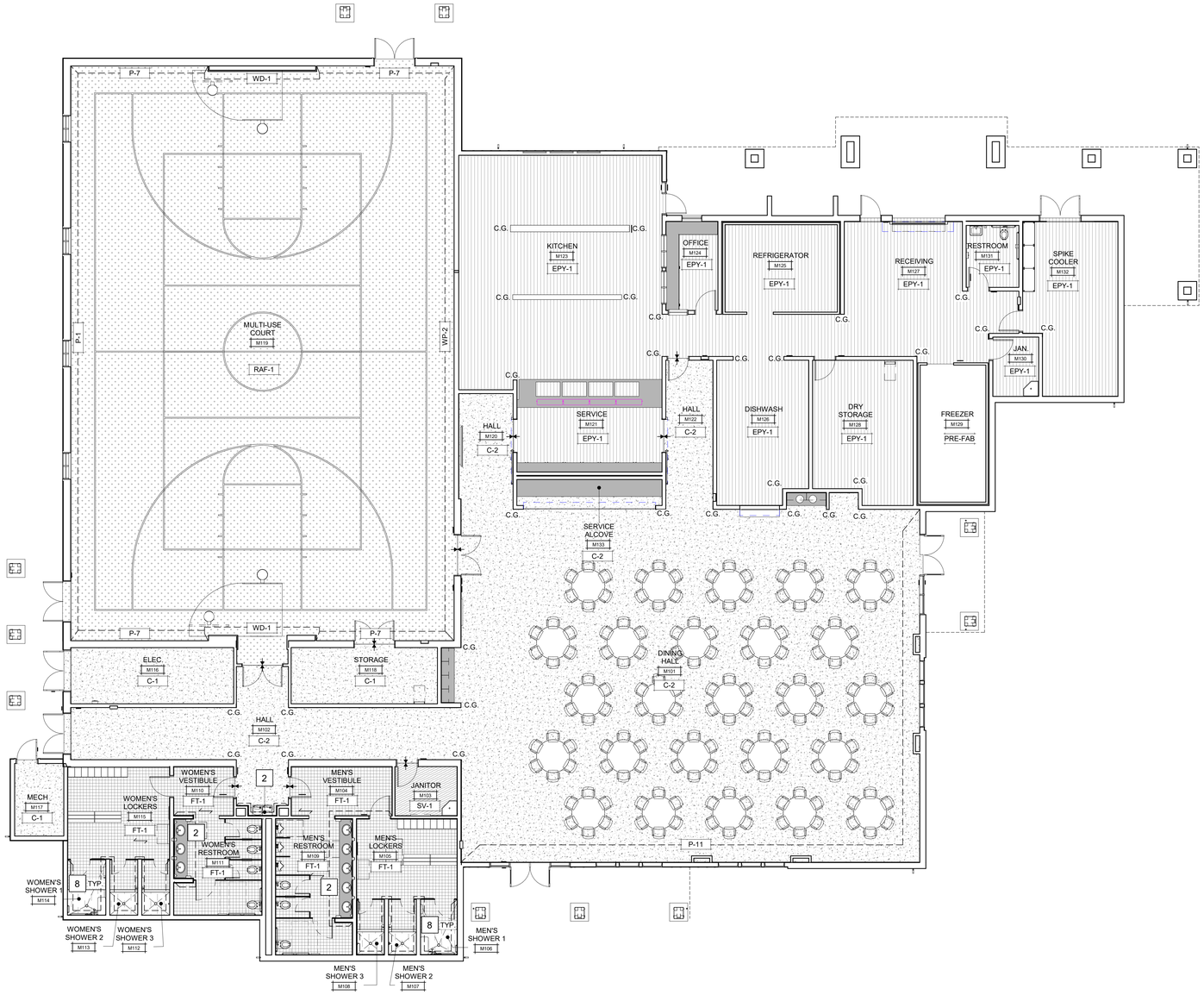

NORTH

MULTI-PURPOSE BLDG - FINISH FLOOR PLAN

SCALE: 1/8" = 1'-0"

SHEET NOTES

1. ALIGN WITH CORNER
2. FULL HEIGHT TILE
3. FULL HEIGHT FRP
4. SEE SHEET A980 DETAIL 19 FOR ACOUSTIC WALL TILE LAYOUT
5. SEE SHEET A980 DETAIL 20 FOR FULL HEIGHT AWP-2 LAYOUT
6. SEE SHEET A980 DETAIL 8 FOR ACOUSTIC WALL TILE LAYOUT
7. SEE SHEET A980 DETAIL 16 FOR AWP-2 PARTIAL HEIGHT LAYOUT
8. FULL HEIGHT SOLID SURFACE MATERIAL
9. SEE SHEET A980 DETAIL 14 FOR INTERIOR WOOD SIDING ATTACHMENT/LAYOUT.
10. PAINT PLYWOOD AND BASE P-7
11. SEE SHEET A980 DETAIL 17 FOR CORNER TRANSITIONS

GENERAL FINISH NOTES

A. SEE SPECIFICATIONS FOR ACCEPTABLE EQUAL MANUFACTURERS AND PRODUCTS. SEE SPECIFICATIONS FOR SUBSTITUTION PROCEDURES WHICH REQUIRE WRITTEN APPROVAL FROM ARCHITECT.
B. RESILIENT WALL BASE SHALL BE ROLL GOODS IN THE SPECIFIED HEIGHT AND PROFILE.
C. THIS SHEET TO BE USED IN CONJUNCTION WITH THE FINISH SCHEDULE, FURNISHINGS MANUAL, AND PROJECT MANUAL.
D. FOR ALL PRODUCTS INSTALLED, NOTE INDUSTRY STANDARDS AND MANUFACTURER SPECIFICATIONS FOR INSTALLATION.
E. DO NOT PAINT ANY FACTORY FINISHED ITEMS.
F. MISCELLANEOUS METAL, I.E. RETURN AND AIR SUPPLY GRILLES,EXPANSION JOINTS, ETC. SHALL BE PAINTED TO MATCH THE ADJACENT WALL SURFACE.
G. ALL INTERIOR FINISHES SHALL MEET CLASS A FLAME SPREAD RATING OF25 OR LESS AND SHALL HAVE A SMOKE FOR WD-1: PER TABLE 803.13, NOTE .A CLASS C INTERIOR FINISH MATERIALS SHALL BE PERMITTED FOR WAINSCOTTING OR PANELING OF NOT MORE THAN 1,000 SQ. FT. OF APPLIED SURFACE AREA WHERE APPLIED DIRECTLY TO CONCUMBUSTIBLE BASE AND FIREBLOCKED AS REQUIRED BY SECTION 803.15.1
H. DEVELOPMENT OF 250 OR LESS.
I. ALL FLOOR REDUCER / THRESHOLDS SHALL BE LOCATED AT THE CENTER LINE OF DOOR WHEN IN THE CLOSED POSITION AND MEET ACCESSIBILITY REQUIREMENTS.
J. ALL INTERIOR FLOORING SHALL MEET CLASS I AND CLASS II.
K. CAULK ALL DOORS, FRAMES AND MILLWORK. COLOR TO MATCH ADJACENT SURFACE.
L. ALL SURFACES TO BE PAINTED SHALL RECEIVE TWO COATS. PREP SURFACE PER PAINT MANUFACTURER'S RECOMMENDATIONS. ALL METAL TRIM AND SASH SHALL RECEIVE TWO COATS OF PAINT OVER MANUFACTURER RECOMMENDED PRIMER COAT. ALL APPLICATIONS SHALL USE MANUFACTURER RECOMMENDED EXTENDER AGENTS IN ORDER TO REDUCE BRUSH MARKS.
M. ALL COLORS SHALL BE AS PER THE FINISH SCHEDULE UNLESS WRITTEN APPROVAL FROM THE ARCHITECT / DESIGNER.
N. THE WORD "CLEAR" INDICATES CRITICAL DIMENSIONS FOR ACCESSIBILITY EQUIPMENT OR FUNCTIONAL CLEARANCES FROM FACE OF FINISH TO FACE OF FINISH.
O. THRESHOLDS AT DOORWAYS AND TRANSITION STRIPS SHALL NOT EXCEED 1/2" IN HEIGHT. RAISED THRESHOLDS AND FLOOR LEVEL CHANGES AT ACCESSIBLE DOORWAYS SHALL BE BEVELED WITH A SLOPE NO GREATER THAN 1:2.
P. FRAME OF DOOR LITE SHALL BE PAINTED TO MATCH ADJACENT DOOR FINISH.
Q. GROUT JOINT FROM FLOOR TILE TO WALL TILE TO ALIGN WHERE POSSIBLE.

FINISH LEGEND

- C-1/C-2
- CPT-1
- CPT-2
- CPT-3
- EPY-1
- FT-1
- LVT-1
- LVT-2
- RAF-1
- RAF-2
- SSM-3
- SV-1
- TRANSITION OF FLOORING MATERIAL SEE DETAIL 10/A980
- FINISH — FINISH TAG (SEE FINISH SCHEDULE FOR ALL FINISH LOCATIONS)
- FINISH — LOCATION OF ACCENT WALL FINISH
- DIRECTION OF FLOORING PATTERN

IDENTIFICATION STAMP
DIV. OF THE STATE ARCHITECT
APP: 02-118630 INC:
REVIEWED FOR
SS ☐ FLS ☐ ACS ☑
DATE: 04/13/2021

OFFICE OF THE STATE FIRE MARSHAL
APPROVED FIRE AND PANIC ONLY
Approval of this plan does not authorize or approve any omission or deviation from applicable regulations. Final approval is subject to field inspection. One set of approved plans shall be available on the project site at all times.
PERMIT NO. 20-N-2332-CP
REVIEWED BY: LEO CATAYLO, OSFM
DATE: 4 / /2021

DGS GENERAL SERVICES
Department of General Services
State of California
Real Estate Services Division
Project Management & Development Branch
707 Third Street, Suite 4-105
West Sacramento, California 95605

NICHOLS MELBURG & ROSSETTO ARCHITECTS + ENGINEERS
300 Knollcrest Drive
Redding, CA. 96002
(530) 222-3300 (530) 222-3538 FAX
http://www.nmrdesign.com

Copyright © 2020
All ideas, designs, arrangements and plans indicated or represented by this drawing are owned by, and the property of, NICHOLS, MELBURG and ROSSETTO and were created, evolved and developed for use on, and in conjunction with, the specified project. None of such ideas, designs, arrangements or plans shall be used by, or disclosed to any person, firm or corporation for any purpose whatsoever without the written permission of NICHOLS, MELBURG and ROSSETTO.

LICENSE STAMPS

LICENSED ARCHITECT KYLE MATTHEW [illegible] C-21504 REN 10/31/21 STATE OF CALIFORNIA

CONSULTANT

DRAWING STATUS
CONSTRUCTION DOCUMENTS

ISSUE

No.	Date	Description
1	10/20/2020	INITIAL PLAN REVIEW
2	01/22/2021	AGENCY RESUBMITTAL
3	03/22/2021	AGENCY RESUBMITTAL

If drawing is not 30" x 42" it is a reduced print

PROJECT
RESIDENTIAL CENTER, UKIAH: REPLACEMENT OF EXISTING RESIDENTIAL CENTER
440 EAST HILL ROAD
WILLITS, CALIFORNIA 95490
MENDOCINO COUNTY
CALIFORNIA CONSERVATION CORP

Supervisor	Designed	Drawn
		Author

DSA Application No.
02-118630

SHEET TITLE
FINISH FLOOR PLAN - MULTI-PURPOSE BUILDING

DGS Project Number: 00000000001826
NMR Project Number: 18-6456

Reference North
Sheet Scale: As indicated
Sheet Number: ID204

ISSUE DATE
July 9, 2021

Plot Date: 3/19/2021 1:46:15 PM
File Name: BIM 360://CCC Willits Residential Center/A_CCC-WRC-COMMON.rvt

IDENTIFICATION STAMP
DIV. OF THE STATE ARCHITECT
APP: 02-118630 INC:
REVIEWED FOR
SS ☐ FLS ☐ ACS ☑
DATE: 04/13/2021

OFFICE OF THE STATE FIRE MARSHAL
APPROVED FIRE AND PANIC ONLY
Approval of this plan does not authorize or approve any omission or deviation from applicable regulations. Final approval is subject to field inspection. One set of approved plans shall be available on the project site at all times.
PERMIT NO.: 20-N-2332-CP
REVIEWED BY: LITO CATAYLO, OSFM
DATE: 3/ 1 /2021

GENERAL SERVICES
Department of General Services
State of California
Real Estate Services Division
Project Management & Development Branch
707 Third Street, Suite 4-105
West Sacramento, California 95605

NICHOLS MELBURG & ROSSETTO
ARCHITECTS + ENGINEERS
300 Knollcrest Drive
Redding, CA. 96002
(530) 222-3300 (530) 222-3538 FAX
http://www.nmrdesign.com

Copyright © 2020
All ideas, designs, arrangements and plans indicated or represented by this drawing are owned by, and the property of, NICHOLS, MELBURG and ROSSETTO and were created, evolved and developed for use on, and in conjunction with, the specified project. None of such ideas, designs, arrangements or plans shall be used by, or disclosed to any person, firm or corporation for any purpose whatsoever without the written permission of NICHOLS, MELBURG and ROSSETTO.

LICENSE STAMPS
LICENSED ARCHITECT KYLE MATTI C-27504 REN. 10/31/21 STATE OF CALIFORNIA

CONSULTANT

ARCHITECT	ASSOCIATE ARCHITECT	LANDSCAPE ARCHITECT	STRUCTURAL ENGINEER	CIVIL ENGINEER	MECHANICAL ENGINEER	ELECTRICAL ENGINEER	FOOD SERVICE
NICHOLS, MELBURG & ROSSETTO 300 Knollcrest Drive Redding, CA 96002 (530) 222-3300 PHONE (530) 222-3538 FAX	LIONAKIS 1919 Nineteenth Street Sacramento, CA 95811 (916) 558-1900 PHONE (916) 558-1919 FAX	MICHAEL LANDER ASLA 20270 Lupine Drive Redding, CA 96002 (530) 223-2488 PHONE	LIONAKIS 1919 Nineteenth Street Sacramento, CA 95811 (916) 558-1900 PHONE (916) 558-1919 FAX	BKF ENGINEERING 200 Fourth Street, Suite 300 Santa Rosa, CA 95401 (707) 583-8530 PHONE (707) 583-8539 FAX	CAPITAL ENGINEERING CONSULTANTS, INC. 11020 Sun Center Drive, Suite 100 Rancho Cordova, CA 95670 (916) 851-3500 PHONE	TK1SC 15231 Laguna Canyon Road, Suite 100 Irvine, CA 92618 (949) 751-5800 PHONE (949) 751-5811 FAX	THE MARSHALL ASSOCIATES 240 3rd Street, Suite 2-B Oakland, CA 94607 (415) 677-1200 PHONE (415) 677-1210 FAX

STANDARDS

ALL CONTRACTORS PERFORMING WORK ON THIS PROJECT SHALL COMPLY WITH THE REQUIREMENTS OF 2019 CFC CHAPTER 11, 33 AND NFPA 241 FIRE-PREVENTION PROGRAM THROUGHOUT ALL PHASES OF CONSTRUCTION.

APPLICABLE STANDARDS:

ALL WORK PERFORMED & PRODUCTS FURNISHED SHALL COMPLY AS APPLICABLE WITH THE LATEST REGULATIONS OF:

- 2016 NFPA 13 AUTOMATIC SPRINKLER SYSTEMS (CALIFORNIA AMENDED)
- 2016 NFPA 14 INSTALLATION OF STANDPIPE AND HOSE SYSTEMS (CALIFORNIA AMENDED)
- NFPA 17A, STANDARD FOR WET CHEMICAL EXTINGUISHING SYSTEMS
- 2016 NFPA 20, PUMPS FOR FIRE PROTECTION
- 2016 NFPA 24, FIRE SERVICE MAINS (CALIFORNIA AMENDED)
- 2013 NFPA 25, INSPECTION, TESTING & MAINTENANCE OF WATER-BASED FIRE PROTECTION SYSTEMS (CALIFORNIA AMENDED)
- 2018 NFPA 30, FLAMMABLE AND COMBUSTIBLE LIQUIDS CODE
- 2018 NFPA 30A, MOTOR FUEL DISPENSING FACILITIES AND REPAIR GARAGES
- 2017 NFPA 58, LIQUIFIED PETROLEUM GAS CODE
- 2016 NFPA 72 NATIONAL FIRE ALARM CODE (CALIFORNIA AMENDED)
- 2016 NFPA 80, STANDARD FOR FIRE DOORS AND OTHER OPENING PROTECTIVES
- 2012 UL 305, STANDARD FOR PANIC HARDWARE
- 2003 UL 464, AUDIBLE SIGNAL APPLIANCES
- 1997 UL 2085, STANDARD FOR PROTECTED ABOVE-GROUND TANKS FOR FLAMMABLE AND COMBUSTIBLE LIQUIDS

AGENCY REVIEW

DIVISION OF THE STATE ARCHITECT (DSA) REVIEW IS LIMITED TO ACCESSIBILITY COMPLIANCE FOR THIS PROJECT. FIRE/LIFE SAFETY SHALL BE REVIEWED BY THE CALIFORNIA STATE FIRE MARSHAL (CSFM/SFM).

CALIFORNIA STATE FIRE MARSHAL AND THE DIVISION OF THE STATE ARCHITECT - ACCESSIBILITY COMPLIANCE SECTION SHALL REVIEW AND APPROVE SCOPE OF PROPOSED CHANGES PRIOR TO INSTALLATION OR IMPLEMENTATION OF WORK IN THE FIELD.

GRADING PLANS, DRAINAGE IMPROVEMENTS, ROAD AND ACCESS REQUIREMENTS AND ENVIRONMENTAL HEALTH CONSIDERATIONS SHALL COMPLY WITH ALL LOCAL ORDINANCES.

Plot Date: 3/23/2021 4:55:29 PM
File Name: BIM 360://CCC Willits Residential Center/A_CCC-WRC-COMMON.rvt

DEFERRED SUBMITTALS

ALL DEFERRED SUBMITTALS SHALL FIRST BE SUBMITTED TO THE REGISTERED DESIGN PROFESSIONAL WHO SHALL REVIEW THEM AND FORWARD THEM TO THE APPROPRIATE AGENCY, AS NOTED BELOW IN PARENTHESIS, WITH A NOTATION INDICATING THAT THE DEFERRED SUBMITTAL DOCUMENTS HAVE BEEN REVIEWED AND FOUND TO BE IN GENERAL CONFORMANCE WITH THE DESIGN OF THE BUILDING. THE DEFERRED SUBMITTAL ITEMS SHALL NOT BE INSTALLED UNTIL THE DEFERRED SUBMITTAL DOCUMENTS HAVE BEEN APPROVED BY THE BUILDING OFFICIAL. CBC 107.3.4.2

- FIRE SUPPRESSION SYSTEM (DEFERRED FIRE PROTECTION APPROVAL)
- KITCHEN HOOD FIRE SUPPRESSION SYSTEM (DEFERRED FIRE PROTECTION APPROVAL)
- HAZMAT STORAGE STRUCTURE DRY CHEMICAL FIRE SUPPRESSION SYSTEM (DEFERRED FIRE PROTECTION APPROVAL)

CONTRACTOR SHALL OBTAIN APPROVAL OF FIRE SPRINKLER AND FIRE ALARM SYSTEMS FROM THE OFFICE OF THE STATE FIRE MARSHAL PRIOR TO SUBMISSION OF SUBMITTAL TO THE DESIGN ARCHITECT. SEND SUBMITTAL TO:

OFFICE OF THE STATE FIRE MARSHAL
FIRE & LIFE SAFETY DIVISION
2251 HARVARD STREET, SUITE 130
SACRAMENTO, CA 95815
(916) 568-2957

SUBMITTAL DOCUMENTS SHALL INCLUDE THE FOLLOWING INFORMATION:
PROJECT NAME: RESIDENTIAL CENTER, UKIAH: REPLACEMENT OF EXISTING RESIDENTIAL CENTER
PROJECT NUMBER: 000000000001826

CALIFORNIA STATE FIRE MARSHAL (CSFM) FILE #: SEE LIST ON THIS SHEET
DEFERRED APPROVALS (CSFM):

1 - AUTOMATIC FIRE SPRINKLER SYSTEM
2 - KITCHEN HOOD AND DUCT FIRE SUPPRESSION SYSTEM
3 - FIRE ALARM SYSTEM FABRICATION (SHOP DRAWINGS)

SUBMITTALS SHALL INCLUDED APPLICABLE DRAWINGS, DETAILS, NOTES, ELEMENTS, PRODUCT INFORMATION, ETC. SHOP DRAWINGS SHALL BE SIGNED & SEALED BY THE LICENSED C-10 OR C-16 CONTRACTOR/INSTALLER FOR FIRE ALARM & FIRE SUPPRESSION SYSTEMS.

VICINITY MAP

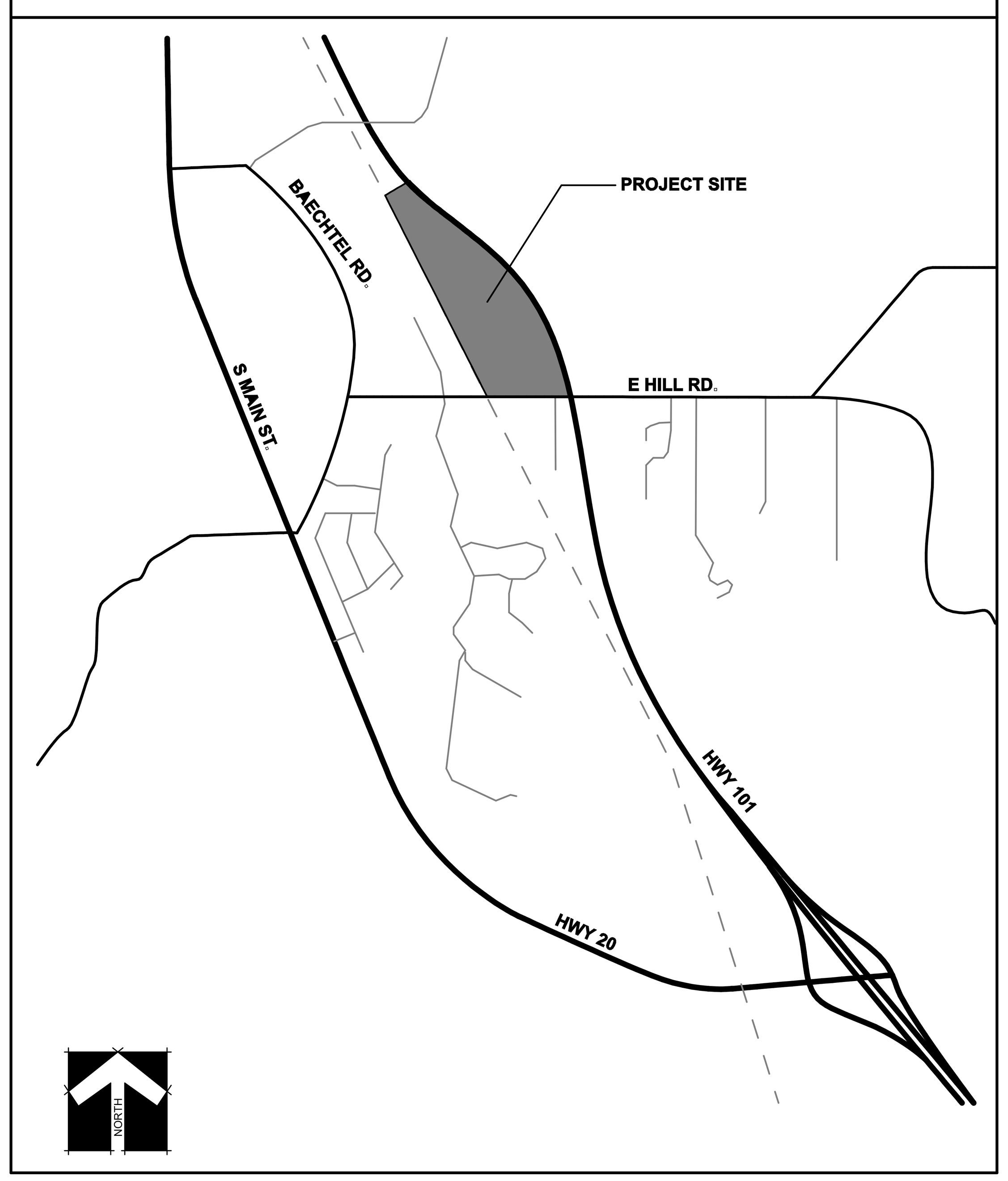

CODES

APPLICABLE CODES:
ALL WORK PERFORMED & PRODUCTS FURNISHED SHALL COMPLY AS APPLICABLE WITH THE LATEST REGULATIONS OF:

- 2019 CALIFORNIA BUILDING STANDARDS ADMINISTRATIVE CODE, PART 1, TITLE 24 C.C.R.
- 2019 CALIFORNIA BUILDING CODE (CBC), PART 2, TITLE 24 C.C.R.
- 2019 CALIFORNIA ELECTRICAL CODE (CEC), PART 3, TITLE 24 C.C.R.
- 2019 CALIFORNIA MECHANICAL CODE (CMC), PART 4, TITLE 24 C.C.R.
- 2019 CALIFORNIA PLUMBING CODE (CPC), PART 5, TITLE 24 C.C.R.
- 2019 CALIFORNIA ENERGY CODE, PART 6, TITLE 24 C.C.R.
- 2019 CALIFORNIA FIRE CODE, PART 9, TITLE 24 C.C.R.
- 2019 CALIFORNIA EXISTING BUILDING CODE, PART 10, TITLE 24 C.C.R.
- 2019 CALIFORNIA GREEN BUILDING STANDARDS CODE, PART 11, TITLE 24 C.C.R.
- 2019 CALIFORNIA REFERENCED STANDARDS CODE, PART 12, TITLE 24 C.C.R.
- TITLE 19 CALIFORNIA CODE OF REGULATIONS - PUBLIC SAFETY, DIVISION 1 STATE FIRE MARSHAL
- ASME BPVC (BOILER AND PRESSURE VESSEL CODE) SECTION VIII, DIVISION 1
- 2019 CALIFORNIA CODE OF REGULATIONS TITLE 8, CHAPTER 4, SUBCHAPTER 1 (UNIFIED PRESSURE VESSEL SAFETY ORDERS)

DGS# 1826
CSFM# SEE BELOW

ADMINISTRATION BUILDING & SITE - 20-N-2332-CP
COMET BUILDING - 21-N-0197-CP
EDUCATION BUILDING - 21-N-0198-CP
MENS HOUSING 1 - 21-N-0199-CP
MENS HOUSING 2 - 21-N-0200-CP
MENS HOUSING 3 - 21-N-0201-CP
WOMENS HOUSING 4 - 21-N-0202-CP
WOMENS HOUSING 5 - 21-N-0203-CP
WOMENS HOUSING 6 - 21-N-0204-CP
MULTI-PURPOSE BUILDING - 21-N-0205-CP
RECREATION BUILDING - 21-N-0206-CP
WAREHOUSE BUILDING - 21-N-0207-CP

NOTE: SEE SHEETS G100 & G101 FOR CLARIFICATION OF WHICH BUILDING EACH APPLICATION NUMBER PERTAINS TO

PROJECT NARRATIVE

THE PROJECT WILL CONSTRUCT A NEW CCC RESIDENTIAL CENTER IN WILLITS, CA THAT WILL CONSIST OF 66,728 TOTAL SQUARE FEET (SF). THIS RESIDENTIAL CENTER WILL INCLUDE TWELVE BUILDINGS CONSISTING OF AN ADMINISTRATION BUILDING, SEVEN DORMITORIES, AN EDUCATION BUILDING, A RECREATION BUILDING, A MULTI-PURPOSE WITH KITCHEN AND DINING ROOM WAREHOUSE WITH WORK AREA AND A HAZARDOUS MATERIALS STORAGE STRUCTURE. THE SITE WILL INCLUDE ASPHALT PAVED SURFACES FOR DRIVEWAYS AND PARKING AND CONCRETE PAVING FOR SERVICE AND STAGING AREAS AND WALKWAYS. THE FACILITY IS TO BE DESIGNED BASED ON THE PROTOTYPE AND CCC'S RESIDENTIAL NEEDS TO HOUSE 120 PERMANENT CORPS MEMBERS. THE FACILITY IS INTENDED TO BE DESIGNED TO ZERO NET ENERGY (ZNE) PER THE GOVERNOR'S EXECUTIVE ORDER B-18-12 AND ACHIEVE AT MINIMUM A LEADERSHIP IN ENERGY AND ENVIRONMENTAL DESIGN (LEED) SILVER CERTIFICATION.

PROJECT DATA

ASSESSOR'S PARCEL NUMBER: 007-100-28 & 007-180-18

ZONING: HEAVY INDUSTRIAL & INDUSTRIAL PARK

PROJECT STREET ADDRESS: 440 EAST HILL ROAD, WILLITS, CA 95490

PARCEL AREA: 26.7 ACRES

TOTAL BUILDING CONDITIONED FLOOR AREA: 66,728 S.F.

- ADMIN. 3,529 SQ. FT.
- COMET 3,233 SQ. FT.
- MEN'S HOUSING (3) AT 3,005 SQ. FT EACH
- WOMEN'S HOUSING (3) AT 3,005 SQ. FT. EACH
- EDUCATION 6,155 SQ. FT.
- MULTIPURPOSE 16,244 SQ. FT.
- RECREATION 5,834 SQ. FT.
- WAREHOUSE 13,703 SQ. FT.

REQUIRED MINIMUM SETBACKS: FRONT AND REAR – 20 FEET; SIDE YARD – 10 FEET; STREET RIGHT OF WAY AT EAST HILL ROAD – 30 FEET

WILDLAND URBAN INTERFACE: SITE IS LOCATED WITHIN A LOCAL RESPONSIBILITY AREA (LITTLE LAKE FIRE PROTECTION DISTRICT) AND IS DESIGNATED A MODERATE RISK (CBC CHAPTER 7A IS NOT APPLICABLE)

DRAWING STATUS
CONSTRUCTION DOCUMENTS

ISSUE

No.	Date	Description
1	10/20/2020	INITIAL PLAN REVIEW
2	01/22/2021	AGENCY RESUBMITTAL
3	03/22/2021	AGENCY RESUBMITTAL

If drawing is not 30" x 42" it is a reduced print

PROJECT
RESIDENTIAL CENTER, UKIAH: REPLACEMENT OF EXISTING RESIDENTIAL CENTER
440 EAST HILL ROAD
WILLITS, CALIFORNIA 95490
MENDOCINO COUNTY
CALIFORNIA CONSERVATION CORP

Supervisor	Designed	Drawn
KJM	DMH	AMP

DSA Application No.
02-118630

SHEET TITLE
COVER SHEET
VOLUME II

DGS Project Number: 000000000001826
NMR Project Number: 18-6456

Reference North: NORTH
Sheet Scale
Sheet Number: G001

ISSUE DATE
July 9, 2021

SHEET INDEX

VOLUME I

GENERAL

G001	COVER SHEET VOLUME I
G002	SHEET INDEX
G003	GENERAL NOTES AND ABBREVIATIONS
G010	CALGREEN CHECKLIST
G011	CALGREEN CHECKLIST
G012	CALGREEN CHECKLIST
G100	SITE CODE ANALYSIS & ACCESSIBILITY PLAN - SOUTH
G101	SITE CODE ANALYSIS & ACCESSIBILITY PLAN - NORTH
G110	LIFE SAFETY PLAN - ADMIN & WAREHOUSE BUILDINGS
G111	LIFE SAFETY PLAN - COMET & HOUSING BUILDINGS
G112	LIFE SAFETY PLAN - EDUCATION & RECREATION BUILDINGS
G113	LIFE SAFETY PLAN - MULTI-PURPOSE BUILDING
G120	CEILING, ROOF, & FLOOR ASSEMBLIES
G121	WALL ASSEMBLIES
G130	ASSEMBLY PENETRATIONS
G210	ACCESSIBILITY DETAILS - SITE AND PARKING
G212	ACCESSIBILITY DETAILS
G213	ACCESSIBILITY DETAILS
G300	SIGNAGE PLANS - ADMIN & WAREHOUSE BUILDINGS
G301	SIGNAGE PLANS - COMET, HOUSING, EDUCATION & RECREATION BLDGS
G302	SIGNAGE PLAN - MULTI-PURPOSE BUILDINGS
G400	WETLANDS PROTECTION SITE PLAN

CIVIL

C0.01	NOTES, LEGEND AND ABBREVIATIONS
C0.02	KEY MAP
C1.01	DEMOLITION PLAN (NORTH)
C1.02	DEMOLITION PLAN (SOUTH)
C2.00	PLAN & PROFILE EAST HILL ROAD
C2.01	PLAN & PROFILE ROAD "A"
C2.02	PLAN & PROFILE ROAD "A"
C2.03	PLAN & PROFILE ROAD "B"
C2.04	PLAN & PROFILE ROAD "B"
C2.05	PLAN & PROFILE ROAD "C"
C2.06	PLAN & PROFILE ROAD "C"
C2.07	PLAN & PROFILE BRIDGE ROAD
C2.08	CROSS SECTIONS ROAD "A"
C2.09	CROSS SECTIONS ROAD "B"
C2.10	CROSS SECTIONS ROAD "C"
C2.11	CROSS SECTIONS BRIDGE ROAD
C3.01	GRADING PLAN HOUSING AREA
C3.02	GRADING PLAN RECREATION AREA
C3.03	GRADING PLAN ADMIN AND PARKING
C3.04	GRADING PLAN WAREHOUSE, STORAGE AND PARKING AREA
C3.05	GRADING PLAN CREW STAGING AREA
C3.06	GRADING PLAN SOLAR AREA AND EXERCISE TRAIL
C4.01	UTILITY PLAN HOUSING AREA
C4.02	UTILITY PLAN RECREATION AREA
C4.03	UTILITY PLAN ADMIN AND PARKING
C4.04	UTILITY PLAN WAREHOUSE, STORAGE AND PARKING AREA
C4.05	UTILITY PLAN CREW STAGING AREA
C4.06	UTILITY PLAN SOLAR AREA AND EXERCISE TRAIL
C4.07	UTILITY PLAN STORMDRAIN PROFILES
C4.08	UTILITY PLAN SEWER LIFT STATION
C5.01	STRIPING PLAN RECREATION AREA
C5.02	STRIPING PLAN ADMIN AND PARKING
C5.03	STRIPING PLAN WAREHOUSE, STORAGE AND PARKING AREA
C6.01	CIVIL CONSTRUCTION DETAILS & SECTIONS
C6.02	CIVIL CONSTRUCTION DETAILS
C6.03	STANDARD DETAILS
C6.04	STANDARD DETAILS
C7.01	EROSION & SEDIMENT CONTROL PLAN (NORTH)
C7.02	EROSION & SEDIMENT CONTROL PLAN (SOUTH)

LANDSCAPE

L1	PLANTING SCHEDULE
L2	PLANTING PLAN
L3	PLANTING PLAN
L4	PLANTING PLAN
L5	IRRIGATION SCHEDULE
L6	IRRIGATION PLAN
L7	IRRIGATION PLAN
L8	IRRIGATION PLAN
L9	IRRIGATION DETAILS
L10	MITIGATION WETLAND PLANTING PLAN

ARCHITECTURAL SITE

A010	OVERALL SITE PLAN
A020	SITE PLAN - SOUTH
A021	SITE PLAN - NORTH
A030	ENLARGED SITE PLAN - SOUTHEAST
A031	ENLARGED SITE PLAN - SOUTHWEST
A032	ENLARGED SITE PLAN - EAST
A033	ENLARGED SITE PLAN - WEST
A034	ENLARGED SITE PLAN - NORTH
A035	ENLARGED SITE PLAN - PV ARRAY
A050	PARTIAL SITE PLANS
A051	PARTIAL SITE PLANS
A060	SITE DETAILS
A061	SITE DETAILS
A062	SITE DETAILS
A063	SITE DETAILS
A064	SITE DETAILS

ARCHITECTURAL - ADMINISTRATION BUILDING

A201A	ADMINISTRATION FLOOR PLAN, DIMENSION PLAN
A221A	ADMINISTRATION ENLARGED FLOOR PLANS
A240A	ADMINISTRATION ROOF PLAN, REFLECTED CEILING PLAN
A300A	ADMINISTRATION EXTERIOR ELEVATIONS
A400A	ADMINISTRATION BUILDING SECTIONS
A401A	ADMINISTRATION BUILDING SECTIONS
A402A	ADMINISTRATION BUILDING SECTIONS
A403A	ADMINISTRATION BUILDING SECTIONS
A500A	ADMINISTRATION INTERIOR ELEVATIONS

ARCHITECTURAL - COMET BUILDING

A201C	COMET FLOOR PLAN, DIMENSION PLAN, ROOF PLAN, RCP
A220C	ENLARGED FLOOR PLAN
A300C	COMET EXTERIOR ELEVATIONS
A400C	COMET BUILDING SECTIONS
A401C	COMET BUILDING SECTIONS
A500C	COMET INTERIOR ELEVATIONS
A501C	COMET INTERIOR ELEVATIONS

ARCHITECTURAL - EDUCATION BUILDING

A201E	EDUCATION FLOOR PLAN, DIMENSION PLAN & ENLARGED PLANS
A211E	EDUCATION ROOF PLAN & REFLECTED CEILING PLAN
A300E	EDUCATION EXTERIOR ELEVATIONS
A400E	EDUCATION BUILDING SECTION
A401E	EDUCATION BUILDING SECTION
A402E	EDUCATION BUILIDING SECTION
A500E	EDUCATION INTERIOR ELEVATIONS

ARCHITECTURAL - HOUSING MEN (BLDG'S 1,2,3)

A201HM	MEN'S HOUSING FLOOR PLAN, DIMENSION PLAN, ROOF PLAN, RCP
A220HM	MEN'S HOUSING ENLARGED FLOOR PLAN
A300HM	MEN'S HOUSING EXTERIOR ELEVATIONS
A400HM	MEN'S HOUSING BUILDING SECTIONS
A401HM	MEN'S HOUSING BUILDING SECTIONS
A500HM	MEN'S HOUSING INTERIOR ELEVATIONS

ARCHITECTURAL-HOUSING WOMEN (BLGS 4,5,6)

A201HW	WOMEN'S HOUSING FLOOR PLAN, DIMENSION PLAN, ROOF PLAN, RCP
A220HW	WOMEN'S HOUSING ENLARGED FLOOR PLAN
A300HW	WOMEN'S HOUSING EXTERIOR ELEVATIONS
A400HW	WOMEN'S HOUSING BUILDING SECTIONS
A401HW	WOMEN'S HOUSING BUILDING SECTIONS
A500HW	WOMEN'S HOUSING INTERIOR ELEVATIONS

ARCHITECTURAL MULTI-PURPOSE BUILDING

A201M	MULTI-PURPOSE FLOOR PLAN
A210M	MULTI-PURPOSE DIMENSION PLAN
A220M	MULTI-PURPOSE ENLARGED PLAN
A230M	MULTI-PURPOSE BASKETBALL COURT STRIPING PLAN
A240M	MULTI-PURPOSE ROOF PLAN
A250M	MULTI-PURPOSE REFLECTED CEILING PLAN
A300M	MULTI-PURPOSE EXTERIOR ELEVATIONS
A301M	MULTI-PURPOSE EXTERIOR ELEVATIONS
A401M	MULTI-PURPOSE BUILDING SECTION
A402M	MULTI-PURPOSE BUILDING SECTION
A403M	MULTI-PURPOSE BUILDING SECTION
A404M	MULTI-PURPOSE BUILDING SECTION
A405M	MULTI-PURPOSE BUILDING SECTION
A406M	MULTI-PURPOSE BUILDING SECTION
A407M	MULTI-PURPOSE BUILDING SECTION
A408M	MULTI-PURPOSE BUILDING SECTION
A409M	MULTI-PURPOSE BUILDING SECTION
A410M	MULTI-PURPOSE BUILDING SECTION
A500M	MULTI-PURPOSE INTERIOR ELEVATIONS
A501M	MULTI-PURPOSE INTERIOR ELEVATIONS
A502M	MULTI-PURPOSE INTERIOR ELEVATIONS
A503M	MULTI-PURPOSE INTERIOR ELEVATIONS

ARCHITECTURAL - RECREATION BUILDING

A201R	RECREATION BLDG. FLOOR PLAN & DIMENSION PLAN & ENLARGED PLANS
A211R	RECREATION BLDG. ROOF PLAN & REFLECTED CEILING PLAN
A300R	RECREATION BLDG. EXTERIOR ELEVATIONS
A400R	RECREATION BLDG. BUILDING SECTIONS
A401R	RECREATION BLDG. BUILDING SECTIONS
A500R	RECREATION BLDG. INTERIOR ELEVATION
A501R	RECREATION BLDG. INTERIOR ELEVATION

ARCHITECTURAL - WAREHOUSE BUILDING

A201W	WAREHOUSE BLDG. FLOOR PLAN
A211W	WAREHOUSE BLDG. DIMENSION PLAN
A220W	WAREHOUSE BLDG ENLARGED FLOOR PLAN
A240W	WAREHOUSE BLDG. ROOF PLAN
A251W	WAREHOUSE BLDG. REFLECTED CEILING PLAN
A300W	WAREHOUSE BLDG. EXTERIOR ELEVATIONS
A301W	WAREHOUSE BLDG. EXTERIOR ELEVATIONS
A401W	WAREHOUSE BLDG. SECTIONS
A402W	WAREHOUSE BLDG. SECTIONS
A403W	WAREHOUSE BLDG. SECTIONS
A404W	WAREHOUSE BLDG. SECTIONS
A405W	WAREHOUSE BLDG. SECTIONS
A406W	WAREHOUSE BLDG. SECTIONS
A407W	WAREHOUSE BLDG. SECTIONS
A501W	WAREHOUSE BLDG. INTERIOR ELEVATIONS
A502W	WAREHOUSE BLDG. INTERIOR ELEVATIONS

ARCHITECTURAL - COMMON SHEETS

A710	DOOR SCHEDULE
A711	DOOR & FRAME TYPES
A712	DOOR & FRAME DETAILS
A713	DOOR & FRAME DETAILS
A720	WINDOW & LOUVER TYPES
A721	WINDOW & LOUVER DETAILS
A722	WINDOW & LOUVER DETAILS
A800	EXTERIOR DETAILS - BUILDING ENVELOPE
A810	EXTERIOR DETAILS - ROOFING
A811	EXTERIOR DETAILS - ROOFING
A820	EXTERIOR DETAILS - MISCELLANEOUS
A900	FINISH SCHEDULE
A901	FINISH SCHEDULE
A902	FINISH SCHEDULE
A930	INTERIOR DETAILS - CEILINGS
A931	INTERIOR DETAILS - CEILINGS
A940	INTERIOR DETAILS - CASEWORK DETAILS
A960	INTERIOR DETAILS - MISCELLANEOUS
A961	INTERIOR DETAILS - MISCELLANEOUS
A965	INTERIOR DETAILS - SIGNAGE DETAILS
A980	WALL PROTECTION

INTERIOR DESIGN

ID201	FINISH FLOOR PLAN - ADMIN & WAREHOUSE BUILDING
ID202	FINISH FLOOR PLAN - COMET & HOUSING BUILDINGS
ID203	FINISH FLOOR PLAN - EDUCATION & RECREATION BUILDING
ID204	FINISH FLOOR PLAN - MULTI-PURPOSE BUILDING

VOLUME II

GENERAL

G001	COVER SHEET VOLUME II
G002	SHEET INDEX

STRUCTURAL

S001	GENERAL NOTES
S011	TYPICAL NOTES
S012	TYPICAL NOTES
S013	TYPICAL NOTES
S201A	ADMINISTRATION FOUNDATION PLAN
S202A	ADMINISTRATION ROOF FRAMING PLAN
S211A	ADMINISTRATION 3D VIEWS
S401A	ADMINISTRATION STRUCTURAL BUILDING SECTIONS
S402A	ADMINISTRATION STRUCTURAL BUILDING SECTIONS
S201C	COMET FOUNDATION PLAN
S202C	COMET ROOF FRAMING PLAN
S211C	COMET 3D VIEWS
S401C	COMET STRUCTURAL BUILDING SECTIONS
S201E	EDUCATION FOUNDATION PLAN
S202E	EDUCATION ROOF FRAMING PLAN
S211E	EDUCATION 3D VIEWS
S401E	EDUCATION STRUCTURAL BUILDING SECTIONS
S402E	EDUCATION STRUCTURAL BUILDING SECTIONS
S201HM	MEN'S HOUSING FOUNDATION PLAN
S202HM	MEN'S HOUSING ROOF FRAMING PLAN
S211HM	MEN'S HOUSING 3D VIEWS
S401HM	MEN'S HOUSING STRUCTURAL BUILDING SECTIONS
S201HW	WOMEN'S HOUSING FOUNDATION PLAN
S202HW	WOMEN'S HOUSING ROOF FRAMING PLAN
S211HW	WOMEN'S HOUSING 3D VIEWS
S401HW	WOMEN'S HOUSING STRUCTURAL BUILDING SECTIONS
S201M	MULTI-PURPOSE FOUNDATION PLAN
S202M	MULTI-PURPOSE ROOF FRAMING PLAN
S203M	MULTI-PURPOSE ROOF COLLECTOR/STRAP/SP NAILING PLAN
S211M	MULTI-PURPOSE 3D VIEWS
S401M	MULTI-PURPOSE STRUCTURAL BUILDING SECTIONS
S402M	MULTI-PURPOSE STRUCTURAL BUILDING SECTIONS
S403M	MULTI-PURPOSE STRUCTURAL BUILDING SECTIONS
S404M	MULTI-PURPOSE STRUCTURAL BUILDING SECTIONS
S201R	RECREATION FOUNDATION PLAN
S202R	RECREATION ROOF FRAMING PLAN
S211R	RECREATION 3D VIEWS
S401R	RECREATION STRUCTURAL BUILDING SECTIONS
S402R	RECREATION STRUCTURAL BUILDING SECTIONS
S201W	WAREHOUSE FOUNDATION PLAN
S202W	WAREHOUSE ROOF FRAMING PLAN
S211W	WAREHOUSE 3D VIEWS
S401W	WAREHOUSE STRUCTURAL BUILDING SECTIONS
S402W	WAREHOUSE STRUCTURAL BUILDING SECTIONS
S531	DETAILS - TYPICAL CONCRETE
S532	DETAILS - TYPICAL CONCRETE
S551	DETAILS - STRUCTURAL STEEL
S561	DETAILS - TYPICAL WOOD FRAMING
S562	DETAILS - TYPICAL WOOD FRAMING
S563	DETAILS - TYPICAL WOOD SHEAR WALL FRAMING
S564	DETAILS - TYPICAL WOOD TRUSS FRAMING
S565	DETAILS - TYPICAL MANUFACTURED LUMBER FRAMING
S566	DETAILS - WOOD FRAMING
S567	DETAILS - WOOD FRAMING
S568	DETAILS - WOOD FRAMING
S569	DETAILS - WOOD FRAMING
S570	DETAILS - WOOD FRAMING
S571	DETAILS - WOOD FRAMING
S701	CLT AND GLB TRUSS DETAILS
S702	DETAILS
S703	DETAILS - WOOD FRAMING

MECHANICAL

M001	HVAC LEGENDS & NOTES
M002	HVAC SCHEDULES
M003	HVAC SCHEDULES
M101A	ADMINISTRATION BLDG HVAC ZONE PLAN
M201A	ADMINISTRATION BLDG HVAC FLOOR PLAN
M202A	ADMINISTRATION BLDG HVAC ROOF PLAN
M301A	ADMINISTRATION BLDG HVAC PIPING FLOOR PLAN
M401A	ADMINISTRATION BLDG TITLE 24 COMPLIANCE
M402A	ADMINISTRATION BLDG TITLE 24 COMPLIANCE
M403A	ADMINISTRATION BLDG TITLE 24 COMPLIANCE
M101C	COMET BLDG HVAC ZONE PLAN
M201C	COMET BLDG HVAC FLOOR PLAN
M202C	COMET BLDG HVAC PLENUM PLAN
M301C	COMET BLDG HVAC PIPING FLOOR PLAN
M401C	COMET BLDG TITLE 24 COMPLIANCE
M402C	COMET BLDG TITLE 24 COMPLIANCE
M403C	COMET BLDG TITLE 24 COMPLIANCE
M101E	EDUCATION BLDG HVAC ZONE PLAN
M201E	EDUCATION BLDG HVAC FLOOR PLAN
M202E	EDUCATION BLDG HVAC PLENUM PLAN
M301E	EDUCATION BLDG HVAC PIPING FLOOR PLAN
M401E	EDUCATION BLDG TITLE 24 COMPLIANCE
M402E	EDUCATION BLDG TITLE 24 COMPLIANCE
M101HM	MEN'S HOUSING HVAC ZONE PLAN
M201HM	MEN'S HOUSING HVAC FLOOR PLAN
M202HM	MEN'S HOUSING HVAC PLENUM PLAN
M301HM	MEN'S HOUSING HVAC PIPING FLOOR PLAN
M401HM	MEN'S HOUSING TITLE 24 COMPLIANCE
M402HM	MEN'S HOUSING TITLE 24 COMPLIANCE
M403HM	MEN'S HOUSING TITLE 24 COMPLIANCE
M101HW	WOMEN'S HOUSING HVAC ZONE PLAN
M201HW	WOMEN'S HOUSING HVAC FLOOR PLAN
M202HW	WOMEN'S HOUSING HVAC PLENUM PLAN
M301HW	WOMEN'S HOUSING HVAC PIPING FLOOR PLAN
M401HW	WOMEN'S HOUSING TITLE 24 HOUSING
M402HW	WOMEN'S HOUSING TITLE 24 HOUSING
M403HW	WOMEN'S HOUSING TITLE 24 HOUSING
M101M	MULTI-PURPOSE BLDG HVAC ZONE PLAN
M201M	MULTI-PURPOSE BLDG HVAC FLOOR PLAN
M202M	MULTI-PURPOSE BLDG HVAC ROOF PLAN
M301M	MULTI-PURPOSE BLDG HVAC PIPING FLOOR PLAN
M302M	MULTI-PURPOSE BLDG HVAC PIPING ROOF PLAN
M401M	MULTI-PURPOSE BLDG TITLE 24 COMPLIANCE
M402M	MULTI-PURPOSE BLDG TITLE 24 COMPLIANCE
M403M	MULTI-PURPOSE BLDG TITLE 24 COMPLIANCE
M404M	MULTI-PURPOSE BLDG TITLE 24 COMPLIANCE
M101R	RECREATION BLDG HVAC ZONE PLAN
M201R	RECREATION BLDG HVAC FLOOR PLAN
M202R	RECREATION BLDG HVAC PLENUM PLAN
M301R	RECREATION BLDG HVAC PIPING FLOOR PLAN
M401R	RECREATION BLDG TITLE 24 COMPLIANCE
M402R	RECREATION BLDG TITLE 24 COMPLIANCE
M101W	WAREHOUSE BLDG HVAC ZONE PLAN
M201W	WAREHOUSE BLDG HVAC FLOOR PLAN
M202W	WAREHOUSE BLDG HVAC PLENUM PLAN
M301W	WAREHOUSE BLDG HVAC PIPING FLOOR PLAN
M401W	WAREHOUSE BLDG TITLE 24 COMPLIANCE
M402W	WAREHOUSE BLDG TITLE 24 COMPLIANCE
M400	HVAC PIPING DIAGRAMS
M500	HVAC DETAILS
M501	HVAC DETAILS
M502	HVAC DETAILS
M600	HVAC CONTROLS
M601	HVAC CONTROLS
M602	HVAC CONTROLS
M603	HVAC CONTROLS
M604	HVAC CONTROLS

PLUMBING

P001	PLUMBING LEGENDS & NOTES
P002	PLUMBING SCHEDULES
P003	PLUMBING FIXTURE SCHEDULE
P101	PLUMBING SITE PLAN
P201A	ADMINISTRATION BLDG PLUMBING FLOOR PLAN
P202A	ADMINISTRATION BLDG PLUMBING ROOF PLAN
P201C	COMET BLDG PLUMBING FLOOR PLAN
P201E	EDUCATION BLDG PLUMBING FLOOR PLAN
P201HM	MEN'S HOUSING PLUMBING FLOOR PLAN
P201HW	WOMEN'S HOUSING PLUMBING FLOOR PLAN
P201M	MULTI-PURPOSE BLDG PLUMBING FLOOR PLAN
P202M	MULTI-PURPOSE BLDG PLUMBING ROOF PLAN
P401M	MULTI-PURPOSE PLUMBING ENLARGED FLOOR PLAN & CALCULATION
P402M	MULTI-PURPOSE BLDG PLUMBING ENLARGED FLOOR PLAN
P201R	RECREATION BLDG PLUMBING FLOOR PLAN
P202R	RECREATION BLDG PLUMBING ROOF PLAN
P201W	WAREHOUSE BLDG PLUMBING FLOOR PLAN
P500	PLUMBING DETAILS
P501	PLUMBING DETAILS

FIRE PROTECTION

FP001	FIRE PROTECTION LEGENDS, NOTES, & DETAILS
FP201A	ADMINISTRATION BLDG FIRE PROTECTION FLOOR PLAN
FP201C	COMET BLDG FIRE PROTECTION FLOOR PLAN
FP201E	EDUCATION BLDG FIRE PROTECTION FLOOR PLAN
FP201HM	MEN'S HOUSING FIRE PROTECTION FLOOR PLAN
FP201HW	WOMEN'S HOUSING FIRE PROTECTION FLOOR PLAN
FP201M	MULTI-PURPOSE BLDG FIRE PROTECTION FLOOR PLAN
FP201R	RECREATION BLDG FIRE PROTECTION FLOOR PLAN
FP201W	WAREHOUSE BLDG FIRE PROTECTION FLOOR PLAN

VOLUME III

GENERAL

G001	COVER SHEET VOLUME III
G002	SHEET INDEX

ELECTRICAL

E001	SYMBOL LIST
E020	SITE PLAN - SOUTH
E021	SITE PLAN - NORTH
E022	SITE LIGHTING PLAN
E023	ENLARGED SITE PLANS
E024	SITE LIGHTING PHOTOMETRIC PLAN
E030	ENLARGED SITE UTILITY PLAN
E101A	ADMINISTRATION BUILDING LIGHTING PLAN
E102A	ADMINISTRATION BUILDING EMERGENCY LIGHTING PHOTOMETRIC PLAN
E201A	ADMINISTRATION BUILDING POWER AND SIGNAL PLAN
E301A	ADMINISTRATION BUILDING MECHANICAL POWER PLAN
E407A	ADMINISTRATION BUILDING PANEL SCHEDULES
E505A	TITLE 24 ADMIN BUILDING
E101C	COMET LIGHTING PLAN
E102C	COMET EMERGENCY LIGHTING PHOTOMETRIC PLAN
E201C	COMET POWER AND SIGNAL PLAN
E301C	COMET MECHANICAL POWER PLAN
E407C	COMET PANEL SCHEDULES
E505C	TITLE 24 COMET BUILDING
E101E	EDUCATION BUILDING LIGHTING PLAN
E102E	EDUCATION BUILDING EMERGENCY LIGHTING PHOTOMETRIC PLAN
E201E	EDUCATION BUILDING POWER AND SIGNAL PLAN
E301E	EDUCATION BUILDING MECHANICAL POWER PLAN
E407E	EDUCATION BUILDING PANEL SCHEDULES
E505E	TITLE 24 EDUCATION BUILDING
E101HM	MEN'S HOUSING LIGHTING PLAN
E102HM	MEN'S HOUSING EMERGENCY LIGHTING PHOTOMETRIC PLAN
E201HM	MEN'S HOUSING POWER AND SIGNAL PLAN
E301HM	MEN'S HOUSING MECHANICAL POWER PLAN
E407HM	MEN'S HOUSING PANEL SCHEDULES
E505HM	TITLE 24 MEN'S HOUSING
E101HW	WOMEN'S HOUSING LIGHTING PLAN
E102HW	WOMEN'S HOUSING EMERGENCY LIGHTING PHOTOMETRIC PLAN
E201HW	WOMEN'S HOUSING POWER AND SIGNAL PLAN
E301HW	WOMEN'S HOUSING MECHANICAL POWER PLAN
E407HW	WOMEN'S HOUSING PANEL SCHEDULES
E505HW	TITLE 24 WOMEN'S HOUSING
E101M	MULTI-PURPOSE BUILDING LIGHTING PLAN
E102M	MULTI-PURPOSE BUILDING EMERGENCY LIGHTING PHOTOMETRIC PLAN
E201M	MULTI-PURPOSE BUILDING POWER AND SIGNAL PLAN
E202M	MULTI-PURPOSE BUILDING ENLARGED KITCHEN PLAN
E301M	MULTI-PURPOSE BUILDING MECHANICAL POWER PLAN
E407M	MULTI-PURPOSE BUILDING PANEL SCHEDULES
E505M	TITLE 24 MULTI-PURPOSE BUILDING
E101R	RECREATION BUILDING LIGHTING PLAN
E102R	RECREATION BUILDING EMERGENCY LIGHTING PHOTOMETRIC PLAN
E201R	RECREATION BUILDING POWER AND SIGNAL PLAN
E301R	RECREATION BUILDING MECHANICAL POWER PLAN
E407R	RECREATION BUILDING PANEL SCHEDULES
E505R	TITLE 24 RECREATION BUILDING
E101W	WAREHOUSE BUILDING LIGHTING PLAN
E102W	WAREHOUSE BUILDING EMERGENCY LIGHTING PHOTOMETRIC PLAN
E201W	WAREHOUSE BUILDING POWER AND SIGNAL PLAN
E301W	WAREHOUSE BUILDING MECHANICAL POWER PLAN
E407W	WAREHOUSE BUILDING PANEL SCHEDULES
E505W	TITLE 24 WAREHOUSE BUILDING
E401	SINGLE LINE DIAGRAM
E402	POWER SYSTEM STUDY AND TRANSFORMER SCHEDULE
E403	GENERATOR SCHEDULE
E404	GENERATOR SPECIFICATIONS
E405	ATS SCHEDULE
E406	SPD SCHEDULE
E501	LIGHTING FIXTURE SCHEDULE
E503	DISTRIBUTED LIGHTING CONTROLS
E504	SEQUENCE OF OPERATION
E505	TITLE 24 POWER DISTRIBUTION
E506	TITLE 24 EXTERIOR LIGHTING
E601	DETAILS
E602	DETAILS
E603	DETAILS
E604	DETAILS
E605	AV DETAILS
E606	AV DETAILS
E701	TELECOM PATHWAYS AND GROUNDING
E801	PV SITE PLAN
E802	PV SINGLE LINE DIAGRAM
E803	PV EQUIPMENT
E804	PV EQUIPMENT
E805	PV EQUIPMENT
E806	PV SIGNAGE

FIRE ALARM

FA001	FIRE ALARM SYMBOL LIST
FA002	FIRE ALARM DETAILS
FA010	FIRE ALARM RISER DIAGRAM
FA011	FIRE ALARM RISER DIAGRAM
FA012	FIRE ALARM CALCULATIONS
FA201A	ADMINISTRATION BUILDING FIRE ALARM PLAN
FA201C	COMET FIRE ALARM PLAN
FA201E	EDUCATION BUILDING FIRE ALARM PLAN
FA201HM	MEN'S HOUSING FIRE ALARM PLAN
FA201HW	WOMEN'S HOUSING FIRE ALARM PLAN
FA201M	MULTI-PURPOSE BUILDING FIRE ALARM PLAN
FA201R	RECREATION BUILDING FIRE ALARM PLAN
FA201W	WAREHOUSE BUILDING FIRE ALARM PLAN

TELECOMMUNICATIONS

T020	SIGNAL SITE PLAN - SOUTH
T021	SIGNAL SITE PLAN - NORTH
T050	FACEPLATE DETAILS
T051	DETAILS
T052	TECHNOLOGY SINGLE LINE DIAGRAM
T053	CCTV SINGLE LINE DIAGRAM
T054	ACCESS SINGLE LINE DIAGRAM
T055	SECURITY CAMERA DETAILS
T056	SECURITY DOOR HARDWARE DETAILS
T057	LV DETAILS

FOOD SERVICE / LAUNDRY

FS-111	FOOD SERVICE EQUIPMENT PLAN
FS-112	FOOD SERVICE BUILDING CONDITIONS & VENTILATION PLAN
FS-113	FOOD SERVICE PLUMBING ROUGH-IN PLAN
FS-114	FOOD SERVICE ELECTRICAL ROUGH-IN PLAN
FS-211	FOOD SERVICE ELEVATIONS
FS-212	FOOD SERVICE ELEVATIONS
FS-213	FOOD SERVICE ELEVATIONS
FS-214	FOOD SERVICE MANUFACTURER DRAWING - EXHAUST HOOD
FS-215	FOOD SERVICE MANUFACTURER DRAWING - FIRE SUPPRESSION
FS-216	FOOD SERVICE MANUFACTURER DRAWING - DEMANDAIRE
FS-217	FOOD SERVICE MANUFACTURER DRAWING - UTILITY WALL
FS-218	FOOD SERVICE MANUFACTURER DRAWING - REFRIGERATION
FS-219	FOOD SERVICE MANUFACTURER DRAWING - REFRIGERATION
LS-111	LAUNDRY EQUIPMENT PLAN

IDENTIFICATION STAMP
DIV. OF THE STATE ARCHITECT
APP: 02-118630 INC:
REVIEWED FOR
SS ☐ FLS ☐ ACS ☑
DATE: 04/13/2021

OFFICE OF THE STATE FIRE MARSHAL
APPROVED FIRE AND PANIC ONLY
Approval of this plan does not authorize or approve any omission or deviation from applicable regulations. Final approval is subject to field inspection. One set of approved plans shall be available on the project site at all times.
PERMIT NO.: 20-N-2332-CP
REVIEWED BY: LITO CATAYLO, OSFM
DATE: 4/ / /2021

GENERAL SERVICES
Department of General Services
State of California
Real Estate Services Division
Project Management & Development Branch
707 Third Street, Suite 4-105
West Sacramento, California 95605

NICHOLS MELBURG & ROSSETTO
ARCHITECTS + ENGINEERS
300 Knollcrest Drive
Redding, CA. 96002
(530) 222-3300 (530) 222-3538 FAX
http://www.nmrdesign.com

Copyright © 2020
All ideas, designs, arrangements and plans indicated or represented by this drawing are owned by, and the property of, NICHOLS, MELBURG and ROSSETTO and were created, evolved and developed for use on, and in conjunction with, the specified project. None of such ideas, designs, arrangements or plans shall be used by, or disclosed to any person, firm or corporation for any purpose whatsoever without the written permission of NICHOLS, MELBURG and ROSSETTO.

LICENSE STAMPS

LICENSED ARCHITECT
KYLE MATTI
C 27504
REN. 10/31/21
STATE OF CALIFORNIA

CONSULTANT

DRAWING STATUS
CONSTRUCTION DOCUMENTS

ISSUE

No.	Date	Description
1	10/20/2020	INITIAL PLAN REVIEW
2	01/22/2021	AGENCY RESUBMITTAL
3	03/22/2021	AGENCY RESUBMITTAL

If drawing is not 30" x 42" it is a reduced print

PROJECT
RESIDENTIAL CENTER, UKIAH: REPLACEMENT OF EXISTING RESIDENTIAL CENTER
440 EAST HILL ROAD
WILLITS, CALIFORNIA 95490
MENDOCINO COUNTY
CALIFORNIA CONSERVATION CORP

Supervisor	Designed	Drawn
KJM	DMH	DMH

DSA Application No.
02-118630

SHEET TITLE
SHEET INDEX

DGS Project Number 000000000001826
NMR Project Number 18-6456

Reference North
NORTH

Sheet Scale

Sheet Number
G002

ISSUE DATE
July 9, 2021

Plot Date: 3/26/2021 12:46:51 PM
File Name: BIM 360://CCC Willits Residential Center/A_CCC-WRC-COMMON.rvt

STRUCTURAL ABBREVIATIONS LEGEND

S- 014213_N001A

SEE UNITED STATES NATIONAL CAD STANDARD FOR ANY ABBREVIATIONS NOT LISTED BELOW. SEE BUILDING CODE FOR REFERENCED DESIGN AND MATERIALS SYMBOLS, ACRONYMS & NOTATIONS.

&	AND	IR	INSIDE RADIUS
@	AT	JH	JOIST HANGER
(E)	EXISTING	JT	JOINT
'	FOOT, FEET	L	ANGLE, LONG, LENGTH
"	INCH, INCHES	LL	LIVE LOAD
#	NUMBER, POUND	LLH	LONG LEG HORIZONTAL
A/E	ARCHITECT / ENGINEER	LLV	LONG LEG VERTICAL
AB	ANCHOR BOLT	LONG	LONGITUDINAL
ABV	ABOVE	LS	LAG SCREW
ADDL	ADDITIONAL	LWC	LIGHT WEIGHT CONCRETE
AFF	ABOVE FINISHED FLOOR	MAX	MAXIMUM
AFG	ABOVE FINISHED GRADE	MB	MACHINE BOLT
AFS	ABOVE FINISHED SLAB	MC	MISCELLANEOUS CHANNEL
ALT	ALTERNATE	MCJ	MASONRY CONTROL JOINT
ALUM	ALUMINUM	MDJ	MASONRY DOWEL JOINT
APPROX	APPROXIMATE	MECH	MECHANICAL
ARCH	ARCHITECT	MEJ	MASONRY EXPANSION JOINT
ATR	ALL THREAD ROD	MFR	MANUFACTURER
AYC	ALASKAN YELLOW CEDAR	MIN	MINIMUM
BFF	BELOW FINISH FLOOR	MISC	MISCELLANEOUS
BKG	BACKING	MKJ	MASONRY KEY JOINT
BLDG	BUILDING	MRJ	MASONRY RAKE JOINT
BLKG	BLOCKING	NA	NOT APPLICABLE
BLW	BELOW	NF	NEAR FACE
BM	BEAM	NIC	NOT IN CONTRACT
BMU	BRICK MASONRY UNIT	NTS	NOT TO SCALE
BN	BOUNDARY NAIL	NWC	NORMAL WEIGHT CONCRETE
BOS	BOTTOM OF STEEL	O/	OVER
BOT	BOTTOM	OC	ON CENTER
BTWN	BETWEEN	OD	OUTSIDE DIAMETER
C	CAMBER, CHANNEL	OPH	OPPOSITE HAND
CB	CARRIAGE BOLT	OPNG	OPENING
CBC	CALIFORNIA BUILDING CODE	OPP	OPPOSITE
CFSF	COLD-FORMED STEEL FRAMING	OR	OUTSIDE RADIUS
CG	CENTER OF GRAVITY	PAF	POWER ACTUATED FASTENER
CJ	CONSTRUCTION JOINT	PCC	PRECAST CONCRETE
CJP	COMPLETE JOINT PENETRATION	PCF	POUNDS PER CUBIC FOOT
CL	CENTER LINE	PJP	PARTIAL JOINT PENETRATION
CLR	CLEAR	PL	PLATE, PROPERTY LINE
CMU	CONCRETE MASONRY UNIT	PLF	POUNDS PER LINEAR FOOT
COL	COLUMN	PREFAB	PREFABRICATE
CONC	CONCRETE	PSF	POUNDS PER SQUARE FOOT
CONN	CONNECT, CONNECTION	PSI	POUNDS PER SQUARE INCH
CONT	CONTINUE, CONTINUOUS	PTW	PRESERVATIVE TREATED WOOD
CRS	COLD ROLLED STEEL	QTY	QUANTITY
CSK	COUNTER SUNK	R	RADIUS, RISER
CTR	CENTER	REBAR	REINFORCING STEEL BAR
D	PENNY (NAIL), DEEP, DEPTH	REINF	REINFORCE, REINFORCING
DBL	DOUBLE	REQ	REQUIRE, REQUIRED
DCW	DEMAND CRITICAL WELD	RND	ROUND
DEG	DEGREE	RO	ROUGH OPENING
DEMO	DEMOLITION	RS	ROUGH SAWN
DET	DETAIL	RWD	REDWOOD
DIA	DIAMETER	S	SPACED, SPACING, SPLICE, STEP
DIAG	DIAGONAL	SAD	SEE ARCHITECTURAL DRAWINGS
DIM	DIMENSION	SCHED	SCHEDULE
DJ	DOWEL JOINT	SDST	SELF-DRILLING SELF-TAPPING
DL	DEAD LOAD	SE	STRUCTURAL ENGINEER
DO	DITTO, DO OVER	SECT	SECTION
DOUG FIR	DOUGLAS FIR	SFRS	SEISMIC FORCE RESISTING SYSTEM
DWG	DRAWING	SHTHG	SHEATHING
DWL	DOWEL	SIM	SIMILAR
EA	EACH	SJ	SHRINKAGE JOINT
EE	EACH END	SL	SNOW LOAD
EF	EACH FACE	SP	STRUCTURAL PANEL
EJ	EXPANSION JOINT	SPEC	SPECIFICATION
EL	ELEVATION	SQ	SQUARE
ELEC	ELECTRIC, ELECTRICAL	SST	STAINLESS STEEL
ELEV	ELEVATOR	STAG	STAGGERED
EMBED	EMBEDMENT	STD	STANDARD
EN	EDGE NAIL	STIF	STIFFENER
EOS	EDGE OF SLAB	STIR	STIRRUP
EQ	EQUAL, EQUALLY	STL	STEEL
ES	EACH SIDE	STRUCT	STRUCTURAL
EW	EACH WAY	SYMM	SYMMETRICAL
EXT	EXTERIOR	T	TREAD, THICKNESS
F/F	FACE TO FACE	T&B	TOP & BOTTOM
FA	FRAMING ANGLE	T&G	TONGUE & GROOVE
FB	FLAT BAR	THK	THICKNESS
FDTN	FOUNDATION	THRU	THROUGH
FIN	FINISH	TJ	TOOL JOINT
FLG	FLANGE	TN	TOE NAIL
FLR	FLOOR	TOB	TOP OF BEAM
FN	FIELD NAIL	TOC	TOP OF CURB/CONCRETE
FOC	FACE OF CONCRETE/CURB	TOF	TOP OF FRAMING/FOOTING/FLOOR
FOF	FACE OF FINISH	TOJ	TOP OF JOIST
FOM	FACE OF MASONRY	TOM	TOP OF MASONRY
FOS	FACE OF STUD	TOP	TOP OF PARAPET
FOW	FACE OF WALL	TOS	TOP OF STEEL
FRMG	FRAMING	TOSP	TOP OF STRUCTURAL PANEL
FRTW	FIRE RETARDANT TREATED WOOD	TOT	TOP OF TRUSS
FS	FAR SIDE	TOW	TOP OF WALL
FT	FEET, FOOT	TS	TUBE STEEL
FTG	FOOTING	TYP	TYPICAL
FURG	FURRING	UC	UNDERCUT
GA	GAGE	UNO	UNLESS NOTED OTHERWISE
GALV	GALVANIZED	UON	UNLESS OTHERWISE NOTED
GLB	GLUED LAMINATED BEAM	VERT	VERTICAL
GR	GRADE	VIF	VERIFY IN FIELD
H	HIGH, HEIGHT	VR	VAPOR RETARDER
HDR	HEADER	W	WIDE, WIDTH, WELD, W-SHAPE
HGR	HANGER	W/	WITH
HLDN	HOLDDOWN	W/O	WITHOUT
HORIZ	HORIZONTAL	WF	WIDE FLANGE
HS	HIGH STRENGTH	WHS	WELDED HEADED STUD
HSB	HIGH STRENGTH BOLT	WL	WIND LOAD
HSS	HOLLOW STRUCTURAL SECTION	WO	WHERE OCCURS
HT	HEIGHT	WP	WORKING POINT
ICC	INTERNATIONAL CODE COUNCIL	WT	WEIGHT, W TEE-SHAPE
ID	INSIDE DIAMETER	WTS	WELDED THREADED STUD
IJ	ISOLATION JOINT	WWR	WELDED WIRE REINFORCEMENT
INFO	INFORMATION	XS	EXTRA STRONG
INT	INTERIOR	XXS	DOUBLE EXTRA STRONG

STRUCTURAL SYMBOLS LEGEND

SN011000-004

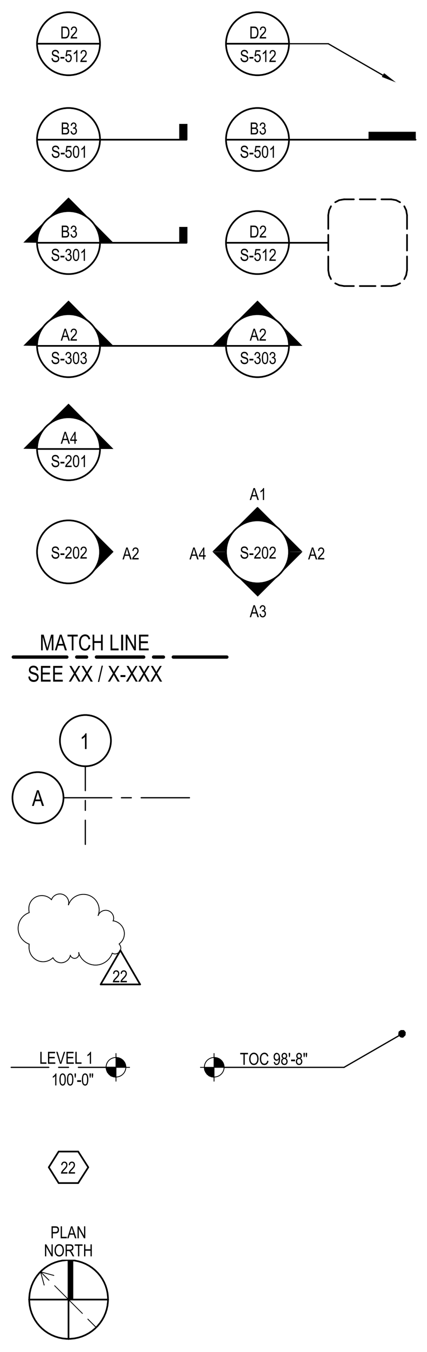

DETAIL INDICATOR - REFERENCE & DETAIL INDICATOR - ITEM

DETAIL INDICATOR - SECTION & DETAIL INDICATOR - SECTION ITEM

SECTION INDICATOR - PARTIAL BUILDING/WALL DETAIL INDICATOR - AREA

SECTION INDICATOR - BUILDING

ELEVATION INDICATOR - EXTERIOR

ELEVATION INDICATOR - INTERIOR, SINGLE & MULTIPLE VIEW

MATCH LINE INDICATOR

REFERENCE GRID WITH REFERENCE GRID LINES

REVISION INDICATOR & REVISION CLOUD

ELEVATION INDICATOR - LEVEL & SPOT

KEYNOTE INDICATOR

PLAN NORTH & TRUE NORTH INDICATOR

MATERIAL SYMBOL LEGEND

S- 011000_N006A
170125. Q2

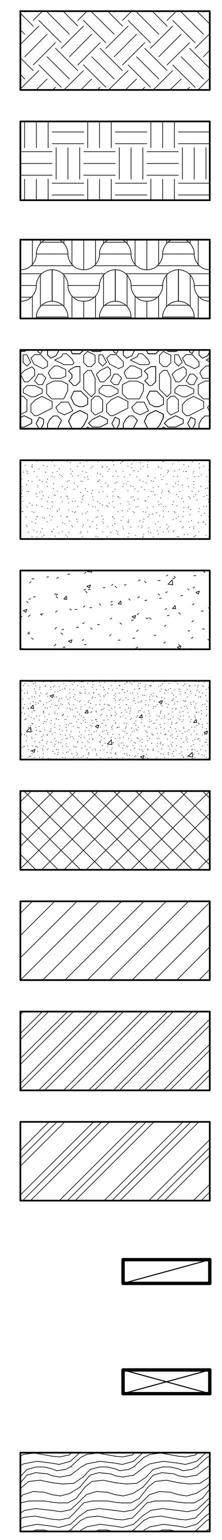

EARTH

EARTH, COMPACT FILL

EARTH, ROCK

GRAVEL, ROCK FILL

SAND, MORTAR, GROUT

CONCRETE, CAST IN PLACE

CONCRETE, PRE-CAST OR TILT UP

MASONRY, CLAY BRICK

MASONRY, CONCRETE

STEEL

ALUMINUM

WOOD BLOCKING OR SHIM

WOOD FRAMING CONTINUOUS

WOOD

STRUCTURAL GENERAL NOTES

S- 014100_N004A
190526. Q2

1. THE STRUCTURAL NOTES AND TYPICAL DETAILS, WHETHER SPECIFICALLY REFERENCED OR NOT, ARE GENERAL AND APPLY TO ALL CONSTRUCTION DOCUMENTS. PROVIDE ALL STRUCTURAL ELEMENTS INDICATED IN THE STRUCTURAL NOTES AND TYPICAL DETAILS AS REQUIRED TO CONFORM TO THE FINISHED PROJECT AS INDICATED IN OTHER CONSTRUCTION DOCUMENTS. PROVIDE ALL STRUCTURAL ELEMENTS INDICATED IN OTHER CONSTRUCTION DOCUMENTS. STRUCTURAL CONSTRUCTION DOCUMENTS SHALL BE USED IN CONJUNCTION WITH ALL OTHER CONSTRUCTION DOCUMENTS. SEE OTHER CONSTRUCTION DOCUMENTS FOR COMPLETE PROJECT REQUIREMENTS.
2. REFERENCES TO CONSTRUCTION DOCUMENTS ARE TO THE ENFORCEMENT AGENCY APPROVED DRAWINGS AND SPECIFICATIONS FOR THIS PROJECT. SUPPLEMENTAL DOCUMENTS INCLUDING, BUT NOT LIMITED TO, ADDENDA, REVISED DRAWINGS, FIELD INSTRUCTIONS AND MODIFICATIONS PRODUCED FOR THIS PROJECT, SHALL ALSO BE CONSIDERED A CONSTRUCTION DOCUMENT. ALL REQUIREMENTS OF THE INITIALLY APPROVED CONSTRUCTION DOCUMENTS SHALL APPLY TO ANY SUPPLEMENTAL DOCUMENTS.
3. WHERE THE CONSTRUCTION DOCUMENTS INDICATE TO NOTIFY THE STRUCTURAL ENGINEER, SUCH NOTIFICATION SHALL BE SUBMITTED IN WRITING WITH SUFFICIENT ALLOWANCE FOR A REASONABLE TIME PERIOD FOR REVIEW, DESIGN, ENFORCEMENT AGENCY APPROVAL AS REQUIRED AND WRITTEN RESPONSE SO AS NOT TO AFFECT THE CONSTRUCTION SCHEDULE. OBTAIN WRITTEN RESPONSE BEFORE PROCEEDING WITH THE AFFECTED WORK.
4. CAREFULLY EXAMINE THE CONSTRUCTION DOCUMENTS AND NOTIFY THE STRUCTURAL ENGINEER OF ANY CONFLICTS OR DISCREPANCIES WITHIN THE STRUCTURAL CONSTRUCTION DOCUMENTS AND BETWEEN ALL OTHER CONSTRUCTION DOCUMENTS. DEVIATIONS SHALL NOT BE MADE TO THE REQUIREMENTS INDICATED IN THE STRUCTURAL CONSTRUCTION DOCUMENTS.
5. PORTIONS OF THESE CONSTRUCTION DOCUMENTS ARE DIAGRAMMATIC ONLY. ITEMS INCLUDING, BUT NOT LIMITED TO, LOCATIONS, SIZES, QUANTITIES, ACCESSORIES AND CONNECTIONS ARE INDICATED IN A REPRESENTATIONAL MANNER AND MAY NOT BE COMPLETELY SHOWN. PROVIDE ALL WORK AND MATERIALS NECESSARY TO COMPLETE THE PROJECT AS REPRESENTED IN THE CONSTRUCTION DOCUMENTS.
6. DIMENSIONS AND ELEVATIONS INDICATED ARE FOR STRUCTURAL ELEMENTS ONLY. ELEVATIONS SHOWN ARE BASED ON A REFERENCE ELEVATION. COORDINATE REFERENCE ELEVATIONS WITH ACTUAL ELEVATIONS. COORDINATE WITH ALL OTHER CONSTRUCTION DOCUMENTS FOR DIMENSIONS AND ELEVATIONS NOT INDICATED ON THE STRUCTURAL CONSTRUCTION DOCUMENTS. DO NOT SCALE DRAWINGS.
7. CONSTRUCTION SHALL COMPLY WITH ALL BUILDING, HEALTH AND SAFETY STANDARDS, CODES AND REGULATIONS APPLICABLE TO THIS PROJECT. NOTHING IN THE CONSTRUCTION DOCUMENTS SHALL BE CONSTRUED TO PERMIT WORK NOT CONFORMING TO THE STANDARDS, CODES AND REGULATIONS.
8. REFERENCES TO STANDARDS, CODES AND REGULATIONS INCLUDING, BUT NOT LIMITED TO, ICC, IBC, CBC, ACI, ASTM, ASCE, ANSI, AWS, AISI, AITC AND AISC SHALL BE TO THE LATEST EDITION AS ADOPTED BY THE ENFORCEMENT AGENCY.
9. FEATURES OF CONSTRUCTION INDICATED ARE TYPICAL. WHERE FEATURES ARE NOT FULLY OR SPECIFICALLY INDICATED BY THE CONSTRUCTION DOCUMENTS, THEIR CONSTRUCTION SHALL BE AS INDICATED FOR IDENTICAL OR SIMILAR FEATURES ELSEWHERE IN THE CONSTRUCTION DOCUMENTS. IF ANY CONDITIONS REQUIRE CONSTRUCTION DIFFERENT THAN THAT INDICATED ON THE CONSTRUCTION DOCUMENTS, NOTIFY THE STRUCTURAL ENGINEER.
10. STRUCTURAL ELEMENTS SHALL NOT BE REMOVED OR MODIFIED UNLESS INDICATED IN THE STRUCTURAL CONSTRUCTION DOCUMENTS. IF STRUCTURAL ELEMENTS INTERFERE WITH THE WORK INDICATED IN ANY OTHER CONSTRUCTION DOCUMENTS, NOTIFY THE STRUCTURAL ENGINEER.
11. THE CONSTRUCTION DOCUMENTS AND THE DESIGNS INCORPORATED THEREIN, AS AN INSTRUMENT OF PROFESSIONAL SERVICE, ARE NOT TO BE USED, IN WHOLE OR IN PART, FOR ANY OTHER PROJECT.
12. STRUCTURAL ELEMENTS REPRESENTED IN THE CONSTRUCTION DOCUMENTS ARE INDICATED IN THEIR COMPLETED CONFIGURATION. THE CONSTRUCTION DOCUMENTS DO NOT INDICATE MEANS, METHODS OR SEQUENCES OF CONSTRUCTION UNLESS SPECIFICALLY NOTED OTHERWISE. PROVIDE ALL MEASURES NECESSARY AS REQUIRED FOR THE PROTECTION OF LIFE AND PROPERTY AND TO ASSURE THE CORRECT AND ACCURATE STRUCTURE GEOMETRY AND STABILITY DURING CONSTRUCTION. MEASURES SHALL INCLUDE, BUT NOT BE LIMITED TO, PROVIDING ADEQUATE FORMING, SHORING AND BRACING. MEASURES SHALL REMAIN IN PLACE UNTIL THE STRUCTURAL ELEMENTS AND ALL OTHER STRUCTURAL ELEMENTS USED TO SUPPORT THEM HAVE BEEN COMPLETED AND HAVE ATTAINED THEIR REQUIRED DESIGN STRENGTHS.
13. PROTECT ALL ELEMENTS, WHETHER CONCEALED OR NOT, INCLUDING, BUT NOT LIMITED TO, PROPERTIES, STRUCTURES, FINISHES, STREETS, LANDSCAPING AND UTILITIES ADJACENT TO OR ON THIS SITE DURING THE CONSTRUCTION OF THIS PROJECT. SHOULD DAMAGE OCCUR TO ANY ELEMENTS, THEY SHALL BE RESTORED TO THEIR ORIGINAL CONDITION AT NO ADDITIONAL COST TO THE OWNER. CONTROL ITEMS SUCH AS, BUT NOT LIMITED TO, DUST, DIRT, WATER, FUMES, SMOKE, TRASH, NOISE AND VIBRATION CREATED AS A RESULT OF ANY OPERATIONS DURING CONSTRUCTION IN CONFORMANCE WITH APPLICABLE STANDARDS, CODES AND REGULATIONS.
14. STRUCTURAL DESIGN LOADS, STRENGTHS, CAPACITIES AND CRITERIA INDICATED ON THE CONSTRUCTION DOCUMENTS ARE FOR THE COMPLETED STRUCTURE ONLY. THE USE OF ANY PART OR PARTS OF THE INCOMPLETE OR COMPLETED STRUCTURE FOR THE SUPPORT OF CONSTRUCTION ITEMS INCLUDING, BUT NOT LIMITED TO, OTHER PORTIONS OF THE STRUCTURE, PERSONNEL, MATERIALS AND EQUIPMENT IS LIMITED TO THE SAFE CAPACITY OF THE STRUCTURE AT THE TIME IT IS TO BE USED FOR SUCH SUPPORT. PROVIDE ALL MEASURES NECESSARY AS REQUIRED TO PREVENT OVERLOADING, EXCESSIVE MOVEMENT AND DAMAGE TO ANY PART OR PARTS OF THE STRUCTURE.
15. IF SUBSTITUTIONS ARE REQUESTED FOR STRUCTURAL ELEMENTS INDICATED IN THE CONSTRUCTION DOCUMENTS, NOTIFY THE STRUCTURAL ENGINEER. SUBMIT DATA AND DOCUMENTATION INCLUDING, BUT NOT LIMITED TO, COMPARATIVE QUALITY, SUITABILITY, PERFORMANCE, STRUCTURAL CAPACITY, ICC APPROVAL AND ENFORCEMENT AGENCY ACCEPTABILITY SUBSTANTIATING THE COMPLETE COMPLIANCE OF EACH PROPOSED SUBSTITUTION WITH THE CONSTRUCTION DOCUMENTS. ONLY ONE REQUEST FOR SUBSTITUTION WILL BE ALLOWED FOR EACH STRUCTURAL ELEMENT. SUBSTITUTIONS WILL NOT BE CONSIDERED WHEN SUBMITTALS ARE INCOMPLETE OR ACCEPTANCE WOULD REQUIRE REVISIONS TO THE CONSTRUCTION DOCUMENTS. PROVIDE OWNER REIMBURSEMENT FOR SERVICES REQUIRED TO OBTAIN ENFORCEMENT AGENCY APPROVAL OF SUBSTITUTIONS. IF A PROPOSED SUBSTITUTION SUBMITTAL IS NOT COMPLETE, NOT ACCEPTABLE TO THE STRUCTURAL ENGINEER, OR NOT APPROVED BY THE ENFORCEMENT AGENCY PROVIDE THE SPECIFIED ITEM AS INDICATED IN THE CONSTRUCTION DOCUMENTS. THE STRUCTURAL ENGINEER WILL BE THE SOLE JUDGE OF THE ACCEPTABILITY OF THE PROPOSED SUBSTITUTION VERSUS THE SPECIFIED ITEM. ACCEPTANCE OF A SUBSTITUTION SHALL NOT BE CONSTRUED TO PERMIT WORK NOT CONFORMING TO THE REQUIREMENTS OF THE CONSTRUCTION DOCUMENTS.
16. SCHEDULES, LEGENDS, ABBREVIATIONS, TYPICAL NOTES AND TYPICAL DETAILS ON THE STRUCTURAL CONSTRUCTION DOCUMENTS MAY REFERENCE STRUCTURAL ELEMENTS OR REQUIREMENTS NOT SPECIFICALLY INDICATED OR REQUIRED ELSEWHERE IN THE CONSTRUCTION DOCUMENTS.
17. THE STRUCTURAL CONSTRUCTION DOCUMENTS ARE NOT COMPLETE AND READY FOR CONSTRUCTION UNTIL THEY ARE APPROVED BY THE ENFORCEMENT AGENCY AND SIGNED BY THE STRUCTURAL ENGINEER.

STRUCTURAL DESIGN CRITERIA

S- 014100_N003A
170125. Q2

BUILDING CODE: 2019 CBC

ENFORCEMENT AGENCY: STATE FIRE MARSHALL

A. VERTICAL DESIGN CRITERIA (UNLESS OTHERWISE SHOWN OR NOTED)

ROOF LIVE LOADS:
- TYP ROOF AREA — 20 PSF (REDUCIBLE)
- MECHANICAL & ELECTRICAL AREA — 50 PSF (NON-REDUCIBLE)

GROUND SNOW LOAD: 0 PSF

B. LATERAL DESIGN CRITERIA

SEISMIC SITE CRITERIA: SS=2.49, S1 =0.96, SDS=1.66, SD1 =N/A, SITE CLASS: D

BUILDING CRITERIA:
SEISMIC:
- RISK CATEGORY= II (III FOR BUILDING M)
- IMPORTANCE FACTOR, I=1.00 (1.25 FOR BUILDING M)
- SEISMIC DESIGN CATEGORY = E
- SEISMIC FORCE RESISTING SYSTEM: WOOD SHEAR WALLS
- RESPONSE MODIFICATION FACTOR, R = 6.5
- DESIGN BASE SHEAR: V = 0.26W (0.32 W FOR BUILDING M)
- SEISMIC RESPONSE COEFFICIENT, Cs=0.26 (0.32 FOR BUILDING M)
- ANALYSIS PROCEDURE: EQUIVALENT LATERAL FORCE
- HORIZONTAL IRREGULARITIES: TYPE 2 (REENTRANT CORNER) AT BUILDING A & BUILDING M

WIND:
ULTIMATE DESIGN WIND SPEED, V(ULT) = 92 MPH (98 MPH FOR BUILDING M)
NOMINAL DESIGN WIND SPEED, V(ASD) = 71 MPH
RISK CATEGORY = II (III FOR BUILDING M)
WIND EXPOSURE = C
GCPI = +/- 0.18
COMPONENTS AND CLADDING WIND PRESSURES TO BE DETERMINED PER ASCE 7-16

C. SOIL DESIGN CRITERIA

SOIL INFO IS BASED ON GEOTECHNICAL REPORT BY:
SHN ENGINEERS AND GEOLOGISTS REPORT NO: 420027
DATED: AUGUST 2020

SPREAD FOUNDATIONS:
- ALLOWABLE BEARING PRESSURE:
  DL + LL = 3,000 PSF
  DL + LL + LATERAL = 4,000 PSF
- COEFFICIENT OF FRICTION = 0.35
- ALLOWABLE PASSIVE PRESSURE = 300 PCF
- BOTH PASSIVE PRESSURE AND FRICTIONAL RESISTANCE MAY BE COMBINED FOR LATERAL RESISTANCE.

STRUCTURAL DEFERRED SUBMITTALS

S- 013300_N001A
171002. Q2

1. SAD FOR LIST OF ITEMS THAT SHALL BE SUBMITTED FOR DEFERRED APPROVAL BY THE ENFORCEMENT AGENCY PRIOR TO FABRICATION OR INSTALLATION.
2. SEE THE SPECIFICATIONS AND STRUCTURAL DESIGN CRITERIA FOR REQUIRED PERFORMANCE AND LOADING CRITERIA.
3. DEFERRED SUBMITTALS ARE SUBJECT TO ALL THE REQUIREMENTS OF OTHER SUBMITTALS.
4. SUBMITTAL DOCUMENTS AND SUPPORTING DESIGN CALCULATIONS SHALL BE STAMPED AND SIGNED BY A CALIFORNIA REGISTERED PROFESSIONAL ENGINEER.
5. DOCUMENTS AND CALCULATIONS FOR DEFERRED SUBMITTAL ITEMS SHALL BE SUBMITTED TO THE ENGINEER FOR REVIEW FOR GENERAL CONFORMANCE WITH THE DESIGN OF THE PROJECT PRIOR TO SUBMITTAL TO THE ENFORCEMENT AGENCY.
6. DEFERRED SUBMITTAL ITEMS SHALL NOT BE FABRICATED OR INSTALLED UNTIL THEIR DESIGN AND SUBMITTAL DOCUMENTS HAVE BEEN APPROVED BY THE ENFORCEMENT AGENCY.

PROJECT DIRECTORY

S- 011000_N005A
170125. Q2

ARCHITECT
NICHOLS, MELBURG & ROSSETTO
300 KNOLLCREST DRIVE
REDDING, CA 96002
PHONE: 530.222.3300
FAX: 530.222.3538

STRUCTURAL ENGINEER
LIONAKIS
1919 19TH STREET
SACRAMENTO, CA 95811
CONTACT: DARRON HUNTINGDALE
PHONE: 916.558.1900
EMAIL: DARRON.HUNTINGDALE@lionakis.com
FAX: 916.558.1919

ASSOCIATE ARCHITECT
LIONAKIS
1919 19TH STREET
SACRAMENTO, CA 95811
PHONE: 916.558.1900
FAX: 916.558.1919

FOOD SERVICE
THE MARSHALL ASSOCIATES
240 3RD STREET, SUITE 2-B
OAKLAND, CA, 94607
PHONE: 415.677.1200
FAX: 415.677.1210

CIVIL ENGINEER
BKF ENGINEERING
200 FOURTH STREET, SUITE 300
SANTA ROSA, CA 95401
PHONE: 707.583.8530
FAX: 707.583.8539

LANDSCAPE ARCHITECT
MICHAEL LANDER ASLA
20270 LUPINE DRIVE
REDDING, CA 96003
PHONE: 530.223.2488

MECHANICAL ENGINEER
CAPITAL ENGINEERING CONSULTANTS INC.
11020 SUN CENTER DRIVE, SUITE 100
RANCHO CORDOVA, CA 95670
PHONE: 916.851.3500

ELECTRICAL ENGINEER
TK1SC
15231 LAGUNA CANYON ROAD, SUITE 100
IRVINE, CA 92618
PHONE: 916.751.5800

STRUCTURAL SHEET INDEX

SN011000-001

SHEET NUMBER	SHEET NAME
S001	GENERAL NOTES
S011	TYPICAL NOTES
S012	TYPICAL NOTES
S013	TYPICAL NOTES
S201A	ADMINISTRATION FOUNDATION PLAN
S202A	ADMINISTRATION ROOF FRAMING PLAN
S211A	ADMINISTRATION 3D VIEWS
S401A	ADMINISTRATION STRUCTURAL BUILDING SECTIONS
S402A	ADMINISTRATION STRUCTURAL BUILDING SECTIONS
S201C	COMET FOUNDATION PLAN
S202C	COMET ROOF FRAMING PLAN
S211C	COMET 3D VIEWS
S401C	COMET STRUCTURAL BUILDING SECTIONS
S201E	EDUCATION FOUNDATION PLAN
S202E	EDUCATION ROOF FRAMING PLAN
S211E	EDUCATION 3D VIEWS
S401E	EDUCATION STRUCTURAL BUILDING SECTIONS
S402E	EDUCATION STRUCTURAL BUILDING SECTIONS
S201HM	MEN'S HOUSING FOUNDATION PLAN
S202HM	MEN'S HOUSING ROOF FRAMING PLAN
S211HM	MEN'S HOUSING 3D VIEWS
S401HM	MEN'S HOUSING STRUCTURAL BUILDING SECTIONS
S201HW	WOMEN'S HOUSING FOUNDATION PLAN
S202HW	WOMEN'S HOUSING ROOF FRAMING PLAN
S211HW	WOMEN'S HOUSING 3D VIEWS
S401HW	WOMEN'S HOUSING STRUCTURAL BUILDING SECTIONS
S201M	MULTI-PURPOSE FOUNDATION PLAN
S202M	MULTI-PURPOSE ROOF FRAMING PLAN
S203M	MULTI-PURPOSE ROOF COLLECTOR/STRAP/SP NAILING PLAN
S211M	MULTI-PURPOSE 3D VIEWS
S401M	MULTI-PURPOSE STRUCTURAL BUILDING SECTIONS
S402M	MULTI-PURPOSE STRUCTURAL BUILDING SECTIONS
S403M	MULTI-PURPOSE STRUCTURAL BUILDING SECTIONS
S404M	MULTI-PURPOSE STRUCTURAL BUILDING SECTIONS
S201R	RECREATION FOUNDATION PLAN
S202R	RECREATION ROOF FRAMING PLAN
S211R	RECREATION 3D VIEWS
S401R	RECREATION STRUCTURAL BUILDING SECTIONS
S402R	RECREATION STRUCTURAL BUILDING SECTIONS
S201W	WAREHOUSE FOUNDATION PLAN
S202W	WAREHOUSE ROOF FRAMING PLAN
S211W	WAREHOUSE 3D VIEWS
S401W	WAREHOUSE STRUCTURAL BUILDING SECTIONS
S402W	WAREHOUSE STRUCTURAL BUILDING SECTIONS
S531	DETAILS - TYPICAL CONCRETE
S532	DETAILS - TYPICAL CONCRETE
S551	DETAILS - STRUCTURAL STEEL
S561	DETAILS - TYPICAL WOOD FRAMING
S562	DETAILS - TYPICAL WOOD FRAMING
S563	DETAILS - TYPICAL WOOD SHEAR WALL FRAMING
S564	DETAILS - TYPICAL WOOD TRUSS FRAMING
S565	DETAILS - TYPICAL MANUFACTURED LUMBER FRAMING
S566	DETAILS - WOOD FRAMING
S567	DETAILS - WOOD FRAMING
S568	DETAILS - WOOD FRAMING
S569	DETAILS - WOOD FRAMING
S570	DETAILS - WOOD FRAMING
S571	DETAILS - WOOD FRAMING
S701	CLT AND GLB TRUSS DETAILS
S702	DETAILS
S703	DETAILS - WOOD FRAMING
SHEET COUNT: 61	

IDENTIFICATION STAMP
DIV. OF THE STATE ARCHITECT
APP: 02-118630 INC:
REVIEWED FOR
SS ☐ FLS ☐ ACS ☑
DATE: 04/13/2021

OFFICE OF THE STATE FIRE MARSHAL
APPROVED FIRE AND PANIC ONLY
Approval of this plan does not authorize or approve any omission or deviation from applicable regulations. Final approval is subject to field inspection. One set of approved plans shall be available on the project site at all times.
PERMIT NO.: 20-N-2332-CP
REVIEWED BY: LITO CATAYLO, OSFM
DATE: 4/1/2021

GENERAL SERVICES
Department of General Services
State of California
Real Estate Services Division
Project Management & Development Branch
707 Third Street, Suite 4-105
West Sacramento, California 95605

NICHOLS MELBURG & ROSSETTO
ARCHITECTS + ENGINEERS
300 Knollcrest Drive
Redding, CA. 96002
(530) 222-3300 (530) 222-3538 FAX
http://www.nmrdesign.com

Copyright © 2021
All ideas, designs, arrangements and plans indicated or represented by this drawing are owned by, and the property of, NICHOLS, MELBURG and ROSSETTO and were created, evolved and developed for use on, and in conjunction with, the specified project. None of such ideas, designs, arrangements or plans shall be used by, or disclosed to any person, firm or corporation for any purpose whatsoever without the written permission of NICHOLS, MELBURG and ROSSETTO.

LICENSE STAMPS
REGISTERED PROFESSIONAL ENGINEER
DARRON E. HUNTINGDALE
No. S4788
STRUCTURAL
STATE OF CALIFORNIA
3/19/2021

STRUCTURAL CONSULTANT
LIONAKIS
1919 Nineteenth Street
Sacramento CA 95811
P 916.558.1900 F 916.558.1919
www.lionakis.com

DRAWING STATUS
CONSTRUCTION DOCUMENTS

ISSUE

No.	Date	Description
1	10/22/2020	INITIAL PLAN REVIEW
2	01/08/2021	AGENCY RESUBMITTAL
3	03/22/2021	AGENCY RESUBMITTAL

If drawing is not 30" x 42" it is a reduced print

PROJECT
RESIDENTIAL CENTER, UKIAH: REPLACEMENT OF EXISTING RESIDENTIAL CENTER
440 EAST HILL ROAD
WILLITS, CALIFORNIA 95490
MENDOCINO COUNTY
CALIFORNIA CONSERVATION CORP

Supervisor | Designed | Drawn: Author

DSA Application No.
02-118630

SHEET TITLE
GENERAL NOTES

DGS Project Number: 000000000001826
Lionakis Project Number: 018322

Reference North: NORTH
Sheet Scale: As indicated
Sheet Number: S001

ISSUE DATE
July 9, 2021

Plot Date: 3/19/2021 11:19:37 AM
File Name: BIM 360://CCC Willits Residential Center/018322_S-MASTER_R18_CENTRAL.rvt

STRUCTURAL SUBMITTALS

S- 013300 N002A
170125. Q2

1. SUBMITTALS INCLUDE, BUT ARE NOT LIMITED TO, SHOP DRAWINGS, FABRICATION DRAWINGS, PLACEMENT DRAWINGS, CALCULATIONS, DESIGNS, TEST DATA, PRODUCT DATA, SAMPLES, CERTIFICATIONS AND REPORTS AS REQUIRED BY THE CONSTRUCTION DOCUMENTS.
2. SUBMITTALS, AS A MINIMUM, SHALL CONSIST OF TWO (2) COPIES OF EACH SHEET OR ELECTRONIC SUBMITTAL AS PERMITTED BY THE SPECIFICATIONS.
3. SUBMITTALS SHALL NOT CONTAIN NOR CONSIST OF REPRODUCTIONS OF THE CONSTRUCTION DOCUMENTS. SUBMITTALS CONTAINING REPRODUCTIONS OF ANY PORTION OF THE CONSTRUCTION DOCUMENTS ARE SUBJECT TO REJECTION.
4. EACH SUBMITTAL SHALL HAVE A COVER SHEET IDENTIFYING THE CONTENTS BY SPECIFICATION SECTION AND LISTING EACH ITEM AND SHEET NUMBER. EACH SUBMITTAL SHALL HAVE A UNIQUE IDENTIFICATION NUMBER.
5. PRIOR TO SUBMISSION TO THE STRUCTURAL ENGINEER, STAMP SUBMITTALS INDICATING THEY HAVE BEEN REVIEWED AND APPROVED FOR COMPLETENESS AND CONFORMANCE WITH THE INTENT OF THE CONSTRUCTION DOCUMENTS. SUBMITTALS THAT ARE DETERMINED TO BE INCOMPLETE, IN THE JUDGMENT OF THE STRUCTURAL ENGINEER, WILL BE RETURNED WITHOUT REVIEW SO THEY CAN BE COMPLETED. THE STRUCTURAL ENGINEER SHALL NOT BE REQUIRED TO REVIEW PARTIAL SUBMISSIONS OR THOSE FOR WHICH SUBMISSIONS OF CORRELATED ITEMS HAVE NOT BEEN RECEIVED.
6. PRIOR TO SUBMISSION TO THE STRUCTURAL ENGINEER, THE OWNER'S TESTING LABORATORY SHALL STAMP THE FOLLOWING MARKED SUBMITTALS INDICATING THEY HAVE BEEN REVIEWED AND APPROVED FOR COMPLETENESS AND CONFORMANCE WITH THE INTENT OF THE CONSTRUCTION DOCUMENTS:
   - ■ CONCRETE MIX DESIGNS AND SUBSTANTIATING TEST DATA
   - ■ MASONRY GROUT MIX DESIGNS AND SUBSTANTIATING TEST DATA
   - ■ WELDING PROCEDURE SPECIFICATIONS
7. SUBMITTALS SHALL BE REVIEWED BY THE STRUCTURAL ENGINEER PRIOR TO UTILIZATION, INSTALLATION, FABRICATION OR CONSTRUCTION OF ITEMS CONTAINED WITHIN THE SUBMITTALS.
8. SUBMITTALS SHALL BE DELIVERED TO THE STRUCTURAL ENGINEER TO ALLOW SUFFICIENT TIME, IN THE STRUCTURAL ENGINEER'S JUDGMENT, FOR A REASONABLE PERIOD FOR ADEQUATE REVIEW, ENFORCEMENT AGENCY APPROVAL AS REQUIRED AND RESPONSE SO AS NOT TO AFFECT THE CONSTRUCTION SCHEDULE. ALLOW THE STRUCTURAL ENGINEER THE GREATER SUBMITTAL REVIEW PERIOD OF: TEN (10) WORK DAYS; OR FIVE (5) WORK DAYS FOR EACH 100 SHEETS, OR PORTION THEREOF, FOR EACH SUBMITTAL. SUBMITTAL REVIEW PERIOD COMMENCES THE NEXT WORK DAY AFTER SUBMITTAL RECEIPT BY THE STRUCTURAL ENGINEER. CONCURRENT SUBMITTALS OF MULTIPLE PORTIONS OF THE SAME SUBMITTAL ITEM WILL BE REVIEWED IN THEIR ENTIRETY AS ONE SUBMITTAL SUBJECT TO THE REVIEW PERIOD LIMITATION ABOVE. SCHEDULE SUBMITTAL REVIEWS AND CONSTRUCTION ACCORDINGLY.
9. REVIEW OF SUBMITTALS BY THE STRUCTURAL ENGINEER WILL INCLUDE CHECKING FOR GENERAL CONFORMANCE WITH THE DESIGN CONCEPT AND GENERAL COMPLIANCE WITH THE INFORMATION GIVEN IN THE CONSTRUCTION DOCUMENTS. IT WILL NOT INCLUDE REVIEW OF THE ACCURACY OR COMPLETENESS OF ITEMS SUCH AS QUANTITIES, DIMENSIONS, WEIGHTS OR GAUGES, FABRICATION PROCESSES, CONSTRUCTION MEANS OR METHODS, COORDINATION WITH THE WORK OF OTHER TRADES, OR CONSTRUCTION SAFETY PRECAUTIONS. REVIEW OF A SPECIFIC ITEM SHALL NOT INDICATE THAT THE STRUCTURAL ENGINEER HAS REVIEWED THE ENTIRE ASSEMBLY OF WHICH THE ITEM IS A COMPONENT. THE STRUCTURAL ENGINEER SHALL NOT BE RESPONSIBLE FOR ANY DEVIATIONS FROM THE CONSTRUCTION DOCUMENTS NOT BROUGHT TO THE STRUCTURAL ENGINEER'S ATTENTION IN WRITING.
10. SUBMITTALS PROCESSED BY THE STRUCTURAL ENGINEER ARE NOT CHANGE ORDERS.
11. SUBMITTALS THAT WILL REQUIRE ADDITIONAL REVIEW, IN THE STRUCTURAL ENGINEER'S JUDGMENT, WILL BE MARKED "RESUBMIT". THE SUBMITTAL SHALL BE REVISED AND RESUBMITTED FOR RE-REVIEW AND IS SUBJECT TO ALL THE REQUIREMENTS OF THE INITIAL SUBMITTAL. PROVIDE OWNER REIMBURSEMENT FOR STRUCTURAL ENGINEER COSTS INCURRED TO RE-REVIEW SUBMITTALS.
12. SUBMITTALS THAT HAVE BEEN REVIEWED AND RETURNED BY THE STRUCTURAL ENGINEER, REGARDLESS OF MARKINGS ON THE SUBMITTALS, SHALL NOT BE CONSTRUED TO PERMIT WORK NOT CONFORMING TO THE REQUIREMENTS OF THE CONSTRUCTION DOCUMENTS.
13. THE MINIMUM REQUIRED STRUCTURAL SUBMITTALS INCLUDE, BUT ARE NOT LIMITED TO THE FOLLOWING MARKED ITEMS:
   - □ PILE FABRICATION DRAWINGS AND CALCULATIONS
   - ■ CONCRETE MIX DESIGNS AND SUBSTANTIATING TEST DATA
   - ■ CONCRETE REINFORCING PLACEMENT DRAWINGS
   - ■ CONCRETE PRODUCT CERTIFICATION AND DATA SHEETS
   - ■ CONCRETE SLAB JOINT LAYOUT
   - ■ MASONRY REINFORCING PLACEMENT DRAWINGS
   - ■ MASONRY GROUT MIX DESIGNS AND SUBSTANTIATING TEST DATA
   - ■ MASONRY MORTAR MIX DESIGNS
   - ■ MASONRY PRODUCT CERTIFICATION AND DATA SHEETS
   - ■ STRUCTURAL STEEL SHOP DRAWINGS
   - □ STEEL DECK PLACEMENT DRAWINGS AND DATA SHEETS
   - ■ WELDING PROCEDURE SPECIFICATIONS
   - ■ METAL-PLATE-CONNECTED WOOD TRUSS PLACEMENT DRAWINGS AND CALCULATIONS
   - ■ WOOD I-JOIST PLACEMENT DRAWINGS AND CALCULATIONS
   - ■ METAL WEB WOOD JOIST PLACEMENT DRAWINGS AND CALCULATIONS
   - □ GLUED-LAMINATED TIMBER FABRICATION AND PLACEMENT DRAWINGS AND CERTIFICATIONS
   - ■ PRE-ENGINEERED LUMBER CERTIFICATIONS AND DATASHEETS
   - □ OPEN WEB STEEL JOIST PLACEMENT DRAWINGS AND CALCULATIONS
   - □ PRE-ENGINEERED STEEL STAIR SHOP DRAWINGS AND CALCULATIONS
   - □ COLD-FORMED STEEL FRAMING PRODUCTS, ACCESSORIES, DATA SHEETS AND CALCULATIONS

STRUCTURAL TESTING & INSPECTION

S- 014500 N002A
181002. Q2

1. SPECIAL INSPECTION IS DEFINED AS THE INSPECTION OF THE MATERIALS, INSTALLATION, FABRICATION, ERECTION OR PLACEMENT OF COMPONENTS AND CONNECTIONS REQUIRING SPECIAL EXPERTISE TO ENSURE COMPLIANCE WITH APPROVED CONSTRUCTION DOCUMENTS AND REFERENCED STANDARDS.
2. THE OWNER SHALL EMPLOY ONE OR MORE SPECIAL INSPECTORS TO PERFORM INSPECTIONS DURING CONSTRUCTION ON THE TYPES OF WORK MARKED IN THE LIST BELOW IN CONFORMANCE WITH THE ENFORCEMENT AGENCY REGULATORY REQUIREMENTS. THESE INSPECTIONS ARE IN ADDITION TO THE INSPECTIONS REQUIRED BY THE ENFORCEMENT AGENCY.
   A. TESTING
      - ■ COMPACTED FILL
      - ■ CONCRETE
      - ■ MASONRY
      - ■ MORTAR & GROUT
      - ■ EXPANSION, EPOXY, SCREW ANCHORS
      - ■ SHOT-IN ANCHORS

   B. SPECIAL INSPECTIONS
      - ■ EXCAVATION, GRADING & FILLING FOR ALL FOUNDATION WORK
      - □ PILE DRIVING & TESTING
      - ■ PLACEMENT OF CONCRETE & REINFORCEMENT
      - ■ PLACEMENT OF MASONRY & REINFORCEMENT & DURING GROUTING OPERATIONS
      - ■ SHOP WELDS NOT DONE IN FABRICATOR'S SHOP REGISTERED & APPROVED BY THE BUILDING OFFICIAL
      - ■ FIELD WELDING
      - ■ HIGH-STRENGTH BOLTING
      - ■ EXPANSION, EPOXY, SCREW ANCHORS
      - □ SPRAY-APPLIED FIRE PROOFING
      - □ SHOTCRETE
      - □ GLU-LAM FABRICATION
      - ■ I-JOIST FABRICATION
      - □ WELDED SHEAR STUDS
3. THE SPECIAL INSPECTOR SHALL BE A QUALIFIED PERSON WHO SHALL DEMONSTRATE COMPETENCE, TO THE SATISFACTION OF THE ENFORCEMENT AGENCY AND THE ARCHITECT/STRUCTURAL ENGINEER, FOR THE INSPECTION OF THE PARTICULAR TYPE OF CONSTRUCTION OR OPERATION REQUIRING SPECIAL INSPECTION.
4. SPECIAL INSPECTORS SHALL KEEP RECORDS OF INSPECTIONS. THE SPECIAL INSPECTOR SHALL FURNISH INSPECTION REPORTS TO THE ENFORCEMENT AGENCY, OWNER, CONTRACTOR AND ARCHITECT/STRUCTURAL ENGINEER. REPORTS SHALL INDICATE THAT WORK INSPECTED WAS OR WAS NOT COMPLETED IN CONFORMANCE TO APPROVED CONSTRUCTION DOCUMENTS.
5. DISCREPANCIES IN THE INSPECTED WORK SHALL BE BROUGHT TO THE IMMEDIATE ATTENTION OF THE CONTRACTOR FOR CORRECTION. IF THEY ARE NOT CORRECTED, THE DISCREPANCIES SHALL BE BROUGHT TO THE ATTENTION OF THE ENFORCEMENT AGENCY, OWNER, CONTRACTOR AND ARCHITECT/STRUCTURAL ENGINEER PRIOR TO THE COMPLETION OF THAT PHASE OF THE WORK.
6. A FINAL REPORT DOCUMENTING REQUIRED SPECIAL INSPECTIONS AND CORRECTION OF ANY DISCREPANCIES NOTED IN THE INSPECTIONS SHALL BE SUBMITTED TO THE ENFORCEMENT AGENCY, OWNER, CONTRACTOR AND ARCHITECT/STRUCTURAL ENGINEER AT THE COMPLETION OF THE WORK INCLUDED IN THE CONSTRUCTION DOCUMENTS.
7. SCHEDULE AND COORDINATE ALL STRUCTURAL TESTS AND SPECIAL INSPECTIONS. NOTIFY THE SPECIAL INSPECTOR 48 HOURS MINIMUM PRIOR TO PERFORMING ANY WORK REQUIRING THE SPECIAL INSPECTOR'S PRESENCE. COORDINATE WITH THE SPECIAL INSPECTOR SO THAT THE WORK REQUIRING THE TESTS AND INSPECTIONS NOTED ABOVE IS ACCESSIBLE AND EXPOSED FOR TESTING AND INSPECTION PURPOSES. REMOVE AND/OR REPLACE MATERIALS AS REQUIRED AT NO ADDITIONAL COST TO THE OWNER TO ALLOW TESTS AND INSPECTIONS.

STRUCTURAL OBSERVATION

S- 014500 N001A
170125. Q2

1. STRUCTURAL OBSERVATION IS THE VISUAL OBSERVATION OF THE STRUCTURAL SYSTEM BY THE STRUCTURAL OBSERVER (THE STRUCTURAL ENGINEER OR OWNER'S DESIGNATED REPRESENTATIVE) FOR GENERAL CONFORMANCE TO THE ENFORCEMENT AGENCY APPROVED CONSTRUCTION DOCUMENTS AT SIGNIFICANT CONSTRUCTION STAGES AND AT COMPLETION OF THE STRUCTURAL SYSTEM.
2. STRUCTURAL OBSERVATION DOES NOT INCLUDE OR WAIVE THE RESPONSIBILITY FOR THE INSPECTIONS REQUIRED BY THE ENFORCEMENT AGENCY OR BY OTHER SECTIONS OF THE BUILDING CODE. REQUIRED INSPECTIONS DO NOT INCLUDE OR WAIVE THE RESPONSIBILITY FOR STRUCTURAL OBSERVATION.
3. STRUCTURAL OBSERVATION DOES NOT INCLUDE THE SUPERVISION OF CONSTRUCTION FOR PROPER EXECUTION OF THE WORK SHOWN IN THE CONSTRUCTION DOCUMENTS.
4. THE FOLLOWING COMPLETED CONSTRUCTION STAGES MARKED ARE SUBJECT TO STRUCTURAL OBSERVATION IF DEEMED NECESSARY DURING CONSTRUCTION BY THE STRUCTURAL OBSERVER:
   - ■ FOUNDATION EXCAVATIONS AND REINFORCEMENT PRIOR TO CONCRETE PLACEMENT
   - □ FORMWORK CONSTRUCTION AND REINFORCEMENT PRIOR TO CONCRETE PLACEMENT
   - □ CONCRETE TILT-UP PANEL INSTALLATION
   - □ CONCRETE PRE-CAST ELEMENT PANEL INSTALLATION
   - ■ MASONRY INSTALLATION AND REINFORCEMENT PRIOR TO GROUT PLACEMENT
   - ■ STEEL FRAMING ERECTION
   - □ STEEL DECK INSTALLATION AND REINFORCEMENT PRIOR TO CONCRETE FILL PLACEMENT
   - □ STEEL DECK INSTALLATION ON FRAMING
   - ■ WOOD FRAMING ERECTION
   - ■ WOOD STRUCTURAL PANEL INSTALLATION ON FRAMING
   - ■ WOOD HARDWARE AND CONNECTOR INSTALLATION ON STRUCTURAL FRAMING
   - □ COLD-FORMED STEEL FRAMING ERECTION
   - ■ PRE-FABRICATED STRUCTURAL ELEMENT INSTALLATION
   - ■ PRIOR TO THE CLOSING OF ANY PHASE
   - ■ STRUCTURAL SYSTEM COMPLETION
5. NOTIFY THE STRUCTURAL OBSERVER 48 HOURS MINIMUM IN ADVANCE OF THE COMPLETION OF THE ABOVE CONSTRUCTION STAGES TO FACILITATE STRUCTURAL OBSERVATIONS BY THE STRUCTURAL OBSERVER. COORDINATE WITH THE STRUCTURAL OBSERVER SO THAT THE WORK FOR THE CONSTRUCTION STAGES NOTED ABOVE IS ACCESSIBLE AND EXPOSED FOR STRUCTURAL OBSERVATION PURPOSES. REMOVE AND/OR REPLACE MATERIALS AS REQUIRED AT NO ADDITIONAL COST TO THE OWNER TO ALLOW STRUCTURAL OBSERVATION.
6. DEVIATIONS FROM THE CONSTRUCTION DOCUMENTS NOTED DURING STRUCTURAL OBSERVATIONS SHALL BE CORRECTED AT NO ADDITIONAL COST TO THE OWNER.
7. PROVIDE OWNER REIMBURSEMENT FOR DESIGN PROFESSIONAL COSTS INCURRED TO CORRECT DEVIATIONS AND TO MAKE REVISIONS TO THE CONSTRUCTION DOCUMENTS, INCLUDING OBTAINMENT OF ENFORCEMENT AGENCY APPROVAL AS REQUIRED.
8. CORRECTIVE WORK SHALL COMPLY WITH THE REQUIREMENTS OF THE ENFORCEMENT AGENCY APPROVED CONSTRUCTION DOCUMENTS AND THE BUILDING CODE.
9. AT THE COMPLETION OF THE WORK INCLUDED IN THE CONSTRUCTION DOCUMENTS, THE STRUCTURAL OBSERVER SHALL SUBMIT TO THE ENFORCEMENT AGENCY A WRITTEN STATEMENT THAT THE STRUCTURAL OBSERVATIONS HAVE BEEN MADE AND IDENTIFY ANY REPORTED DEFICIENCIES THAT, TO THE BEST OF THE STRUCTURAL OBSERVER'S KNOWLEDGE, HAVE NOT BEEN RESOLVED.

FIRE SPRINKLER COORDINATION

S- 210000 N001A
180620. Q2

1. AUTOMATIC FIRE SPRINKLER SYSTEM (AFSS) DESIGN AND INSTALLATION SHALL COMPLY WITH THE REQUIREMENTS OF THE BUILDING CODE, ASCE 7, AND NFPA 13.
2. THE ABOVE GROUND PORTION OF THE AFSS SHALL BE DESIGNED BY A CALIFORNIA LICENSED MECHANICAL ENGINEER, FIRE PROTECTION ENGINEER, OR A DESIGN/BUILD C-16 FIRE PROTECTION CONTRACTOR.
3. INSTALLATION SHALL NOT BEGIN PRIOR TO OBTAINING APPROVAL FROM THE ENFORCEMENT AGENCY AND REVIEW BY ARCHITECT AND STRUCTURAL ENGINEER.
4. INSTALL AFSS PIPING WITH 2" MINIMUM CLEARANCE FROM STRUCTURAL MEMBERS NOT PENETRATED OR USED TO SUPPORT THE PIPING.
5. INSTALL APPROVED SEISMIC SEPARATION ASSEMBLIES WHERE AFSS PIPING, REGARDLESS OF SIZE, CROSSES BUILDING SEISMIC SEPARATION JOINTS AT GROUND LEVEL AND ABOVE. PROVIDE A FOUR-WAY BRACE TO PIPING AT EACH SIDE OF ASSEMBLIES. ATTACH BRACE TO PIPING, NOT THE ASSEMBLIES, WITHIN 6' OF THE ASSEMBLIES.
6. AFSS PIPING SHALL PASS THROUGH HOLES/SLEEVES IN WALLS, FLOORS, ROOFS OR FOUNDATIONS. COMPLY WITH ALL STRUCTURAL DETAILS AND THE FOLLOWING: PROVIDE 2" NOMINAL CLEAR AT HOLES/SLEEVES FOR PIPES 3 1/2" AND SMALLER. PROVIDE 4" NOMINAL CLEAR AT HOLES/SLEEVES FOR PIPES 4" AND LARGER.
7. AFSS PIPING SHALL NOT PENETRATE OR INTERRUPT FRAMING MEMBERS INCLUDING BUT NOT LIMITED TO STUDS, POSTS, COLUMNS, JOISTS, RAFTERS, BEAMS AND GIRDERS. DO NOT CUT OR DRILL FRAMING MEMBERS UNLESS SPECIFICALLY NOTED.
8. AFSS PIPING HANGERS, COMPONENTS AND FASTENERS SHALL BE LISTED, FERROUS, AND DESIGNED TO SUPPORT FIVE TIMES THE TRIBUTARY WEIGHT OF WATER-FILLED PIPE PLUS 250 POUNDS.
9. PIPING HANGERS SHALL NOT BE SUBJECTED TO BENDING. INSTALL WITH SWIVELS, EYE NUTS, ARTICULATING ATTACHMENTS OR OTHER DEVICES TO PREVENT BENDING.
10. PIPING HANGERS SHALL BE SUBSTANTIALLY SUPPORTED FROM THE BUILDING STRUCTURE. C-TYPE CLAMPS USED TO ATTACH HANGERS TO THE BUILDING STRUCTURE SHALL BE EQUIPPED WITH A RESTRAINING STRAP. POWER ACTUATED FASTENERS SHALL NOT BE USED TO ATTACH HANGERS TO THE BUILDING STRUCTURE.
11. STRUCTURE HAS BEEN DESIGNED TO SUPPORT THE TRIBUTARY WEIGHT OF WATER-FILLED PIPE PLUS 250 POUNDS AT EACH SPRINKLER SUPPORT POINT, WITHIN FRAMING LIMITATIONS NOTED BELOW. INSTALL TRAPEZE HANGERS WHERE NECESSARY TO SUPPORT PIPING FROM APPROPRIATE STRUCTURAL FRAMING MEMBERS.
12. THE MAXIMUM DISTANCE BETWEEN AFSS PIPING HANGERS SHALL NOT EXCEED: 12' FOR STEEL PIPE 1 1/4" AND SMALLER; 15' FOR STEEL PIPE 1 1/2" AND LARGER; 12' FOR THREADED LIGHTWALL STEEL PIPE 1" TO 3".
13. PROVIDE ONE HANGER MINIMUM ON EACH SECTION OF PIPE, BETWEEN EACH BRANCH LINE AT MAINS, AND AT THE ENDS OF MAINS. HANGER CLEARANCE TO UPRIGHT SPRINKLER SHALL BE 3" MINIMUM.
14. WOOD FRAMING SUPPORTING AFSS PIPING HANGERS SHALL COMPLY WITH THE FOLLOWING: DO NOT SUPPORT PIPING FROM STRUCTURAL PANELS OR 2X AND SMALLER FRAMING/DECKING UNO. SUPPORT PIPING 2" AND SMALLER FROM 3X MINIMUM FRAMING/DECKING OR WITH THROUGH BOLTS TO THE SIDES OF 2X FRAMING. SUPPORT PIPING 2 1/2" TO 6" FROM 4X MINIMUM FRAMING. SUPPORT PIPING 8" FROM 6X MINIMUM FRAMING. DO NOT SUPPORT PIPING FROM FRAMING LESS THAN 8" DEEP. DO NOT SUPPORT MORE THAN ONE PIPING HANGER AT ANY MEMBER LESS THAN 6X MINIMUM. SCREWS OR BOLTS IN THE SIDES OF FRAMING SHALL NOT BE INSTALLED LESS THAN 3" OR 1/3 THE FRAMING DEPTH FROM THE BOTTOM.
15. STEEL FRAMING SUPPORTING AFSS PIPING HANGERS SHALL COMPLY WITH THE FOLLOWING: DO NOT SUPPORT PIPING FROM BARE STEEL DECK. DO NOT SUPPORT PIPING 2 1/2" AND GREATER FROM CONCRETE FILLED STEEL DECK OR CONCRETE SLABS. DO NOT SUPPORT PIPING FROM FRAMING LESS THAN 8" DEEP. DO NOT SUPPORT MORE THAN ONE PIPING HANGER AT ANY MEMBER LESS THAN 12" DEEP.
16. LATERAL BRACING SHALL BE PROVIDED ON ALL FEED AND CROSS MAINS REGARDLESS OF PIPING SIZE, ON ALL OTHER PIPING 2 1/2" AND LARGER, AND SHALL BE SPACED AT A MAXIMUM OF 40' ON CENTER. THE LAST LENGTH OF PIPE AT THE END OF PIPE RUNS BEING BRACED SHALL BE PROVIDED WITH A BRACE WITHIN 6' OF THE END OF THE PIPE.
17. LONGITUDINAL BRACING SHALL BE PROVIDED ON ALL FEED AND CROSS MAIN PIPING, AND SHALL BE SPACED AT A MAXIMUM OF 80' ON CENTER. PROVIDE A BRACE WITHIN 40' OF EACH END OF EACH RUN OF PIPE.
18. LONGITUDINAL BRACES SHALL BE ALLOWED TO ACT AS LATERAL BRACES IF THEY ARE WITHIN 24" OF THE CENTER LINE OF THE PIPING BRACED LATERALLY. LATERAL BRACES SHALL BE ALLOWED TO ACT AS LONGITUDINAL BRACES IF THEY ARE WITHIN 24" OF THE CENTERLINE OF THE PIPING BRACED LONGITUDINALLY AND THE LATERAL BRACE IS ON A PIPE OF EQUAL OR GREATER SIZE THAN THE PIPE BEING BRACED LONGITUDINALLY.
19. EACH RUN OF PIPE BETWEEN CHANGES IN DIRECTION SHALL BE PROVIDED WITH BOTH LATERAL AND LONGITUDINAL BRACING OTHER THAN PIPE RUNS LESS THAN 12' LONG.
20. BRACE ATTACHMENT TO PIPING SHALL BE LOCATED WITHIN 6" OF A HANGER OF A TYPE THAT PREVENTS UPWARD MOVEMENT OF THE PIPE. HANGER L/R AT BRACE SHALL NOT EXCEED 200.
21. BRACES SHALL BE ATTACHED DIRECTLY TO FEED AND CROSS MAINS. INSTALL SO THAT CONNECTIONS ARE TIGHT AND IN STRAIGHT LINES TO AVOID ECCENTRIC LOADINGS ON BRACES, COMPONENTS, AND FASTENERS. POWER ACTUATED FASTENERS, LAG SCREWS, OR C-TYPE CLAMPS SHALL NOT BE USED TO ATTACH BRACES TO THE BUILDING STRUCTURE.
22. THREADED PIPE USED AS PART OF A BRACE ASSEMBLY SHALL BE SCHEDULE 40 MINIMUM.
23. TOPS OF RISERS EXCEEDING 3' IN LENGTH SHALL BE PROVIDED WITH A FOUR-WAY BRACE.
24. BRANCH LINE PIPING SHALL BE VERTICALLY AND LATERALLY RESTRAINED AT INTERVALS NOT EXCEEDING 40' AND AT EACH END SPRINKLER ON A LINE. SPRIGS 4' OR LONGER SHALL BE LATERALLY RESTRAINED.
25. AFSS SUBMITTAL DRAWINGS FOR STRUCTURAL REVIEW SHALL SHOW LOCATIONS AND SIZES OF ALL PIPING, HANGERS, BRACING AND THEIR ATTACHMENTS TO THE BUILDING STRUCTURE. PROVIDE CALCULATIONS FOR MAXIMUM VERTICAL AND LATERAL LOADS FOR EACH HANGER TYPE, AND DETAILS FOR HANGERS, BRACES AND ANCHORS SHOWING MATERIALS FOR ANCHORAGE, ETC. INCLUDE IN SUBMITTAL ICC REPORTS FOR ALL ANCHORS INDICATING ALLOWABLE LOADS FOR THE SPECIFIC CONFIGURATION OF STRUCTURE CONNECTED TO.

FOUNDATION AND EARTHWORK

S- 033000 N003A
170125. Q2

1. ALL FOUNDATION AND EARTHWORK INCLUDING, BUT NOT LIMITED TO, EXCAVATION, GRADING, FILLING, SUB-GRADE PREPARATION, SOIL TREATMENT, ASSOCIATED SITE WORK, TRENCHING AND BACKFILLING SHALL BE PERFORMED IN ACCORDANCE WITH THE CONSTRUCTION DOCUMENTS.
2. THE GEOTECHNICAL INFORMATION PROVIDED IS BASED UPON A GEOTECHNICAL REPORT PROVIDED BY THE OWNER FOR THIS PROJECT. THE GEOTECHNICAL REPORT WAS USED FOR THE DESIGN INDICATED IN THESE CONSTRUCTION DOCUMENTS. THE GEOTECHNICAL REPORT AND THE RECOMMENDATIONS CONTAINED THEREIN SHALL BE USED IN CONJUNCTION WITH THE CONSTRUCTION DOCUMENTS. COMPLY WITH THE REQUIREMENTS AND RECOMMENDATIONS CONTAINED IN THE GEOTECHNICAL REPORT.
3. THE GEOTECHNICAL INFORMATION PROVIDED IS NOT A WARRANTY OF THE SITE OR SUBSURFACE CONDITIONS. PRIOR TO BIDDING AND AT NO COST TO THE OWNER, SITE VISITS TO INVESTIGATE OR TO PERFORM ADDITIONAL SUBSURFACE INVESTIGATIONS MAY BE MADE TO DETERMINE THE EXISTING CONDITIONS. SUCH INVESTIGATIONS MAY BE PERFORMED ONLY UNDER TIME SCHEDULES AND ARRANGEMENTS APPROVED BY THE OWNER IN ADVANCE.
4. AN OWNER-RETAINED SPECIAL INSPECTOR/GEOTECHNICAL ENGINEER SHALL PROVIDE TESTING AND INSPECTION SERVICES DURING ALL FOUNDATION AND EARTHWORK. PRIOR TO REQUESTING AN ENFORCEMENT AGENCY FOUNDATION INSPECTION, OBTAIN WRITTEN DOCUMENTATION FROM THE SPECIAL INSPECTOR/GEOTECHNICAL ENGINEER THAT THE FOUNDATION AND EARTHWORK IS IN CONFORMANCE WITH THE CONSTRUCTION DOCUMENTS.
5. NOTIFY THE SPECIAL INSPECTOR/GEOTECHNICAL ENGINEER 48 HOURS IN ADVANCE OF THE TIME WHEN THE FOUNDATION EXCAVATIONS AND EARTHWORK WILL BE COMPLETE AND READY FOR FORMS OR REINFORCING PLACEMENT. NO FORMS OR REINFORCING SHALL BE PLACED IN ANY FOUNDATION UNTIL THE EXCAVATION HAS BEEN INSPECTED AND APPROVED BY THE SPECIAL INSPECTOR/GEOTECHNICAL ENGINEER.
6. FOUNDATIONS SHALL EXTEND INTO FIRM BEARING IN UNDISTURBED SOIL, OR WHERE REQUIRED, IN COMPACTED FILL MATERIAL OR CONTROLLED LOW-STRENGTH MATERIAL PER THE CONSTRUCTION DOCUMENTS. FOUNDATION DEPTHS SHOWN ON THE CONSTRUCTION DOCUMENTS ARE MINIMUM DEPTHS ONLY. FOUNDATION EXCAVATIONS MAY BE REQUIRED TO BE OVER-EXCAVATED TO REACH SUITABLE BEARING MATERIAL. WHERE THE SPECIAL INSPECTOR/GEOTECHNICAL ENGINEER HAS DETERMINED OVER-EXCAVATION IS REQUIRED, THE REMOVED MATERIAL MAY BE REPLACED WITH COMPACTED FILL MATERIAL OR CONTROLLED LOW-STRENGTH MATERIAL PER THE CONSTRUCTION DOCUMENTS.
7. FOUNDATIONS BELOW GRADE SHALL BE FORMED UNLESS WRITTEN DOCUMENTATION PERMITTING UNFORMED FOOTINGS IS OBTAINED FROM THE SPECIAL INSPECTOR/GEOTECHNICAL ENGINEER. FORWARD WRITTEN DOCUMENTATION TO THE STRUCTURAL ENGINEER FOR REVIEW PRIOR TO THE START OF FOUNDATION EXCAVATIONS. THE SIDES OF UNFORMED FOUNDATION EXCAVATIONS MUST BE ABLE TO STAND WITHOUT CAVING OR SLOUGHING. PROVIDE FORMS OR PROTECTION AS REQUIRED TO PREVENT SLOUGHING OF SOIL INTO EXCAVATIONS. WHERE UNFORMED FOUNDATIONS ARE USED, COORDINATE AND COMPLY WITH THE CONCRETE PROTECTION REQUIREMENTS FOR REINFORCEMENT PLACED ADJACENT TO EARTH. FOUNDATIONS ABOVE GRADE SHALL BE FORMED. ALL FORMS SHALL BE REMOVED ABOVE OR BELOW GRADE, UNLESS OTHERWISE NOTED. VOIDS BETWEEN FORMED FOUNDATIONS AND EXCAVATIONS SHALL BE FILLED WITH CLSM.
8. THE TOP SURFACE OF FOUNDATIONS SHALL BE LEVEL. THE BOTTOM SURFACE OF FOUNDATIONS IS PERMITTED TO HAVE A SLOPE NOT EXCEEDING ONE UNIT VERTICAL IN TEN UNITS HORIZONTAL. FOOTINGS SHALL BE STEPPED WHERE IT IS NECESSARY TO CHANGE THE ELEVATION OF THE TOP SURFACE OF THE FOOTING OR WHERE THE SURFACE OF THE GROUND AND/OR BOTTOM SURFACE OF THE FOOTINGS SLOPES MORE THAN ONE UNIT VERTICAL IN TEN UNITS HORIZONTAL. STEP FOOTINGS AS REQUIRED PER TYPICAL DETAILS.
9. THE TOP OF EXTERIOR FOOTINGS SHALL BE LOCATED 4 INCHES MINIMUM BELOW LOWEST ADJACENT EXTERIOR FINISHED GRADE OR SURFACE, UNLESS OTHERWISE NOTED. WHERE ADJACENT EXTERIOR FINISHED GRADE OR SURFACE SLOPES DOWN AND AWAY FROM THE FOUNDATION, THE TOP OF EXTERIOR FOOTINGS SHALL BE NO HIGHER THAN THE ELEVATION OF THE FINISHED GRADE OR SURFACE LOCATED 18 INCHES FROM THE FACE OF SUCH FOOTING, UNLESS OTHERWISE NOTED. STEP FOOTINGS AS REQUIRED PER TYPICAL DETAILS TO OBTAIN THE MINIMUM DIMENSIONS REQUIRED.
10. FOUNDATION DEPTHS SHOWN ON THE CONSTRUCTION DOCUMENTS ARE MINIMUM DEPTHS ONLY AND DO NOT NECESSARILY ACCOUNT FOR ALL PIPES, CONDUITS, UTILITIES AND TRENCHES ADJACENT TO OR CROSSING FOOTINGS AS REQUIRED BY ALL OTHER CONSTRUCTION DOCUMENTS. STEP FOOTINGS TO COMPLY WITH THE REQUIREMENTS OF TYPICAL DETAILS FOR PIPES AND CONDUITS AT FOOTINGS.
11. FOR DAMP-PROOFING, WATER-PROOFING AND DRAINAGE SYSTEMS ADJACENT TO FOUNDATIONS, SEE ALL OTHER CONSTRUCTION DOCUMENTS.
12. FOUNDATION ELEMENTS SHOWN ARE INDICATED IN THEIR COMPLETED LOCATION AND CONDITION. FILL AROUND FOUNDATION ELEMENTS SHALL BE PLACED IN LIFTS AND COMPACTED IN A MANNER THAT DOES NOT DAMAGE OR MOVE THE FOUNDATION, WATER-PROOFING OR DAMP-PROOFING. SHORE AND ADEQUATELY SUPPORT FOUNDATION ELEMENTS WHILE PLACING FILL UNTIL THE FOUNDATION ELEMENTS AND THEIR SUPPORTING STRUCTURAL ELEMENTS HAVE BEEN COMPLETED AND ATTAINED THEIR REQUIRED DESIGN STRENGTHS.
13. FOUNDATION EXCAVATIONS SHALL BE CLEANED OF DEBRIS, LOOSE SOIL AND STANDING WATER DURING CONSTRUCTION AND IMMEDIATELY PRIOR TO CONCRETE PLACEMENT. PROVIDE FOR DE-WATERING IF WATER IS PRESENT IN THE EXCAVATIONS DUE TO ANY SOURCE.
14. FOUNDATION EXCAVATIONS SHALL BE MADE TO THE SIZES AND SHAPES REQUIRED BY THE CONSTRUCTION DOCUMENTS. NO MATERIAL IS TO BE EXCAVATED UNNECESSARILY.
15. EXTERIOR FINISHED GRADES OR SURFACES SHALL HAVE POSITIVE DRAINAGE AWAY FROM FOUNDATIONS. GROUND SURFACES WITHIN TEN FEET OF THE BUILDING FOUNDATION SHALL BE SLOPED A MINIMUM OF 5%. PAVED SURFACES WITHIN TEN FEET OF THE BUILDING FOUNDATION SHALL BE SLOPED A MINIMUM OF 2%. PLANTERS SHALL HAVE ADEQUATE SURFACE DRAINAGE TO PREVENT STANDING WATER ADJACENT TO THE FOUNDATIONS.
16. WHERE EXCAVATIONS OCCUR ADJACENT TO EXISTING STRUCTURES, PROVIDE ADEQUATE UNDERPINNING, SHORING OR SUPPORT TO PREVENT SETTLEMENT AND LATERAL MOVEMENT OF THE EXISTING FOUNDATIONS. FOUNDATIONS ADJACENT TO EXISTING FOUNDATIONS SHALL PENETRATE A MINIMUM OF THE SAME DEPTH AS EXISTING, UNLESS OTHERWISE NOTED.
17. FOUNDATION SIZES SHALL BE AS REQUIRED ON THE CONSTRUCTION DOCUMENTS. THE MINIMUM DEPTH NOTED SHALL BE BELOW THE ADJACENT UNDISTURBED GROUND SURFACE. THE MINIMUM DEPTH SHALL ALSO EXTEND BELOW THE FROST LINE OF THE LOCALITY. FOOTINGS SHALL NOT BEAR ON FROZEN SOIL.

REINFORCED CONCRETE

S- 033000 N002A
180809. Q2

1. CONCRETE MATERIALS, QUALITY CONTROL AND CONSTRUCTION SHALL BE IN ACCORDANCE WITH ACI 318.
   - SEE CONCRETE MIX DESIGN TABLE FOR REQUIRED CONCRETE PROPERTIES.
2. PORTLAND CEMENT SHALL CONFORM TO ASTM C150, TYPE II.
3. AGGREGATES SHALL CONFORM TO ASTM C33 FOR NORMAL-WEIGHT AND ASTM C330 FOR LIGHTWEIGHT CONCRETE. MAXIMUM AGGREGATE SIZE USED IN MIXES SHALL BE APPROPRIATE FOR FORM AND REBAR CLEARANCES TO BE ENCOUNTERED.
4. REINFORCING STEEL SHALL CONFORM TO ASTM A706, GRADE 60, OR ASTM A615, GRADE 60.
5. REINFORCING STEEL TO BE WELDED SHALL CONFORM TO ASTM A706, GRADE 60. WELD FILLER METAL FOR REINFORCING STEEL SHALL COMPLY WITH AWS D1.4, Fu=80 KSI. WELDING SHALL CONFORM WITH AWS D1.4.
6. WELDED WIRE REINFORCEMENT SHALL BE COMPOSED OF FLAT SHEETS AND CONFORM TO ASTM A1064.
7. DIMENSIONS LOCATING REINFORCING STEEL ARE TO THE FACE OF REINFORCING STEEL AND DENOTE CLEAR COVERAGE. MINIMUM CONCRETE COVER SHALL BE AS FOLLOWS, UNO:
   A. CONCRETE CAST AGAINST EARTH (EXCEPT SLAB ON GRADE) - 3"
      - SLAB ON GRADE - CENTER REINF IN SLAB, UNO
   B. CONCRETE FORMED & EXPOSED TO EARTH OR WEATHER:
      - #6 THRU #18 BARS - 2"
      - #5 BAR, W31 OR D31 WIRE, & SMALLER - 1 1/2"
   C. CONCRETE NOT EXPOSED TO WEATHER OR IN CONTACT WITH THE GROUND:
      - BEAMS & COLUMNS - 1 1/2"
      - SLABS & WALLS: #14 & #18 BARS - 1 1/2", #11 BAR & SMALLER - 3/4"
8. SPLICES IN CONTINUOUS REINFORCING SHALL BE LAPPED AS NOTED IN THE TYPICAL DETAIL, UNO. SPLICES IN ADJACENT BARS SHALL BE STAGGERED SO THERE IS NO OVERLAP. LAP SPLICES OF #14 & #18 REBAR IS NOT PERMITTED AND BARS SHALL BE CONTINUOUS ONE PIECE FOR THE FULL LENGTH SHOWN. LAP SPLICES OF REBAR IN A BUNDLE SHALL BE EQUAL TO THE LAP SPLICE LENGTH REQUIRED FOR THE INDIVIDUAL BARS WITHIN THE BUNDLE MULTIPLIED BY 1.33. INDIVIDUAL BAR SPLICES WITHIN A BUNDLE SHALL NOT OVERLAP. ENTIRE BUNDLES SHALL NOT BE LAP SPLICED.
9. UNLESS DETAILED OTHERWISE: REINFORCING IN CONTINUOUS BEAMS AND SPANDRELS SHALL HAVE THE TOP BARS SPLICED AT MID-SPAN AND THE BOTTOM BARS SPLICED AT THE CENTERLINE OF SUPPORTS. REINFORCING IN CONTINUOUS SOIL-BEARING GRADE BEAMS OR FOOTINGS SHALL HAVE THE TOP BARS SPLICED AT CENTERLINE OF COLUMN SUPPORTS AND THE BOTTOM BARS SPLICED AT MID-SPAN. AT DISCONTINUOUS ENDS, THE BARS SHALL BE TERMINATED WITH A STANDARD HOOK EXTENDED TO THE FAR FACE OF THE SUPPORT OR BEAM.
10. PROVIDE FOUNDATION DOWELS TO MATCH GRADE, QUANTITY, SIZE & SPACING OF WALL/COLUMN REINFORCEMENT. EXTEND DOWELS INTO FOOTINGS AND TERMINATE WITH A STANDARD HOOK 3" ABOVE BOTTOM OF FOOTING, UNO. PROVIDE STANDARD LAP AT DOWELS TO EACH WALL/COLUMN REBAR.
11. HOOKS SHALL BE STANDARD HOOKS, UNO.
12. ITEMS TO BE EMBEDDED IN CONCRETE, SUCH AS REINFORCING, DOWELS, BOLTS, ANCHORS, SLEEVES, ETC SHALL BE SECURELY TIED AND SUPPORTED PRIOR TO PLACING CONCRETE.
13. THE LOCATION OF SLAB ON GRADE JOINTS SHALL BE AS INDICATED ON THE DRAWINGS. SLAB ON GRADE JOINT SPACINGS ARE NOT TO EXCEED 12'-0" IN EITHER DIRECTION, UNO. SUBMIT LOCATION PLAN FOR ALL PROPOSED JOINTS FOR REVIEW.
14. SURFACE OF CONSTRUCTION JOINTS SHALL BE CLEANED AND LAITANCE REMOVED. IMMEDIATELY BEFORE CONCRETE IS PLACED, CONSTRUCTION JOINTS SHALL BE WETTED AND STANDING WATER REMOVED. CONSTRUCTION JOINT SURFACES SHALL BE ROUGHENED TO A 1/4" MINIMUM AMPLITUDE, UNO.
15. FORM 3/4" CHAMFER AT ALL EXPOSED WALL AND COLUMN EDGES AND CORNERS, UNO.
16. EXTERIOR SLABS INCLUDING SIDEWALKS SHALL BE 4" MIN THICKNESS AND HAVE 6x6-W1.4xW1.4 WWR IN CENTER OF SLAB, UNO.
17. NO CONDUIT, PIPE, OR SLEEVES LARGER THAN 1" OD SHALL BE PLACED IN OR THROUGH CONCRETE BEAMS OR SLABS UNLESS SPECIFICALLY DETAILED AND APPROVED BY THE STRUCTURAL ENGINEER. CONDUIT OR PIPES 1" OD AND SMALLER SHALL BE SPACED & POSITIONED SUCH THAT THE EFFECTIVENESS OF THE REBAR IS NOT REDUCED.

CONCRETE MIX DESIGN

S- 033000 N002B
190225. Q2

MIX DESIGN TABLE

LOCATION	REQ SCM (% BY WEIGHT OF TOTAL CEMENTITIOUS MATERIALS)	REQ EARLY COMPRESSIVE STRENGH (PSI)	REQ [28] DAY COMPRESSIVE STRENGH (PSI)	AIR CONTENT	MAX W/C RATIO	MAX AIR-DRY WEIGHT (LBS/FT³)	ACI EXPOSURE CLASS
BELOW GRADE CONCRETE (FTGS, PIERS, GRADE BEAMS)	15	2500 PRIOR TO LOADING	4000	NONE	0.50	145	F0, S0, W0, C1
SLAB ON GRADE AND BUILDING CURBS	15	-	4000	NONE*	0.45	145	F0, S0, W0, C1

* 3 PERCENT MAX AIR AT STEEL TROWELED CONCRETE UNLESS CONTRACTOR CAN ASSURE THAT DELAMINATION WILL NOT OCCUR. PROTECT SLABS FROM FREEZE-THAW UNTIL SPACE IS CONDITIONED IF AIR CONTENT IS LESS THAN 4.5 PERCENT.

CONTROLLED LOW STRENGTH MATERIAL (CLSM)

S- 033000 N004A
200203. Q2

1. CLSM SHALL HAVE A 28-DAY COMPRESSIVE STRENGTH BETWEEN 50 PSI AND 150 PSI AS TESTED PER ASTM D4832 TYP, UNO
2. CLSM MATERIALS SHALL MEET THE RECOMMENDATIONS OF ACI 229R.
3. CLSM SHALL HAVE A MINIMUM SLUMP OF 10".
4. TESTING LAB SHALL FIELD VERIFY STRENGTH OF CLSM, WITH A MINIMUM FREQUENCY OF ONE TEST PER DAY.

IDENTIFICATION STAMP
DIV. OF THE STATE ARCHITECT
APP: 02-118630 INC:
REVIEWED FOR
SS ☐ FLS ☐ ACS ☑
DATE: 04/13/2021

OFFICE OF THE STATE FIRE MARSHAL
APPROVED FIRE AND PANIC ONLY
Approval of this plan does not authorize or approve any omission or deviation from applicable regulations. Final approval is subject to field inspection. One set of approved plans shall be available on the project site at all times.
PERMIT NO.: 20-N-2332-CP
REVIEWED BY: LITO CATAYLO, OSFM
DATE: 4/ 1 /2021

GENERAL SERVICES
Department of General Services
State of California
Real Estate Services Division
Project Management & Development Branch
707 Third Street, Suite 4-105
West Sacramento, California 95605

NICHOLS MELBURG & ROSSETTO
ARCHITECTS + ENGINEERS
300 Knollcrest Drive
Redding, CA. 96002
(530) 222-3300 (530) 222-3538 FAX
http://www.nmrdesign.com

Copyright © 2021
All ideas, designs, arrangements and plans indicated or represented by this drawing are owned by, and the property of, NICHOLS, MELBURG and ROSSETTO and were created, evolved and developed for use on, and in conjunction with, the specified project. None of such ideas, designs, arrangements or plans shall be used by, or disclosed to any person, firm or corporation for any purpose whatsoever without the written permission of NICHOLS, MELBURG and ROSSETTO.

LICENSE STAMPS
REGISTERED PROFESSIONAL ENGINEER
DARRON E. HUNTINGDALE
No. S4788
STRUCTURAL
STATE OF CALIFORNIA
3/19/2021

STRUCTURAL CONSULTANT
LIONAKIS
1919 Nineteenth Street
Sacramento CA 95811
P 916.558.1900 F 916.558.1919
www.lionakis.com

DRAWING STATUS
CONSTRUCTION DOCUMENTS

ISSUE

No.	Date	Description
1	10/22/2020	INITIAL PLAN REVIEW
2	01/08/2021	AGENCY RESUBMITTAL
3	03/22/2021	AGENCY RESUBMITTAL

If drawing is not 30" x 42" it is a reduced print

PROJECT
RESIDENTIAL CENTER, UKIAH: REPLACEMENT OF EXISTING RESIDENTIAL CENTER
440 EAST HILL ROAD
WILLITS, CALIFORNIA 95490
MENDOCINO COUNTY
CALIFORNIA CONSERVATION CORP

Supervisor	Designed	Drawn
		Author

DSA Application No.
02-118630

SHEET TITLE
TYPICAL NOTES

DGS Project Number: 000000000001826
Lionakis Project Number: 018322

Reference North: NORTH

Sheet Scale: 1" = 1'-0"

Sheet Number: S011

ISSUE DATE
July 9, 2021

Plot Date: 3/19/2021 11:19:38 AM
File Name: BIM 360://CCC Willits Residential Center/018322_S-MASTER_R18_CENTRAL.rvt

ROUGH CARPENTRY

S- 061100 N003A
170125. Q2

1. SAWN LUMBER FRAMING SHALL BE INDENTIFIED BY THE GRADE MARK OF AN APPROVED LUMBER GRADING OR INSPECTION AGENCY IN CONFORMANCE WITH DOC PS-20. EACH PIECE OF FRAMING SHALL BE IDENTIFIED BY THE GRADE MARK SIGNIFYING CONFORMANCE WITH THE SPECIES, GRADE, SIZE AND SEASONING PROVISIONS. FRAMING LUMBER SHALL HAVE A MAXIMUM MOISTURE CONTENT OF 19% WHEN INSTALLED. FRAMING 4X AND LARGER SHALL BE FREE OF HEART CENTER. SPECIES SHALL BE DOUGLAS FIR-LARCH, AT EXTERIOR EXPOSED CONDITIONS PROVIDE ALASKAN YELLOW CEDAR (AYC) WITH THE FOLLOWING MINIMUM GRADES UNO:
   2X & 3X FRAMING NO. 2
   4X FRAMING NO. 1
   6X AND LARGER FRAMING NO. 1
2. WOOD STRUCTURAL PANELS SHALL CONFORM TO THE REQUIREMENTS FOR THEIR TYPE. PLYWOOD PANELS SHALL CONFORM TO THE REQUIREMENTS OF DOC PS-1. WOOD-BASED STRUCTURAL-USE PANELS SHALL CONFORM TO THE REQUIREMENTS OF DOC PS-2. EACH PANEL SHALL BE IDENTIFIED FOR GRADE AND ADHESIVE BOND CLASSIFICATION TYPE BY THE TRADEMARKS OF AN APPROVED TESTING AND GRADING AGENCY. EACH PANEL SHALL BEAR A "SIZED FOR SPACING" MARK. PANEL SPAN INDEX AND THICKNESS SHALL BE AS INDICATED FOR THE INSTALLED LOCATION.
3. WOOD STRUCTURAL PANELS PERMANENTLY EXPOSED IN OUTDOOR APPLICATIONS SHALL HAVE AN EXTERIOR ADHESIVE BOND CLASSIFICATION. ROOF SHEATHING PERMANENTLY EXPOSED TO THE OUTDOORS ONLY ON THE UNDERSIDE OF PROTECTED OVERHANGS IS PERMITTED TO HAVE AN EXPOSURE 1 ADHESIVE BOND CLASSIFICATION. WOOD STRUCTURAL PANELS FOR ALL OTHER USES SHALL HAVE AN EXPOSURE 1 ADHESIVE BOND CLASSIFICATION, UNO.
4. PRESERVATIVE-TREATED WOOD PRODUCTS SHALL CONFORM TO THE REQUIREMENTS OF AWPA STANDARD U1. EACH PIECE SHALL BEAR AN AWPA QUALITY MARK OF AN ALSC APPROVED INSPECTION AGENCY. CARE FOR PRODUCTS SHALL CONFORM TO THE REQUIREMENTS OF AWPA STANDARD M4. UNTREATED SURFACES EXPOSED BY DAMAGE OR FIELD FABRICATION SHALL BE FIELD TREATED. PRODUCTS SHALL HAVE A MAXIMUM MOISTURE CONTENT OF 19% WHEN INSTALLED.
5. PRESERVATIVE-TREATED WOOD PRODUCTS SHALL BE USED FOR STRUCTURAL MEMBERS (ALL FRAMING AND STRUCTURAL PANELS) AT THE FOLLOWING LOCATIONS, UNO:
   - ALL FLOOR FRAMING AND STRUCTURAL PANELS WHEN JOISTS OR PANELS ARE LESS THAN 18", OR GIRDERS ARE LESS THAN 12" TO EXPOSED EARTH IN UNDER-FLOOR SPACES LOCATED WITHIN THE BUILDING FOUNDATION PERIMETER
   - MEMBERS SUPPORTED BY EXTERIOR FOUNDATIONS AND LESS THAN 8" FROM EXPOSED EARTH
   - MEMBERS IN CONTACT WITH EXTERIOR OR BELOW GRADE CONCRETE OR MASONRY WALLS
   - MEMBERS IN CONTACT WITH CONCRETE OR MASONRY SLABS ON GRADE OR FOOTINGS
   - MEMBERS SUPPORTING EXTERIOR WOOD SIDING THAT IS LESS THAN 6" FROM EXPOSED EARTH OR LESS THAN 2" FROM HORIZONTAL CONCRETE OR MASONRY SURFACES
   - MEMBERS PERMANENTLY EXPOSED TO WEATHER AND NOT FULLY PROTECTED
   - MEMBERS IN CONTACT WITH EARTH
6. THE INSTALLATION OF FASTENERS SHALL BE IN ACCORDANCE WITH THE NATIONAL DESIGN SPECIFICATION (NDS) FOR WOOD CONSTRUCTION. THE NUMBER AND SIZE OF FASTENERS CONNECTING WOOD MEMBERS SHALL NOT BE LESS THAN SPECIFIED IN THE BUILDING CODE, UNO. FASTENER MATERIALS SHALL COMPLY WITH THE BENDING YIELD STRENGTHS LISTED IN NDS APPENDIX I. FASTENERS SHALL BE TIGHTENED ON INSTALLATION & RETIGHTENED JUST PRIOR TO CLOSING IN.
7. FASTENERS AND WOOD CONSTRUCTION CONNECTORS (PREMANUFACTURED OR AS INDICATED) THAT ARE: PERMANENTLY EXPOSED TO WEATHER, IN CONTACT WITH PRESERVATIVE-TREATED WOOD OR IN CONTACT WITH FIRE-RETARDANT-TREATED WOOD SHALL BE HOT-DIPPED, ZINC-COATED GALVANIZED STEEL OR STAINLESS STEEL. THE COATING WEIGHTS FOR ZINC-COATED FASTENERS SHALL BE IN ACCORDANCE WITH ASTM A153. FASTENERS OTHER THAN NAILS, WOOD SCREWS AND LAG SCREWS SHALL BE PERMITTED TO BE OF MECHANICALLY DEPOSITED ZINC-COATED STEEL WITH COATING WEIGHTS IN ACCORDANCE WITH ASTM B695, CLASS 55 MINIMUM.
8. NAILS SHALL CONFORM TO THE REQUIREMENTS OF ASTM F1667 INCLUDING THE NAIL BENDING YIELD STRENGTHS OF SUPPLEMENTARY REQUIREMENT S1. NAILS SHALL BE STEEL WIRE COMMON NAILS UNO, OF THE SIZE INDICATED. INSTALL NAILS SUCH THAT END DISTANCES, EDGE DISTANCES AND SPACINGS ARE SUFFICIENT TO PREVENT SPLITTING OF THE WOOD. PREDRILL NAIL HOLES IN WOOD MEMBERS EQUAL TO 75% OF NAIL DIAMETER WHEN NECESSARY TO PREVENT SPLITTING.
9. WOOD SCREWS SHALL CONFORM TO ANSI/ASME STANDARD B18.6.1. SCREWS SHALL BE MADE FROM HEAT TREATED CARBON STEEL WIRE WITH HEADS, LENGTHS AND SIZES AS INDICATED. SCREWS SHALL BE SELF DRILLING. INSTALL SCREWS SUCH THAT END DISTANCES, EDGE DISTANCES AND SPACINGS ARE SUFFICIENT TO PREVENT SPLITTING OF THE WOOD.
10. LAG SCREWS SHALL CONFORM TO ANSI/ASME STANDARD B18.2.1. LAG SCREWS SHALL HAVE HEX HEADS AND CONFORM TO THE MATERIAL REQUIREMENTS OF ASTM A307, GRADE A. LAG SCREW SHANK AND THREADS SHALL BE THE SAME FULL BODY DIAMETER SPECIFIED.
11. BOLTS SHALL CONFORM TO ANSI/ASME STANDARD B18.2.1. BOLTS SHALL HAVE HEX HEADS AND CONFORM TO ASTM A307, GRADE A. PROVIDE HEX NUTS AT BOLTS THAT CONFORM TO ASTM A563, GRADE A. BOLT SHANK AND THREADS SHALL BE THE SAME FULL BODY DIAMETER SPECIFIED.
12. BOLTS AND LAG SCREWS SHALL BE PROVIDED WITH A STANDARD CUT WASHER UNDER HEADS AND NUTS WHICH BEAR ON WOOD, UNO. SEE ROUGH CARPENTRY WASHER SCHEDULE FOR SIZE, OF PLATE OR MALLEABLE IRON WASHERS WHERE REQD. WHERE BOLT OR LAG SCREW SPACING CAUSES WASHERS TO OVERLAP, PROVIDE A CONTINUOUS PLATE WASHER (ONE PIECE) THAT MATCHES WIDTH, THICKNESS AND HOLE DIAMETER SHOWN IN WASHER SCHEDULE.
13. PREDRILL HOLES IN WOOD MEMBERS FOR BOLTS AND LAG SCREWS. BOLT HOLES SHALL BE 1/16" LARGER THAN THE BOLT DIAMETER FOR THE FULL DEPTH OF BOLT. LAG SCREW HOLES SHALL BE THE SAME DIAMETER & DEPTH AS THE UNTHREADED LAG SCREW SHANK. PROVIDE HOLES EQUAL TO 50% OF FASTENER DIAMETER FOR THE THREADED PORTION OF LAG SCREWS. HOLES SHALL BE PERPENDICULAR, UNO, TO CONNECTED SURFACES AND ACCURATELY ALIGNED IN MAIN MEMBERS AND SIDEPLATES. FASTENERS SHALL NOT BE FORCIBLY DRIVEN.
14. INSTALL BOLTS AND LAG SCREWS SUCH THAT END DISTANCES, EDGE DISTANCES AND SPACINGS ARE SUFFICIENT TO PREVENT SPLITTING OF THE WOOD. SPACE BOLTS AND LAG SCREWS FOUR DIAMETERS CENTER TO CENTER, FOUR DIAMETERS FROM WOOD EDGES, EIGHT DIAMETERS FROM WOOD ENDS AND TWO DIAMETERS FROM STEEL SIDE PLATE EDGES OR ENDS, UNO.
15. PREFABRICATED WOOD CONSTRUCTION CONNECTORS INDICATED IN THE DRAWINGS ARE PER THE LATEST EDITION OF THE "WOOD CONSTRUCTION CONNECTORS" CATALOG BY THE SIMPSON STRONG-TIE COMPANY INC. CONNECTORS USED MUST BE LISTED IN A CURRENT AND VALID EVALUATION REPORT BY AN EVALUATION AGENCY RECOGNIZED BY THE ENFORCEMENT AGENCY. EACH CONNECTOR SHALL BE IDENTIFIED BY A FACTORY APPLIED MANUFACTURER'S STAMP. INSTALL CONNECTORS AND REQUIRED FASTENERS PER INSTRUCTIONS IN THE CATALOG AND REPORTS BEFORE LOADING THE CONNECTION. USE THE SPECIFIED FASTENER TYPE, SIZE, MATERIAL, FINISH AND QUANTITY, FILLING ALL FASTENER HOLES WITHOUT OVERDRIVING OR UNDERDRIVING THE FASTENER. ONLY BEND CONNECTORS ONCE THAT ARE SPECIFICALLY DESIGNED TO BE BENT. DO NOT BEND OR MODIFY CONNECTORS UNLESS SPECIFICALLY SHOWN.
16. HANGERS SHALL BE INSTALLED AT ALL BEAMS, RAFTERS AND JOISTS THAT DO NOT BEAR DIRECTLY ON A SUPPORTING WALL OR BEAM. HANGERS SHALL MATCH THE MEMBER SIZE, SLOPE AND SKEW, UNO. PROVIDE HANGERS WITH STRAIGHT OR CONCEALED FLANGES AS NECESSARY SO THAT FLANGE NAILS ARE PLACED INTO SIDE GRAIN OF CARRYING MEMBER. HANGERS AT 2X AND 3X FRAMING SHALL BE "SIMPSON" LUS AND HANGERS AT 4X AND LARGER FRAMING SHALL BE "SIMPSON" HU-TYPE, UNO.
17. POSTS IN STUD WALLS SHALL HAVE FRAMING ANGLES EACH SIDE AT TOP AND BOTTOM TO PLATES UNO. POSTS SUPPORTING OR SUPPORTED BY BEAMS SHALL HAVE MATCHING SIZE "SIMPSON" PC OR EPC POST CAPS, UNO. POSTS BEARING ON CONCRETE SHALL HAVE MATCHING SIZE "SIMPSON" ABU POST BASE, UNO.
    A. FRAMING ANGLES SHALL BE BY "SIMPSON" AND OF THE FOLLOWING MINIMUM SIZES, UNO. INSTALL "A" ANGLES WITH 8D X 1 1/2" NAILS AND "LS" ANGLES WITH 10D X 1 1/2" NAILS.

NOMINAL FRAMING DEPTH/WIDTH	"SIMPSON" FRAMING ANGLE
4"	A34 OR LS30
6"	A35 OR LS50
8"	LS70
10" AND 12"	LS90

18. BEAMS, RAFTERS AND JOISTS SHALL BE BRACED AT ENDS AND AT POINTS OF SUPPORT TO PREVENT ROTATION AND/OR LATERAL DISPLACEMENT. BRACING SHALL BE BY 2X FULL DEPTH SOLID BLOCKING BETWEEN EACH MEMBER, BY CONNECTION TO A CONTINUOUS 2X MINIMUM FULL DEPTH SOLID BAND, RIM OR LEDGER MEMBER, OR BY PREFABRICATED FACE MOUNT HANGERS.
19. RAFTERS AND JOISTS OVER 10 INCH NOMINAL DEPTH SHALL BE BRACED BETWEEN ENDS AND BETWEEN POINTS OF SUPPORT TO PREVENT ROTATION AND/OR LATERAL DISPLACEMENT. BRACING SHALL BE BY 2X FULL DEPTH SOLID BLOCKING BETWEEN EACH MEMBER OR BY PREFABRICATED METAL BRIDGING INSTALLED BETWEEN EACH MEMBER SPACED AT INTERVALS NOT EXCEEDING 8'-0".
20. STUD WALLS SHALL BE BRACED BY MINIMUM 2X STUD DEPTH SOLID BLOCKING BETWEEN EACH STUD SPACED VERTICALLY AS FOLLOWS: AT 8'-0" OC MAXIMUM, AT EACH SP EDGE JOINT, AND AT 6'-0" OC MAXIMUM FOR WALLS WITHOUT SP OR GYPSUM BOARD APPLIED ON AT LEAST ONE FACE OF STUD.
21. HOLES REQUIRED FOR PASSING STRAPS OR HARDWARE THROUGH SP SHALL BE NEATLY DRILLED ROUND HOLES OR NEATLY SLOTTED HOLES. DO NOT OVERCUT. THE DIMENSION OF HOLES OR SLOTS SHALL NOT EXCEED THE STRAP OR HARDWARE DIMENSION BY MORE THAN 1/4 INCH.
22. HOLES OR NOTCHES IN ANY MEMBERS SHALL COMPLY WITH TYPICAL DETAILS UNLESS SPECIFICALLY SHOWN OTHERWISE.
23. BLOCKING SHOWN ON THE STRUCTURAL DRAWINGS IS FOR STRUCTURAL PURPOSES ONLY. SEE ALL OTHER DRAWINGS AND SPECIFICATIONS FOR ADDITIONAL BLOCKING REQUIRED FOR FINISHES, FIRE AND DRAFT STOPS, THE ATTACHMENT OF NONSTRUCTURAL ITEMS, OR ANY OTHER REASON.
24. FRAMING MEMBERS (INCLUDING BLOCKING) SHALL BE CUT TO PROVIDE TIGHT FIT AND FULL BEARING AT ALL CONTACT SURFACES. CUT MEMBERS TO MATCH SIZE, DEPTH, SLOPE OR ANGLE SHOWN WHERE SHAPED SURFACES OR NOTCHES ARE INDICATED. DO NOT OVERCUT.

WASHER SCHEDULE FOR BOLTS & LAG SCREWS IN WOOD

BOLT OR LAG DIA	STEEL PLATE WASHER SIZE & HOLE DIA AT CL	MALLEABLE IRON WASHER (ASTM A47)
1/2"	.229" x 3" SQ W/ 9/16" DIA HOLE	1/4" x 2 1/2" DIA
5/8"	.229" x 3" SQ W/ 11/16" DIA HOLE	5/16" x 2 3/4" DIA
3/4"	.229" x 3" SQ W/ 13/16" DIA HOLE	7/16" x 3" DIA
7/8"	5/16" x 3" SQ W/ 15/16" DIA HOLE	7/16" x 3 1/2" DIA
1"	3/8" x 3 1/2" SQ W/ 1 1/16" DIA HOLE	1/2" x 4" DIA

CARPENTRY NAILING SCHEDULE

S- 061100 N004A
170126. Q2

NAILING SCHEDULE (UNO)

CONNECTION / MEMBERS	FASTENING	LOCATION
JOISTS, RAFTERS, TIES, STRUTS, BRACES		
LAPS TO SIDES OF OTHER MEMBERS FOR EACH 2" OF THE DEEPEST MEMBER DEPTH	(1) 16D	FACE NAIL
TO PERPENDICULAR BEARINGS FOR EACH 2" OF BEARING LENGTH	(2) 8D	TOE NAIL STAG
TO PARALLEL BEARINGS	8D @ 6" OC	TOE NAIL STAG
DOUBLE MEMBERS FOR EACH 4" OF MEMBER DEPTH	(1) 16D @ 16" OC	FACE NAIL
TO RIMS, BANDS, HIPS, OR RIDGES TO 2x - FOR EACH 2" OF MEMBER DEPTH TO 3x OR GREATER - FOR EA 2" OF MEMBER DEPTH	(1) 16D (2) 8D	END NAIL TOE NAIL STAG
DOUBLE TOP PLATES		
UPPER TO LOWER PLATE FOR EACH 2" OF PLATE WIDTH AT EA LAP SPLICE AT INTERSECTIONS - FOR EA 2" OF PLATE WIDTH	(1) 16D @ 16" OC (8) 16D (1) 16D	FACE NAIL FACE NAIL FACE NAIL
STUDS		
TO TOP PLATES, SILL & SOLE PLATES OR BEAMS TO 2x - FOR EA 2" OF STUD WIDTH TO 3x OR GREATER - FOR EACH 2" OF STUD WIDTH DOUBLE STUDS OR STUD LAP TO POST FOR EACH 4" OF STUD WIDTH	(1) 16D OR (2) 8D (2) 8D (1) 16D @ 16" OC	END NAIL TOE NAIL TOE NAIL FACE NAIL
SILL & SOLE PLATES		
TO PERPENDICULAR FRAMING OR BLOCKING FOR EACH 2" OF PLATE WIDTH TO PARALLEL FRAMING OR BLOCKING	(1) 16D 16D @ 6" OC	FACE NAIL FACE NAIL
BLOCKING		
TO SIDES OF JOIST, RAFTERS OR STUDS FOR EACH 4" OF BLOCKING DEPTH/WIDTH TO PERPENDICULAR BEARINGS FOR EACH 2" OF BEARING LENGTH TO PARALLEL BEARINGS	(2) 8D (2) 8D 8D @ 6" OC ((3) MIN)	TOE NAIL STAG TOE NAIL STAG TOE NAIL STAG
LEDGERS		
TO STUDS - FOR EA 2" OF LEDGER DEPTH TO PARALLEL BLOCKING OR FRAMING	(1) 16D 16D @ 6" OC	FACE NAIL FACE NAIL
BEAMS 4x AND LARGER		
TO KING STUD - FOR EA 2" OF BEAM DEPTH TO BEARINGS - FOR EACH 2" OF BEARING LENGTH	(2) 16D (2) 16D	END NAIL TOE NAIL STAG
POSTS 4x AND LARGER		
TO TOP PLATES, SILL & SOLE PLATES OR BEAMS TO 2x - FOR EACH 2" OF POST WIDTH TO 3x OR GREATER - FOR EACH 2" OF POST WIDTH	(2) 16D (2) 16D	END NAIL TOE NAIL STAG

NOTES:
CONDITIONS SHOWN ARE FOR COMMON NAILS AT 2X FRAMING, UNO. WHERE 3x FRAMING OCCURS USE 40D BOX NAILS INSTEAD OF 16D COMMONS AT NOTED FACE NAIL CONNECTIONS.

GLUED-LAMINATED TIMBER

S- 061800 N001A
190225. Q2

1. GLUED-LAMINATED TIMBERS SHALL BE MANUFACTURED AND IDENTIFIED IN CONFORMANCE WITH AITC A190.1 & ASTM D3737.
2. DESIGN IS FOR DRY CONDITIONS OF USE, BUT ADHESIVE USED SHALL BE FOR WET CONDITIONS OF USE PER AITC A190.1.
3. DESIGN IS FOR SERVICE TEMPERATURES LESS THAN 150° F.
4. APPEARANCE SHALL BE INDUSTRIAL GRADE, UNO.
5. EACH MEMBER SHALL BE INDIVIDUALLY WRAPPED DURING SHIPPING AND FIELD HANDLING PER AITC 111.
6. SUBMIT FABRICATION AND INSTALLATION DRAWINGS FOR REVIEW PRIOR TO FABRICATION.
7. MANUFACTURE FROM SPECIES & GRADES OF LUMBER WHICH WILL PRODUCE DESIGN VALUES EQUAL TO OR EXCEEDING THE FOLLOWING WHEN LOADED PERPENDICULAR TO THE WIDE FACES OF THE LAMINATIONS:
   INTERIOR LOCATIONS AND EXTERIOR PROTECTED LOCATIONS
   - SIMPLE SPAN BEAMS: 24F-V4 DF/DF
     BENDING (Fb) = 2400 PSI (TENSION ZONE)
     BENDING (Fb) = 1850 PSI (COMPRESSION ZONE)
     SHEAR PARALLEL TO GRAIN (Fv) = 240 PSI
     MODULUS OF ELASTICITY (E) = 1,800,000 PSI
   - CANTILEVERED AND CONTINUOUS BEAMS AND TRUSS TOP AND BOTTOM CHORDS:
     24F V8 DF/DF
     BENDING (Fb) = 2400 PSI (TENSION ZONE)
     BENDING (Fb) = 2400 PSI (COMPRESSION ZONE)
     SHEAR PARALLEL TO GRAIN (Fv) = 240 PSI
     MODULUS OF ELASTICITY (E) = 1,800,000 PSI
   - POSTS AND TRUSS WEBS: DOUGLAS FIR COMBINATION 3 DF
     COMPRESSION PARALLEL TO GRAIN (Fc) = 1850 PSI (2 OR MORE LAMINATIONS)
     COMPRESSION PARALLEL TO GRAIN (Fc) = 2300 PSI (4 OR MORE LAMINATIONS)
     TENSION PARALLEL TO GRAIN (Ft) = 1450 PSI
     MODULUS OF ELASTICITY (E) = 1,900,000 PSI

   EXTERIOR EXPOSED LOCATIONS
   - SIMPLE SPAN BEAMS: ALASKAN CEDAR 20F-V12 AC/AC
     BENDING (Fb) = 2000 PSI (TENSION ZONE)
     BENDING (Fb) = 1400 PSI (COMPRESSION ZONE)
     SHEAR PARALLEL TO GRAIN (Fv) = 240 PSI
     MODULUS OF ELASTICITY (E) = 1,500,000 PSI
   - CANTILEVERED AND CONTINUOUS BEAMS AND TRUSS TOP AND BOTTOM CHORDS:
     ALASKAN CEDAR 20F-V13 AC/AC
     BENDING (Fb) = 2000 PSI (TENSION ZONE)
     BENDING (Fb) = 2000 PSI (COMPRESSION ZONE)
     SHEAR PARALLEL TO GRAIN (Fv) = 240 PSI
     MODULUS OF ELASTICITY (E) = 1,500,000 PSI
   - POSTS AND TRUSS WEBS: ALASKAN CEDAR COMBINATION 70 AC
     COMPRESSION PARALLEL TO GRAIN (Fc) = 1450 PSI
     TENSION PARALLEL TO GRAIN (Ft) = 975 PSI
     MODULUS OF ELASTICITY (E) = 1,300,000 PSI

MANUFACTURED LUMBER

S- 061700 N001A
200602. Q2

1. WOOD I-JOISTS SHALL BE MANUFACTURED BY "RED-BUILT", "WEYERHAUSER" OR ACCEPTED EQUAL, MANUFACTURED IN ACCORDANCE WITH APPROVED SHOP DRAWINGS. THE ENTIRE I-JOIST ASSEMBLY SHALL CONFORM TO ICC ACCEPTANCE CRITERIA AC14.
2. PROVIDE SHOP AND INSTALLATION DRAWINGS TO INDICATE TYPES, SIZE, SPACING, BRIDGING, BLOCKING, CONNECTIONS, ANCHORING AND OTHER PERTINENT DETAILS.
3. SUBSTITUTIONS MUST MEET OR EXCEED MOMENT, SHEAR AND STIFFNESS OF THOSE MEMBERS SPECIFIED AT THE SAME DEPTH AND SPACING.
4. SPRINKLER LINE ATTACHMENTS SHALL CONFORM TO NFPA 13 AND "RED-BUILT", "WEYERHAUSER" PUBLICATION "GUIDELINES FOR SPRINKLER SYSTEM INSTALLATIONS". ATTACHMENT OF LOADS SHALL BE APPROVED PRIOR TO INSTALLATION. DO NOT NOTCH OR DRILL THROUGH MANUFACTURED MEMBERS.
5. PARALLEL STRAND LUMBER (PSL) BEAMS SHALL BE "PARALLAM" MANUFACTURED BY:"WEYERHAUSER" OR AN ACCEPTED EQUAL WITH THE FOLLOWING MINIMUM PROPERTIES: E = 2,200,000 PSI, Fb = 2,900 PSI, Fv = 290 PSI
6. LAMINATED STRAND LUMBER (LSL) BEAMS SHALL BE "TIMBERSTRAND" MANUFACTURED BY: "WEYERHAUSER" OR AN ACCEPTED EQUAL WITH THE FOLLOWING MINIMUM PROPERTIES: E = 1,550,000 PSI, Fb = 2325 PSI, Fv = 310 PSI
7. LAMINATED VENEER LUMBER (LVL) BEAMS SHALL BE "MICROLAM" MANUFACTURED BY:"WEYERHAUSER" OR AN ACCEPTED EQUAL WITH THE FOLLOWING MINIMUM PROPERTIES: E = 2,000,000 PSI, Fb = 2,600 PSI, Fv = 285 PSI

METAL-PLATE WOOD TRUSSES

S- 061753 N001A
181001. Q2

1. DESIGN, MANUFACTURE AND PROVIDE QUALITY ASSURANCE FOR TRUSSES IN CONFORMANCE WITH CBC, SECTION 2303.4 AND ANSI/TPI 1, UNO.
2. TRUSS LOADING: TYP, UNO. SEE PLANS FOR LOADING IN ADDITION TO TYPICAL LOADING BELOW.
   A. ROOF TOP CHORD: 11.4 PSF DL, 20.0 PSF LL, 0 PSF SL. WIND LOAD SHALL BE DETERMINED USING APPLICABLE LOAD CASES AND COEFFICIENTS PER ASCE 7-16, SEE WIND DESIGN CRITERIA ON SO01.
   ROOF BOTTOM CHORD: 7.6 PSF DL, 10.0 PSF LL
   TOP & BOTTOM CHORD LL DO NOT ACT SIMULTANEOUSLY.
   B. PROVIDE ADDITIONAL DL AS REQUIRED TO SUPPORT MECHANICAL UNITS AS SHOWN ON FRAMING PLANS.
   C. PROVIDE ADDITIONAL DL AS REQUIRED TO SUPPORT FIRE SPRINKLER LINES AS SHOWN ON FIRE SPRINKLER PLANS.
   D. IN ADDITION TO ABOVE LOADS, ALL MEMBERS SHALL BE DESIGNED & DETAILED FOR AN ADDITIONAL NON-CONCURRENT 300# CONCENTRATED LL AT ANY POINT IN THE SPAN AT THE TOP OR BOTTOM CHORD.
3. INCREASE IN ALLOWABLE STRESSES FOR ASSEMBLIES OF REPETITIVE FRAMING SHALL BE USED ONLY FOR TOP CHORD MEMBERS WHERE THREE OR MORE TRUSSES ARE IN CONTACT OR SPACED NO MORE THAN 24" ON CENTER AND SHEATHED WITH ROOF OR FLOOR SP.
   A. DEFLECTION SHALL BE LIMITED TO THE FOLLOWING:
   VERTICAL DEFLECTIONS:
   AT ROOF: LL=SPAN/240, (LL+DL)=SPAN/180
   AT ROOF SUPPORTING PLASTER: LL=SPAN/360, (LL+DL)=SPAN/240
   TOP CHORD PANELS: LL=SPAN/180, (LL+DL)=SPAN/120
   HORIZONTAL DEFLECTIONS:
   AT ROOF: LL=0.75", (LL+DL)=1.25"
4. UNBALANCED LOADS SHALL BE USED WHERE SUCH LOADING WILL RESULT IN LARGER MEMBERS OR CONNECTIONS. TRUSSES SHALL BE DESIGNED TO RESIST THE STRESSES CAUSED BY UNIT LIVE OR SNOW LOADS ON ONE HALF OF THE SPAN IF SUCH LOADING RESULTS IN REVERSE STRESSES, OR STRESSES GREATER IN ANY PORTION THAN THE STRESSES PRODUCED BY THE REQUIRED UNIT LIVE OR SNOW LOAD UPON THE ENTIRE SPAN.
5. MINIMUM MEMBER SIZES UNO: TOP CHORD 2x4, BOTTOM CHORD 2x4, WEBS 2x3. MINIMUM GRADE OF LUMBER: STRESSED RATED LUMBER FOR ALL PIECES WITH NO 2 OR BETTER AT CHORDS. EACH PIECE OF WOOD SHALL BE CUT FROM GRADE STAMPED LUMBER. MAXIMUM MOISTURE CONTENT OF EACH PIECE SHALL NOT EXCEED 19% AT THE TIME OF FABRICATION UNLESS LATERAL RESISTANCE VALUES OF THE METAL CONNECTOR PLATES ARE REDUCED PER TPI. MOISTURE CONTENT OF FINISHED TRUSSES SHALL NOT EXCEED 19% AT TIME OF INSTALLATION.
6. DESIGN CAMBER FOR 11/2 TIMES DEAD LOAD.
7. TRUSS DESIGN DRAWINGS AND CALCULATIONS, STAMPED & SIGNED BY A CIVIL ENGINEER LICENSED IN THE STATE OF CALIFORNIA, AND ICC APPROVALS FOR THE METAL CONNECTOR PLATES SHALL BE SUBMITTED TO THE STRUCTURAL ENGINEER FOR REVIEW PRIOR TO FABRICATION. TRUSS SUBMITTAL PACKAGE MUST BE APPROVED BY THE ENFORCEMENT AGENCY PRIOR TO FABRICATION.
8. TRUSS PLACEMENT DIAGRAMS SHALL BE INCLUDED WITH THE TRUSS SUBMITTAL PACKAGE. THE TRUSS PLACEMENT DIAGRAM SHALL IDENTIFY THE PROPOSED LOCATIONS FOR EACH INDIVIDUALLY DESIGNATED TRUSS AND REFERENCE THE CORRESPONDING TRUSS DESIGN DRAWING. TRUSS PLACEMENT DIAGRAMS THAT DEVIATE FROM THE CONSTRUCTION PERMIT DRAWINGS ARE REQUIRED TO BEAR THE SEAL OR SIGNATURE OF THE TRUSS DESIGNER.
9. DESIGN AND PROVIDE ALL PERMANENT TRUSS BRACING REQUIRED FOR LATERAL STABILITY AND LOAD CARRYING CAPACITY OF TRUSSES, INCLUDING ANY STRESS REVERSALS DUE TO REQUIRED LOADING. DESIGN AND PROVIDE PERMANENT INDIVIDUAL TRUSS MEMBER RESTRAINT / BRACING IN ACCORDANCE WITH BCSI-B1, B3 & B7. PERMANENT INDIVIDUAL RESTRAINT BRACING SHALL BE BY CONTINUOUS LATERAL RESTRAINTS WITH DIAGONAL BRACES TO THE BUILDING LATERAL FORCE RESISTING SYSTEMS OR BY FULL LENGTH INDIVIDUAL WEB REINFORCEMENT. TOP CHORDS NOT SHEATHED BY SP SHOWN ON PLANS SHALL BE BRACED @ 34" OC MAX. BOTTOM CHORDS WITHOUT GYPSUM SHEATHING SHALL BE BRACED @ 10'-0" OC MAX. FLOOR TRUSS BOTTOM CHORDS SHALL BE BRACED WITH STRONG BACKS @ 10'-0" OC MAX. WEBS OF GABLE END TRUSSES SHALL BE BRACED IF OVER 6'-0" LONG.
10. PROVIDE "SIMPSON" DTC ROOF TRUSS CLIPS AT ALL CROSS POINTS BETWEEN TRUSS MEMBERS AND NON-LOAD-BEARING WALLS TO PROVIDE FOR ALIGNMENT CONTROL AND VERTICAL TRUSS MOVEMENT WHEN FULL DEAD LOADS ARE APPLIED. INSTALL SLOT NAILS AT THE MIDDLE OF THE SLOT.
11. DIMENSIONS SHOWN FOR EXTERIOR TRUSS REACTION POINTS ARE TO OUTSIDE FACE OF SUPPORTING MEMBER, UNO. VERIFY ALL DIMENSIONS AND BEARING LENGTHS PRIOR TO DESIGN AND FABRICATION.
12. DESIGN AND DETAIL CONNECTIONS OF MULTI-PLY TRUSSES. USE THE FOLLOWING MINIMUM CONNECTIONS AT EACH CHORD AND WEB IN CONTACT:
    TWO-PLY TRUSSES - (2) 10D @ 12" OC
    THREE-PLY TRUSSES - "SIMPSON" SDW22438 @ 12" OC
    FOUR-PLY TRUSSES - "SIMPSON" SDW22600 @ 12" OC
13. METAL CONNECTOR PLATES SHALL BE MANUFACTURED BY A COMPANY MAINTAINING A CURRENT ICC REPORT.
14. TRUSSES SHALL BE HANDLED DURING FABRICATION, DELIVERY AND AT JOBSITE SO AS NOT TO BE SUBJECTED TO EXCESSIVE LATERAL BENDING. CUTTING AND ALTERING OF TRUSSES IS NOT PERMITTED. CONCENTRATED LOADS SHALL NOT BE PLACED ATOP TRUSSES UNTIL ALL SPECIFIED BRACING HAS BEEN INSTALLED AND DECKING IS PERMANENTLY NAILED IN PLACE. BRACE TRUSSES SUFFICIENTLY DURING INSTALLATION TO PREVENT TOPPLING OR DOMINOING. TEMPORARY INSTALLATION RESTRAINT / BRACING DURING INSTALLATION SHALL BE IN ACCORDANCE WITH THE RECOMMENDATIONS OF BCSI-B1, B2 & B7.

CROSS LAMINATED TIMBER

Q1

1. ALL CROSS-LAMINATED TIMBER SHALL BE MANUFACTURED AND IDENTIFIED IN CONFORMANCE WITH APA STANDARD FOR PERFORMANCE RATED CLT ANSI/APA PRG 320/2018.
2. DESIGN IS FOR DRY CONDITIONS OF USE, BUT ADHESIVES USED SHALL BE FOR WET CONDITIONS OF USE PER AITC190.1
3. DESIGN IS FOR SERVICE TEMPERATURE LESS THAN 100° F.
4. APPEARANCE CLASSIFICATION SHALL BE INDUSTRIAL, UNO. FOR FINISH AND APPEARANCE CLASSIFICATIONS AT VISIBLE SURFACES, SEE ARCHIECTURAL.
5. SUBMIT FABRICATION AND INSTALLATION DRAWINGS FOR REVIEW PRIOR TO FABRICATION.
6. CLT SHALL HAVE MOISTURE CONTENT LESS THAN 15%
7. CLT PANELS SHALL HAVE CONSIST OF MULTIPLE ALTERNATING LAYERS OF ½" MIN TO 1 ½" MAX THICK LAMINATIONS BONDED BY AN ADHESIVE MEETING THE REQUIREMENTS OF AITC 405. EACH PANEL SHALL HAVE A MINIMUM OF (3) LAMINATIONS.
8. CLT LAMINATIONS SHALL BE COMPOSED OF VISUALLY GRADED #2 OR BETTER SPRUCE PINE FIR PLANKS. EACH LAMINATION SHALL BE ORIENTED CROSSWISE TO NEXT LAYER OF LAMINATION.
9. EACH MEMBER SHALL BE INDIVIDUALLY WRAPPED DURING SHIPPING AND FIELD HANDLING PER AITC 111.
10. MANUFACTURE FROM SPECIES & GRADES OF LUMBER WHICH WILL PRODUCE ESIGN VALUES EQUAL TO OR EXCEEDING THE FOLLOWING WHEN LOADED PERPENDICULAR TO THE WIDE FACES OF THE LAMINATIONS:
11. CONNECTION BETWEEN PANELS SHALL BE 5/16" DIA SDST SCREWS W/ 8D MINIMUM EMBED, UNO
12. ANCHOR POINTS FOR INSTALLATION STRAPS AND HOIST POINTS SHALL HAVE 3 ½" MIN EDGE DISTANCE.
13. CLT PANELS IN CONTACT WITH EARTH, CMU OR CONCRETE SHALL HAVE VAPOR BARRIER PROVIDED AT JOINT INTERFACE, TYP UNO
14. ALL CLT PANEL JOINTS AND INTERFACES BETWEEN PANELS AND WALLS SHALL BE SEALED PER ARCHITECTURAL SPECIFICATIONS.
15. COORDINATE ALL PANEL OPENINGS, RECESSES AND PENTRATIONS WITH CLT SUPPLIER PRIOR TO SHOP DRAWING CREATION.
16. ALL MEMBERS

ADHESIVE ANCHORS IN CONCRETE

S- 056000_N005A
190805. Q2

1. REFERENCES TO "EPOXY" OR "CHEMICAL" ANCHORS EMBEDDED IN CONCRETE SHALL REFER TO THESE NOTES.
2. ACCEPTABLE ADHESIVE PRODUCTS ARE:
   - "HILTI" HIT-RE 500 V3 (ICC ESR-3814)
   - "HILTI" HIT-HY-200 (ICC ESR-3187)
   - "SIMPSON" SET-XP (ICC ESR-2508)
   - "SIMPSON" SET-3G (ICC ESR-4057)
   - "SIMPSON" AT-XP (IAPMO ER-263)
   - "DEWALT" PURE 110+ (ICC ESR-3298)
   - "DEWALT" AC200+ GOLD (ICC ER-4027)
3. THREADED ROD AND REBAR USED W/ ADHESIVE ANCHORS SHALL MEET THE REQUIREMENTS OF THE EVALUATION AGENCY REPORT.
4. EMBEDMENT DEPTHS SHALL BE 8 TIMES THE NOMINAL DIAMETER OF ANCHOR, UNO.
5. CONCRETE SHALL MEET THE SPECIFIED DESIGN STRENGTH PRIOR TO INSTALLATION, AND SHALL HAVE A MINIMUM AGE OF 21 DAYS, UNO.
6. TEST LOADS SHALL BE AS INDICATED IN DRAWINGS. IF NO TEST LOAD IS SPECIFIED, TEST LOAD SHALL BE 1000 LBS.

SCREW ANCHORS IN CONCRETE

S- 056000_N004A
181128. Q2

1. EMBEDMENT SHALL BE AS INDICATED IN THE TABLE BELOW, TYP UNO. ALL EMBEDMENTS SPECIFIED ARE NOMINAL EMBEDMENT DEPTHS REQUIRED.

"HILTI" KWIK HUS-EZ (KH-EZ) / KWIK HUS-EZ1 (KH-EZ1) INSTALLED IN NORMAL WEIGHT OR LIGHT WEIGHT CONCRETE (f'c = 3000 PSI MIN) (ICC REPORT ESR 3027)

	GENERAL CONCRETE & TOPSIDE OF CONC O/ STL DECK					UNDERSIDE OF CONC OVER STEEL DECK					
						LOWER FLUTE			UPPER FLUTE		
ANCHOR DIA	1/4"	3/8"	1/2"	5/8"	3/4"	1/4"	3/8"	1/2"	1/4"	3/8"	1/2"
STD EMBED, Hnom TYP UNO	1 5/8"	1 5/8"	3"	5"	6 1/4"	1 5/8"	2 1/2"	3"	1 5/8"	1 5/8"	2 1/4"
MIN CONC THICKNESS, T	* 3 1/4"	3 1/4"	4 3/4"	7"	8 1/4"	SEE DIAGRAM BELOW T = 3 1/4" MIN, C = 1 1/4" MIN					
MAX INSTALLATION TORQUE (LB-FT)	18	40	45	85	115	18	40	45	18	40	45
TORQUE TEST LOAD (LB-FT)	9	20	23	43	58	9	20	23	9	20	23

* T= 2 1/2" AT TOPSIDE OF CONC O/ STEEL DECK

"SIMPSON" TITEN HD INSTALLED IN NORMAL WEIGHT OR LIGHT WEIGHT CONCRETE (f'c = 3000 PSI MIN) (ICC REPORT ESR 2713)

	GENERAL CONCRETE & TOPSIDE OF CONC O/ STL DECK					UNDERSIDE OF CONC OVER STEEL DECK					
						LOWER FLUTE			UPPER FLUTE		
ANCHOR DIA	1/4"	3/8"	1/2"	5/8"	3/4"	1/4"	3/8"	1/2"	1/4"	3/8"	1/2"
STD EMBED, Hnom TYP UNO	1 5/8"	2 1/2"	3 1/4"	4"	5 1/2"	1 5/8"	2 1/2"	3 1/2"	1 5/8"	1 7/8"	2"
MIN CONC THICKNESS, T	3 1/4"	* 4"	5"	6"	8 3/4"	SEE DIAGRAM BELOW T = 1 1/2" MIN IN LOWER FLUTE T = 3 1/4" MIN IN UPPER FLUTE C = 3/4" MIN					
MAX INSTALLATION TORQUE (LB-FT)	24	50	65	100	150	24	50	65	24	50	65
TORQUE TEST LOAD (LB-FT)	12	25	33	50	75	12	25	33	12	25	33

* T= 3 1/4" AT TOPSIDE OF CONC O/ STEEL DECK

"DEWALT" SCREWBOLT+ INSTALLED IN NORMAL WEIGHT OR LIGHT WEIGHT CONCRETE (f'c = 3000 PSI MIN) (ICC REPORT ESR 3889)

	GENERAL CONCRETE & TOPSIDE OF CONC O/ STL DECK					UNDERSIDE OF CONC OVER STEEL DECK					
						LOWER FLUTE			UPPER FLUTE		
ANCHOR DIA	1/4"	3/8"	1/2"	5/8"	3/4"	3/8"	1/2"	5/8"		3/8"	1/2"
STD EMBED, Hnom TYP UNO	1 5/8"	2"	3"	4"	4 1/4"	2"	3"	4"		2"	2 1/2"
MIN CONC THICKNESS, T	3 1/4"*	3 1/2"*	5 1/4"	6"	6"	SEE DIAGRAM BELOW T = 2 1/2" MIN IN LOWER FLUTE T = 3 1/4" MIN IN UPPER FLUTE C = 3/4" MIN					
MAX INSTALLATION TORQUE (LB-FT)	19	25	45	60	70	25	45	60		25	45
TORQUE TEST LOAD (LB-FT)	9	12	25	30	35	12	25	30		12	25

* T= 2 1/2" AT TOPSIDE OF CONC O/ STEEL DECK

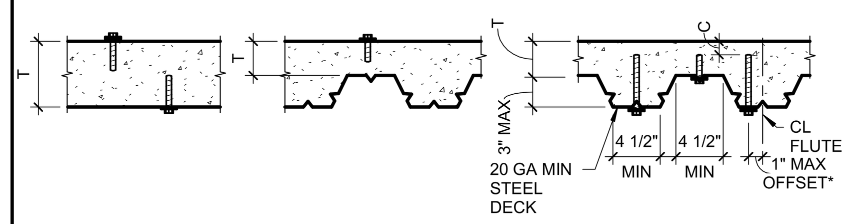

* UNLESS LARGER OFFSET PERMITTED BY EVALUATION AGENCY REPORT

GENERAL CONC | TOPSIDE OF CONC O/ STEEL DECK | UNDERSIDE OF CONC O/ STEEL DECK

EXPANSION ANCHORS IN CONCRETE

S- 056000_N003A
190805. Q2

1. EMBEDMENT SHALL BE AS INDICATED IN THE TABLE BELOW, TYP UNO. ALL EMBEDMENTS SPECIFIED ARE NOMINAL EMBEDMENT DEPTHS. REFER TO EVALUATION AGENCY REPORT FOR EFFECTIVE EMBEDMENTS.

"HILTI" KWIK BOLT-TZ INSTALLED IN NORMAL WEIGHT OR LIGHT WEIGHT CONCRETE (f'c = 3000 PSI MIN) (ICC REPORT ESR 1917)

	GENERAL CONCRETE & TOPSIDE OF CONC O/ STEEL DECK					UNDERSIDE OF CONC O/ STEEL DECK			
ANCHOR DIA		3/8"	1/2"	5/8"	3/4"	3/8"	1/2"	5/8"	
STD EMBED, Hnom TYP UNO		2 5/16"	** 3 5/8"	4 1/2"	5 5/8"	2 3/8"	2 3/8"	3 5/8"	
MIN CONC THICKNESS, T		* 4"	* 6"	6"	8"	SEE DIAGRAM BELOW T = 1 1/2" MIN, C = 5/8" MIN			
TORQUE TEST LOAD (LB-FT)		25	40	60	110	25	40	60	

* T = 3 1/4" MIN AT TOPSIDE OF CONC O/ STEEL DECK
** STD EMBED = 2 3/8" AT TOPSIDE OF CONC O/ STEEL DECK

"SIMPSON" STRONG-BOLT 2 INSTALLED IN NORMAL WEIGHT OR LIGHT WEIGHT CONCRETE (f'c = 3000 PSI MIN) (ICC REPORT ESR 3037)

	GENERAL CONCRETE & TOPSIDE OF CONC O/ STEEL DECK					UNDERSIDE OF CONC O/ STEEL DECK			
ANCHOR DIA	1/4"	3/8"	1/2"	5/8"	3/4"	3/8"	1/2"	5/8"	
STD EMBED, Hnom TYP UNO	1 3/4"	1 7/8"	**3 7/8"	3 3/8"	4 1/8"	2"	2 3/4"	3 3/8"	
MIN CONC THICKNESS, T	3 1/4"	3 1/4"	* 6"	5 1/2"	6 3/4"	SEE DIAGRAM BELOW T = 1 1/2" MIN, C = 1/2" MIN			
TORQUE TEST LOAD (LB-FT)	4	30	60	90	150	30	60	90	

* T = 3 1/4" MIN AT TOPSIDE OF CONC O/ STEEL DECK
** STD EMBED = 2 3/4" AT TOPSIDE OF CONC O/ STEEL DECK

"DEWALT" POWER-STUD+ SD2 INSTALLED IN NORMAL WEIGHT OR LIGHT WEIGHT CONCRETE (f'c = 3000 PSI MIN) (ICC REPORT ESR 2502)

	GENERAL CONCRETE & TOPSIDE OF CONC O/ STEEL DECK					UNDERSIDE OF CONC O/ STEEL DECK			
ANCHOR DIA		3/8"	1/2"	5/8"	3/4"	3/8"	1/2"	5/8"	3/4"
STD EMBED, Hnom TYP UNO		**2 3/8"	**3 3/4"	4 7/8"	5 3/4"	2 3/8"	2 1/2"	3 5/8"	4 1/2"
MIN CONC THICKNESS, T		* 4"	*5 3/4"	6 1/2"	10"	SEE DIAGRAM BELOW T = 3 1/4" MIN, C = 3/4" MIN			
TORQUE TEST LOAD (LB-FT)		20	40	60	110	25	40	60	110

* T = 2 1/2" MIN AT TOPSIDE OF CONC O/ STEEL DECK
** STD EMBED = 2 1/2" AT TOPSIDE OF CONC O/ STEEL DECK

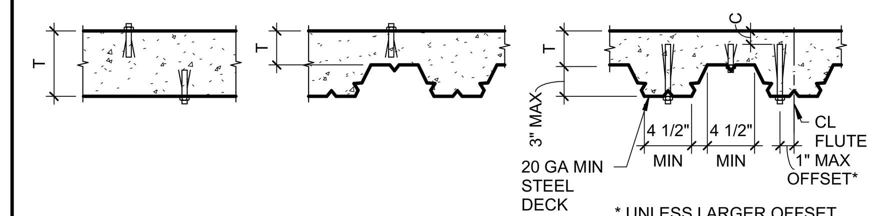

* UNLESS LARGER OFFSET PERMITTED BY EVALUATION AGENCY REPORT

GENERAL CONC | TOPSIDE OF CONC O/ STEEL DECK | UNDERSIDE OF CONC O/ STEEL DECK

POST INSTALLED ANCHORS

S- 056000_N002A
170127. Q2

THESE NOTES SHALL APPLY TO THE INSTALLATION, INSPECTION, AND TESTING OF EXPANSION, ADHESIVE, AND SCREW ANCHORS. USE SPECIFIC PRODUCTS WHERE INDICATED. IF A SPECIFIC PRODUCT / MANUFACTURER IS NOT NOTED, SELECT ANCHOR FROM THE PROVIDED TABLES BASED ON ANCHOR TYPE, DIAMETER AND BASE MATERIAL. POST-INSTALLED ANCHORS / REINFORCING ARE NOT PERMITTED TO REPLACE CAST-IN ANCHORS/REINFORCING UNLESS SPECIFICALLY NOTED.

INSTALLATION

1. INSTALL PER REQUIREMENTS OF THE EVALUATION AGENCY REPORT & MANUFACTURER'S PUBLISHED INSTALLATION INSTRUCTIONS FOR THE SPECIFIC ANCHOR.
2. INSTALLATION OF ADHESIVE ANCHORS INSTALLED IN HORIZONTAL OR UPWARDLY INCLINED ORIENTATIONS RESISTING SUSTAINED TENSION LOADS (AS SPECIFICALLY NOTED ON DETAILS) SHALL BE PERFORMED BY PERSONNEL CERTIFIED BY AN APPLICABLE CERTIFICATION PROGRAM. CERTIFICATION SHALL INCLUDE A WRITTEN TEST AND PERFORMANCE TEST IN ACCORDANCE WITH THE ACI/CRSI ADHESIVE ANCHOR INSTALLER CERTIFICATION PROGRAM, OR EQUIVALENT. CERTIFICATION PROGRAM SHALL BE SUBMITTED TO STRUCTURAL ENGINEER FOR REVIEW AND APPROVAL PRIOR TO INSTALLATION.
3. ANCHOR INSTALLATION SHALL MEET THE MINIMUM EMBEDMENT, EDGE DISTANCE, SPACING, AND BASE MATERIAL THICKNESS CRITERIA ESTABLISHED BY THE RELEVANT EVALUATION AGENCY REPORT & MANUFACTURER'S PUBLISHED INSTALLATION INSTRUCTIONS.
4. ANCHOR INSTALLATION & CURE TEMPERATURES SHALL FOLLOW EVALUATION AGENCY REPORT & MANUFACTURER'S PUBLISHED INSTALLATION INSTRUCTIONS.
5. WHEN INSTALLING ANCHORS IN CONCRETE OR MASONRY, DO NOT DAMAGE REINFORCING (REBAR AND/OR PRE/POST TENSIONED STRANDS). LOCATE ALL REINFORCING AT AFFECTED AREAS USING NON-DESTRUCTIVE MEANS PRIOR TO INSTALLING ANCHORS. MAINTAIN A MINIMUM CLEARANCE OF TWO INCHES BETWEEN THE REINFORCEMENT AND THE ANCHOR.

INSPECTION

1. PROVIDE SPECIAL INSPECTION AS REQUIRED BY THE EVALUATION AGENCY REPORT AND ENFORCEMENT AGENCY. WHERE EVALUATION AGENCY REPORT PERMITS EITHER PERIODIC OR CONTINUOUS INSPECTION, USE PERIODIC.
2. ADHESIVE ANCHORS INSTALLED IN HORIZONTAL OR UPWARDLY INCLINED ORIENTATIONS RESISTING SUSTAINED TENSION LOADS (AS SPECIFICALLY NOTED ON DETAILS) SHALL BE CONTINUOUSLY INSPECTED BY AN INSPECTOR SPECIALLY APPROVED FOR THAT PURPOSE BY THE ENFORCEMENT AGENCY.

TESTING

1. TEST ANCHORS IN ACCORDANCE WITH THE EVALUATION AGENCY REPORT AND ENFORCEMENT AGENCY REQUIREMENTS FOR THE SPECIFIC ANCHOR AND IN ACCORDANCE WITH THE FREQUENCIES AND TEST METHODS LISTED BELOW.
2. TESTS SHALL BE PERFORMED IN THE PRESENCE OF THE PROJECT INSPECTOR AND A REPORT OF THE TEST RESULTS SHALL BE SUBMITTED TO THE ENFORCEMENT AGENCY AND STRUCTURAL ENGINEER.
3. REACTION LOADS FROM TEST FIXTURE(S) MAY BE APPLIED CLOSE TO THE ANCHOR BEING TESTED, PROVIDED THE ANCHOR IS NOT RESTRAINED BY THE FIXTURE(S) FROM WITHDRAWING.
4. TEST METHOD SHALL BE AS NOTED FOR SPECIFIC ANCHOR TYPES AND THE FOLLOWING CRITERIA APPLY FOR THE ACCEPTANCE OF INSTALLED ANCHORS:
   - HYDRAULIC RAM METHOD (TENSION TESTING):
     THE ANCHOR SHALL MAINTAIN THE TEST LOAD FOR 15 SECONDS AND SHALL HAVE NO OBSERVABLE MOVEMENT AT THE APPLICABLE TEST LOAD. A PRACTICAL WAY TO DETERMINE OBSERVABLE MOVEMENT IS THAT THE WASHER UNDER THE NUT BECOMES LOOSE.
   - TORQUE WRENCH METHOD (TORQUE TESTING):
     - THE APPLICABLE TEST TORQUE MUST BE REACHED WITHIN THE FOLLOWING LIMITS:
     - ONE-HALF (1/2) TURN OF THE NUT, TYP UNO.
     - ONE-QUARTER (1/4) TURN OF THE NUT FOR THE 3/8" SLEEVE ANCHOR ONLY.
     - ONE-QUARTER (1/4) TURN OF THE SCREW AFTER INITIAL SEATING OF THE SCREW HEAD FOR SCREW ANCHORS.
5. TESTING FREQUENCIES SHALL BE AS INDICATED IN THE TABLE BELOW. WHEN MULTIPLE ANCHORS ARE USED IN A SINGLE GROUP OR CONNECTION, THE PERCENT OF ANCHORS TESTED AT EACH LOCATION SHALL BE AS INDICATED BELOW.
6. IF ANY ANCHOR FAILS TESTING, ALL ANCHORS OF THE SAME CATEGORY NOT PREVIOUSLY TESTED SHALL BE TESTED UNTIL 10 CONSECUTIVE ANCHORS PASS, THEN THE INITIAL TESTING FREQUENCY SHALL BE RESUMED.

TESTING FREQUENCY

APPLICATION	PERCENT OF ALL ANCHORS
SILL PLATE BOLTING AND REBAR AT SLAB ON GRADE, UNO	5 PERCENT
STRUCTURAL EXCLUDING SILL PLATE BOLTING	50 PERCENT
NON-STRUCTURAL INCLUDING EQUIPMENT ANCHORAGE	25 PERCENT

POWER ACTUATED FASTENERS

S- 056000_N001A
190225. Q2

1. POWER ACTUATED FASTENERS SHALL BE "HILTI" X-U (ICC ESR 2269), "SIMPSON" PDPA (ICC ESR 2138), OR "DEWALT" POWER DRIVEN FASTENERS (ICC ESR 2024), TYP UNO.
2. INSTALLATION OF FASTENERS SHALL BE IN ACCORDANCE WITH THE EVALUATION AGENCY REPORT. INSTALL FASTENERS WITH SUFFICIENT EDGE DISTANCE AND SPACING TO ACHIEVE FULL CAPACITY, UNO.
3. FASTENERS TO CONCRETE OR MASONRY SHALL HAVE 1" MIN EMBEDMENT (1 1/4" MIN FOR "SIMPSON" PDPA IN MASONRY), TYP UNO.
4. FASTENERS TO STRUCTURAL STEEL SHALL HAVE MIN EMBEDMENT TO STEEL PER MANUFACTURER, TYP UNO.
5. FASTENERS MAY NOT BE USED FOR TENSION LOADS EXCEPT FOR THE FOLLOW CONDITIONS:
   - VERTICAL SUSPENSION WIRES FOR ACOUSTICAL TILE OR LAY-IN CEILINGS
   - VERTICAL SUPPORTS OF MECH DUCTS, CONDUITS, ETC WHERE THE SERVICE LOAD ON EACH ANCHOR DOES NOT EXCEED 90 LBS FOR FASTENERS IN CONCRETE OR 250 LBS FOR FASTENERS IN STRUCTURAL STEEL.
   - FASTENERS ARE NOT PERMITTED AT SEISMIC BRACING ATTACHMENTS.
6. WHEN INSTALLING FASTENERS IN PRE/POST-TENSIONED CONCRETE DO NOT DAMAGE STRANDS. LOCATE STRANDS AT AFFECTED AREAS USING NON-DESTRUCTIVE MEANS PRIOR TO INSTALLING FASTENERS. MAINTAIN A MINIMUM CLEARANCE OF 2" BETWEEN THE STRANDS AND THE FASTENERS.

IDENTIFICATION STAMP
DIV. OF THE STATE ARCHITECT
APP: 02-118630 INC:
REVIEWED FOR
SS ☐ FLS ☐ ACS ☑
DATE: 04/13/2021

OFFICE OF THE STATE FIRE MARSHAL
APPROVED FIRE AND PANIC ONLY
Approval of this plan does not authorize or approve any omission or deviation from applicable regulations. Final approval is subject to field inspection. One set of approved plans shall be available on the project site at all times.
PERMIT NO.: 20-N-2332-CP
REVIEWED BY: LITO CATAYLO, OSFM
DATE: 4/1/2021

DGS GENERAL SERVICES
Department of General Services
State of California
Real Estate Services Division
Project Management & Development Branch
707 Third Street, Suite 4-105
West Sacramento, California 95605

NICHOLS MELBURG & ROSSETTO
ARCHITECTS + ENGINEERS
300 Knollcrest Drive
Redding, CA. 96002
(530) 222-3300 (530) 222-3538 FAX
http://www.nmrdesign.com

Copyright © 2021
All ideas, designs, arrangements and plans indicated or represented by this drawing are owned by, and the property of, NICHOLS, MELBURG and ROSSETTO and were created, evolved and developed for use on, and in conjunction with, the specified project. None of such ideas, designs, arrangements or plans shall be used by, or disclosed to any person, firm or corporation for any purpose whatsoever without the written permission of NICHOLS, MELBURG and ROSSETTO.

LICENSE STAMPS
REGISTERED PROFESSIONAL ENGINEER
DARRON E. HUNTINGDALE
No. S4788
STRUCTURAL
STATE OF CALIFORNIA
3/19/2021

STRUCTURAL CONSULTANT
LIONAKIS
1919 Nineteenth Street
Sacramento CA 95811
P 916.558.1900 F 916.558.1919
www.lionakis.com

DRAWING STATUS
CONSTRUCTION DOCUMENTS

ISSUE

No.	Date	Description
1	10/22/2020	INITIAL PLAN REVIEW
2	01/08/2021	AGENCY RESUBMITTAL
3	03/22/2021	AGENCY RESUBMITTAL

If drawing is not 30" x 42" it is a reduced print

PROJECT
RESIDENTIAL CENTER, UKIAH: REPLACEMENT OF EXISTING RESIDENTIAL CENTER
440 EAST HILL ROAD
WILLITS, CALIFORNIA 95490
MENDOCINO COUNTY
CALIFORNIA CONSERVATION CORP

Supervisor | Designed | Drawn: Author

DSA Application No.
02-118630

SHEET TITLE
TYPICAL NOTES

DGS Project Number: 000000000001826
Lionakis Project Number: 018322

Reference North: NORTH
Sheet Scale: 1" = 1'-0"
Sheet Number: S013

ISSUE DATE
July 9, 2021

Plot Date: 3/19/2021 11:19:41 AM
File Name: BIM 360://CCC Willits Residential Center/018322_S-MASTER_R18_CENTRAL.rvt

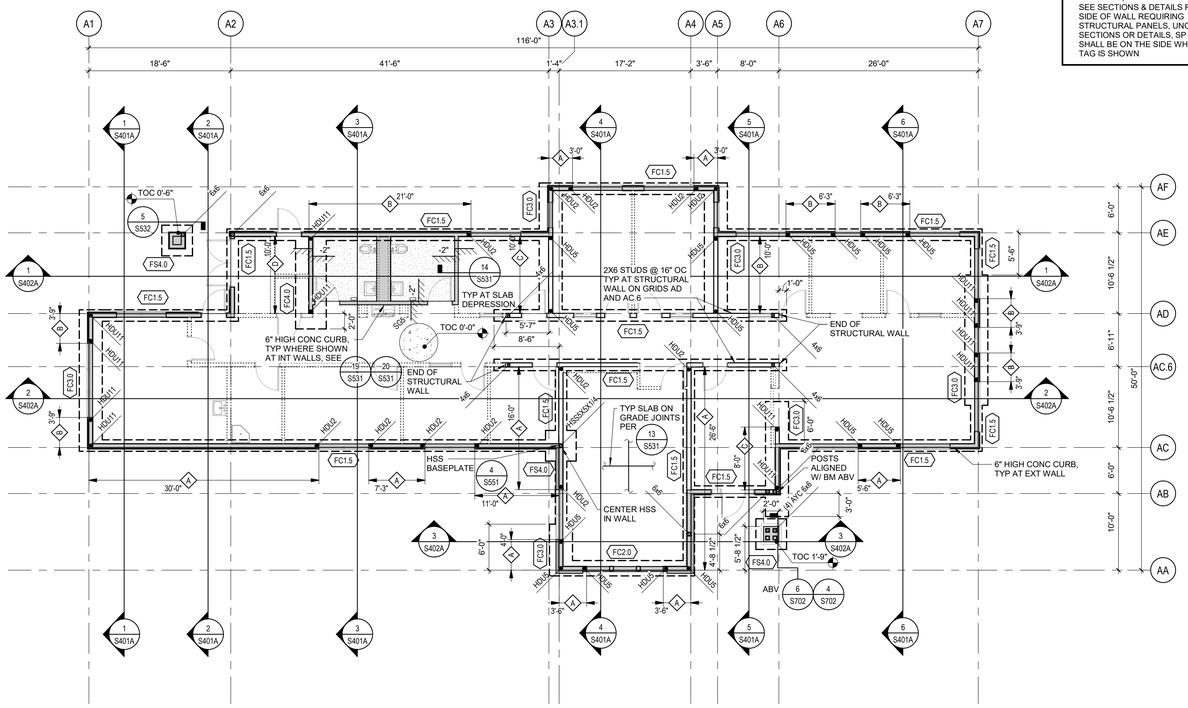

1 ADMINISTRATION BUILDING FLOOR PLAN

SCALE 1/8" = 1'-0"

NORTH

SHEAR WALL SCHEDULE

S- 060600. N001A
170126. Q2

WALL MARK	SP EDGE NAILING	SILL PLATE THICKNESS	STUDS OR BLKG AT PANEL EDGES	SILL PLATE ANCHORAGE		STRUCTURAL PANEL 15/32" STRUCT I
				AB'S TO CONC	NAILS TO WOOD FRAMING	
A	8D @ 6" OC	2X	2X	5/8" DIA @ 48" OC	16D @ 6" OC	ONE SIDE
B	8D @ 4" OC	3X	3X	5/8" DIA @ 40" OC	SEE SECTIONS AND DETAILS	ONE SIDE
C	8D @ 3" OC	3X	3X	5/8" DIA @ 32" OC		ONE SIDE
D	8D @ 2" OC	3X	3X	5/8" DIA @ 24" OC		ONE SIDE
E	8D @ 4" OC	3X	3X	5/8" DIA @ 16" OC		BOTH SIDES
F	8D @ 3" OC	3X	3X	5/8" DIA @ 8" OC		BOTH SIDES
G	10D @ 2" OC	3X	3X	5/8" DIA @ 8" OC		BOTH SIDES

1. SEE 18/S563 FOR TYP SHEAR WALL SP LAYOUT.
2. EDGE NAILING OCCURS AT EVERY PANEL EDGE. FIELD NAILING SHALL BE 8D @ 12" OC, EXCEPT AT TYPE G FIELD NAILING SHALL BE 10D @ 12" OC.
3. NAILS SHALL BE STEEL WIRE COMMON TYPE OF THE SIZES DENOTED. DRIVE STRUCTURAL PANEL NAILS SO THAT THE NAIL HEADS ARE FLUSH WITH THE SURFACE OF THE PANEL. DO NOT OVERDRIVE NAILS. STAGGER NAILS AT EACH SIDE OF JOINTS.
4. STRUCTURAL PANELS SHALL HAVE A PANEL SPAN RATING OF 32/16. OSB OR 5-PLY/5-LAYER PLYWOOD.
5. BLOCK PANEL EDGES WITH FULL STUD WIDTH BLOCKING OF THICKNESS SPECIFIED.
6. SILL PLATE NAILING IS TO PARALLEL FRAMING BELOW (WHETHER BLKG OR CONT). PROVIDE (2) ADDITIONAL NAILS OF SIZE SHOWN TO EA PERPENDICULAR FRAMING BELOW.
7. PREDRILL NAIL HOLES IF SPLITTING OCCURS. STAGGER NAILING TO PREVENT SPLITTING.
8. WHERE STRUCTURAL PANELS OCCUR AT BOTH SIDES OF WALL, STAGGER PANEL JOINTS AT EACH FACE SO THEY DO NOT FALL ON THE SAME STUD OR BLOCKING.
9. FA SPACING AT SHEAR WALLS SHALL BE 3X THE EDGE NAIL SPACING FOR ONE-SIDED SHEAR WALLS, AND 6" OC FOR WALLS WITH STRUCTURAL PANELS ON BOTH SIDES.
10. PROVIDE STRUCTURAL PANELS FULL LENGTH AND HEIGHT OF ALL EXTERIOR WALLS AND AT INTERIOR WALLS AS SHOWN ON SECTIONS AND DETAILS. MINIMUM STRUCTURAL PANEL NAILING SHALL BE TYPE A UNO. SEE PLANS FOR HEAVIER NAILING LOCATIONS NOTED BY WALL MARKS THUS:

MIN LENGTH OF SHEAR WALL SEGMENT (NOT ACTUAL LENGTH) SEE SECTIONS & DETAILS FOR SIDE OF WALL REQUIRING STRUCTURAL PANELS, UNO ON SECTIONS OR DETAILS, SP SHALL BE ON THE SIDE WHERE TAG IS SHOWN

X'-X" X WALL LINE

WHERE EXTENT IS INDICATED, REMAINDER OF WALL LINE REQUIRES TYPE A UNO

IF NO EXTENT IS INDICATED THE ENTIRE WALL LINE REQUIRES THE TYPE NOTED

NOTES

170828. Q2

1. SEE S000 SERIES SHEETS FOR GENERAL NOTES & S500 SERIES SHEETS FOR TYPICAL DETAILS.
2. DIMENSIONS ARE TO FOS OR CENTERLINE OF COLUMNS/POSTS, UNO. SEE SECTIONS & DETAILS FOR FOC LOCATIONS RELATIVE TO FOS.
3. SEE ARCH & OTHER CONSULTANT DWGS FOR DIMENSIONS & LOCATIONS OF WALL OPENINGS.
4. SEE ARCH DWGS FOR DIMENSIONS OF SLAB DEPRESSIONS & SLOPED SLABS.
5. SEE ARCH & OTHER CONSULTANT DWGS FOR PENETRATIONS NOT SHOWN. COMPLY WITH TYPICAL DETAILS.
6. SEE CIVIL DRAWINGS AND SPECIFICATIONS FOR ENGINEERED FILL.
7. EXTERIOR CONCRETE FLATWORK IS NOT SHOWN, SEE CIVIL & ARCH DWGS.
8. CONTINUOUS WALL FOOTINGS TO BE CENTERED UNDER WALLS AND PAD FOOTINGS TO BE CENTERED UNDER COLUMNS, TYP UNO.
9. TOP OF FOOTINGS SHALL BE 1'-0" BELOW FINISHED FLOOR (TOF -1'-0"), TYP UNO. SEE ARCH & OTHER CONSULTANT DRAWINGS FOR UTILITIES THAT WILL AFFECT FOOTINGS AND COMPLY WITH TYPICAL DETAILS.
10. CONTINUOUS FOOTINGS ARE FC1.5, TYP UNO. SEE SCHEDULE FOR CONTINUOUS FOOTING SIZE & REINF.
11. CONCRETE SLAB OVER SUB BASE SHALL BE SG5, TYP UNO. SEE SCHEDULE FOR MORE INFORMATION.
12. EXTERIOR WALLS ARE 2x6 STUDS @ 16" OC, TYP UNO.
13. TOC = 0'-0" TYP UNO (SEE CIVIL DRAWINGS FOR DATUM ELEVATION).

SCHEDULES

DECK SCHEDULE

TYPE	DESCRIPTION
SG5	5" CONC W/ #4 @ 16" OC EA WAY CENTERED IN SLAB O/ VAPOR RETARDER O/ 4" FREE DRAINING CRUSHED ROCK
SG12	12" CONC W/ #4 @ 16" OC T&B EA WAY O/ VAPOR RETARDER O/ 4" FREE DRAINING CRUSHED ROCK

CONTINUOUS FOOTING SCHEDULE

TYPE	WIDTH	DEPTH	REINFORCEMENT
FC1.5	1'-6"	1'-6"	(2) CONT #5 T&B
FC2.0	2'-0"	1'-6"	(3) CONT #5 T&B
FC3.0	3'-0"	1'-6"	(4) CONT #5 T&B AND #4 TIES @ 18" OC
FC3.1	3'-0"	2'-0"	(4) CONT #5 T&B AND #4 TIES @ 18" OC
FC4.0	4'-0"	1'-6"	(5) CONT #5 T&B AND #4 TIES @ 18" OC
FC4.1	4'-0"	2'-0"	(5) CONT #5 T&B AND #4 TIES @ 18" OC

SPREAD FOOTING SCHEDULE

TYPE	SIZE	DEPTH	REINFORCEMENT
FS2.0	2'-0"x2'-0"	1'-6"	(3) #5 EW AT BOT
FS3.0	3'-0"x3'-0"	1'-6"	(4) #5 EW AT BOT
FS4.0	4'-0"x4'-0"	1'-6"	(5) #5 EW AT BOT
FS4.1	4'-0"x4'-0"	2'-0"	(7) #5 EW AT BOT
FS5.0	5'-0"x5'-0"	1'-6"	(7) #5 EW AT BOT
FS5.1	5'-0"x5'-0"	2'-0"	(9) #5 EW AT BOT
FS6.1	6'-0"x4'-0"	1'-6"	#5 @ 12" OC EW AT BOT
FS7.1	7'-0"x7'-0"	2'-0"	(9) #6 EW AT BOT

LEGEND

170828. Q1

- (E) ELEMENTS SHOWN FADED - LINETYPE AND PATTERN/HATCHING AS NOTED FOR NEW CONSTRUCTION
- STRUCTURAL WALL, SEE 10/S561
- NON-STRUCTURAL WALL, SAD, FOR ATTACHMENT, SEE 4/S561 10/S561
- CONCRETE CURB OR PAD
- DEPRESSED SLAB AREA
- SAD FOR EXTENTS
- SLAB STEP SYMBOL
- -2" ELEVATION RELATIVE TO TOC
- SL CA DA CONC SLAB / PLYWOOD / CLT DECK (SOLID LINE INDICATED SPAN OF DIRECTION OF CLT)
- COL SIZE COLUMN WITH CALLOUT
- HD SIZE POST SIZE HOLDOWN & REQUIRED POST, SEE 16/S563
- A SHEAR WALL TYPE, SEE "SHEAR WALL SCHEDULE"
- FCX.X CONTINUOUS FOOTING TAG
- FSX.X SPREAD FOOTING TAG
- FOOTING
- S S STEPPED FOOTING

KEY PLAN

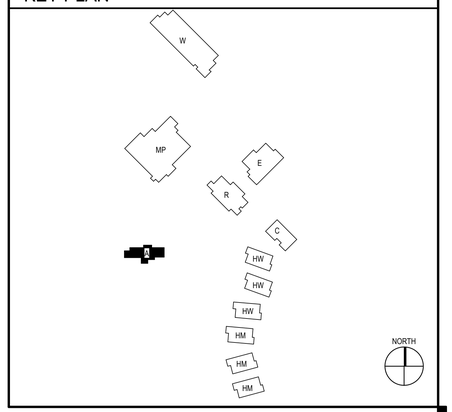

IDENTIFICATION STAMP
DIV. OF THE STATE ARCHITECT
APP: 02-118630 INC:
REVIEWED FOR
SS ☐ FLS ☐ ACS ☑
DATE: 04/13/2021

OFFICE OF THE STATE FIRE MARSHAL
APPROVED FIRE AND PANIC ONLY
Approval of this plan does not authorize or approve any omission or deviation from applicable regulations. Final approval is subject to field inspection. One set of approved plans shall be available on the project site at all times.
PERMIT NO. 20-N-2332-CP
REVIEWED BY: LEO CATAYLO, OSFM
DATE: 4 / /2021

GENERAL SERVICES
Department of General Services
State of California
Real Estate Services Division
Project Management & Development Branch
707 Third Street, Suite 4-105
West Sacramento, California 95605

NICHOLS MELBURG & ROSSETTO
ARCHITECTS + ENGINEERS
300 Knollcrest Drive
Redding, CA 96002
(530) 222-3300 (530) 222-3538 FAX
http://www.nmrdesign.com

Copyright © 2021
All ideas, designs, arrangements and plans indicated or represented by this drawing are owned by, and the property of, NICHOLS, MELBURG and ROSSETTO and were created, evolved and developed for use on, and in conjunction with, the specified project. None of such ideas, designs, arrangements or plans shall be used by, or disclosed to any person, firm or corporation for any purpose whatsoever without the written permission of NICHOLS, MELBURG and ROSSETTO.

LICENSE STAMPS

REGISTERED PROFESSIONAL ENGINEER SIMON E. HUNTINGFORD No. S47580 STRUCTURAL STATE OF CALIFORNIA
3/19/2021

STRUCTURAL CONSULTANT

LIONAKIS
1919 Nineteenth Street
Sacramento CA 95811
P 916.558.1900 F 916.558.1919
www.lionakis.com

DRAWING STATUS
CONSTRUCTION DOCUMENTS

ISSUE

No.	Date	Description
1	10/22/2020	INITIAL PLAN REVIEW
2	01/08/2021	AGENCY RESUBMITTAL
3	03/22/2021	AGENCY RESUBMITTAL

If drawing is not 30" x 42" it is a reduced print

PROJECT
RESIDENTIAL CENTER, UKIAH: REPLACEMENT OF EXISTING RESIDENTIAL CENTER
440 EAST HILL ROAD
WILLITS, CALIFORNIA 95490
MENDOCINO COUNTY
CALIFORNIA CONSERVATION CORP

Supervisor	Designed	Drawn
		Author

DSA Application No.
02-118630

SHEET TITLE
ADMINISTRATION FOUNDATION PLAN

DGS Project Number: 000000000001826
Lionakis Project Number: 018322

Reference North: NORTH
Sheet Scale: As indicated
Sheet Number: S201A

ISSUE DATE
July 9, 2021

Plot Date: 3/19/2021 11:19:46 AM
File Name: BIM 360://CCC Willits Residential Center/018322_S-MASTER_R18_CENTRAL.rvt

TRUSS SCHEDULE

DESIGNATION	TRUSS CONFIGURATION	DESIGNATION	TRUSS CONFIGURATION
T-A1	AC, AD; 12, 12; 8, 8	T-A5	AD, AF; 12, 4; BUILT UP OVER TRUSS; LEDGER, SEE DTLS; COLL TRUSS, P_{LAT} = SEE PLAN
T-A2	ADDL BEARING POINT WHERE OCCURS, SEE PLAN; AC, AD, AE; 12, 12; 8, 8; COLL TRUSS, P_{LAT} = SEE PLAN; VENT AT GABLE END WHERE OCCURS, SAD, COORDINATE TRUSS WEBS AS REQ	T-A6	AA.5, AB, AC.6; 12, 4; BUILT UP OVER TRUSS; BEAM, SEE PLAN
T-A3	AC, AC.6; 12, 8; LEDGER, SEE DTLS	T-A7	A3, A4; 12, 12; 8, 8; VENT AT GABLE END WHERE OCCURS, SAD, COORDINATE TRUSS WEBS AS REQ; COLL TRUSS, P_{LAT} = SEE PLAN
T-A4	AD, AE; 12, 8; LEDGER, SEE DTLS	T-A8	AC.6, AD; 12, 12; 8, 8

NOTES:
1. TRUSS CONFIGURATIONS SHOWN ARE A DIAGRAMATIC OUTLINE INDICATING BEARING SUPPORTS. TRUSS WEB MEMBERS ARE NOT SHOWN AND MAY VARY BETWEEN TRUSS MANUFACTURERS.
2. REFER TO "METAL-PLATE WOOD TRUSSES" NOTES ON SHEET S012 FOR TRUSS DESIGN AND DETAILING REQUIREMENTS.
3. MANUFACTURED ROOF TRUSS LOADS AS SHOWN ON PLAN ARE UNFACTORED DESIGN LOADS. WIND AND SEISMIC LOADS ARE LRFD DESIGN LEVEL FORCES. LOADS SHOWN ON PLAN ARE IN ADDITION TO THE TRUSS DESIGN/LOADING AND DETAILING REQUIREMENTS ON SHEET S012.
4. BEARING POINTS ARE SHOWN AT GRIDS, SEE DETAILS FOR FACE OF STUD RELATIVE TO BEARING LENGTH AND LOCATION. SEE DETAILS FOR WHERE LEDGERS, TRUSS HANGERS OR BEAMS ARE USED AS BEARING POINTS.
5. PROVIDE DIAPHRAGM BOUNDARY NAILING PATTERN AT COLLECTOR TRUSSES, UNO.

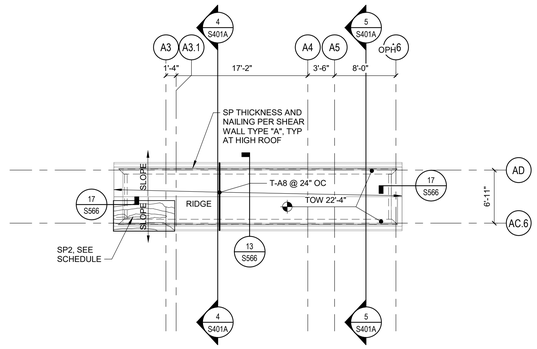

2 ADMINISTRATION BUILDING HIGH ROOF FRAMING PLAN

SCALE 1/8" = 1'-0"

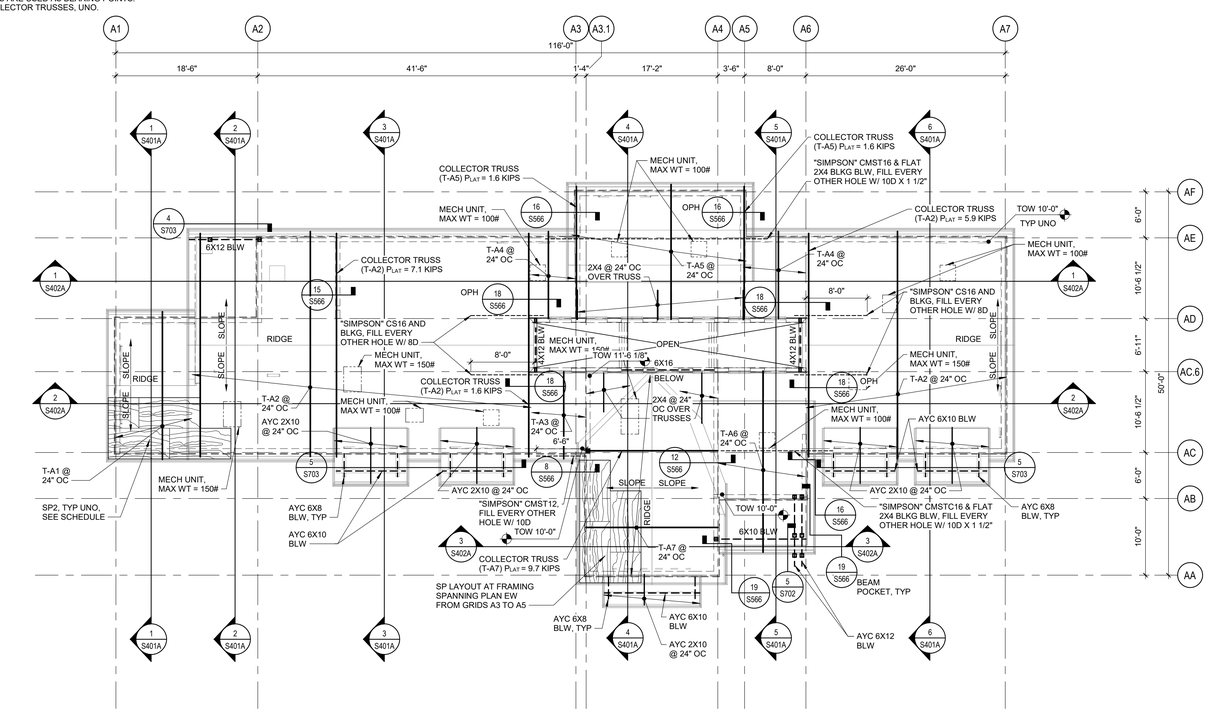

1 ADMINISTRATION BUILDING ROOF FRAMING PLAN

SCALE 1/8" = 1'-0"

NORTH

NOTES

S- 010000_N001A
170828. Q2

1. SEE S000 SERIES SHEETS FOR GENERAL NOTES & S500 SERIES SHEETS FOR TYPICAL DETAILS.
2. SEE S200 SERIES SHEETS FOR WALL & FRAMING ELEVATIONS.
3. DIMENSIONS ARE TO FOS OR CENTERLINE OF COLUMNS/POSTS, UNO.
4. SEE ARCH & OTHER CONSULTANT DWGS FOR DIMENSIONS & LOCATIONS OF WALL OPENINGS. SEE TYPICAL DETAILS FOR FRAMING AT OPENINGS.
5. SEE ARCH & OTHER CONSULTANT DWGS FOR ROOF PENETRATIONS NOT SHOWN. PROVIDE FRAMING AROUND OPENINGS PER TYPICAL DETAILS. SAWCUT OR CORE DRILL CLEAN HOLES WITH NO OVERCUTTING. CONFORM WITH TYPICAL DETAILS.
6. SEE ARCH DWGS FOR DIMENSIONS OF ROOF OVERHANGS, UNO.
7. EXTERIOR WALLS ARE 2x6 STUDS @ 16" OC, TYP UNO.
8. PROVIDE STRUCTURAL PANEL EDGE NAILING TO THE FULL LENGTH OF ALL GLB's, AND MANUFACTURED TRUSSES, I-JOISTS, RIM JOISTS AND BLOCKING AT SHEAR WALLS. SEE PLANS FOR LOCATIONS WHERE DOUBLE ROWS OF EDGE NAILING OCCUR.
9. CAMBER IN GLU-LAM BEAMS SHALL BE 1600' RADIUS, TYP UNO.
10. SEE S-000 SHEETS FOR MANUFACTURED ROOF TRUSS DESIGN CRITERIA.
11. AT EXTERIOR EXPOSED WOOD PROVIDE ALASKAN YELLOW CEDAR, REFER TO DETAILS.

SP NAILING SCHEDULE

S- 061100_N001A
170126. Q2

WOOD STRUCTURAL PANEL NAILING SCHEDULE (UNO)	
- PROVIDE 1/8" SPACE BETWEEN SHEETS FOR ALL SP SHEATHING. - MIN SHEET WIDTH SHALL BE 24" FOR ROOF & FLOOR, 12" FOR WALLS. - SEE 17/S563 FOR TYP STRUCTURAL PANEL LAYOUT.	
SP2 - 19/32" STRUCT I SP, APA SPAN RATED 40/20 ARRANGE SHEETS AS SHOWN ON ROOF FRAMING PLAN	
EN AT PERIMETER OF EA SHEET FN AT INTERIOR CONTACTS OF EA SHEET BN AT PERIMETER OF ROOF	8D @ 6" OC 8D @ 12" OC 8D @ 6" OC
SIDE JOINTS TO BE BLOCKED PER 17/S563.	

LEGEND

180821
Q1

- (E) ELEMENTS SHOWN FADED - LINETYPE AND PATTERN/HATCHING AS NOTED FOR NEW CONSTRUCTION
- STRUCTURAL WALL, SEE 10 / S561
- NON-STRUCTURAL WALL, SAD, FOR ATTACHMENT, SEE 4 / S561
- CONCRETE CURB OR PAD 10 / S561
- DEPRESSED SLAB AREA
- SAD FOR EXTENTS
- SLAB STEP SYMBOL
- -2" ELEVATION RELATIVE TO TOC
- SF CT DT CONC SLAB / PLYWOOD / CLT DECK (SOLID LINE INDICATED SPAN OF DIRECTION OF CLT)
- COL SIZE; HD SIZE; POST SIZE; COLUMN WITH CALLOUT
- HOLDOWN & REQUIRED POST, SEE 16 / S563
- A SHEAR WALL TYPE, SEE "SHEAR WALL SCHEDULE"
- W24X55 BEAM SIZE
- C=2" BEAM CAMBER
- S BEAM SPLICE
- TRUSS W/ SUPERIMPOSED LOADS

KEY PLAN

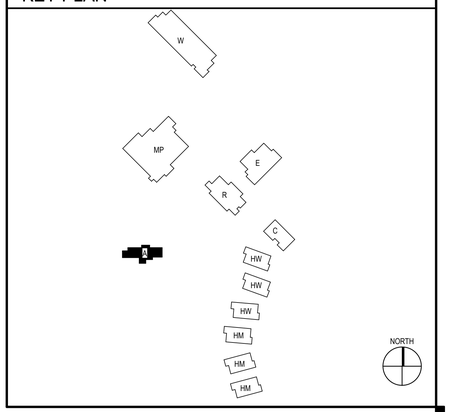

IDENTIFICATION STAMP
DIV. OF THE STATE ARCHITECT
APP: 02-118630 INC:
REVIEWED FOR
SS ☐ FLS ☐ ACS ☑
DATE: 04/13/2021

OFFICE OF THE STATE FIRE MARSHAL
APPROVED FIRE AND PANIC ONLY
Approval of this plan does not authorize or approve any omission or deviation from applicable regulations. Final approval is subject to field inspection. One set of approved plans shall be available on the project site at all times.
PERMIT NO. 20-N-2332-CP
REVIEWED BY: LEO CATAYLO, OSFM
DATE: 4 / /2021

DGS GENERAL SERVICES
Department of General Services
State of California
Real Estate Services Division
Project Management & Development Branch
707 Third Street, Suite 4-105
West Sacramento, California 95605

NICHOLS MELBURG & ROSSETTO ARCHITECTS + ENGINEERS
300 Knollcrest Drive
Redding, CA 96002
(530) 222-3300 (530) 222-3538 FAX
http://www.nmrdesign.com

Copyright © 2021
All ideas, designs, arrangements and plans indicated or represented by this drawing are owned by, and the property of, NICHOLS, MELBURG and ROSSETTO and were created, evolved and developed for use on, and in conjunction with, the specified project. None of such ideas, designs, arrangements or plans shall be used by, or disclosed to any person, firm or corporation for any purpose whatsoever without the written permission of NICHOLS, MELBURG and ROSSETTO.

LICENSE STAMPS

REGISTERED PROFESSIONAL ENGINEER — CORRYE E. HUNTINGTON — No. S47589 — CIVIL STRUCTURAL — STATE OF CALIFORNIA
5/19/2021

STRUCTURAL CONSULTANT

LIONAKIS
1919 Nineteenth Street
Sacramento CA 95811
P 916.558.1900 F 916.558.1919
www.lionakis.com

DRAWING STATUS
CONSTRUCTION DOCUMENTS

ISSUE

No.	Date	Description
1	10/22/2020	INITIAL PLAN REVIEW
2	01/08/2021	AGENCY RESUBMITTAL
3	03/22/2021	AGENCY RESUBMITTAL

If drawing is not 30" x 42" it is a reduced print

PROJECT
RESIDENTIAL CENTER, UKIAH: REPLACEMENT OF EXISTING RESIDENTIAL CENTER
440 EAST HILL ROAD
WILLITS, CALIFORNIA 95490
MENDOCINO COUNTY
CALIFORNIA CONSERVATION CORP

Supervisor	Designed	Drawn
		Author

DSA Application No.
02-118630

SHEET TITLE
ADMINISTRATION ROOF FRAMING PLAN

DGS Project Number	Lionakis Project Number
00000000001826	018322

Reference North — NORTH
Sheet Scale: As indicated
Sheet Number: S202A

ISSUE DATE
July 9, 2021

Plot Date: 3/19/2021 11:26:16 AM
File Name: BIM 360:///CCC Willits Residential Center/018322_S-MASTER_R18_CENTRAL.rvt

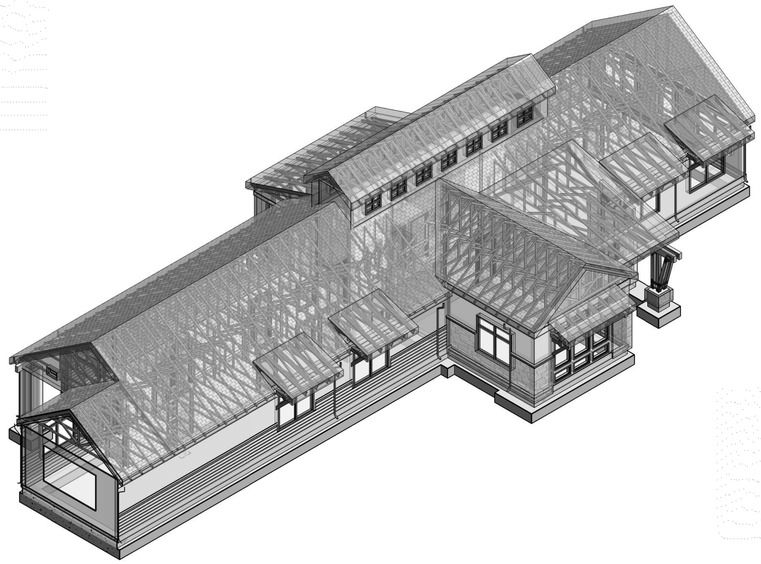

1 BUILDING A - VIEW 1
SCALE

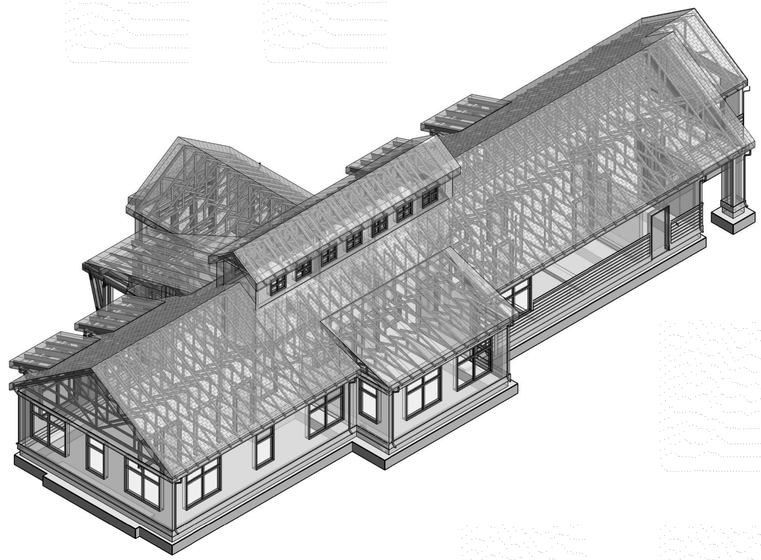

2 BUILDING A - VIEW 2
SCALE

3D VIEW NOTES

170828. Q1

1. FRAMING SHOWN IN THESE VIEWS IS FOR GENERAL INFORMATION ONLY. THE BALANCE OF STRUCTURAL DOCUMENT TAKE PRECEDENCE OVER 3D VIEWS.
2. NOT ALL FRAMING MAY BE SHOWN. SEE CONSTRUCTION DOCUMENTS FOR ADDITIONAL FRAMING MEMBERS REQUIRED.

KEY PLAN

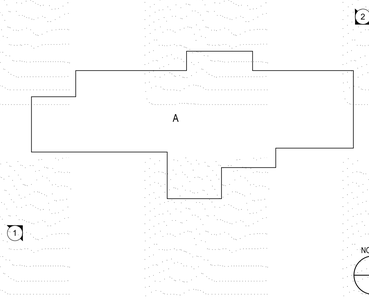

NORTH

IDENTIFICATION STAMP
DIV. OF THE STATE ARCHITECT
APP: 02-118630 INC:
REVIEWED FOR
SS ☐ FLS ☐ ACS ☑
DATE: 04/13/2021

OFFICE OF THE STATE FIRE MARSHAL
APPROVED FIRE AND PANIC ONLY
Approval of this plan does not authorize or approve any omission or deviation from applicable regulations. Final approval is subject to field inspection. One set of approved plans shall be available on the project site at all times.
PERMIT NO. 20-N-2332-CP
REVIEWED BY: LEO CATAYLO, OSFM
DATE: 4 / /2021

DGS GENERAL SERVICES
Department of General Services
State of California
Real Estate Services Division
Project Management & Development Branch
707 Third Street, Suite 4-105
West Sacramento, California 95605

NICHOLS MELBURG & ROSSETTO
ARCHITECTS + ENGINEERS
300 Knollcrest Drive
Redding, CA 96002
(530) 222-3300 (530) 222-3538 FAX
http://www.nmrdesign.com

Copyright © 2021
All ideas, designs, arrangements and plans indicated or represented by this drawing are owned by, and the property of, NICHOLS, MELBURG and ROSSETTO and were created, evolved and developed for use on, and in conjunction with, the specified project. None of such ideas, designs, arrangements or plans shall be used by, or disclosed to any person, firm or corporation for any purpose whatsoever without the written permission of NICHOLS, MELBURG and ROSSETTO.

LICENSE STAMPS

REGISTERED PROFESSIONAL ENGINEER — CONNOR E. HUNTINGFORD — No. S47889 — STRUCTURAL — STATE OF CALIFORNIA
3/19/2021

STRUCTURAL CONSULTANT

LIONAKIS
1919 Nineteenth Street
Sacramento CA 95811
P 916.558.1900 F 916.558.1919
www.lionakis.com

DRAWING STATUS
CONSTRUCTION DOCUMENTS

ISSUE

No.	Date	Description
1	10/22/2020	INITIAL PLAN REVIEW
2	01/08/2021	AGENCY RESUBMITTAL
3	03/22/2021	AGENCY RESUBMITTAL

If drawing is not 30" x 42" it is a reduced print

PROJECT
RESIDENTIAL CENTER, UKIAH: REPLACEMENT OF EXISTING RESIDENTIAL CENTER
440 EAST HILL ROAD
WILLITS, CALIFORNIA 95490
MENDOCINO COUNTY
CALIFORNIA CONSERVATION CORP

Supervisor	Designed	Drawn
		Author

DSA Application No.
02-118630

SHEET TITLE
ADMINISTRATION 3D VIEWS

DGS Project Number	Lionakis Project Number
00000000001826	018322

Reference North | Sheet Scale: 12" = 1'-0"

Sheet Number
S211A

ISSUE DATE
July 9, 2021

Plot Date: 3/19/2021 11:20:16 AM
File Name: BIM 360://CCC Willits Residential Center/018322_S-MASTER_R18_CENTRAL.rvt

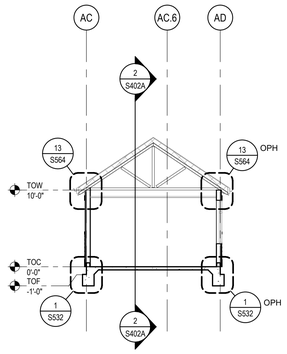

1 BLDG A - BUILDING SECTION
SCALE 1/8" = 1'-0"

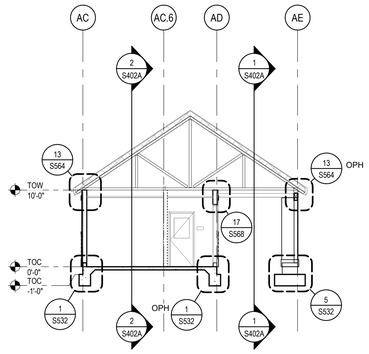

2 BLDG A - BUILDING SECTION
SCALE 1/8" = 1'-0"

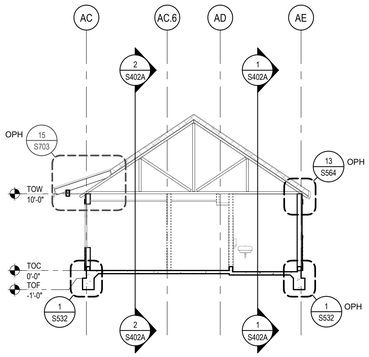

3 BLDG A - BUILDING SECTION
SCALE 1/8" = 1'-0"

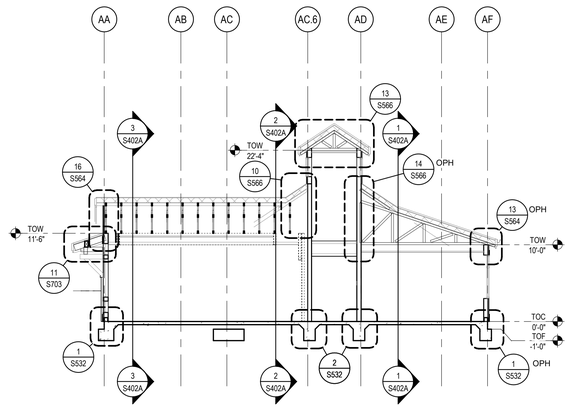

4 BLDG A - BUILDING SECTION
SCALE 1/8" = 1'-0"

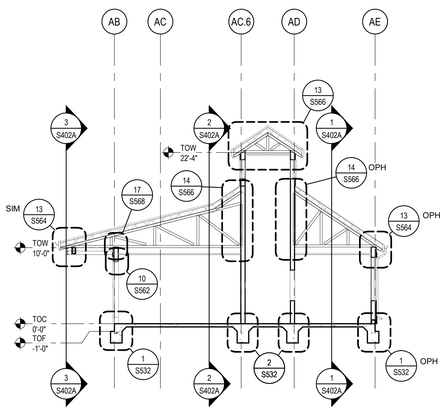

5 BLDG A - BUILDING SECTION
SCALE 1/8" = 1'-0"

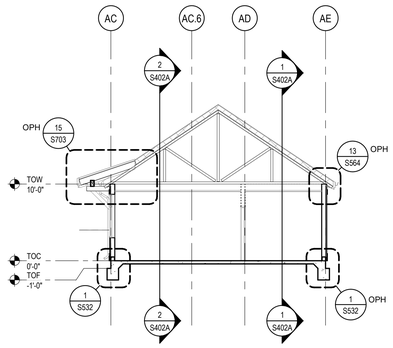

6 BLDG A - BUILDING SECTION
SCALE 1/8" = 1'-0"

IDENTIFICATION STAMP
DIV. OF THE STATE ARCHITECT
APP: 02-118630 INC:
REVIEWED FOR
SS ☐ FLS ☐ ACS ☑
DATE: 04/13/2021

OFFICE OF THE STATE FIRE MARSHAL
APPROVED FIRE AND PANIC ONLY
Approval of this plan does not authorize or approve any omission or deviation from applicable regulations. Final approval is subject to field inspection. One set of approved plans shall be available on the project site at all times.
PERMIT NO. 20-N-2332-CP
REVIEWED BY: LEO CATAYLO, OSFM
DATE: 4 / /2021

GENERAL SERVICES
Department of General Services
State of California
Real Estate Services Division
Project Management & Development Branch
707 Third Street, Suite 4-105
West Sacramento, California 95605

NICHOLS MELBURG & ROSSETTO
ARCHITECTS + ENGINEERS
300 Knollcrest Drive
Redding, CA 96002
(530) 222-3300 (530) 222-3538 FAX
http://www.nmrdesign.com

Copyright © 2021
All ideas, designs, arrangements and plans indicated or represented by this drawing are owned by, and the property of, NICHOLS, MELBURG and ROSSETTO and were created, evolved and developed for use on, and in conjunction with, the specified project. None of such ideas, designs, arrangements or plans shall be used by, or disclosed to any person, firm or corporation for any purpose whatsoever without the written permission of NICHOLS, MELBURG and ROSSETTO.

LICENSE STAMPS

REGISTERED PROFESSIONAL ENGINEER
HARDIN E. HUNTINGTON
No. S4709
STRUCTURAL
STATE OF CALIFORNIA
04/19/2021

STRUCTURAL CONSULTANT

LIONÄKIS
1919 Nineteenth Street
Sacramento CA 95811
P 916.558.1900 F 916.558.1919
www.lionakis.com

DRAWING STATUS
CONSTRUCTION DOCUMENTS

ISSUE

No.	Date	Description
1	10/22/2020	INITIAL PLAN REVIEW
2	01/08/2021	AGENCY RESUBMITTAL
3	03/22/2021	AGENCY RESUBMITTAL

If drawing is not 30" x 42" it is a reduced print

PROJECT
RESIDENTIAL CENTER, UKIAH: REPLACEMENT OF EXISTING RESIDENTIAL CENTER
440 EAST HILL ROAD
WILLITS, CALIFORNIA 95490
MENDOCINO COUNTY
CALIFORNIA CONSERVATION CORP

Supervisor	Designed	Drawn
		Author

DSA Application No.
02-118630

SHEET TITLE
ADMINISTRATION STRUCTURAL BUILDING SECTIONS

DGS Project Number: 00000000001826
Lionakis Project Number: 018322

Reference North
Sheet Scale: 1/8" = 1'-0"
Sheet Number: S401A

ISSUE DATE
July 9, 2021

KEY PLAN

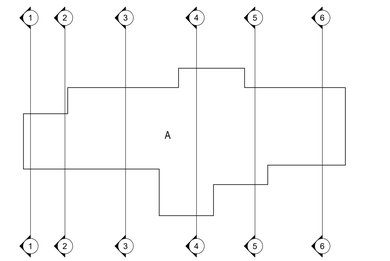

Plot Date: 3/19/2021 11:23:13 AM
File Name: BIM 360://CCC Willits Residential Center/018322_S-MASTER_R18_CENTRAL.rvt

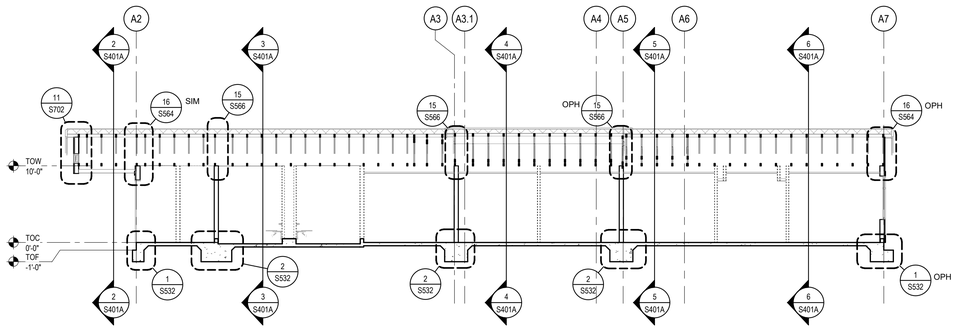

1 BLDG A - BUILDING SECTION

SCALE 1/8" = 1'-0"

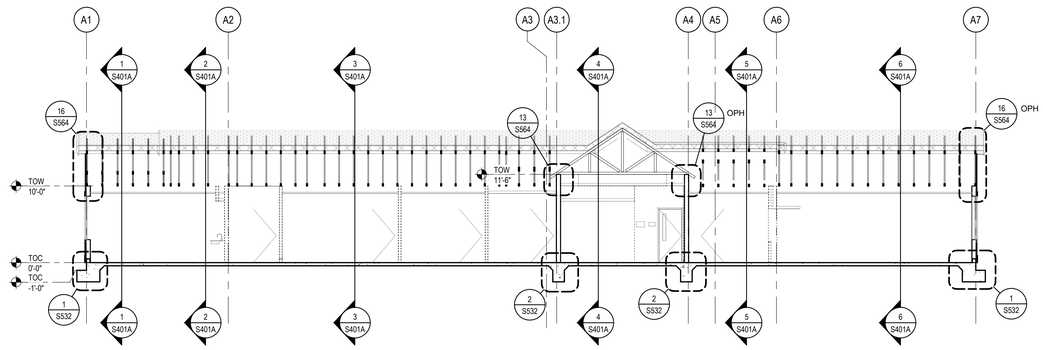

2 BLDG A - BUILDING SECTION

SCALE 1/8" = 1'-0"

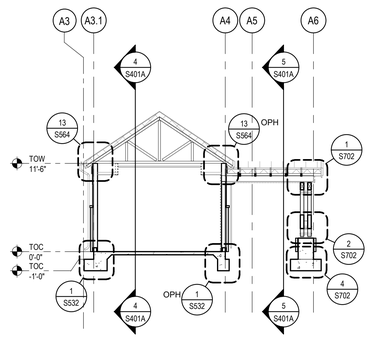

3 BLDG A - BUILDING SECTION

SCALE 1/8" = 1'-0"

KEY PLAN

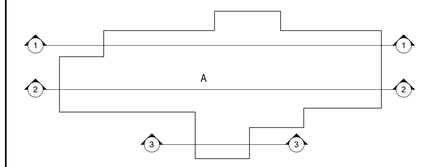

NORTH

IDENTIFICATION STAMP
DIV. OF THE STATE ARCHITECT
APP: 02-118630 INC:
REVIEWED FOR
SS ☐ FLS ☐ ACS ☑
DATE: 04/13/2021

OFFICE OF THE STATE FIRE MARSHAL
APPROVED FIRE AND PANIC ONLY
Approval of this plan does not authorize or approve any omission or deviation from applicable regulations. Final approval is subject to field inspection. One set of approved plans shall be available on the project site at all times.
PERMIT NO. 20-N-2332-CP
REVIEWED BY: LEO CATAYLO, OSFM
DATE: 4 / /2021

DGS GENERAL SERVICES
Department of General Services
State of California
Real Estate Services Division
Project Management & Development Branch
707 Third Street, Suite 4-105
West Sacramento, California 95605

NICHOLS MELBURG & ROSSETTO
ARCHITECTS + ENGINEERS
300 Knollcrest Drive
Redding, CA 96002
(530) 222-3300 (530) 222-3538 FAX
http://www.nmrdesign.com

Copyright © 2021
All ideas, designs, arrangements and plans indicated or represented by this drawing are owned by, and the property of, NICHOLS, MELBURG and ROSSETTO and were created, evolved and developed for use on, and in conjunction with, the specified project. None of such ideas, designs, arrangements or plans shall be used by, or disclosed to any person, firm or corporation for any purpose whatsoever without the written permission of NICHOLS, MELBURG and ROSSETTO.

LICENSE STAMPS

REGISTERED PROFESSIONAL ENGINEER SIMON E. HUNTINGFORD No. S4758 STRUCTURAL OF CALIFORNIA
3/19/2021

STRUCTURAL CONSULTANT

LIONAKIS

1919 Nineteenth Street
Sacramento CA 95811
P 916.558.1900 F 916.558.1919
www.lionakis.com

DRAWING STATUS
CONSTRUCTION DOCUMENTS

ISSUE

No.	Date	Description
1	10/22/2020	INITIAL PLAN REVIEW
2	01/08/2021	AGENCY RESUBMITTAL
3	03/22/2021	AGENCY RESUBMITTAL

If drawing is not 30" x 42" it is a reduced print

PROJECT
RESIDENTIAL CENTER, UKIAH: REPLACEMENT OF EXISTING RESIDENTIAL CENTER
440 EAST HILL ROAD
WILLITS, CALIFORNIA 95490
MENDOCINO COUNTY
CALIFORNIA CONSERVATION CORP

Supervisor	Designed	Drawn
		Author

DSA Application No.
02-118630

SHEET TITLE
ADMINISTRATION STRUCTURAL BUILDING SECTIONS

DGS Project Number 000000000001826
Lionakis Project Number 018322

Reference North
Sheet Scale: 1/8" = 1'-0"
Sheet Number S402A

ISSUE DATE
July 9, 2021

Plot Date: 3/19/2021 11:29:50 AM
File Name: BIM 360://CCC Willits Residential Center/018322_S-MASTER_R18_CENTRAL.rvt

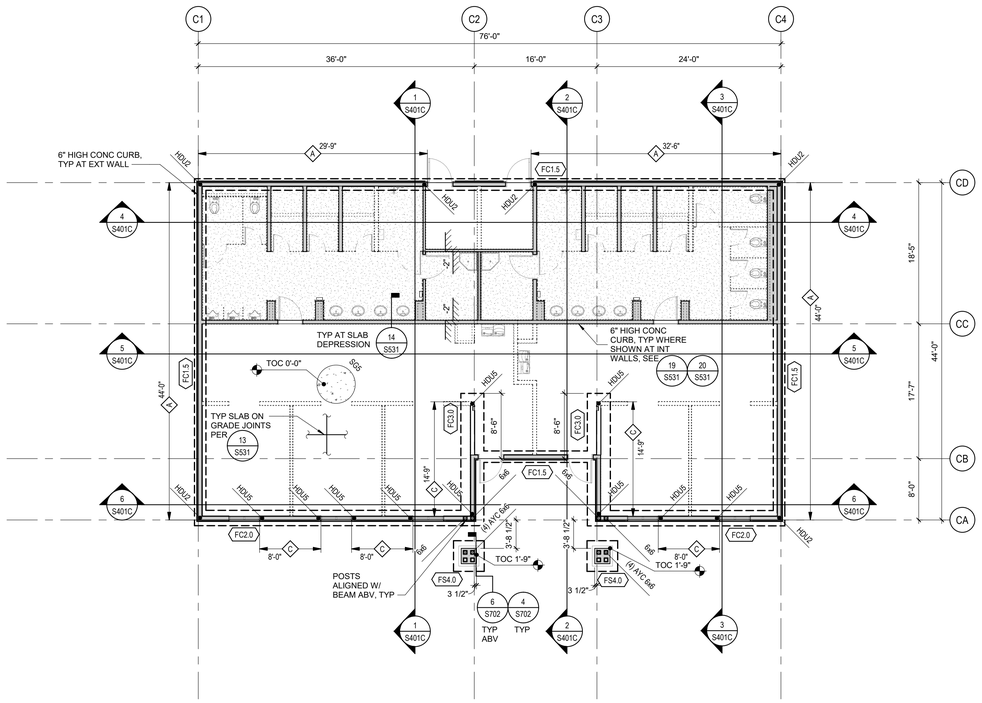

1 COMET BUILDING FLOOR PLAN

SCALE 1/8" = 1'-0"

PLAN NORTH

SHEAR WALL SCHEDULE

S- 060600. N001A
170126. Q2

WALL MARK	SP EDGE NAILING	SILL PLATE THICKNESS	STUDS OR BLKG AT PANEL EDGES	SILL PLATE ANCHORAGE		STRUCTURAL PANEL 15/32" STRUCT I
				AB'S TO CONC	NAILS TO WOOD FRAMING	
A	8D @ 6" OC	2X	2X	5/8" DIA @ 48" OC	16D @ 6" OC	ONE SIDE
B	8D @ 4" OC	3X	3X	5/8" DIA @ 40" OC	SEE SECTIONS AND DETAILS	ONE SIDE
C	8D @ 3" OC	3X	3X	5/8" DIA @ 32" OC		ONE SIDE
D	8D @ 2" OC	3X	3X	5/8" DIA @ 24" OC		ONE SIDE
E	8D @ 4" OC	3X	3X	5/8" DIA @ 16" OC		BOTH SIDES
F	8D @ 3" OC	3X	3X	5/8" DIA @ 8" OC		BOTH SIDES
G	10D @ 2" OC	3X	3X	5/8" DIA @ 8" OC		BOTH SIDES

1. SEE 18/S563 FOR TYP SHEAR WALL SP LAYOUT.
2. EDGE NAILING OCCURS AT EVERY PANEL EDGE. FIELD NAILING SHALL BE 8D @ 12" OC, EXCEPT AT TYPE G FIELD NAILING SHALL BE 10D @ 12" OC.
3. NAILS SHALL BE STEEL WIRE COMMON TYPE OF THE SIZES DENOTED. DRIVE STRUCTURAL PANEL NAILS SO THAT THE NAIL HEADS ARE FLUSH WITH THE SURFACE OF THE PANEL. DO NOT OVERDRIVE NAILS. STAGGER NAILS AT EACH SIDE OF JOINTS.
4. STRUCTURAL PANELS SHALL HAVE A PANEL SPAN RATING OF 32/16. OSB OR 5-PLY/5-LAYER PLYWOOD.
5. BLOCK PANEL EDGES WITH FULL STUD WIDTH BLOCKING OF THICKNESS SPECIFIED.
6. SILL PLATE NAILING IS TO PARALLEL FRAMING BELOW (WHETHER BLKG OR CONT). PROVIDE (2) ADDITIONAL NAILS OF SIZE SHOWN TO EA PERPENDICULAR FRAMING BELOW.
7. PREDRILL NAIL HOLES IF SPLITTING OCCURS. STAGGER NAILING TO PREVENT SPLITTING.
8. WHERE STRUCTURAL PANELS OCCUR AT BOTH SIDES OF WALL, STAGGER PANEL JOINTS AT EACH FACE SO THEY DO NOT FALL ON THE SAME STUD OR BLOCKING.
9. FA SPACING AT SHEAR WALLS SHALL BE 3X THE EDGE NAIL SPACING FOR ONE-SIDED SHEAR WALLS, AND 6" OC FOR WALLS WITH STRUCTURAL PANELS ON BOTH SIDES.
10. PROVIDE STRUCTURAL PANELS FULL LENGTH AND HEIGHT OF ALL EXTERIOR WALLS AND AT INTERIOR WALLS AS SHOWN ON SECTIONS AND DETAILS. MINIMUM STRUCTURAL PANEL NAILING SHALL BE TYPE A UNO. SEE PLANS FOR HEAVIER NAILING LOCATIONS NOTED BY WALL MARKS THUS:

NOTES

170828. Q2

1. SEE S000 SERIES SHEETS FOR GENERAL NOTES & S500 SERIES SHEETS FOR TYPICAL DETAILS.
2. DIMENSIONS ARE TO FOS OR CENTERLINE OF COLUMNS/POSTS, UNO. SEE SECTIONS & DETAILS FOR FOC LOCATIONS RELATIVE TO FOS.
3. SEE ARCH & OTHER CONSULTANT DWGS FOR DIMENSIONS & LOCATIONS OF WALL OPENINGS.
4. SEE ARCH DWGS FOR DIMENSIONS OF SLAB DEPRESSIONS & SLOPED SLABS.
5. SEE ARCH & OTHER CONSULTANT DWGS FOR PENETRATIONS NOT SHOWN. COMPLY WITH TYPICAL DETAILS.
6. SEE CIVIL DRAWINGS AND SPECIFICATIONS FOR ENGINEERED FILL.
7. EXTERIOR CONCRETE FLATWORK IS NOT SHOWN, SEE CIVIL & ARCH DWGS.
8. CONTINUOUS WALL FOOTINGS TO BE CENTERED UNDER WALLS AND PAD FOOTINGS TO BE CENTERED UNDER COLUMNS, TYP UNO.
9. TOP OF FOOTINGS SHALL BE 1'-0" BELOW FINISHED FLOOR (TOF -1'-0"), TYP UNO. SEE ARCH & OTHER CONSULTANT DRAWINGS FOR UTILITIES THAT WILL AFFECT FOOTINGS AND COMPLY WITH TYPICAL DETAILS.
10. CONTINUOUS FOOTINGS ARE FC1.5, TYP UNO. SEE SCHEDULE FOR CONTINUOUS FOOTING SIZE & REINF.
11. CONCRETE SLAB OVER SUB BASE SHALL BE SG5, TYP UNO. SEE SCHEDULE FOR MORE INFORMATION.
12. EXTERIOR WALLS ARE 2x6 STUDS @ 16" OC, TYP UNO.
13. TOC = 0'-0" TYP UNO (SEE CIVIL DRAWINGS FOR DATUM ELEVATION).

SCHEDULES

DECK SCHEDULE

TYPE	DESCRIPTION
SG5	5" CONC W/ #4 @ 16" OC EA WAY CENTERED IN SLAB O/ VAPOR RETARDER O/ 4" FREE DRAINING CRUSHED ROCK
SG12	12" CONC W/ #4 @ 16" OC T&B EA WAY O/ VAPOR RETARDER O/ 4" FREE DRAINING CRUSHED ROCK

CONTINUOUS FOOTING SCHEDULE

TYPE	WIDTH	DEPTH	REINFORCEMENT
FC1.5	1'-6"	1'-6"	(2) CONT #5 T&B
FC2.0	2'-0"	1'-6"	(3) CONT #5 T&B
FC3.0	3'-0"	1'-6"	(4) CONT #5 T&B AND #4 TIES @ 18" OC
FC3.1	3'-0"	2'-0"	(4) CONT #5 T&B AND #4 TIES @ 18" OC
FC4.0	4'-0"	1'-6"	(5) CONT #5 T&B AND #4 TIES @ 18" OC
FC4.1	4'-0"	2'-0"	(5) CONT #5 T&B AND #4 TIES @ 18" OC

SPREAD FOOTING SCHEDULE

TYPE	SIZE	DEPTH	REINFORCEMENT
FS2.0	2'-0"x2'-0"	1'-6"	(3) #5 EW AT BOT
FS3.0	3'-0"x3'-0"	1'-6"	(4) #5 EW AT BOT
FS4.0	4'-0"x4'-0"	1'-6"	(5) #5 EW AT BOT
FS4.1	4'-0"x4'-0"	2'-0"	(7) #5 EW AT BOT
FS5.0	5'-0"x5'-0"	1'-6"	(7) #5 EW AT BOT
FS5.1	5'-0"x5'-0"	2'-0"	(9) #5 EW AT BOT
FS6.1	6'-0"x4'-0"	1'-6"	#5 @ 12" OC EW AT BOT
FS7.1	7'-0"x7'-0"	2'-0"	(9) #6 EW AT BOT

LEGEND

170828. Q1

- (E) ELEMENTS SHOWN FADED - LINETYPE AND PATTERN/HATCHING AS NOTED FOR NEW CONSTRUCTION
- STRUCTURAL WALL, SEE 10/S561
- NON-STRUCTURAL WALL, SAD, FOR ATTACHMENT, SEE 4/S561 10/S561
- CONCRETE CURB OR PAD
- DEPRESSED SLAB AREA
- SAD FOR EXTENTS
- SLAB STEP SYMBOL
- -2" ELEVATION RELATIVE TO TOC
- SOG CONC SLAB / PLYWOOD / CLT DECK (SOLID LINE INDICATED SPAN OF DIRECTION OF CLT)
- COL SIZE COLUMN WITH CALLOUT
- HD SIZE POST SIZE HOLDOWN & REQUIRED POST, SEE 16/S563
- A SHEAR WALL TYPE, SEE "SHEAR WALL SCHEDULE"
- FCX.X CONTINUOUS FOOTING TAG
- FSX.X SPREAD FOOTING TAG
- FOOTING
- S S STEPPED FOOTING

KEY PLAN

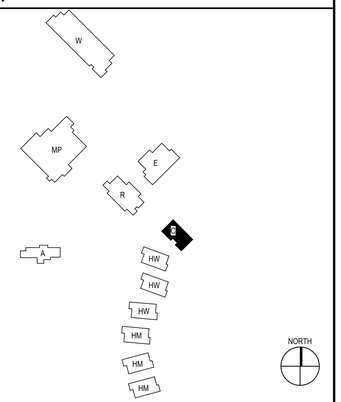

IDENTIFICATION STAMP
DIV. OF THE STATE ARCHITECT
APP: 02-118630 INC:
REVIEWED FOR
SS ☐ FLS ☐ ACS ☑
DATE: 04/13/2021

OFFICE OF THE STATE FIRE MARSHAL
APPROVED FIRE AND PANIC ONLY
Approval of this plan does not authorize or approve any omission or deviation from applicable regulations. Final approval is subject to field inspection. One set of approved plans shall be available on the project site at all times.
PERMIT NO: 20-N-2332-CP
REVIEWED BY: LEO CATAYLO, OSFM
DATE: 4 / /2021

DGS GENERAL SERVICES
Department of General Services
State of California
Real Estate Services Division
Project Management & Development Branch
707 Third Street, Suite 4-105
West Sacramento, California 95605

NICHOLS MELBURG & ROSSETTO ARCHITECTS + ENGINEERS
300 Knollcrest Drive
Redding, CA 96002
(530) 222-3300 (530) 222-3538 FAX
http://www.nmrdesign.com

Copyright © 2021
All ideas, designs, arrangements and plans indicated or represented by this drawing are owned by, and the property of, NICHOLS, MELBURG and ROSSETTO and were created, evolved and developed for use on, and in conjunction with, the specified project. None of such ideas, designs, arrangements or plans shall be used by, or disclosed to any person, firm or corporation for any purpose whatsoever without the written permission of NICHOLS, MELBURG and ROSSETTO.

LICENSE STAMPS

REGISTERED PROFESSIONAL ENGINEER JORDEN E. HUNTINGTON No. S-17580 STRUCTURAL STATE OF CALIFORNIA
3/19/2021

STRUCTURAL CONSULTANT

LIONAKIS
1919 Nineteenth Street
Sacramento CA 95811
P 916.558.1900 F 916.558.1919
www.lionakis.com

DRAWING STATUS
CONSTRUCTION DOCUMENTS

ISSUE

No.	Date	Description
1	10/22/2020	INITIAL PLAN REVIEW
2	01/08/2021	AGENCY RESUBMITTAL
3	03/22/2021	AGENCY RESUBMITTAL

If drawing is not 30" x 42" it is a reduced print

PROJECT
RESIDENTIAL CENTER, UKIAH: REPLACEMENT OF EXISTING RESIDENTIAL CENTER
440 EAST HILL ROAD
WILLITS, CALIFORNIA 95490
MENDOCINO COUNTY
CALIFORNIA CONSERVATION CORP

Supervisor	Designed	Drawn
		Author

DSA Application No.
02-118630

SHEET TITLE
COMET FOUNDATION PLAN

DGS Project Number	Lionakis Project Number
000000000001826	018322

Reference North: NORTH
Sheet Scale: As indicated
Sheet Number: S201C

ISSUE DATE
July 9, 2021

Plot Date: 3/19/2021 11:19:49 AM
File Name: BIM 360://CCC Willits Residential Center/018322_S-MASTER_R18_CENTRAL.rvt

TRUSS SCHEDULE	
DESIGNATION	TRUSS CONFIGURATION
T-C1	CA, CD; 12/8, 12/8; CAP TRUSS AS REQ BY MFR, SEE 6/S564; COLLECTOR TRUSS P_{LAT} = SEE PLAN
T-C2	CB, CD; 12/8, 12/8; CAP TRUSS AS REQ BY MFR, SEE 6/S564
T-C3	12/8, 12/8; DORMER WALL, WHERE OCCURS, SEE PLAN

NOTES:
1. TRUSS CONFIGURATIONS SHOWN ARE A DIAGRAMATIC OUTLINE INDICATING BEARING SUPPORTS. TRUSS WEB MEMBERS ARE NOT SHOWN AND MAY VARY BETWEEN TRUSS MANUFACTURERS.
2. REFER TO "METAL-PLATE WOOD TRUSSES" NOTES ON SHEET S012 FOR TRUSS DESIGN AND DETAILING REQUIREMENTS.
3. MANUFACTURED ROOF TRUSS LOADS AS SHOWN ON PLAN ARE UNFACTORED DESIGN LOADS. WIND AND SEISMIC LOADS ARE LRFD DESIGN LEVEL FORCES. LOADS SHOWN ON PLAN ARE IN ADDITION TO THE TRUSS DESIGN/LOADING AND DETAILING REQUIREMENTS ON SHEET S012.
4. BEARING POINTS ARE SHOWN AT GRIDS, SEE DETAILS FOR FACE OF STUD RELATIVE TO BEARING LENGTH AND LOCATION. SEE DETAILS FOR WHERE LEDGERS, TRUSS HANGERS OR BEAMS ARE USED AS BEARING POINTS.
5. PROVIDE DIAPHRAGM BOUNDARY NAILING PATTERN AT COLLECTOR TRUSSES, UNO.

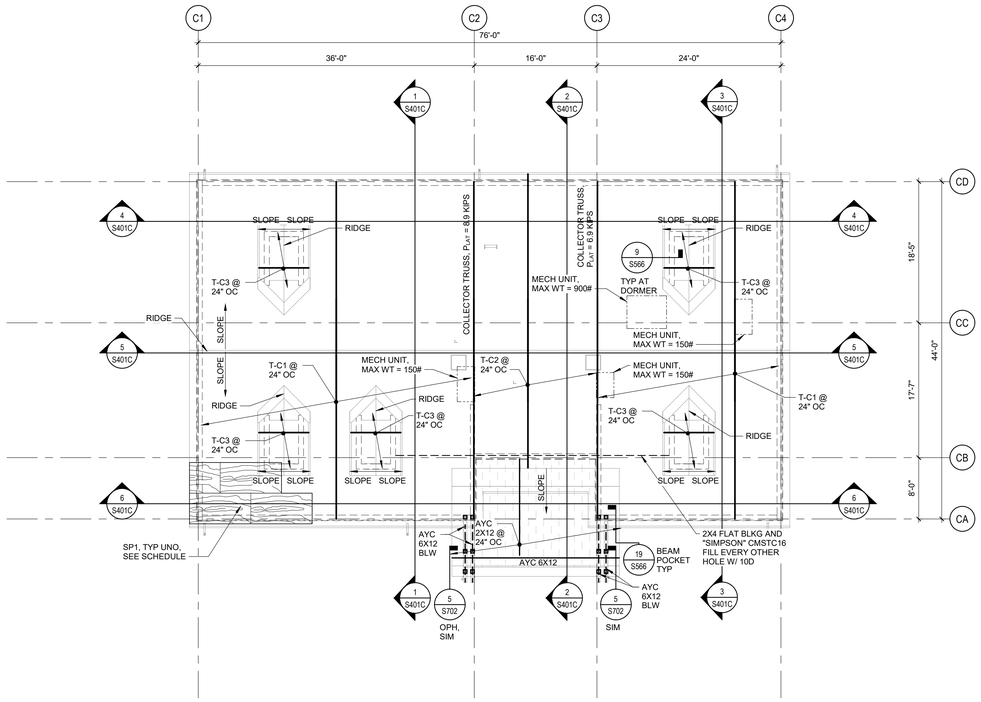

1 COMET BUILDING ROOF FRAMING PLAN

SCALE 1/8" = 1'-0"

PLAN NORTH

NOTES

S- 010000 N001A
170828. Q2

1. SEE S000 SERIES SHEETS FOR GENERAL NOTES & S500 SERIES SHEETS FOR TYPICAL DETAILS.
2. SEE S200 SERIES SHEETS FOR WALL & FRAMING ELEVATIONS.
3. DIMENSIONS ARE TO FOS OR CENTERLINE OF COLUMNS/POSTS, UNO.
4. SEE ARCH & OTHER CONSULTANT DWGS FOR DIMENSIONS & LOCATIONS OF WALL OPENINGS. SEE TYPICAL DETAILS FOR FRAMING AT OPENINGS.
5. SEE ARCH & OTHER CONSULTANT DWGS FOR ROOF PENETRATIONS NOT SHOWN. PROVIDE FRAMING AROUND OPENINGS PER TYPICAL DETAILS. SAWCUT OR CORE DRILL CLEAN HOLES WITH NO OVERCUTTING. CONFORM WITH TYPICAL DETAILS.
6. SEE ARCH DWGS FOR DIMENSIONS OF ROOF OVERHANGS, UNO.
7. EXTERIOR WALLS ARE 2x6 STUDS @ 16" OC, TYP UNO.
8. PROVIDE STRUCTURAL PANEL EDGE NAILING TO THE FULL LENGTH OF ALL GLB's, AND MANUFACTURED TRUSSES, I-JOISTS, RIM JOISTS AND BLOCKING AT SHEAR WALLS. SEE PLANS FOR LOCATIONS WHERE DOUBLE ROWS OF EDGE NAILING OCCUR.
9. CAMBER IN GLU-LAM BEAMS SHALL BE 1600' RADIUS, TYP UNO.
10. SEE S-000 SHEETS FOR MANUFACTURED ROOF TRUSS DESIGN CRITERIA.
11. AT EXTERIOR EXPOSED WOOD PROVIDE ALASKAN YELLOW CEDAR, REFER TO DETAILS.

SP NAILING SCHEDULE

S- 061100 N001A
170126. Q2

WOOD STRUCTURAL PANEL NAILING SCHEDULE (UNO)	
- PROVIDE 1/8" SPACE BETWEEN SHEETS FOR ALL SP SHEATHING. - MIN SHEET WIDTH SHALL BE 24" FOR ROOF & FLOOR, 12" FOR WALLS. - SEE 17/S563 FOR TYP STRUCTURAL PANEL LAYOUT.	
SP1 - 19/32" STRUCT I SP, APA SPAN RATED 40/20 ARRANGE SHEETS AS SHOWN ON ROOF FRAMING PLAN	
EN AT PERIMETER OF EA SHEET FN AT INTERIOR CONTACTS OF EA SHEET BN AT PERIMETER OF ROOF	8D @ 6" OC 8D @ 12" OC 8D @ 6" OC
THIS DIAPHRAGM IS NOT DESIGNED AS A BLOCKED DIAPHRAGM. SIDE JOINTS SHALL BE SUPPORTED PER 17/S563.	

LEGEND

180821
Q1

- (E) ELEMENTS SHOWN FADED - LINETYPE AND PATTERN/HATCHING AS NOTED FOR NEW CONSTRUCTION
- STRUCTURAL WALL, SEE 10/S561
- NON-STRUCTURAL WALL, SAD, FOR ATTACHMENT, SEE 4/S561, 10/S561
- CONCRETE CURB OR PAD
- DEPRESSED SLAB AREA
- SAD FOR EXTENTS
- SLAB STEP SYMBOL
- -2" ELEVATION RELATIVE TO TOC
- SL CT CL — CONC SLAB / PLYWOOD / CLT DECK (SOLID LINE INDICATED SPAN OF DIRECTION OF CLT)
- COL SIZE / HD SIZE / POST SIZE — COLUMN WITH CALLOUT
- HOLDOWN & REQUIRED POST, SEE 16/S563
- A — SHEAR WALL TYPE, SEE "SHEAR WALL SCHEDULE"
- W24X55 — BEAM SIZE
- C=2" — BEAM CAMBER
- S — BEAM SPLICE
- TRUSS W/ SUPERIMPOSED LOADS

KEY PLAN

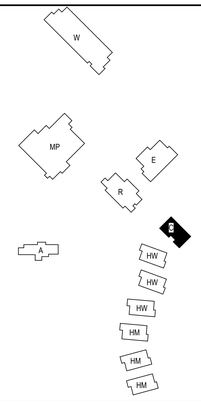

IDENTIFICATION STAMP
DIV. OF THE STATE ARCHITECT
APP: 02-118630 INC:
REVIEWED FOR
SS ☐ FLS ☐ ACS ☑
DATE: 04/13/2021

OFFICE OF THE STATE FIRE MARSHAL
APPROVED FIRE AND PANIC ONLY
Approval of this plan does not authorize or approve any omission or deviation from applicable regulations. Final approval is subject to field inspection. One set of approved plans shall be available on the project site at all times.
PERMIT NO. 20-N-2332-CP
REVIEWED BY: LEO CATAYLO, OSFM
DATE: 4 / /2021

DGS GENERAL SERVICES
Department of General Services
State of California
Real Estate Services Division
Project Management & Development Branch
707 Third Street, Suite 4-105
West Sacramento, California 95605

NICHOLS MELBURG & ROSSETTO ARCHITECTS + ENGINEERS
300 Knollcrest Drive
Redding, CA. 96002
(530) 222-3300 (530) 222-3538 FAX
http://www.nmrdesign.com

Copyright © 2021
All ideas, designs, arrangements and plans indicated or represented by this drawing are owned by, and the property of, NICHOLS, MELBURG and ROSSETTO and were created, evolved and developed for use on, and in conjunction with, the specified project. None of such ideas, designs, arrangements or plans shall be used by, or disclosed to any person, firm or corporation for any purpose whatsoever without the written permission of NICHOLS, MELBURG and ROSSETTO.

LICENSE STAMPS

REGISTERED PROFESSIONAL ENGINEER — GEORGE E. HUNTINGFORD — No. S47589 — CIVIL — STATE OF CALIFORNIA
3/19/2021

STRUCTURAL CONSULTANT

LIONAKIS
1919 Nineteenth Street
Sacramento CA 95811
P 916.558.1900 F 916.558.1919
www.lionakis.com

DRAWING STATUS
CONSTRUCTION DOCUMENTS

ISSUE

No.	Date	Description
1	10/22/2020	INITIAL PLAN REVIEW
2	01/08/2021	AGENCY RESUBMITTAL
3	03/22/2021	AGENCY RESUBMITTAL

If drawing is not 30" x 42" it is a reduced print

PROJECT
RESIDENTIAL CENTER, UKIAH: REPLACEMENT OF EXISTING RESIDENTIAL CENTER
440 EAST HILL ROAD
WILLITS, CALIFORNIA 95490
MENDOCINO COUNTY
CALIFORNIA CONSERVATION CORP

Supervisor	Designed	Drawn
		Author

DSA Application No.
02-118630

SHEET TITLE
COMET ROOF FRAMING PLAN

DGS Project Number: 00000000001826
Lionakis Project Number: 018322

Reference North: NORTH
Sheet Scale: As indicated
Sheet Number: S202C

ISSUE DATE
July 9, 2021

Plot Date: 3/19/2021 11:20:17 AM
File Name: BIM 360://CCC Willits Residential Center/018322_S-MASTER_R18_CENTRAL.rvt

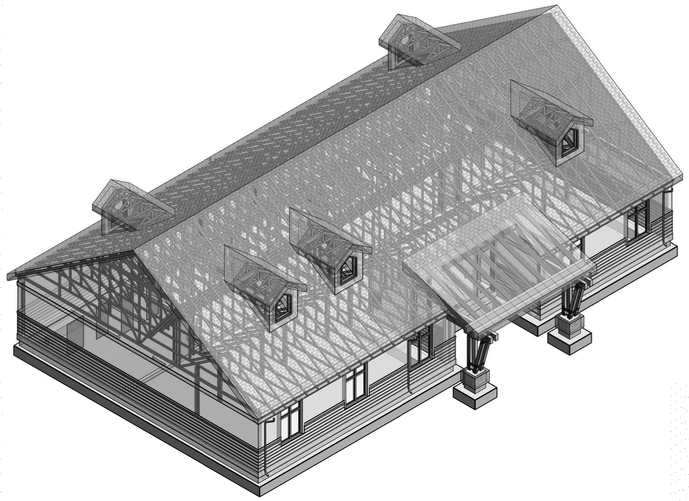

1 BUILDING C - VIEW 1
SCALE

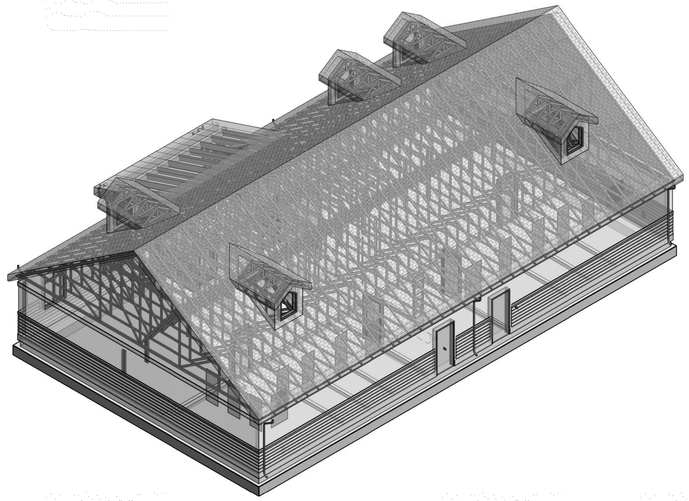

2 BUILDING C - VIEW 2
SCALE

3D VIEW NOTES

170828. Q1

1. FRAMING SHOWN IN THESE VIEWS IS FOR GENERAL INFORMATION ONLY. THE BALANCE OF STRUCTURAL DOCUMENT TAKE PRECEDENCE OVER 3D VIEWS.
2. NOT ALL FRAMING MAY BE SHOWN. SEE CONSTRUCTION DOCUMENTS FOR ADDITIONAL FRAMING MEMBERS REQUIRED.

KEY PLAN

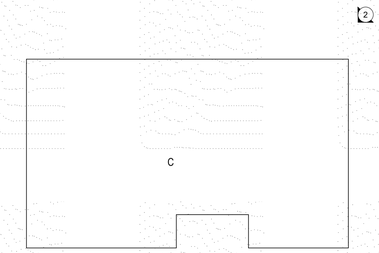

PLAN NORTH

IDENTIFICATION STAMP
DIV. OF THE STATE ARCHITECT
APP: 02-118630 INC:
REVIEWED FOR
SS ☐ FLS ☐ ACS ☑
DATE: 04/13/2021

OFFICE OF THE STATE FIRE MARSHAL
APPROVED FIRE AND PANIC ONLY
Approval of this plan does not authorize or approve any omission or deviation from applicable regulations. Final approval is subject to field inspection. One set of approved plans shall be available on the project site at all times.
PERMIT NO. 20-N-2332-CP
REVIEWED BY: LEO CATAYLO, OSFM
DATE: 4 / /2021

DGS GENERAL SERVICES
Department of General Services
State of California
Real Estate Services Division
Project Management & Development Branch
707 Third Street, Suite 4-105
West Sacramento, California 95605

NICHOLS MELBURG & ROSSETTO
ARCHITECTS + ENGINEERS
300 Knollcrest Drive
Redding, CA 96002
(530) 222-3300 (530) 222-3538 FAX
http://www.nmrdesign.com

Copyright © 2021
All ideas, designs, arrangements and plans indicated or represented by this drawing are owned by, and the property of, NICHOLS, MELBURG and ROSSETTO and were created, evolved and developed for use on, and in conjunction with, the specified project. None of such ideas, designs, arrangements or plans shall be used by, or disclosed to any person, firm or corporation for any purpose whatsoever without the written permission of NICHOLS, MELBURG and ROSSETTO.

LICENSE STAMPS

REGISTERED PROFESSIONAL ENGINEER
JEROME E. HUNTINGFORD
No. S4758
CIVIL STRUCTURAL
STATE OF CALIFORNIA
3/19/2021

STRUCTURAL CONSULTANT

LIONAKIS
1919 Nineteenth Street
Sacramento CA 95811
P 916.558.1900 F 916.558.1919
www.lionakis.com

DRAWING STATUS
CONSTRUCTION DOCUMENTS

ISSUE

No.	Date	Description
1	10/22/2020	INITIAL PLAN REVIEW
2	01/08/2021	AGENCY RESUBMITTAL
3	03/22/2021	AGENCY RESUBMITTAL

If drawing is not 30" x 42" it is a reduced print

PROJECT
RESIDENTIAL CENTER, UKIAH: REPLACEMENT OF EXISTING RESIDENTIAL CENTER
440 EAST HILL ROAD
WILLITS, CALIFORNIA 95490
MENDOCINO COUNTY
CALIFORNIA CONSERVATION CORP

Supervisor	Designed	Drawn
		Author

DSA Application No.
02-118630

SHEET TITLE
COMET 3D VIEWS

DGS Project Number: 00000000001826
Lionakis Project Number: 018322

Reference North: NORTH
Sheet Scale: 12" = 1'-0"
Sheet Number: S211C

ISSUE DATE
July 9, 2021

Plot Date: 3/19/2021 11:20:58 AM
File Name: BIM 360://CCC Willits Residential Center/018322_S-MASTER_R18_CENTRAL.rvt

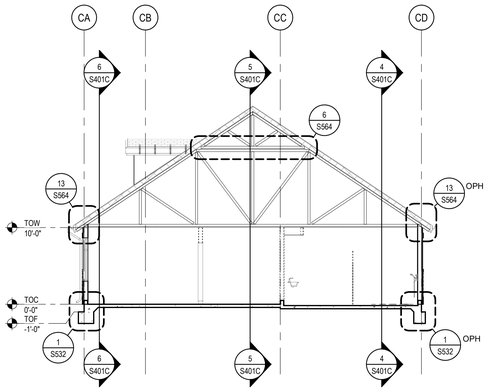

1 BLDG C - BUILDING SECTION

SCALE 1/8" = 1'-0"

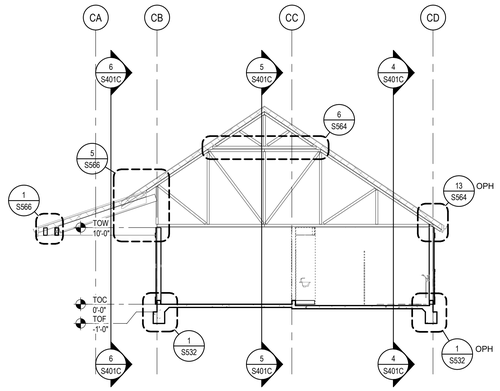

2 BLDG C - BUILDING SECTION

SCALE 1/8" = 1'-0"

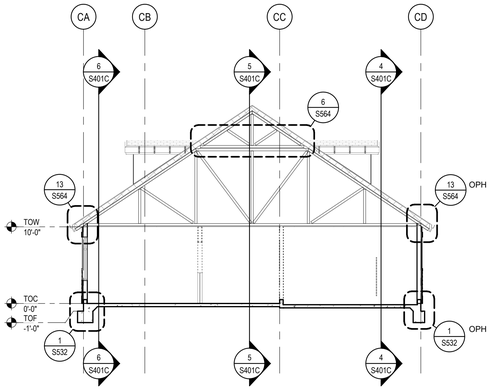

3 BLDG C - BUILDING SECTION

SCALE 1/8" = 1'-0"

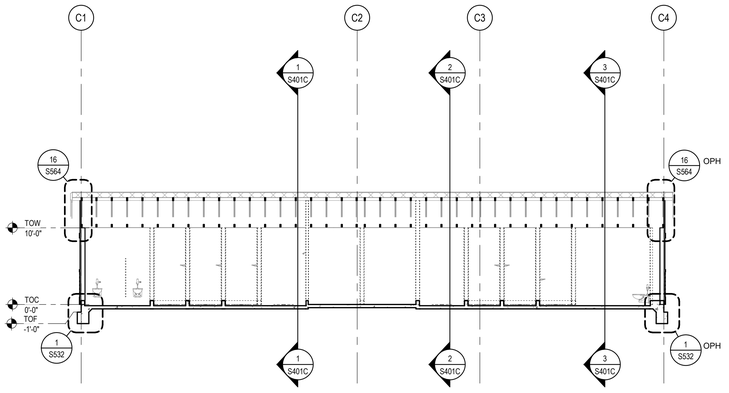

4 BLDG C - BUILDING SECTION

SCALE 1/8" = 1'-0"

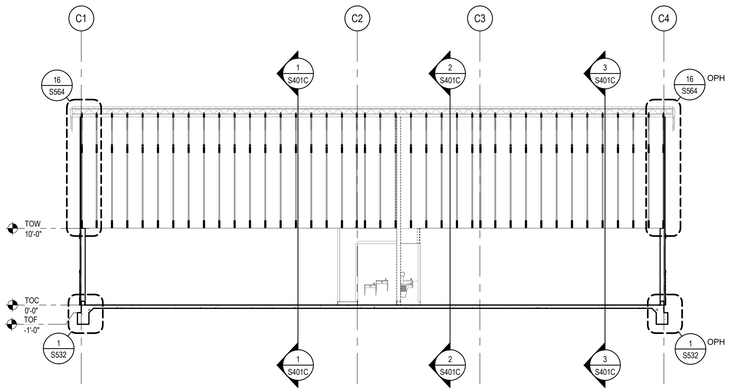

5 BLDG C - BUILDING SECTION

SCALE 1/8" = 1'-0"

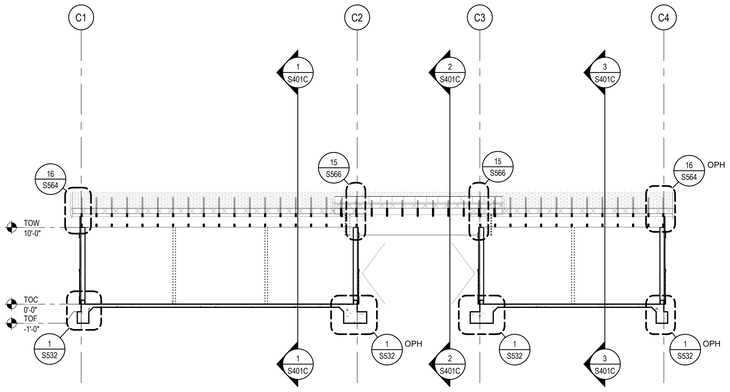

6 BLDG C - BUILDING SECTION

SCALE 1/8" = 1'-0"

KEY PLAN

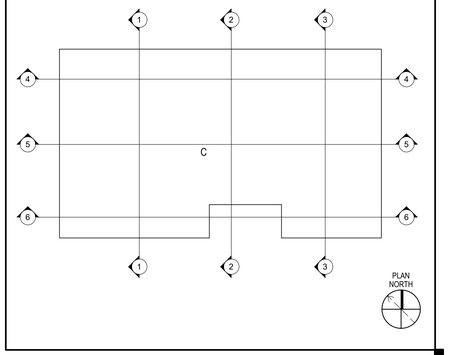

IDENTIFICATION STAMP
DIV. OF THE STATE ARCHITECT
APP: 02-118630 INC:
REVIEWED FOR
SS ☐ FLS ☐ ACS ☑
DATE: 04/13/2021

OFFICE OF THE STATE FIRE MARSHAL
APPROVED FIRE AND PANIC ONLY
Approval of this plan does not authorize or approve any omission or deviation from applicable regulations. Final approval is subject to field inspection. One set of approved plans shall be available on the project site at all times.
PERMIT NO. 20-N-2332-CP
REVIEWED BY: LEO CATAYLO, OSFM
DATE: 4 / /2021

DGS GENERAL SERVICES
Department of General Services
State of California
Real Estate Services Division
Project Management & Development Branch
707 Third Street, Suite 4-105
West Sacramento, California 95605

NICHOLS MELBURG & ROSSETTO
ARCHITECTS + ENGINEERS
300 Knollcrest Drive
Redding, CA 96002
(530) 222-3300 (530) 222-3538 FAX
http://www.nmrdesign.com

Copyright © 2021
All ideas, designs, arrangements and plans indicated or represented by this drawing are owned by, and the property of, NICHOLS, MELBURG and ROSSETTO and were created, evolved and developed for use on, and in conjunction with, the specified project. None of such ideas, designs, arrangements or plans shall be used by, or disclosed to any person, firm or corporation for any purpose whatsoever without the written permission of NICHOLS, MELBURG and ROSSETTO.

LICENSE STAMPS

REGISTERED PROFESSIONAL ENGINEER
SIMON E. HUNTINGTON
No. S4750
STRUCTURAL
STATE OF CALIFORNIA
3/19/2021

STRUCTURAL CONSULTANT

LIONAKIS
1919 Nineteenth Street
Sacramento CA 95811
P 916.558.1900 F 916.558.1919
www.lionakis.com

DRAWING STATUS
CONSTRUCTION DOCUMENTS

ISSUE

No.	Date	Description
1	10/22/2020	INITIAL PLAN REVIEW
2	01/08/2021	AGENCY RESUBMITTAL
3	03/22/2021	AGENCY RESUBMITTAL

If drawing is not 30" x 42" it is a reduced print

PROJECT
RESIDENTIAL CENTER, UKIAH: REPLACEMENT OF EXISTING RESIDENTIAL CENTER
440 EAST HILL ROAD
WILLITS, CALIFORNIA 95490
MENDOCINO COUNTY
CALIFORNIA CONSERVATION CORP

Supervisor	Designed	Drawn
		Author

DSA Application No.
02-118630

SHEET TITLE
COMET STRUCTURAL BUILDING SECTIONS

DGS Project Number	Lionakis Project Number
00000000001826	018322

Reference North: NORTH
Sheet Scale: 1/8" = 1'-0"
Sheet Number: S401C

ISSUE DATE
July 9, 2021

Plot Date: 3/19/2021 11:23:18 AM
File Name: BIM 360://CCC-Willits Residential Center/018322_S-MASTER_R18_CENTRAL.rvt

Plot Date: 3/19/2021 11:19:53 AM
File Name: BIM 360://CCC Willits Residential Center/018322_S-MASTER_R18_CENTRAL.rvt

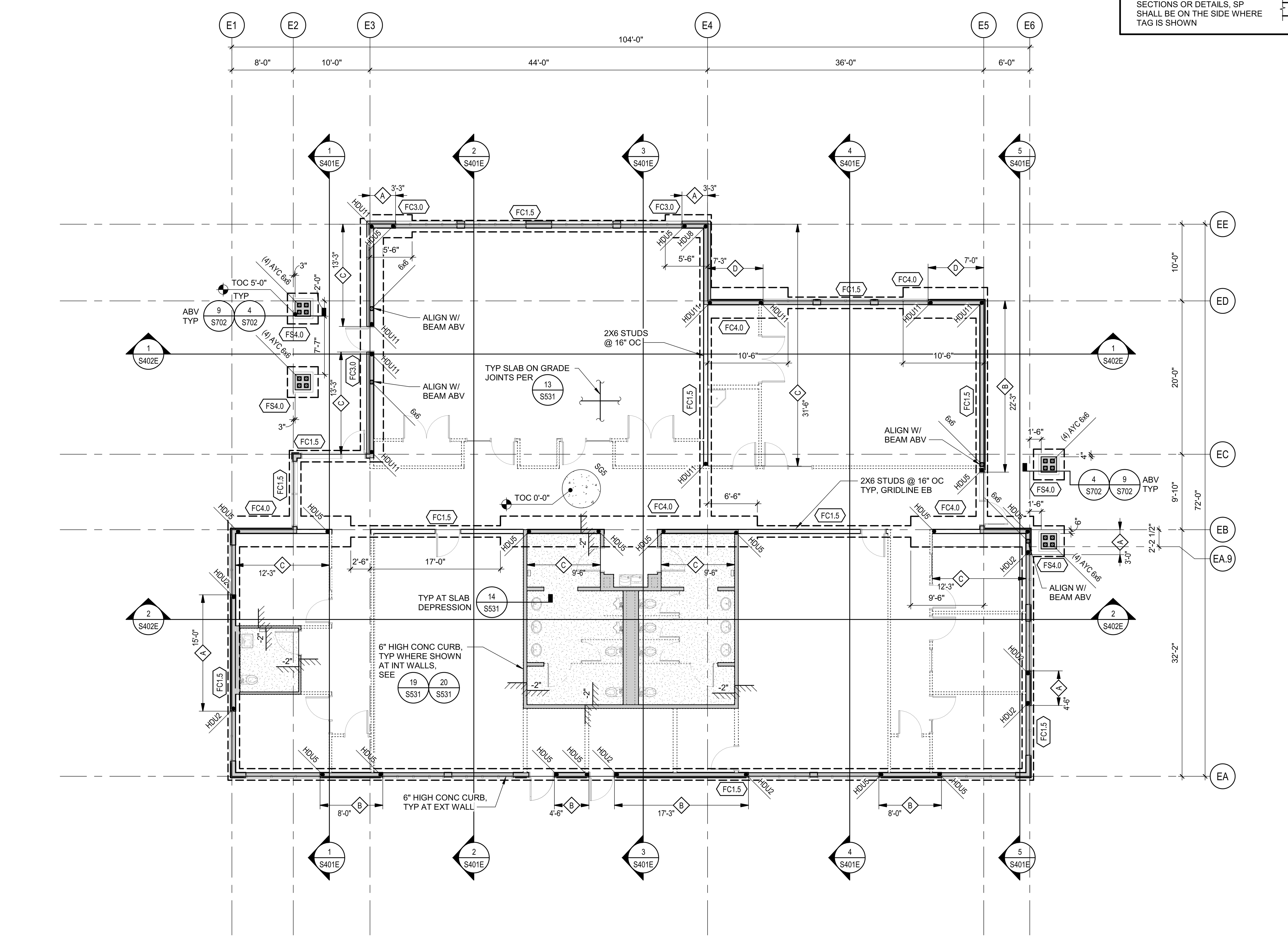

1 EDUCATION BUILDING FLOOR PLAN

SCALE 1/8" = 1'-0"

NORTH

SHEAR WALL SCHEDULE

S- 060600_N001A
170126. Q2

WALL MARK	SP EDGE NAILING	SILL PLATE THICKNESS	STUDS OR BLKG AT PANEL EDGES	SILL PLATE ANCHORAGE		STRUCTURAL PANEL 15/32" STRUCT I
				AB'S TO CONC	NAILS TO WOOD FRAMING	
A	8D @ 6" OC	2X	2X	5/8" DIA @ 48" OC	16D @ 6" OC	ONE SIDE
B	8D @ 4" OC	3X	3X	5/8" DIA @ 40" OC	SEE SECTIONS AND DETAILS	ONE SIDE
C	8D @ 3" OC	3X	3X	5/8" DIA @ 32" OC		ONE SIDE
D	8D @ 2" OC	3X	3X	5/8" DIA @ 24" OC		ONE SIDE
E	8D @ 4" OC	3X	3X	5/8" DIA @ 16" OC		BOTH SIDES
F	8D @ 3" OC	3X	3X	5/8" DIA @ 8" OC		BOTH SIDES
G	10D @ 2" OC	3X	3X	5/8" DIA @ 8" OC		BOTH SIDES

1. SEE 18/S563 FOR TYP SHEAR WALL SP LAYOUT.
2. EDGE NAILING OCCURS AT EVERY PANEL EDGE. FIELD NAILING SHALL BE 8D @ 12" OC, EXCEPT AT TYPE G FIELD NAILING SHALL BE 10D @ 12" OC.
3. NAILS SHALL BE STEEL WIRE COMMON TYPE OF THE SIZES DENOTED. DRIVE STRUCTURAL PANEL NAILS SO THAT THE NAIL HEADS ARE FLUSH WITH THE SURFACE OF THE PANEL. DO NOT OVERDRIVE NAILS. STAGGER NAILS AT EACH SIDE OF JOINTS.
4. STRUCTURAL PANELS SHALL HAVE A PANEL SPAN RATING OF 32/16. OSB OR 5-PLY/5-LAYER PLYWOOD.
5. BLOCK PANEL EDGES WITH FULL STUD WIDTH BLOCKING OF THICKNESS SPECIFIED.
6. SILL PLATE NAILING IS TO PARALLEL FRAMING BELOW (WHETHER BLKG OR CONT). PROVIDE (2) ADDITIONAL NAILS OF SIZE SHOWN TO EA PERPENDICULAR FRAMING BELOW.
7. PREDRILL NAIL HOLES IF SPLITTING OCCURS. STAGGER NAILING TO PREVENT SPLITTING.
8. WHERE STRUCTURAL PANELS OCCUR AT BOTH SIDES OF WALL, STAGGER PANEL JOINTS AT EACH FACE SO THEY DO NOT FALL ON THE SAME STUD OR BLOCKING.
9. FA SPACING AT SHEAR WALLS SHALL BE 3X THE EDGE NAIL SPACING FOR ONE-SIDED SHEAR WALLS, AND 6" OC FOR WALLS WITH STRUCTURAL PANELS ON BOTH SIDES.
10. PROVIDE STRUCTURAL PANELS FULL LENGTH AND HEIGHT OF ALL EXTERIOR WALLS AND AT INTERIOR WALLS AS SHOWN ON SECTIONS AND DETAILS. MINIMUM STRUCTURAL PANEL NAILING SHALL BE TYPE A UNO. SEE PLANS FOR HEAVIER NAILING LOCATIONS NOTED BY WALL MARKS THUS:

MIN LENGTH OF SHEAR WALL SEGMENT (NOT ACTUAL LENGTH)

SEE SECTIONS & DETAILS FOR SIDE OF WALL REQUIRING STRUCTURAL PANELS, UNO ON SECTIONS OR DETAILS, SP SHALL BE ON THE SIDE WHERE TAG IS SHOWN

X'-X" X WALL LINE

WHERE EXTENT IS INDICATED, REMAINDER OF WALL LINE REQUIRES TYPE A UNO

IF NO EXTENT IS INDICATED THE ENTIRE WALL LINE REQUIRES THE TYPE NOTED

NOTES

170828. Q2

1. SEE S000 SERIES SHEETS FOR GENERAL NOTES & S500 SERIES SHEETS FOR TYPICAL DETAILS.
2. DIMENSIONS ARE TO FOS OR CENTERLINE OF COLUMNS/POSTS, UNO. SEE SECTIONS & DETAILS FOR FOC LOCATIONS RELATIVE TO FOS.
3. SEE ARCH & OTHER CONSULTANT DWGS FOR DIMENSIONS & LOCATIONS OF WALL OPENINGS.
4. SEE ARCH DWGS FOR DIMENSIONS OF SLAB DEPRESSIONS & SLOPED SLABS.
5. SEE ARCH & OTHER CONSULTANT DWGS FOR PENETRATIONS NOT SHOWN. COMPLY WITH TYPICAL DETAILS.
6. SEE CIVIL DRAWINGS AND SPECIFICATIONS FOR ENGINEERED FILL.
7. EXTERIOR CONCRETE FLATWORK IS NOT SHOWN, SEE CIVIL & ARCH DWGS.
8. CONTINUOUS WALL FOOTINGS TO BE CENTERED UNDER WALLS AND PAD FOOTINGS TO BE CENTERED UNDER COLUMNS, TYP UNO.
9. TOP OF FOOTINGS SHALL BE 1'-0" BELOW FINISHED FLOOR (TOF -1'-0"), TYP UNO. SEE ARCH & OTHER CONSULTANT DRAWINGS FOR UTILITIES THAT WILL AFFECT FOOTINGS AND COMPLY WITH TYPICAL DETAILS.
10. CONTINUOUS FOOTINGS ARE FC1.5, TYP UNO. SEE SCHEDULE FOR CONTINUOUS FOOTING SIZE & REINF.
11. CONCRETE SLAB OVER SUB BASE SHALL BE SG5, TYP UNO. SEE SCHEDULE FOR MORE INFORMATION.
12. EXTERIOR WALLS ARE 2x6 STUDS @ 16" OC, TYP UNO.
13. TOC = 0'-0" TYP UNO (SEE CIVIL DRAWINGS FOR DATUM ELEVATION).

SCHEDULES

DECK SCHEDULE

TYPE	DESCRIPTION
SG5	5" CONC W/ #4 @ 16" OC EA WAY CENTERED IN SLAB O/ VAPOR RETARDER O/ 4" FREE DRAINING CRUSHED ROCK
SG12	12" CONC W/ #4 @ 16" OC T&B EA WAY O/ VAPOR RETARDER O/ 4" FREE DRAINING CRUSHED ROCK

CONTINUOUS FOOTING SCHEDULE

TYPE	WIDTH	DEPTH	REINFORCEMENT
FC1.5	1'-6"	1'-6"	(2) CONT #5 T&B
FC2.0	2'-0"	1'-6"	(3) CONT #5 T&B
FC3.0	3'-0"	1'-6"	(4) CONT #5 T&B AND #4 TIES @ 18" OC
FC3.1	3'-0"	2'-0"	(4) CONT #5 T&B AND #4 TIES @ 18" OC
FC4.0	4'-0"	1'-6"	(5) CONT #5 T&B AND #4 TIES @ 18" OC
FC4.1	4'-0"	2'-0"	(5) CONT #5 T&B AND #4 TIES @ 18" OC

SPREAD FOOTING SCHEDULE

TYPE	SIZE	DEPTH	REINFORCEMENT
FS2.0	2'-0"x2'-0"	1'-6"	(3) #5 EW AT BOT
FS3.0	3'-0"x3'-0"	1'-6"	(4) #5 EW AT BOT
FS4.0	4'-0"x4'-0"	1'-6"	(5) #5 EW AT BOT
FS4.1	4'-0"x4'-0"	2'-0"	(7) #5 EW AT BOT
FS5.0	5'-0"x5'-0"	1'-6"	(7) #5 EW AT BOT
FS5.1	5'-0"x5'-0"	2'-0"	(9) #5 EW AT BOT
FS6.1	6'-0"x4'-0"	1'-6"	#5 @ 12" OC EW AT BOT
FS7.1	7'-0"x7'-0"	2'-0"	(9) #6 EW AT BOT

LEGEND

170828. Q1

- (E) ELEMENTS SHOWN FADED - LINETYPE AND PATTERN/HATCHING AS NOTED FOR NEW CONSTRUCTION
- STRUCTURAL WALL, SEE 10/S561
- NON-STRUCTURAL WALL, SAD, FOR ATTACHMENT, SEE 4/S561
- CONCRETE CURB OR PAD 10/S561
- DEPRESSED SLAB AREA
- SAD FOR EXTENTS
- SLAB STEP SYMBOL (-2")
- ELEVATION RELATIVE TO TOC
- SX / CX / DX: CONC SLAB / PLYWOOD / CLT DECK (SOLID LINE INDICATED SPAN OF DIRECTION OF CLT)
- COL SIZE: COLUMN WITH CALLOUT
- HD SIZE / POST SIZE: HOLDOWN & REQUIRED POST, SEE 16/S563
- A: SHEAR WALL TYPE, SEE "SHEAR WALL SCHEDULE"
- FCX.X: CONTINUOUS FOOTING TAG
- FSX.X: SPREAD FOOTING TAG
- FOOTING
- S — S: STEPPED FOOTING

KEY PLAN

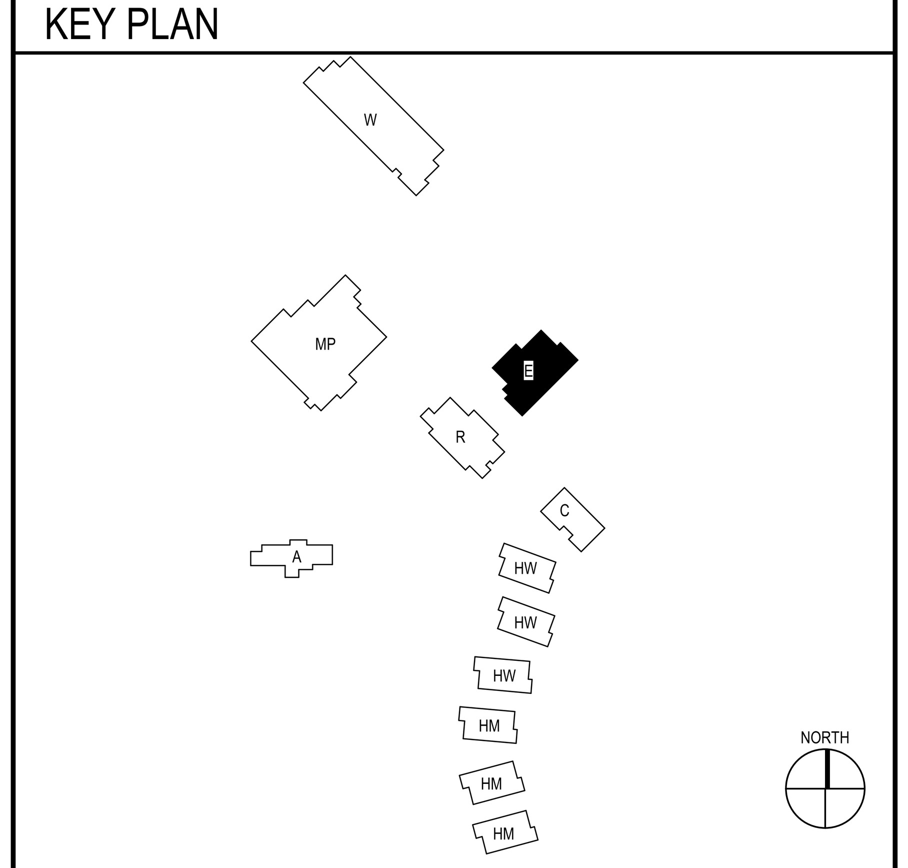

IDENTIFICATION STAMP
DIV. OF THE STATE ARCHITECT
APP: 02-118630 INC:
REVIEWED FOR
SS ☐ FLS ☐ ACS ☑
DATE: 04/13/2021

OFFICE OF THE STATE FIRE MARSHAL
APPROVED FIRE AND PANIC ONLY
Approval of this plan does not authorize or approve any omission or deviation from applicable regulations. Final approval is subject to field inspection. One set of approved plans shall be available on the project site at all times.
PERMIT NO.: 20-N-2332-CP
REVIEWED BY: LITO CATAYLO, OSFM
DATE: 4/ / /2021

DGS GENERAL SERVICES
Department of General Services
State of California
Real Estate Services Division
Project Management & Development Branch
707 Third Street, Suite 4-105
West Sacramento, California 95605

NICHOLS MELBURG & ROSSETTO
ARCHITECTS + ENGINEERS
300 Knollcrest Drive
Redding, CA. 96002
(530) 222-3300 (530) 222-3538 FAX
http://www.nmrdesign.com

Copyright © 2021
All ideas, designs, arrangements and plans indicated or represented by this drawing are owned by, and the property of, NICHOLS, MELBURG and ROSSETTO and were created, evolved and developed for use on, and in conjunction with, the specified project. None of such ideas, designs, arrangements or plans shall be used by, or disclosed to any person, firm or corporation for any purpose whatsoever without the written permission of NICHOLS, MELBURG and ROSSETTO.

LICENSE STAMPS
REGISTERED PROFESSIONAL ENGINEER
DARRON E. HUNTINGDALE
No. S4788
STRUCTURAL
STATE OF CALIFORNIA
3/19/2021

STRUCTURAL CONSULTANT
LIONAKIS
1919 Nineteenth Street
Sacramento CA 95811
P 916.558.1900 F 916.558.1919
www.lionakis.com

DRAWING STATUS
CONSTRUCTION DOCUMENTS

ISSUE

No.	Date	Description
1	10/22/2020	INITIAL PLAN REVIEW
2	01/08/2021	AGENCY RESUBMITTAL
3	03/22/2021	AGENCY RESUBMITTAL

If drawing is not 30" x 42" it is a reduced print

PROJECT
RESIDENTIAL CENTER, UKIAH: REPLACEMENT OF EXISTING RESIDENTIAL CENTER
440 EAST HILL ROAD
WILLITS, CALIFORNIA 95490
MENDOCINO COUNTY
CALIFORNIA CONSERVATION CORP

Supervisor	Designed	Drawn
		Author

DSA Application No.
02-118630

SHEET TITLE
EDUCATION FOUNDATION PLAN

DGS Project Number	Lionakis Project Number
000000000001826	018322

Reference North: NORTH
Sheet Scale: As indicated
Sheet Number: S201E

ISSUE DATE
July 9, 2021

TRUSS SCHEDULE

DESIGNATION	TRUSS CONFIGURATION	DESIGNATION	TRUSS CONFIGURATION	DESIGNATION	TRUSS CONFIGURATION
T-E1	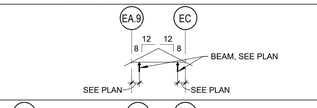	T-E4	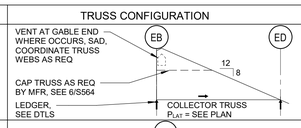	T-E7	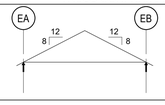
T-E2	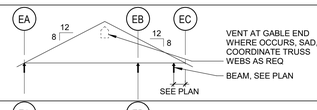	T-E5	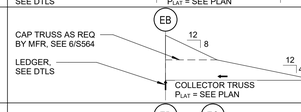		
T-E3	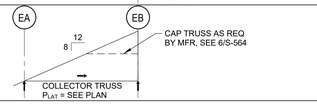	T-E6	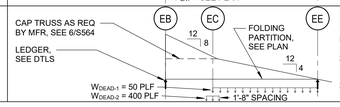		

NOTES:
1. WDEAD-1 AND WDEAD-2 DO NOT ACT CONCURRENTLY.
2. PROVIDE (1) T-E6 EA SIDE OF FOLDING PARTITION OR AT (3) LOCATIONS TOTAL WHERE PARTITION BLW ALIGNS WITH TRUSS.
3. DEFLECTION DUE TO LL SHALL NOT EXCEED 1/2".

NOTES:
1. TRUSS CONFIGURATIONS SHOWN ARE A DIAGRAMATIC OUTLINE INDICATING BEARING SUPPORTS. TRUSS WEB MEMBERS ARE NOT SHOWN AND MAY VARY BETWEEN TRUSS MANUFACTURERS.
2. REFER TO "METAL-PLATE WOOD TRUSSES" NOTES ON SHEET S012 FOR TRUSS DESIGN AND DETAILING REQUIREMENTS.
3. MANUFACTURED ROOF TRUSS LOADS AS SHOWN ON PLAN ARE UNFACTORED DESIGN LOADS. WIND AND SEISMIC LOADS ARE LRFD DESIGN LEVEL FORCES. LOADS SHOWN ON PLAN ARE IN ADDITION TO THE TRUSS DESIGNLOADING AND DETAILING REQUIREMENTS ON SHEET S012.
4. BEARING POINTS ARE SHOWN AT GRIDS, SEE DETAILS FOR FACE OF STUD RELATIVE TO BEARING LENGTH AND LOCATION. SEE DETAILS FOR WHERE LEDGERS, TRUSS HANGERS OR BEAMS ARE USED AS BEARING POINTS.
5. PROVIDE DIAPHRAGM BOUNDARY NAILING PATTERN AT COLLECTOR TRUSSES, UNO.

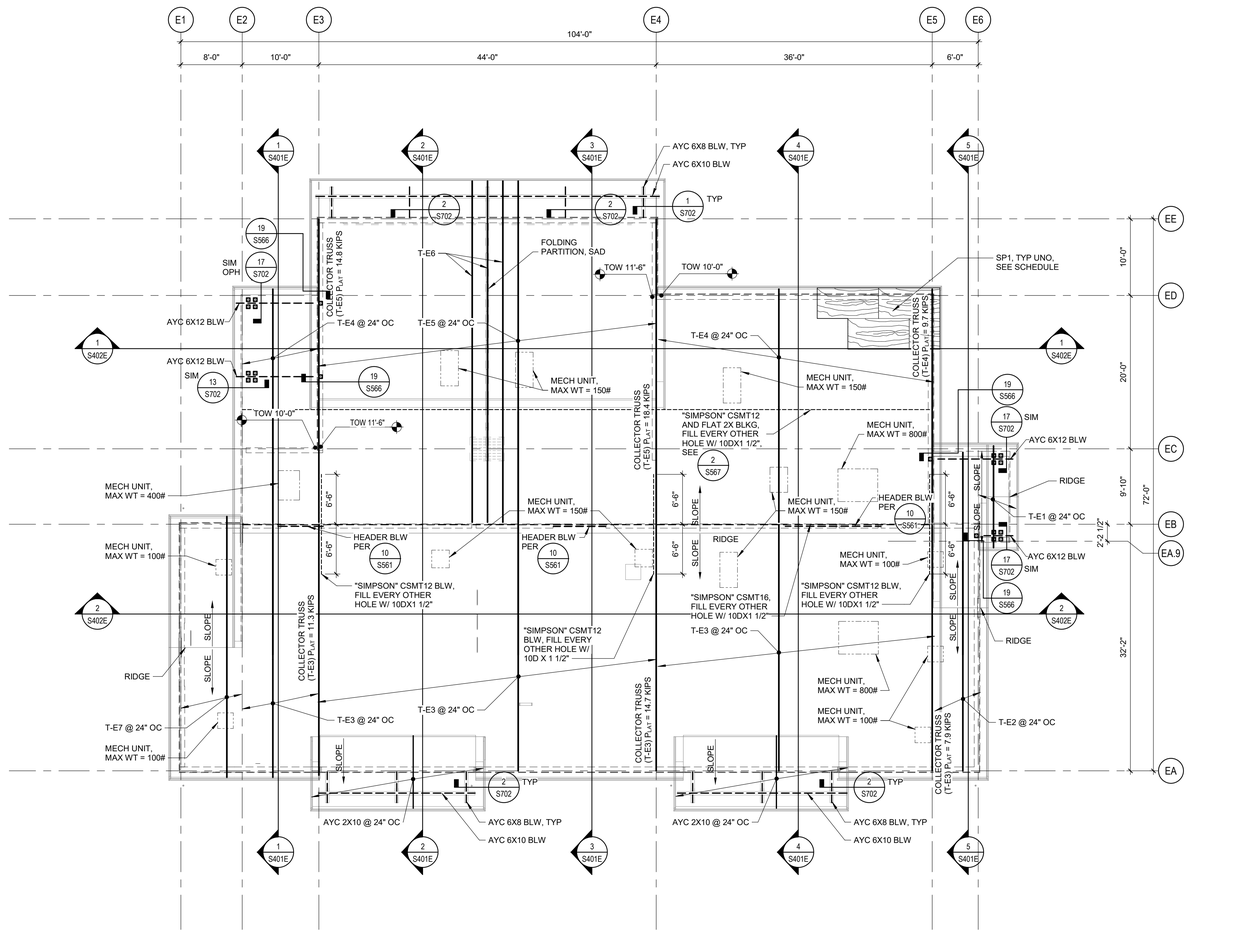

1 EDUCATION BUILDING ROOF FRAMING PLAN
SCALE 1/8" = 1'-0"

NORTH

NOTES

S- 010000_N001A
170828. Q2

1. SEE S000 SERIES SHEETS FOR GENERAL NOTES & S500 SERIES SHEETS FOR TYPICAL DETAILS.
2. SEE S200 SERIES SHEETS FOR WALL & FRAMING ELEVATIONS.
3. DIMENSIONS ARE TO FOS OR CENTERLINE OF COLUMNS/POSTS, UNO.
4. SEE ARCH & OTHER CONSULTANT DWGS FOR DIMENSIONS & LOCATIONS OF WALL OPENINGS. SEE TYPICAL DETAILS FOR FRAMING AT OPENINGS.
5. SEE ARCH & OTHER CONSULTANT DWGS FOR ROOF PENETRATIONS NOT SHOWN. PROVIDE FRAMING AROUND OPENINGS PER TYPICAL DETAILS. SAWCUT OR CORE DRILL CLEAN HOLES WITH NO OVERCUTTING. CONFORM WITH TYPICAL DETAILS.
6. SEE ARCH DWGS FOR DIMENSIONS OF ROOF OVERHANGS, UNO.
7. EXTERIOR WALLS ARE 2x6 STUDS @ 16" OC, TYP UNO.
8. PROVIDE STRUCTURAL PANEL EDGE NAILING TO THE FULL LENGTH OF ALL GLB's, AND MANUFACTURED TRUSSES, I-JOISTS, RIM JOISTS AND BLOCKING AT SHEAR WALLS. SEE PLANS FOR LOCATIONS WHERE DOUBLE ROWS OF EDGE NAILING OCCUR.
9. CAMBER IN GLU-LAM BEAMS SHALL BE 1600' RADIUS, TYP UNO.
10. SEE S-000 SHEETS FOR MANUFACTURED ROOF TRUSS DESIGN CRITERIA.
11. AT EXTERIOR EXPOSED WOOD PROVIDE ALASKAN YELLOW CEDAR, REFER TO DETAILS.

SP NAILING SCHEDULE

S- 061100_N001A
170126. Q2

WOOD STRUCTURAL PANEL NAILING SCHEDULE (UNO)	
- PROVIDE 1/8" SPACE BETWEEN SHEETS FOR ALL SP SHEATHING. - MIN SHEET WIDTH SHALL BE 24" FOR ROOF & FLOOR, 12" FOR WALLS. - SEE 17/S563 FOR TYP STRUCTURAL PANEL LAYOUT.	
SP1 - 19/32" STRUCT I SP, APA SPAN RATED 40/20 ARRANGE SHEETS AS SHOWN ON ROOF FRAMING PLAN	
EN AT PERIMETER OF EA SHEET	8D @ 6" OC
FN AT INTERIOR CONTACTS OF EA SHEET	8D @ 12" OC
BN AT PERIMETER OF ROOF	8D @ 6" OC
THIS DIAPHRAGM IS NOT DESIGNED AS A BLOCKED DIAPHRAGM. SIDE JOINTS SHALL BE SUPPORTED PER 17/S563.	

LEGEND

180821
Q1

- (E) ELEMENTS SHOWN FADED - LINETYPE AND PATTERN/HATCHING AS NOTED FOR NEW CONSTRUCTION
- STRUCTURAL WALL, SEE 10/S561
- NON-STRUCTURAL WALL, SAD, FOR ATTACHMENT, SEE 4/S561 or 10/S561
- CONCRETE CURB OR PAD
- DEPRESSED SLAB AREA
- SAD FOR EXTENTS
- SLAB STEP SYMBOL
- -2" ELEVATION RELATIVE TO TOC
- SL CL DL — CONC SLAB / PLYWOOD / CLT DECK (SOLID LINE INDICATED SPAN OF DIRECTION OF CLT)
- COL SIZE / HD SIZE / POST SIZE — COLUMN WITH CALLOUT
- HOLDOWN & REQUIRED POST, SEE 16/S563
- A — SHEAR WALL TYPE, SEE "SHEAR WALL SCHEDULE"
- W24X55 — BEAM SIZE
- C=2" — BEAM CAMBER
- S — BEAM SPLICE
- TRUSS W/ SUPERIMPOSED LOADS

KEY PLAN

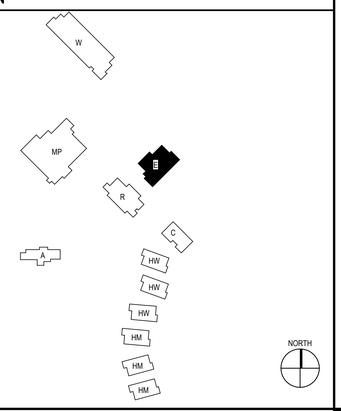

IDENTIFICATION STAMP
DIV. OF THE STATE ARCHITECT
APP: 02-118630 INC:
REVIEWED FOR
SS ☐ FLS ☐ ACS ☑
DATE: 04/13/2021

OFFICE OF THE STATE FIRE MARSHAL
APPROVED FIRE AND PANIC ONLY
Approval of this plan does not authorize or approve any omission or deviation from applicable regulations. Final approval is subject to field inspection. One set of approved plans shall be available on the project site at all times.
PERMIT NO. 20-N-2332-CP
REVIEWED BY: LEO CATAYLO, OSFM
DATE: 4 / /2021

DGS GENERAL SERVICES
Department of General Services
State of California
Real Estate Services Division
Project Management & Development Branch
707 Third Street, Suite 4-105
West Sacramento, California 95605

NICHOLS MELBURG & ROSSETTO ARCHITECTS + ENGINEERS
300 Knollcrest Drive
Redding, CA 96002
(530) 222-3300 (530) 222-3538 FAX
http://www.nmrdesign.com

Copyright © 2021
All ideas, designs, arrangements and plans indicated or represented by this drawing are owned by, and the property of, NICHOLS, MELBURG and ROSSETTO and were created, evolved and developed for use on, and in conjunction with, the specified project. None of such ideas, designs, arrangements or plans shall be used by, or disclosed to any person, firm or corporation for any purpose whatsoever without the written permission of NICHOLS, MELBURG and ROSSETTO.

LICENSE STAMPS

REGISTERED PROFESSIONAL ENGINEER — JEROME HUNTINGTON — No. S4788 — STRUCTURAL — STATE OF CALIFORNIA
3/19/2021

STRUCTURAL CONSULTANT

LIONAKIS
1919 Nineteenth Street
Sacramento CA 95811
P 916.558.1900 F 916.558.1919
www.lionakis.com

DRAWING STATUS
CONSTRUCTION DOCUMENTS

ISSUE

No.	Date	Description
1	10/22/2020	INITIAL PLAN REVIEW
2	01/08/2021	AGENCY RESUBMITTAL
3	03/22/2021	AGENCY RESUBMITTAL

If drawing is not 30" x 42" it is a reduced print

PROJECT
RESIDENTIAL CENTER, UKIAH: REPLACEMENT OF EXISTING RESIDENTIAL CENTER
440 EAST HILL ROAD
WILLITS, CALIFORNIA 95490
MENDOCINO COUNTY
CALIFORNIA CONSERVATION CORP

Supervisor	Designed	Drawn
		Author

DSA Application No.
02-118630

SHEET TITLE
EDUCATION ROOF FRAMING PLAN

DGS Project Number	Lionakis Project Number
000000000001826	018322

Reference North — Sheet Scale: As indicated

Sheet Number: S202E

ISSUE DATE
July 9, 2021

Plot Date: 3/19/2021 11:20:19 AM
File Name: BIM 360://CCC Willits Residential Center/018322_S-MASTER_R18_CENTRAL.rvt

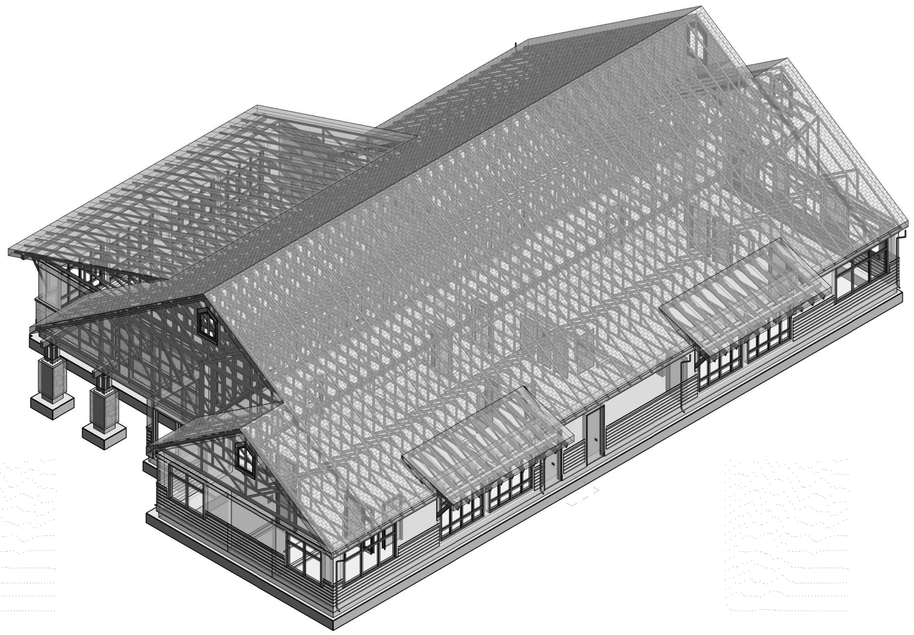

1 BUILDING E - VIEW 1
SCALE

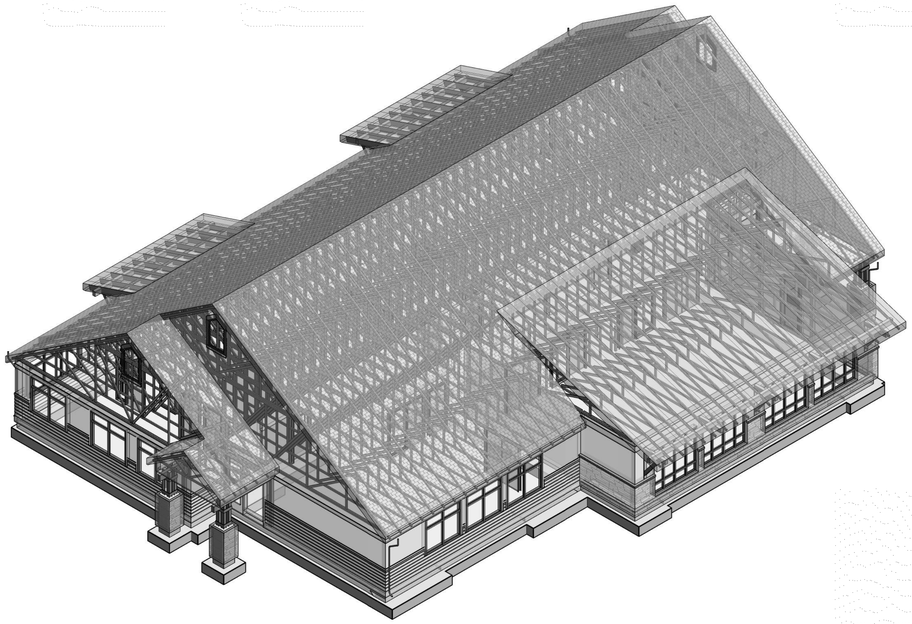

2 BUILDING E - VIEW 2
SCALE

Plot Date: 3/19/2021 11:21:19 AM
File Name: BIM 360://CCO Willits Residential Center/018322_S-MASTER_R18_CENTRAL.rvt

3D VIEW NOTES

170828. Q1

1. FRAMING SHOWN IN THESE VIEWS IS FOR GENERAL INFORMATION ONLY. THE BALANCE OF STRUCTURAL DOCUMENT TAKE PRECEDENCE OVER 3D VIEWS.
2. NOT ALL FRAMING MAY BE SHOWN. SEE CONSTRUCTION DOCUMENTS FOR ADDITIONAL FRAMING MEMBERS REQUIRED.

KEY PLAN

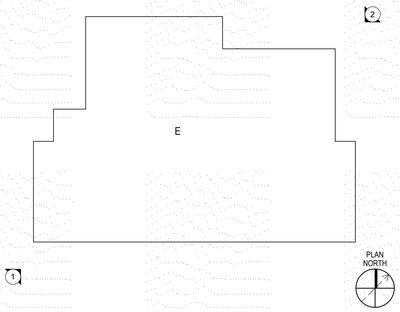

IDENTIFICATION STAMP
DIV. OF THE STATE ARCHITECT
APP: 02-118630 INC:
REVIEWED FOR
SS ☐ FLS ☐ ACS ☑
DATE: 04/13/2021

OFFICE OF THE STATE FIRE MARSHAL
APPROVED FIRE AND PANIC ONLY
Approval of this plan does not authorize or approve any omission or deviation from applicable regulations. Final approval is subject to field inspection. One set of approved plans shall be available on the project site at all times.
PERMIT NO. 20-N-2332-CP
REVIEWED BY: LEO CATAYLO, OSFM
DATE: 4 / /2021

DGS GENERAL SERVICES
Department of General Services
State of California
Real Estate Services Division
Project Management & Development Branch
707 Third Street, Suite 4-105
West Sacramento, California 95605

NICHOLS MELBURG & ROSSETTO
ARCHITECTS + ENGINEERS
300 Knollcrest Drive
Redding, CA 96002
(530) 222-3300 (530) 222-3538 FAX
http://www.nmrdesign.com

Copyright © 2021
All ideas, designs, arrangements and plans indicated or represented by this drawing are owned by, and the property of, NICHOLS, MELBURG and ROSSETTO and were created, evolved and developed for use on, and in conjunction with, the specified project. None of such ideas, designs, arrangements or plans shall be used by, or disclosed to any person, firm or corporation for any purpose whatsoever without the written permission of NICHOLS, MELBURG and ROSSETTO.

LICENSE STAMPS

REGISTERED PROFESSIONAL ENGINEER
GEORGE E. HUNTINGFORD
No. S47599
CIVIL STRUCTURAL
STATE OF CALIFORNIA
3/19/2021

STRUCTURAL CONSULTANT

LIONAKIS
1919 Nineteenth Street
Sacramento CA 95811
P 916.558.1900 F 916.558.1919
www.lionakis.com

DRAWING STATUS
CONSTRUCTION DOCUMENTS

ISSUE

No.	Date	Description
1	10/22/2020	INITIAL PLAN REVIEW
2	01/08/2021	AGENCY RESUBMITTAL
3	03/22/2021	AGENCY RESUBMITTAL

If drawing is not 30" x 42" it is a reduced print

PROJECT
RESIDENTIAL CENTER, UKIAH: REPLACEMENT OF EXISTING RESIDENTIAL CENTER
440 EAST HILL ROAD
WILLITS, CALIFORNIA 95490
MENDOCINO COUNTY
CALIFORNIA CONSERVATION CORP

Supervisor	Designed	Drawn
		Author

DSA Application No.
02-118630

SHEET TITLE
EDUCATION 3D VIEWS

DGS Project Number: 00000000001826
Lionakis Project Number: 018322

Reference North
Sheet Scale: 12" = 1'-0"
Sheet Number: S211E

ISSUE DATE
July 9, 2021

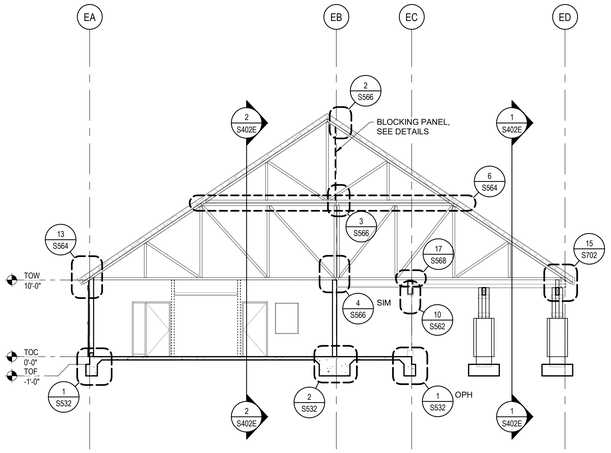

1 BLDG E - BUILDING SECTION

SCALE 1/8" = 1'-0"

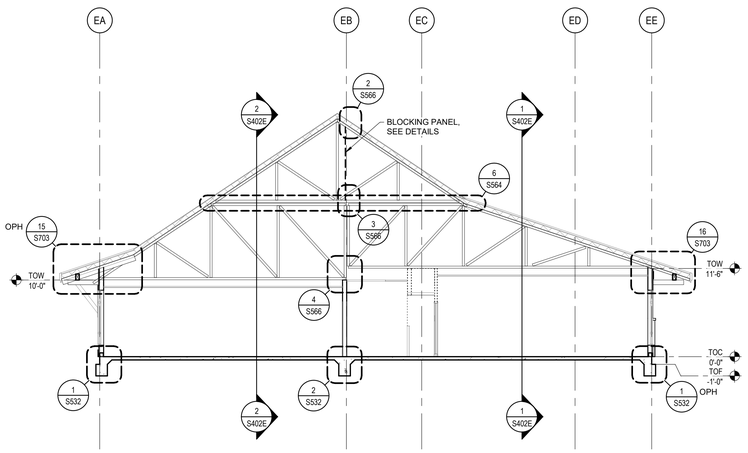

2 BLDG E - BUILDING SECTION

SCALE 1/8" = 1'-0"

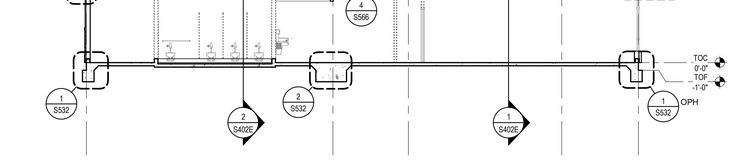

3 BLDG E - BUILDING SECTION

SCALE 1/8" = 1'-0"

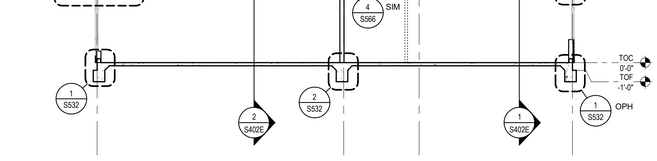

4 BLDG E - BUILDING SECTION

SCALE 1/8" = 1'-0"

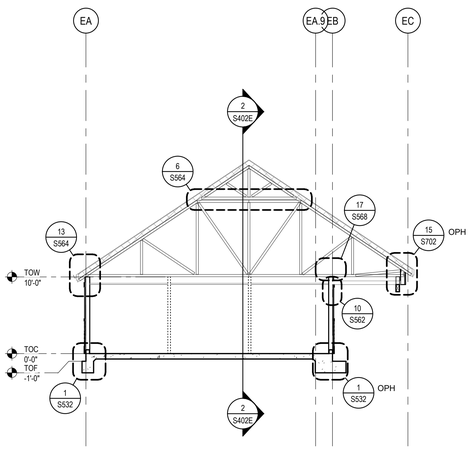

5 BLDG E - BUILDING SECTION

SCALE 1/8" = 1'-0"

IDENTIFICATION STAMP
DIV. OF THE STATE ARCHITECT
APP: 02-118630 INC:
REVIEWED FOR
SS ☐ FLS ☐ ACS ☑
DATE: 04/13/2021

OFFICE OF THE STATE FIRE MARSHAL
APPROVED FIRE AND PANIC ONLY
Approval of this plan does not authorize or approve any omission or deviation from applicable regulations. Final approval is subject to field inspection. One set of approved plans shall be available on the project site at all times.
PERMIT NO. 20-N-2332-CP
REVIEWED BY: LEO CATAYLO, OSFM
DATE: 4 / /2021

DGS GENERAL SERVICES
Department of General Services
State of California
Real Estate Services Division
Project Management & Development Branch
707 Third Street, Suite 4-105
West Sacramento, California 95605

NICHOLS MELBURG & ROSSETTO
ARCHITECTS + ENGINEERS
300 Knollcrest Drive
Redding, CA. 96002
(530) 222-3300 (530) 222-3538 FAX
http://www.nmrdesign.com

Copyright © 2021
All ideas, designs, arrangements and plans indicated or represented by this drawing are owned by, and the property of, NICHOLS, MELBURG and ROSSETTO and were created, evolved and developed for use on, and in conjunction with, the specified project. None of such ideas, designs, arrangements or plans shall be used by, or disclosed to any person, firm or corporation for any purpose whatsoever without the written permission of NICHOLS, MELBURG and ROSSETTO.

LICENSE STAMPS

REGISTERED PROFESSIONAL ENGINEER
HAROLD E. HUNTINGTON
No. S4709
STRUCTURAL
STATE OF CALIFORNIA
3/19/2021

STRUCTURAL CONSULTANT

LIONAKIS

1919 Nineteenth Street
Sacramento CA 95811
P 916.558.1900 F 916.558.1919
www.lionakis.com

DRAWING STATUS
CONSTRUCTION DOCUMENTS

ISSUE

No.	Date	Description
1	10/22/2020	INITIAL PLAN REVIEW
2	01/08/2021	AGENCY RESUBMITTAL
3	03/22/2021	AGENCY RESUBMITTAL

If drawing is not 30" x 42" it is a reduced print

PROJECT
RESIDENTIAL CENTER, UKIAH: REPLACEMENT OF EXISTING RESIDENTIAL CENTER
440 EAST HILL ROAD
WILLITS, CALIFORNIA 95490
MENDOCINO COUNTY
CALIFORNIA CONSERVATION CORP

Supervisor	Designed	Drawn
		Author

DSA Application No.
02-118630

SHEET TITLE
EDUCATION STRUCTURAL BUILDING SECTIONS

DGS Project Number: 00000000001826
Lionakis Project Number: 018322

Reference North: NORTH
Sheet Scale: 1/8" = 1'-0"
Sheet Number: S401E

ISSUE DATE
July 9, 2021

KEY PLAN

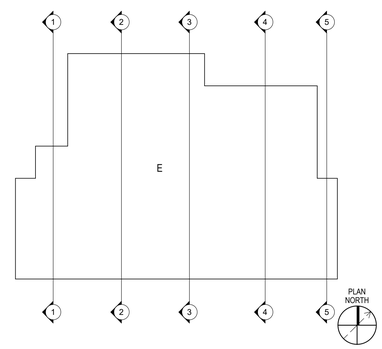

Plot Date: 3/19/2021 11:23:23 AM
File Name: BIM 360://CCC Willits Residential Center/018322_S-MASTER_R18_CENTRAL.rvt

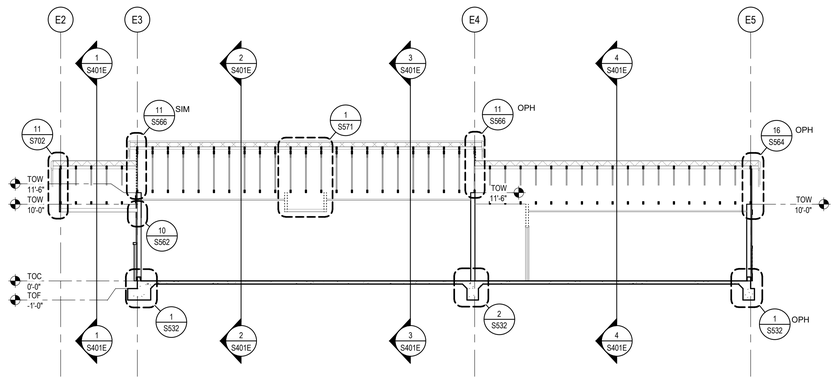

1 BLDG E - BUILDING SECTION

SCALE 1/8" = 1'-0"

2 BLDG E - BUILDING SECTION

SCALE 1/8" = 1'-0"

KEY PLAN

IDENTIFICATION STAMP
DIV. OF THE STATE ARCHITECT
APP: 02-118630 INC:
REVIEWED FOR
SS ☐ FLS ☐ ACS ☑
DATE: 04/13/2021

OFFICE OF THE STATE FIRE MARSHAL
APPROVED FIRE AND PANIC ONLY
Approval of this plan does not authorize or approve any omission or deviation from applicable regulations. Final approval is subject to field inspection. One set of approved plans shall be available on the project site at all times.
PERMIT NO. 20-N-2332-CP
REVIEWED BY: LEO CATAYLO, OSFM
DATE: 4 / /2021

GENERAL SERVICES
Department of General Services
State of California
Real Estate Services Division
Project Management & Development Branch
707 Third Street, Suite 4-105
West Sacramento, California 95605

NICHOLS MELBURG & ROSSETTO
ARCHITECTS + ENGINEERS
300 Knollcrest Drive
Redding, CA 96002
(530) 222-3300 (530) 222-3538 FAX
http://www.nmrdesign.com

Copyright © 2021
All ideas, designs, arrangements and plans indicated or represented by this drawing are owned by, and the property of, NICHOLS, MELBURG and ROSSETTO and were created, evolved and developed for use on, and in conjunction with, the specified project. None of such ideas, designs, arrangements or plans shall be used by, or disclosed to any person, firm or corporation for any purpose whatsoever without the written permission of NICHOLS, MELBURG and ROSSETTO.

LICENSE STAMPS

REGISTERED PROFESSIONAL ENGINEER
SIMON E. HUNTINGTON
No. S4720
STRUCTURAL
STATE OF CALIFORNIA
3/19/2021

STRUCTURAL CONSULTANT

LIONAKIS

1919 Nineteenth Street
Sacramento CA 95811
P 916.558.1900 F 916.558.1919
www.lionakis.com

DRAWING STATUS
CONSTRUCTION DOCUMENTS

ISSUE

No.	Date	Description
1	10/22/2020	INITIAL PLAN REVIEW
2	01/08/2021	AGENCY RESUBMITTAL
3	03/22/2021	AGENCY RESUBMITTAL

If drawing is not 30" x 42" it is a reduced print

PROJECT
RESIDENTIAL CENTER, UKIAH: REPLACEMENT OF EXISTING RESIDENTIAL CENTER
440 EAST HILL ROAD
WILLITS, CALIFORNIA 95490
MENDOCINO COUNTY
CALIFORNIA CONSERVATION CORP

Supervisor	Designed	Drawn
		Author

DSA Application No.
02-118630

SHEET TITLE
EDUCATION STRUCTURAL BUILDING SECTIONS

DGS Project Number	Lionakis Project Number
000000000001826	018322

Reference North
Sheet Scale 1/8" = 1'-0"
Sheet Number S402E

ISSUE DATE
July 9, 2021

Plot Date: 3/19/2021 11:29:50 AM
File Name: BIM 360://CCC Willits Residential Center/018322_S-MASTER_R18_CENTRAL.rvt

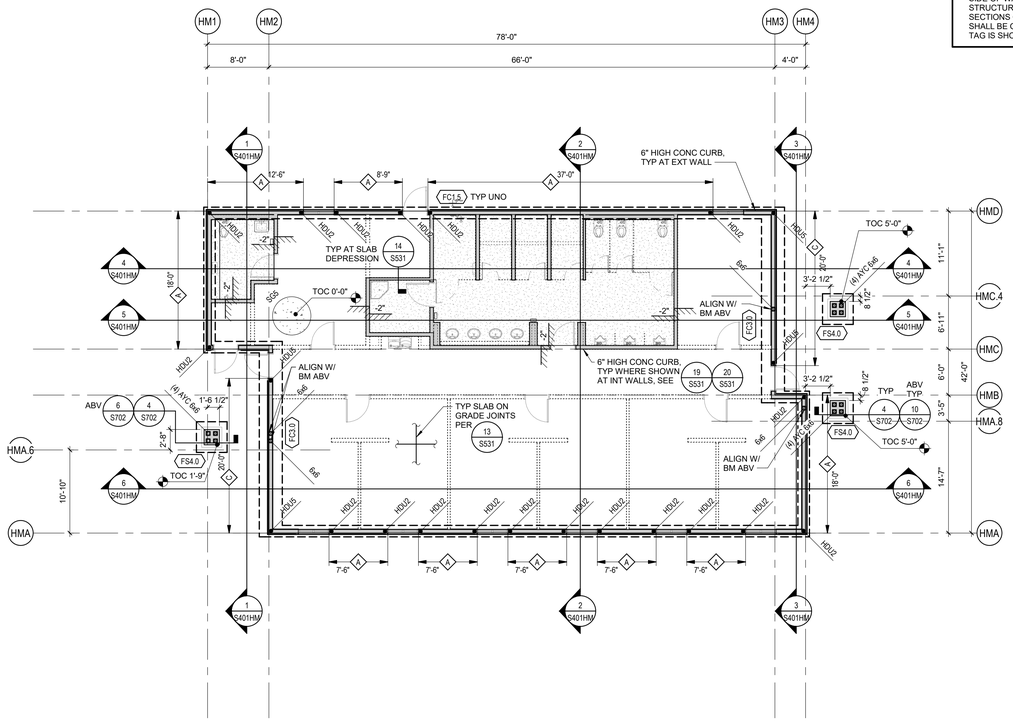

1 MEN'S HOUSING BUILDING FLOOR PLAN

SCALE 1/8" = 1'-0"

NORTH

SHEAR WALL SCHEDULE

S- 060600. N001A
170126. Q2

WALL MARK	SP EDGE NAILING	SILL PLATE THICKNESS	STUDS OR BLKG AT PANEL EDGES	SILL PLATE ANCHORAGE		STRUCTURAL PANEL 15/32" STRUCT I
				AB'S TO CONC	NAILS TO WOOD FRAMING	
A	8D @ 6" OC	2X	2X	5/8" DIA @ 48" OC	16D @ 6" OC	ONE SIDE
B	8D @ 4" OC	3X	3X	5/8" DIA @ 40" OC	SEE SECTIONS AND DETAILS	ONE SIDE
C	8D @ 3" OC	3X	3X	5/8" DIA @ 32" OC		ONE SIDE
D	8D @ 2" OC	3X	3X	5/8" DIA @ 24" OC		ONE SIDE
E	8D @ 4" OC	3X	3X	5/8" DIA @ 16" OC		BOTH SIDES
F	8D @ 3" OC	3X	3X	5/8" DIA @ 8" OC		BOTH SIDES
G	10D @ 2" OC	3X	3X	5/8" DIA @ 8" OC		BOTH SIDES

1. SEE 18/S563 FOR TYP SHEAR WALL SP LAYOUT.
2. EDGE NAILING OCCURS AT EVERY PANEL EDGE. FIELD NAILING SHALL BE 8D @ 12" OC, EXCEPT AT TYPE G FIELD NAILING SHALL BE 10D @ 12" OC.
3. NAILS SHALL BE STEEL WIRE COMMON TYPE OF THE SIZES DENOTED. DRIVE STRUCTURAL PANEL NAILS SO THAT THE NAIL HEADS ARE FLUSH WITH THE SURFACE OF THE PANEL. DO NOT OVERDRIVE NAILS. STAGGER NAILS AT EACH SIDE OF JOINTS.
4. STRUCTURAL PANELS SHALL HAVE A PANEL SPAN RATING OF 32/16. OSB OR 5-PLY/5-LAYER PLYWOOD.
5. BLOCK PANEL EDGES WITH FULL STUD WIDTH BLOCKING OF THICKNESS SPECIFIED.
6. SILL PLATE NAILING IS TO PARALLEL FRAMING BELOW (WHETHER BLKG OR CONT). PROVIDE (2) ADDITIONAL NAILS OF SIZE SHOWN TO EA PERPENDICULAR FRAMING BELOW.
7. PREDRILL NAIL HOLES IF SPLITTING OCCURS. STAGGER NAILING TO PREVENT SPLITTING.
8. WHERE STRUCTURAL PANELS OCCUR AT BOTH SIDES OF WALL, STAGGER PANEL JOINTS AT EACH FACE SO THEY DO NOT FALL ON THE SAME STUD OR BLOCKING.
9. FA SPACING AT SHEAR WALLS SHALL BE 3X THE EDGE NAIL SPACING FOR ONE-SIDED SHEAR WALLS, AND 6" OC FOR WALLS WITH STRUCTURAL PANELS ON BOTH SIDES.
10. PROVIDE STRUCTURAL PANELS FULL LENGTH AND HEIGHT OF ALL EXTERIOR WALLS AND AT INTERIOR WALLS AS SHOWN ON SECTIONS AND DETAILS. MINIMUM STRUCTURAL PANEL NAILING SHALL BE TYPE A UNO. SEE PLANS FOR HEAVIER NAILING LOCATIONS NOTED BY WALL MARKS THUS:

MIN LENGTH OF SHEAR WALL SEGMENT (NOT ACTUAL LENGTH) SEE SECTIONS & DETAILS FOR SIDE OF WALL REQUIRING STRUCTURAL PANELS, UNO ON SECTIONS OR DETAILS, SP SHALL BE ON THE SIDE WHERE TAG IS SHOWN

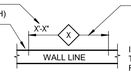

WHERE EXTENT IS INDICATED, REMAINDER OF WALL LINE REQUIRES TYPE A UNO

IF NO EXTENT IS INDICATED THE ENTIRE WALL LINE REQUIRES THE TYPE NOTED

NOTES

170828. Q2

1. SEE S000 SERIES SHEETS FOR GENERAL NOTES & S500 SERIES SHEETS FOR TYPICAL DETAILS.
2. DIMENSIONS ARE TO FOS OR CENTERLINE OF COLUMNS/POSTS, UNO. SEE SECTIONS & DETAILS FOR FOC LOCATIONS RELATIVE TO FOS.
3. SEE ARCH & OTHER CONSULTANT DWGS FOR DIMENSIONS & LOCATIONS OF WALL OPENINGS.
4. SEE ARCH DWGS FOR DIMENSIONS OF SLAB DEPRESSIONS & SLOPED SLABS.
5. SEE ARCH & OTHER CONSULTANT DWGS FOR PENETRATIONS NOT SHOWN. COMPLY WITH TYPICAL DETAILS.
6. SEE CIVIL DRAWINGS AND SPECIFICATIONS FOR ENGINEERED FILL.
7. EXTERIOR CONCRETE FLATWORK IS NOT SHOWN, SEE CIVIL & ARCH DWGS.
8. CONTINUOUS WALL FOOTINGS TO BE CENTERED UNDER WALLS AND PAD FOOTINGS TO BE CENTERED UNDER COLUMNS, TYP UNO.
9. TOP OF FOOTINGS SHALL BE 1'-0" BELOW FINISHED FLOOR (TOF -1'-0"), TYP UNO. SEE ARCH & OTHER CONSULTANT DRAWINGS FOR UTILITIES THAT WILL AFFECT FOOTINGS AND COMPLY WITH TYPICAL DETAILS.
10. CONTINUOUS FOOTINGS ARE FC1.5, TYP UNO. SEE SCHEDULE FOR CONTINUOUS FOOTING SIZE & REINF.
11. CONCRETE SLAB OVER SUB BASE SHALL BE SG5, TYP UNO. SEE SCHEDULE FOR MORE INFORMATION.
12. EXTERIOR WALLS ARE 2x6 STUDS @ 16" OC, TYP UNO.
13. TOC = 0'-0" TYP UNO (SEE CIVIL DRAWINGS FOR DATUM ELEVATION).

SCHEDULES

DECK SCHEDULE

TYPE	DESCRIPTION
SG5	5" CONC W/ #4 @ 16" OC EA WAY CENTERED IN SLAB O/ VAPOR RETARDER O/ 4" FREE DRAINING CRUSHED ROCK
SG12	12" CONC W/ #4 @ 16" OC T&B EA WAY O/ VAPOR RETARDER O/ 4" FREE DRAINING CRUSHED ROCK

CONTINUOUS FOOTING SCHEDULE

TYPE	WIDTH	DEPTH	REINFORCEMENT
FC1.5	1'-6"	1'-6"	(2) CONT #5 T&B
FC2.0	2'-0"	1'-6"	(3) CONT #5 T&B
FC3.0	3'-0"	1'-6"	(4) CONT #5 T&B AND #4 TIES @ 18" OC
FC3.1	3'-0"	2'-0"	(4) CONT #5 T&B AND #4 TIES @ 18" OC
FC4.0	4'-0"	1'-6"	(5) CONT #5 T&B AND #4 TIES @ 18" OC
FC4.1	4'-0"	2'-0"	(5) CONT #5 T&B AND #4 TIES @ 18" OC

SPREAD FOOTING SCHEDULE

TYPE	SIZE	DEPTH	REINFORCEMENT
FS2.0	2'-0"x2'-0"	1'-6"	(3) #5 EW AT BOT
FS3.0	3'-0"x3'-0"	1'-6"	(4) #5 EW AT BOT
FS4.0	4'-0"x4'-0"	1'-6"	(5) #5 EW AT BOT
FS4.1	4'-0"x4'-0"	2'-0"	(7) #5 EW AT BOT
FS5.0	5'-0"x5'-0"	1'-6"	(7) #5 EW AT BOT
FS5.1	5'-0"x5'-0"	2'-0"	(9) #5 EW AT BOT
FS6.1	6'-0"x4'-0"	1'-6"	#5 @ 12" OC EW AT BOT
FS7.1	7'-0"x7'-0"	2'-0"	(9) #6 EW AT BOT

LEGEND

170828. Q1

- (E) ELEMENTS SHOWN FADED - LINETYPE AND PATTERN/HATCHING AS NOTED FOR NEW CONSTRUCTION
- STRUCTURAL WALL, SEE 10 S561
- NON-STRUCTURAL WALL, SAD, FOR ATTACHMENT, SEE 4 S561 / 10 S561
- CONCRETE CURB OR PAD
- DEPRESSED SLAB AREA
- SAD FOR EXTENTS
- SLAB STEP SYMBOL
- -2" ELEVATION RELATIVE TO TOC
- SF CF DA CONC SLAB / PLYWOOD / CLT DECK (SOLID LINE INDICATED SPAN OF DIRECTION OF CLT)
- COL SIZE COLUMN WITH CALLOUT
- HD SIZE / POST SIZE HOLDOWN & REQUIRED POST, SEE 16 S563
- A SHEAR WALL TYPE, SEE "SHEAR WALL SCHEDULE"
- FCX.X CONTINUOUS FOOTING TAG
- FSX.X SPREAD FOOTING TAG
- FOOTING
- S S STEPPED FOOTING

KEY PLAN

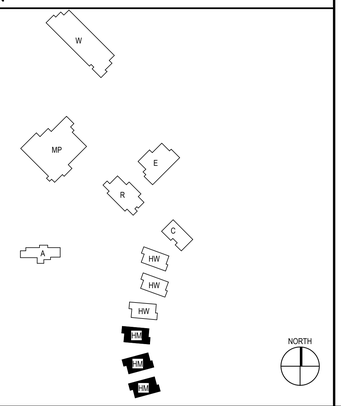

IDENTIFICATION STAMP
DIV. OF THE STATE ARCHITECT
APP: 02-118630 INC:
REVIEWED FOR
SS ☐ FLS ☐ ACS ☑
DATE: 04/13/2021

OFFICE OF THE STATE FIRE MARSHAL
APPROVED FIRE AND PANIC ONLY
Approval of this plan does not authorize or approve any omission or deviation from applicable regulations. Final approval is subject to field inspection. One set of approved plans shall be available on the project site at all times.
PERMIT NO. 20 N-2332-CP
REVIEWED BY: LEO CATAYLO, OSFM
DATE: 4 / /2021

DGS GENERAL SERVICES
Department of General Services
State of California
Real Estate Services Division
Project Management & Development Branch
707 Third Street, Suite 4-105
West Sacramento, California 95605

NICHOLS MELBURG & ROSSETTO ARCHITECTS + ENGINEERS
300 Knollcrest Drive
Redding, CA. 96002
(530) 222-3300 (530) 222-3538 FAX
http://www.nmrdesign.com

Copyright © 2021
All ideas, designs, arrangements and plans indicated or represented by this drawing are owned by, and the property of, NICHOLS, MELBURG and ROSSETTO and were created, evolved and developed for use on, and in conjunction with, the specified project. None of such ideas, designs, arrangements or plans shall be used by, or disclosed to any person, firm or corporation for any purpose whatsoever without the written permission of NICHOLS, MELBURG and ROSSETTO.

LICENSE STAMPS

REGISTERED PROFESSIONAL ENGINEER JAMON E. HUNTINGTON No. S-6750 STRUCTURAL STATE OF CALIFORNIA
3/19/2021

STRUCTURAL CONSULTANT

LIONAKIS
1919 Nineteenth Street
Sacramento CA 95811
P 916.558.1900 F 916.558.1919
www.lionakis.com

DRAWING STATUS
CONSTRUCTION DOCUMENTS

ISSUE

No.	Date	Description
1	10/22/2020	INITIAL PLAN REVIEW
2	01/08/2021	AGENCY RESUBMITTAL
3	03/22/2021	AGENCY RESUBMITTAL

If drawing is not 30" x 42" it is a reduced print

PROJECT
RESIDENTIAL CENTER, UKIAH: REPLACEMENT OF EXISTING RESIDENTIAL CENTER
440 EAST HILL ROAD
WILLITS, CALIFORNIA 95490
MENDOCINO COUNTY
CALIFORNIA CONSERVATION CORP

Supervisor	Designed	Drawn
		Author

DSA Application No.
02-118630

SHEET TITLE
MEN'S HOUSING FOUNDATION PLAN

DGS Project Number	Lionakis Project Number
000000000001826	018322

Reference North: NORTH
Sheet Scale: As indicated
Sheet Number: S201HM

ISSUE DATE
July 9, 2021

Plot Date: 3/19/2021 11:19:56 AM
File Name: BIM 360://CCC Willits Residential Center/018322_S-MASTER_R18_CENTRAL.rvt

TRUSS SCHEDULE	
DESIGNATION	TRUSS CONFIGURATION
T-HM1	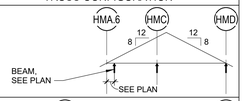
T-HM2	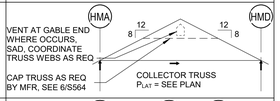
T-HM3	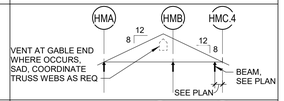
T-HM4	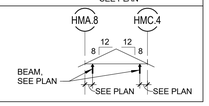

NOTES:
1. TRUSS CONFIGURATIONS SHOWN ARE A DIAGRAMATIC OUTLINE INDICATING BEARING SUPPORTS. TRUSS WEB MEMBERS ARE NOT SHOWN AND MAY VARY BETWEEN TRUSS MANUFACTURERS.
2. REFER TO "METAL-PLATE WOOD TRUSSES" NOTES ON SHEET S012 FOR TRUSS DESIGN AND DETAILING REQUIREMENTS.
3. MANUFACTURED ROOF TRUSS LOADS AS SHOWN ON PLAN ARE UNFACTORED DESIGN LOADS. WIND AND SEISMIC LOADS ARE LRFD DESIGN LEVEL FORCES. LOADS SHOWN ON PLAN ARE IN ADDITION TO THE TRUSS DESIGN/LOADING AND DETAILING REQUIREMENTS ON SHEET S012.
4. BEARING POINTS ARE SHOWN AT GRIDS. SEE DETAILS FOR FACE OF STUD RELATIVE TO BEARING LENGTH AND LOCATION. SEE DETAILS FOR WHERE LEDGERS, TRUSS HANGERS OR BEAMS ARE USED AS BEARING POINTS.
5. PROVIDE DIAPHRAGM BOUNDARY NAILING PATTERN AT COLLECTOR TRUSSES, UNO.

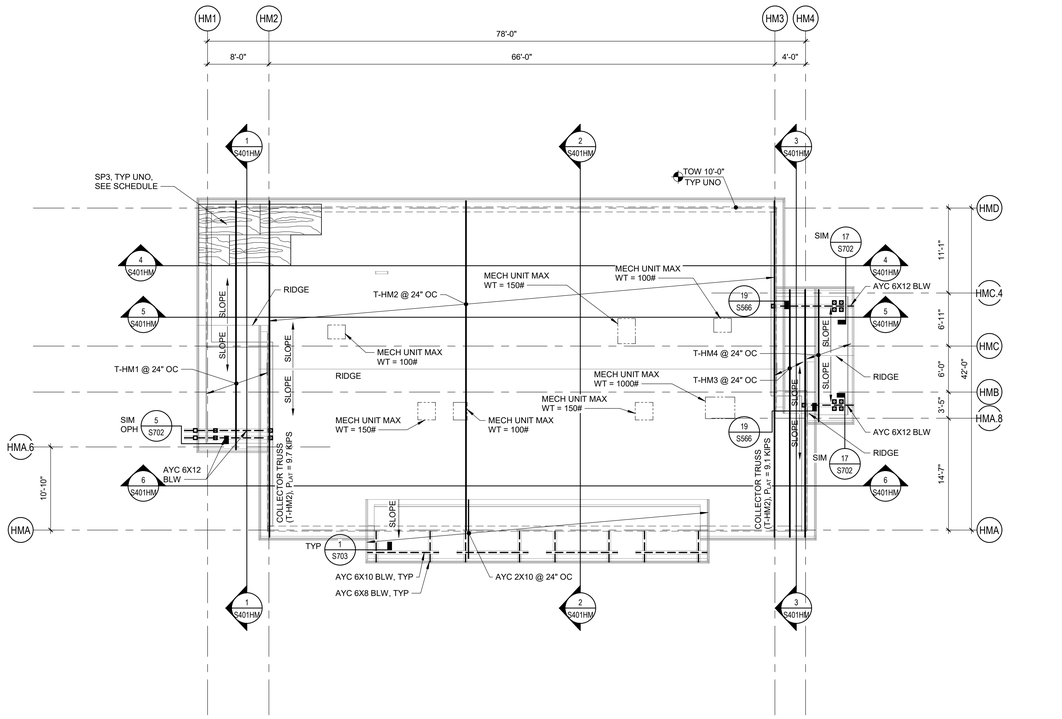

1 MEN'S HOUSING BUILDING ROOF FRAMING PLAN
SCALE 1/8" = 1'-0"

NORTH

NOTES
S- 010000_N001A
170828. Q2

1. SEE S000 SERIES SHEETS FOR GENERAL NOTES & S500 SERIES SHEETS FOR TYPICAL DETAILS.
2. SEE S200 SERIES SHEETS FOR WALL & FRAMING ELEVATIONS.
3. DIMENSIONS ARE TO FOS OR CENTERLINE OF COLUMNS/POSTS, UNO.
4. SEE ARCH & OTHER CONSULTANT DWGS FOR DIMENSIONS & LOCATIONS OF WALL OPENINGS. SEE TYPICAL DETAILS FOR FRAMING AT OPENINGS.
5. SEE ARCH & OTHER CONSULTANT DWGS FOR ROOF PENETRATIONS NOT SHOWN. PROVIDE FRAMING AROUND OPENINGS PER TYPICAL DETAILS. SAWCUT OR CORE DRILL CLEAN HOLES WITH NO OVERCUTTING. CONFORM WITH TYPICAL DETAILS.
6. SEE ARCH DWGS FOR DIMENSIONS OF ROOF OVERHANGS, UNO.
7. EXTERIOR WALLS ARE 2x6 STUDS @ 16" OC, TYP UNO.
8. PROVIDE STRUCTURAL PANEL EDGE NAILING TO THE FULL LENGTH OF ALL GLB's, AND MANUFACTURED TRUSSES, I-JOISTS, RIM JOISTS AND BLOCKING AT SHEAR WALLS. SEE PLANS FOR LOCATIONS WHERE DOUBLE ROWS OF EDGE NAILING OCCUR.
9. CAMBER IN GLU-LAM BEAMS SHALL BE 1600' RADIUS, TYP UNO.
10. SEE S-000 SHEETS FOR MANUFACTURED ROOF TRUSS DESIGN CRITERIA.
11. AT EXTERIOR EXPOSED WOOD PROVIDE ALASKAN YELLOW CEDAR, REFER TO DETAILS.

SP NAILING SCHEDULE
S- 061100_N001A
170126. Q2

WOOD STRUCTURAL PANEL NAILING SCHEDULE (UNO)	
- PROVIDE 1/8" SPACE BETWEEN SHEETS FOR ALL SP SHEATHING. - MIN SHEET WIDTH SHALL BE 24" FOR ROOF & FLOOR, 12" FOR WALLS. - SEE 17/S563 FOR TYP STRUCTURAL PANEL LAYOUT.	
SP3 - 19/32" STRUCT I SP, APA SPAN RATED 40/20 ARRANGE SHEETS AS SHOWN ON ROOF FRAMING PLAN	
EN AT PERIMETER OF EA SHEET FN AT INTERIOR CONTACTS OF EA SHEET BN AT PERIMETER OF ROOF	8D @ 4" OC 8D @ 12" OC 8D @ 4" OC
SIDE JOINTS TO BE BLOCKED PER 17/S563.	

LEGEND
180621
Q1

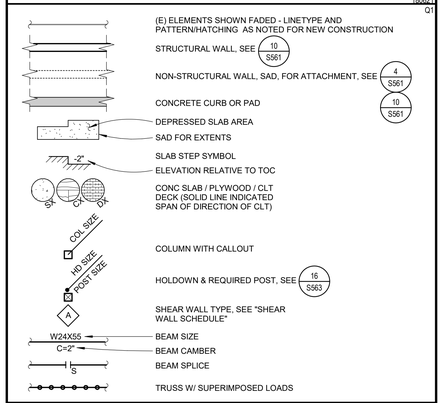

KEY PLAN

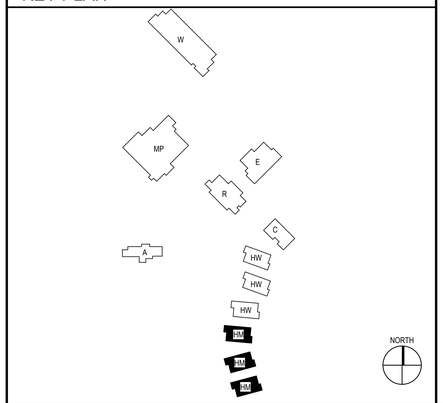

IDENTIFICATION STAMP
DIV. OF THE STATE ARCHITECT
APP: 02-118630 INC:
REVIEWED FOR
SS ☐ FLS ☐ ACS ☑
DATE: 04/13/2021

OFFICE OF THE STATE FIRE MARSHAL
APPROVED FIRE AND PANIC ONLY
Approval of this plan does not authorize or approve any omission or deviation from applicable regulations. Final approval is subject to field inspection. One set of approved plans shall be available on the project site at all times.
PERMIT NO. 20 N-2332-CP
REVIEWED BY: LEO CATAYLO, OSFM
DATE: 4 / /2021

GENERAL SERVICES
Department of General Services
State of California
Real Estate Services Division
Project Management & Development Branch
707 Third Street, Suite 4-105
West Sacramento, California 95605

NICHOLS MELBURG & ROSSETTO
ARCHITECTS + ENGINEERS
300 Knollcrest Drive
Redding, CA 96002
(530) 222-3300 (530) 222-3538 FAX
http://www.nmrdesign.com

Copyright © 2021
All ideas, designs, arrangements and plans indicated or represented by this drawing are owned by, and the property of, NICHOLS, MELBURG and ROSSETTO and were created, evolved and developed for use on, and in conjunction with, the specified project. None of such ideas, designs, arrangements or plans shall be used by, or disclosed to any person, firm or corporation for any purpose whatsoever without the written permission of NICHOLS, MELBURG and ROSSETTO.

LICENSE STAMPS

STRUCTURAL CONSULTANT

LIONAKIS
1919 Nineteenth Street
Sacramento CA 95811
P 916.558.1900 F 916.558.1919
www.lionakis.com

DRAWING STATUS
CONSTRUCTION DOCUMENTS

ISSUE

No.	Date	Description
1	10/22/2020	INITIAL PLAN REVIEW
2	01/08/2021	AGENCY RESUBMITTAL
3	03/22/2021	AGENCY RESUBMITTAL

If drawing is not 30" x 42" it is a reduced print

PROJECT
RESIDENTIAL CENTER, UKIAH: REPLACEMENT OF EXISTING RESIDENTIAL CENTER
440 EAST HILL ROAD
WILLITS, CALIFORNIA 95490
MENDOCINO COUNTY
CALIFORNIA CONSERVATION CORP

Supervisor	Designed	Drawn
		Author

DSA Application No.
02-118630

SHEET TITLE
MEN'S HOUSING ROOF FRAMING PLAN

DGS Project Number	Lionakis Project Number
00000000001826	018322

Reference North: NORTH
Sheet Scale: As indicated
Sheet Number: S202HM

ISSUE DATE
July 9, 2021

Plot Date: 3/19/2021 11:20:20 AM
File Name: BIM 360://CCC Willits Residential Center/018322_S-MASTER_R18_CENTRAL.rvt

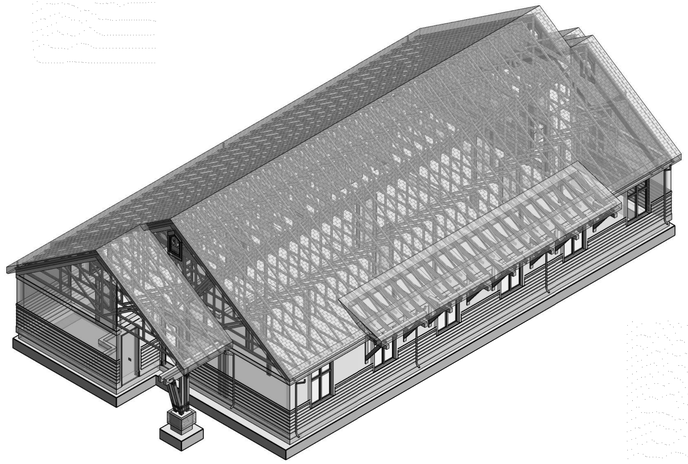

1 BUILDING HM - VIEW 1
SCALE

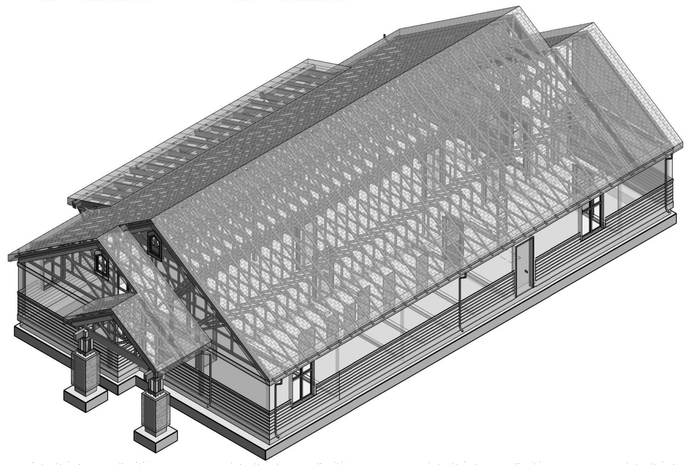

2 BUILDING HM - VIEW 2
SCALE

3D VIEW NOTES

170828. Q1

1. FRAMING SHOWN IN THESE VIEWS IS FOR GENERAL INFORMATION ONLY. THE BALANCE OF STRUCTURAL DOCUMENT TAKE PRECEDENCE OVER 3D VIEWS.
2. NOT ALL FRAMING MAY BE SHOWN. SEE CONSTRUCTION DOCUMENTS FOR ADDITIONAL FRAMING MEMBERS REQUIRED.

KEY PLAN

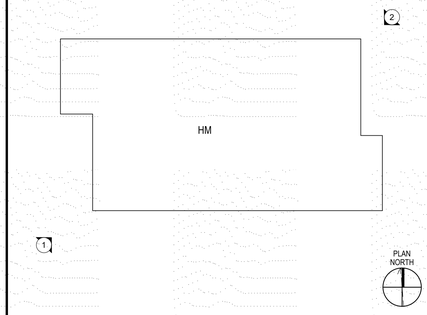

IDENTIFICATION STAMP
DIV. OF THE STATE ARCHITECT
APP: 02-118630 INC:
REVIEWED FOR
SS ☐ FLS ☐ ACS ☑
DATE: 04/13/2021

OFFICE OF THE STATE FIRE MARSHAL
APPROVED FIRE AND PANIC ONLY
Approval of this plan does not authorize or approve any omission or deviation from applicable regulations. Final approval is subject to field inspection. One set of approved plans shall be available on the project site at all times.
PERMIT NO. 20-N-2332-CP
REVIEWED BY: LEO CATAYLO, OSFM
DATE: 4 / /2021

GENERAL SERVICES
Department of General Services
State of California
Real Estate Services Division
Project Management & Development Branch
707 Third Street, Suite 4-105
West Sacramento, California 95605

NICHOLS MELBURG & ROSSETTO
ARCHITECTS + ENGINEERS
300 Knollcrest Drive
Redding, CA 96002
(530) 222-3300 (530) 222-3538 FAX
http://www.nmrdesign.com

Copyright © 2021
All ideas, designs, arrangements and plans indicated or represented by this drawing are owned by, and the property of, NICHOLS, MELBURG and ROSSETTO and were created, evolved and developed for use on, and in conjunction with, the specified project. None of such ideas, designs, arrangements or plans shall be used by, or disclosed to any person, firm or corporation for any purpose whatsoever without the written permission of NICHOLS, MELBURG and ROSSETTO.

LICENSE STAMPS

REGISTERED PROFESSIONAL ENGINEER
GEORGE E. HUNTINGFORD
No. S47599
CIVIL
STATE OF CALIFORNIA
3/19/2021

STRUCTURAL CONSULTANT

LIONAKIS
1919 Nineteenth Street
Sacramento CA 95811
P 916.558.1900 F 916.558.1919
www.lionakis.com

DRAWING STATUS
CONSTRUCTION DOCUMENTS

ISSUE

No.	Date	Description
1	10/22/2020	INITIAL PLAN REVIEW
2	01/08/2021	AGENCY RESUBMITTAL
3	03/22/2021	AGENCY RESUBMITTAL

If drawing is not 30" x 42" it is a reduced print

PROJECT
RESIDENTIAL CENTER, UKIAH: REPLACEMENT OF EXISTING RESIDENTIAL CENTER
440 EAST HILL ROAD
WILLITS, CALIFORNIA 95490
MENDOCINO COUNTY
CALIFORNIA CONSERVATION CORP

Supervisor	Designed	Drawn
		Author

DSA Application No.
02-118630

SHEET TITLE
MEN'S HOUSING 3D VIEWS

DGS Project Number: 00000000001826
Lionakis Project Number: 018322

Reference North
Sheet Scale: 12" = 1'-0"
Sheet Number: S211HM

ISSUE DATE
July 9, 2021

Plot Date: 3/19/2021 11:21:31 AM
File Name: BIM 360://CCO Willits Residential Center/018322_S-MASTER_R18_CENTRAL.rvt

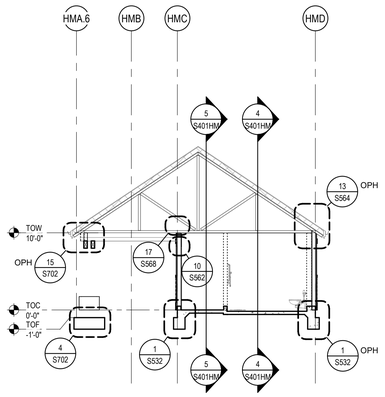

1 BLDG HM - BUILDING SECTION

SCALE 1/8" = 1'-0"

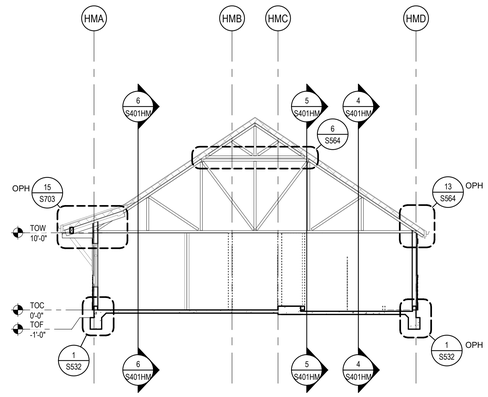

2 BLDG HM - BUILDING SECTION

SCALE 1/8" = 1'-0"

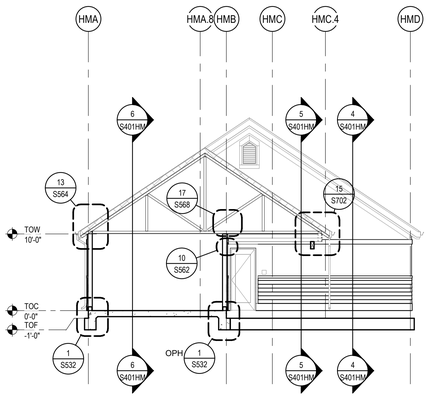

3 BLDG HM - BUILDING SECTION

SCALE 1/8" = 1'-0"

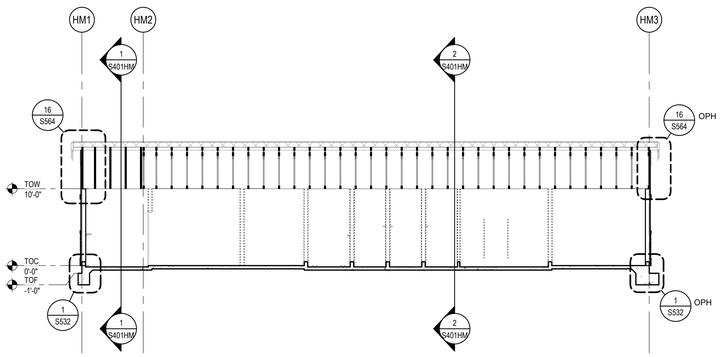

4 BLDG HM - BUILDING SECTION

SCALE 1/8" = 1'-0"

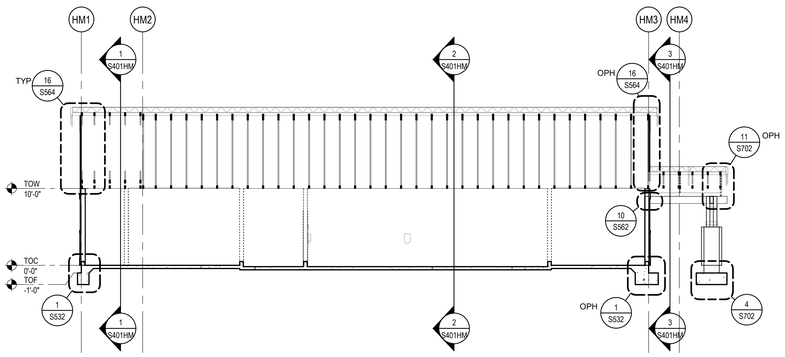

5 BLDG HM - BUILDING SECTION

SCALE 1/8" = 1'-0"

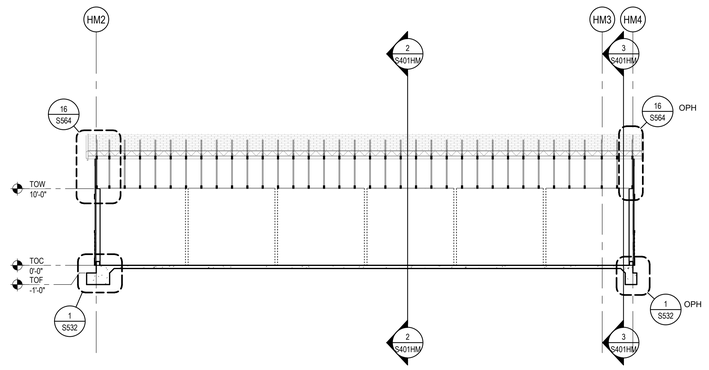

6 BLDG HM - BUILDING SECTION

SCALE 1/8" = 1'-0"

KEY PLAN

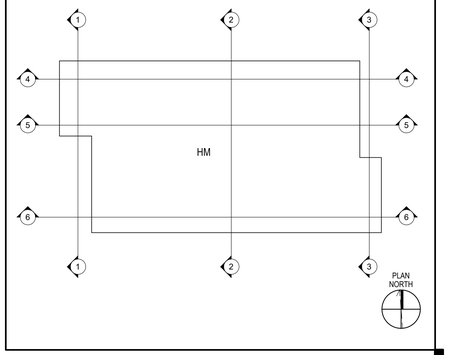

IDENTIFICATION STAMP
DIV. OF THE STATE ARCHITECT
APP: 02-118630 INC:
REVIEWED FOR
SS ☐ FLS ☐ ACS ☑
DATE: 04/13/2021

OFFICE OF THE STATE FIRE MARSHAL
APPROVED FIRE AND PANIC ONLY
Approval of this plan does not authorize or approve any omission or deviation from applicable regulations. Final approval is subject to field inspection. One set of approved plans shall be available on the project site at all times.
PERMIT NO. 20-N-2332-CP
REVIEWED BY: LEO CATAYLO, OSFM
DATE: 4 / /2021

DGS GENERAL SERVICES
Department of General Services
State of California
Real Estate Services Division
Project Management & Development Branch
707 Third Street, Suite 4-105
West Sacramento, California 95605

NICHOLS MELBURG & ROSSETTO
ARCHITECTS + ENGINEERS
300 Knollcrest Drive
Redding, CA 96002
(530) 222-3300 (530) 222-3538 FAX
http://www.nmrdesign.com

Copyright © 2021
All ideas, designs, arrangements and plans indicated or represented by this drawing are owned by, and the property of, NICHOLS, MELBURG and ROSSETTO and were created, evolved and developed for use on, and in conjunction with, the specified project. None of such ideas, designs, arrangements or plans shall be used by, or disclosed to any person, firm or corporation for any purpose whatsoever without the written permission of NICHOLS, MELBURG and ROSSETTO.

LICENSE STAMPS

REGISTERED PROFESSIONAL ENGINEER — CHRISTINE HUNTINGFORD — No. S47589 — STRUCTURAL — STATE OF CALIFORNIA
3/19/2021

STRUCTURAL CONSULTANT

LIONAKIS
1919 Nineteenth Street
Sacramento CA 95811
P 916.558.1900 F 916.558.1919
www.lionakis.com

DRAWING STATUS
CONSTRUCTION DOCUMENTS

ISSUE

No.	Date	Description
1	10/22/2020	INITIAL PLAN REVIEW
2	01/08/2021	AGENCY RESUBMITTAL
3	03/22/2021	AGENCY RESUBMITTAL

If drawing is not 30" x 42" it is a reduced print

PROJECT
RESIDENTIAL CENTER, UKIAH: REPLACEMENT OF EXISTING RESIDENTIAL CENTER
440 EAST HILL ROAD
WILLITS, CALIFORNIA 95490
MENDOCINO COUNTY
CALIFORNIA CONSERVATION CORP

Supervisor	Designed	Drawn
		Author

DSA Application No.
02-118630

SHEET TITLE
MEN'S HOUSING STRUCTURAL BUILDING SECTIONS

DGS Project Number: 00000000001826
Lionakis Project Number: 018322

Reference North
Sheet Scale: 1/8" = 1'-0"
Sheet Number: S401HM

ISSUE DATE
July 9, 2021

Plot Date: 3/19/2021 11:23:27 AM
File Name: BIM 360://CCC Willits Residential Center/018322_S-MASTER_R18_CENTRAL.rvt

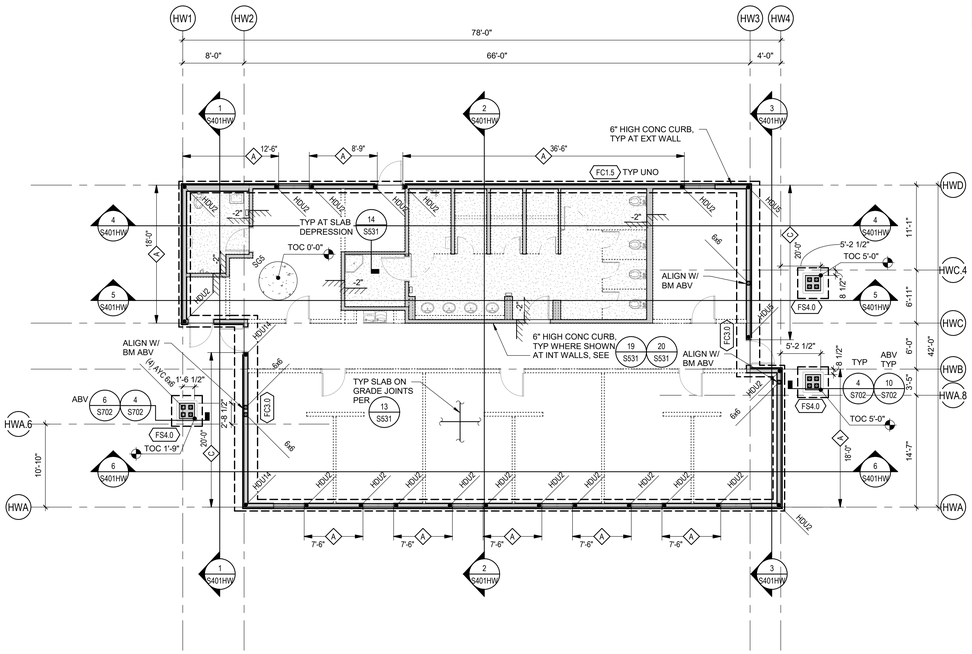

1 WOMEN'S HOUSING BUILDING FLOOR PLAN

SCALE 1/8" = 1'-0"

NORTH

SHEAR WALL SCHEDULE

S- 060600. N001A
170126. Q2

WALL MARK	SP EDGE NAILING	SILL PLATE THICKNESS	STUDS OR BLKG AT PANEL EDGES	SILL PLATE ANCHORAGE		STRUCTURAL PANEL 15/32" STRUCT I
				AB'S TO CONC	NAILS TO WOOD FRAMING	
A	8D @ 6" OC	2X	2X	5/8" DIA @ 48" OC	16D @ 6" OC	ONE SIDE
B	8D @ 4" OC	3X	3X	5/8" DIA @ 40" OC	SEE SECTIONS AND DETAILS	ONE SIDE
C	8D @ 3" OC	3X	3X	5/8" DIA @ 32" OC		ONE SIDE
D	8D @ 2" OC	3X	3X	5/8" DIA @ 24" OC		ONE SIDE
E	8D @ 4" OC	3X	3X	5/8" DIA @ 16" OC		BOTH SIDES
F	8D @ 3" OC	3X	3X	5/8" DIA @ 8" OC		BOTH SIDES
G	10D @ 2" OC	3X	3X	5/8" DIA @ 8" OC		BOTH SIDES

1. SEE 18/S563 FOR TYP SHEAR WALL SP LAYOUT.
2. EDGE NAILING OCCURS AT EVERY PANEL EDGE. FIELD NAILING SHALL BE 8D @ 12" OC, EXCEPT AT TYPE G FIELD NAILING SHALL BE 10D @ 12" OC.
3. NAILS SHALL BE STEEL WIRE COMMON TYPE OF THE SIZES DENOTED. DRIVE STRUCTURAL PANEL NAILS SO THAT THE NAIL HEADS ARE FLUSH WITH THE SURFACE OF THE PANEL. DO NOT OVERDRIVE NAILS. STAGGER NAILS AT EACH SIDE OF JOINTS.
4. STRUCTURAL PANELS SHALL HAVE A PANEL SPAN RATING OF 32/16. OSB OR 5-PLY/5-LAYER PLYWOOD.
5. BLOCK PANEL EDGES WITH FULL STUD WIDTH BLOCKING OF THICKNESS SPECIFIED.
6. SILL PLATE NAILING IS TO PARALLEL FRAMING BELOW (WHETHER BLKG OR CONT). PROVIDE (2) ADDITIONAL NAILS OF SIZE SHOWN TO EA PERPENDICULAR FRAMING BELOW.
7. PREDRILL NAIL HOLES IF SPLITTING OCCURS. STAGGER NAILING TO PREVENT SPLITTING.
8. WHERE STRUCTURAL PANELS OCCUR AT BOTH SIDES OF WALL, STAGGER PANEL JOINTS AT EACH FACE SO THEY DO NOT FALL ON THE SAME STUD OR BLOCKING.
9. FA SPACING AT SHEAR WALLS SHALL BE 3X THE EDGE NAIL SPACING FOR ONE-SIDED SHEAR WALLS, AND 6" OC FOR WALLS WITH STRUCTURAL PANELS ON BOTH SIDES.
10. PROVIDE STRUCTURAL PANELS FULL LENGTH AND HEIGHT OF ALL EXTERIOR WALLS AND AT INTERIOR WALLS AS SHOWN ON SECTIONS AND DETAILS. MINIMUM STRUCTURAL PANEL NAILING SHALL BE TYPE A UNO. SEE PLANS FOR HEAVIER NAILING LOCATIONS NOTED BY WALL MARKS THUS:

MIN LENGTH OF SHEAR WALL SEGMENT (NOT ACTUAL LENGTH)
SEE SECTIONS & DETAILS FOR SIDE OF WALL REQUIRING STRUCTURAL PANELS, UNO ON SECTIONS OR DETAILS, SP SHALL BE ON THE SIDE WHERE TAG IS SHOWN

X'-X"
X
WALL LINE

WHERE EXTENT IS INDICATED, REMAINDER OF WALL LINE REQUIRES TYPE A UNO

IF NO EXTENT IS INDICATED THE ENTIRE WALL LINE REQUIRES THE TYPE NOTED

NOTES

170828. Q2

1. SEE S000 SERIES SHEETS FOR GENERAL NOTES & S500 SERIES SHEETS FOR TYPICAL DETAILS.
2. DIMENSIONS ARE TO FOS OR CENTERLINE OF COLUMNS/POSTS, UNO. SEE SECTIONS & DETAILS FOR FOC LOCATIONS RELATIVE TO FOS.
3. SEE ARCH & OTHER CONSULTANT DWGS FOR DIMENSIONS & LOCATIONS OF WALL OPENINGS.
4. SEE ARCH DWGS FOR DIMENSIONS OF SLAB DEPRESSIONS & SLOPED SLABS.
5. SEE ARCH & OTHER CONSULTANT DWGS FOR PENETRATIONS NOT SHOWN. COMPLY WITH TYPICAL DETAILS.
6. SEE CIVIL DRAWINGS AND SPECIFICATIONS FOR ENGINEERED FILL.
7. EXTERIOR CONCRETE FLATWORK IS NOT SHOWN, SEE CIVIL & ARCH DWGS.
8. CONTINUOUS WALL FOOTINGS TO BE CENTERED UNDER WALLS AND PAD FOOTINGS TO BE CENTERED UNDER COLUMNS, TYP UNO.
9. TOP OF FOOTINGS SHALL BE 1'-0" BELOW FINISHED FLOOR (TOF -1'-0"), TYP UNO. SEE ARCH & OTHER CONSULTANT DRAWINGS FOR UTILITIES THAT WILL AFFECT FOOTINGS AND COMPLY WITH TYPICAL DETAILS.
10. CONTINUOUS FOOTINGS ARE FC1.5, TYP UNO. SEE SCHEDULE FOR CONTINUOUS FOOTING SIZE & REINF.
11. CONCRETE SLAB OVER SUB BASE SHALL BE SG5, TYP UNO. SEE SCHEDULE FOR MORE INFORMATION.
12. EXTERIOR WALLS ARE 2x6 STUDS @ 16" OC, TYP UNO.
13. TOC = 0'-0" TYP UNO (SEE CIVIL DRAWINGS FOR DATUM ELEVATION).

SCHEDULES

DECK SCHEDULE

TYPE	DESCRIPTION
SG5	5" CONC W/ #4 @ 16" OC EA WAY CENTERED IN SLAB O/ VAPOR RETARDER O/ 4" FREE DRAINING CRUSHED ROCK
SG12	12" CONC W/ #4 @ 16" OC T&B EA WAY O/ VAPOR RETARDER O/ 4" FREE DRAINING CRUSHED ROCK

CONTINUOUS FOOTING SCHEDULE

TYPE	WIDTH	DEPTH	REINFORCEMENT
FC1.5	1'-6"	1'-6"	(2) CONT #5 T&B
FC2.0	2'-0"	1'-6"	(3) CONT #5 T&B
FC3.0	3'-0"	1'-6"	(4) CONT #5 T&B AND #4 TIES @ 18" OC
FC3.1	3'-0"	2'-0"	(4) CONT #5 T&B AND #4 TIES @ 18" OC
FC4.0	4'-0"	1'-6"	(5) CONT #5 T&B AND #4 TIES @ 18" OC
FC4.1	4'-0"	2'-0"	(5) CONT #5 T&B AND #4 TIES @ 18" OC

SPREAD FOOTING SCHEDULE

TYPE	SIZE	DEPTH	REINFORCEMENT
FS2.0	2'-0"x2'-0"	1'-6"	(3) #5 EW AT BOT
FS3.0	3'-0"x3'-0"	1'-6"	(4) #5 EW AT BOT
FS4.0	4'-0"x4'-0"	1'-6"	(5) #5 EW AT BOT
FS4.1	4'-0"x4'-0"	2'-0"	(7) #5 EW AT BOT
FS5.0	5'-0"x5'-0"	1'-6"	(7) #5 EW AT BOT
FS5.1	5'-0"x5'-0"	2'-0"	(9) #5 EW AT BOT
FS6.1	6'-0"x4'-0"	1'-6"	#5 @ 12" OC EW AT BOT
FS7.1	7'-0"x7'-0"	2'-0"	(9) #6 EW AT BOT

LEGEND

170828. Q1

- (E) ELEMENTS SHOWN FADED - LINETYPE AND PATTERN/HATCHING AS NOTED FOR NEW CONSTRUCTION
- STRUCTURAL WALL, SEE 10/S561
- NON-STRUCTURAL WALL, SAD, FOR ATTACHMENT, SEE 4/S561
- CONCRETE CURB OR PAD
- DEPRESSED SLAB AREA
- SAD FOR EXTENTS
- SLAB STEP SYMBOL
- -Z- ELEVATION RELATIVE TO TOC
- ST CT DT CONC SLAB / PLYWOOD / CLT DECK (SOLID LINE INDICATED SPAN OF DIRECTION OF CLT)
- COL SIZE COLUMN WITH CALLOUT
- HD SIZE / POST SIZE HOLDOWN & REQUIRED POST, SEE 16/S563
- A SHEAR WALL TYPE, SEE "SHEAR WALL SCHEDULE"
- FCX.X CONTINUOUS FOOTING TAG
- FSX.X SPREAD FOOTING TAG
- FOOTING
- S S STEPPED FOOTING

KEY PLAN

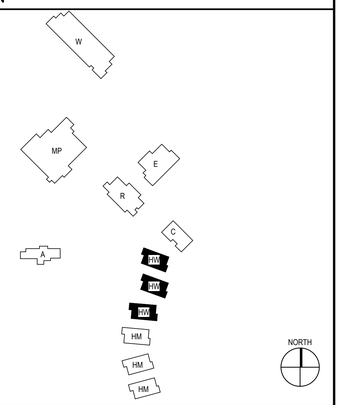

IDENTIFICATION STAMP
DIV. OF THE STATE ARCHITECT
APP: 02-118630 INC:
REVIEWED FOR
SS ☐ FLS ☐ ACS ☑
DATE: 04/13/2021

OFFICE OF THE STATE FIRE MARSHAL
APPROVED FIRE AND PANIC ONLY
Approval of this plan does not authorize or approve any omission or deviation from applicable regulations. Final approval is subject to field inspection. One set of approved plans shall be available on the project site at all times.
PERMIT NO. 20-N-2332-CP
REVIEWED BY: LEO CATAYLO, OSFM
DATE: 4 / /2021

DGS GENERAL SERVICES
Department of General Services
State of California
Real Estate Services Division
Project Management & Development Branch
707 Third Street, Suite 4-105
West Sacramento, California 95605

NICHOLS MELBURG & ROSSETTO ARCHITECTS + ENGINEERS
300 Knollcrest Drive
Redding, CA 96002
(530) 222-3300 (530) 222-3538 FAX
http://www.nmrdesign.com

Copyright © 2021
All ideas, designs, arrangements and plans indicated or represented by this drawing are owned by, and the property of, NICHOLS, MELBURG and ROSSETTO and were created, evolved and developed for use on, and in conjunction with, the specified project. None of such ideas, designs, arrangements or plans shall be used by, or disclosed to any person, firm or corporation for any purpose whatsoever without the written permission of NICHOLS, MELBURG and ROSSETTO.

LICENSE STAMPS

REGISTERED PROFESSIONAL ENGINEER — JORDON E. HUNTINGTON — No. 54789 — STRUCTURAL — STATE OF CALIFORNIA
3/19/2021

STRUCTURAL CONSULTANT

LIONAKIS
1919 Nineteenth Street
Sacramento CA 95811
P 916.558.1900 F 916.558.1919
www.lionakis.com

DRAWING STATUS
CONSTRUCTION DOCUMENTS

ISSUE

No.	Date	Description
1	10/22/2020	INITIAL PLAN REVIEW
2	01/08/2021	AGENCY RESUBMITTAL
3	03/22/2021	AGENCY RESUBMITTAL

If drawing is not 30" x 42" it is a reduced print

PROJECT
RESIDENTIAL CENTER, UKIAH: REPLACEMENT OF EXISTING RESIDENTIAL CENTER
440 EAST HILL ROAD
WILLITS, CALIFORNIA 95490
MENDOCINO COUNTY
CALIFORNIA CONSERVATION CORP

Supervisor	Designed	Drawn
		Author

DSA Application No.
02-118630

SHEET TITLE
WOMEN'S HOUSING FOUNDATION PLAN

DGS Project Number	Lionakis Project Number
000000000001826	018322

Reference North — NORTH
Sheet Scale: As indicated
Sheet Number: S201HW

ISSUE DATE
July 9, 2021

Plot Date: 3/19/2021 11:19:09 AM
File Name: BIM 360:///CCC Willits Residential Center/018322_S-MASTER_R18_CENTRAL.rvt

TRUSS SCHEDULE	
DESIGNATION	TRUSS CONFIGURATION
T-HW1	HWA.6 (8 / 12) HWC (12 / 8) HWD; BEAM, SEE PLAN; SEE PLAN
T-HW2	HWA (8 / 12) HWD (12 / 8); VENT AT GABLE END WHERE OCCURS, SAD, COORDINATE TRUSS WEBS AS REQ; CAP TRUSS AS REQ BY MFR, SEE 6/S564; COLLECTOR TRUSS PLAY = SEE PLAN
T-HW3	HWA (8 / 12) HWB (12 / 8) HWC.4; VENT AT GABLE END WHERE OCCURS, SAD, COORDINATE TRUSS WEBS AS REQ; BEAM, SEE PLAN; SEE PLAN
T-HW4	HWA.8 (8 / 12) HWC.4 (8 / 12); BEAM, SEE PLAN; SEE PLAN; SEE PLAN

NOTES:
1. TRUSS CONFIGURATIONS SHOWN ARE A DIAGRAMATIC OUTLINE INDICATING BEARING SUPPORTS. TRUSS WEB MEMBERS ARE NOT SHOWN AND MAY VARY BETWEEN TRUSS MANUFACTURERS.
2. REFER TO "METAL-PLATE WOOD TRUSSES" NOTES ON SHEET S012 FOR TRUSS DESIGN AND DETAILING REQUIREMENTS.
3. MANUFACTURED ROOF TRUSS LOADS AS SHOWN ON PLAN ARE UNFACTORED DESIGN LOADS. WIND AND SEISMIC LOADS ARE LRFD DESIGN LEVEL FORCES. LOADS SHOWN ON PLAN ARE IN ADDITION TO THE TRUSS DESIGN/LOADING AND DETAILING REQUIREMENTS ON SHEET S012.
4. BEARING POINTS ARE SHOWN AT GRIDS. SEE DETAILS FOR FACE OF STUD RELATIVE TO BEARING LENGTH AND LOCATION. SEE DETAILS FOR WHERE LEDGERS, TRUSS HANGERS OR BEAMS ARE USED AS BEARING POINTS.
5. PROVIDE DIAPHRAGM BOUNDARY NAILING PATTERN AT COLLECTOR TRUSSES, UNO.

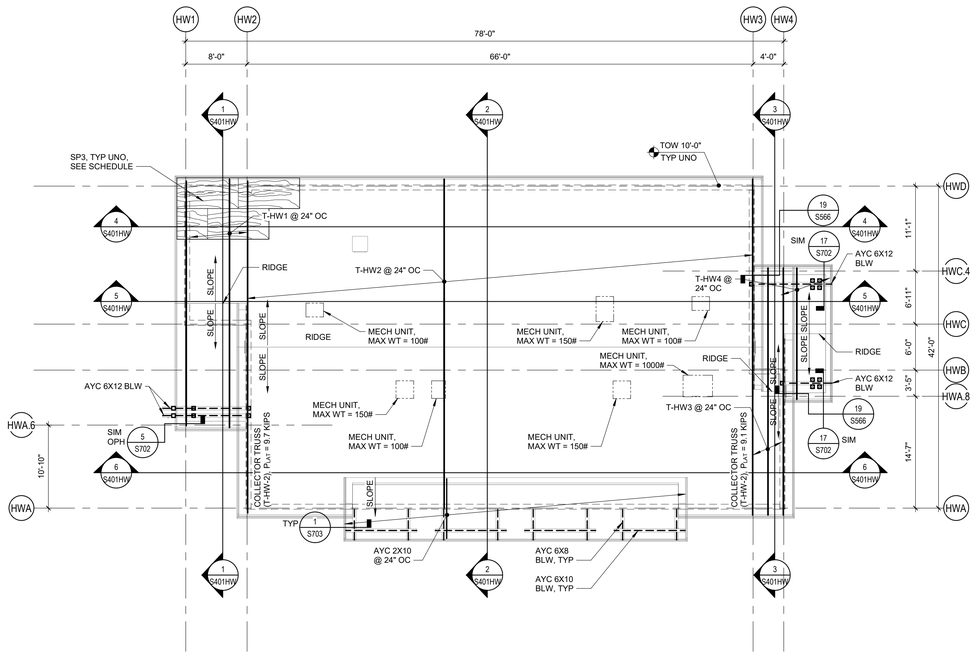

1 WOMEN'S HOUSING BUILDING ROOF FRAMING PLAN

SCALE 1/8" = 1'-0"

NORTH

NOTES

S- 010000_N001A
170828. Q2

1. SEE S000 SERIES SHEETS FOR GENERAL NOTES & S500 SERIES SHEETS FOR TYPICAL DETAILS.
2. SEE S200 SERIES SHEETS FOR WALL & FRAMING ELEVATIONS.
3. DIMENSIONS ARE TO FOS OR CENTERLINE OF COLUMNS/POSTS, UNO.
4. SEE ARCH & OTHER CONSULTANT DWGS FOR DIMENSIONS & LOCATIONS OF WALL OPENINGS. SEE TYPICAL DETAILS FOR FRAMING AT OPENINGS.
5. SEE ARCH & OTHER CONSULTANT DWGS FOR ROOF PENETRATIONS NOT SHOWN. PROVIDE FRAMING AROUND OPENINGS PER TYPICAL DETAILS. SAWCUT OR CORE DRILL CLEAN HOLES WITH NO OVERCUTTING. CONFORM WITH TYPICAL DETAILS.
6. SEE ARCH DWGS FOR DIMENSIONS OF ROOF OVERHANGS, UNO.
7. EXTERIOR WALLS ARE 2x6 STUDS @ 16" OC, TYP UNO.
8. PROVIDE STRUCTURAL PANEL EDGE NAILING TO THE FULL LENGTH OF ALL GLB's, AND MANUFACTURED TRUSSES, I-JOISTS, RIM JOISTS AND BLOCKING AT SHEAR WALLS. SEE PLANS FOR LOCATIONS WHERE DOUBLE ROWS OF EDGE NAILING OCCUR.
9. CAMBER IN GLU-LAM BEAMS SHALL BE 1600' RADIUS, TYP UNO.
10. SEE S-000 SHEETS FOR MANUFACTURED ROOF TRUSS DESIGN CRITERIA.
11. AT EXTERIOR EXPOSED WOOD PROVIDE ALASKAN YELLOW CEDAR, REFER TO DETAILS.

SP NAILING SCHEDULE

S- 061100_N001A
170126. Q2

WOOD STRUCTURAL PANEL NAILING SCHEDULE (UNO)	
- PROVIDE 1/8" SPACE BETWEEN SHEETS FOR ALL SP SHEATHING. - MIN SHEET WIDTH SHALL BE 24" FOR ROOF & FLOOR, 12" FOR WALLS. - SEE 17/S563 FOR TYP STRUCTURAL PANEL LAYOUT.	
SP3 - 19/32" STRUCT I SP, APA SPAN RATED 40/20 ARRANGE SHEETS AS SHOWN ON ROOF FRAMING PLAN	
EN AT PERIMETER OF EA SHEET FN AT INTERIOR CONTACTS OF EA SHEET BN AT PERIMETER OF ROOF	8D @ 4" OC 8D @ 12" OC 8D @ 4" OC
SIDE JOINTS TO BE BLOCKED PER 17/S563.	

LEGEND

180621
Q1

- (E) ELEMENTS SHOWN FADED - LINETYPE AND PATTERN/HATCHING AS NOTED FOR NEW CONSTRUCTION
- STRUCTURAL WALL, SEE 10/S561
- NON-STRUCTURAL WALL, SAD, FOR ATTACHMENT, SEE 4/S561
- CONCRETE CURB OR PAD — 10/S561
- DEPRESSED SLAB AREA
- SAD FOR EXTENTS
- SLAB STEP SYMBOL
- "Z" ELEVATION RELATIVE TO TOC
- CONC SLAB / PLYWOOD / CLT DECK (SOLID LINE INDICATED SPAN OF DIRECTION OF CLT) (SF, CF, DF)
- COL SIZE / HD SIZE / POST SIZE — COLUMN WITH CALLOUT
- HOLDOWN & REQUIRED POST, SEE 16/S563
- A — SHEAR WALL TYPE, SEE "SHEAR WALL SCHEDULE"
- W24X55 — BEAM SIZE
- C=2" — BEAM CAMBER
- S — BEAM SPLICE
- TRUSS W/ SUPERIMPOSED LOADS

KEY PLAN

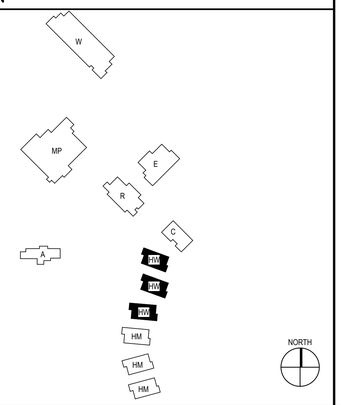

NORTH

NORTH

IDENTIFICATION STAMP
DIV. OF THE STATE ARCHITECT
APP: 02-118630 INC:
REVIEWED FOR
SS ☐ FLS ☐ ACS ☑
DATE: 04/13/2021

OFFICE OF THE STATE FIRE MARSHAL
APPROVED FIRE AND PANIC ONLY
Approval of this plan does not authorize or approve any omission or deviation from applicable regulations. Final approval is subject to field inspection. One set of approved plans shall be available on the project site at all times.
PERMIT NO. 20-N-2332-CP
REVIEWED BY: LEO CATAYLO, OSFM
DATE: 4 / /2021

DGS GENERAL SERVICES
Department of General Services
State of California
Real Estate Services Division
Project Management & Development Branch
707 Third Street, Suite 4-105
West Sacramento, California 95605

NICHOLS MELBURG & ROSSETTO ARCHITECTS + ENGINEERS
300 Knollcrest Drive
Redding, CA 96002
(530) 222-3300 (530) 222-3538 FAX
http://www.nmrdesign.com

Copyright © 2021
All ideas, designs, arrangements and plans indicated or represented by this drawing are owned by, and the property of, NICHOLS, MELBURG and ROSSETTO and were created, evolved and developed for use on, and in conjunction with, the specified project. None of such ideas, designs, arrangements or plans shall be used by, or disclosed to any person, firm or corporation for any purpose whatsoever without the written permission of NICHOLS, MELBURG and ROSSETTO.

LICENSE STAMPS

REGISTERED PROFESSIONAL ENGINEER — JORDAN E. HUNTINGTON — No. 54789 — STRUCTURAL — STATE OF CALIFORNIA — 3/19/2021

STRUCTURAL CONSULTANT

LIONAKIS
1919 Nineteenth Street
Sacramento CA 95811
P 916.558.1900 F 916.558.1919
www.lionakis.com

DRAWING STATUS
CONSTRUCTION DOCUMENTS

ISSUE

No.	Date	Description
1	10/22/2020	INITIAL PLAN REVIEW
2	01/08/2021	AGENCY RESUBMITTAL
3	03/22/2021	AGENCY RESUBMITTAL

If drawing is not 30" x 42" it is a reduced print

PROJECT
RESIDENTIAL CENTER, UKIAH: REPLACEMENT OF EXISTING RESIDENTIAL CENTER
440 EAST HILL ROAD
WILLITS, CALIFORNIA 95490
MENDOCINO COUNTY
CALIFORNIA CONSERVATION CORP

Supervisor	Designed	Drawn
		Author

DSA Application No.
02-118630

SHEET TITLE
WOMEN'S HOUSING ROOF FRAMING PLAN

DGS Project Number	Lionakis Project Number
00000000001826	018322

Reference North: NORTH
Sheet Scale: As indicated
Sheet Number: S202HW

ISSUE DATE
July 9, 2021

Plot Date: 3/19/2021 11:26:21 AM
File Name: BIM 360://CCC Willits Residential Center/018322_S-MASTER_R18_CENTRAL.rvt

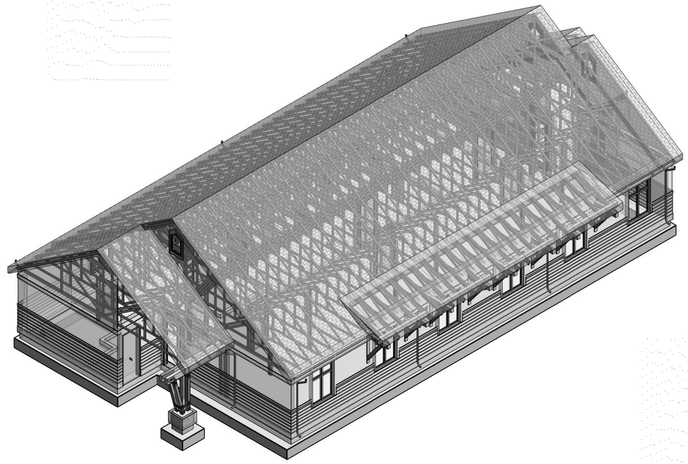

1 BUILDING HW - VIEW 1
SCALE

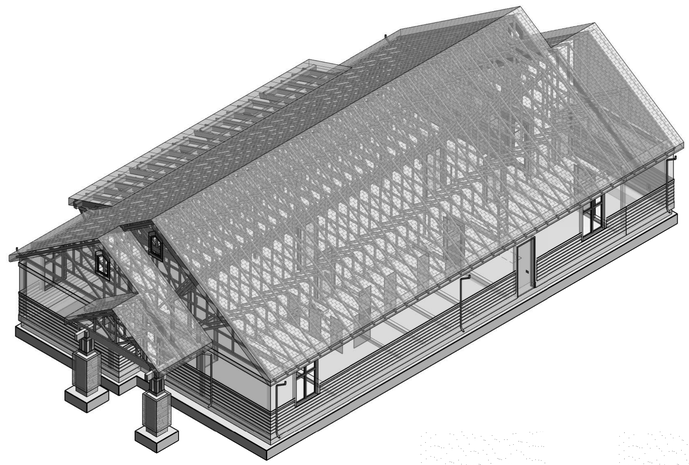

2 BUILDING HW - VIEW 2
SCALE

3D VIEW NOTES

170828. Q1

1. FRAMING SHOWN IN THESE VIEWS IS FOR GENERAL INFORMATION ONLY. THE BALANCE OF STRUCTURAL DOCUMENT TAKE PRECEDENCE OVER 3D VIEWS.
2. NOT ALL FRAMING MAY BE SHOWN. SEE CONSTRUCTION DOCUMENTS FOR ADDITIONAL FRAMING MEMBERS REQUIRED.

KEY PLAN

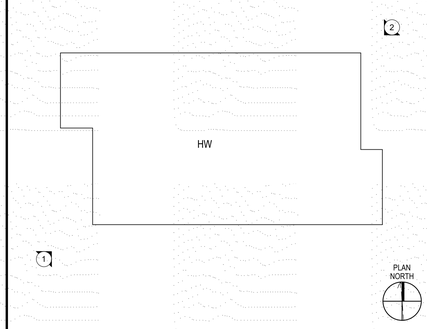

IDENTIFICATION STAMP
DIV. OF THE STATE ARCHITECT
APP: 02-118630 INC:
REVIEWED FOR
SS ☐ FLS ☐ ACS ☑
DATE: 04/13/2021

OFFICE OF THE STATE FIRE MARSHAL
APPROVED FIRE AND PANIC ONLY
Approval of this plan does not authorize or approve any omission or deviation from applicable regulations. Final approval is subject to field inspection. One set of approved plans shall be available on the project site at all times.
PERMIT NO. 20-N-2332-CP
REVIEWED BY: LEO CATAYLO, OSFM
DATE: 4 / /2021

GENERAL SERVICES
Department of General Services
State of California
Real Estate Services Division
Project Management & Development Branch
707 Third Street, Suite 4-105
West Sacramento, California 95605

NICHOLS MELBURG & ROSSETTO
ARCHITECTS + ENGINEERS
300 Knollcrest Drive
Redding, CA 96002
(530) 222-3300 (530) 222-3538 FAX
http://www.nmrdesign.com

Copyright © 2021
All ideas, designs, arrangements and plans indicated or represented by this drawing are owned by, and the property of, NICHOLS, MELBURG and ROSSETTO and were created, evolved and developed for use on, and in conjunction with, the specified project. None of such ideas, designs, arrangements or plans shall be used by, or disclosed to any person, firm or corporation for any purpose whatsoever without the written permission of NICHOLS, MELBURG and ROSSETTO.

LICENSE STAMPS

REGISTERED PROFESSIONAL ENGINEER
JEROME E. HUNTINGFORD
No. S47599
CIVIL
STATE OF CALIFORNIA
3/19/2021

STRUCTURAL CONSULTANT

LIONAKIS
1919 Nineteenth Street
Sacramento CA 95811
P 916.558.1900 F 916.558.1919
www.lionakis.com

DRAWING STATUS
CONSTRUCTION DOCUMENTS

ISSUE

No.	Date	Description
1	10/22/2020	INITIAL PLAN REVIEW
2	01/08/2021	AGENCY RESUBMITTAL
3	03/22/2021	AGENCY RESUBMITTAL

If drawing is not 30" x 42" it is a reduced print

PROJECT
RESIDENTIAL CENTER, UKIAH: REPLACEMENT OF EXISTING RESIDENTIAL CENTER
440 EAST HILL ROAD
WILLITS, CALIFORNIA 95490
MENDOCINO COUNTY
CALIFORNIA CONSERVATION CORP

Supervisor	Designed	Drawn
		Author

DSA Application No.
02-118630

SHEET TITLE
WOMEN'S HOUSING 3D VIEWS

DGS Project Number: 00000000001826
Lionakis Project Number: 018322

Reference North
Sheet Scale: 12" = 1'-0"
Sheet Number: S211HW

ISSUE DATE
July 9, 2021

Plot Date: 3/19/2021 11:21:46 AM
File Name: BIM 360://CCC Willits Residential Center/018322_S-MASTER_R18_CENTRAL.rvt

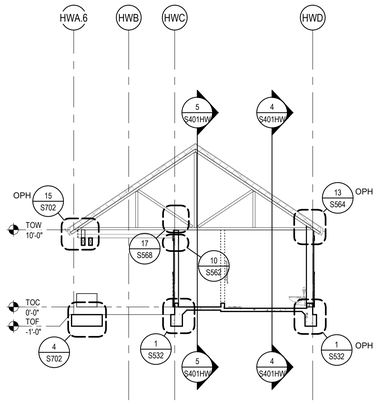

1 BLDG HW - BUILDING SECTION

SCALE 1/8" = 1'-0"

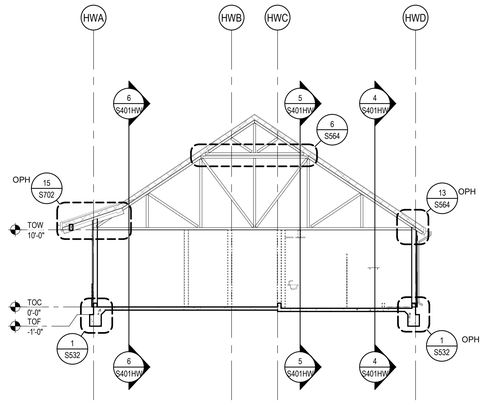

2 BLDG HW - BUILDING SECTION

SCALE 1/8" = 1'-0"

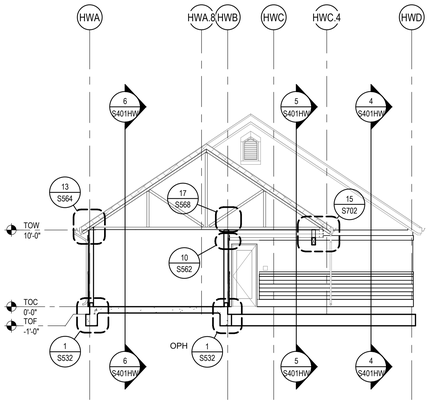

3 BLDG HW - BUILDING SECTION

SCALE 1/8" = 1'-0"

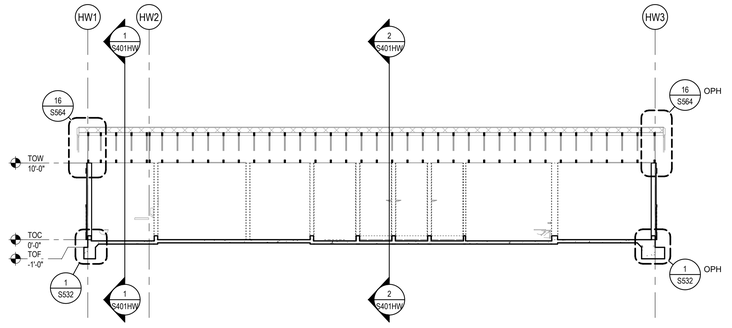

4 BLDG HW - BUILDING SECTION

SCALE 1/8" = 1'-0"

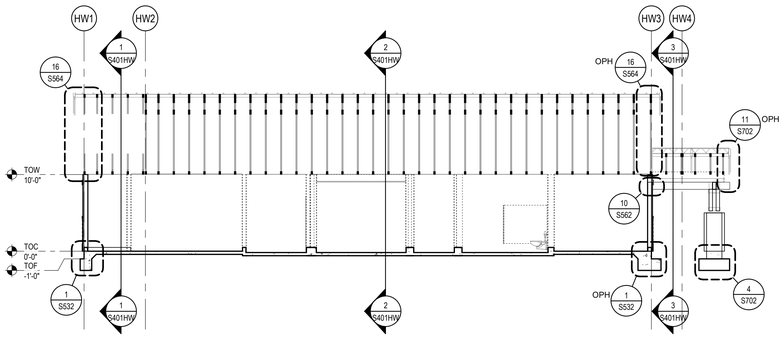

5 BLDG HW - BUILDING SECTION

SCALE 1/8" = 1'-0"

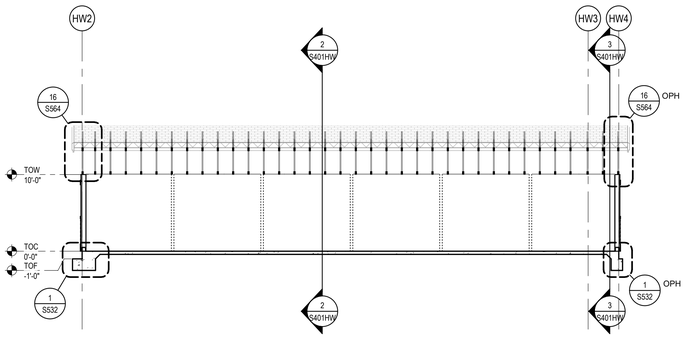

6 BLDG HW - BUILDING SECTION

SCALE 1/8" = 1'-0"

KEY PLAN

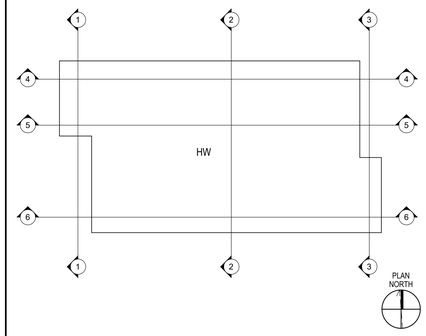

IDENTIFICATION STAMP
DIV. OF THE STATE ARCHITECT
APP: 02-118630 INC:
REVIEWED FOR
SS ☐ FLS ☐ ACS ☑
DATE: 04/13/2021

OFFICE OF THE STATE FIRE MARSHAL
APPROVED FIRE AND PANIC ONLY
Approval of this plan does not authorize or approve any omission or deviation from applicable regulations. Final approval is subject to field inspection. One set of approved plans shall be available on the project site at all times.
PERMIT NO. 20-N-2332-CP
REVIEWED BY: LEO CATAYLO, OSFM
DATE: 4/1/2021

DGS GENERAL SERVICES
Department of General Services
State of California
Real Estate Services Division
Project Management & Development Branch
707 Third Street, Suite 4-105
West Sacramento, California 95605

NICHOLS MELBURG & ROSSETTO
ARCHITECTS + ENGINEERS
300 Knollcrest Drive
Redding, CA 96002
(530) 222-3300 (530) 222-3538 FAX
http://www.nmrdesign.com

Copyright © 2021
All ideas, designs, arrangements and plans indicated or represented by this drawing are owned by, and the property of, NICHOLS, MELBURG and ROSSETTO and were created, evolved and developed for use on, and in conjunction with, the specified project. None of such ideas, designs, arrangements or plans shall be used by, or disclosed to any person, firm or corporation for any purpose whatsoever without the written permission of NICHOLS, MELBURG and ROSSETTO.

LICENSE STAMPS

REGISTERED PROFESSIONAL ENGINEER SIMONE E. HUNTINGTON No. S4??? STRUCTURAL STATE OF CALIFORNIA
3/19/2021

STRUCTURAL CONSULTANT

LIONAKIS
1919 Nineteenth Street
Sacramento CA 95811
P 916.558.1900 F 916.558.1919
www.lionakis.com

DRAWING STATUS
CONSTRUCTION DOCUMENTS

ISSUE

No.	Date	Description
1	10/22/2020	INITIAL PLAN REVIEW
2	01/08/2021	AGENCY RESUBMITTAL
3	03/22/2021	AGENCY RESUBMITTAL

If drawing is not 30" x 42" it is a reduced print

PROJECT
RESIDENTIAL CENTER, UKIAH: REPLACEMENT OF EXISTING RESIDENTIAL CENTER
440 EAST HILL ROAD
WILLITS, CALIFORNIA 95490
MENDOCINO COUNTY
CALIFORNIA CONSERVATION CORP

Supervisor	Designed	Drawn
		Author

DSA Application No.
02-118630

SHEET TITLE
WOMEN'S HOUSING
STRUCTURAL
BUILDING SECTIONS

DGS Project Number	Lionakis Project Number
000000000001826	018322

Reference North
Sheet Scale 1/8" = 1'-0"
Sheet Number S401HW

ISSUE DATE
July 9, 2021

Plot Date: 3/19/2021 11:20:30 AM
File Name: BIM 360://CCC Willits Residential Center/018322_S-MASTER_R18_CENTRAL.rvt

STUD WALL SCHEDULE

Q1

LABEL	STUD SIZE AND SPACING	MAX STUD LENGTH
S1	2X6 @ 16" OC	16'-0"
S2	2X6 LSL @ 16" OC	20'-0"
S3	2X8 @ 16" OC	23'-0"
S4	2X8 LVL @ 16" OC	28'-0"
S5	2X10 @ 16" OC	25'-0"
S6	2X10 LVL @ 16" OC	36'-0"
S7	2X12 @ 16" OC	30'-0"
S8	2X12 LVL @ 16" OC	39'-0"
S9	4X12 PSL @ 16" OC	42'-0"

NOTES:
1. EXTENTS SHOWN ON ELEVATIONS ARE APPOXIMATIONS ONLY. STUD SIZE SHALL BE GOVERNED BY MAX HEIGHT SHOWN IN TABLE ABOVE.
2. EXTERIOR STUD WALLS SHALL BE TYPE S1, EXCEPT AS LIMITED BY STUD LENGTH OR AS IDENTIFIED ON PLANS, TYP UNO.
3. STUD SIZES BASED OFF L/120 FLEXIBLE FINISHES. STUD SIZES AT WALLS WITH VENEER, PLASTER OR BRITTLE FINISHES SHALL BE PER SEOR.

SCHEDULES

DECK SCHEDULE

TYPE	DESCRIPTION
SG5	5" CONC W/ #4 @ 16" OC EA WAY CENTERED IN SLAB O/ VAPOR RETARDER O/ 4" FREE DRAINING CRUSHED ROCK
SG12	12" CONC W/ #4 @ 16" OC T&B EA WAY O/ VAPOR RETARDER O/ 4" FREE DRAINING CRUSHED ROCK

CONTINUOUS FOOTING SCHEDULE

TYPE	WIDTH	DEPTH	REINFORCEMENT
FC1.5	1'-6"	1'-6"	(2) CONT #5 T&B
FC2.0	2'-0"	1'-6"	(3) CONT #5 T&B
FC3.0	3'-0"	1'-6"	(4) CONT #5 T&B AND #4 TIES @ 18" OC
FC3.1	3'-0"	2'-0"	(4) CONT #5 T&B AND #4 TIES @ 18" OC
FC4.0	4'-0"	1'-6"	(5) CONT #5 T&B AND #4 TIES @ 18" OC
FC4.1	4'-0"	2'-0"	(5) CONT #5 T&B AND #4 TIES @ 18" OC

SPREAD FOOTING SCHEDULE

TYPE	SIZE	DEPTH	REINFORCEMENT
FS2.0	2'-0"x2'-0"	1'-6"	(3) #5 EW AT BOT
FS3.0	3'-0"x3'-0"	1'-6"	(4) #5 EW AT BOT
FS4.0	4'-0"x4'-0"	1'-6"	(5) #5 EW AT BOT
FS4.1	4'-0"x4'-0"	2'-0"	(7) #5 EW AT BOT
FS5.0	5'-0"x5'-0"	1'-6"	(7) #5 EW AT BOT
FS5.1	5'-0"x5'-0"	2'-0"	(9) #5 EW AT BOT
FS6.1	6'-0"x4'-0"	1'-6"	#5 @ 12" OC EW AT BOT
FS7.1	7'-0"x7'-0"	2'-0"	(9) #6 EW AT BOT

NOTES

170828. Q2

1. SEE S000 SERIES SHEETS FOR GENERAL NOTES & S500 SERIES SHEETS FOR TYPICAL DETAILS.
2. DIMENSIONS ARE TO FOS OR CENTERLINE OF COLUMNS/POSTS, UNO. SEE SECTIONS & DETAILS FOR FOC LOCATIONS RELATIVE TO FOS.
3. SEE ARCH & OTHER CONSULTANT DWGS FOR DIMENSIONS & LOCATIONS OF WALL OPENINGS.
4. SEE ARCH DWGS FOR DIMENSIONS OF SLAB DEPRESSIONS & SLOPED SLABS.
5. SEE ARCH & OTHER CONSULTANT DWGS FOR PENETRATIONS NOT SHOWN. COMPLY WITH TYPICAL DETAILS.
6. SEE CIVIL DRAWINGS AND SPECIFICATIONS FOR ENGINEERED FILL.
7. EXTERIOR CONCRETE FLATWORK IS NOT SHOWN, SEE CIVIL & ARCH DWGS.
8. CONTINUOUS WALL FOOTINGS TO BE CENTERED UNDER WALLS AND PAD FOOTINGS TO BE CENTERED UNDER COLUMNS, TYP UNO.
9. TOP OF FOOTINGS SHALL BE 1'-0" BELOW FINISHED FLOOR (TOF -1'-0"), TYP UNO. SEE ARCH & OTHER CONSULTANT DRAWINGS FOR UTILITIES THAT WILL AFFECT FOOTINGS AND COMPLY WITH TYPICAL DETAILS.
10. CONTINUOUS FOOTINGS ARE FC1.5, TYP UNO. SEE SCHEDULE FOR CONTINUOUS FOOTING SIZE & REINF.
11. CONCRETE SLAB OVER SUB BASE SHALL BE SG5, TYP UNO. SEE SCHEDULE FOR MORE INFORMATION..
12. EXTERIOR WALLS SHALL BE PER THE STUD WALL SCHEDULE, UNO.
13. TOC = 0'-0" TYP UNO (SEE CIVIL DRAWINGS FOR DATUM ELEVATIONS).

SHEAR WALL SCHEDULE

S- 060600_N001A
170126. Q2

WALL MARK	SP EDGE NAILING	SILL PLATE THICKNESS	STUDS OR BLKG AT PANEL EDGES	SILL PLATE ANCHORAGE: AB'S TO CONC	SILL PLATE ANCHORAGE: NAILS TO WOOD FRAMING	STRUCTURAL PANEL 15/32" STRUCT I
A	8D @ 6" OC	2X	2X	5/8" DIA @ 48" OC	16D @ 6" OC	ONE SIDE
B	8D @ 4" OC	3X	3X	5/8" DIA @ 40" OC	SEE SECTIONS AND DETAILS	ONE SIDE
C	8D @ 3" OC	3X	3X	5/8" DIA @ 32" OC		ONE SIDE
D	8D @ 2" OC	3X	3X	5/8" DIA @ 24" OC		ONE SIDE
E	8D @ 4" OC	3X	3X	5/8" DIA @ 16" OC		BOTH SIDES
F	8D @ 3" OC	3X	3X	5/8" DIA @ 8" OC		BOTH SIDES
G	10D @ 2" OC	3X	3X	5/8" DIA @ 8" OC		BOTH SIDES

1. SEE 18/S563 FOR TYP SHEAR WALL SP LAYOUT.
2. EDGE NAILING OCCURS AT EVERY PANEL EDGE. FIELD NAILING SHALL BE 8D @ 12" OC, EXCEPT AT TYPE (G) FIELD NAILING SHALL BE 10D @ 12" OC.
3. NAILS SHALL BE STEEL WIRE COMMON TYPE OF THE SIZES DENOTED. DRIVE STRUCTURAL PANEL NAILS SO THAT THE NAIL HEADS ARE FLUSH WITH THE SURFACE OF THE PANEL. DO NOT OVERDRIVE NAILS. STAGGER NAILS AT EACH SIDE OF JOINTS.
4. STRUCTURAL PANELS SHALL HAVE A PANEL SPAN RATING OF 32/16. OSB OR 5-PLY/5-LAYER PLYWOOD.
5. BLOCK PANEL EDGES WITH FULL STUD WIDTH BLOCKING OF THICKNESS SPECIFIED.
6. SILL PLATE NAILING IS TO PARALLEL FRAMING BELOW (WHETHER BLKG OR CONT). PROVIDE (2) ADDITIONAL NAILS OF SIZE SHOWN TO EA PERPENDICULAR FRAMING BELOW.
7. PREDRILL NAIL HOLES IF SPLITTING OCCURS. STAGGER NAILING TO PREVENT SPLITTING.
8. WHERE STRUCTURAL PANELS OCCUR AT BOTH SIDES OF WALL, STAGGER PANEL JOINTS AT EACH FACE SO THEY DO NOT FALL ON THE SAME STUD OR BLOCKING.
9. FA SPACING AT SHEAR WALLS SHALL BE 3X THE EDGE NAIL SPACING FOR ONE-SIDED SHEAR WALLS, AND 6" OC FOR WALLS WITH STRUCTURAL PANELS ON BOTH SIDES.
10. PROVIDE STRUCTURAL PANELS FULL LENGTH AND HEIGHT OF ALL EXTERIOR WALLS AND AT INTERIOR WALLS AS SHOWN ON SECTIONS AND DETAILS. MINIMUM STRUCTURAL PANEL NAILING SHALL BE TYPE (A) UNO. SEE PLANS FOR HEAVIER NAILING LOCATIONS NOTED BY WALL MARKS THUS:

MIN LENGTH OF SHEAR WALL SEGMENT (NOT ACTUAL LENGTH)
SEE SECTIONS & DETAILS FOR SIDE OF WALL REQUIRING STRUCTURAL PANELS, UNO ON SECTIONS OR DETAILS, SP SHALL BE ON THE SIDE WHERE TAG IS SHOWN
X'-X" (X) WALL LINE
WHERE EXTENT IS INDICATED, REMAINDER OF WALL LINE REQUIRES TYPE (A) UNO
IF NO EXTENT IS INDICATED THE ENTIRE WALL LINE REQUIRES THE TYPE NOTED

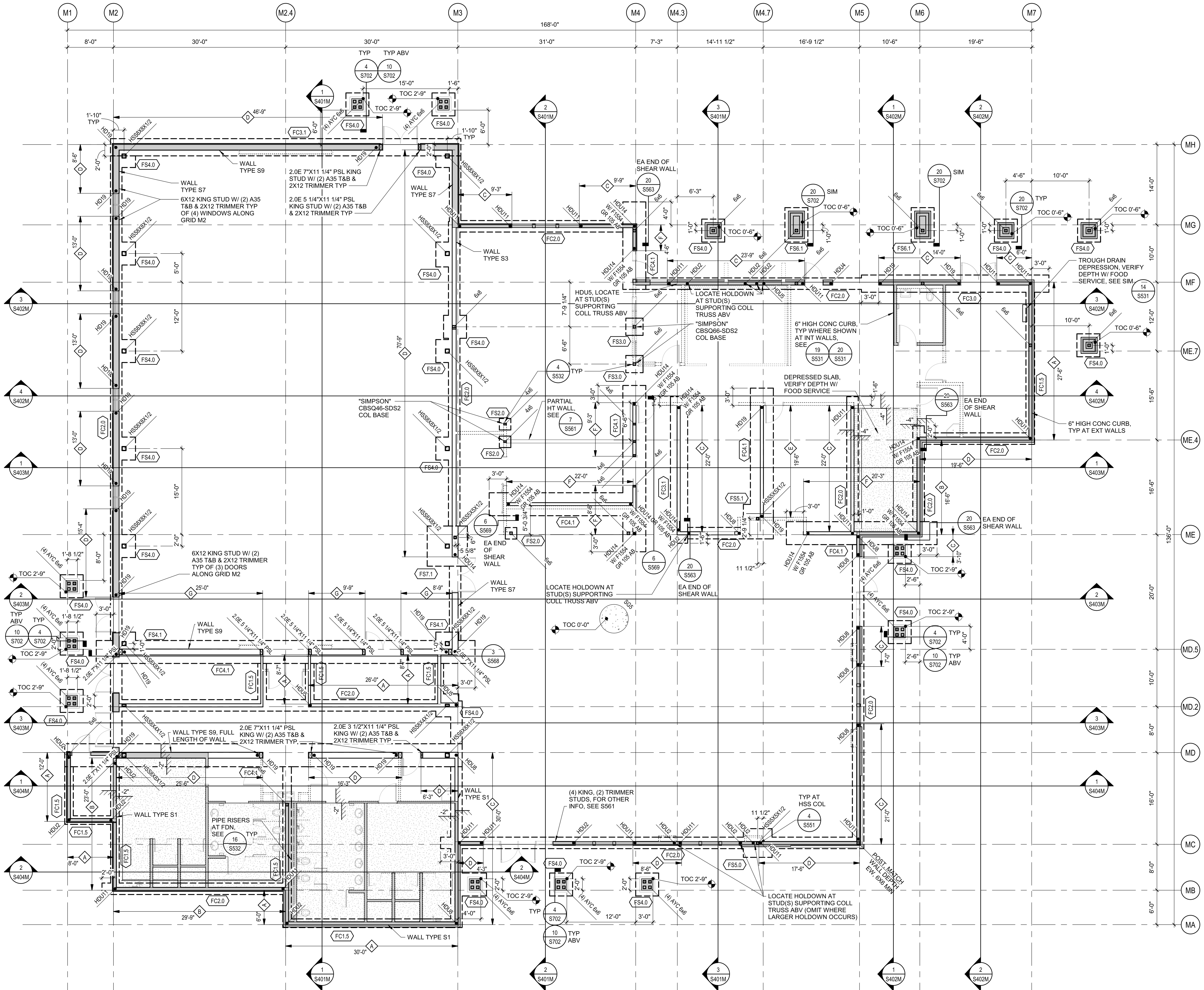

1 MULTI-PURPOSE BUILDING FLOOR PLAN
SCALE 1/8" = 1'-0"

LEGEND

170828. Q1

- (E) ELEMENTS SHOWN FADED - LINETYPE AND PATTERN/HATCHING AS NOTED FOR NEW CONSTRUCTION
- STRUCTURAL WALL, SEE 10/S561
- NON-STRUCTURAL WALL, SAD, FOR ATTACHMENT, SEE 4/S561
- CONCRETE CURB OR PAD 10/S561
- DEPRESSED SLAB AREA
- SAD FOR EXTENTS
- SLAB STEP SYMBOL (-2")
- ELEVATION RELATIVE TO TOC
- CONC SLAB / PLYWOOD / CLT DECK (SOLID LINE INDICATED SPAN OF DIRECTION OF CLT) (SX, CX, DX)
- COLUMN WITH CALLOUT (COL SIZE)
- HOLDOWN & REQUIRED POST, SEE 16/S563 (HD SIZE, POST SIZE)
- SHEAR WALL TYPE, SEE "SHEAR WALL SCHEDULE" (A)
- CONTINUOUS FOOTING TAG (FCX.X)
- SPREAD FOOTING TAG (FSX.X)
- FOOTING
- STEPPED FOOTING (S — S)

KEY PLAN

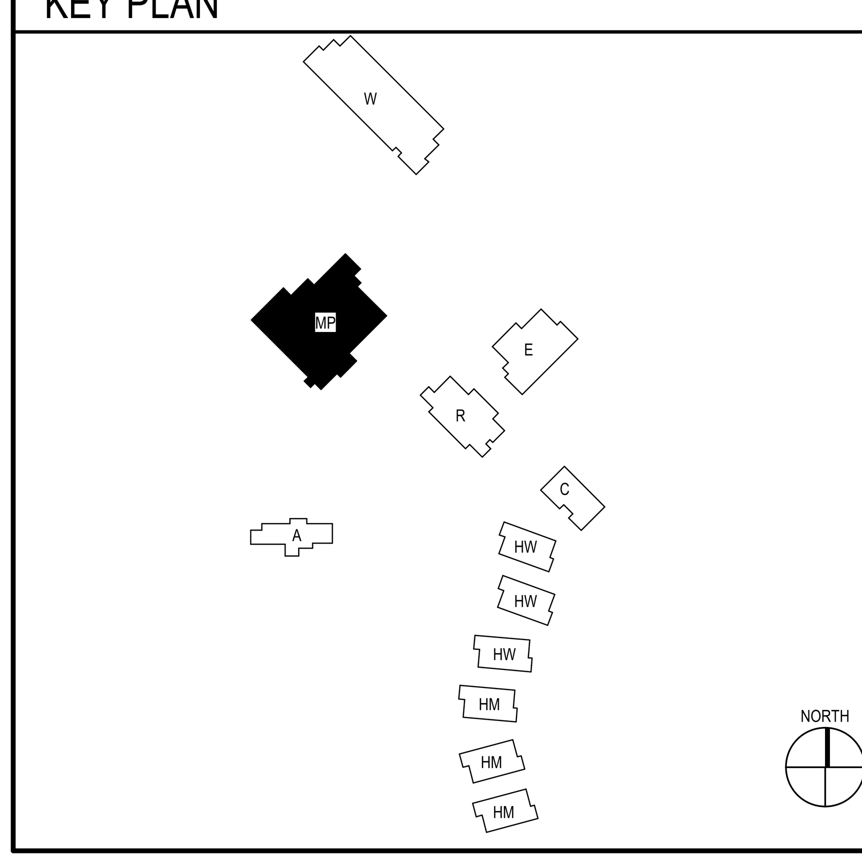

IDENTIFICATION STAMP
DIV. OF THE STATE ARCHITECT
APP: 02-118630 INC:
REVIEWED FOR
SS ☐ FLS ☐ ACS ☑
DATE: 04/13/2021

OFFICE OF THE STATE FIRE MARSHAL
APPROVED FIRE AND PANIC ONLY
Approval of this plan does not authorize or approve any omission or deviation from applicable regulations. Final approval is subject to field inspection. One set of approved plans shall be available on the project site at all times.
PERMIT NO.: 20-N-2332-CP
REVIEWED BY: LITO CATAYLO, OSFM
DATE: 4/1/2021

GENERAL SERVICES
Department of General Services
State of California
Real Estate Services Division
Project Management & Development Branch
707 Third Street, Suite 4-105
West Sacramento, California 95605

NICHOLS MELBURG & ROSSETTO
ARCHITECTS + ENGINEERS
300 Knollcrest Drive
Redding, CA. 96002
(530) 222-3300 (530) 222-3538 FAX
http://www.nmrdesign.com

Copyright © 2021
All ideas, designs, arrangements and plans indicated or represented by this drawing are owned by, and the property of, NICHOLS, MELBURG and ROSSETTO and were created, evolved and developed for use on, and in conjunction with, the specified project. None of such ideas, designs, arrangements or plans shall be used by, or disclosed to any person, firm or corporation for any purpose whatsoever without the written permission of NICHOLS, MELBURG and ROSSETTO.

LICENSE STAMPS
REGISTERED PROFESSIONAL ENGINEER DARRON E. HUNTINGDALE No. S4788 STRUCTURAL STATE OF CALIFORNIA
3/19/2021

STRUCTURAL CONSULTANT
LIONÄKIS
1919 Nineteenth Street
Sacramento CA 95811
P 916.558.1900 F 916.558.1919
www.lionakis.com

DRAWING STATUS
CONSTRUCTION DOCUMENTS

ISSUE

No.	Date	Description
1	10/22/2020	INITIAL PLAN REVIEW
2	01/08/2021	AGENCY RESUBMITTAL
3	03/22/2021	AGENCY RESUBMITTAL

If drawing is not 30" x 42" it is a reduced print

PROJECT
RESIDENTIAL CENTER, UKIAH: REPLACEMENT OF EXISTING RESIDENTIAL CENTER
440 EAST HILL ROAD
WILLITS, CALIFORNIA 95490
MENDOCINO COUNTY
CALIFORNIA CONSERVATION CORP

Supervisor	Designed	Drawn
		Author

DSA Application No.
02-118630

SHEET TITLE
MULTI-PURPOSE FOUNDATION PLAN

DGS Project Number	Lionakis Project Number
000000000001826	018322

Reference North

Sheet Scale: As indicated
Sheet Number: S201M

ISSUE DATE
July 9, 2021

Plot Date: 3/19/2021 11:20:06 AM
File Name: BIM 360://CCC Willits Residential Center/018322_S-MASTER_R18_CENTRAL.rvt

TRUSS SCHEDULE

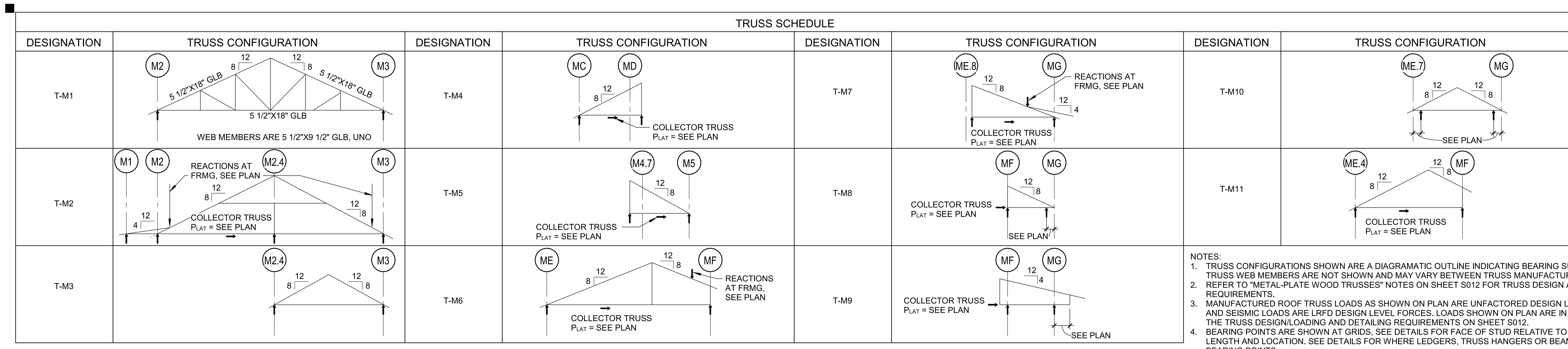

NOTES:
1. TRUSS CONFIGURATIONS SHOWN ARE A DIAGRAMATIC OUTLINE INDICATING BEARING SUPPORTS. TRUSS WEB MEMBERS ARE NOT SHOWN AND MAY VARY BETWEEN TRUSS MANUFACTURERS.
2. REFER TO "METAL-PLATE WOOD TRUSSES" NOTES ON SHEET S012 FOR TRUSS DESIGN AND DETAILING REQUIREMENTS.
3. MANUFACTURED ROOF TRUSS LOADS AS SHOWN ON PLAN ARE UNFACTORED DESIGN LOADS. WIND AND SEISMIC LOADS ARE LRFD DESIGN LEVEL FORCES. LOADS SHOWN ON PLAN ARE IN ADDITION TO THE TRUSS DESIGN/LOADING AND DETAILING REQUIREMENTS ON SHEET S012.
4. BEARING POINTS ARE SHOWN AT GRIDS, SEE DETAILS FOR FACE OF STUD RELATIVE TO BEARING LENGTH AND LOCATION. SEE DETAILS FOR WHERE LEDGERS, TRUSS HANGERS OR BEAMS ARE USED AS BEARING POINTS.
5. PROVIDE DIAPHRAGM BOUNDARY NAILING PATTERN AT COLLECTOR TRUSSES, UNO.
6. SEE SP NAILING PLAN FOR MINIMUM WIDTH OF MEMBERS REQUIRED (3X OR LARGER AT SP6 AND SP7).

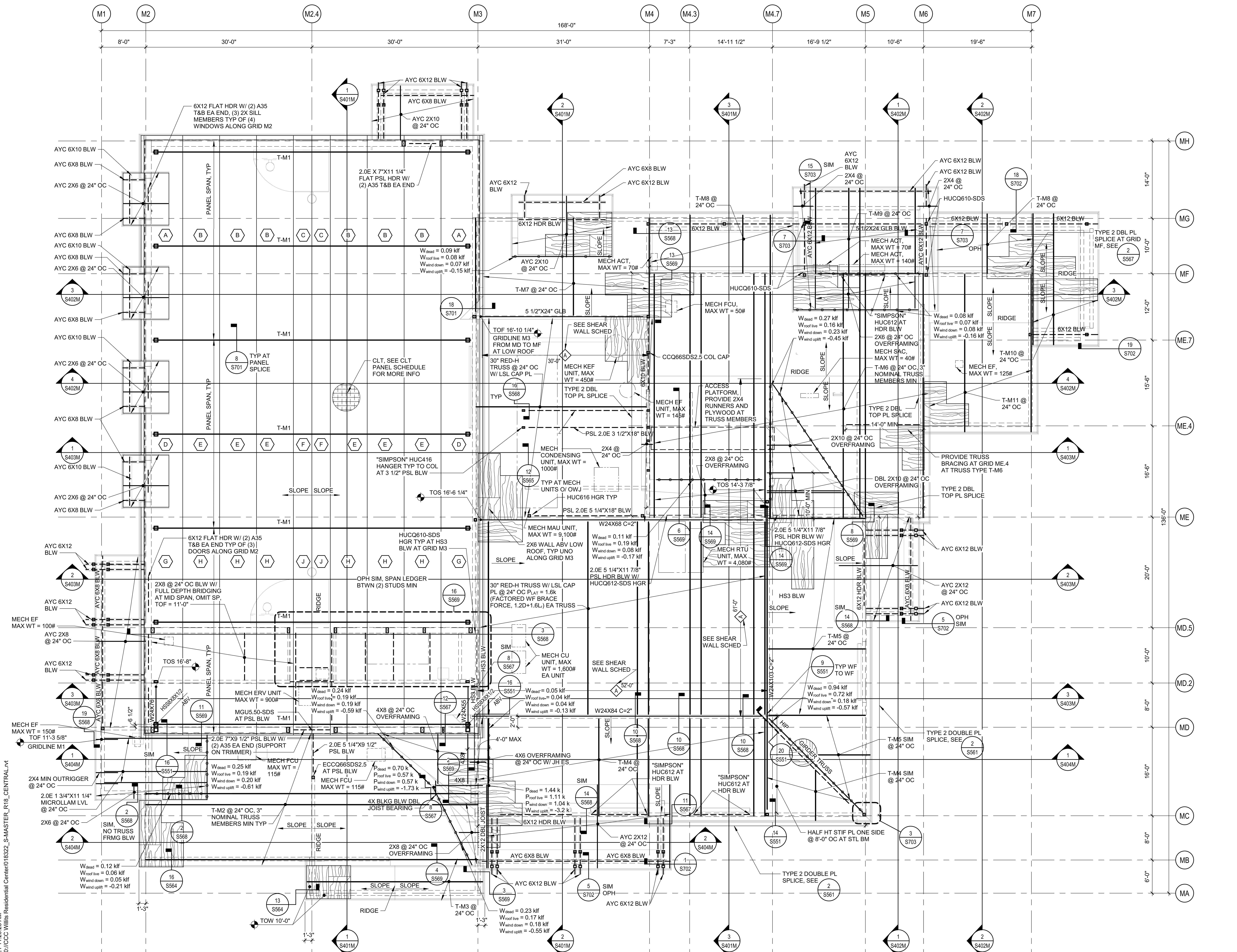

1 MULTI-PURPOSE BUILDING ROOF FRAMING PLAN

SCALE 1/8" = 1'-0"

Plot Date: 3/19/2021 11:20:23 AM
File Name: BIM 360://CCC Willits Residential Center/018322_S-MASTER_R18_CENTRAL.rvt

NOTES

S- 010000_N001A
170828. Q2

1. SEE S000 SERIES SHEETS FOR GENERAL NOTES & S500 SERIES SHEETS FOR TYPICAL DETAILS.
2. SEE S200 SERIES SHEETS FOR WALL & FRAMING ELEVATIONS.
3. DIMENSIONS ARE TO FOS OR CENTERLINE OF COLUMNS/POSTS, UNO.
4. SEE ARCH & OTHER CONSULTANT DWGS FOR DIMENSIONS & LOCATIONS OF WALL OPENINGS. SEE TYPICAL DETAILS FOR FRAMING AT OPENINGS.
5. SEE ARCH & OTHER CONSULTANT DWGS FOR ROOF PENETRATIONS NOT SHOWN. PROVIDE FRAMING AROUND OPENINGS PER TYPICAL DETAILS. SAWCUT OR CORE DRILL CLEAN HOLES WITH NO OVERCUTTING. CONFORM WITH TYPICAL DETAILS.
6. SEE ARCH DWGS FOR DIMENSIONS OF ROOF OVERHANGS, UNO.
7. EXTERIOR WALLS SHALL BE PER THE STUD WALL SCHEDULE, UNO.
8. PROVIDE STRUCTURAL PANEL EDGE NAILING TO THE FULL LENGTH OF ALL GLB's, AND MANUFACTURED TRUSSES, I-JOISTS, RIM JOISTS AND BLOCKING AT SHEAR WALLS. SEE PLANS FOR LOCATIONS WHERE DOUBLE ROWS OF EDGE NAILING OCCUR.
9. CAMBER IN GLU-LAM BEAMS SHALL BE 1600' RADIUS, TYP UNO.
10. SEE S-000 SHEETS FOR MANUFACTURED ROOF TRUSS DESIGN CRITERIA.
11. SEE 15/S61 HEADER SCHEDULE FOR ELEMENTS DESIGNATED ON PLANS AS "HS1", "HS2", OR "HS3".

STUD WALL SCHEDULE

Q1

LABEL	STUD SIZE AND SPACING	MAX STUD LENGTH
S1	2X6 @ 16" OC	16'-0"
S2	2X6 LSL @ 16" OC	20'-0"
S3	2X8 @ 16" OC	23'-0"
S4	2X8 LVL @ 16" OC	28'-0"
S5	2X10 @ 16" OC	25'-0"
S6	2X10 LVL @ 16" OC	36'-0"
S7	2X12 @ 16" OC	30'-0"
S8	2X12 LVL @ 16" OC	39'-0"
S9	4X12 PSL @ 16" OC	42'-0"

NOTES:
1. EXTENTS SHOWN ON ELEVATIONS ARE APPOXIMATIONS ONLY. STUD SIZE SHALL BE GOVERNED BY MAX HEIGHT SHOWN IN TABLE ABOVE.
2. EXTERIOR STUD WALLS SHALL BE TYPE S1, EXCEPT AS LIMITED BY STUD LENGTH OR AS IDENTIFIED ON PLANS, TYP UNO.
3. STUD SIZES BASED OFF L/120 FLEXIBLE FINISHES. STUD SIZES AT WALLS WITH VENEER, PLASTER OR BRITTLE FINISHES SHALL BE PER SEOR.

CLT PANEL SCHEDULE

Q1

TYPE	PANEL SERIES	PANEL FINISH	NAME	POSITION #	PANEL THK	CONC FILL
A	139 V	D-1	RP	1-2	5.48"	NONE
B	139 V	D-1	RP	3-8	5.48"	NONE
C	139 V	D-1	RP	9-10	5.48"	NONE
D	139 V	D-1	RP	1-2	5.48"	NONE
E	139 V	D-1	RP	3-8	5.48"	NONE
F	139 V	D-1	RP	9-10	5.48"	NONE
G	139 V	D-1	RP	1-2	5.48"	NONE
H	139 V	D-1	RP	3-8	5.48"	NONE
J	139 V	D-1	RP	9-10	5.48"	NONE

NOTES:
1. ALL PANELS ARE TO BE 7'-10 1/2" WIDE, EXCEPT PANELS C, F & J WHICH SHALL BE SIZED TO FIT.
2. RP PANEL PRIMARY SPAN IS NORTH-SOUTH, PANEL SECONDARY DIRECTION IS EAST-WEST.
3. ALL CLT PANELS SHALL BE OVER (2) SPANS MINIMUM.
4. RP PANEL POSITION NUMBERING COUNTS UPWARDS FROM LOW POINTS OF THE ROOF WITH ODD AND EVEN PANEL NUMBERS ON OPPOSITE SIDES OF RIDGE.

LEGEND

180621
Q1

- (E) ELEMENTS SHOWN FADED - LINETYPE AND PATTERN/HATCHING AS NOTED FOR NEW CONSTRUCTION
- STRUCTURAL WALL, SEE 10/S561
- NON-STRUCTURAL WALL, SAD, FOR ATTACHMENT, SEE 4/S561
- CONCRETE CURB OR PAD 10/S561
- DEPRESSED SLAB AREA
- SAD FOR EXTENTS
- SLAB STEP SYMBOL (-2")
- ELEVATION RELATIVE TO TOC
- CONC SLAB / PLYWOOD / CLT DECK (SOLID LINE INDICATED SPAN OF DIRECTION OF CLT) (SX, CX, DX)
- COLUMN WITH CALLOUT (COL SIZE)
- HOLDOWN & REQUIRED POST, SEE 16/S563 (HD SIZE, POST SIZE)
- SHEAR WALL TYPE, SEE "SHEAR WALL SCHEDULE" (A)
- BEAM SIZE (W24X55)
- BEAM CAMBER (C=2")
- BEAM SPLICE (S)
- TRUSS W/ SUPERIMPOSED LOADS

KEY PLAN

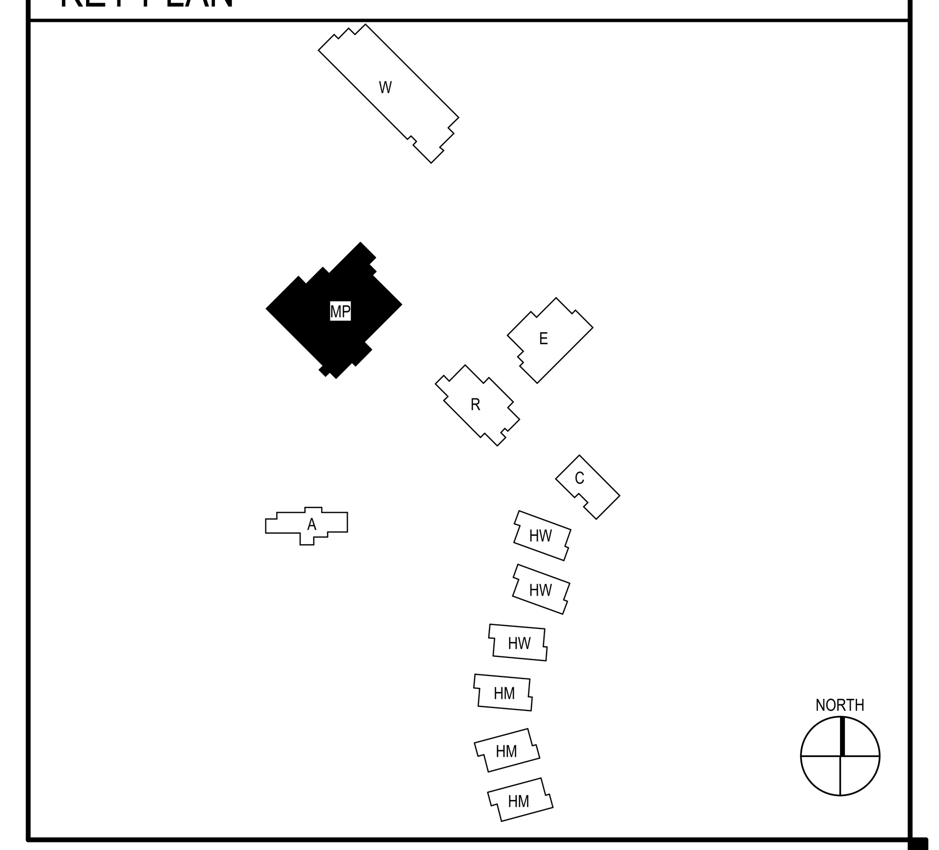

IDENTIFICATION STAMP
DIV. OF THE STATE ARCHITECT
APP: 02-118630 INC:
REVIEWED FOR
SS ☐ FLS ☐ ACS ☑
DATE: 04/13/2021

OFFICE OF THE STATE FIRE MARSHAL
APPROVED FIRE AND PANIC ONLY
Approval of this plan does not authorize or approve any omission or deviation from applicable regulations. Final approval is subject to field inspection. One set of approved plans shall be available on the project site at all times.
PERMIT NO.: 20-N-2332-CP
REVIEWED BY: LITO CATAYLO, OSFM
DATE: 4/1/2021

DGS GENERAL SERVICES
Department of General Services
State of California
Real Estate Services Division
Project Management & Development Branch
707 Third Street, Suite 4-105
West Sacramento, California 95605

NM&R
NICHOLS MELBURG & ROSSETTO
ARCHITECTS + ENGINEERS
300 Knollcrest Drive
Redding, CA. 96002
(530) 222-3300 (530) 222-3538 FAX
http://www.nmrdesign.com

Copyright © 2021
All ideas, designs, arrangements and plans indicated or represented by this drawing are owned by, and the property of, NICHOLS, MELBURG and ROSSETTO and were created, evolved and developed for use on, and in conjunction with, the specified project. None of such ideas, designs, arrangements or plans shall be used by, or disclosed to any person, firm or corporation for any purpose whatsoever without the written permission of NICHOLS, MELBURG and ROSSETTO.

LICENSE STAMPS
REGISTERED PROFESSIONAL ENGINEER DARRON E. HUNTINGDALE No. S4788 STRUCTURAL STATE OF CALIFORNIA
3/19/2021

STRUCTURAL CONSULTANT
LIONÄKIS
1919 Nineteenth Street
Sacramento CA 95811
P 916.558.1900 F 916.558.1919
www.lionakis.com

DRAWING STATUS
CONSTRUCTION DOCUMENTS

ISSUE

No.	Date	Description
1	10/22/2020	INITIAL PLAN REVIEW
2	01/08/2021	AGENCY RESUBMITTAL
3	03/22/2021	AGENCY RESUBMITTAL

If drawing is not 30" x 42" it is a reduced print

PROJECT
RESIDENTIAL CENTER, UKIAH: REPLACEMENT OF EXISTING RESIDENTIAL CENTER
440 EAST HILL ROAD
WILLITS, CALIFORNIA 95490
MENDOCINO COUNTY
CALIFORNIA CONSERVATION CORP

Supervisor	Designed	Drawn
		Author

DSA Application No.
02-118630

SHEET TITLE
MULTI-PURPOSE ROOF FRAMING PLAN

DGS Project Number	Lionakis Project Number
000000000001826	018322

Reference North | Sheet Scale: As indicated
Sheet Number: S202M

ISSUE DATE
July 9, 2021

TRUSS SCHEDULE

DESIGNATION	TRUSS CONFIGURATION	DESIGNATION	TRUSS CONFIGURATION	DESIGNATION	TRUSS CONFIGURATION	DESIGNATION	TRUSS CONFIGURATION
T-M1	M2, M3; 12/8, 12/8; 5 1/2"X18" GLB; 5 1/2"X18" GLB; 5 1/2"X18" GLB; WEB MEMBERS ARE 5 1/2"X9 1/2" GLB, UNO	T-M4	MC, MD; 12/8; COLLECTOR TRUSS P_{LAT} = SEE PLAN	T-M7	ME.8, MG; 12/8; 12/4; REACTIONS AT FRMG, SEE PLAN; COLLECTOR TRUSS P_{LAT} = SEE PLAN	T-M10	ME.7, MG; 12/8, 12/8; SEE PLAN
T-M2	M1, M2, M2.4, M3; 12/4; 12/8; 12/8; REACTIONS AT FRMG, SEE PLAN; COLLECTOR TRUSS P_{LAT} = SEE PLAN	T-M5	M4.7, M5; 12/8; COLLECTOR TRUSS P_{LAT} = SEE PLAN	T-M8	MF, MG; 12/8; COLLECTOR TRUSS P_{LAT} = SEE PLAN; SEE PLAN	T-M11	ME.4, MF; 12/8; 12/8; COLLECTOR TRUSS P_{LAT} = SEE PLAN
T-M3	M2.4, M3; 12/8, 12/8	T-M6	ME, MF; 12/8; 12/8; REACTIONS AT FRMG, SEE PLAN; COLLECTOR TRUSS P_{LAT} = SEE PLAN	T-M9	MF, MG; 12/4; COLLECTOR TRUSS P_{LAT} = SEE PLAN; SEE PLAN		

NOTES:
1. TRUSS CONFIGURATIONS SHOWN ARE A DIAGRAMATIC OUTLINE INDICATING BEARING SUPPORTS. TRUSS WEB MEMBERS ARE NOT SHOWN AND MAY VARY BETWEEN TRUSS MANUFACTURERS.
2. REFER TO "METAL-PLATE WOOD TRUSSES" NOTES ON SHEET S012 FOR TRUSS DESIGN AND DETAILING REQUIREMENTS.
3. MANUFACTURED ROOF TRUSS LOADS AS SHOWN ON PLAN ARE UNFACTORED DESIGN LOADS. WIND AND SEISMIC LOADS ARE LRFD DESIGN LEVEL FORCES. LOADS SHOWN ON PLAN ARE IN ADDITION TO THE TRUSS DESIGN/LOADING AND DETAILING REQUIREMENTS ON SHEET S012.
4. BEARING POINTS ARE SHOWN AT GRIDS, SEE DETAILS FOR FACE OF STUD RELATIVE TO BEARING LENGTH AND LOCATION. SEE DETAILS FOR WHERE LEDGERS, TRUSS HANGERS OR BEAMS ARE USED AS BEARING POINTS.
5. PROVIDE DIAPHRAGM BOUNDARY NAILING PATTERN AT COLLECTOR TRUSSES, UNO.
6. SEE SP NAILING PLAN FOR MINIMUM WIDTH OF MEMBERS REQUIRED (3X OR LARGER AT SP6 AND SP7).

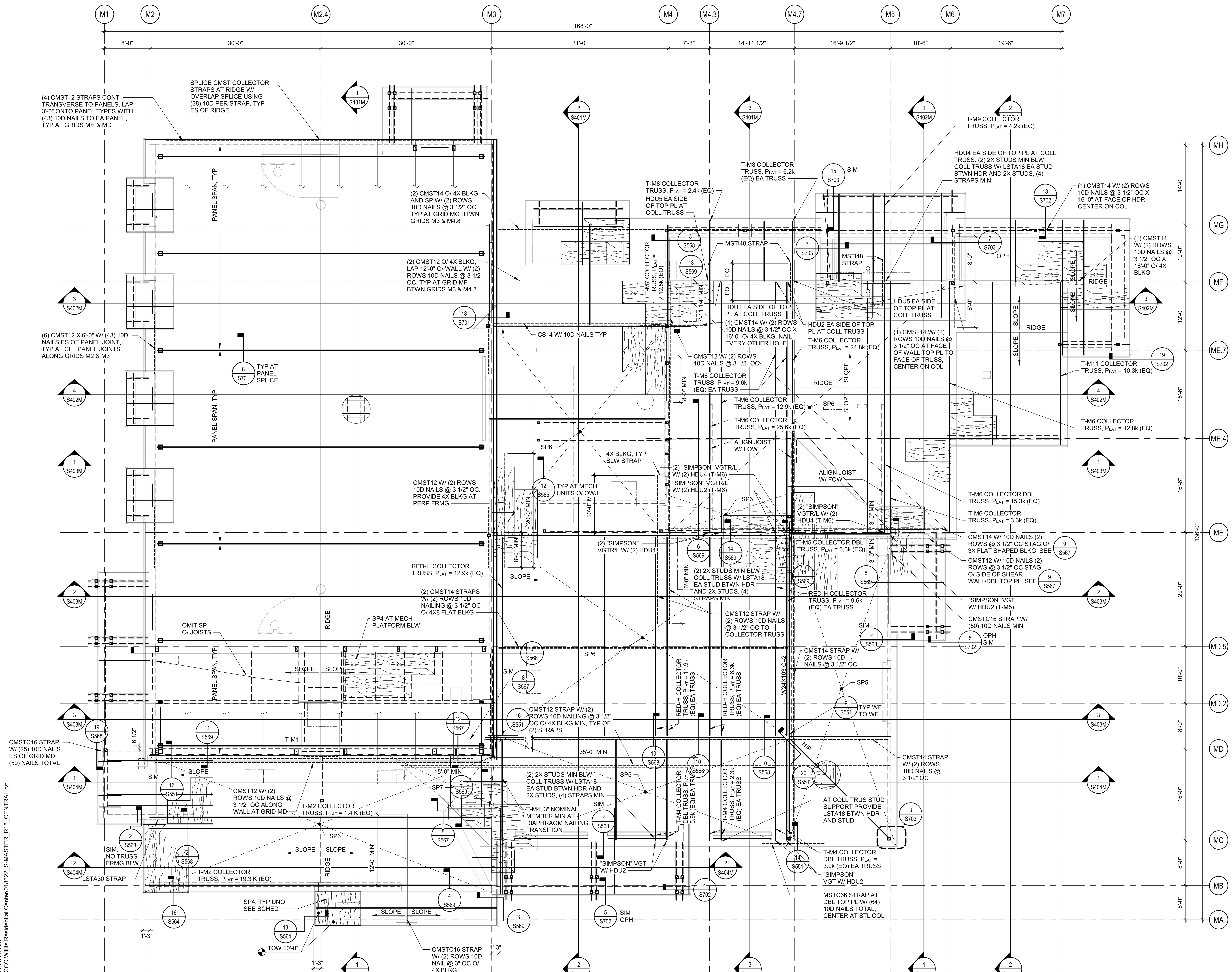

Plot Date: 3/19/2021 11:20:28 AM
File Name: BIM 360://CCC Willits Residential Center/018322_S-MASTER_R18_CENTRAL.rvt

SP NAILING SCHEDULE

S- 061100_N001A
170126. Q2

WOOD STRUCTURAL PANEL NAILING SCHEDULE (UNO)

- PROVIDE 1/8" SPACE BETWEEN SHEETS FOR ALL SP SHEATHING.
- MIN SHEET WIDTH SHALL BE 24" FOR ROOF & FLOOR, 12" FOR WALLS.

SP4 - 19/32" STRUCT I SP, APA SPAN RATED 40/20
ARRANGE SHEETS AS SHOWN ON ROOF FRAMING PLAN

EN AT PERIMETER OF EA SHEET	10D @ 6" OC
FN AT INTERIOR CONTACTS OF EA SHEET	10D @ 12" OC
BN AT PERIMETER OF ROOF	10D @ 6" OC

SIDE JOINTS TO BE BLOCKED W/ 2X3 FLAT NAILED W/ (2) 8d EA END TO JOIST OR RAFTER.

SP5 - 19/32" STRUCT I SP, APA SPAN RATED 40/20
ARRANGE SHEETS AS SHOWN ON ROOF FRAMING PLAN

EN AT PERIMETER OF EA SHEET	10D @ 4" OC
FN AT INTERIOR CONTACTS OF EA SHEET	10D @ 12" OC
BN AT PERIMETER OF ROOF	10D @ 4" OC

SIDE JOINTS TO BE BLOCKED W/ 2X3 FLAT NAILED W/ (2) 8d EA END TO JOIST OR RAFTER.

SP6 - 19/32" STRUCT I SP, APA SPAN RATED 40/20
ARRANGE SHEETS AS SHOWN ON ROOF FRAMING PLAN

EN AT PERIMETER OF EA SHEET	10D @ 2 1/2" OC
FN AT INTERIOR CONTACTS OF EA SHEET	10D @ 12" OC
BN AT PERIMETER OF ROOF	10D @ 2 1/2" OC

SIDE JOINTS TO BE BLOCKED W/ 2X3 FLAT NAILED W/ (2) 8d EA END TO JOIST OR RAFTER. FRAMING MEMBERS SHALL BE 3" NOMINAL OR GREATER.

SP7 (HIGH LOAD DIAPHRAGM) - 19/32" STRUCT I SP, APA SPAN RATED 40/20
ARRANGE SHEETS AS SHOWN ON ROOF FRAMING PLAN

EN AT PERIMETER OF EA SHEET	(2) LINES OF FASTENERS 10D @ 2 1/2" OC
FN AT INTERIOR CONTACTS OF EA SHEET	(2) LINES OF FASTENERS 10D @ 12" OC
BN AT PERIMETER OF ROOF	(2) LINES OF FASTENERS 10D @ 2 1/2" OC

SIDE JOINTS TO BE BLOCKED W/ 3X4 FLAT NAILED W/ (2) 8d EA END TO JOIST OR RAFTER. FRAMING MEMBERS SHALL BE 3" NOMINAL OR GREATER. FOR ADDITIONAL INFO AT PANEL JOINTS, SEE 9/S563

*PROVIDE DIAPRAGM BOUNDARY NAILING PATTERN AT COLLECTOR TRUSSES, UNO

STUD WALL SCHEDULE

Q1

LABEL	STUD SIZE AND SPACING	MAX STUD LENGTH
S1	2X6 @ 16" OC	16'-0"
S2	2X6 LSL @ 16" OC	20'-0"
S3	2X8 @ 16" OC	23'-0"
S4	2X8 LVL @ 16" OC	28'-0"
S5	2X10 @ 16" OC	25'-0"
S6	2X10 LVL @ 16" OC	36'-0"
S7	2X12 @ 16" OC	30'-0"
S8	2X12 LVL @ 16" OC	39'-0"
S9	4X12 PSL @ 16" OC	42'-0"

NOTES:
1. EXTENTS SHOWN ON ELEVATIONS ARE APPOXIMATIONS ONLY. STUD SIZE SHALL BE GOVERNED BY MAX HEIGHT SHOWN IN TABLE ABOVE.
2. EXTERIOR STUD WALLS SHALL BE TYPE S1, EXCEPT AS LIMITED BY STUD LENGTH OR AS IDENTIFIED ON PLANS, TYP UNO.
3. STUD SIZES BASED OFF L/120 FLEXIBLE FINISHES. STUD SIZES AT WALLS WITH VENEER, PLASTER OR BRITTLE FINISHES SHALL BE PER SEOR.

LEGEND

180621
Q1

(E) ELEMENTS SHOWN FADED - LINETYPE AND PATTERN/HATCHING AS NOTED FOR NEW CONSTRUCTION
STRUCTURAL WALL, SEE 10/S561
NON-STRUCTURAL WALL, SAD, FOR ATTACHMENT, SEE 4/S561
CONCRETE CURB OR PAD 10/S561
DEPRESSED SLAB AREA
SAD FOR EXTENTS
SLAB STEP SYMBOL (-2")
ELEVATION RELATIVE TO TOC
CONC SLAB / PLYWOOD / CLT DECK (SOLID LINE INDICATED SPAN OF DIRECTION OF CLT) (SX, CX, DX)
COLUMN WITH CALLOUT (COL SIZE)
HOLDOWN & REQUIRED POST, SEE 16/S563 (HD SIZE, POST SIZE)
SHEAR WALL TYPE, SEE "SHEAR WALL SCHEDULE" (A)
BEAM SIZE (W24X55)
BEAM CAMBER (C=2")
BEAM SPLICE (S)
TRUSS W/ SUPERIMPOSED LOADS

KEY PLAN

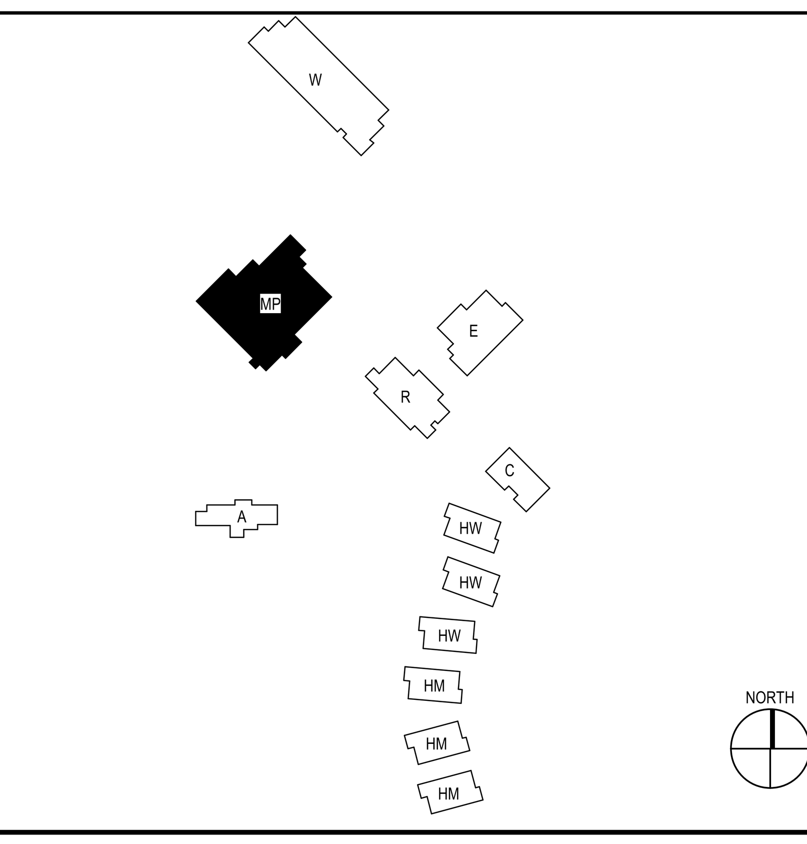

IDENTIFICATION STAMP
DIV. OF THE STATE ARCHITECT
APP: 02-118630 INC:
REVIEWED FOR
SS ☐ FLS ☐ ACS ☑
DATE: 04/13/2021

OFFICE OF THE STATE FIRE MARSHAL
APPROVED FIRE AND PANIC ONLY
Approval of this plan does not authorize or approve any omission or deviation from applicable regulations. Final approval is subject to field inspection. One set of approved plans shall be available on the project site at all times.
PERMIT NO.: 20-N-2332-CP
REVIEWED BY: LITO CATAYLO, OSFM
DATE: 4/1/2021

DGS
GENERAL SERVICES
Department of General Services
State of California
Real Estate Services Division
Project Management & Development Branch
707 Third Street, Suite 4-105
West Sacramento, California 95605

NM&R
NICHOLS MELBURG & ROSSETTO
ARCHITECTS + ENGINEERS
300 Knollcrest Drive
Redding, CA. 96002
(530) 222-3300 (530) 222-3538 FAX
http://www.nmrdesign.com

Copyright © 2021
All ideas, designs, arrangements and plans indicated or represented by this drawing are owned by, and the property of, NICHOLS, MELBURG and ROSSETTO and were created, evolved and developed for use on, and in conjunction with, the specified project. None of such ideas, designs, arrangements or plans shall be used by, or disclosed to any person, firm or corporation for any purpose whatsoever without the written permission of NICHOLS, MELBURG and ROSSETTO.

LICENSE STAMPS
REGISTERED PROFESSIONAL ENGINEER DARRON E. HUNTINGDALE No. S4788 STRUCTURAL STATE OF CALIFORNIA
3/19/2021

STRUCTURAL CONSULTANT
LIONÄKIS
1919 Nineteenth Street
Sacramento CA 95811
P 916.558.1900 F 916.558.1919
www.lionakis.com

DRAWING STATUS
CONSTRUCTION DOCUMENTS

ISSUE

No.	Date	Description
1	10/22/2020	INITIAL PLAN REVIEW
2	01/08/2021	AGENCY RESUBMITTAL
3	03/22/2021	AGENCY RESUBMITTAL

If drawing is not 30" x 42" it is a reduced print

PROJECT
RESIDENTIAL CENTER, UKIAH: REPLACEMENT OF EXISTING RESIDENTIAL CENTER
440 EAST HILL ROAD
WILLITS, CALIFORNIA 95490
MENDOCINO COUNTY
CALIFORNIA CONSERVATION CORP

Supervisor	Designed	Drawn
		Author

DSA Application No.
02-118630

SHEET TITLE
MULTI-PURPOSE ROOF COLLECTOR/STRAP/SP NAILING PLAN

DGS Project Number	Lionakis Project Number
000000000001826	018322

Reference North: NORTH
Sheet Scale: As indicated
Sheet Number: S203M

ISSUE DATE
July 9, 2021

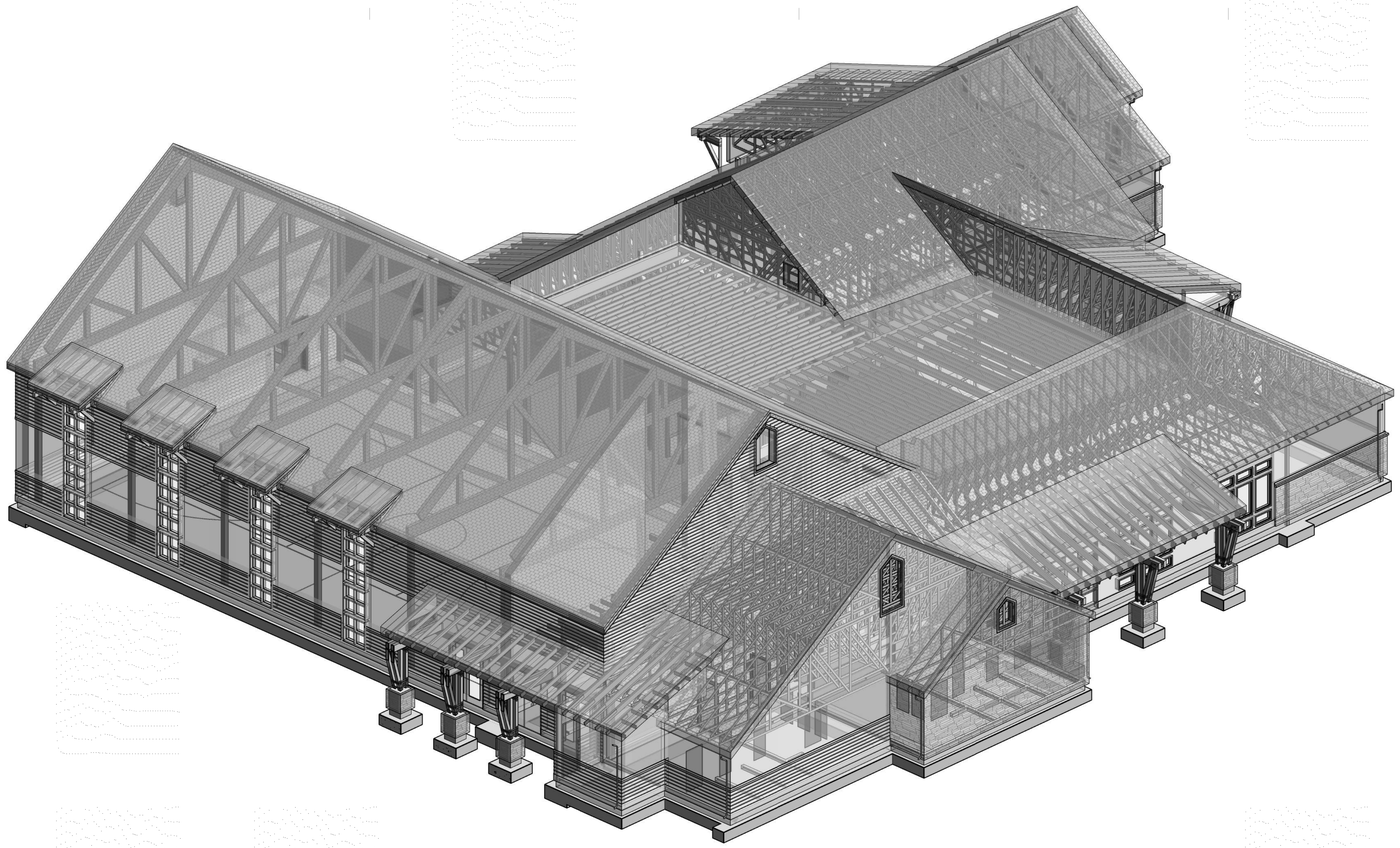

1 BUILDING M - VIEW 1
SCALE

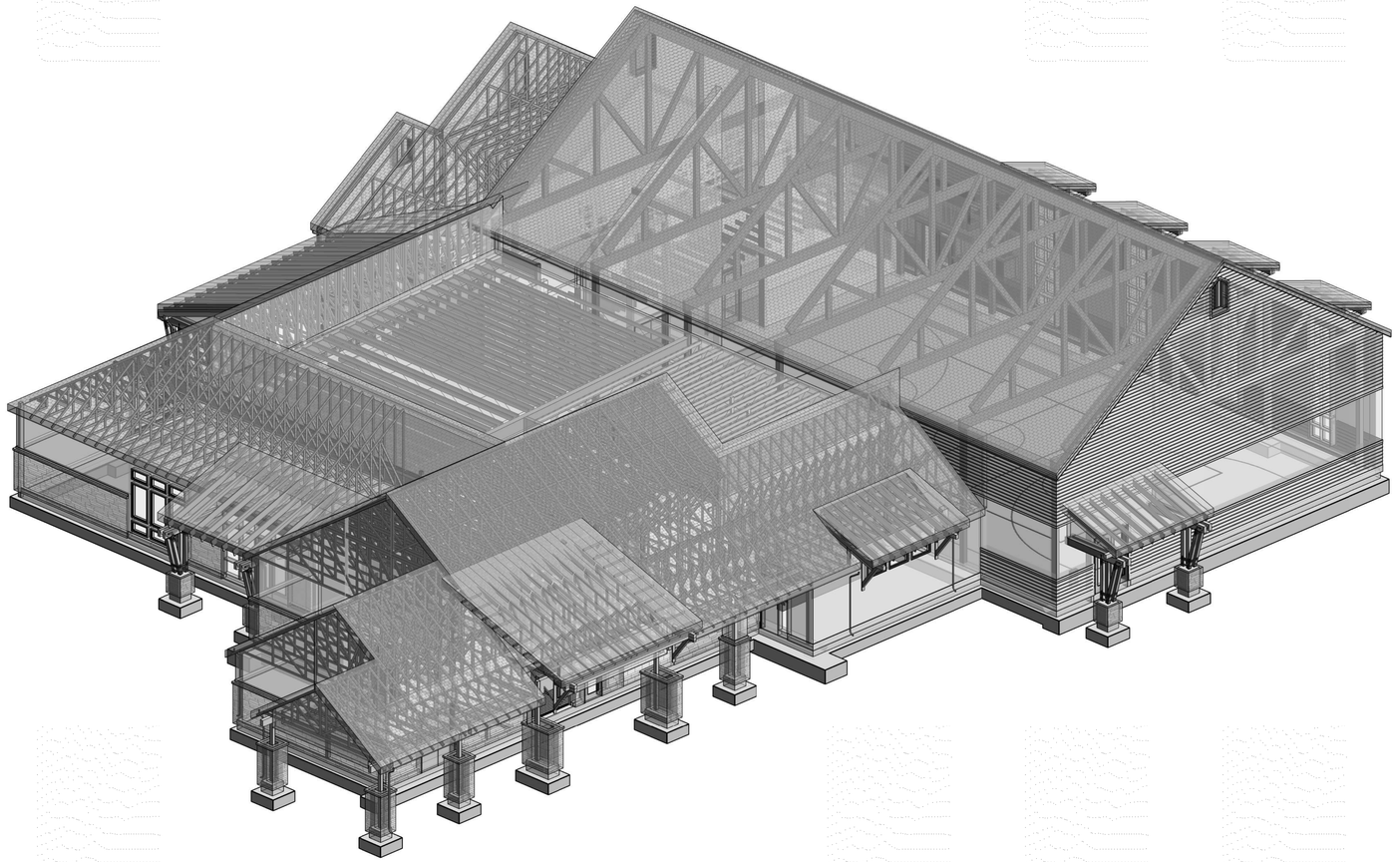

2 BUILDING M - VIEW 2
SCALE

3D VIEW NOTES

170828. Q1

1. FRAMING SHOWN IN THESE VIEWS IS FOR GENERAL INFORMATION ONLY. THE BALANCE OF STRUCTURAL DOCUMENT TAKE PRECEDENCE OVER 3D VIEWS.
2. NOT ALL FRAMING MAY BE SHOWN. SEE CONSTRUCTION DOCUMENTS FOR ADDITIONAL FRAMING MEMBERS REQUIRED.

KEY PLAN

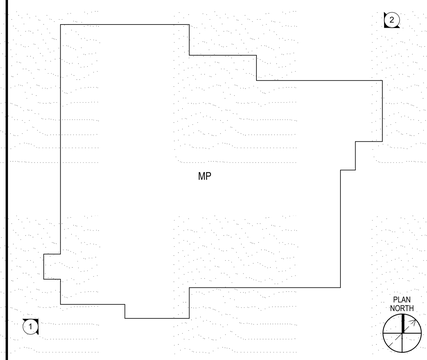

IDENTIFICATION STAMP
DIV. OF THE STATE ARCHITECT
APP: 02-118630 INC:
REVIEWED FOR
SS ☐ FLS ☐ ACS ☑
DATE: 04/13/2021

OFFICE OF THE STATE FIRE MARSHAL
APPROVED FIRE AND PANIC ONLY
Approval of this plan does not authorize or approve any omission or deviation from applicable regulations. Final approval is subject to field inspection. One set of approved plans shall be available on the project site at all times.
PERMIT NO. 20-N-2332-CP
REVIEWED BY: LEO CATAYLO, OSFM
DATE: 4 / /2021

DGS GENERAL SERVICES
Department of General Services
State of California
Real Estate Services Division
Project Management & Development Branch
707 Third Street, Suite 4-105
West Sacramento, California 95605

NICHOLS MELBURG & ROSSETTO
ARCHITECTS + ENGINEERS
300 Knollcrest Drive
Redding, CA. 96002
(530) 222-3300 (530) 222-3538 FAX
http://www.nmrdesign.com

Copyright © 2021
All ideas, designs, arrangements and plans indicated or represented by this drawing are owned by, and the property of, NICHOLS, MELBURG and ROSSETTO and were created, evolved and developed for use on, and in conjunction with, the specified project. None of such ideas, designs, arrangements or plans shall be used by, or disclosed to any person, firm or corporation for any purpose whatsoever without the written permission of NICHOLS, MELBURG and ROSSETTO.

LICENSE STAMPS

REGISTERED PROFESSIONAL ENGINEER
GORDON E. HUNTINGFORD
No. S-4789
STRUCTURAL
STATE OF CALIFORNIA
3/19/2021

STRUCTURAL CONSULTANT

LIONAKIS
1919 Nineteenth Street
Sacramento CA 95811
P 916.558.1900 F 916.558.1919
www.lionakis.com

DRAWING STATUS
CONSTRUCTION DOCUMENTS

ISSUE

No.	Date	Description
1	10/22/2020	INITIAL PLAN REVIEW
2	01/08/2021	AGENCY RESUBMITTAL
3	03/22/2021	AGENCY RESUBMITTAL

If drawing is not 30" x 42" it is a reduced print

PROJECT
RESIDENTIAL CENTER, UKIAH: REPLACEMENT OF EXISTING RESIDENTIAL CENTER
440 EAST HILL ROAD
WILLITS, CALIFORNIA 95490
MENDOCINO COUNTY
CALIFORNIA CONSERVATION CORP

Supervisor	Designed	Drawn
		Author

DSA Application No.
02-118630

SHEET TITLE
MULTI-PURPOSE 3D VIEWS

DGS Project Number	Lionakis Project Number
000000000001826	018322

Reference North
Sheet Scale 12" = 1'-0"
Sheet Number S211M

ISSUE DATE
July 9, 2021

Plot Date: 3/19/2021 11:22:17 AM
File Name: BIM 360://CCC Willits Residential Center/018322_S-MASTER_R18_CENTRAL.rvt

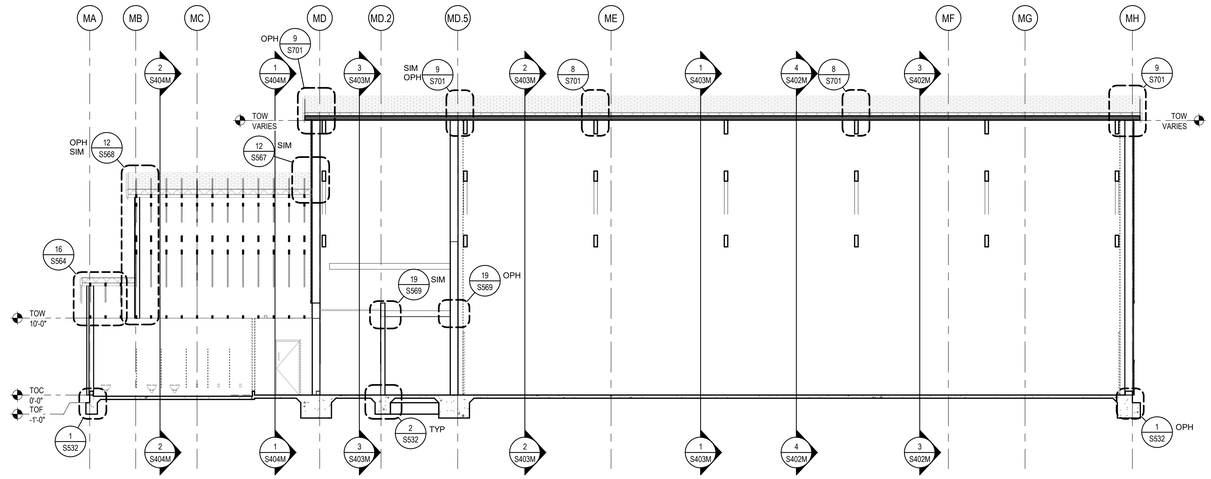

1 BLDG M - BUILDING SECTION

SCALE 1/8" = 1'-0"

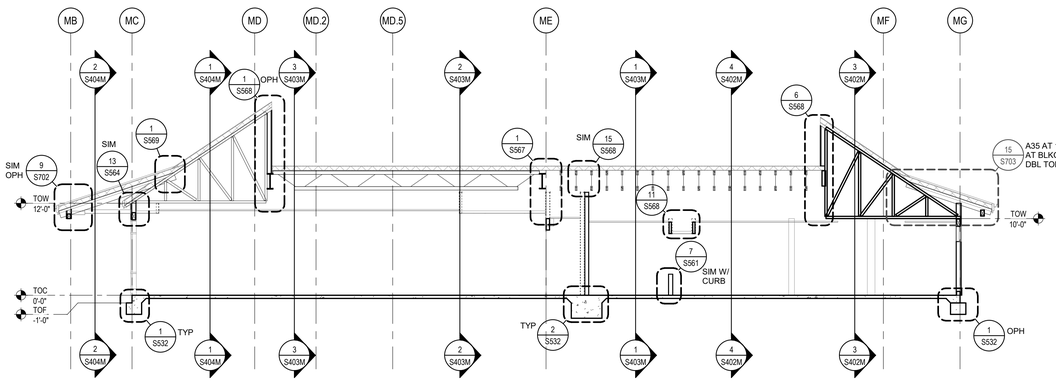

2 BLDG M - BUILDING SECTION

SCALE 1/8" = 1'-0"

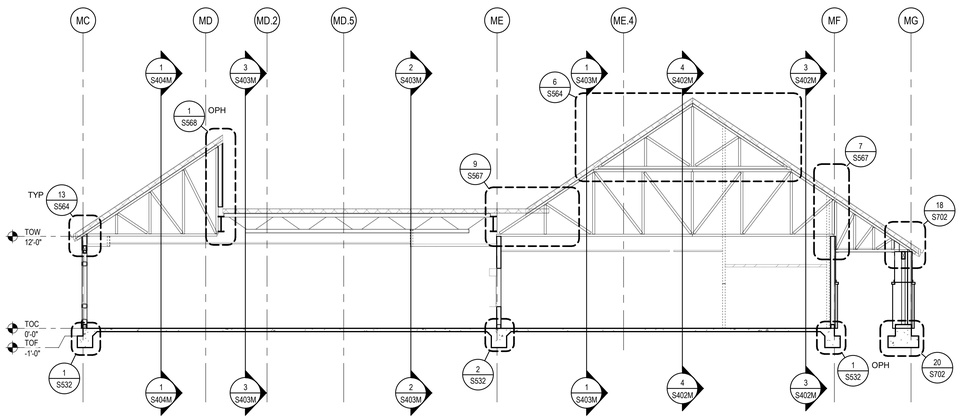

3 BLDG M - BUILDING SECTION

SCALE 1/8" = 1'-0"

KEY PLAN

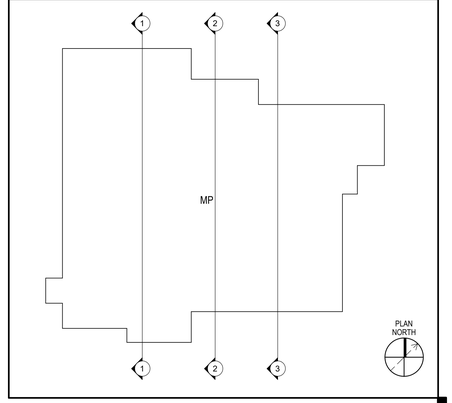

IDENTIFICATION STAMP
DIV. OF THE STATE ARCHITECT
APP: 02-118630 INC:
REVIEWED FOR
SS ☐ FLS ☐ ACS ☑
DATE: 04/13/2021

OFFICE OF THE STATE FIRE MARSHAL
APPROVED FIRE AND PANIC ONLY
Approval of this plan does not authorize or approve any omission or deviation from applicable regulations. Final approval is subject to field inspection. One set of approved plans shall be available on the project site at all times.
PERMIT NO. 20-N-2332-CP
REVIEWED BY: LEO CATAYLO, OSFM
DATE: 4 / /2021

GENERAL SERVICES
Department of General Services
State of California
Real Estate Services Division
Project Management & Development Branch
707 Third Street, Suite 4-105
West Sacramento, California 95605

NICHOLS MELBURG & ROSSETTO
ARCHITECTS + ENGINEERS
300 Knollcrest Drive
Redding, CA 96002
(530) 222-3300 (530) 222-3538 FAX
http://www.nmrdesign.com

Copyright © 2021
All ideas, designs, arrangements and plans indicated or represented by this drawing are owned by, and the property of, NICHOLS, MELBURG and ROSSETTO and were created, evolved and developed for use on, and in conjunction with, the specified project. None of such ideas, designs, arrangements or plans shall be used by, or disclosed to any person, firm or corporation for any purpose whatsoever without the written permission of NICHOLS, MELBURG and ROSSETTO.

LICENSE STAMPS

REGISTERED PROFESSIONAL ENGINEER
ROBERT E. HUNTINGTON
No. S4788
STRUCTURAL
STATE OF CALIFORNIA
3/19/2021

STRUCTURAL CONSULTANT

LIONAKIS
1919 Nineteenth Street
Sacramento CA 95811
P 916.558.1900 F 916.558.1919
www.lionakis.com

DRAWING STATUS
CONSTRUCTION DOCUMENTS

ISSUE

No.	Date	Description
1	10/22/2020	INITIAL PLAN REVIEW
2	01/08/2021	AGENCY RESUBMITTAL
3	03/22/2021	AGENCY RESUBMITTAL

If drawing is not 30" x 42" it is a reduced print

PROJECT
RESIDENTIAL CENTER, UKIAH: REPLACEMENT OF EXISTING RESIDENTIAL CENTER
440 EAST HILL ROAD
WILLITS, CALIFORNIA 95490
MENDOCINO COUNTY
CALIFORNIA CONSERVATION CORP

Supervisor	Designed	Drawn
		Author

DSA Application No.
02-118630

SHEET TITLE
MULTI-PURPOSE STRUCTURAL BUILDING SECTIONS

DGS Project Number	Lionakis Project Number
00000000001826	018322

Reference North
Sheet Scale 1/8" = 1'-0"
Sheet Number S401M

ISSUE DATE
July 9, 2021

Plot Date: 3/19/2021 11:23:36 AM
File Name: BIM 360://CCC Willits Residential Center/018322_S-MASTER_R18_CENTRAL.rvt

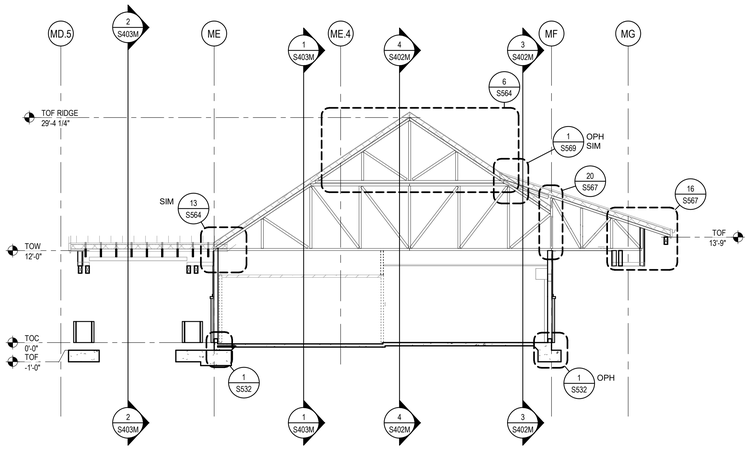

1 BLDG M - BUILDING SECTION

SCALE 1/8" = 1'-0"

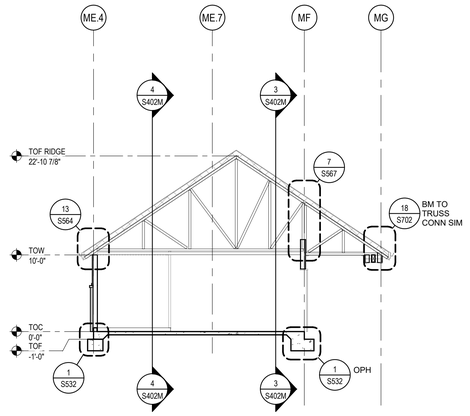

2 BLDG M - BUILDING SECTION

SCALE 1/8" = 1'-0"

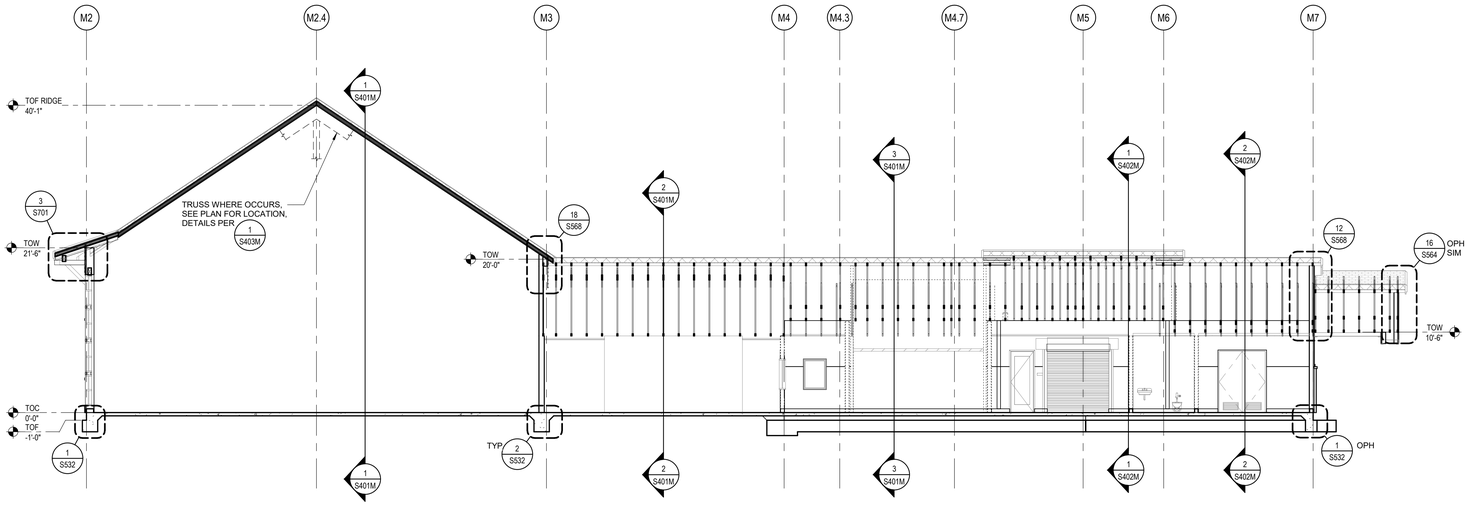

3 BLDG M - BUILDING SECTION

SCALE 1/8" = 1'-0"

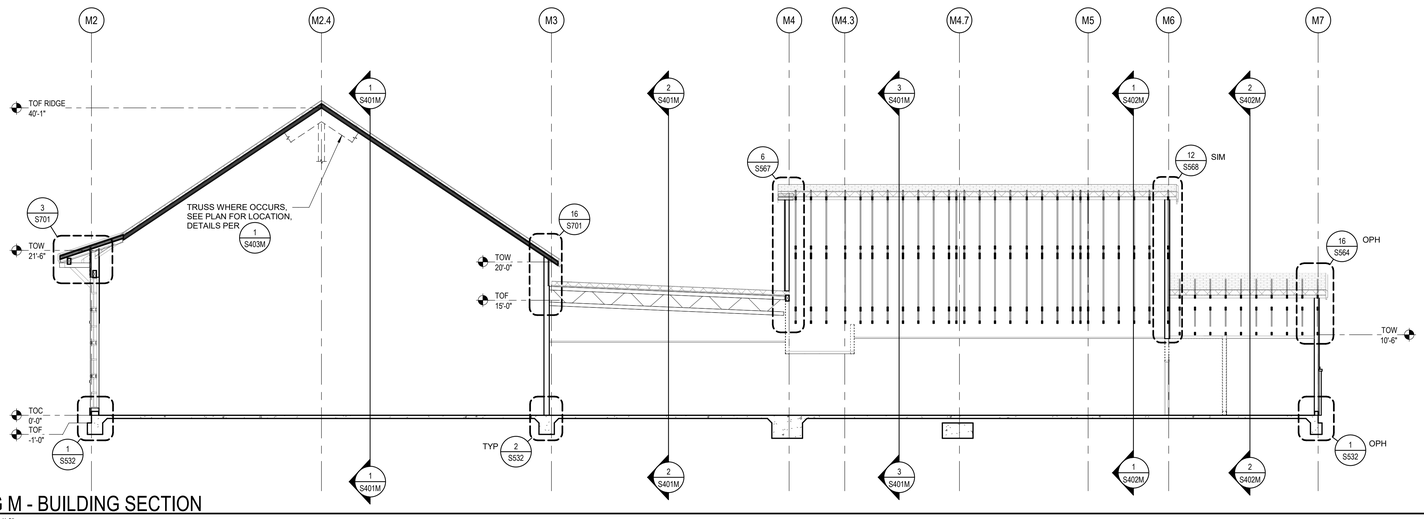

4 BLDG M - BUILDING SECTION

SCALE 1/8" = 1'-0"

KEY PLAN

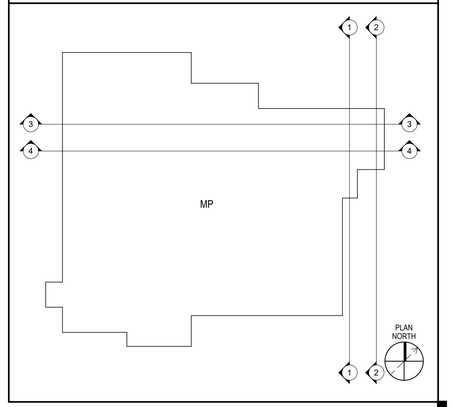

IDENTIFICATION STAMP
DIV. OF THE STATE ARCHITECT
APP: 02-118630 INC:
REVIEWED FOR
SS ☐ FLS ☐ ACS ☑
DATE: 04/13/2021

OFFICE OF THE STATE FIRE MARSHAL
APPROVED FIRE AND PANIC ONLY
Approval of this plan does not authorize or approve any omission or deviation from applicable regulations. Final approval is subject to field inspection. One set of approved plans shall be available on the project site at all times.
PERMIT NO. 20-N-2332-CP
REVIEWED BY: LEO CATAYLO, OSFM
DATE: 4 / /2021

DGS GENERAL SERVICES
Department of General Services
State of California
Real Estate Services Division
Project Management & Development Branch
707 Third Street, Suite 4-105
West Sacramento, California 95605

NICHOLS MELBURG & ROSSETTO
ARCHITECTS + ENGINEERS
300 Knollcrest Drive
Redding, CA. 96002
(530) 222-3300 (530) 222-3538 FAX
http://www.nmrdesign.com

Copyright © 2021
All ideas, designs, arrangements and plans indicated or represented by this drawing are owned by, and the property of, NICHOLS, MELBURG and ROSSETTO and were created, evolved and developed for use on, and in conjunction with, the specified project. None of such ideas, designs, arrangements or plans shall be used by, or disclosed to any person, firm or corporation for any purpose whatsoever without the written permission of NICHOLS, MELBURG and ROSSETTO.

LICENSE STAMPS

REGISTERED PROFESSIONAL ENGINEER
SANDRA E. HUNTINGTON
No. S4709
STRUCTURAL
STATE OF CALIFORNIA
3/19/2021

STRUCTURAL CONSULTANT

LIONAKIS
1919 Nineteenth Street
Sacramento CA 95811
P 916.558.1900 F 916.558.1919
www.lionakis.com

DRAWING STATUS
CONSTRUCTION DOCUMENTS

ISSUE

No.	Date	Description
1	10/22/2020	INITIAL PLAN REVIEW
2	01/08/2021	AGENCY RESUBMITTAL
3	03/22/2021	AGENCY RESUBMITTAL

If drawing is not 30" x 42" it is a reduced print

PROJECT
RESIDENTIAL CENTER, UKIAH: REPLACEMENT OF EXISTING RESIDENTIAL CENTER
440 EAST HILL ROAD
WILLITS, CALIFORNIA 95490
MENDOCINO COUNTY
CALIFORNIA CONSERVATION CORP

Supervisor	Designed	Drawn
		Author

DSA Application No.
02-118630

SHEET TITLE
MULTI-PURPOSE STRUCTURAL BUILDING SECTIONS

DGS Project Number	Lionakis Project Number
00000000001826	018322

Reference North: NORTH
Sheet Scale: 1/8" = 1'-0"
Sheet Number: S402M

ISSUE DATE
July 9, 2021

Plot Date: 3/19/2021 11:23:57 AM
File Name: BIM 360://CCC Willits Residential Center/018322_S-MASTER_R18_CENTRAL.rvt

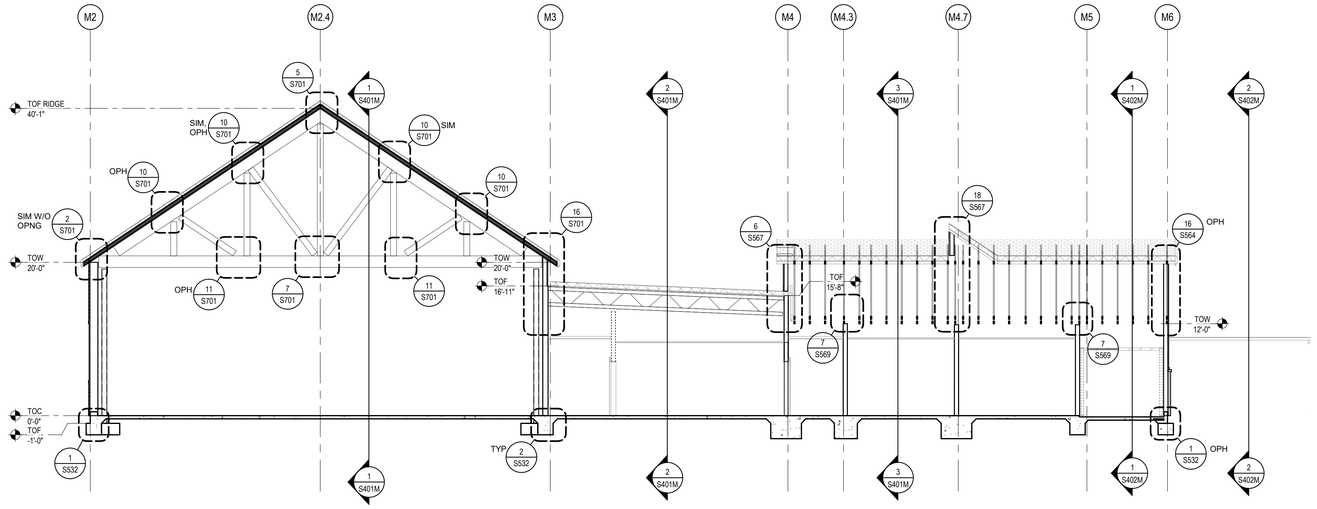

1 BLDG M - BUILDING SECTION

SCALE 1/8" = 1'-0"

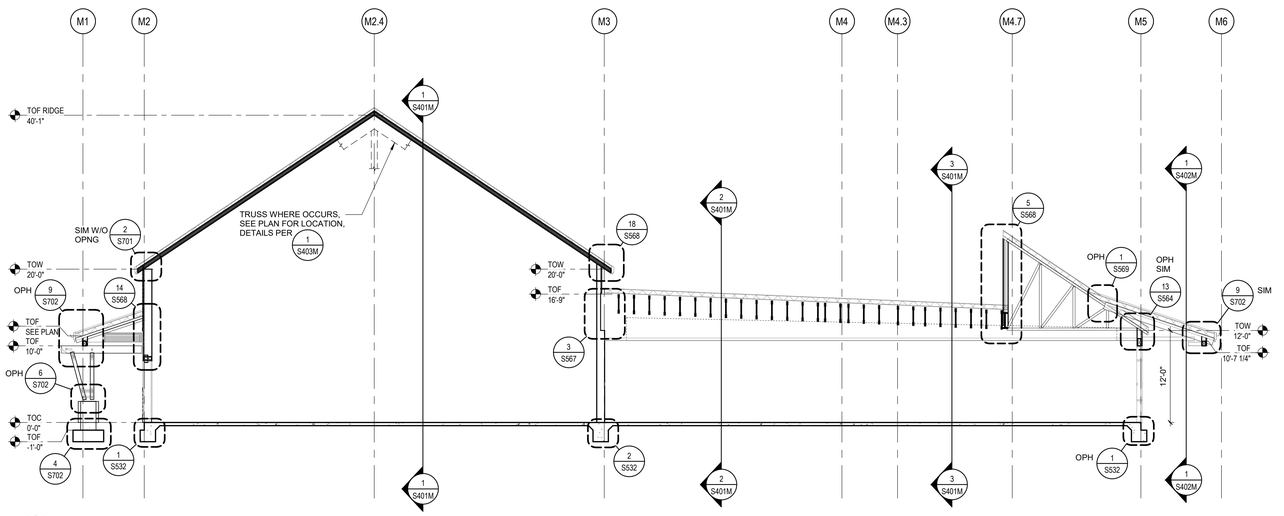

2 BLDG M - BUILDING SECTION

SCALE 1/8" = 1'-0"

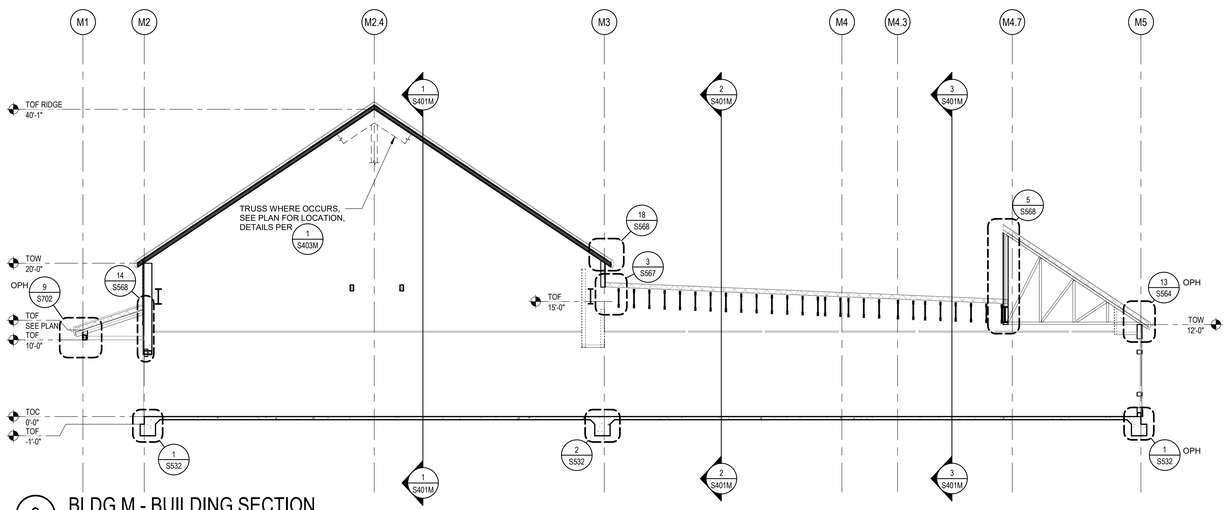

3 BLDG M - BUILDING SECTION

SCALE 1/8" = 1'-0"

KEY PLAN

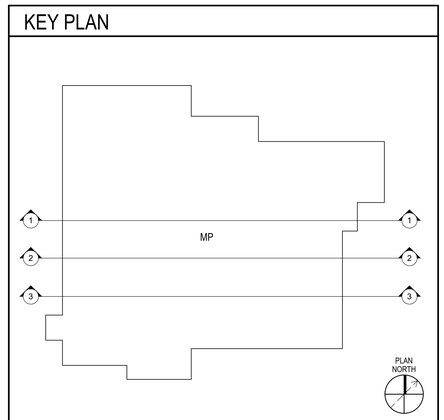

IDENTIFICATION STAMP
DIV. OF THE STATE ARCHITECT
APP: 02-118630 INC:
REVIEWED FOR
SS ☐ FLS ☐ ACS ☑
DATE: 04/13/2021

OFFICE OF THE STATE FIRE MARSHAL
APPROVED FIRE AND PANIC ONLY
Approval of this plan does not authorize or approve any omission or deviation from applicable regulations. Final approval is subject to field inspection. One set of approved plans shall be available on the project site at all times.
PERMIT NO. 20 N 2332-CP
REVIEWED BY: LEO CATAYLO, OSFM
DATE: 4 / /2021

DGS GENERAL SERVICES
Department of General Services
State of California
Real Estate Services Division
Project Management & Development Branch
707 Third Street, Suite 4-105
West Sacramento, California 95605

NICHOLS MELBURG & ROSSETTO
ARCHITECTS + ENGINEERS
300 Knollcrest Drive
Redding, CA 96002
(530) 222-3300 (530) 222-3538 FAX
http://www.nmrdesign.com

Copyright © 2021
All ideas, designs, arrangements and plans indicated or represented by this drawing are owned by, and the property of, NICHOLS, MELBURG and ROSSETTO and were created, evolved and developed for use on, and in conjunction with, the specified project. None of such ideas, designs, arrangements or plans shall be used by, or disclosed to any person, firm or corporation for any purpose whatsoever without the written permission of NICHOLS, MELBURG and ROSSETTO.

LICENSE STAMPS

REGISTERED PROFESSIONAL ENGINEER — MONROE HUNTINGTON — No. S4758 — STRUCTURAL — STATE OF CALIFORNIA
3/19/2021

STRUCTURAL CONSULTANT

LIONAKIS
1919 Nineteenth Street
Sacramento CA 95811
P 916.558.1900 F 916.558.1919
www.lionakis.com

DRAWING STATUS
CONSTRUCTION DOCUMENTS

ISSUE

No.	Date	Description
1	10/22/2020	INITIAL PLAN REVIEW
2	01/08/2021	AGENCY RESUBMITTAL
3	03/22/2021	AGENCY RESUBMITTAL

If drawing is not 30" x 42" it is a reduced print

PROJECT
RESIDENTIAL CENTER, UKIAH: REPLACEMENT OF EXISTING RESIDENTIAL CENTER
440 EAST HILL ROAD
WILLITS, CALIFORNIA 95490
MENDOCINO COUNTY
CALIFORNIA CONSERVATION CORP

Supervisor	Designed	Drawn
		Author

DSA Application No.
02-118630

SHEET TITLE
MULTI-PURPOSE STRUCTURAL BUILDING SECTIONS

DGS Project Number: 00000000001826
Lionakis Project Number: 018322

Reference North
Sheet Scale: 1/8" = 1'-0"
Sheet Number: S403M

ISSUE DATE
July 9, 2021

Plot Date: 3/19/2021 11:24:10 AM
File Name: BM 360 // CCC Willis Residential Center/018322_S-MASTER_R18_CENTRAL.rvt

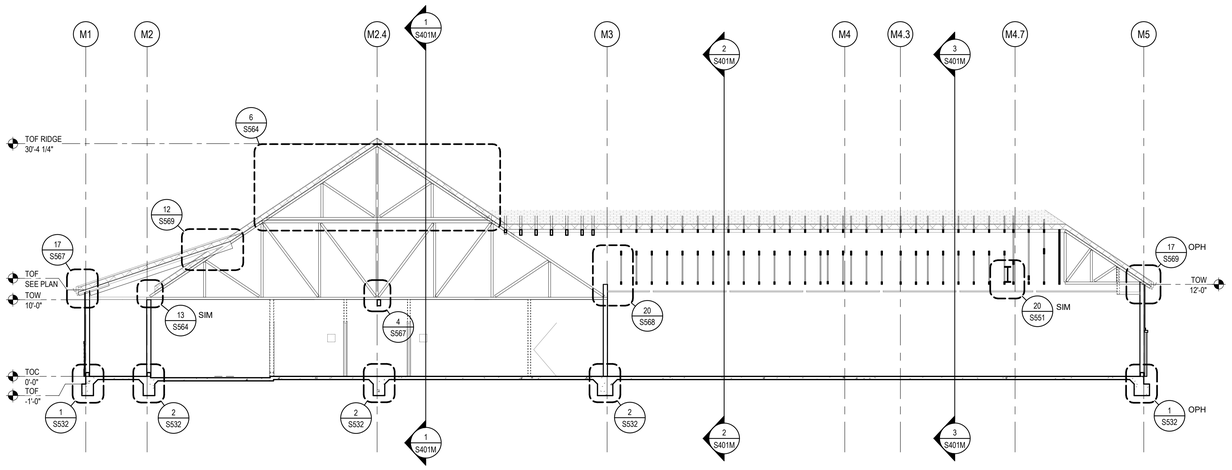

1 BLDG M - BUILDING SECTION

SCALE 1/8" = 1'-0"

2 BLDG M - BUILDING SECTION

SCALE 1/8" = 1'-0"

IDENTIFICATION STAMP
DIV. OF THE STATE ARCHITECT
APP: 02-118630 INC:
REVIEWED FOR
SS ☐ FLS ☐ ACS ☑
DATE: 04/13/2021

OFFICE OF THE STATE FIRE MARSHAL
APPROVED FIRE AND PANIC ONLY
Approval of this plan does not authorize or approve any omission or deviation from applicable regulations. Final approval is subject to field inspection. One set of approved plans shall be available on the project site at all times.
PERMIT NO. 20-N-2332-CP
REVIEWED BY: LEO CATAYLO, OSFM
DATE: 4 / /2021

DGS GENERAL SERVICES
Department of General Services
State of California
Real Estate Services Division
Project Management & Development Branch
707 Third Street, Suite 4-105
West Sacramento, California 95605

NICHOLS MELBURG & ROSSETTO
ARCHITECTS + ENGINEERS
300 Knollcrest Drive
Redding, CA 96002
(530) 222-3300 (530) 222-3538 FAX
http://www.nmrdesign.com

Copyright © 2021
All ideas, designs, arrangements and plans indicated or represented by this drawing are owned by, and the property of, NICHOLS, MELBURG and ROSSETTO and were created, evolved and developed for use on, and in conjunction with, the specified project. None of such ideas, designs, arrangements or plans shall be used by, or disclosed to any person, firm or corporation for any purpose whatsoever without the written permission of NICHOLS, MELBURG and ROSSETTO.

LICENSE STAMPS

REGISTERED PROFESSIONAL ENGINEER
HARDIN E. HUNTINGTON
No. S4709
STRUCTURAL
STATE OF CALIFORNIA
3/19/2021

STRUCTURAL CONSULTANT

LIONAKIS

1919 Nineteenth Street
Sacramento CA 95811
P 916.558.1900 F 916.558.1919
www.lionakis.com

DRAWING STATUS
CONSTRUCTION DOCUMENTS

ISSUE

No.	Date	Description
1	10/22/2020	INITIAL PLAN REVIEW
2	01/08/2021	AGENCY RESUBMITTAL
3	03/22/2021	AGENCY RESUBMITTAL

If drawing is not 30" x 42" it is a reduced print

KEY PLAN

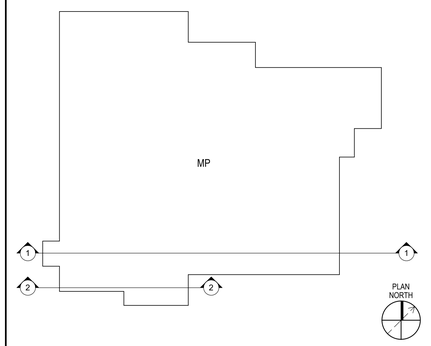

PROJECT
RESIDENTIAL CENTER, UKIAH: REPLACEMENT OF EXISTING RESIDENTIAL CENTER
440 EAST HILL ROAD
WILLITS, CALIFORNIA 95490
MENDOCINO COUNTY
CALIFORNIA CONSERVATION CORP

Supervisor	Designed	Drawn
		Author

DSA Application No.
02-118630

SHEET TITLE
MULTI-PURPOSE STRUCTURAL BUILDING SECTIONS

DGS Project Number	Lionakis Project Number
000000000001826	018322

Reference North
Sheet Scale
1/8" = 1'-0"
Sheet Number
S404M

ISSUE DATE
July 9, 2021

Plot Date: 3/19/2021 11:24:13 AM
File Name: BIM 360://CCC-Willits Residential Center/018322_S-MASTER_R18_CENTRAL.rvt

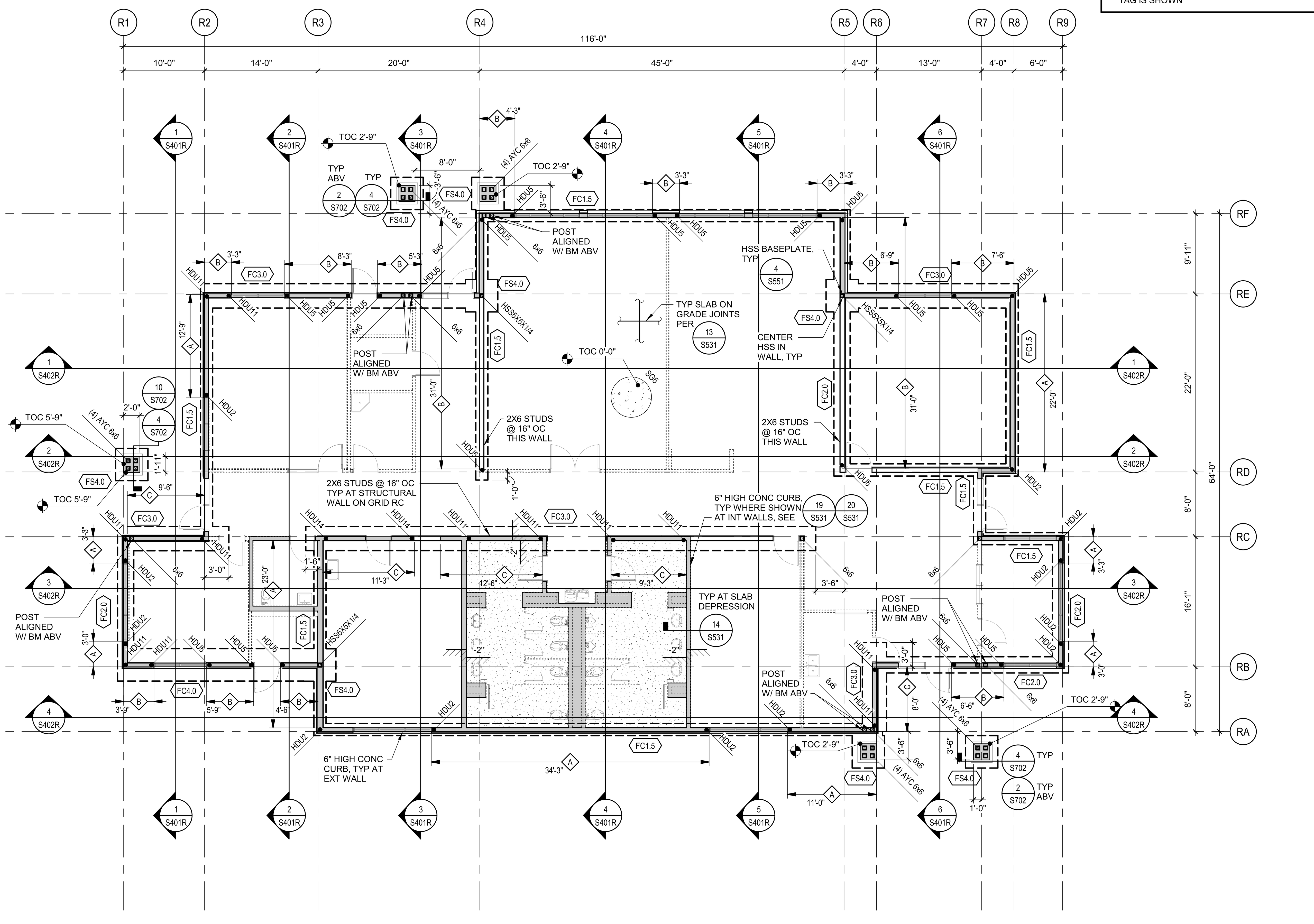

1 RECREATION BUILDING FLOOR PLAN

SCALE 1/8" = 1'-0"

SHEAR WALL SCHEDULE

S- 060600_N001A
170126. Q2

WALL MARK	SP EDGE NAILING	SILL PLATE THICKNESS	STUDS OR BLKG AT PANEL EDGES	SILL PLATE ANCHORAGE: AB'S TO CONC	SILL PLATE ANCHORAGE: NAILS TO WOOD FRAMING	STRUCTURAL PANEL 15/32" STRUCT I
A	8D @ 6" OC	2X	2X	5/8" DIA @ 48" OC	16D @ 6" OC	ONE SIDE
B	8D @ 4" OC	3X	3X	5/8" DIA @ 40" OC	SEE SECTIONS AND DETAILS	ONE SIDE
C	8D @ 3" OC	3X	3X	5/8" DIA @ 32" OC		ONE SIDE
D	8D @ 2" OC	3X	3X	5/8" DIA @ 24" OC		ONE SIDE
E	8D @ 4" OC	3X	3X	5/8" DIA @ 16" OC		BOTH SIDES
F	8D @ 3" OC	3X	3X	5/8" DIA @ 8" OC		BOTH SIDES
G	10D @ 2" OC	3X	3X	5/8" DIA @ 8" OC		BOTH SIDES

1. SEE 18/S563 FOR TYP SHEAR WALL SP LAYOUT.
2. EDGE NAILING OCCURS AT EVERY PANEL EDGE. FIELD NAILING SHALL BE 8D @ 12" OC, EXCEPT AT TYPE G FIELD NAILING SHALL BE 10D @ 12" OC.
3. NAILS SHALL BE STEEL WIRE COMMON TYPE OF THE SIZES DENOTED. DRIVE STRUCTURAL PANEL NAILS SO THAT THE NAIL HEADS ARE FLUSH WITH THE SURFACE OF THE PANEL. DO NOT OVERDRIVE NAILS. STAGGER NAILS AT EACH SIDE OF JOINTS.
4. STRUCTURAL PANELS SHALL HAVE A PANEL SPAN RATING OF 32/16. OSB OR 5-PLY/5-LAYER PLYWOOD.
5. BLOCK PANEL EDGES WITH FULL STUD WIDTH BLOCKING OF THICKNESS SPECIFIED.
6. SILL PLATE NAILING IS TO PARALLEL FRAMING BELOW (WHETHER BLKG OR CONT). PROVIDE (2) ADDITIONAL NAILS OF SIZE SHOWN TO EA PERPENDICULAR FRAMING BELOW.
7. PREDRILL NAIL HOLES IF SPLITTING OCCURS. STAGGER NAILING TO PREVENT SPLITTING.
8. WHERE STRUCTURAL PANELS OCCUR AT BOTH SIDES OF WALL, STAGGER PANEL JOINTS AT EACH FACE SO THEY DO NOT FALL ON THE SAME STUD OR BLOCKING.
9. FA SPACING AT SHEAR WALLS SHALL BE 3X THE EDGE NAIL SPACING FOR ONE-SIDED SHEAR WALLS, AND 6" OC FOR WALLS WITH STRUCTURAL PANELS ON BOTH SIDES.
10. PROVIDE STRUCTURAL PANELS FULL LENGTH AND HEIGHT OF ALL EXTERIOR WALLS AND AT INTERIOR WALLS AS SHOWN ON SECTIONS AND DETAILS. MINIMUM STRUCTURAL PANEL NAILING SHALL BE TYPE A UNO. SEE PLANS FOR HEAVIER NAILING LOCATIONS NOTED BY WALL MARKS THUS:

MIN LENGTH OF SHEAR WALL SEGMENT (NOT ACTUAL LENGTH)
SEE SECTIONS & DETAILS FOR SIDE OF WALL REQUIRING STRUCTURAL PANELS, UNO ON SECTIONS OR DETAILS, SP SHALL BE ON THE SIDE WHERE TAG IS SHOWN
X'-X" X WALL LINE
WHERE EXTENT IS INDICATED, REMAINDER OF WALL LINE REQUIRES TYPE A UNO
IF NO EXTENT IS INDICATED THE ENTIRE WALL LINE REQUIRES THE TYPE NOTED

NOTES

170828. Q2

1. SEE S000 SERIES SHEETS FOR GENERAL NOTES & S500 SERIES SHEETS FOR TYPICAL DETAILS.
2. DIMENSIONS ARE TO FOS OR CENTERLINE OF COLUMNS/POSTS, UNO. SEE SECTIONS & DETAILS FOR FOC LOCATIONS RELATIVE TO FOS.
3. SEE ARCH & OTHER CONSULTANT DWGS FOR DIMENSIONS & LOCATIONS OF WALL OPENINGS.
4. SEE ARCH DWGS FOR DIMENSIONS OF SLAB DEPRESSIONS & SLOPED SLABS.
5. SEE ARCH & OTHER CONSULTANT DWGS FOR PENETRATIONS NOT SHOWN. COMPLY WITH TYPICAL DETAILS.
6. SEE CIVIL DRAWINGS AND SPECIFICATIONS FOR ENGINEERED FILL.
7. EXTERIOR CONCRETE FLATWORK IS NOT SHOWN, SEE CIVIL & ARCH DWGS.
8. CONTINUOUS WALL FOOTINGS TO BE CENTERED UNDER WALLS AND PAD FOOTINGS TO BE CENTERED UNDER COLUMNS, TYP UNO.
9. TOP OF FOOTINGS SHALL BE 1'-0" BELOW FINISHED FLOOR (TOF -1'-0"), TYP UNO. SEE ARCH & OTHER CONSULTANT DRAWINGS FOR UTILITIES THAT WILL AFFECT FOOTINGS AND COMPLY WITH TYPICAL DETAILS.
10. CONTINUOUS FOOTINGS ARE FC1.5, TYP UNO. SEE SCHEDULE FOR CONTINUOUS FOOTING SIZE & REINF.
11. CONCRETE SLAB OVER SUB BASE SHALL BE SG5, TYP UNO. SEE SCHEDULE FOR MORE INFORMATION.
12. EXTERIOR WALLS ARE 2x6 STUDS @ 16" OC, TYP UNO.
13. TOC = 0'-0" TYP UNO (SEE CIVIL DRAWINGS FOR DATUM ELEVATION).

SCHEDULES

DECK SCHEDULE

TYPE	DESCRIPTION
SG5	5" CONC W/ #4 @ 16" OC EA WAY CENTERED IN SLAB O/ VAPOR RETARDER O/ 4" FREE DRAINING CRUSHED ROCK
SG12	12" CONC W/ #4 @ 16" OC T&B EA WAY O/ VAPOR RETARDER O/ 4" FREE DRAINING CRUSHED ROCK

CONTINUOUS FOOTING SCHEDULE

TYPE	WIDTH	DEPTH	REINFORCEMENT
FC1.5	1'-6"	1'-6"	(2) CONT #5 T&B
FC2.0	2'-0"	1'-6"	(3) CONT #5 T&B
FC3.0	3'-0"	1'-6"	(4) CONT #5 T&B AND #4 TIES @ 18" OC
FC3.1	3'-0"	2'-0"	(4) CONT #5 T&B AND #4 TIES @ 18" OC
FC4.0	4'-0"	1'-6"	(5) CONT #5 T&B AND #4 TIES @ 18" OC
FC4.1	4'-0"	2'-0"	(5) CONT #5 T&B AND #4 TIES @ 18" OC

SPREAD FOOTING SCHEDULE

TYPE	SIZE	DEPTH	REINFORCEMENT
FS2.0	2'-0"x2'-0"	1'-6"	(3) #5 EW AT BOT
FS3.0	3'-0"x3'-0"	1'-6"	(4) #5 EW AT BOT
FS4.0	4'-0"x4'-0"	1'-6"	(5) #5 EW AT BOT
FS4.1	4'-0"x4'-0"	2'-0"	(7) #5 EW AT BOT
FS5.0	5'-0"x5'-0"	1'-6"	(7) #5 EW AT BOT
FS5.1	5'-0"x5'-0"	2'-0"	(9) #5 EW AT BOT
FS6.1	6'-0"x4'-0"	1'-6"	#5 @ 12" OC EW AT BOT
FS7.1	7'-0"x7'-0"	2'-0"	(9) #6 EW AT BOT

LEGEND

170828. Q1

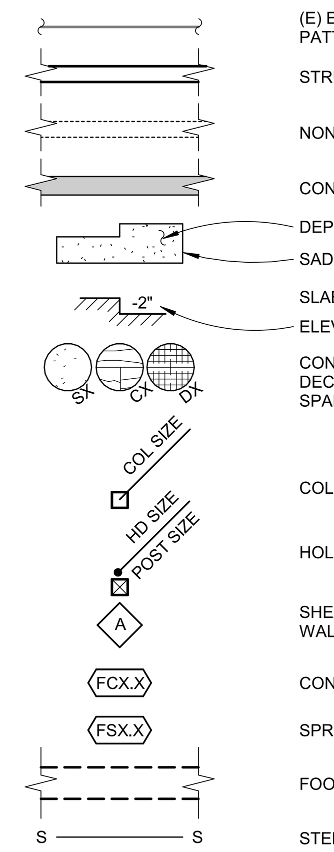

(E) ELEMENTS SHOWN FADED - LINETYPE AND PATTERN/HATCHING AS NOTED FOR NEW CONSTRUCTION
STRUCTURAL WALL, SEE 10/S561
NON-STRUCTURAL WALL, SAD, FOR ATTACHMENT, SEE 4/S561
CONCRETE CURB OR PAD 10/S561
DEPRESSED SLAB AREA
SAD FOR EXTENTS
SLAB STEP SYMBOL
ELEVATION RELATIVE TO TOC
CONC SLAB / PLYWOOD / CLT DECK (SOLID LINE INDICATED SPAN OF DIRECTION OF CLT)
COLUMN WITH CALLOUT
HOLDOWN & REQUIRED POST, SEE 16/S563
SHEAR WALL TYPE, SEE "SHEAR WALL SCHEDULE"
CONTINUOUS FOOTING TAG
SPREAD FOOTING TAG
FOOTING
STEPPED FOOTING

KEY PLAN

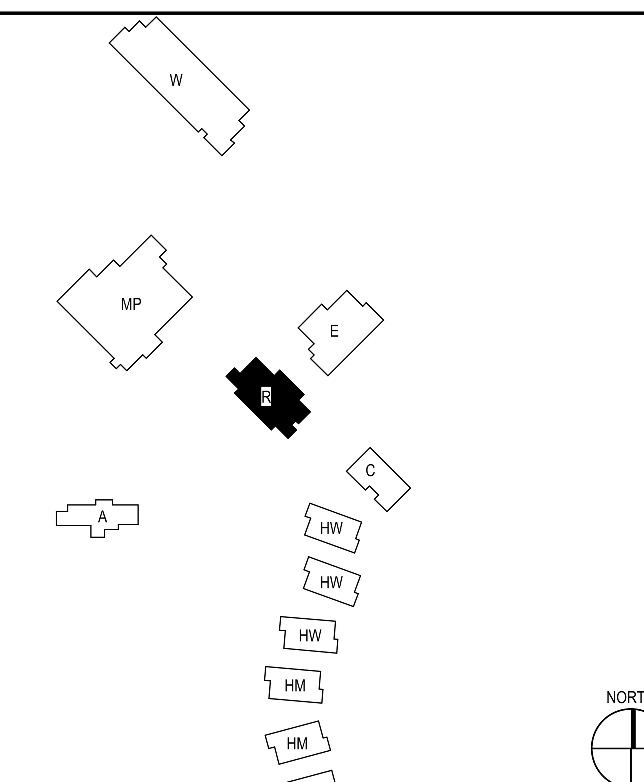

IDENTIFICATION STAMP
DIV. OF THE STATE ARCHITECT
APP: 02-118630 INC:
REVIEWED FOR
SS ☐ FLS ☐ ACS ☑
DATE: 04/13/2021

OFFICE OF THE STATE FIRE MARSHAL
APPROVED FIRE AND PANIC ONLY
Approval of this plan does not authorize or approve any omission or deviation from applicable regulations. Final approval is subject to field inspection. One set of approved plans shall be available on the project site at all times.
PERMIT NO.: 20-N-2332-CP
REVIEWED BY: LITO CATAYLO, OSFM
DATE: 3/ / /2021

DGS
GENERAL SERVICES
Department of General Services
State of California
Real Estate Services Division
Project Management & Development Branch
707 Third Street, Suite 4-105
West Sacramento, California 95605

NM&R
NICHOLS MELBURG & ROSSETTO
ARCHITECTS + ENGINEERS
300 Knollcrest Drive
Redding, CA. 96002
(530) 222-3300 (530) 222-3538 FAX
http://www.nmrdesign.com

Copyright © 2021
All ideas, designs, arrangements and plans indicated or represented by this drawing are owned by, and the property of, NICHOLS, MELBURG and ROSSETTO and were created, evolved and developed for use on, and in conjunction with, the specified project. None of such ideas, designs, arrangements or plans shall be used by, or disclosed to any person, firm or corporation for any purpose whatsoever without the written permission of NICHOLS, MELBURG and ROSSETTO.

LICENSE STAMPS
REGISTERED PROFESSIONAL ENGINEER
DARRON E. HUNTINGDALE
No. S4788
STRUCTURAL
STATE OF CALIFORNIA
3/19/2021

STRUCTURAL CONSULTANT
LIONAKIS
1919 Nineteenth Street
Sacramento CA 95811
P 916.558.1900 F 916.558.1919
www.lionakis.com

DRAWING STATUS
CONSTRUCTION DOCUMENTS

ISSUE

No.	Date	Description
1	10/22/2020	INITIAL PLAN REVIEW
2	01/08/2021	AGENCY RESUBMITTAL
3	03/22/2021	AGENCY RESUBMITTAL

If drawing is not 30" x 42" it is a reduced print

PROJECT
RESIDENTIAL CENTER, UKIAH: REPLACEMENT OF EXISTING RESIDENTIAL CENTER
440 EAST HILL ROAD
WILLITS, CALIFORNIA 95490
MENDOCINO COUNTY
CALIFORNIA CONSERVATION CORP

Supervisor	Designed	Drawn
		Author

DSA Application No.
02-118630

SHEET TITLE
RECREATION FOUNDATION PLAN

DGS Project Number 000000000001826
Lionakis Project Number 018322

Reference North
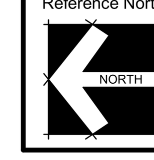

Sheet Scale
As indicated

Sheet Number
S201R

ISSUE DATE
July 9, 2021

Plot Date: 3/19/2021 11:20:10 AM
File Name: BIM 360://CCC Willits Residential Center/018322_S-MASTER_R18_CENTRAL.rvt

TRUSS SCHEDULE

DESIGNATION	TRUSS CONFIGURATION	DESIGNATION	TRUSS CONFIGURATION
T-R1	RB, RC; 8/12 slopes; NO TRUSS OVERHANG WHERE OVERFRAMING OCCURS BETWEEN GRID R1 AND R2	T-R5	RC, RE, RF; 8/12, 4/12 slopes; CAP TRUSS AS REQ BY MFR, SEE 6/S564; ADDL BEARING POINT WHERE OCCURS, SEE PLAN; COLLECTOR TRUSS P_{LAT} = SEE PLAN; BM WHERE OCCURS, SEE PLAN
T-R2	RB, RC, RD, RE; 8/12 slopes; ADDL BEARING POINTS WHERE OCCURS, SEE PLAN; VENT AT GABLE END WHERE OCCURS, SAD, COORDINATE TRUSS WEBS AS REQ; CAP TRUSS AS REQ BY MFR, SEE 6/S564; COLLECTOR TRUSS P_{LAT} = SEE PLAN	T-R6	RA, RB, RC; 4/12 slope; BM, SEE PLAN; GIRDER TRUSS, SEE PLAN
T-R3	RA, RC; 4/12, 8/12 slopes; CAP TRUSS AS REQ BY MFR, SEE 6/S564; SEE PLAN/DETAILS FOR WHERE CANOPY OCCURS; COLLECTOR TRUSS P_{LAT} = SEE PLAN; LEDGER, SEE DETAILS	T-R7	RD, RE; 8/12 slope; CAP TRUSS AS REQ BY MFR, SEE 6/S564
T-R4	RC, RE; 8/12 slopes; CAP TRUSS AS REQ, SEE 6/S564; COLLECTOR TRUSS P_{LAT} = SEE PLAN; BEAM, WHERE OCCURS, SEE PLAN		

NOTES:
1. TRUSS CONFIGURATIONS SHOWN ARE A DIAGRAMATIC OUTLINE INDICATING BEARING SUPPORTS. TRUSS WEB MEMBERS ARE NOT SHOWN AND MAY VARY BETWEEN TRUSS MANUFACTURERS.
2. REFER TO "METAL-PLATE WOOD TRUSSES" NOTES ON SHEET S012 FOR TRUSS DESIGN AND DETAILING REQUIREMENTS.
3. MANUFACTURED ROOF TRUSS LOADS AS SHOWN ON PLAN ARE UNFACTORED DESIGN LOADS. WIND AND SEISMIC LOADS ARE LRFD DESIGN LEVEL FORCES. LOADS SHOWN ON PLAN ARE IN ADDITION TO THE TRUSS DESIGN/LOADING AND DETAILING REQUIREMENTS ON SHEET S012.
4. BEARING POINTS ARE SHOWN AT GRIDS, SEE DETAILS FOR FACE OF STUD RELATIVE TO BEARING LENGTH AND LOCATION. SEE DETAILS FOR WHERE LEDGERS, TRUSS HANGERS OR BEAMS ARE USED AS BEARING POINTS.
5. PROVIDE DIAPHRAGM BOUNDARY NAILING PATTERN AT COLLECTOR TRUSSES, UNO.

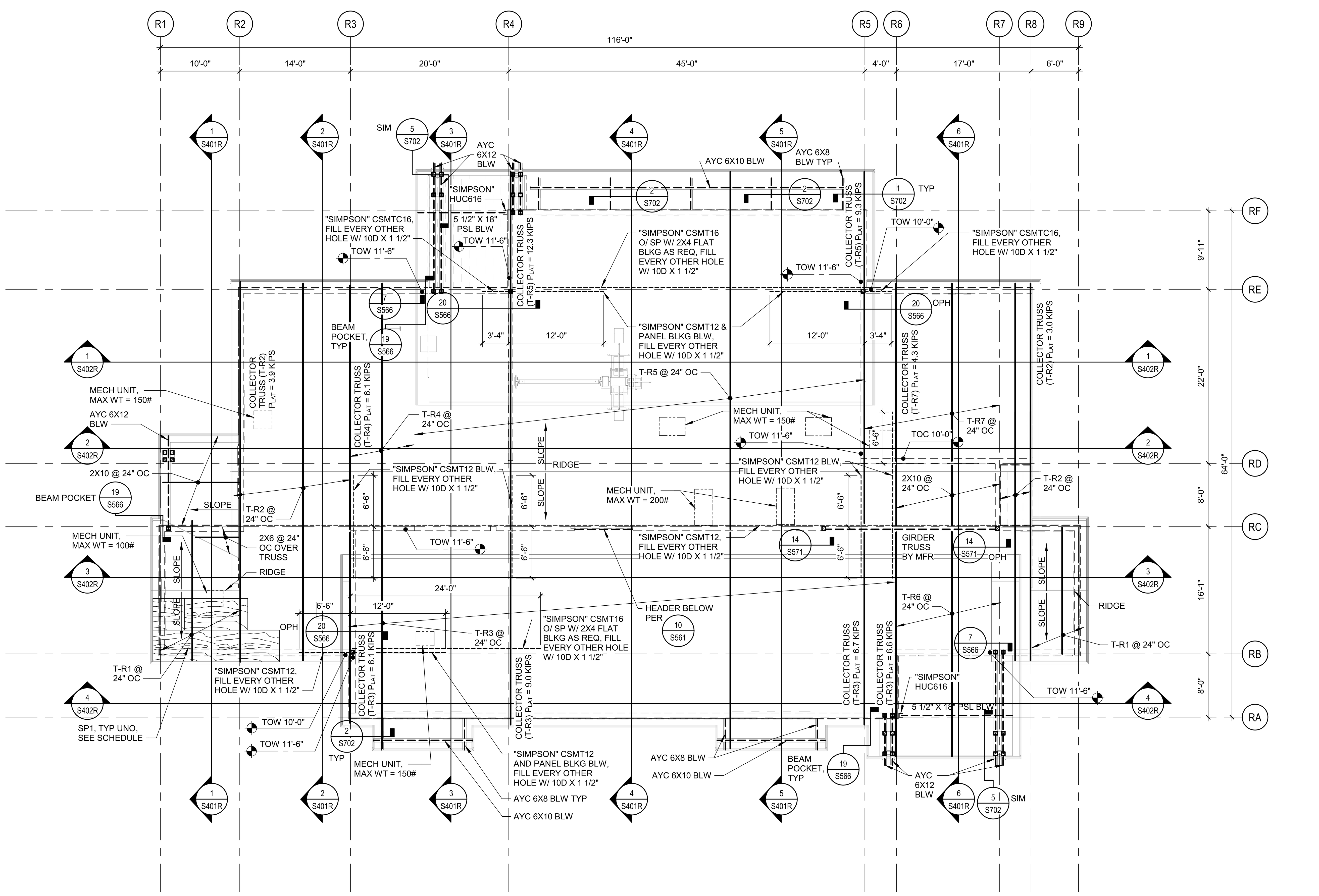

1 RECREATION BUILDING ROOF FRAMING PLAN
SCALE 1/8" = 1'-0"

PLAN NORTH

Plot Date: 3/19/2021 11:20:25 AM
File Name: BIM 360://CCC Willits Residential Center/018322_S-MASTER_R18_CENTRAL.rvt

NOTES

S- 010000_N001A 170828. Q2

1. SEE S000 SERIES SHEETS FOR GENERAL NOTES & S500 SERIES SHEETS FOR TYPICAL DETAILS.
2. SEE S200 SERIES SHEETS FOR WALL & FRAMING ELEVATIONS.
3. DIMENSIONS ARE TO FOS OR CENTERLINE OF COLUMNS/POSTS, UNO.
4. SEE ARCH & OTHER CONSULTANT DWGS FOR DIMENSIONS & LOCATIONS OF WALL OPENINGS. SEE TYPICAL DETAILS FOR FRAMING AT OPENINGS.
5. SEE ARCH & OTHER CONSULTANT DWGS FOR ROOF PENETRATIONS NOT SHOWN. PROVIDE FRAMING AROUND OPENINGS PER TYPICAL DETAILS. SAWCUT OR CORE DRILL CLEAN HOLES WITH NO OVERCUTTING. CONFORM WITH TYPICAL DETAILS.
6. SEE ARCH DWGS FOR DIMENSIONS OF ROOF OVERHANGS, UNO.
7. EXTERIOR WALLS ARE 2x6 STUDS @ 16" OC, TYP UNO.
8. PROVIDE STRUCTURAL PANEL EDGE NAILING TO THE FULL LENGTH OF ALL GLB's, AND MANUFACTURED TRUSSES, I-JOISTS, RIM JOISTS AND BLOCKING AT SHEAR WALLS. SEE PLANS FOR LOCATIONS WHERE DOUBLE ROWS OF EDGE NAILING OCCUR.
9. CAMBER IN GLU-LAM BEAMS SHALL BE 1600' RADIUS, TYP UNO.
10. SEE S-000 SHEETS FOR MANUFACTURED ROOF TRUSS DESIGN CRITERIA.
11. AT EXTERIOR EXPOSED WOOD PROVIDE ALASKAN YELLOW CEDAR, REFER TO DETAILS.

SP NAILING SCHEDULE

S- 061100_N001A 170126. Q2

WOOD STRUCTURAL PANEL NAILING SCHEDULE (UNO)

- PROVIDE 1/8" SPACE BETWEEN SHEETS FOR ALL SP SHEATHING.
- MIN SHEET WIDTH SHALL BE 24" FOR ROOF & FLOOR, 12" FOR WALLS.
- SEE 17/S563 FOR TYP STRUCTURAL PANEL LAYOUT.

SP1 - 19/32" STRUCT I SP, APA SPAN RATED 40/20
ARRANGE SHEETS AS SHOWN ON ROOF FRAMING PLAN

EN AT PERIMETER OF EA SHEET	8D @ 6" OC
FN AT INTERIOR CONTACTS OF EA SHEET	8D @ 12" OC
BN AT PERIMETER OF ROOF	8D @ 6" OC

THIS DIAPHRAGM IS NOT DESIGNED AS A BLOCKED DIAPHRAGM. SIDE JOINTS SHALL BE SUPPORTED PER 17/S563.

LEGEND

180621 Q1

- (E) ELEMENTS SHOWN FADED - LINETYPE AND PATTERN/HATCHING AS NOTED FOR NEW CONSTRUCTION
- STRUCTURAL WALL, SEE 10/S561
- NON-STRUCTURAL WALL, SAD, FOR ATTACHMENT, SEE 4/S561
- CONCRETE CURB OR PAD 10/S561
- DEPRESSED SLAB AREA
- SAD FOR EXTENTS
- SLAB STEP SYMBOL
- ELEVATION RELATIVE TO TOC
- CONC SLAB / PLYWOOD / CLT DECK (SOLID LINE INDICATED SPAN OF DIRECTION OF CLT)
- COLUMN WITH CALLOUT
- HOLDOWN & REQUIRED POST, SEE 16/S563
- SHEAR WALL TYPE, SEE "SHEAR WALL SCHEDULE"
- BEAM SIZE (W24X55)
- BEAM CAMBER (C=2")
- BEAM SPLICE
- TRUSS W/ SUPERIMPOSED LOADS

KEY PLAN

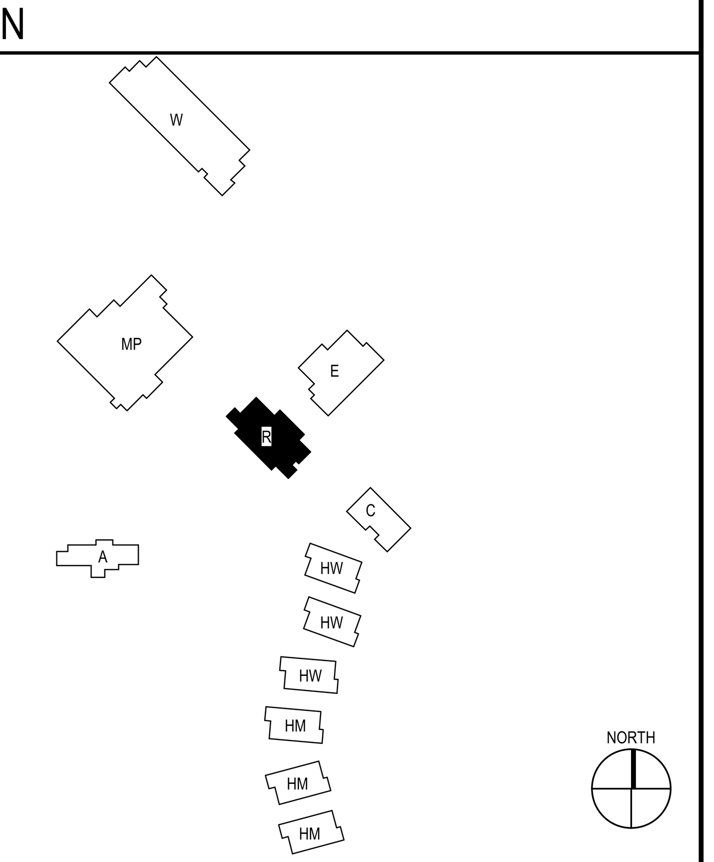

IDENTIFICATION STAMP
DIV. OF THE STATE ARCHITECT
APP: 02-118630 INC:
REVIEWED FOR
SS ☐ FLS ☐ ACS ☑
DATE: 04/13/2021

OFFICE OF THE STATE FIRE MARSHAL
APPROVED FIRE AND PANIC ONLY
Approval of this plan does not authorize or approve any omission or deviation from applicable regulations. Final approval is subject to field inspection. One set of approved plans shall be available on the project site at all times.
PERMIT NO. 20-N-2332-CP
REVIEWED BY: LEO CATAYLO, OSFM
DATE: 4/1/2021

GENERAL SERVICES
Department of General Services
State of California
Real Estate Services Division
Project Management & Development Branch
707 Third Street, Suite 4-105
West Sacramento, California 95605

NICHOLS MELBURG & ROSSETTO
ARCHITECTS + ENGINEERS
300 Knollcrest Drive
Redding, CA. 96002
(530) 222-3300 (530) 222-3538 FAX
http://www.nmrdesign.com

Copyright © 2021
All ideas, designs, arrangements and plans indicated or represented by this drawing are owned by, and the property of, NICHOLS, MELBURG and ROSSETTO and were created, evolved and developed for use on, and in conjunction with, the specified project. None of such ideas, designs, arrangements or plans shall be used by, or disclosed to any person, firm or corporation for any purpose whatsoever without the written permission of NICHOLS, MELBURG and ROSSETTO.

LICENSE STAMPS
REGISTERED PROFESSIONAL ENGINEER
No. S4169
STRUCTURAL
STATE OF CALIFORNIA
3/19/2021

STRUCTURAL CONSULTANT

LIONAKIS
1919 Nineteenth Street
Sacramento CA 95811
P 916.558.1900 F 916.558.1919
www.lionakis.com

DRAWING STATUS
CONSTRUCTION DOCUMENTS

ISSUE

No.	Date	Description
1	10/22/2020	INITIAL PLAN REVIEW
2	01/08/2021	AGENCY RESUBMITTAL
3	03/22/2021	AGENCY RESUBMITTAL

If drawing is not 30" x 42" it is a reduced print

PROJECT
RESIDENTIAL CENTER, UKIAH: REPLACEMENT OF EXISTING RESIDENTIAL CENTER
440 EAST HILL ROAD
WILLITS, CALIFORNIA 95490
MENDOCINO COUNTY
CALIFORNIA CONSERVATION CORP

Supervisor	Designed	Drawn
		Author

DSA Application No.
02-118630

SHEET TITLE
RECREATION ROOF FRAMING PLAN

DGS Project Number	Lionakis Project Number
000000000001826	018322

Reference North
Sheet Scale: As indicated
Sheet Number: S202R

ISSUE DATE
July 9, 2021

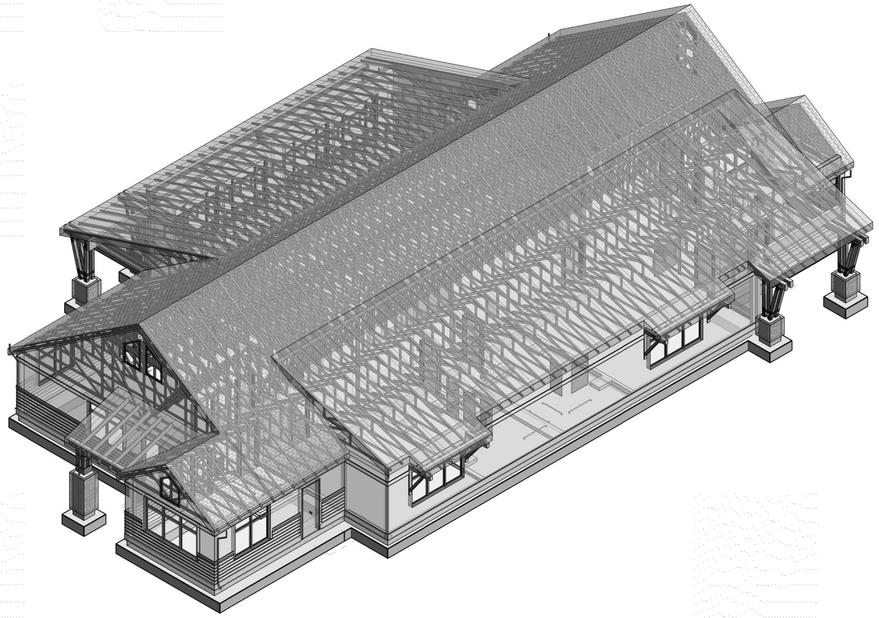

1 BUILDING R - VIEW 1
SCALE

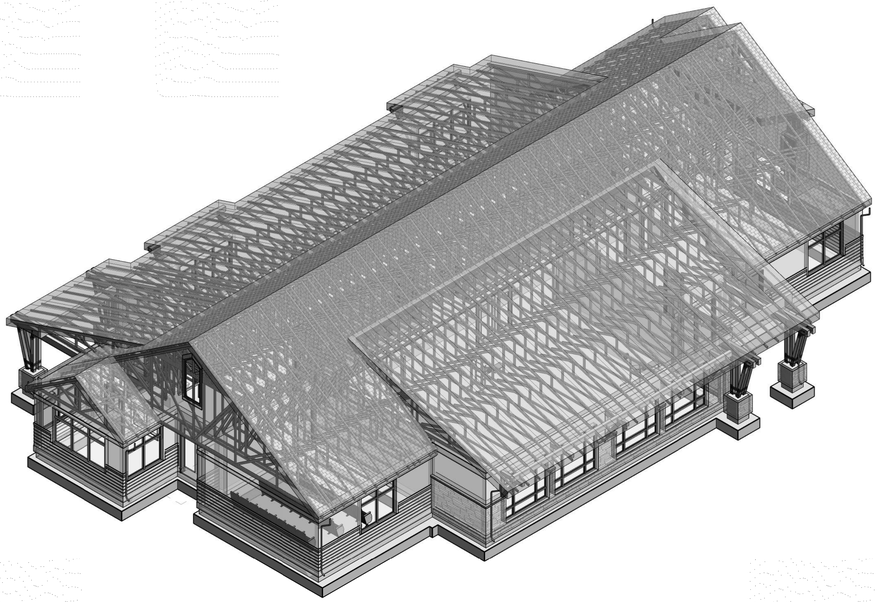

2 BUILDING R - VIEW 2
SCALE

3D VIEW NOTES

170828. Q1

1. FRAMING SHOWN IN THESE VIEWS IS FOR GENERAL INFORMATION ONLY. THE BALANCE OF STRUCTURAL DOCUMENT TAKE PRECEDENCE OVER 3D VIEWS.
2. NOT ALL FRAMING MAY BE SHOWN. SEE CONSTRUCTION DOCUMENTS FOR ADDITIONAL FRAMING MEMBERS REQUIRED.

KEY PLAN

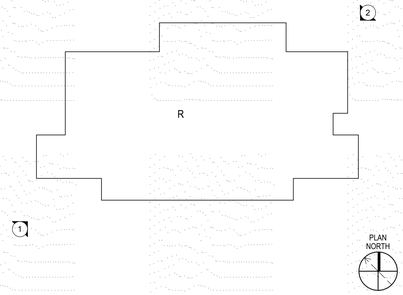

IDENTIFICATION STAMP
DIV. OF THE STATE ARCHITECT
APP: 02-118630 INC:
REVIEWED FOR
SS ☐ FLS ☐ ACS ☑
DATE: 04/13/2021

OFFICE OF THE STATE FIRE MARSHAL
APPROVED FIRE AND PANIC ONLY
Approval of this plan does not authorize or approve any omission or deviation from applicable regulations. Final approval is subject to field inspection. One set of approved plans shall be available on the project site at all times.
PERMIT NO. 20-N-2332-CP
REVIEWED BY: LEO CATAYLO, OSFM
DATE: 4 / /2021

DGS GENERAL SERVICES
Department of General Services
State of California
Real Estate Services Division
Project Management & Development Branch
707 Third Street, Suite 4-105
West Sacramento, California 95605

NICHOLS MELBURG & ROSSETTO
ARCHITECTS + ENGINEERS
300 Knollcrest Drive
Redding, CA 96002
(530) 222-3300 (530) 222-3538 FAX
http://www.nmrdesign.com

Copyright © 2021
All ideas, designs, arrangements and plans indicated or represented by this drawing are owned by, and the property of, NICHOLS, MELBURG and ROSSETTO and were created, evolved and developed for use on, and in conjunction with, the specified project. None of such ideas, designs, arrangements or plans shall be used by, or disclosed to any person, firm or corporation for any purpose whatsoever without the written permission of NICHOLS, MELBURG and ROSSETTO.

LICENSE STAMPS

REGISTERED PROFESSIONAL ENGINEER
CHRISTOPHER E. HUNTINGFORD
No. S47599
STRUCTURAL
STATE OF CALIFORNIA
3/19/2021

STRUCTURAL CONSULTANT

LIONAKIS
1919 Nineteenth Street
Sacramento CA 95811
P 916.558.1900 F 916.558.1919
www.lionakis.com

DRAWING STATUS
CONSTRUCTION DOCUMENTS

ISSUE

No.	Date	Description
1	10/22/2020	INITIAL PLAN REVIEW
2	01/08/2021	AGENCY RESUBMITTAL
3	03/22/2021	AGENCY RESUBMITTAL

If drawing is not 30" x 42" it is a reduced print

PROJECT
RESIDENTIAL CENTER, UKIAH: REPLACEMENT OF EXISTING RESIDENTIAL CENTER
440 EAST HILL ROAD
WILLITS, CALIFORNIA 95490
MENDOCINO COUNTY
CALIFORNIA CONSERVATION CORP

Supervisor	Designed	Drawn
		Author

DSA Application No.
02-118630

SHEET TITLE
RECREATION 3D VIEWS

DGS Project Number: 00000000001826
Lionakis Project Number: 018322

Reference North: NORTH
Sheet Scale: 12" = 1'-0"
Sheet Number: S211R

ISSUE DATE
July 9, 2021

Plot Date: 3/19/2021 11:20:37 AM
File Name: BIM 360://CCO Willits Residential Center/018322_S-MASTER_R18_CENTRAL.rvt

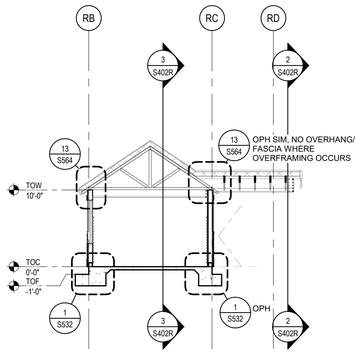

1 BLDG R - BUILDING SECTION
SCALE 1/8" = 1'-0"

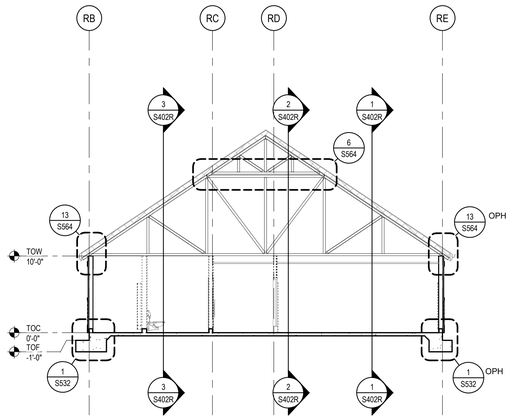

2 BLDG R - BUILDING SECTION
SCALE 1/8" = 1'-0"

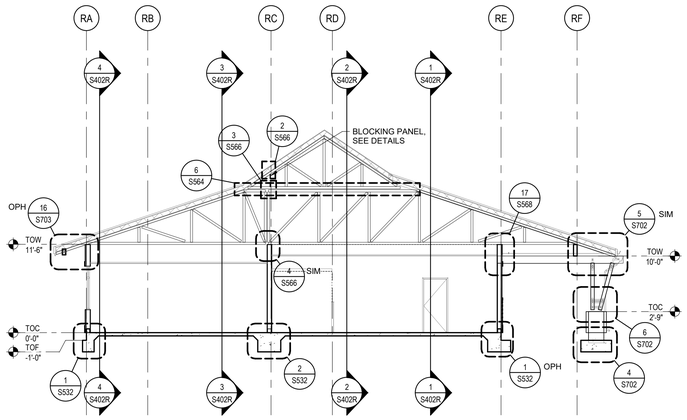

3 BLDG R - BUILDING SECTION
SCALE 1/8" = 1'-0"

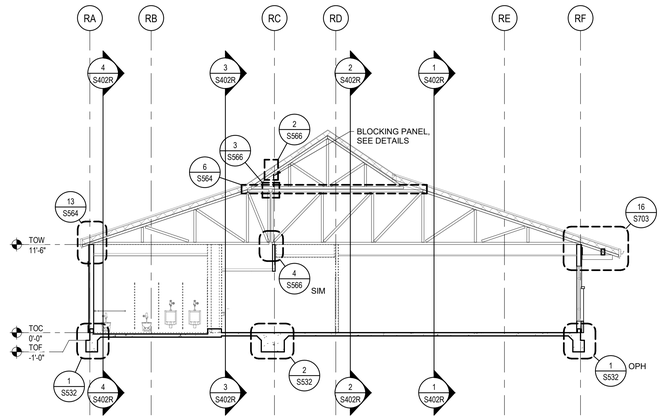

4 BLDG R - BUILDING SECTION
SCALE 1/8" = 1'-0"

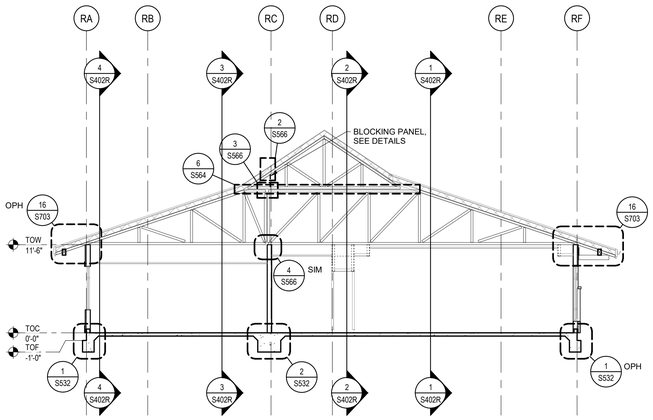

5 BLDG R - BUILDING SECTION
SCALE 1/8" = 1'-0"

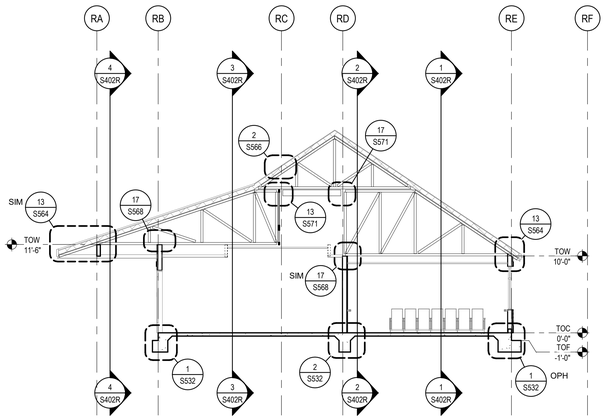

6 BLDG R - BUILDING SECTION
SCALE 1/8" = 1'-0"

Plot Date: 3/19/2021 11:29:41 AM
File Name: BIM 360://CCC Willits Residential Center/018322_S-MASTER_R18_CENTRAL.rvt

IDENTIFICATION STAMP
DIV. OF THE STATE ARCHITECT
APP: 02-118630 INC:
REVIEWED FOR
SS ☐ FLS ☐ ACS ☑
DATE: 04/13/2021

OFFICE OF THE STATE FIRE MARSHAL
APPROVED FIRE AND PANIC ONLY
Approval of this plan does not authorize or approve any omission or deviation from applicable regulations. Final approval is subject to field inspection. One set of approved plans shall be available on the project site at all times.
PERMIT NO. 20-N-2332-CP
REVIEWED BY: LEO CATAYLO, OSFM
DATE: 4 / /2021

DGS GENERAL SERVICES
Department of General Services
State of California
Real Estate Services Division
Project Management & Development Branch
707 Third Street, Suite 4-105
West Sacramento, California 95605

NICHOLS MELBURG & ROSSETTO ARCHITECTS + ENGINEERS
300 Knollcrest Drive
Redding, CA 96002
(530) 222-3300 (530) 222-3538 FAX
http://www.nmrdesign.com

Copyright © 2021
All ideas, designs, arrangements and plans indicated or represented by this drawing are owned by, and the property of, NICHOLS, MELBURG and ROSSETTO and were created, evolved and developed for use on, and in conjunction with, the specified project. None of such ideas, designs, arrangements or plans shall be used by, or disclosed to any person, firm or corporation for any purpose whatsoever without the written permission of NICHOLS, MELBURG and ROSSETTO.

LICENSE STAMPS

REGISTERED PROFESSIONAL ENGINEER HARDIE E. HUNTINGTON No. S4703 STRUCTURAL STATE OF CALIFORNIA
3/19/2021

STRUCTURAL CONSULTANT

LIONAKIS
1919 Nineteenth Street
Sacramento CA 95811
P 916.558.1900 F 916.558.1919
www.lionakis.com

DRAWING STATUS
CONSTRUCTION DOCUMENTS

ISSUE

No.	Date	Description
1	10/22/2020	INITIAL PLAN REVIEW
2	01/08/2021	AGENCY RESUBMITTAL
3	03/22/2021	AGENCY RESUBMITTAL

If drawing is not 30" x 42" it is a reduced print

PROJECT
RESIDENTIAL CENTER, UKIAH: REPLACEMENT OF EXISTING RESIDENTIAL CENTER
440 EAST HILL ROAD
WILLITS, CALIFORNIA 95490
MENDOCINO COUNTY
CALIFORNIA CONSERVATION CORP

Supervisor	Designed	Drawn
		Author

DSA Application No.
02-118630

SHEET TITLE
RECREATION STRUCTURAL BUILDING SECTIONS

DGS Project Number	Lionakis Project Number
00000000001826	018322

Reference North: NORTH
Sheet Scale: 1/8" = 1'-0"
Sheet Number: S401R

KEY PLAN

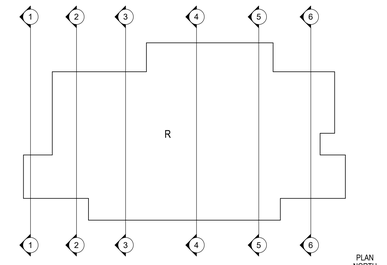

ISSUE DATE
July 9, 2021

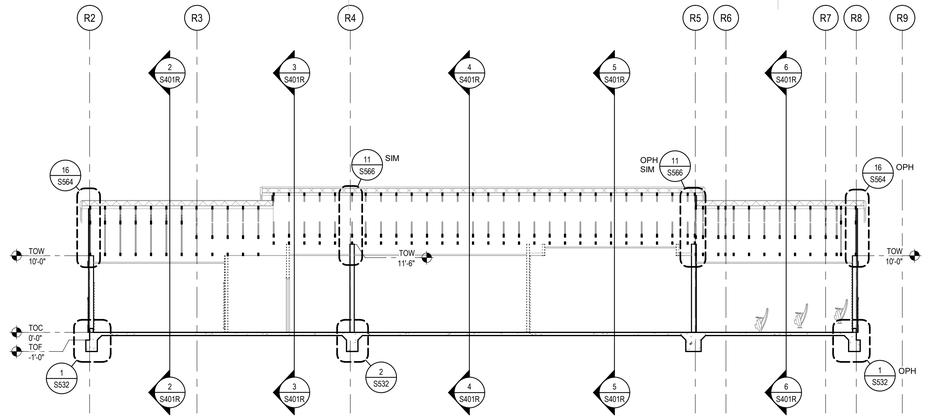

1 BLDG R - BUILDING SECTION

SCALE 1/8" = 1'-0"

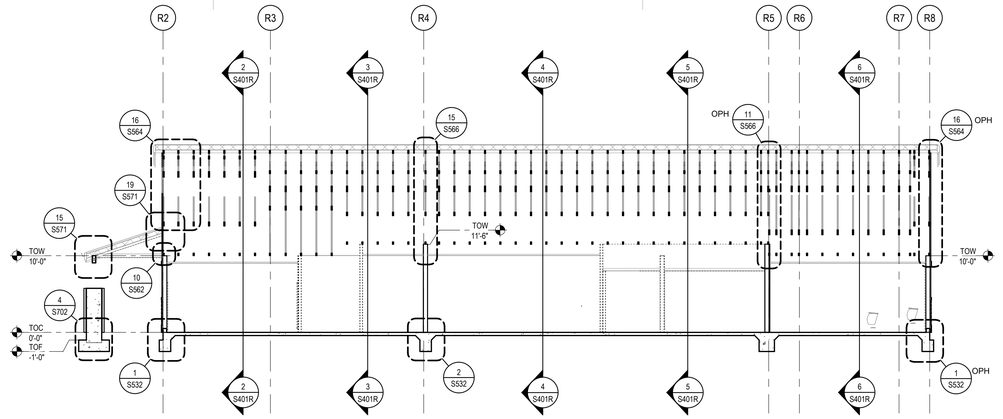

2 BLDG R - BUILDING SECTION

SCALE 1/8" = 1'-0"

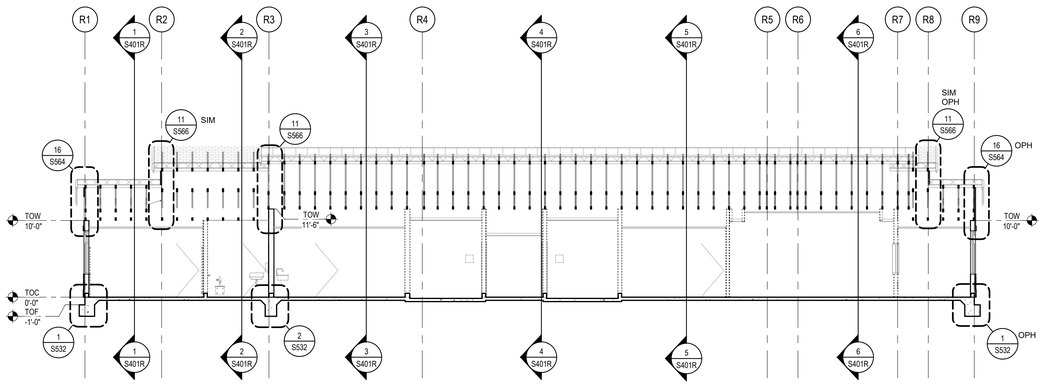

3 BLDG R - BUILDING SECTION

SCALE 1/8" = 1'-0"

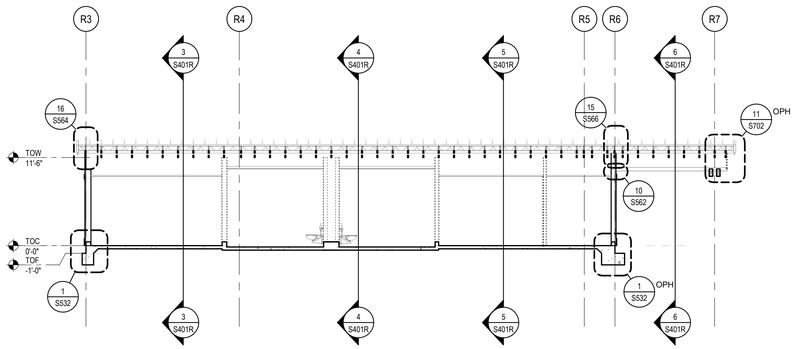

4 BLDG R - BUILDING SECTION

SCALE 1/8" = 1'-0"

IDENTIFICATION STAMP
DIV. OF THE STATE ARCHITECT
APP: 02-118630 INC:
REVIEWED FOR
SS ☐ FLS ☐ ACS ☑
DATE: 04/13/2021

OFFICE OF THE STATE FIRE MARSHAL
APPROVED FIRE AND PANIC ONLY
Approval of this plan does not authorize or approve any omission or deviation from applicable regulations. Final approval is subject to field inspection. One set of approved plans shall be available on the project site at all times.
PERMIT NO. 20-N-2332-CP
REVIEWED BY: LEO CATAYLO, OSFM
DATE: 4 / /2021

GENERAL SERVICES
Department of General Services
State of California
Real Estate Services Division
Project Management & Development Branch
707 Third Street, Suite 4-105
West Sacramento, California 95605

NICHOLS MELBURG & ROSSETTO
ARCHITECTS + ENGINEERS
300 Knollcrest Drive
Redding, CA. 96002
(530) 222-3300 (530) 222-3538 FAX
http://www.nmrdesign.com

Copyright © 2021
All ideas, designs, arrangements and plans indicated or represented by this drawing are owned by, and the property of, NICHOLS, MELBURG and ROSSETTO and were created, evolved and developed for use on, and in conjunction with, the specified project. None of such ideas, designs, arrangements or plans shall be used by, or disclosed to any person, firm or corporation for any purpose whatsoever without the written permission of NICHOLS, MELBURG and ROSSETTO.

LICENSE STAMPS

REGISTERED PROFESSIONAL ENGINEER
HARDIN E. HUNTINGTON
No. S4709
STRUCTURAL
STATE OF CALIFORNIA
3/19/2021

STRUCTURAL CONSULTANT

LIONAKIS

1919 Nineteenth Street
Sacramento CA 95811
P 916.558.1900 F 916.558.1919
www.lionakis.com

DRAWING STATUS
CONSTRUCTION DOCUMENTS

ISSUE

No.	Date	Description
1	10/22/2020	INITIAL PLAN REVIEW
2	01/08/2021	AGENCY RESUBMITTAL
3	03/22/2021	AGENCY RESUBMITTAL

If drawing is not 30" x 42" it is a reduced print

PROJECT
RESIDENTIAL CENTER, UKIAH: REPLACEMENT OF EXISTING RESIDENTIAL CENTER
440 EAST HILL ROAD
WILLITS, CALIFORNIA 95490
MENDOCINO COUNTY
CALIFORNIA CONSERVATION CORP

Supervisor	Designed	Drawn
		Author

DSA Application No.
02-118630

SHEET TITLE
RECREATION STRUCTURAL BUILDING SECTIONS

DGS Project Number: 00000000001826
Lionakis Project Number: 018322

Reference North: NORTH
Sheet Scale: 1/8" = 1'-0"
Sheet Number: S402R

ISSUE DATE
July 9, 2021

KEY PLAN

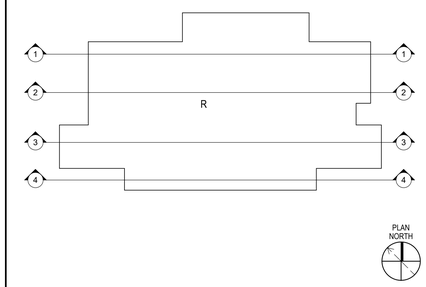

Plot Date: 3/19/2021 11:24:07 AM
File Name: BIM 360://CCC Willits Residential Center/018322_S-MASTER_R18_CENTRAL.rvt

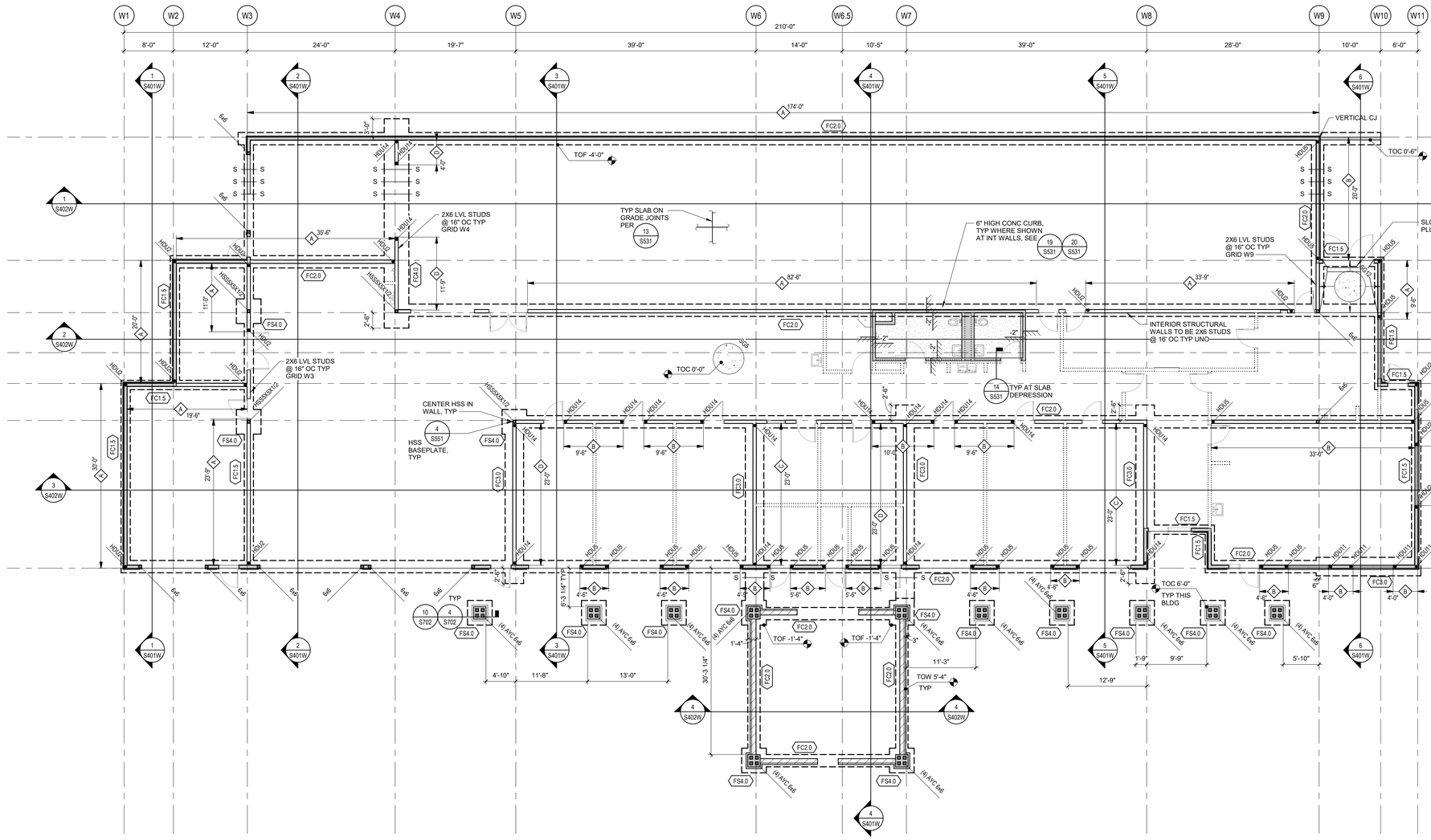

1 WAREHOUSE BUILDING FLOOR PLAN

SCALE 1/8" = 1'-0"

PLAN NORTH

SHEAR WALL SCHEDULE

S: 060600_N001A
170126. Q2

WALL MARK	SP EDGE NAILING	SILL PLATE THICKNESS	STUDS OR BLKG AT PANEL EDGES	SILL PLATE ANCHORAGE		STRUCTURAL PANEL 15/32" STRUCT I
				AB'S TO CONC	NAILS TO WOOD FRAMING	
A	8D @ 6" OC	2X	2X	5/8" DIA @ 48" OC	16D @ 6" OC	ONE SIDE
B	8D @ 4" OC	3X	3X	5/8" DIA @ 40" OC	SEE SECTIONS AND DETAILS	ONE SIDE
C	8D @ 3" OC	3X	3X	5/8" DIA @ 32" OC		ONE SIDE
D	8D @ 2" OC	3X	3X	5/8" DIA @ 24" OC		ONE SIDE
E	8D @ 4" OC	3X	3X	5/8" DIA @ 16" OC		BOTH SIDES
F	8D @ 3" OC	3X	3X	5/8" DIA @ 8" OC		BOTH SIDES
G	10D @ 2" OC	3X	3X	5/8" DIA @ 8" OC		BOTH SIDES

1. SEE 18/S563 FOR TYP SHEAR WALL SP LAYOUT.
2. EDGE NAILING OCCURS AT EVERY PANEL EDGE. FIELD NAILING SHALL BE 8D @ 12" OC, EXCEPT AT TYPE G FIELD NAILING SHALL BE 10D @ 12" OC.
3. NAILS SHALL BE STEEL WIRE COMMON TYPE OF THE SIZES DENOTED. DRIVE STRUCTURAL PANEL NAILS SO THAT THE NAIL HEADS ARE FLUSH WITH THE SURFACE OF THE PANEL. DO NOT OVERDRIVE NAILS. STAGGER NAILS AT EACH SIDE OF JOINTS.
4. STRUCTURAL PANELS SHALL HAVE A PANEL SPAN RATING OF 32/16. OSB OR 5-PLY/5-LAYER PLYWOOD.
5. BLOCK PANEL EDGES WITH FULL STUD WIDTH BLOCKING OF THICKNESS SPECIFIED.
6. SILL PLATE NAILING IS TO PARALLEL FRAMING BELOW (WHETHER BLKG OR CONT). PROVIDE (2) ADDITIONAL NAILS OF SIZE SHOWN TO EA PERPENDICULAR FRAMING BELOW.
7. PREDRILL NAIL HOLES IF SPLITTING OCCURS. STAGGER NAILING TO PREVENT SPLITTING.
8. WHERE STRUCTURAL PANELS OCCUR AT BOTH SIDES OF WALL, STAGGER PANEL JOINTS AT EACH FACE SO THEY DO NOT FALL ON THE SAME STUD OR BLOCKING.
9. FA SPACING AT SHEAR WALLS SHALL BE 3X THE EDGE NAIL SPACING FOR ONE-SIDED SHEAR WALLS, AND 6" OC FOR WALLS WITH STRUCTURAL PANELS ON BOTH SIDES.
10. PROVIDE STRUCTURAL PANELS FULL LENGTH AND HEIGHT OF ALL EXTERIOR WALLS AND AT INTERIOR WALLS AS SHOWN ON SECTIONS AND DETAILS. MINIMUM STRUCTURAL PANEL NAILING SHALL BE TYPE A UNO. SEE PLANS FOR HEAVIER NAILING LOCATIONS NOTED BY WALL MARKS THUS:

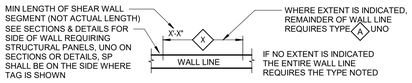

NOTES

170828. Q2

1. SEE S-000 SERIES SHEETS FOR GENERAL NOTES & S-500 SERIES SHEETS FOR TYPICAL DETAILS.
2. SEE S-200 SERIES SHEETS FOR WALL & FRAMING ELEVATIONS.
3. DIMENSIONS ARE TO FOS OR CENTERLINE OF COLUMNS/POSTS, UNO. SEE SECTIONS & DETAILS FOR FOC LOCATIONS RELATIVE TO FOS.
4. SEE ARCH & OTHER CONSULTANT DWGS FOR DIMENSIONS & LOCATIONS OF WALL OPENINGS.
5. SEE ARCH DWGS FOR DIMENSIONS OF SLAB DEPRESSIONS & SLOPED SLABS.
6. SEE ARCH & OTHER CONSULTANT DWGS FOR FLOOR PENETRATIONS NOT SHOWN. SAWCUT OR CORE DRILL CLEAN HOLES WITH NO OVERCUTTING. COMPLY WITH TYPICAL DETAILS.
7. SEE CIVIL DRAWINGS AND SPECIFICATIONS FOR ENGINEERED FILL.
8. EXTERIOR CONCRETE FLATWORK IS NOT SHOWN, SEE CIVIL & ARCH DWGS.
9. CONTINUOUS WALL FOOTINGS TO BE CENTERED UNDER WALLS AND PAD FOOTINGS TO BE CENTERED UNDER COLUMNS, TYP UNO.
10. TOP OF FOOTINGS SHALL BE 1'-0" BELOW FINISHED FLOOR (TOF -1'-0"), TYP UNO. SEE ARCH & OTHER CONSULTANT DRAWINGS FOR UTILITIES THAT WILL AFFECT FOOTINGS AND COMPLY WITH TYPICAL DETAILS.
11. CONTINUOUS FOOTINGS ARE FC1.5, TYP UNO. SEE SCHEDULE FOR CONTINUOUS FOOTING SIZE & REINF.
12. CONCRETE SLAB OVER SUB BASE SHALL BE SG5, TYP UNO. SEE SCHEDULE FOR MORE INFORMATION..
13. EXTERIOR WALLS ARE 2x6 STUDS @ 16" OC, TYP UNO.
14. TOC = 100'-0" TYP UNO (DATUM ELEV TOC = ___, SEE CIVIL DRAWINGS).

SCHEDULES

DECK SCHEDULE

TYPE	DESCRIPTION
SG5	5" CONC W/ #4 @ 16" OC EA WAY CENTERED IN SLAB O/ VAPOR RETARDER O/ 4" FREE DRAINING CRUSHED ROCK
SG12	12" CONC W/ #4 @ 16" OC T&B EA WAY O/ VAPOR RETARDER O/ 4" FREE DRAINING CRUSHED ROCK

CONTINUOUS FOOTING SCHEDULE

TYPE	WIDTH	DEPTH	REINFORCEMENT
FC1.5	1'-6"	1'-6"	(2) CONT #5 T&B
FC2.0	2'-0"	1'-6"	(3) CONT #5 T&B
FC3.0	3'-0"	1'-6"	(4) CONT #5 T&B AND #4 TIES @ 18" OC
FC3.1	3'-0"	2'-0"	(4) CONT #5 T&B AND #4 TIES @ 18" OC
FC4.0	4'-0"	1'-6"	(5) CONT #5 T&B AND #4 TIES @ 18" OC
FC4.1	4'-0"	2'-0"	(5) CONT #5 T&B AND #4 TIES @ 18" OC

SPREAD FOOTING SCHEDULE

TYPE	SIZE	DEPTH	REINFORCEMENT
FS2.0	2'-0"x2'-0"	1'-6"	(3) #5 EW AT BOT
FS3.0	3'-0"x3'-0"	1'-6"	(4) #5 EW AT BOT
FS4.0	4'-0"x4'-0"	1'-6"	(5) #5 EW AT BOT
FS4.1	4'-0"x4'-0"	2'-0"	(7) #5 EW AT BOT
FS5.0	5'-0"x5'-0"	1'-6"	(7) #5 EW AT BOT
FS5.1	5'-0"x5'-0"	2'-0"	(9) #5 EW AT BOT
FS6.1	6'-0"x4'-0"	1'-6"	#5 @ 12" OC EW AT BOT
FS7.1	7'-0"x7'-0"	2'-0"	(9) #6 EW AT BOT

WALL SCHEDULE

TYPE	DESCRIPTION
WM8	8" CMU WALLS W/ #5 @ 16" OC VERT AND #4 @ 16" OC HORIZ

LEGEND

170828. Q1

- (E) ELEMENTS SHOWN FADED - LINETYPE AND PATTERN/HATCHING AS NOTED FOR NEW CONSTRUCTION
- STRUCTURAL WALL
- NON-STRUCTURAL WALL, SAD
- CMU WALL
- CONCRETE CURB OR PAD
- DEPRESSED SLAB AREA
- SAD FOR EXTENTS
- SLAB STEP SYMBOL
- ELEVATION RELATIVE TO TOC
- CONC SLAB / STEEL DECK TYPE AND SPAN DIRECTION
- COL SIZE — COLUMN WITH CALLOUT
- HD SIZE / POST SIZE — HOLDOWN & REQUIRED POST
- A — SHEAR WALL TYPE, SEE "SHEAR WALL SCHEDULE"
- FCX.X — CONTINUOUS FOOTING TAG
- FSX.X — SPREAD FOOTING TAG
- FOOTING
- S — S — STEPPED FOOTING

KEY PLAN

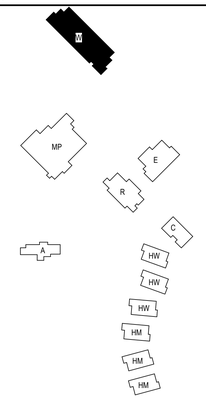

IDENTIFICATION STAMP
DIV. OF THE STATE ARCHITECT
APP: 02-118630 INC:
REVIEWED FOR
SS ☐ FLS ☐ ACS ☑
DATE: 04/13/2021

OFFICE OF THE STATE FIRE MARSHAL
APPROVED FIRE AND PANIC ONLY
Approval of this plan does not authorize or approve any omission or deviation from applicable regulations. Final approval is subject to field inspection. One set of approved plans shall be available on the project site at all times.
PERMIT NO. 20-N-2332-CP
REVIEWED BY: LEO CATAYLO, OSFM
DATE: 4 / /2021

DGS GENERAL SERVICES
Department of General Services
State of California
Real Estate Services Division
Project Management & Development Branch
707 Third Street, Suite 4-105
West Sacramento, California 95605

NICHOLS MELBURG & ROSSETTO ARCHITECTS + ENGINEERS
300 Knollcrest Drive
Redding, CA. 96002
(530) 222-3300 (530) 222-3538 FAX
http://www.nmrdesign.com

Copyright © 2021
All ideas, designs, arrangements and plans indicated or represented by this drawing are owned by, and the property of, NICHOLS, MELBURG and ROSSETTO and were created, evolved and developed for use on, and in conjunction with, the specified project. None of such ideas, designs, arrangements or plans shall be used by, or disclosed to any person, firm or corporation for any purpose whatsoever without the written permission of NICHOLS, MELBURG and ROSSETTO.

LICENSE STAMPS

REGISTERED PROFESSIONAL ENGINEER — HAROLD E. HUNTINGTON — No. S4709 — STRUCTURAL — STATE OF CALIFORNIA
3/19/2021

STRUCTURAL CONSULTANT

LIONAKIS
1919 Nineteenth Street
Sacramento CA 95811
P 916.558.1900 F 916.558.1919
www.lionakis.com

DRAWING STATUS
CONSTRUCTION DOCUMENTS

ISSUE

No.	Date	Description
1	10/22/2020	INITIAL PLAN REVIEW
2	01/08/2021	AGENCY RESUBMITTAL
3	03/22/2021	AGENCY RESUBMITTAL

If drawing is not 30" x 42" it is a reduced print

PROJECT
RESIDENTIAL CENTER, UKIAH: REPLACEMENT OF EXISTING RESIDENTIAL CENTER
440 EAST HILL ROAD
WILLITS, CALIFORNIA 95490
MENDOCINO COUNTY
CALIFORNIA CONSERVATION CORP

Supervisor	Designed	Drawn
		Author

DSA Application No.
02-118630

SHEET TITLE
WAREHOUSE FOUNDATION PLAN

DGS Project Number: 000000000001826
Lionakis Project Number: 018322

Reference North: NORTH
Sheet Scale: As indicated
Sheet Number: S201W

ISSUE DATE
July 9, 2021

Plot Date: 3/19/2021 11:20:14 AM
File Name: BIM 360://CCC Willis Residential Center/018322_S-MASTER_R18_CENTRAL.rvt

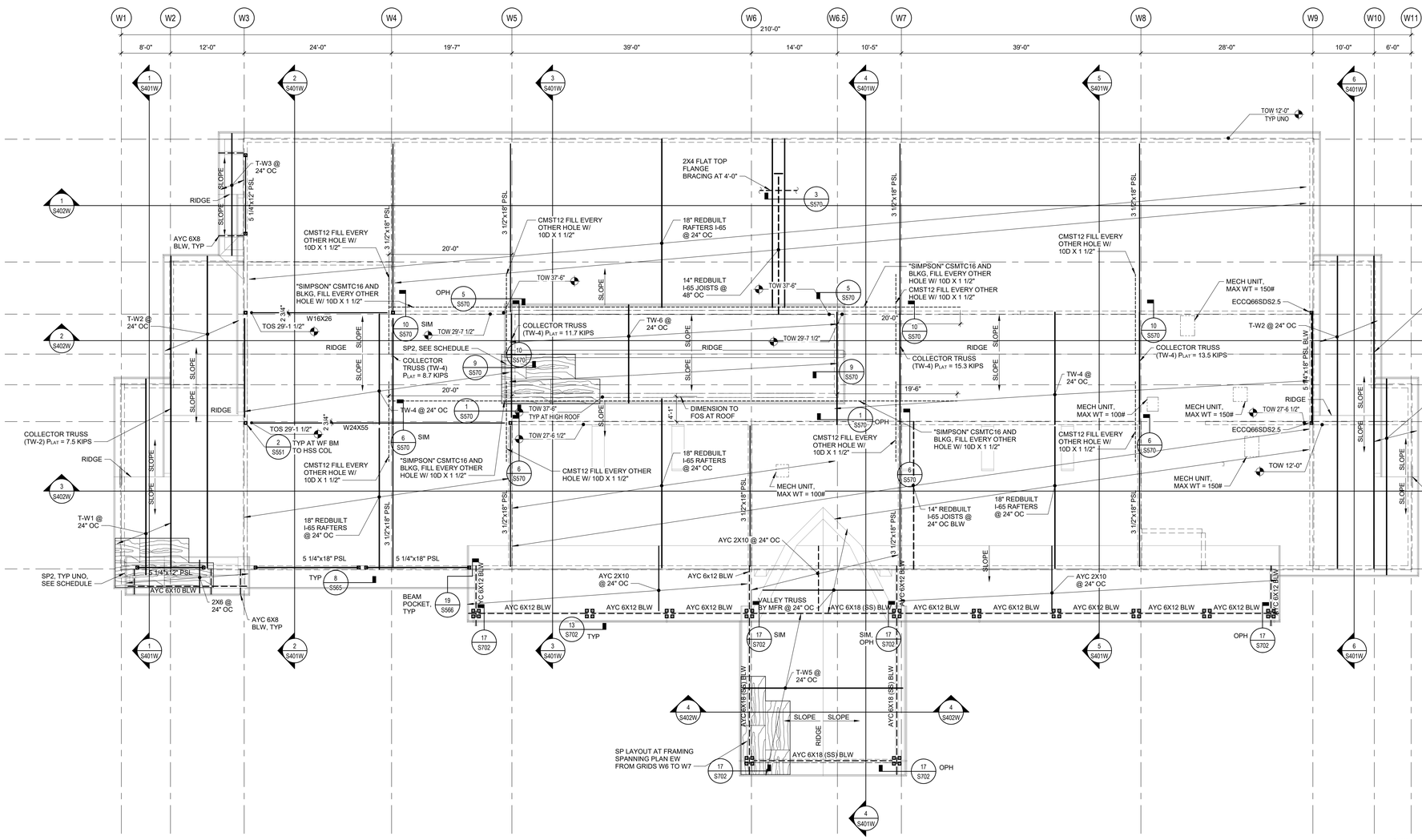

1 WAREHOUSE BUILDING ROOF FRAMING PLAN

SCALE 1/8" = 1'-0"

PLAN NORTH

NOTES

S- 010000_N001A
170828. Q2

1. SEE S-000 SERIES SHEETS FOR GENERAL NOTES & S-500 SERIES SHEETS FOR TYPICAL DETAILS.
2. SEE S-200 SERIES SHEETS FOR WALL & FRAMING ELEVATIONS.
3. DIMENSIONS ARE TO FOS OR CENTERLINE OF COLUMNS/POSTS, UNO.
4. SEE ARCH & OTHER CONSULTANT DWGS FOR DIMENSIONS & LOCATIONS OF WALL OPENINGS. SEE TYPICAL DETAILS FOR FRAMING AT OPENINGS.
5. SEE ARCH & OTHER CONSULTANT DWGS FOR ROOF PENETRATIONS NOT SHOWN. PROVIDE FRAMING AROUND OPENINGS PER TYPICAL DETAILS. SAWCUT OR CORE DRILL CLEAN HOLES WITH NO OVERCUTTING. CONFORM WITH TYPICAL DETAILS.
6. SEE ARCH DWGS FOR DIMENSIONS OF ROOF OVERHANGS, UNO.
7. EXTERIOR WALLS ARE 2x6 STUDS @ 16" OC, TYP UNO.
8. PROVIDE STRUCTURAL PANEL EDGE NAILING TO THE FULL LENGTH OF ALL PSL's, AND MANUFACTURED TRUSSES, I-JOISTS, RIM JOISTS AND BLOCKING AT SHEAR WALLS. SEE PLANS FOR LOCATIONS WHERE DOUBLE ROWS OF EDGE NAILING OCCUR.
9. CAMBER IN GLU-LAM BEAMS SHALL BE 1600' RADIUS, TYP UNO.
10. SEE S-000 SHEETS FOR MANUFACTURED ROOF TRUSS DESIGN CRITERIA.

SP NAILING SCHEDULE

S- 061100_N001A
170828. Q2

WOOD STRUCTURAL PANEL NAILING SCHEDULE (UNO)	
- PROVIDE 1/8" SPACE BETWEEN SHEETS FOR ALL SP SHEATHING. - MIN SHEET WIDTH SHALL BE 24" FOR ROOF & FLOOR, 12" FOR WALLS. - SEE 17/S563 FOR TYP STRUCTURAL PANEL LAYOUT.	
SP2 - 19/32" STRUCT I SP, APA SPAN RATED 40/20 ARRANGE SHEETS AS SHOWN ON ROOF FRAMING PLAN	
EN AT PERIMETER OF EA SHEET	8D @ 6" OC
FN AT INTERIOR CONTACTS OF EA SHEET	8D @ 12" OC
BN AT PERIMETER OF ROOF	8D @ 6" OC
SIDE JOINTS TO BE BLOCKED PER 17/S563.	

TRUSS SCHEDULE

DESIGNATION	TRUSS CONFIGURATION	DESIGNATION	TRUSS CONFIGURATION
T-W1	WA, WC; 12/8, 12/8; AS REQ TO ALIGN W/ SP BTWN GRIDS W3 & W9; VENT AT GABLE END WHERE OCCURS, SAD, COORDINATE TRUSS WEBS AS REQ	T-W4	WB, WD; 12/8, 12/8; COLLECTOR TRUSS PLAT = SEE PLAN; VENT AT GABLE END WHERE OCCURS, SAD, COORDINATE TRUSS WEBS AS REQ
T-W2	WA, WE; 12/8, 12/8; AS REQ TO ALIGN W/ SP BTWN GRIDS W3 & W9; COLLECTOR TRUSS PLAT = SEE PLAN; VENT AT GABLE END WHERE OCCURS, SAD, COORDINATE TRUSS WEBS AS REQ; CAP TRUSS AS REQ, SEE 6/S564	T-W5	W6, W7; 12/8, 12/8; BEAM, SEE PLAN
T-W3	WE, WF; 12/8, 12/8; BEAM, SEE PLAN	T-W6	WB, WD; 12/8, 12/8; SEE PLAN

NOTES:
1. TRUSS CONFIGURATIONS SHOWN ARE A DIAGRAMATIC OUTLINE INDICATING BEARING SUPPORTS. TRUSS WEB MEMBERS ARE NOT SHOWN AND MAY VARY BETWEEN TRUSS MANUFACTURERS.
2. REFER TO "METAL-PLATE WOOD TRUSSES" NOTES ON SHEET S012 FOR TRUSS DESIGN AND DETAILING REQUIREMENTS.
3. MANUFACTURED ROOF TRUSS LOADS AS SHOWN ON PLAN ARE UNFACTORED DESIGN LOADS. WIND AND SEISMIC LOADS ARE LRFD DESIGN LEVEL FORCES. LOADS SHOWN ON PLAN ARE IN ADDITION TO THE TRUSS DESIGN/LOADING AND DETAILING REQUIREMENTS ON SHEET S012.
4. BEARING POINTS ARE SHOWN AT GRIDS. SEE DETAILS FOR FACE OF STUD RELATIVE TO BEARING LENGTH AND LOCATION. SEE DETAILS FOR WHERE LEDGERS, TRUSS HANGERS OR BEAMS ARE USED AS BEARING POINTS.
5. PROVIDE DIAPHRAGM BOUNDARY NAILING PATTERN AT COLLECTOR TRUSSES, UNO.

LEGEND

180821
Q1

- (E) ELEMENTS SHOWN FADED - LINETYPE AND PATTERN/HATCHING AS NOTED FOR NEW CONSTRUCTION
- STRUCTURAL WALL, SEE 10/S561
- NON-STRUCTURAL WALL, SAD, FOR ATTACHMENT, SEE 4/S561, 10/S561
- CONCRETE CURB OR PAD
- DEPRESSED SLAB AREA
- SAD FOR EXTENTS
- SLAB STEP SYMBOL
- ELEVATION RELATIVE TO TOC
- CONC SLAB / PLYWOOD / CLT DECK (SOLID LINE INDICATED SPAN OF DIRECTION OF CLT) — SK, CA, DA
- COLUMN WITH CALLOUT — COL SIZE
- HOLDOWN & REQUIRED POST, SEE 16/S563 — HD SIZE, POST SIZE
- SHEAR WALL TYPE, SEE "SHEAR WALL SCHEDULE" — A
- BEAM SIZE — W24X55
- BEAM CAMBER — C=2"
- BEAM SPLICE — S
- TRUSS W/ SUPERIMPOSED LOADS

KEY PLAN

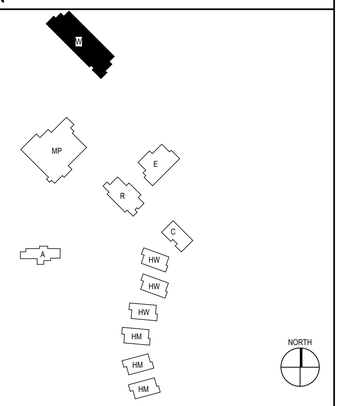

IDENTIFICATION STAMP
DIV. OF THE STATE ARCHITECT
APP: 02-118630 INC:
REVIEWED FOR
SS ☐ FLS ☐ ACS ☑
DATE: 04/13/2021

OFFICE OF THE STATE FIRE MARSHAL
APPROVED FIRE AND PANIC ONLY
Approval of this plan does not authorize or approve any omission or deviation from applicable regulations. Final approval is subject to field inspection. One set of approved plans shall be available on the project site at all times.
PERMIT NO. 20-N-2332-CP
REVIEWED BY: LEO CATAYLO, OSFM
DATE: 4 / /2021

DGS GENERAL SERVICES
Department of General Services
State of California
Real Estate Services Division
Project Management & Development Branch
707 Third Street, Suite 4-105
West Sacramento, California 95605

NICHOLS MELBURG & ROSSETTO ARCHITECTS + ENGINEERS
300 Knollcrest Drive
Redding, CA 96002
(530) 222-3300 (530) 222-3538 FAX
http://www.nmrdesign.com

Copyright © 2021
All ideas, designs, arrangements and plans indicated or represented by this drawing are owned by, and the property of, NICHOLS, MELBURG and ROSSETTO and were created, evolved and developed for use on, and in conjunction with, the specified project. None of such ideas, designs, arrangements or plans shall be used by, or disclosed to any person, firm or corporation for any purpose whatsoever without the written permission of NICHOLS, MELBURG and ROSSETTO.

LICENSE STAMPS

REGISTERED PROFESSIONAL ENGINEER — SIMONE HUNTINGTON — No. S47590 — STRUCTURAL — STATE OF CALIFORNIA
3/19/2021

STRUCTURAL CONSULTANT

LIONAKIS
1919 Nineteenth Street
Sacramento CA 95811
P 916.558.1900 F 916.558.1919
www.lionakis.com

DRAWING STATUS
CONSTRUCTION DOCUMENTS

ISSUE

No.	Date	Description
1	10/22/2020	INITIAL PLAN REVIEW
2	01/08/2021	AGENCY RESUBMITTAL
3	03/22/2021	AGENCY RESUBMITTAL

If drawing is not 30" x 42" it is a reduced print

PROJECT
RESIDENTIAL CENTER, UKIAH: REPLACEMENT OF EXISTING RESIDENTIAL CENTER
440 EAST HILL ROAD
WILLITS, CALIFORNIA 95490
MENDOCINO COUNTY
CALIFORNIA CONSERVATION CORP

Supervisor	Designed	Drawn
		Author

DSA Application No.
02-118630

SHEET TITLE
WAREHOUSE ROOF FRAMING PLAN

DGS Project Number	Lionakis Project Number
000000000001826	018322

Reference North: NORTH
Sheet Scale: As indicated
Sheet Number: S202W

ISSUE DATE
July 9, 2021

Plot Date: 3/19/2021 11:20:26 AM
File Name: BIM 360://CCC Willits Residential Center/018322_S-MASTER_R18_CENTRAL.rvt

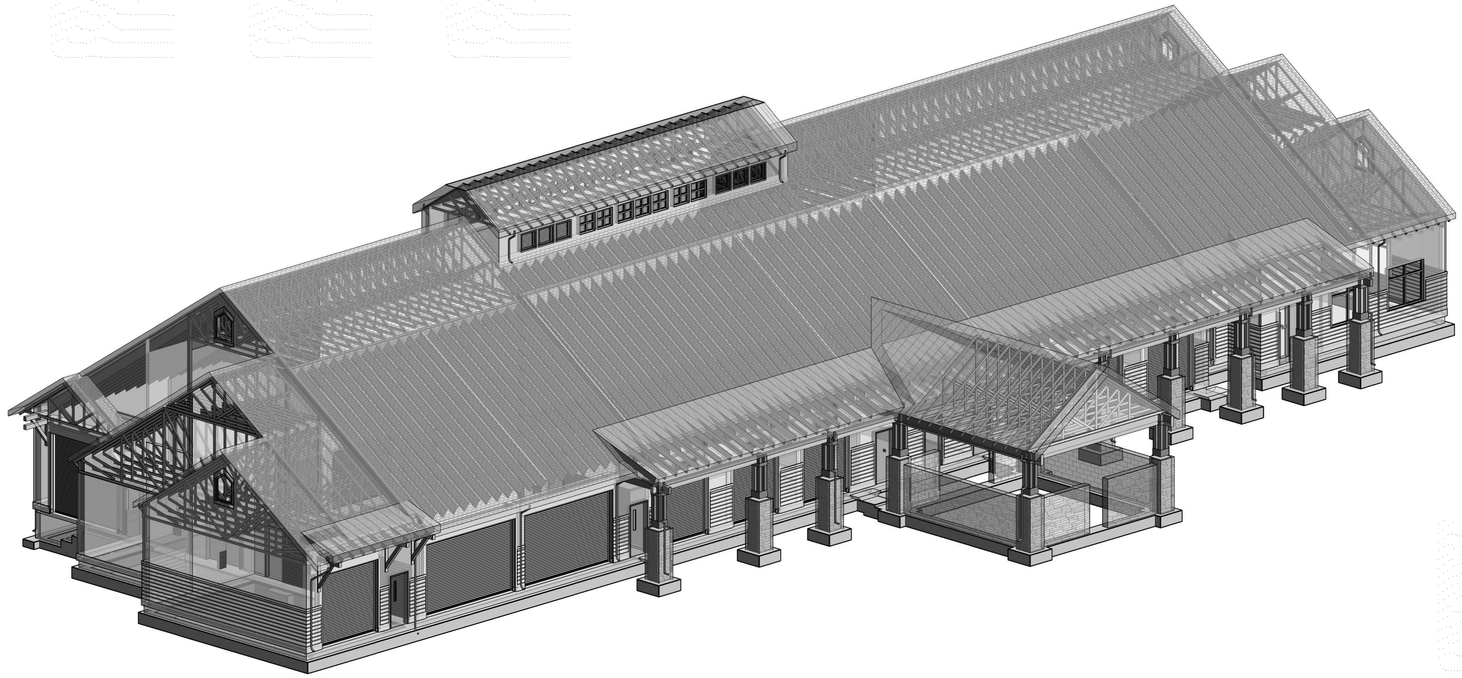

1 BUILDING W - VIEW 1
SCALE

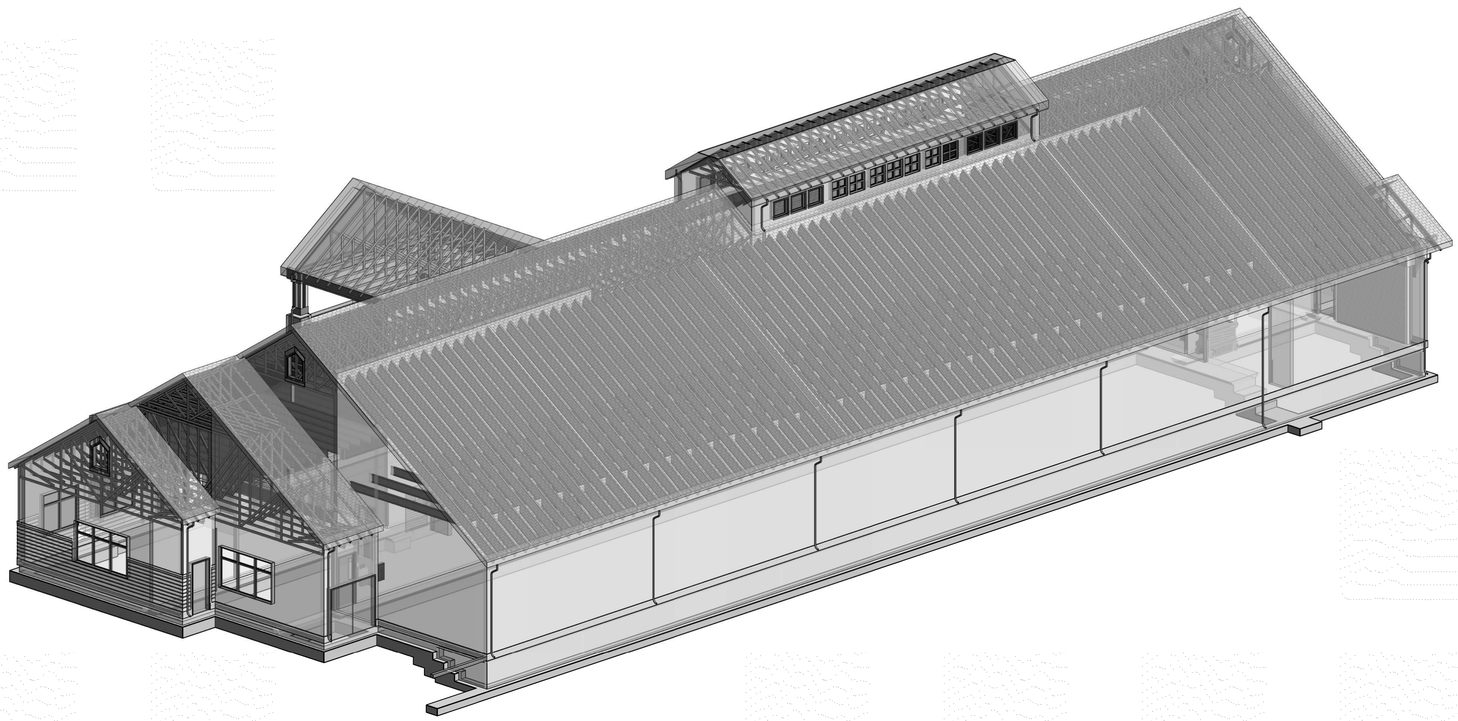

2 BUILDING W - VIEW 2
SCALE

3D VIEW NOTES

170828. Q1

1. FRAMING SHOWN IN THESE VIEWS IS FOR GENERAL INFORMATION ONLY. THE BALANCE OF STRUCTURAL DOCUMENT TAKE PRECEDENCE OVER 3D VIEWS.
2. NOT ALL FRAMING MAY BE SHOWN. SEE CONSTRUCTION DOCUMENTS FOR ADDITIONAL FRAMING MEMBERS REQUIRED.

KEY PLAN

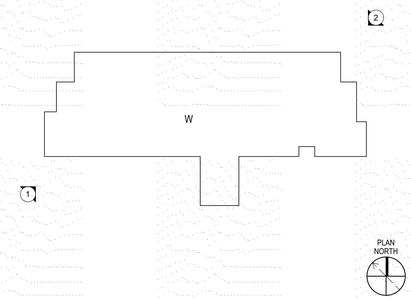

IDENTIFICATION STAMP
DIV. OF THE STATE ARCHITECT
APP: 02-118630 INC:
REVIEWED FOR
SS ☐ FLS ☐ ACS ☑
DATE: 04/13/2021

OFFICE OF THE STATE FIRE MARSHAL
APPROVED FIRE AND PANIC ONLY
Approval of this plan does not authorize or approve any omission or deviation from applicable regulations. Final approval is subject to field inspection. One set of approved plans shall be available on the project site at all times.
PERMIT NO. 20-N-2332-CP
REVIEWED BY: LEO CATAYLO, OSFM
DATE: 4 / /2021

GENERAL SERVICES
Department of General Services
State of California
Real Estate Services Division
Project Management & Development Branch
707 Third Street, Suite 4-105
West Sacramento, California 95605

NICHOLS MELBURG & ROSSETTO
ARCHITECTS + ENGINEERS
300 Knollcrest Drive
Redding, CA 96002
(530) 222-3300 (530) 222-3538 FAX
http://www.nmrdesign.com

Copyright © 2021
All ideas, designs, arrangements and plans indicated or represented by this drawing are owned by, and the property of, NICHOLS, MELBURG and ROSSETTO and were created, evolved and developed for use on, and in conjunction with, the specified project. None of such ideas, designs, arrangements or plans shall be used by, or disclosed to any person, firm or corporation for any purpose whatsoever without the written permission of NICHOLS, MELBURG and ROSSETTO.

LICENSE STAMPS

REGISTERED PROFESSIONAL ENGINEER
GEORGE E. HUNTINGFORD
No. S47599
CIVIL STRUCTURAL
STATE OF CALIFORNIA
3/19/2021

STRUCTURAL CONSULTANT

LIONAKIS
1919 Nineteenth Street
Sacramento CA 95811
P 916.558.1900 F 916.558.1919
www.lionakis.com

DRAWING STATUS
CONSTRUCTION DOCUMENTS

ISSUE

No.	Date	Description
1	10/22/2020	INITIAL PLAN REVIEW
2	01/08/2021	AGENCY RESUBMITTAL
3	03/22/2021	AGENCY RESUBMITTAL

If drawing is not 30" x 42" it is a reduced print

PROJECT
RESIDENTIAL CENTER, UKIAH: REPLACEMENT OF EXISTING RESIDENTIAL CENTER
440 EAST HILL ROAD
WILLITS, CALIFORNIA 95490
MENDOCINO COUNTY
CALIFORNIA CONSERVATION CORP

Supervisor	Designed	Drawn
		Author

DSA Application No.
02-118630

SHEET TITLE
WAREHOUSE 3D VIEWS

DGS Project Number: 00000000001826
Lionakis Project Number: 018322

Reference North: NORTH
Sheet Scale: 12" = 1'-0"

Sheet Number
S211W

ISSUE DATE
July 9, 2021

Plot Date: 3/19/2021 11:20:08 AM
File Name: BIM 360://CCC Willits Residential Center/018322_S-MASTER_R18_CENTRAL.rvt

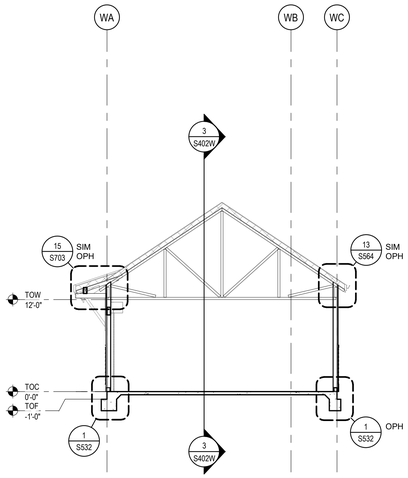

1 BLDG W - BUILDING SECTION

SCALE 1/8" = 1'-0"

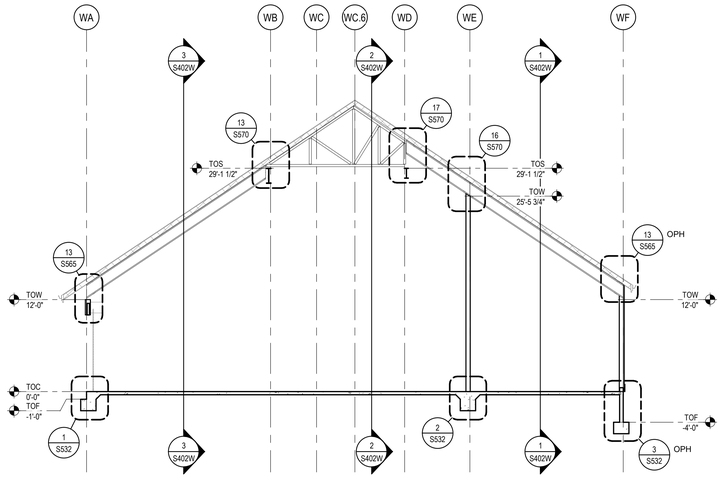

2 BLDG W - BUILDING SECTION

SCALE 1/8" = 1'-0"

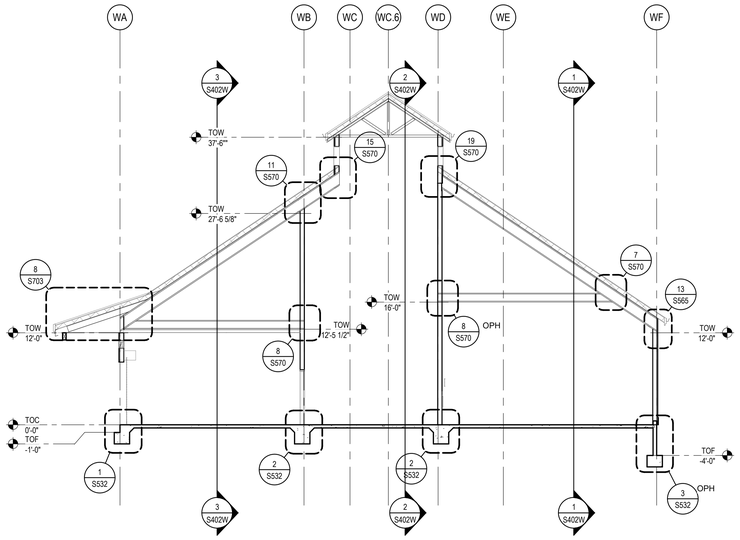

3 BLDG W - BUILDING SECTION

SCALE 1/8" = 1'-0"

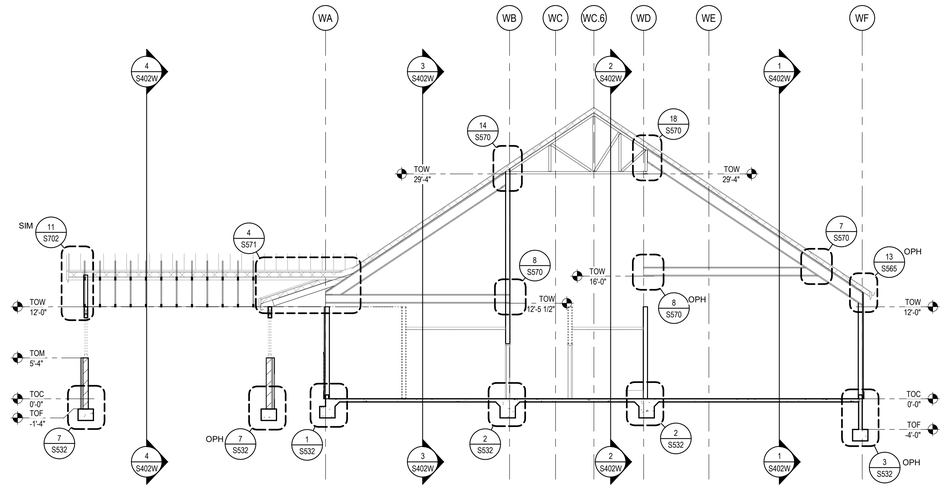

4 BLDG W - BUILDING SECTION

SCALE 1/8" = 1'-0"

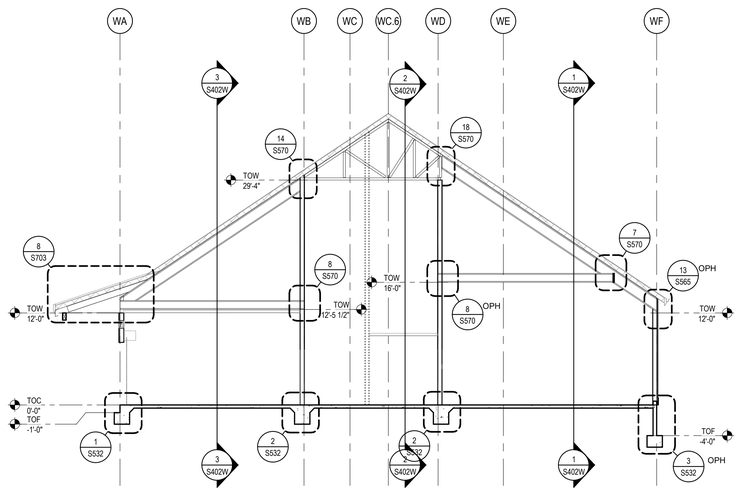

5 BLDG W - BUILDING SECTION

SCALE 1/8" = 1'-0"

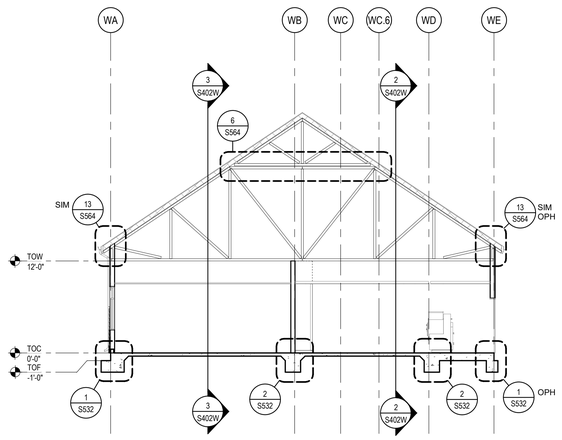

6 BLDG W - BUILDING SECTION

SCALE 1/8" = 1'-0"

KEY PLAN

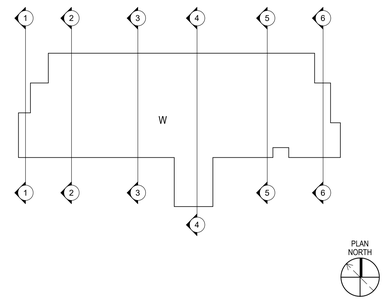

IDENTIFICATION STAMP
DIV. OF THE STATE ARCHITECT
APP: 02-118630 INC:
REVIEWED FOR
SS ☐ FLS ☐ ACS ☑
DATE: 04/13/2021

OFFICE OF THE STATE FIRE MARSHAL
APPROVED FIRE AND PANIC ONLY
Approval of this plan does not authorize or approve any omission or deviation from applicable regulations. Final approval is subject to field inspection. One set of approved plans shall be available on the project site at all times.
PERMIT NO. 20-N-2332-CP
REVIEWED BY: LEO CATAYLO, OSFM
DATE: 4 / /2021

DGS GENERAL SERVICES
Department of General Services
State of California
Real Estate Services Division
Project Management & Development Branch
707 Third Street, Suite 4-105
West Sacramento, California 95605

NICHOLS MELBURG & ROSSETTO
ARCHITECTS + ENGINEERS
300 Knollcrest Drive
Redding, CA. 96002
(530) 222-3300 (530) 222-3538 FAX
http://www.nmrdesign.com

Copyright © 2021
All ideas, designs, arrangements and plans indicated or represented by this drawing are owned by, and the property of, NICHOLS, MELBURG and ROSSETTO and were created, evolved and developed for use on, and in conjunction with, the specified project. None of such ideas, designs, arrangements or plans shall be used by, or disclosed to any person, firm or corporation for any purpose whatsoever without the written permission of NICHOLS, MELBURG and ROSSETTO.

LICENSE STAMPS

REGISTERED PROFESSIONAL ENGINEER SIMON E. HUNTINGFORD No. S47500 STRUCTURAL OF CALIFORNIA
3/19/2021

STRUCTURAL CONSULTANT

LIONAKIS
1919 Nineteenth Street
Sacramento CA 95811
P 916.558.1900 F 916.558.1919
www.lionakis.com

DRAWING STATUS
CONSTRUCTION DOCUMENTS

ISSUE

No.	Date	Description
1	10/22/2020	INITIAL PLAN REVIEW
2	01/08/2021	AGENCY RESUBMITTAL
3	03/22/2021	AGENCY RESUBMITTAL

If drawing is not 30" x 42" it is a reduced print

PROJECT
RESIDENTIAL CENTER, UKIAH: REPLACEMENT OF EXISTING RESIDENTIAL CENTER
440 EAST HILL ROAD
WILLITS, CALIFORNIA 95490
MENDOCINO COUNTY
CALIFORNIA CONSERVATION CORP

Supervisor	Designed	Drawn
		Author

DSA Application No.
02-118630

SHEET TITLE
WAREHOUSE STRUCTURAL BUILDING SECTIONS

DGS Project Number	Lionakis Project Number
000000000001826	018322

Reference North: NORTH
Sheet Scale: 1/8" = 1'-0"
Sheet Number: S401W

ISSUE DATE
July 9, 2021

Plot Date: 3/19/2021 11:29:47 AM
File Name: BIM 360://CCC Willits Residential Center/018322_S-MASTER_R18_CENTRAL.rvt

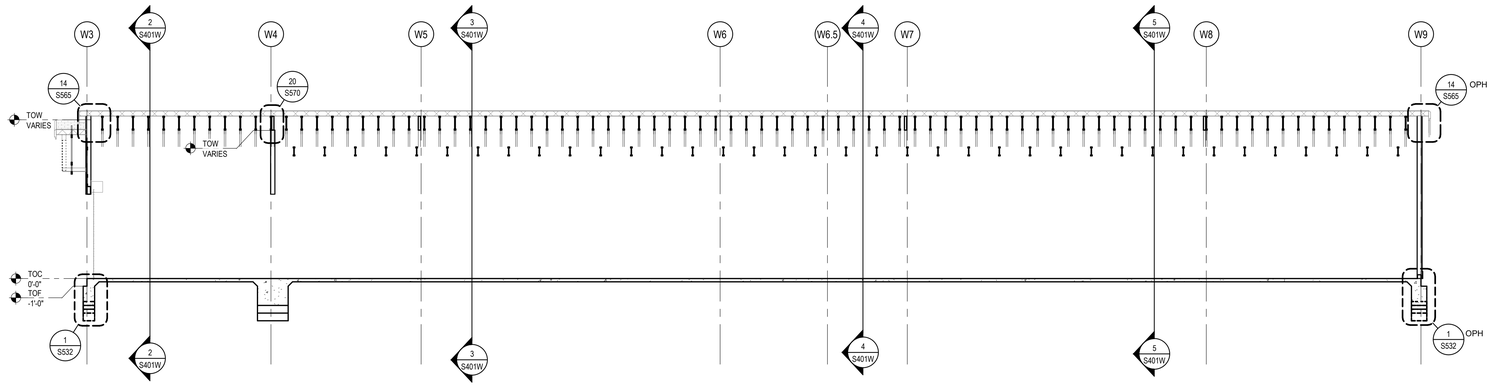

1 BLDG W - BUILDING SECTION

SCALE 1/8" = 1'-0"

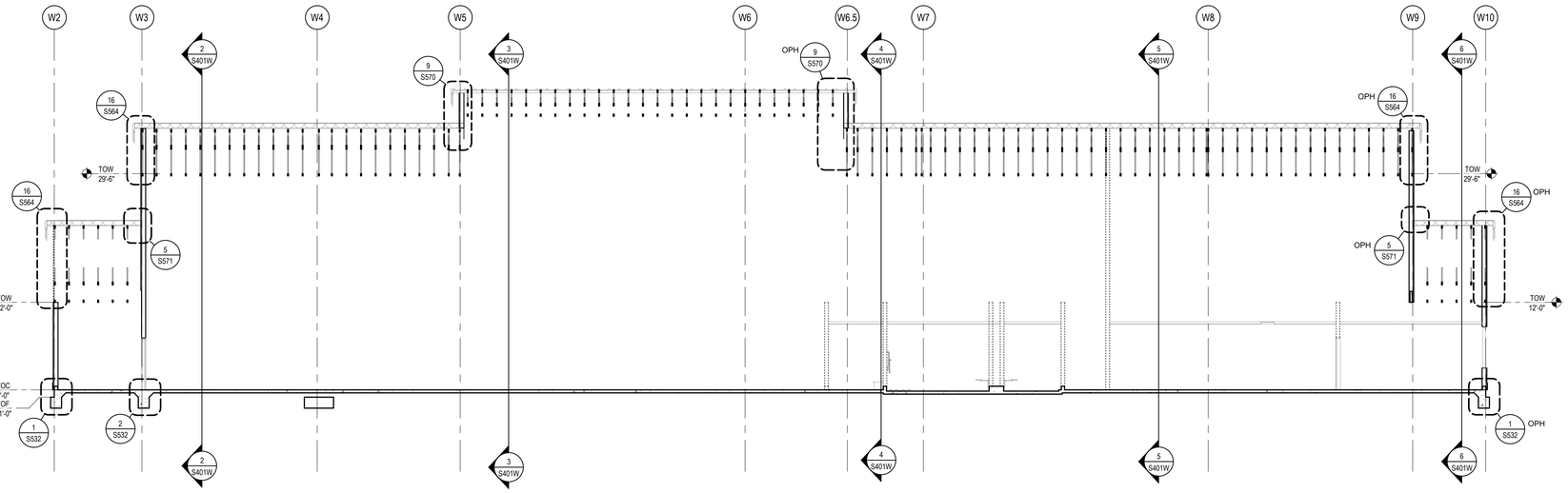

2 BLDG W - BUILDING SECTION

SCALE 1/8" = 1'-0"

4 BLDG W - BUILDING SECTION

SCALE 1/8" = 1'-0"

3 BLDG W - BUILDING SECTION

SCALE 1/8" = 1'-0"

KEY PLAN

IDENTIFICATION STAMP
DIV. OF THE STATE ARCHITECT
APP: 02-118630 INC:
REVIEWED FOR
SS ☐ FLS ☐ ACS ☑
DATE: 04/13/2021

OFFICE OF THE STATE FIRE MARSHAL
APPROVED FIRE AND PANIC ONLY
Approval of this plan does not authorize or approve any omission or deviation from applicable regulations. Final approval is subject to field inspection. One set of approved plans shall be available on the project site at all times.
PERMIT NO. 20-N-2332-CP
REVIEWED BY: LEO CATAYLO, OSFM
DATE: 4 / /2021

GENERAL SERVICES
Department of General Services
State of California
Real Estate Services Division
Project Management & Development Branch
707 Third Street, Suite 4-105
West Sacramento, California 95605

NICHOLS MELBURG & ROSSETTO
ARCHITECTS + ENGINEERS
300 Knollcrest Drive
Redding, CA. 96002
(530) 222-3300 (530) 222-3538 FAX
http://www.nmrdesign.com

Copyright © 2021
All ideas, designs, arrangements and plans indicated or represented by this drawing are owned by, and the property of, NICHOLS, MELBURG and ROSSETTO and were created, evolved and developed for use on, and in conjunction with, the specified project. None of such ideas, designs, arrangements or plans shall be used by, or disclosed to any person, firm or corporation for any purpose whatsoever without the written permission of NICHOLS, MELBURG and ROSSETTO.

LICENSE STAMPS

REGISTERED PROFESSIONAL ENGINEER
SIMONE HUNTINGTON
No. S4750
STRUCTURAL
STATE OF CALIFORNIA
3/19/2021

STRUCTURAL CONSULTANT

LIONAKIS
1919 Nineteenth Street
Sacramento CA 95811
P 916.558.1900 F 916.558.1919
www.lionakis.com

DRAWING STATUS
CONSTRUCTION DOCUMENTS

ISSUE

No.	Date	Description
1	10/22/2020	INITIAL PLAN REVIEW
2	01/08/2021	AGENCY RESUBMITTAL
3	03/22/2021	AGENCY RESUBMITTAL

If drawing is not 30" x 42" it is a reduced print

PROJECT
RESIDENTIAL CENTER, UKIAH: REPLACEMENT OF EXISTING RESIDENTIAL CENTER
440 EAST HILL ROAD
WILLITS, CALIFORNIA 95490
MENDOCINO COUNTY
CALIFORNIA CONSERVATION CORP

Supervisor	Designed	Drawn
		Author

DSA Application No.
02-118630

SHEET TITLE
WAREHOUSE STRUCTURAL BUILDING SECTIONS

DGS Project Number: 000000000001826
Lionakis Project Number: 018322

Reference North: NORTH
Sheet Scale: 1/8" = 1'-0"
Sheet Number: S402W

ISSUE DATE
July 9, 2021

Plot Date: 3/19/2021 11:24:06 AM
File Name: BIM 360://CCC Willits Residential Center/018322_S-MASTER_R18_CENTRAL.rvt

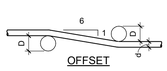

OFFSET

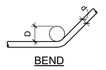

BEND

REBAR SIZE	DIA D	180 DEG HOOK		90 DEG HOOK
		W (TOL +/-)	L (TOL +/-)	W (TOL +/-)
#3	6xd	3" (1/2")	4" (1/2")	6" (1")
#4	6xd	4" (1/2")	4 1/2" (1/2")	8" (1")
#5	6xd	5" (1/2")	5" (1/2")	10" (1")
#6	6xd	6" (1/2")	6" (1/2")	12" (1")
#7	6xd	7" (1/2")	7" (1/2")	14" (1")
#8	6xd	8" (1/2")	8" (1/2")	16" (1")
#9	8xd	12" (1/2")	11" (1/2")	20" (1")
#10	8xd	13" (1/2")	12" (1/2")	22" (1")
#11	8xd	14" (1/2")	13" (1/2")	24" (1")
#14	10xd	21" (1 1/2")	17" (1 1/2")	31" (2 1/2")
#18	10xd	27" (2")	23" (2")	41" (3 1/2")

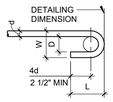

180 DEG HOOK

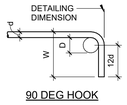

90 DEG HOOK

NOTES:
1. D = MINIMUM FINISHED INSIDE BEND DIA, d = NOMINAL REBAR DIAMETER
2. TOL = TOLERANCE (PER ACI 117)

1 TYP REBAR BENDS AND HOOKS

SCALE: NTS

S-_032000_T001A
140127

REBAR SIZE	DIA D	180 DEG HOOK		90 DEG HOOK	135 DEG HOOK	
		W (TOL +/-)	L (TOL +/-)	W (TOL +/-)	W (TOL +/-)	L (TOL +/-)
#3	4xd	2 1/4" (1/2")	3 3/4" (1/2")	3 1/2" (1")	4" (1/2")	3" (1/2")
#4	4xd	3" (1/2")	4" (1/2")	4 1/2" (1")	5" (1/2")	3" (1/2")
#5	4xd	3 3/4" (1/2")	4 1/2" (1/2")	5 3/4" (1")	6" (1/2")	4" (1/2")
#6	6xd	6" (1/2")	6" (1/2")	12" (1")	9" (1/2")	5 1/4" (1/2")
#7	6xd	7" (1/2")	7" (1/2")	14" (1")	10" (1/2")	6" (1/2")
#8	6xd	8" (1/2")	8" (1/2")	16" (1")	11" (1/2")	7" (1/2")

BEND

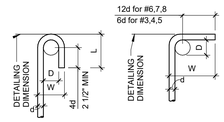

180 DEG HOOK | 90 DEG HOOK | 135 DEG HOOK

NOTES:
1. D = MINIMUM FINISHED INSIDE BEND DIA, d = NOMINAL REBAR DIAMETER
2. TOL = TOLERANCE (PER ACI 117)

2 TYP REBAR HOOP, STIRRUP, TIE HOOKS & BENDS

SCALE: NTS

S-_032000_T002A
140127

fc (psi)		#3		#4		#5		#6		#7		#8		#9		#10		#11	
		NWC	LWC	NWC	LWC	NWC	LWC	NWC	LWC	NWC	LWC	NWC	LWC	NWC	LWC	NWC	LWC	NWC	LWC
2,500	TOP	31	41	41	55	51	68	61	82	89	119	102	136	115	153	129	172	143	191
	BOT	24	32	32	42	39	52	47	63	69	91	78	104	88	118	100	133	110	147
3,000	TOP	28	38	38	50	47	62	56	75	81	108	93	124	105	140	118	157	131	175
	BOT	22	29	29	38	36	48	43	57	63	84	72	95	81	108	91	121	101	134
3,500	TOP	26	35	35	46	43	58	52	69	75	100	86	115	97	129	109	146	121	162
	BOT	20	27	27	36	33	44	40	53	58	77	66	88	75	100	84	112	93	124
4,000	TOP	25	33	33	43	41	54	49	65	71	94	81	107	91	121	102	136	114	151
	BOT	19	25	25	33	31	42	37	50	54	72	62	83	70	93	79	105	87	116
4,500	TOP	23	31	31	41	38	51	46	61	67	89	76	101	86	114	96	128	107	143
	BOT	18	24	24	32	30	39	35	47	51	68	59	78	66	88	74	99	82	110
5,000	TOP	22	29	29	39	36	48	44	58	63	84	72	96	81	108	92	122	102	135
	BOT	17	23	23	30	28	37	34	45	49	65	56	74	63	83	71	94	78	104

NOTES:
1. REINFORCING BEING LAP SPLICED MUST MEET ONE OF THE FOLLOWING CONDITIONS:
   A. CASE 1: THE CLEAR SPACING OF THE BARS BEING SPLICED IS NOT LESS THAN ONE BAR DIAMETER, CLEAR COVER IS NOT LESS THAN ONE BAR DIAMETER, AND STIRRUPS OR TIES THROUGHOUT THE SPLICE LENGTH.
   B. CASE 2: THE CLEAR SPACING OF THE BARS BEING SPLICED IS NOT LESS THAN TWO BAR DIAMETERS AND THE CLEAR COVER IS NOT LESS THAN ONE BAR DIAMETER.
   C. FOR ALL OTHER CASES, MULTIPLY THE SPLICES SHOWN BY 1.5.
2. THE ABOVE VALUES ARE FOR UNCOATED REINFORCEMENT, GRADE 60 REBAR, CLASS B.
3. TOP BARS ARE HORIZONTAL REINFORCEMENT WITH MORE THAN 12" OF NEW CONCRETE PLACED BELOW THE BAR. BOTTOM BARS ARE ALL OTHER HORIZONTAL OR VERTICAL REINFORCEMENT.

3 TYP CONCRETE REBAR LAP SPLICE LENGTHS (INCHES)

SCALE: NTS

S-_032000_T003A
150107. Q2

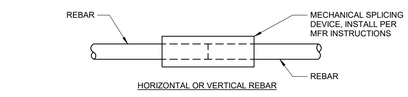

MECHANICAL SPLICES

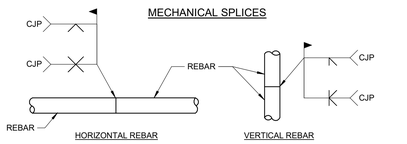

WELDED SPLICES

NOTES:
1. SPECIAL INSPECTION OF NON-LAP SPLICE FABRICATION AND INSTALLATION IS REQUIRED.
2. NON-LAP SPLICES SHALL BE CAPABLE OF DEVELOPING 125 PERCENT OF THE SPECIFIED YIELD STRENGTH OF THE REBAR IN BOTH TENSION AND COMPRESSION.
3. SUBMIT CURRENT ICC REPORT FOR MECHANICAL SPLICES FOR REVIEW PRIOR TO INSTALLATION.

4 TYP REBAR NON-LAP SPLICES

SCALE: NTS

S-_032000_T004A
140127

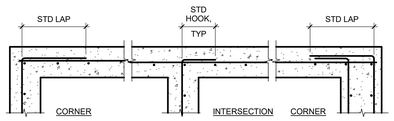

SINGLE CURTAIN

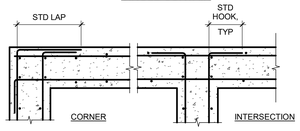

DOUBLE CURTAIN

5 TYP CONC FOOTING / WALL REINFORCING AT CORNERS AND INTERSECTIONS

SCALE: NTS

S-_033000_T002A
140127

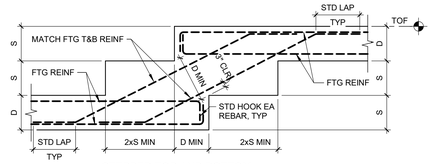

STEPPED TOP AND BOTTOM

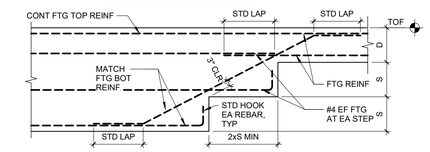

STEPPED BOTTOM

NOTES:
1. D = DEPTH FTG, S = STEP AT FTG (1'-6" MAX).
2. TWO STEPS SHOWN. SINGLE STEPS OR MULTIPLE STEPS SIMILAR.
3. SEE PLANS FOR FOOTING SIZE AND REINFORCING.
4. VERT / TIE / DOWEL REINF NOT SHOWN FOR CLARITY. PROVIDE TYP TO BOT OF FOOTING & STEP.

6 TYP STEPPED FOOTING

SCALE: NTS

S-_033000_T003A
150630

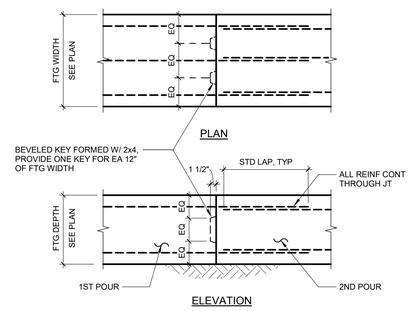

ELEVATION

7 TYP CONSTRUCTION JOINT AT GRADE BEAM/CONTINUOUS FOOTING

SCALE: NTS

S-_033000_T001A
140127

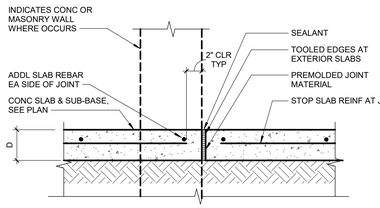

IJ - ISOLATION JOINT

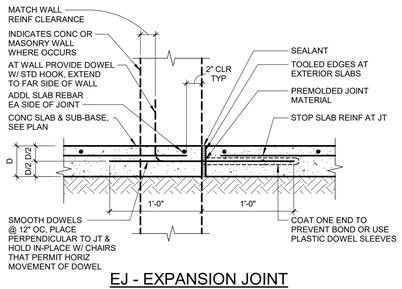

EJ - EXPANSION JOINT

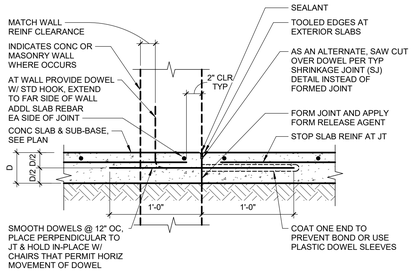

DJ - DOWEL JOINT

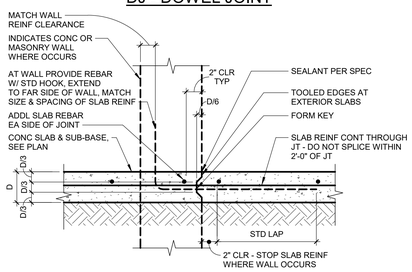

CJ - CONSTRUCTION JOINT

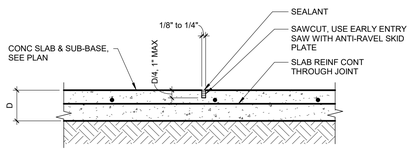

SJ - SHRINKAGE JOINT

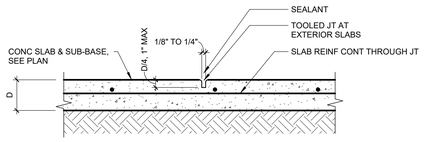

TJ - TOOL JOINT

NOTES:
1. D = DEPTH SLAB, SEE PLANS
2. SMOOTH DOWELS SHALL HAVE SAW CUT ENDS - DO NOT SHEAR. USE 1/2" DIA FOR D UP TO 4", 3/4" DIA FOR D UP TO 6", 1" DIA FOR D UP TO 8", 1 1/4" DIA FOR D UP TO 10", & 1 1/2" DIA FOR D OVER 10".
3. SAWCUTTING AND TOOLING SHALL OCCUR AS SOON AS CONCRETE IS HARD ENOUGH SO THAT IT WILL NOT BE TORN OR DAMAGED AND BEFORE INITIAL SHRINKAGE HAS STARTED.

12 TYP JOINTS AT CONC SLAB

SCALE: NTS

S-_033000_T025A
150630

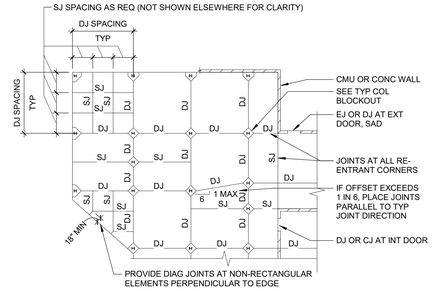

NOTES:
1. DJ SPACING TO BE 36'-0" MAX EW. ALIGN WITH COLUMN SPACING OR MODULE WHERE OCCURS.
2. SJ SPACING TO BE 12'-0" MAX EW. SPACE EQUALLY BTWN DJ'S AND SLAB EDGES.
3. PROVIDE SJ ALIGNED W/ CENTERLINE OF COLUMNS WHERE NO DJ OCCURS.
4. SEE PLANS AND DETAILS FOR CONDITION AT EDGE OF SLAB.
5. LENGTH TO WIDTH RATIO OF ANY INDIVIDUAL ELEMENT NOT TO EXCEED 1 1/2 TO 1, TYP.
6. PROVIDE JOINTS PARALLEL AND PERPENDICULAR TO BLDG COL LINES, TYP UNO.

13 TYP INT SLAB JOINT LAYOUT

SCALE: NTS

S-_033000_T024A
170517

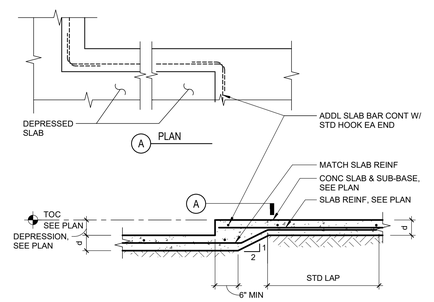

14 TYP DEPRESSION IN CONC SLAB

SCALE: NTS

S-_033000_T019A
140127

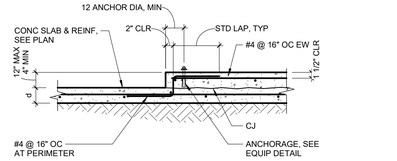

A TYP PAD, UNO

NOTE: PAD MAY BE POURED MONOLITHICALLY WITH SLAB AT CONTRACTORS OPTION

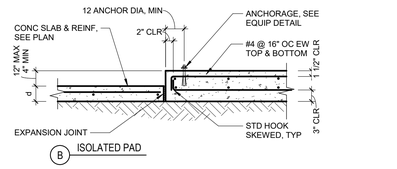

B ISOLATED PAD

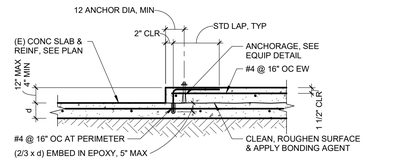

C PAD AT EXISTING SLAB

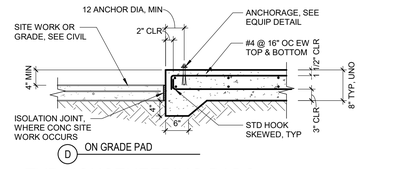

D ON GRADE PAD

16 TYP HOUSEKEEPING PADS

SCALE: NTS

S-_033000_T022A
140127

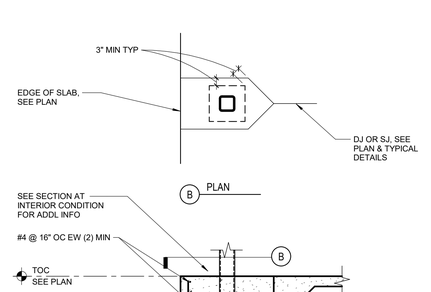

SECTION AT SLAB EDGE CONDITION

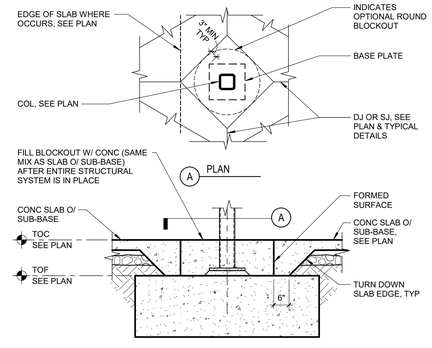

SECTION AT INTERIOR CONDITION

18 TYP COL BLOCKOUT

SCALE: NTS

S-_033000_T042A
150807. Q2

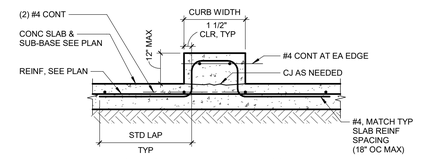

CURBS WIDER THAN 8" & LESS THAN 24"

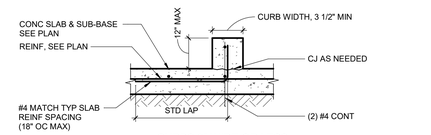

CURBS 8" WIDE OR LESS

NOTES:
1. SEE OTHER CONSTRUCTION DOCUMENTS FOR CURB LOCATIONS, DIMENSIONS, INSERTS & SHAPES.
2. SEE TYPICAL DETAILS FOR CURB DIMENSIONS RELATIVE TO STUD WALLS.
3. FOR INTERIOR NON-STRUCTURAL WALLS W/ CURBS, SEE 4 / S561

19 TYP CURB AT CONC SLAB

SCALE: NTS

S-_033000_T009A
150107. Q2

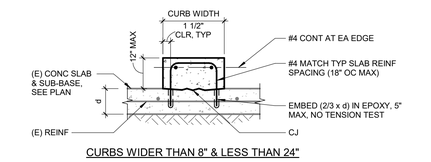

CURBS WIDER THAN 8" & LESS THAN 24"

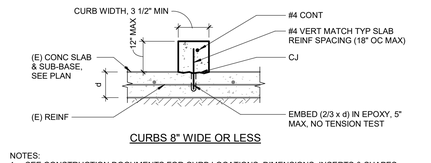

CURBS 8" WIDE OR LESS

NOTES:
1. SEE CONSTRUCTION DOCUMENTS FOR CURB LOCATIONS, DIMENSIONS, INSERTS & SHAPES.
2. SEE TYPICAL DETAILS FOR CURB DIMENSIONS RELATIVE TO STUD WALLS.
3. FOR INTERIOR NON-STRUCTURAL WALLS W/ CURBS, SEE 4 / S561

20 TYP CURB AT (E) CONC SLAB

SCALE: NTS

S-_033000_T007A
150107. Q2

IDENTIFICATION STAMP
DIV. OF THE STATE ARCHITECT
APP: 02-118630 INC:
REVIEWED FOR
SS ☐ FLS ☐ ACS ☑
DATE: 04/13/2021

OFFICE OF THE STATE FIRE MARSHAL
APPROVED FIRE AND PANIC ONLY
Approval of this plan does not authorize or approve any omission or deviation from applicable regulations. Final approval is subject to field inspection. One set of approved plans shall be available on the project site at all times.
PERMIT NO. 20-N-2332-CP
REVIEWED BY: LEO CATAYLO, OSFM
DATE: 4 / /2021

DGS GENERAL SERVICES
Department of General Services
State of California
Real Estate Services Division
Project Management & Development Branch
707 Third Street, Suite 4-105
West Sacramento, California 95605

NICHOLS MELBURG & ROSSETTO ARCHITECTS + ENGINEERS
300 Knollcrest Drive
Redding, CA 96002
(530) 222-3300 (530) 222-3538 FAX
http://www.nmrdesign.com

Copyright © 2021
All ideas, designs, arrangements and plans indicated or represented by this drawing are owned by, and the property of, NICHOLS, MELBURG and ROSSETTO and were created, evolved and developed for use on, and in conjunction with, the specified project. None of such ideas, designs, arrangements or plans shall be used by, or disclosed to any person, firm or corporation for any purpose whatsoever without the written permission of NICHOLS, MELBURG and ROSSETTO.

LICENSE STAMPS

REGISTERED PROFESSIONAL ENGINEER — JASMONE HUNTINGTON — No. S-12700 — STRUCTURAL — STATE OF CALIFORNIA
3/19/2021

STRUCTURAL CONSULTANT

LIONAKIS
1919 Nineteenth Street
Sacramento CA 95811
P 916.558.1900 F 916.558.1919
www.lionakis.com

DRAWING STATUS
CONSTRUCTION DOCUMENTS

ISSUE

No.	Date	Description
1	10/22/2020	INITIAL PLAN REVIEW
2	01/08/2021	AGENCY RESUBMITTAL
3	03/22/2021	AGENCY RESUBMITTAL

If drawing is not 30" x 42" it is a reduced print

PROJECT
RESIDENTIAL CENTER, UKIAH: REPLACEMENT OF EXISTING RESIDENTIAL CENTER
440 EAST HILL ROAD
WILLITS, CALIFORNIA 95490
MENDOCINO COUNTY
CALIFORNIA CONSERVATION CORP

Supervisor	Designed	Drawn
		Author

DSA Application No.
02-118630

SHEET TITLE
DETAILS - TYPICAL CONCRETE

DGS Project Number	Lionakis Project Number
000000000001826	018322

Reference North | Sheet Scale: As indicated | Sheet Number: S531

ISSUE DATE
July 9, 2021

Plot Date: 3/19/2021 11:24:16 AM
File Name: BIM 360://CCC Willis Residential Center/018322_S-MASTER_R18_CENTRAL.rvt

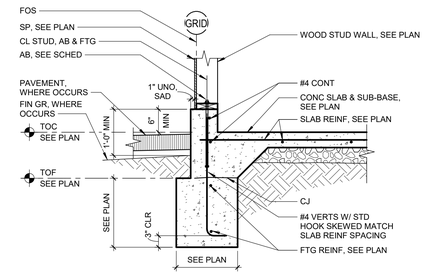

1 DETAIL

3/4" = 1'-0"

S-_033000_C021A
140127. Q2

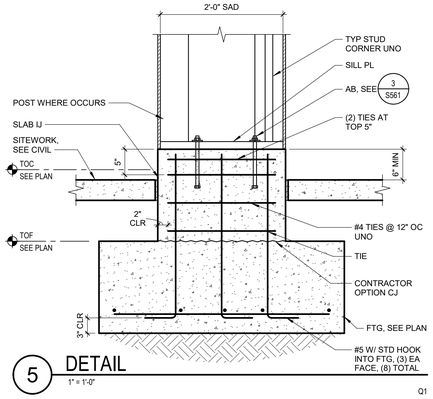

5 DETAIL

1" = 1'-0"

Q1

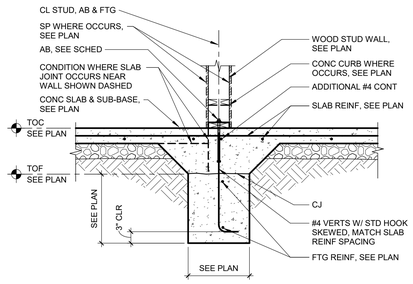

2 DETAIL

3/4" = 1'-0"

S-_033000_C030A
140127. Q2

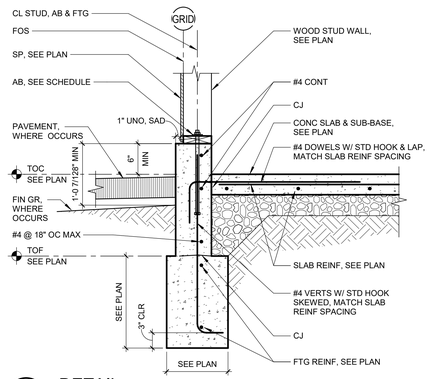

3 DETAIL

1" = 1'-0"

S-_033000_C016A
191120. Q2

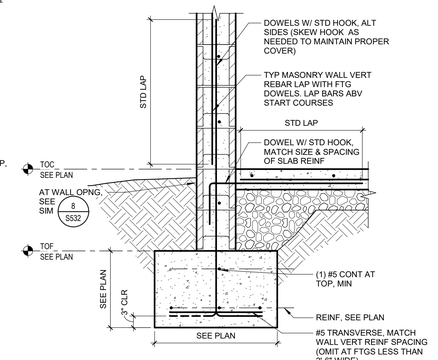

7 TYP FTG & SLAB AT EXT WM8 MASONRY WALL

1" = 1'-0"

S-_048200_T005A
160629. Q2

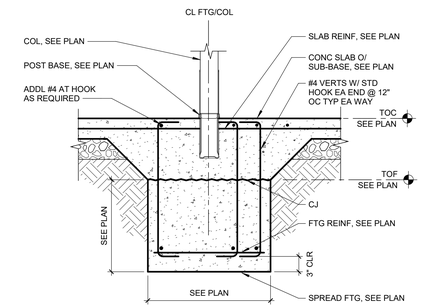

4 DETAIL

1" = 1'-0"

Q1

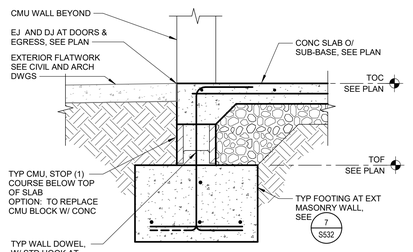

8 TYP FTG AT WM8 MASONRY EXT OPNG

1" = 1'-0"

S-_048200_T049B
190207. Q2

Plot Date: 3/19/2021 11:24:17 AM
File Name: BIM 360:\CCC Willits Residential Center\018322_S-MASTER_R18_CENTRAL.rvt

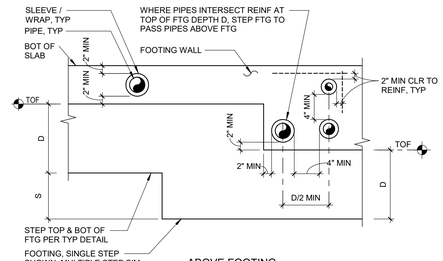

ABOVE FOOTING

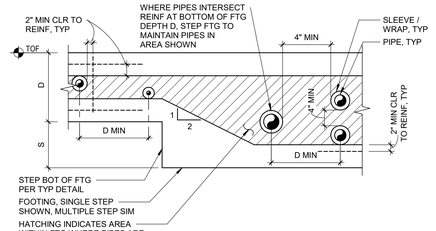

THROUGH FOOTING

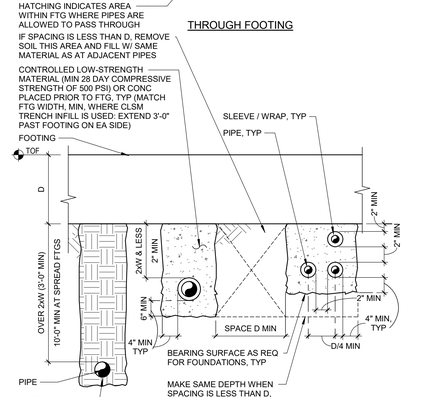

BELOW FOOTING

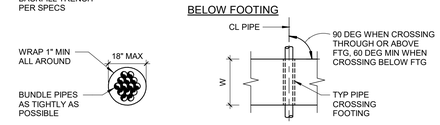

BUNDLED PIPE GROUPS PLAN

NOTES:
1. D = DEPTH FOOTING, W = WIDTH FOOTING, S = STEP AT FOOTING.
2. PIPE AS NOTED SHALL REFER TO: PIPES, DUCTS, CONDUITS, ETC. ELECTRICAL CONDUITS 1" DIA OR LESS NEED NOT BE SLEEVED / WRAPPED.
3. THIS DETAIL APPLIES AT ALL 18" DIA PIPE & SMALLER.
4. THIS DETAIL SHALL APPLY IN ALL CASES WHERE A PIPE MUST CROSS A FOOTING. COORDINATE ELEVATIONS AND LOCATIONS OF ALL PIPES & FOOTINGS ACCORDINGLY. CONTACT STRUCTURAL ENGINEER FOR CONDITIONS NOT COVERED.
5. PIPES SHALL BE SLEEVED OR WRAPPED AS SHOWN. SLEEVE INSIDE DIAMETERS SHALL BE MIN 2" (4" FOR SPRINKLER PIPES 4" & LARGER) LARGER THAN PIPE OUTSIDE DIAMETER. CENTER PIPES WITHIN SLEEVE. PIPES IN PLACE PRIOR TO PLACING CONC MAY BE WRAPPED W/ 1" (2" FOR SPRINKLER PIPES 4" & LARGER) THICK COMPRESSIBLE FOAM INSTEAD OF SLEEVE.
6. SLEEVE / WRAP SHALL EXTEND THE FULL WIDTH OF FOOTING. SEAL ENDS OF SLEEVE / WRAP AS REQUIRED TO PREVENT WATER PENETRATION.
7. MULTIPLE PIPES SHALL COMPLY WITH THE HORIZONTAL AND VERTICAL SPACING SHOWN OR BE GROUPED INTO ONE LARGE BUNDLE WITHIN THE LIMITATIONS SHOWN. MULTIPLE BUNDLED PIPE GROUPS SHALL BE SPACED 4xD MIN OC.
8. PIPES AND SLEEVE / WRAP SHALL BE ADEQUATELY SUPPORTED AND SECURED AGAINST DISPLACEMENT BEFORE AND DURING CONCRETE PLACEMENT.
9. COORDINATE PIPE LOCATIONS SO THAT FOOTING REINFORCING IS NOT DISPLACED. MOVE PIPES TO MAINTAIN 2" CLR FROM REINFORCING TO SLEEVE / WRAP.
10. PIPES NEXT TO BUT NOT CROSSING FOOTING SHALL COMPLY WITH TYPICAL DETAIL FOR PIPE ADJACENT TO FOOTINGS.

15 TYP PIPE CROSSING FOOTINGS

SCALE: NTS

S-_033000_T016A
150623

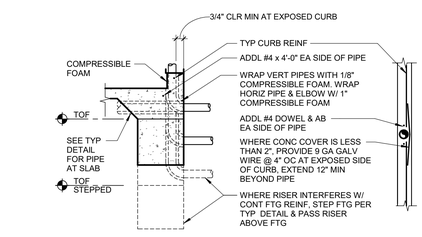

AT CONT FOOTING PLAN OF CURB

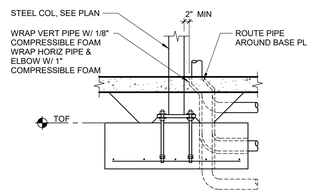

AT PAD FOOTING

NOTES:
1. PIPE AS NOTED SHALL REFER TO: DUCTS, CONDUITS, ETC. ELECTRICAL CONDUITS 1" DIA OR LESS NEED NOT BE WRAPPED.
2. PIPES SHALL NOT PENETRATE A SILL PLATE AT SHEAR WALLS.

16 TYP PIPE RISERS AT FOOTINGS

SCALE: NTS

S-_033000_T014B
181003. Q1

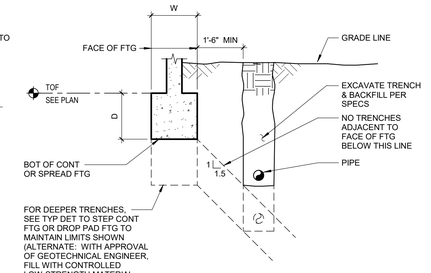

NOTES:
1. W = WIDTH FTG, D = DEPTH FTG.
2. TRENCHING LIMITATIONS ARE SAME FOR BOTH FACES OF FOOTING.
3. MAINTAIN LIMITS SHOWN FOR WIDER OR SHALLOWER FTG BEYOND, WHERE OCCURS.
4. PIPE AS NOTED SHALL REFER TO: PIPES, DUCTS, CONDUITS, ETC.

17 TYP PIPE ADJACENT TO FOOTING

1/2" = 1'-0"

S-_033000_T015B
150630

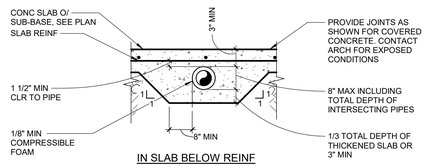

IN SLAB BELOW REINF

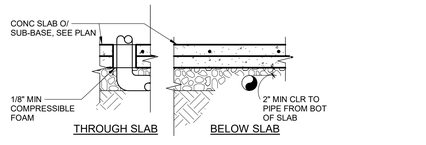

THROUGH SLAB BELOW SLAB

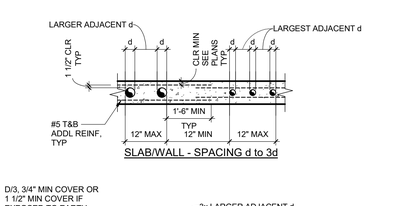

SLAB/WALL - SPACING d to 3d

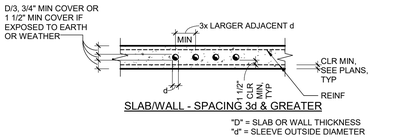

SLAB/WALL - SPACING 3d & GREATER

"D" = SLAB OR WALL THICKNESS
"d" = SLEEVE OUTSIDE DIAMETER

NOTES:
1. PIPE AS NOTED SHALL REFER TO: PIPES, DUCTS, CONDUITS, ETC. ELECTRICAL CONDUITS 1" DIA OR LESS NEED NOT BE SLEEVED
2. PIPES SHALL BE INSTALLED SUCH THAT CUTTING, BENDING OR DISPLACEMENT OF REINFORCEMENT FROM ITS PROPER LOCATION WILL NOT BE REQUIRED.
3. PIPES EMBEDDED IN SLABS & WALLS SHALL BE 2" MAX DIA & MIN SCHEDULE 40.

19 TYP PIPE AT SLABS / WALLS

SCALE: NTS

S-_033000_T026A
140127

IDENTIFICATION STAMP
DIV. OF THE STATE ARCHITECT
APP: 02-118630 INC:
REVIEWED FOR
SS ☐ FLS ☐ ACS ☑
DATE: 04/13/2021

OFFICE OF THE STATE FIRE MARSHAL
APPROVED FIRE AND PANIC ONLY
Approval of this plan does not authorize or approve any omission or deviation from applicable regulations. Final approval is subject to field inspection. One set of approved plans shall be available on the project site at all times.
PERMIT NO. 20-N-2332-CP
REVIEWED BY: LEO CATAYLO, OSFM
DATE: 4 / /2021

DGS GENERAL SERVICES
Department of General Services
State of California
Real Estate Services Division
Project Management & Development Branch
707 Third Street, Suite 4-105
West Sacramento, California 95605

NICHOLS MELBURG & ROSSETTO ARCHITECTS + ENGINEERS
300 Knollcrest Drive
Redding, CA 96002
(530) 222-3300 (530) 222-3538 FAX
http://www.nmrdesign.com

Copyright © 2021
All ideas, designs, arrangements and plans indicated or represented by this drawing are owned by, and the property of, NICHOLS, MELBURG and ROSSETTO and were created, evolved and developed for use on, and in conjunction with, the specified project. None of such ideas, designs, arrangements or plans shall be used by, or disclosed to any person, firm or corporation for any purpose whatsoever without the written permission of NICHOLS, MELBURG and ROSSETTO.

LICENSE STAMPS

REGISTERED PROFESSIONAL ENGINEER — CHRISTOPHER E. HUNTINGTON — No. S4758 — CIVIL — STATE OF CALIFORNIA
3/19/2021

STRUCTURAL CONSULTANT

LIONAKIS
1919 Nineteenth Street
Sacramento CA 95811
P 916.558.1900 F 916.558.1919
www.lionakis.com

DRAWING STATUS
CONSTRUCTION DOCUMENTS

ISSUE

No.	Date	Description
1	10/22/2020	INITIAL PLAN REVIEW
2	01/08/2021	AGENCY RESUBMITTAL
3	03/22/2021	AGENCY RESUBMITTAL

If drawing is not 30" x 42" it is a reduced print

PROJECT
RESIDENTIAL CENTER, UKIAH: REPLACEMENT OF EXISTING RESIDENTIAL CENTER
440 EAST HILL ROAD
WILLITS, CALIFORNIA 95490
MENDOCINO COUNTY
CALIFORNIA CONSERVATION CORP

Supervisor	Designed	Drawn
		Author

DSA Application No.
02-118630

SHEET TITLE
DETAILS - TYPICAL CONCRETE

DGS Project Number: 00000000001826
Lionakis Project Number: 018322

Reference North
Sheet Scale: As indicated
Sheet Number: S532

ISSUE DATE
July 9, 2021

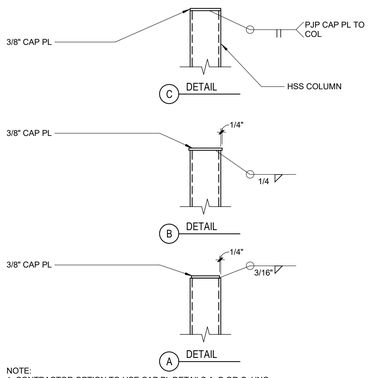

NOTE:
1. CONTRACTOR OPTION TO USE CAP PL DETAILS A, B OR C, UNO.

1 TYP CAP PL AT TOP OF COL

1" = 1'-0" S-_051200_T0094 180723

TYP BEAM CONNECTION SCHEDULE			
NOMINAL BEAM OR CHANNEL DEPTH	HIGH STRENGTH BOLTS (QUANTITY) DIA	SINGLE ROW OF BOLTS	
		WELD SIZE W	SHEAR TAB THICKNESS T
8, 9, 10	(2) 7/8"	3/16"	1/4"
12, 13, 14	(3) 7/8"	1/4"	3/8"
15, 16, 18	(4) 7/8"	1/4"	3/8"
20, 21	(5) 7/8"	1/4"	3/8"
24	(6) 7/8"	1/4"	3/8"
27	(7) 7/8"	1/4"	3/8"
30	(8) 7/8"	1/4"	3/8"
33	(9) 7/8"	1/4"	3/8"
36	(10) 1"	5/16"	7/16"
40	(11) 1"	5/16"	7/16"
44	(12) 1"	5/16"	7/16"

NOTES:
1. USE SUPPORTED BEAM DEPTH WITH SCHEDULE. CONNECTION INFORMATION TO BE BASED ON SUPPORTED BEAM DEPTH.

5 TYP BEAM CONNECTION SCHEDULE

SCALE: NTS S-_051200_T084 180723. Q1

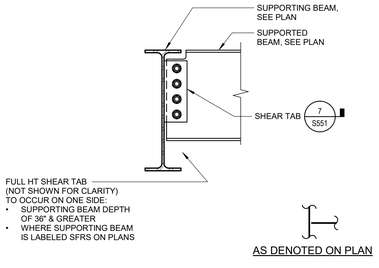

NOTES:
1. ONE SIDED CONNECTION OCCURS WHERE BEAMS ARE OVER 2'-0" APART (PLAN DIM) ON OPPOSITE SIDE OF SUPPORTING BEAM WEB

9 TYP ONE SIDED BEAM TO BEAM

SCALE: NTS S-_051200_T086 180723

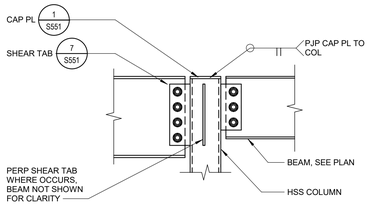

2 TYP WF BM TO HSS COL AT TOP OF COL

1" = 1'-0" W-_051200_W0012 140127

HOLE DIMENSIONS AT STEEL TO STEEL CONNECTIONS				
BOLT DIA, D	STANDARD (DIA)	OVERSIZED (DIA)	SHORT SLOT (WIDTH X LENGTH)	LONG SLOT (WIDTH X LENGTH)
1/2"	9/16"	5/8"	9/16"X11/16"	9/16"X1 1/4"
5/8"	11/16"	13/16"	11/16"X7/8"	11/16"X1 9/16"
3/4"	13/16"	15/16"	13/16"X1"	13/16"X1 7/8"
7/8"	15/16"	1 1/16"	15/16"X1 1/8"	15/16"X2 3/16"
1"	1 1/16"	1 1/4"	1 1/16"X1 5/16"	1 1/16"X2 1/2"
1 1/8" & GREATER	D + 1/16"	D + 5/16"	(D + 1/16")x(D + 3/8")	(D + 1/16")x(2.5 x D)

HOLE DIMENSIONS AT STEEL TO CONCRETE / MASONRY CONNECTIONS			
BOLT DIA	ANCHOR ROD HOLE DIA	BOLT DIA	ANCHOR ROD HOLE DIA
1/2"	15/16"	1 1/4"	2 1/16"
5/8"	1 1/16"	1 1/2"	2 5/16"
3/4"	1 5/16"	1 3/4"	2 3/4"
7/8"	1 9/16"	2"	3 1/4"
1"	1 13/16"	2 1/2"	3 3/4"

PLATE WASHER SCHEDULE (WITH STANDARD HOLE AT CENTER)			
BOLT DIA	STEEL PLATE SIZE	BOLT DIA	STEEL PLATE SIZE
1/2"	3/16"X1 1/2" SQ	1 1/4"	1/2"X3 1/2" SQ
5/8"	1 /4"X1 3/4" SQ	1 1/2"	1/2"X4" SQ
3/4"	1 /4"X2" SQ	1 3/4"	5/8"X4 1/2" SQ
7/8"	5/16"X2 1/2" SQ	2"	3/4"X5" SQ
1"	3/8"X3" SQ	2 1/2"	7/8"X6" SQ

6 TYP BOLT HOLE & PLATE WASHER SCHEDULE

SCALE: NTS S-_051200_T100 180723. Q1

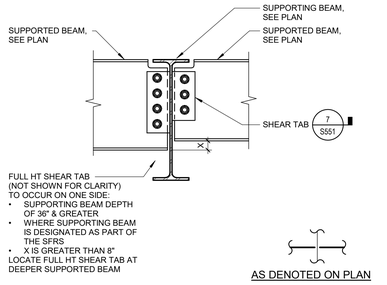

10 TYP TWO SIDED BEAM TO BEAM

SCALE: NTS S-_051200_T087 180723

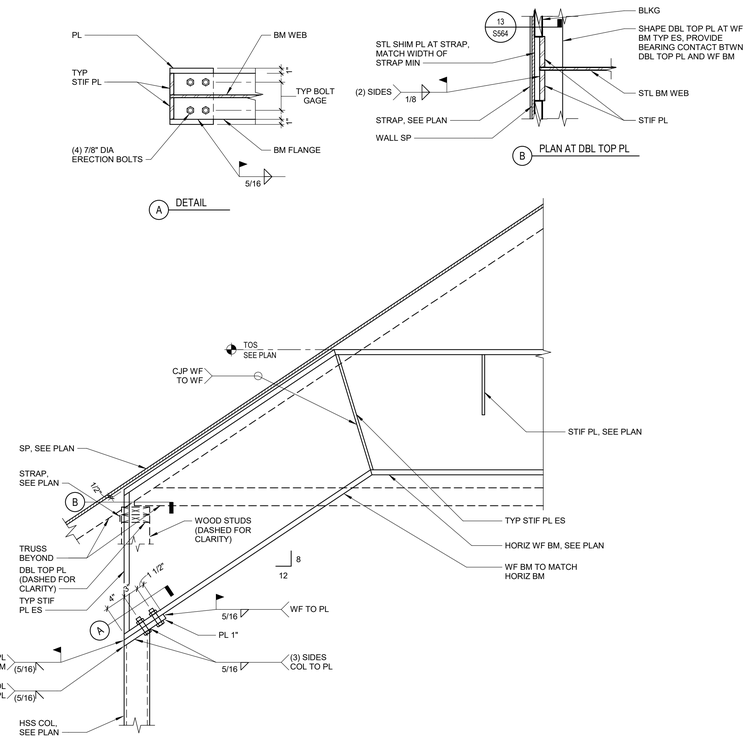

14 DETAIL

1" = 1'-0" Q1

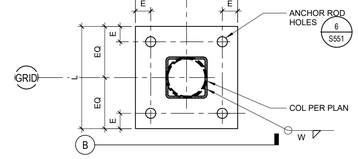

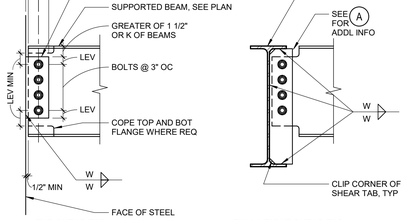

NOTES:
1. SHEAR TABS SHALL BE CONDITION (A) TYP, UNO.
2. FOR BOLT SIZE & QUANTITY, SHEAR TAB THICKNESS "T" AND WELD SIZE "W" SEE 5 S551 USING NOMINAL DEPTH OF SUPPORTED BEAM.
3. FOR K DIMENSION SEE AISC.
4. ALL BOLTS SHALL BE IN STANDARD HOLES OR HORIZONTAL SHORT SLOTTED HOLES, TYP UNO.
5. LEV = 1 1/2" MIN AT 7/8" DIA BOLTS AND 1 3/4" MIN AT 1" DIA BOLTS.

7 TYP SHEAR TAB

SCALE: NTS S-_051200_T085 191114

TYP BOLT GAGE FOR W SHAPES	
NOMINAL bf (IN)	g (IN)
4 ≤ bf < 5	2 1/4
5 ≤ bf < 6	2 3/4
6 ≤ bf < 8	3 1/2
8 ≤ bf < 15	5 1/2

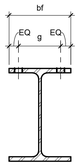

11 TYP BOLT GAGE AT WF BEAMS

SCALE: NTS S-_051200_T005A 140127

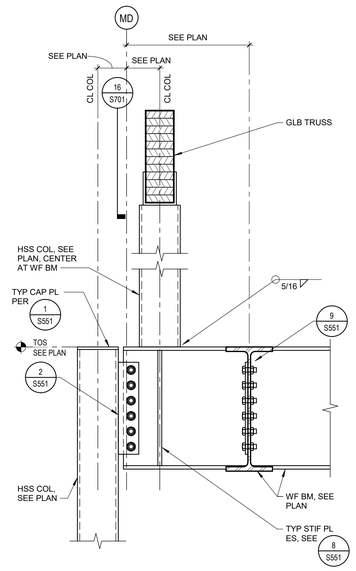

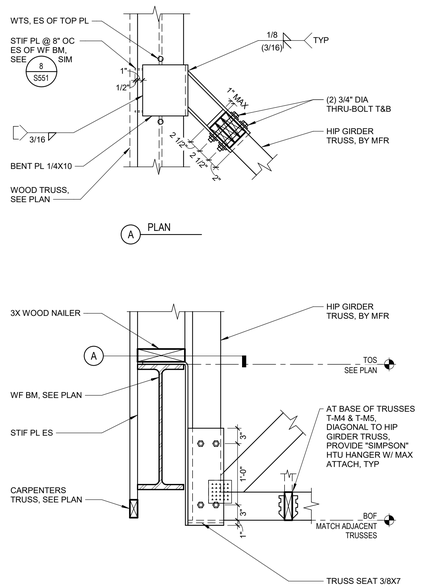

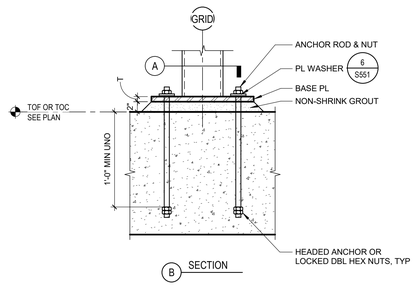

HSS COLUMN BASE PLATE SCHEDULE					
COLUMN SIZE	ANCHOR ROD DIA	BASE PLATE DIMENSIONS			WELD SIZE W
		T	E	L	
HSS4	3/4"	3/4"	1 1/2"	10"	1/4"
HSS5	3/4"	3/4"	1 1/2"	11"	1/4"
HSS6	3/4"	3/4"	1 1/2"	12"	1/4"
HSS7	3/4"	3/4"	1 1/2"	13"	1/4"
HSS8	1"	1"	2"	16"	5/16"
HSS10	1"	1"	2"	18"	5/16"
HSS12	1"	1"	2"	20"	5/16"

NOTES:
1. APPLIES TO SQUARE, RECTANGULAR (2 to 1 MAX DEPTH TO WIDTH RATIO), PIPE & ROUND HSS.
2. WELD NOT REQUIRED AT RADIUS CORNERS OF SQUARE OR RECTANGULAR HSS.
3. AT RECTANGULAR HSS, USE LARGER HSS DIMENSION.

4 TYP HSS COL BASE PLATE

1" = 1'-0" S-_051200_T001A 180723

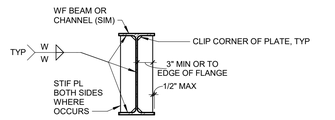

TYP STIF PL SCHEDULE		
NOMINAL BEAM OR CHANNEL DEPTH	WELD SIZE W	STIF PL THICKNESS T
8, 9, 10	3/16"	1/4"
12, 13, 14	1/4"	3/8"
15, 16, 18	1/4"	3/8"
20, 21	1/4"	3/8"
24, 27, 30, 33	5/16"	1/2"
36, 40, 44	5/16"	1/2"

8 TYP STIFFENER PLATE

SCALE: NTS S-_051200_T090 180723

16 DETAIL

1" = 1'-0" Q1

20 DETAIL

1" = 1'-0" Q1

Plot Date: 3/19/2021 11:24:29 AM
File Name: BIM 360://CCC Willits Residential Center/018322_S-MASTER_R18_CENTRAL.rvt

IDENTIFICATION STAMP
DIV. OF THE STATE ARCHITECT
APP: 02-118630 INC:
REVIEWED FOR
SS ☐ FLS ☐ ACS ☑
DATE: 04/13/2021

OFFICE OF THE STATE FIRE MARSHAL
APPROVED FIRE AND PANIC ONLY
Approval of this plan does not authorize or approve any omission or deviation from applicable regulations. Final approval is subject to field inspection. One set of approved plans shall be available on the project site at all times.
PERMIT NO. 20-N-2332-CP
REVIEWED BY: LEO CATAYLO, OSFM
DATE: 4 / /2021

DGS GENERAL SERVICES
Department of General Services
State of California
Real Estate Services Division
Project Management & Development Branch
707 Third Street, Suite 4-105
West Sacramento, California 95605

NICHOLS MELBURG & ROSSETTO ARCHITECTS + ENGINEERS
300 Knollcrest Drive
Redding, CA. 96002
(530) 222-3300 (530) 222-3538 FAX
http://www.nmrdesign.com

Copyright © 2021
All ideas, designs, arrangements and plans indicated or represented by this drawing are owned by, and the property of, NICHOLS, MELBURG and ROSSETTO and were created, evolved and developed for use on, and in conjunction with, the specified project. None of such ideas, designs, arrangements or plans shall be used by, or disclosed to any person, firm or corporation for any purpose whatsoever without the written permission of NICHOLS, MELBURG and ROSSETTO.

LICENSE STAMPS

REGISTERED PROFESSIONAL ENGINEER — HAROLD E. HUNTINGTON — No. S4709 — STRUCTURAL — STATE OF CALIFORNIA
3/19/2021

STRUCTURAL CONSULTANT
LIONAKIS
1919 Nineteenth Street
Sacramento CA 95811
P 916.558.1900 F 916.558.1919
www.lionakis.com

DRAWING STATUS
CONSTRUCTION DOCUMENTS

ISSUE

No.	Date	Description
1	10/22/2020	INITIAL PLAN REVIEW
2	01/08/2021	AGENCY RESUBMITTAL
3	03/22/2021	AGENCY RESUBMITTAL

If drawing is not 30" x 42" it is a reduced print

PROJECT
RESIDENTIAL CENTER, UKIAH: REPLACEMENT OF EXISTING RESIDENTIAL CENTER
440 EAST HILL ROAD
WILLITS, CALIFORNIA 95490
MENDOCINO COUNTY
CALIFORNIA CONSERVATION CORP

Supervisor	Designed	Drawn
		Author

DSA Application No.
02-118630

SHEET TITLE
DETAILS - STRUCTURAL STEEL

DGS Project Number: 00000000001826
Lionakis Project Number: 018322

Reference North: NORTH
Sheet Scale: As indicated
Sheet Number: S551

ISSUE DATE
July 9, 2021

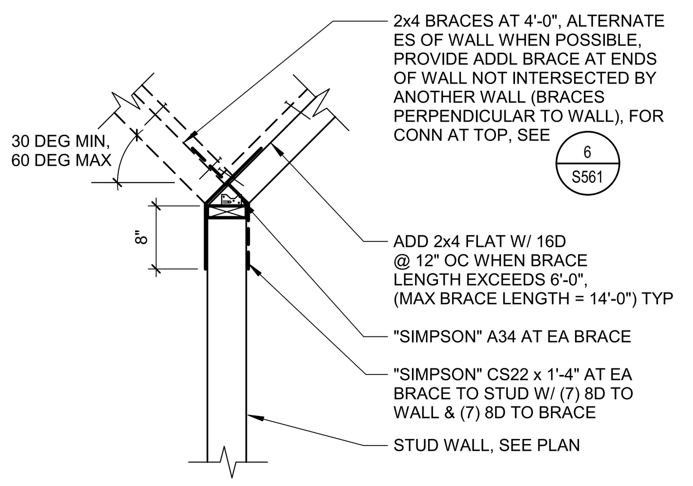

NOTE:
1. FRAMING ABOVE MAY SLOPE, SEE PLANS

1 TYP INT NON-STRUCTURAL PARTIAL HEIGHT WALL BRACING

3/4" = 1'-0" SA_061000_T032A 191120. Q2

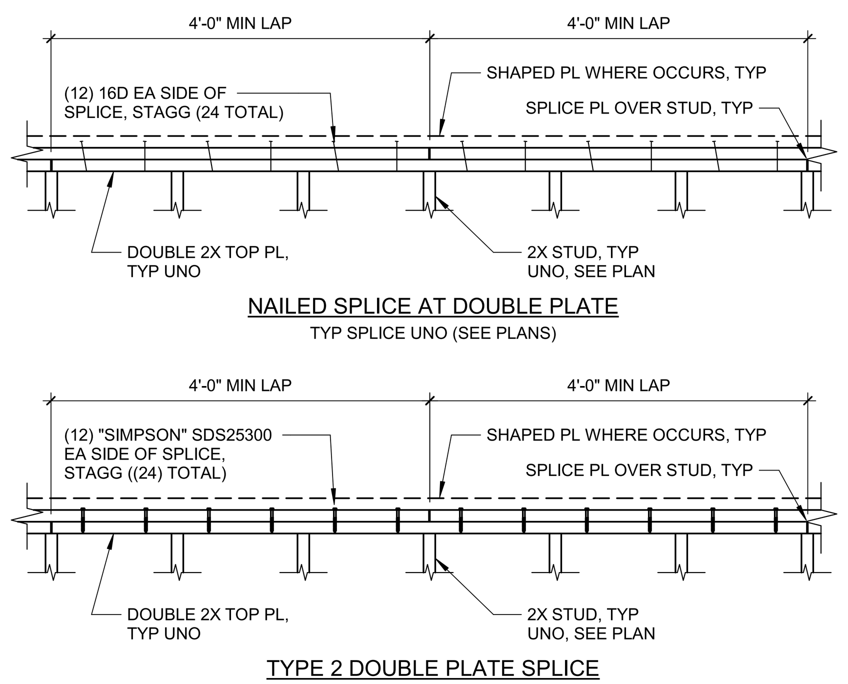

2 TYP TOP PLATE SPLICES

SCALE: NTS S-_061010_T038A 190227. Q2

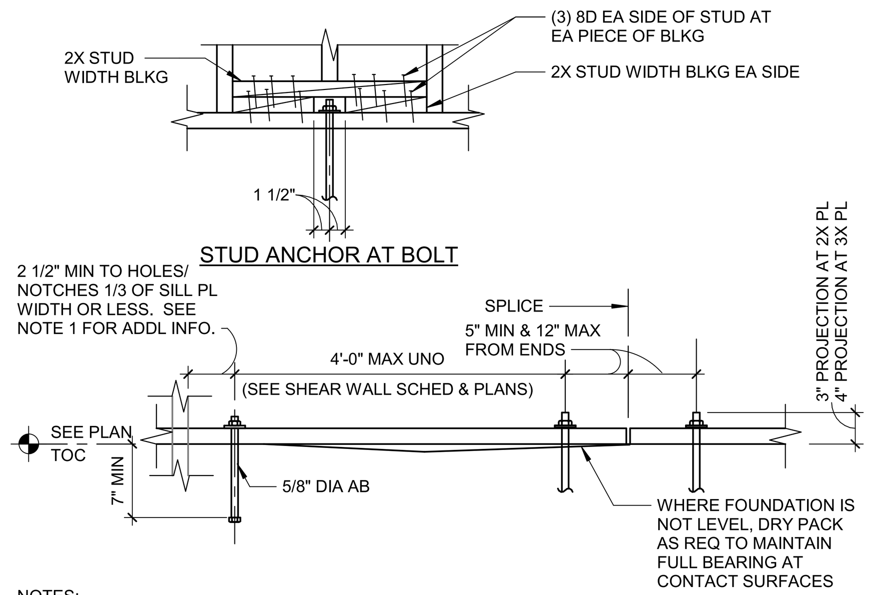

NOTES:
1. PLATES BORED, CUT OR NOTCHED MORE THAN 1/3 OF WIDTH SHALL HAVE ADDL BOLTS EACH SIDE OF BORE, CUT OR NOTCH (AS FOR SPLICES)
2. TWO BOLTS MIN FOR EACH PIECE OF SILL
3. OUTSIDE DIA OF THREADS MUST EQUAL BOLT SHANK DIA
4. HOLDOWN BOLTS DO NOT REPLACE ANCHOR BOLTS
5. CENTER ALL AB'S ON CENTERLINE OF SILL UNO.
6. SILL PLATE ANCHOR BOLTS MAY BE REPLACED W/ 5/8" DIA "SIMPSON" TITEN HD W/ 4 3/4" MIN NOMINAL EMBED (1 3/4" MIN CONC EDGE DISTANCE AND 6" MIN CONC END DISTANCE).

3 TYP AB AT WOOD SILL PLATE

SCALE: NTS S-_061010_T035A 200716

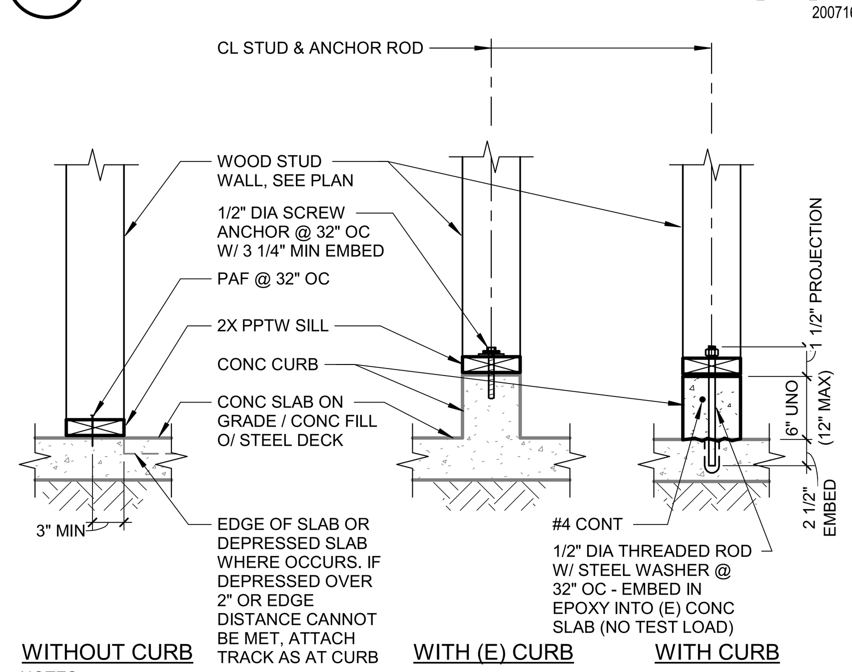

NOTES:
1. TWO ANCHORS MIN FOR EA PIECE OF SILL, LOCATED 6" FROM ENDS.
2. PROVIDE ADDITIONAL ANCHOR 6" FROM EA SIDE OF ANY SPLICES, HOLES OR NOTCHES IN SILL.
3. SCREW ANCHORS SHALL BE "SIMPSON" TITEN HD (ICC ESR 2713) OR "HILTI" KH-EZ (ICC ESR 3027).
4. EPOXY SHALL BE "SIMPSON" SET-XP (IAPMO ER 263) OR "HILTI" HY-200 (ICC ESR 3187).

4 TYP INT NON-STRUCT WOOD WALL CONN AT BASE

SCALE: NTS SA_061000_T019C 190225. Q2

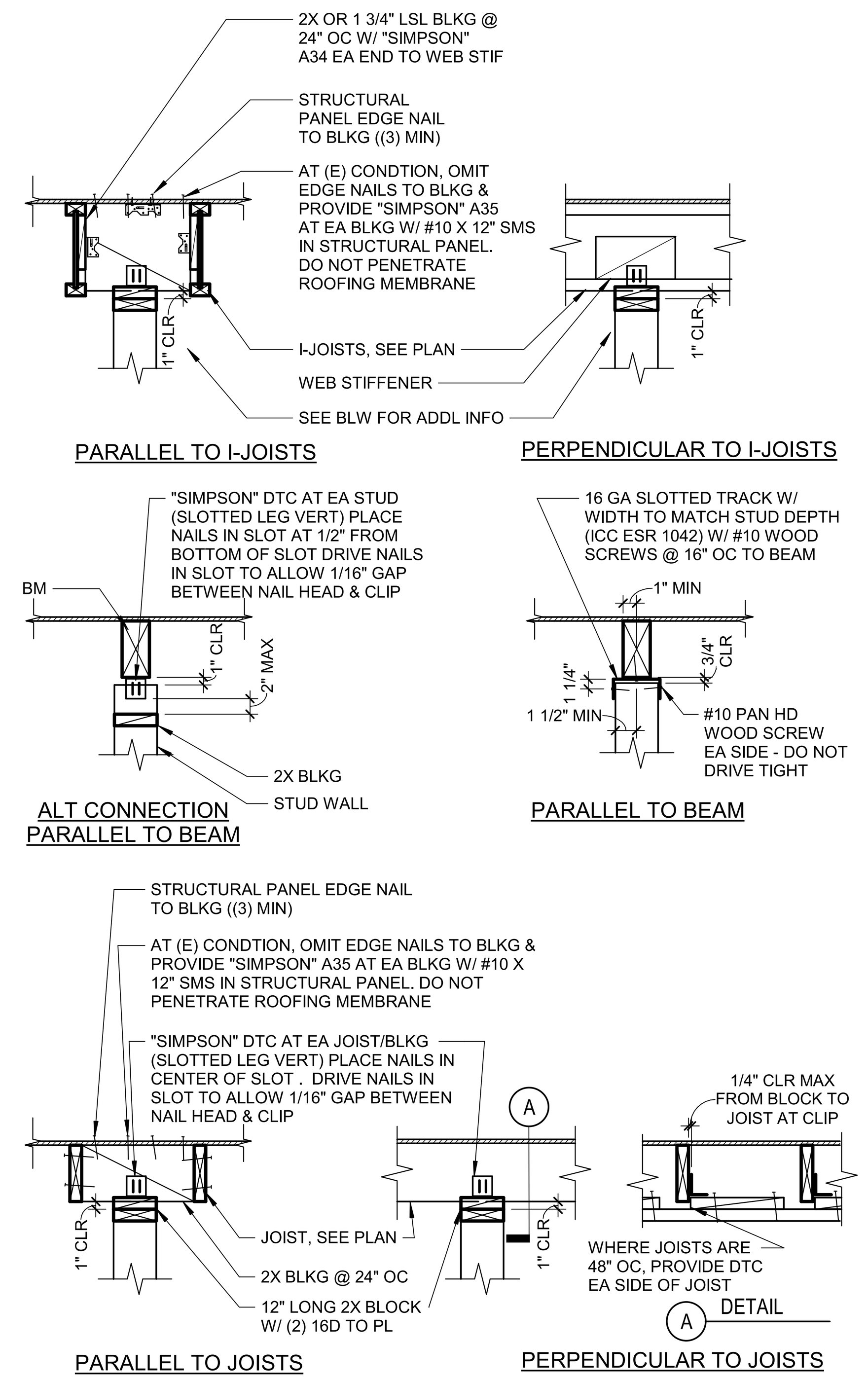

6 TYP INT NON-STRUCTURAL WALL ANCHORAGE AT JOISTS

3/4" = 1'-0" SA_061000_T036A 191120. Q2

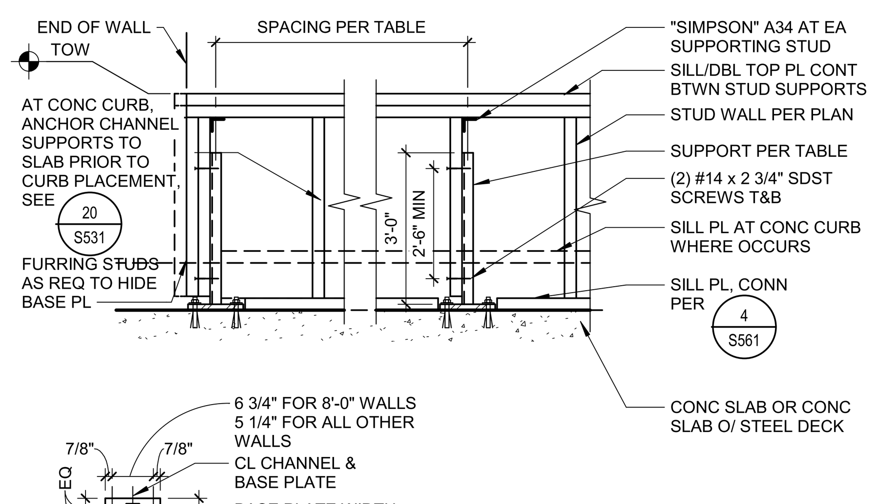

TABLE FOR MAXIMUM SPACING OF SUPPORTS

STUD WALL	SUPPORT SIZE	BASE PL WIDTH	MAX WALL HEIGHT 4'-0"	5'-0"	6'-0"
2x6	C4x4.5	5 1/2"	10'-8"	6'-8"	4'-0"
2x8	C4x4.5	7"	-	9'-4"	6'-8"

NOTES:
1. EXPANSION ANCHORS MUST BE INSTALLED WITH SPECIAL INSPECTION. DO NOT USE THIS DETAIL FOR WALLS USED AS GUARDRAILS OR WALLS WITH GRAB BARS.

7 TYP PARTIAL HEIGHT STRUCT WALL SUPPORT

SCALE: NTS S-_061000_T013A 180723. Q1

QUANTITY OF KING/TRIMMER STUDS EA SIDE OF OPNG

WALL CONFIG		INTERIOR WALL H = 12'-0" OR LESS	INTERIOR WALL H = 16'-0" OR LESS	EXTERIOR WALL H = 10'-0" OR LESS	EXTERIOR WALL H = 12'-0" OR LESS
OPENING WIDTH, L	4' MAX	(1) KING (1) TRIMMER	(2) KING (1) TRIMMER	(1) KING (1) TRIMMER	(2) KING (1) TRIMMER
	6'-6" MAX	(1) KING (2) TRIMMER	(2) KING (2) TRIMMER	(2) KING (1) TRIMMER	(3) KING (1) TRIMMER
	10' MAX	(2) KING (2) TRIMMER	(3) KING (2) TRIMMER	(2) KING (2) TRIMMER	(4) KING (2) TRIMMER

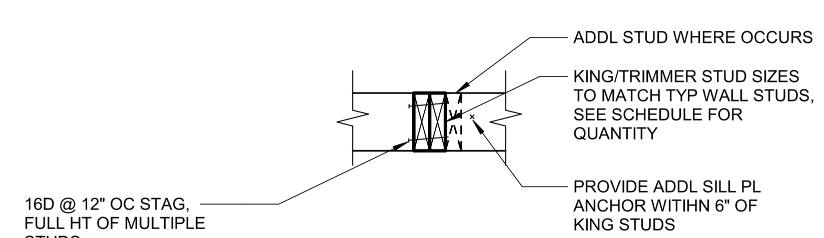

8 TYP WOOD KING/TRIMMER STUDS

SCALE: NTS S-_061000_T014A 180723. Q2

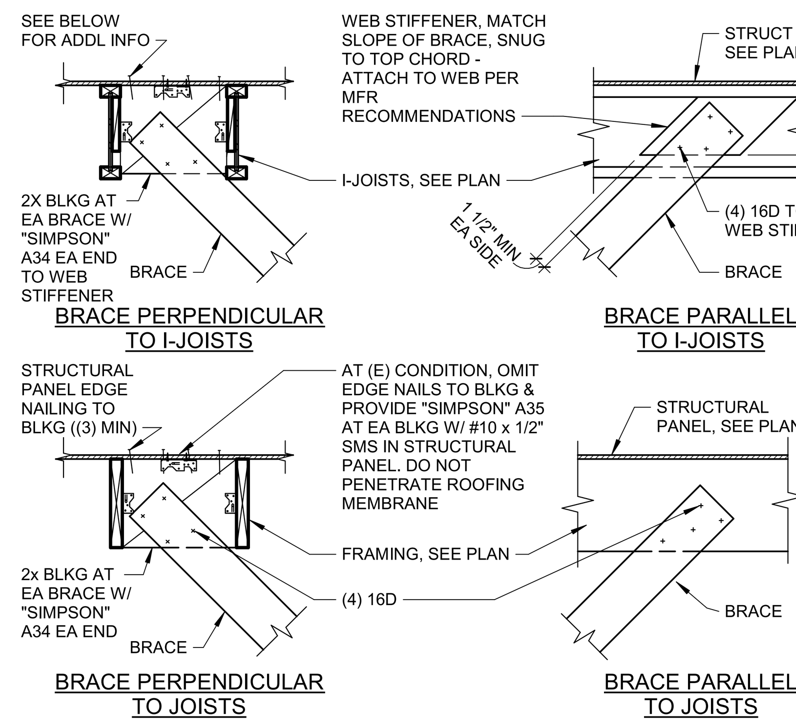

9 TYP BRACE CONN TO WOOD JOISTS

SCALE: NTS S-_061000_T038A 180508. Q2

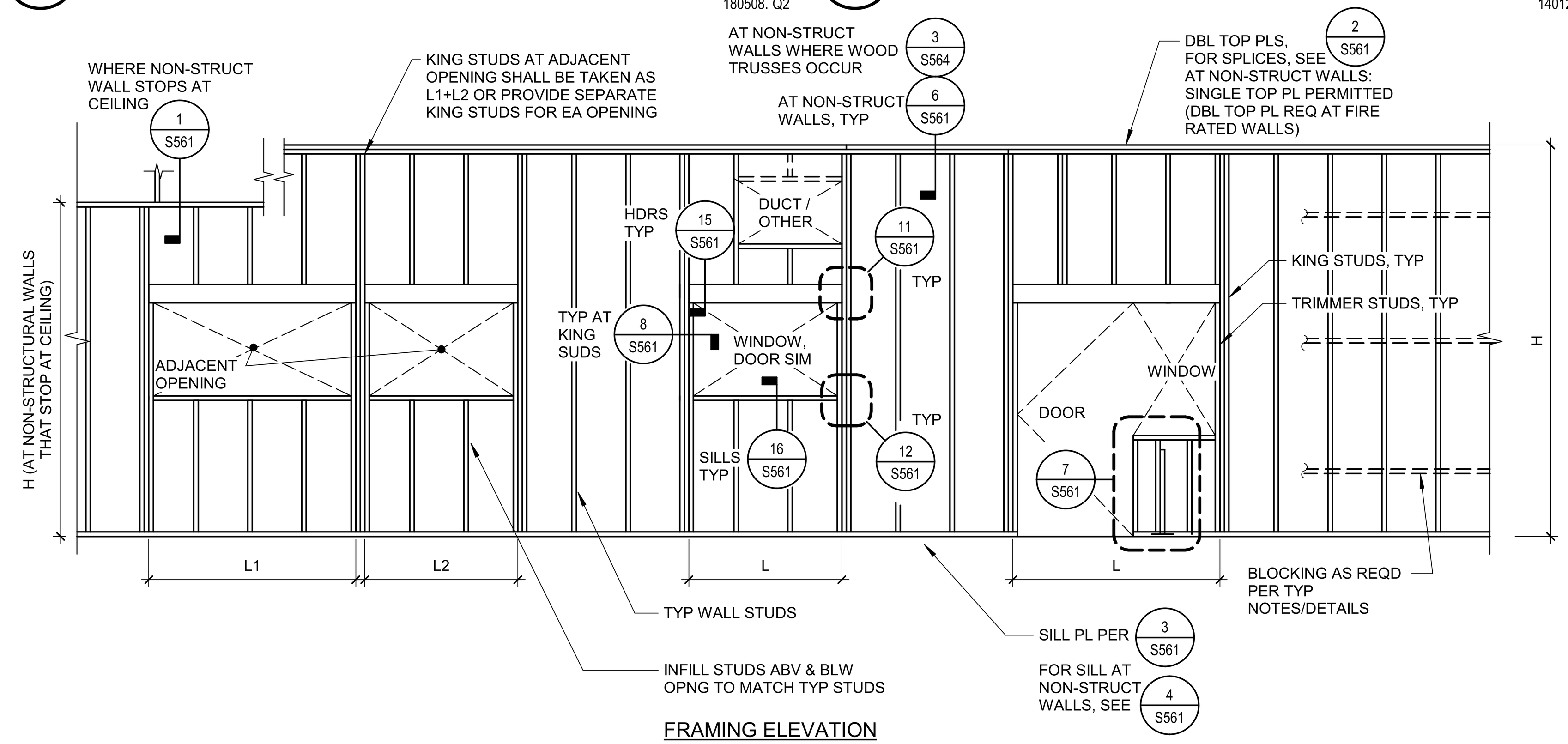

10 TYP WOOD STUD WALL

SCALE: NTS S-_061000_T011A 180723. Q2

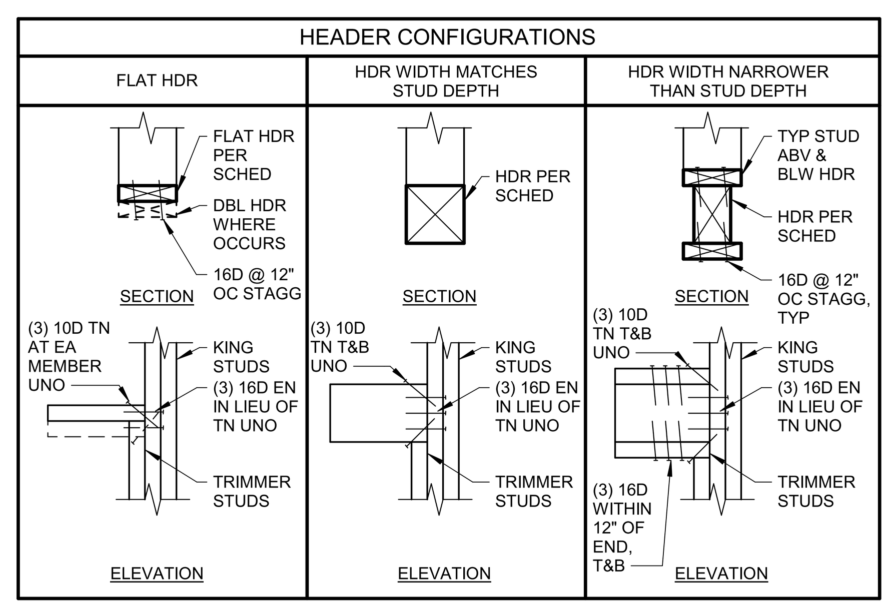

11 TYP WOOD HEADER CONN TO KING STUDS

SCALE: NTS S-_061000_T003A 180723. Q2

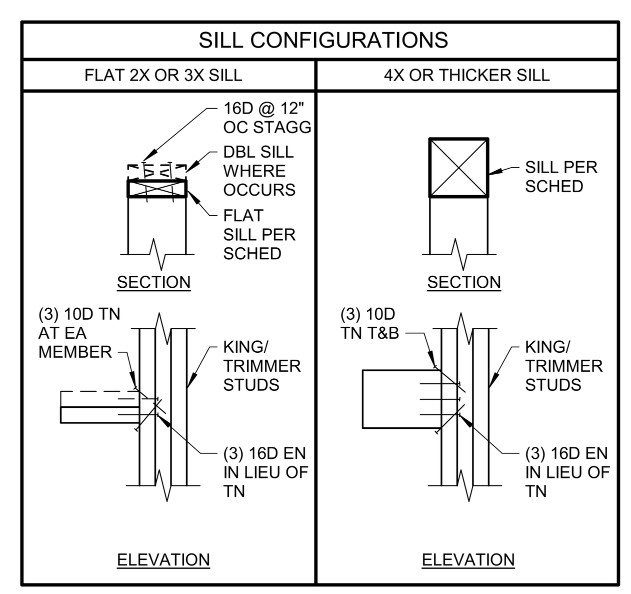

12 TYP WOOD SILL CONN TO KING STUDS

SCALE: NTS S-_061000_T005A 180723. Q2

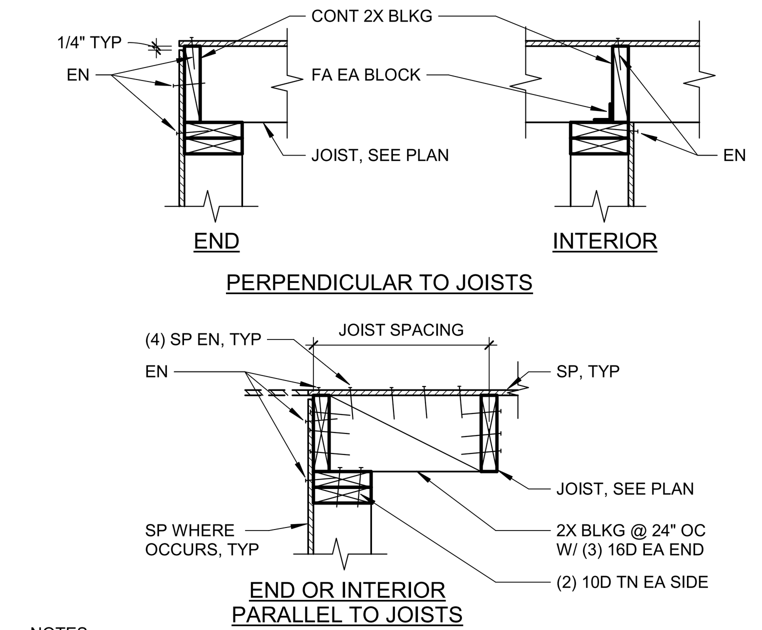

NOTES:
1. AT WALL PERPENDICULAR TO WOOD I-JOISTS, USE LSL BLOCKING MATCHING I-JOIST DEPTH IN LIEU OF 2X BLOCKING.
2. AT WALL PARALLEL TO WOOD I-JOISTS, USE LSL BLOCKING AND RIM MATCHING I-JOIST DEPTH IN LIEU OF 2X BLOCKING.

13 TYP INTERIOR OR EXTERIOR STRUCT WALL ANCHORAGE AT JOISTS

1" = 1'-0" S-_061010_T037A 140127. Q2

HEADER SCHEDULE

OPNG WIDTH, L	4' MAX	6'-6" MAX	10' MAX	OVER 10'
HDR TYPE	HS1	HS2	HS3	SEE PLANS
MIN HDR SIZE	6X8	6X10	6X12	

NOTES:
1. HEADER TYPE TO BE SELECTED BASED ON WALL CONFIGURATION AND OPENING WIDTH UNLESS A SPECIFIC HDR TYPE IS NOTED ON OTHER DETAILS.
2. HEADER SIZE IS A MINIMUM AND MAY BE INCREASED TO MATCH WALL STUD WIDTH AS NEEDED.

15 TYP STRUCT WOOD HEADERS

SCALE: NTS S-_061000_T004A 180723. Q2

SILL SCHEDULE

OPNG WIDTH	4' MAX	6'-6" MAX	10' MAX	OVER 10'
SILL TYPE	SS1	SS2	SS3	SEE PLANS
MIN SILL SIZE	(1) 2X	(2) 2X	(2) 2X	

NOTES:
1. SILL TYPE TO BE SELECTED BASED ON OPENING WIDTH UNLESS A SPECIFIC SILL TYPE IS NOTED ON OTHER DETAILS.
2. 2X MATERIAL SHALL MATCH TYP WALL STUDS.

16 TYP STRUCT WOOD SILLS

SCALE: NTS S-_061000_T006A 180723. Q2

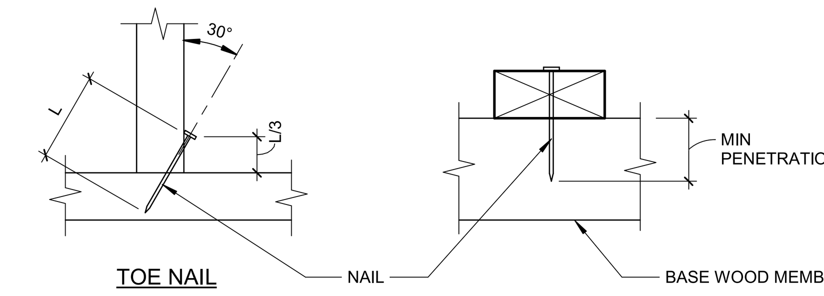

NAIL SCHEDULE

NAIL PENNY WEIGHT	SHANK DIA (IN)	LENGTH (IN)	MAXIMUM PREDRILL BIT DIA. (IN)	MINIMUM PENETRATION (IN)	MINIMUM SPACING (IN)	MINIMUM EDGE DISTANCE
8d COMMON	0.131	2 1/2	3/32	1 5/8	1 5/8	13/16
10d COMMON	0.148	3	7/64	1 7/8	1 7/8	15/16
16d COMMON	0.162	3 1/2	1/8	2	2	1
20d BOX	0.148	4	7/64	1 7/8	1 7/8	15/16
30d BOX	0.148	4 1/2	7/64	1 7/8	1 7/8	15/16
40d BOX	0.162	5	1/8	2	2	1

NOTES:
1. NAIL LENGTHS DENOTED ARE FOR STANDARD NAILS. SHORTER NAILS W/ EQUIVALENT DIA WILL BE PERMITTED IF MINIMUM PENETRATION INTO BASE WOOD MEMBER IS MAINTAINED.
2. PREDRILL TO PREVENT SPLITTING

17 TYP NAIL INSTALLATION

SCALE: NTS S-_061010_T005A 140127. Q2

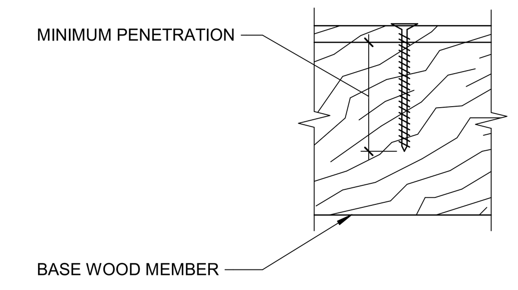

WOOD SCREW SCHEDULE

SCREW SIZE	SCREW DIAMETER	MAXIMUM PREDRILL BIT DIA (IN)	MINIMUM PENETRATION UNO
#8	0.164	3/32"	1 1/4"
#10	0.190	7/64"	1 1/2"
#12	0.216	1/8"	1 3/4"
#14	0.242	5/32"	2"

NOTES:
1. PREDRILL ALL SCREW HOLES W/ COUNTERSINK BIT.
2. ALL SCREWS TO HAVE FLAT HEAD FOR WOOD TO WOOD CONNECTIONS AND PAN HEAD FOR SP TO WOOD OR METAL TO WOOD CONNECTIONS.
3. ALL SCREWS TO HAVE ROLLED THREADS.
4. WAX SHALL BE USED ON THE WOOD SCREWS OR IN THE LEAD HOLES TO FACILITATE INSERTION AND PREVENT DAMAGE TO THE WOOD SCREW.
5. THE THREADED PORTION OF THE WOOD SCREW SHALL BE INSERTED IN ITS LEAD HOLE BY TURNING WITH A WRENCH, NOT BY DRIVING WITH A HAMMER.

18 TYP WOOD SCREW INSTALLATION

SCALE: NTS S-_061010_T006A 140127. Q2

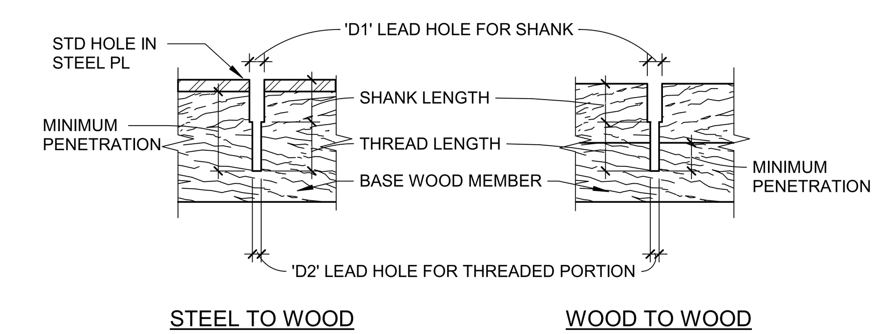

LAG SCREW SCHEDULE

LAG / SHANK DIA	1/4"	3/8"	1/2"	5/8"	3/4"	7/8"	1"
'D1' HOLE SIZE	1/4"	3/8"	1/2"	5/8"	3/4"	7/8"	1"
'D2' HOLE SIZE	1/8"	1/4"	1/4"	3/8"	1/2"	1/2"	5/8"
MIN PENETRATION	2 1/2"	3 3/4"	4 3/4"	6"	7 1/4"	8 1/2"	9 1/2"

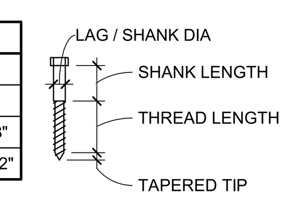

NOTES:
1. THE THREADED PORTION OF THE LAG SCREW SHALL BE INSERTED IN ITS LEAD HOLE BY TURNING WITH A WRENCH, NOT BY DRIVING WITH A HAMMER.
2. WAX SHALL BE USED ON THE LAG SCREW OR IN THE LEAD HOLE TO FACILITATE INSERTION AND PREVENT DAMAGE TO THE LAG SCREW.
3. MINIMUM PENETRATION DOES NOT INCLUDE THE LENGTH OF THE TAPERED TIP.

19 TYP LAG SCREW INSTALLATION

SCALE: NTS S-_061010_T004A 160711. Q2

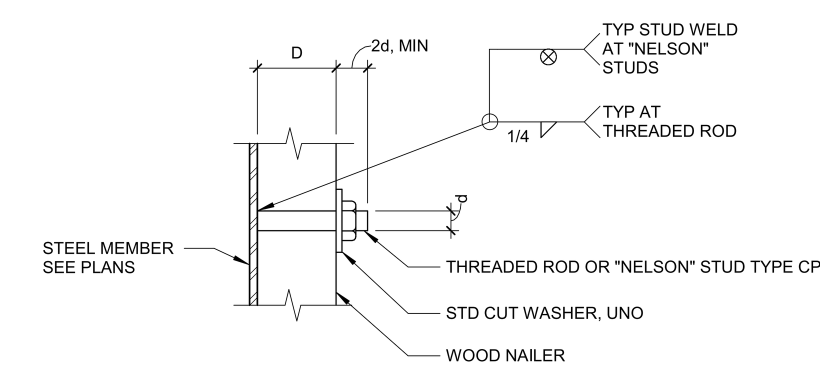

NOTES:
1. DO NOT COUNTERSINK BOLT TYP UNO
2. D = WOOD NAILER THICKNESS, SEE PLANS
3. d = BOLT DIAMETER (SEE PLANS & DETAILS)

20 TYP WELDED THREADED STUD (WTS)

SCALE: NTS S-_061010_T039A 140127. Q2

IDENTIFICATION STAMP DIV. OF THE STATE ARCHITECT
APP: 02-118630 INC:
REVIEWED FOR SS ☐ FLS ☐ ACS ☑
DATE: 04/13/2021

OFFICE OF THE STATE FIRE MARSHAL
APPROVED FIRE AND PANIC ONLY
Approval of this plan does not authorize or approve any omission or deviation from applicable regulations. Final approval is subject to field inspection. One set of approved plans shall be available on the project site at all times.
PERMIT NO.: 20-N-2332-CP
REVIEWED BY: LITO CATAYLO, OSFM
DATE: 4/1/2021

DGS GENERAL SERVICES
Department of General Services
State of California
Real Estate Services Division
Project Management & Development Branch
707 Third Street, Suite 4-105
West Sacramento, California 95605

NICHOLS MELBURG & ROSSETTO
ARCHITECTS + ENGINEERS
300 Knollcrest Drive
Redding, CA. 96002
(530) 222-3300 (530) 222-3538 FAX
http://www.nmrdesign.com

Copyright © 2021
All ideas, designs, arrangements and plans indicated or represented by this drawing are owned by, and the property of, NICHOLS, MELBURG and ROSSETTO and were created, evolved and developed for use on, and in conjunction with, the specified project. None of such ideas, designs, arrangements or plans shall be used by, or disclosed to any person, firm or corporation for any purpose whatsoever without the written permission of NICHOLS, MELBURG and ROSSETTO.

LICENSE STAMPS
REGISTERED PROFESSIONAL ENGINEER DARRON E. HUNTINGDALE No. S4788 STRUCTURAL STATE OF CALIFORNIA
3/19/2021

STRUCTURAL CONSULTANT
LIONAKIS
1919 Nineteenth Street
Sacramento CA 95811
P 916.558.1900 F 916.558.1919
www.lionakis.com

DRAWING STATUS
CONSTRUCTION DOCUMENTS

ISSUE

No.	Date	Description
1	10/22/2020	INITIAL PLAN REVIEW
2	01/08/2021	AGENCY RESUBMITTAL
3	03/22/2021	AGENCY RESUBMITTAL

If drawing is not 30" x 42" it is a reduced print

PROJECT
RESIDENTIAL CENTER, UKIAH: REPLACEMENT OF EXISTING RESIDENTIAL CENTER
440 EAST HILL ROAD
WILLITS, CALIFORNIA 95490
MENDOCINO COUNTY
CALIFORNIA CONSERVATION CORP

Supervisor | Designed | Drawn: Author

DSA Application No.
02-118630

SHEET TITLE
DETAILS - TYPICAL WOOD FRAMING

DGS Project Number 000000000001826
Lionakis Project Number 018322

Reference North: NORTH
Sheet Scale: As indicated
Sheet Number: S561

ISSUE DATE
July 9, 2021

Plot Date: 3/19/2021 11:24:23 AM
File Name: BIM 360://CCC Willits Residential Center/018322_S-MASTER_R18_CENTRAL.rvt

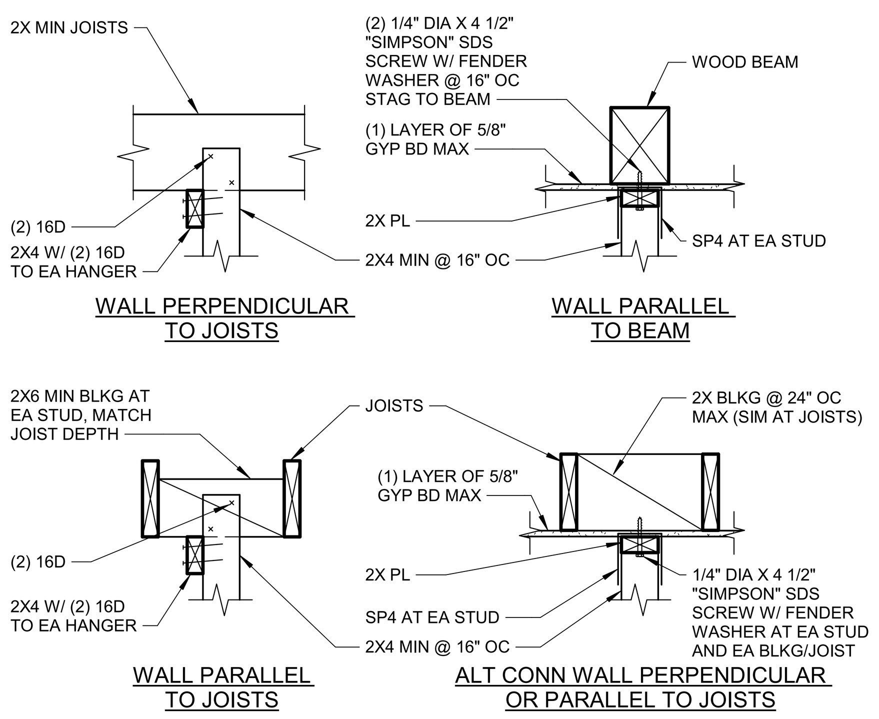

1 TYP SUSPENDED WOOD STUD ANCHORAGE

1" = 1'-0"

SA_061000_T015A
180510. Q1

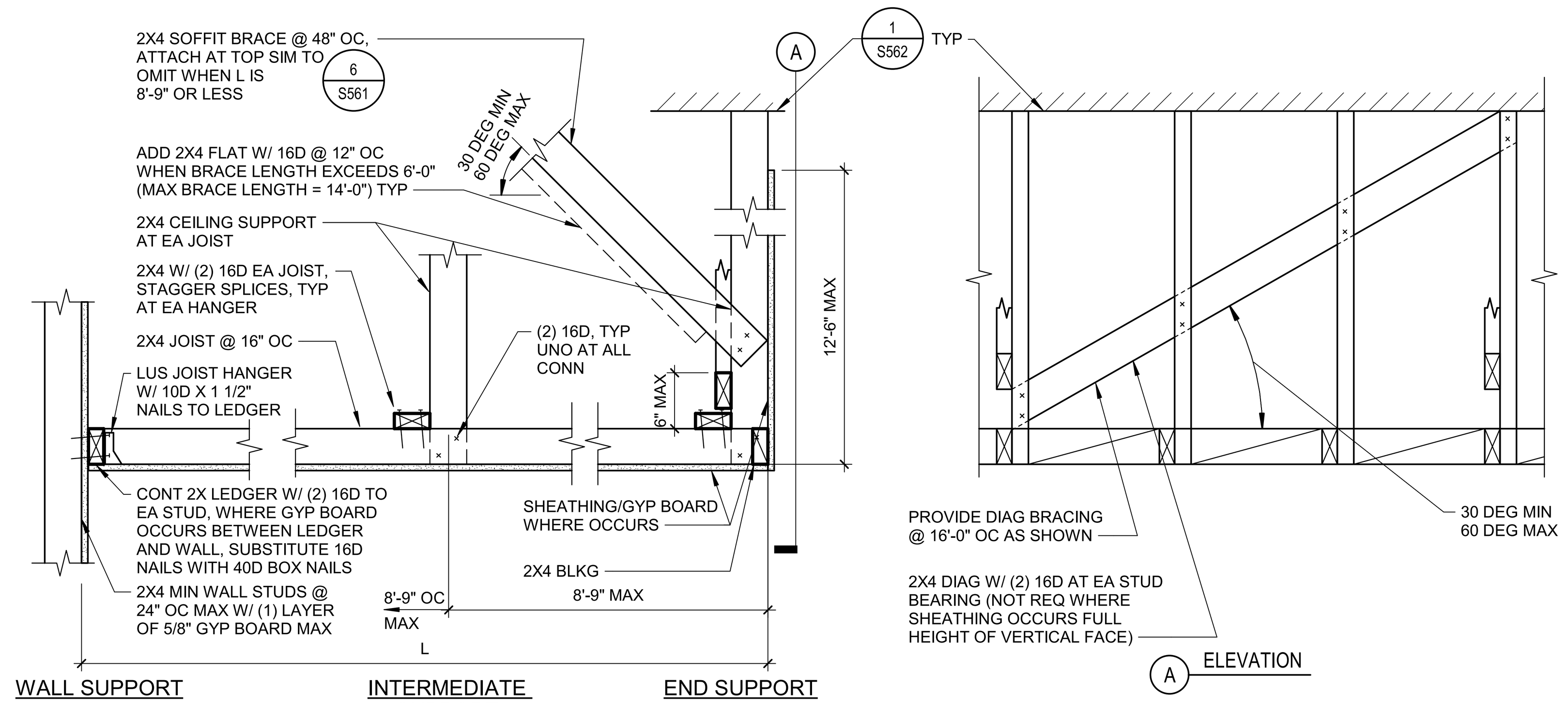

NOTE:
1. THIS DETAIL APPLIES TO NON-ACCESSIBLE CEILING SPACES ONLY.

2 TYP INTERIOR SUSPENDED WOOD STUD SOFFIT/CEILING

1" = 1'-0"

SA_061000_T001A
191120. Q2

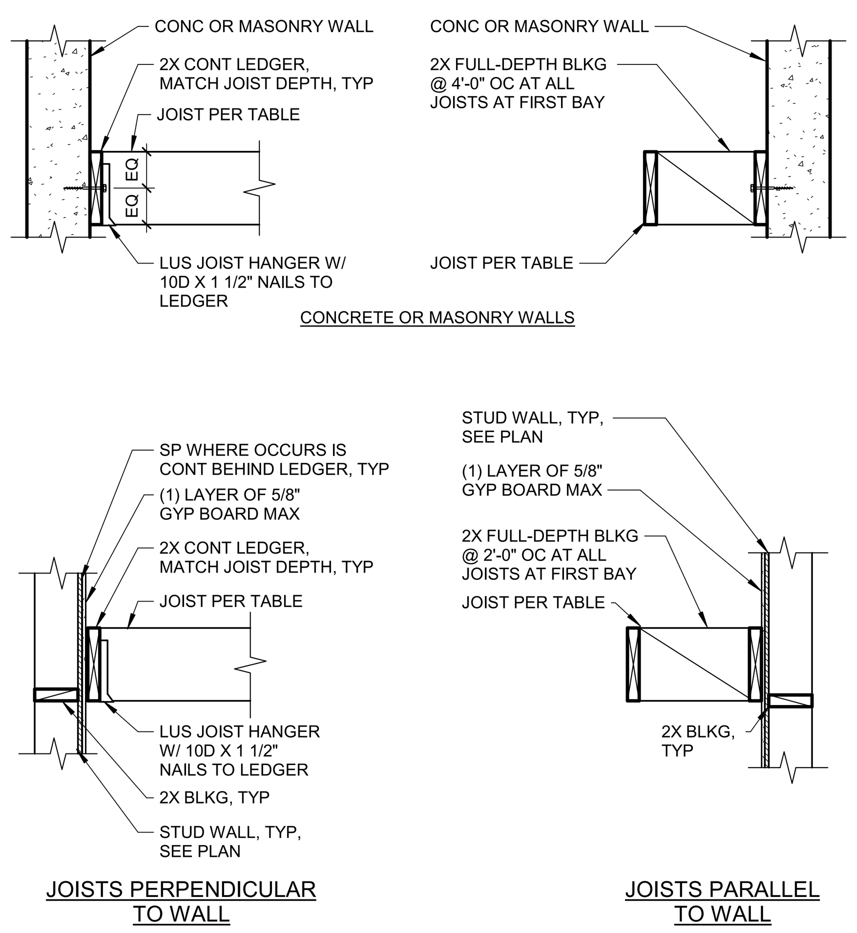

MAXIMUM SPAN	JOIST @ 16" OC	LEDGER NAILING AT EA STUD *	LEDGER BOLTING AT MASONRY OR CONC	
8'-9"	2x4	(2) 16D	16" OC	1/4" DIA CONCRETE SCREWS W/ 1 3/4" MIN EMBED @ SPACING INDICATED ALONG LEDGER, TYP
12'-10"	2x6	(2) 16D	16" OC	
16'-3"	2x8	(3) 16D	8" OC	
19'-10"	2x10	(3) 16D	8" OC	

* WHERE GYP BOARD OCCURS BETWEEN LEDGER AND WALL, SUBSTITUTE 16D NAILS WITH 20D.

NOTES:
1. DESIGN CAPACITY: 30 PSF UP OR DOWN (ASD) OR NET WIND UPLIFT = 70 PSF (ULTIMATE), DEFLECTION = L/360 MAX

10 TYP STRUCT WOOD EXTERIOR CEILING / SOFFIT FRAMING

SCALE: NTS

S-_061000_T002A
180723. Q2

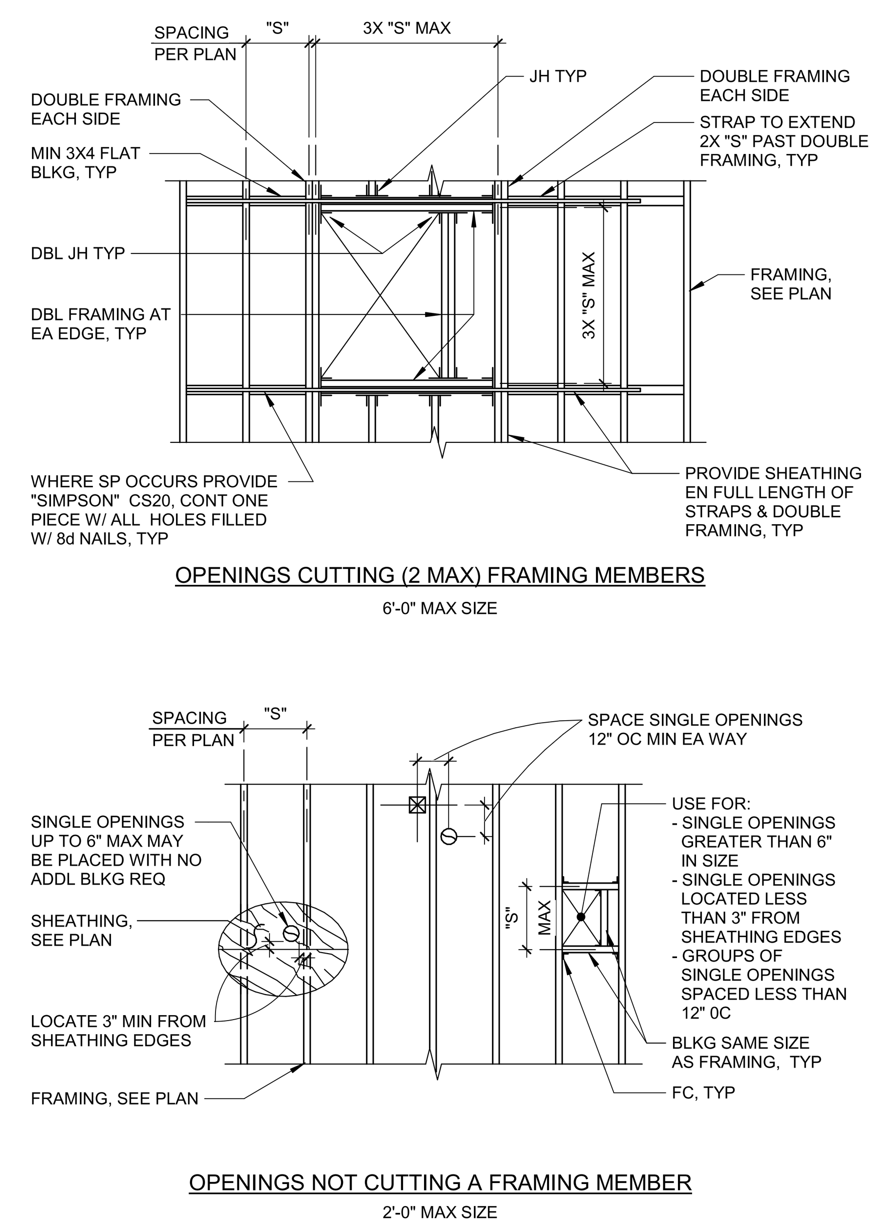

NOTE:
1. SHEATHING REFERS TO GYPSUM BOARD OR SP

14 TYP WOOD ROOF / FLOOR / CEILING FRAMING AT OPENINGS

SCALE: NTS

S-_061010_T010A
140127. Q2

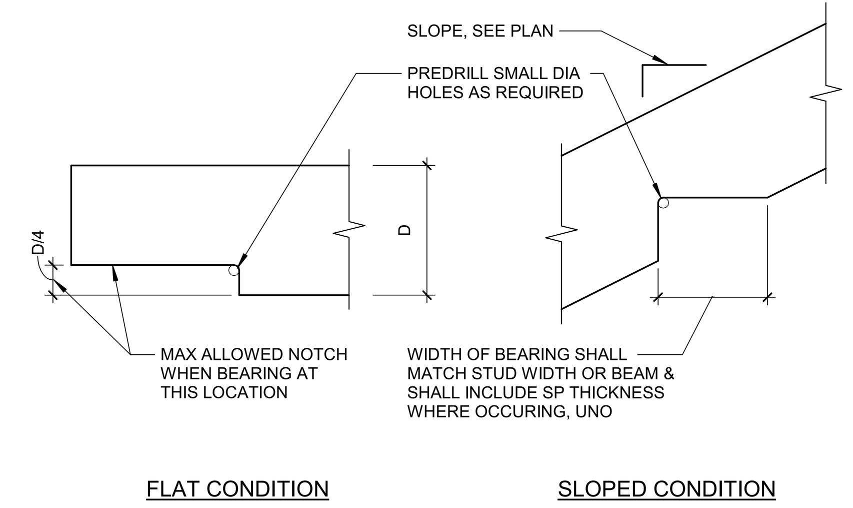

NOTES:
1. OVERCUTTING IS NOT PERMITTED. ALL CUTS SHALL INTERSECT DRILLED HOLE WHEN USED.
2. BEARING CUTS SHALL OCCUR ONLY WHERE SPECIFICALLY DETAILED ON THE DRAWINGS.
3. CUTS OR DRILLED HOLES SHALL NOT INTERSECT ANY LOOSE KNOTS.

17 TYP BEARING CUT IN JOIST / RAFTER

SCALE: NTS

S-_061010_T007A
140127. Q2

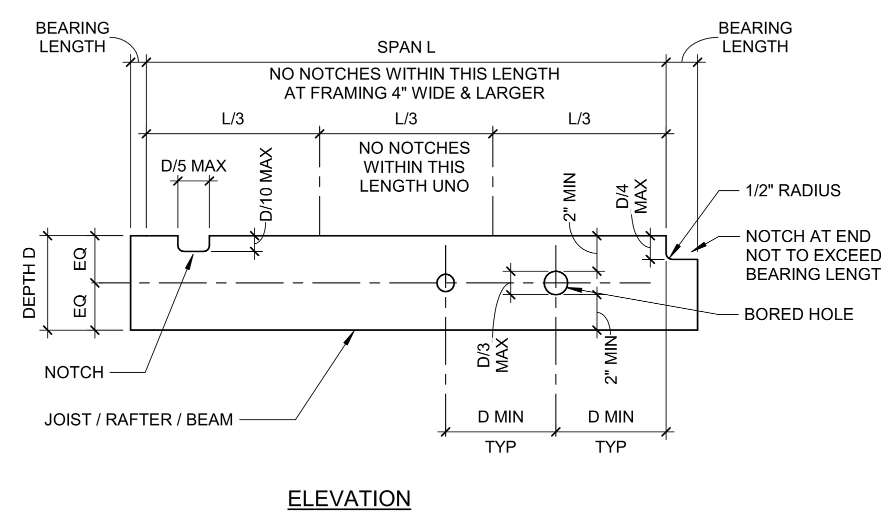

NOTE:
1. PREDRILL SMALL DIA HOLE AT ALL CORNERS OF NOTCHES. ALL CUTS SHALL INTERSECT PREDRILLED HOLE. OVERCUTTING IS NOT PERMITTED.
2. NOTCHES IN THE BOTTOM OF JOISTS ALLOWED ONLY WHERE SPECIFICALLY DETAILED ON THE DRAWINGS.
3. IF JOIST / RAFTER / BEAM CANTILEVERS OR IS CONTINUOUS OVER MORE THAN ONE SPAN, NO NOTCHES ARE PERMITTED.

18 TYP HOLE OR NOTCH IN JOIST / RAFTER / BEAM

SCALE: NTS

S-_061010_T008A
160211. Q2

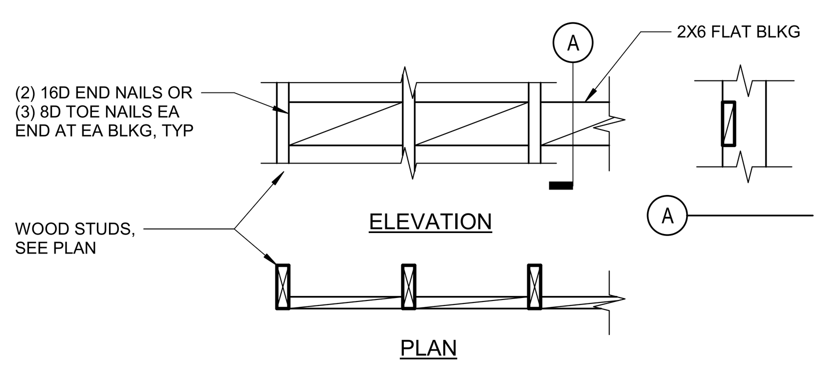

ATTACH ACCESSORIES TO BACKING WITH #10 WOOD SCREWS, MIN

USE FOR: MIRRORS, FLAT SIGNS, TACK BOARDS, CHALKBOARDS, BULLETIN BOARDS, MARKER BOARDS, FRAMED ARTWORK

TYPE A

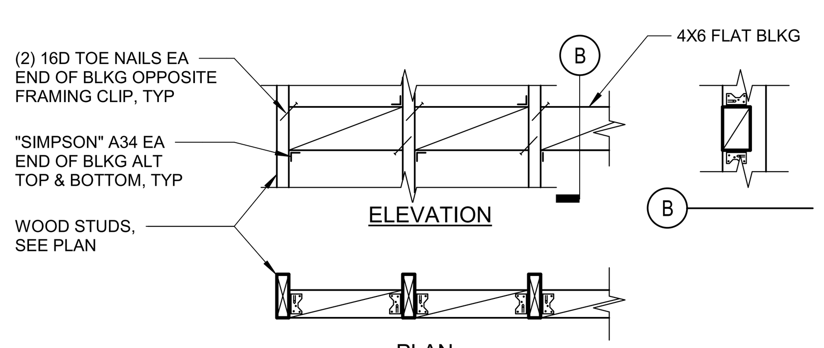

ATTACH ACCESSORIES TO BACKING WITH #12 WOOD SCREWS, MIN

USE FOR: TOILET & BATH ACCESSORIES UNO, DOOR STOPS, DOOR HOLDERS, CABINETS, DISPLAY CABINETS, TOILET PARTITIONS UNO

TYPE B

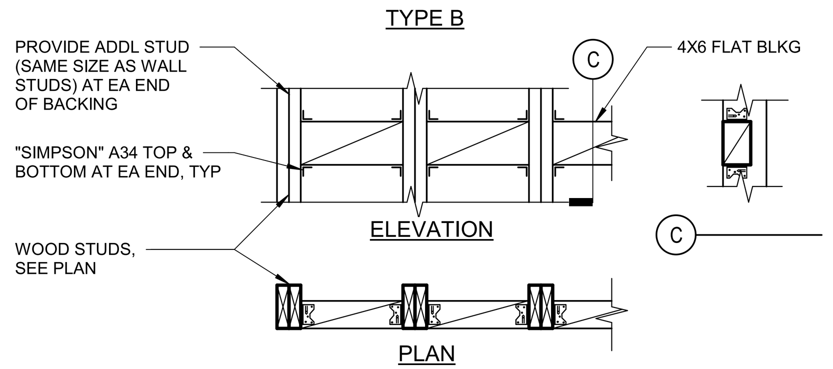

ATTACH ACCESSORIES TO BACKING WITH #14 OR 1/4" DIA WOOD SCREWS, MIN

USE FOR: HANDRAILS, GRAB BARS, SHOWER SEATS, SHELF BRACKETS, COUNTERTOP BRACKETS, URINAL SCREENS, WATER HEATER STRAPS, SINK BRACKETS

TYPE C

NOTES:
1. DO NOT CUT OR NOTCH STUDS TO INSTALL BACKING
2. VERIFY LENGTH, HEIGHT, QUANTITY & LOCATION OF BACKING WITH ARCHITECTURAL DETAILS AND ACCESSORY MANUFACTURER
3. EXTEND BACKING TO FIRST STUD PAST END OF ACCESSORY

4 TYP WOOD STUD WALL BACKING

3/4" = 1'-0"

SA_061000_T026A
180508. Q2

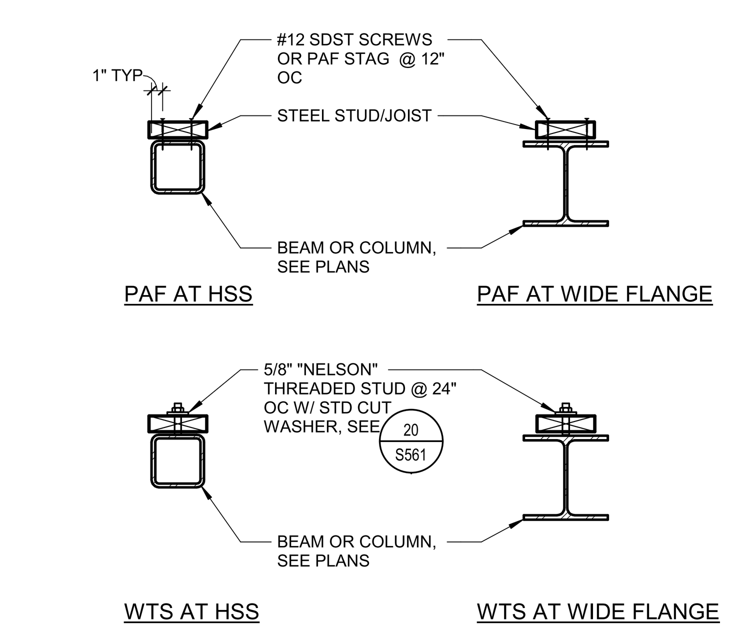

NOTES:
1. USE PAF CONN, TYP UNO
2. SIMILAR AT OTHER STEEL SHAPES

8 TYP WOOD STUD / JOIST CONNECTION TO STRUCTURAL STEEL

SCALE: NTS

S-_061000_T007A
180723. Q2

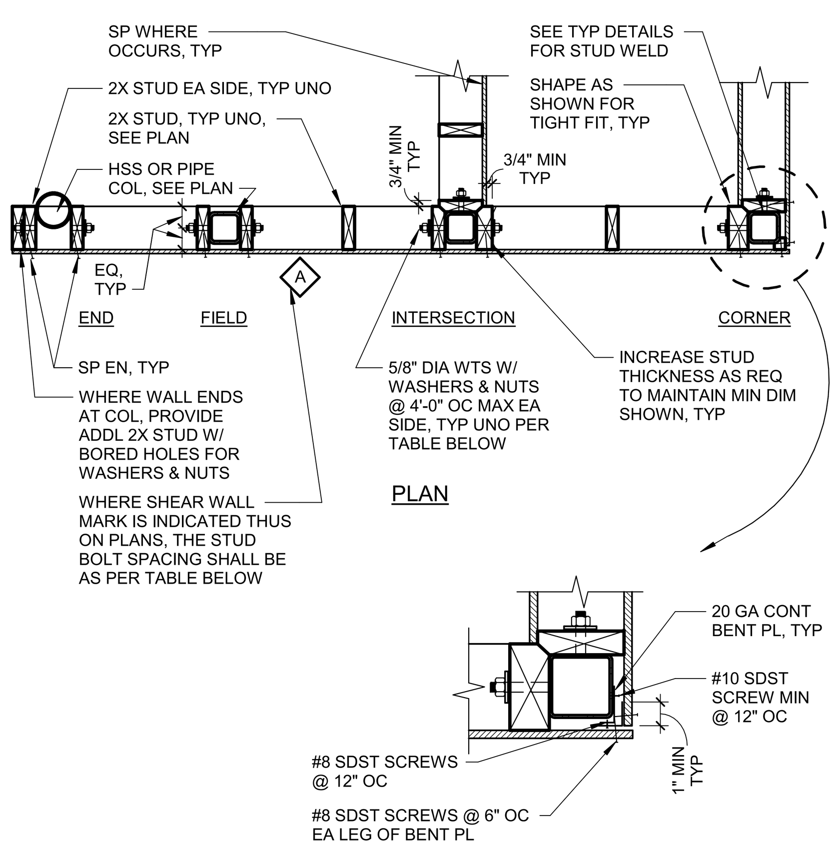

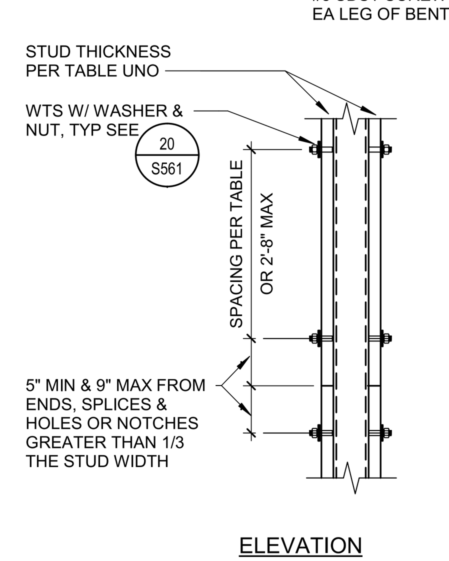

SHEAR WALL MARK	STUD THICKNESS EA SIDE OF COLUMN	5/8" DIA WELDED THREADED STUD SPACING
A	2X	2'-8" OC MAX
B	3X	2'-8" OC MAX
C	3X	2'-0" OC MAX
D	3X	1'-4" OC MAX
E	3X	1'-4" OC MAX
F	3X	8" OC MAX

12 TYP HSS / PIPE COL IN WOOD STUD WALL

SCALE: NTS

S-_061010_T025A
1808020. Q2

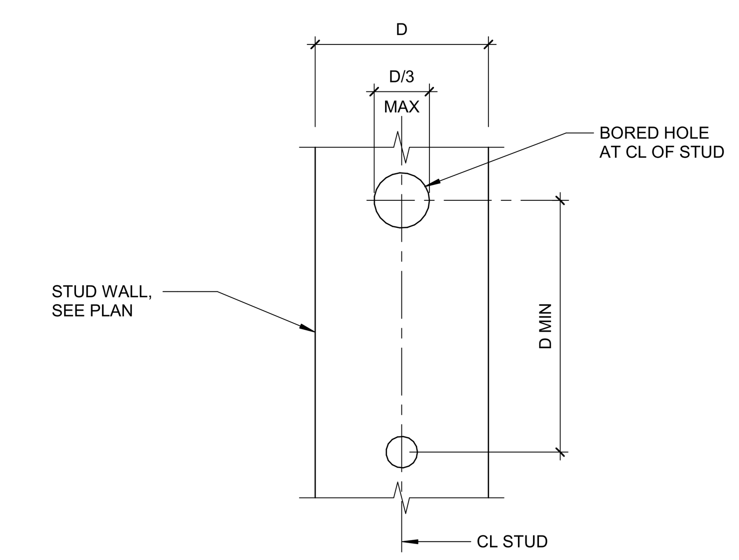

NOTE:
1. NOTCHES IN WALL STUDS ARE NOT ALLOWED.
2. HOLES NOT PERMITTED IN WALL FRAMING 4X AND THICKER.
3. LOCATE HOLES "D" MIN FROM ENDS OF STUDS.

15 TYP HOLE IN WALL STUD

SCALE: NTS

S-_061010_T030A
140127. Q2

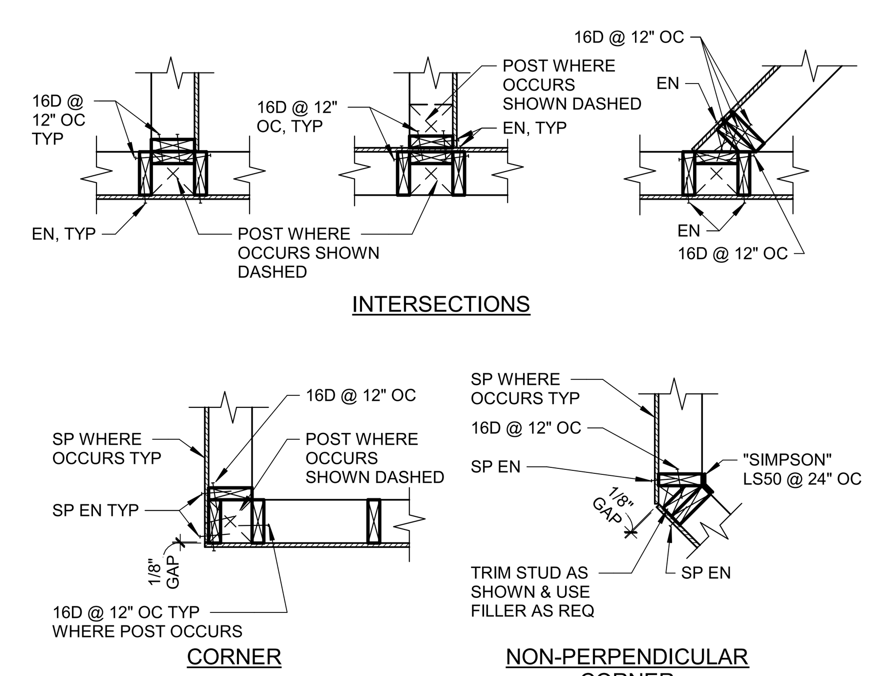

16 TYP WOOD STUD WALL FRAMING AT CORNERS & INTERSECTION

SCALE: NTS

S-_061010_T028A
140127. Q2

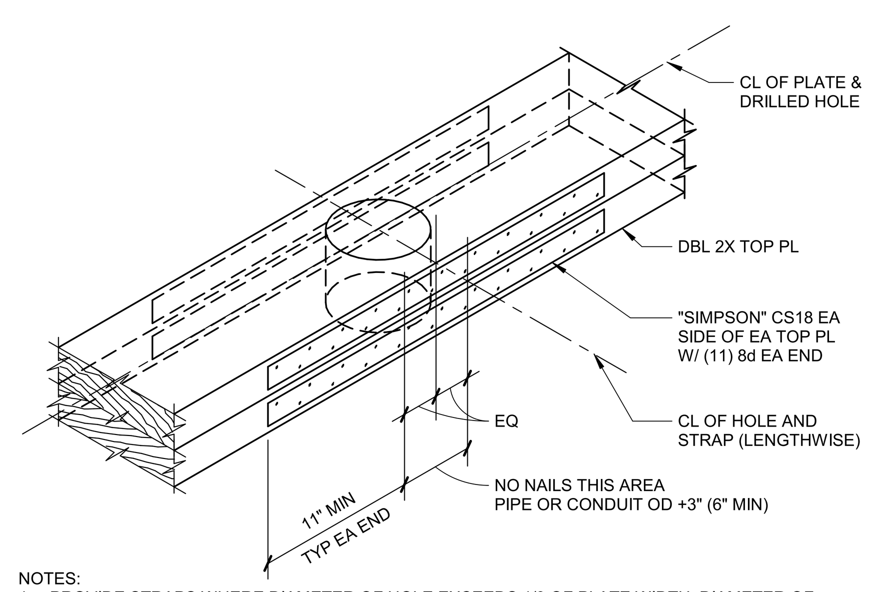

NOTES:
1. PROVIDE STRAPS WHERE DIAMETER OF HOLE EXCEEDS 1/3 OF PLATE WIDTH. DIAMETER OF HOLE SHALL NOT EXCEED 2/3 OF PLATE WIDTH.
2. NO NOTCHES PERMITTED AT TOP PLATES.
3. DO NOT LOCATE HOLES WITHIN 4'-0" EA SIDE OF TOP PLATE SPLICES.
4. IF HOLES OCCUR WITHIN A STUD BAY IN WHICH A JOIST OR TRUSS LANDS, ADD A STUD DIRECTLY BELOW THE JOIST OR TRUSS.

20 TYP PLATE REINFORCING AT PIPE OR CONDUIT

SCALE: NTS

S-_061010_T033A
140127. Q2

IDENTIFICATION STAMP
DIV. OF THE STATE ARCHITECT
APP: 02-118630 INC:
REVIEWED FOR
SS ☐ FLS ☐ ACS ☑
DATE: 04/13/2021

OFFICE OF THE STATE FIRE MARSHAL
APPROVED FIRE AND PANIC ONLY
Approval of this plan does not authorize or approve any omission or deviation from applicable regulations. Final approval is subject to field inspection. One set of approved plans shall be available on the project site at all times.
PERMIT NO.: 20-N-2332-CP
REVIEWED BY: LITO CATAYLO, OSFM
DATE: 4/1/2021

DGS
GENERAL SERVICES
Department of General Services
State of California
Real Estate Services Division
Project Management & Development Branch
707 Third Street, Suite 4-105
West Sacramento, California 95605

NM&R
NICHOLS MELBURG & ROSSETTO
ARCHITECTS + ENGINEERS
300 Knollcrest Drive
Redding, CA. 96002
(530) 222-3300 (530) 222-3538 FAX
http://www.nmrdesign.com

Copyright © 2021
All ideas, designs, arrangements and plans indicated or represented by this drawing are owned by, and the property of, NICHOLS, MELBURG and ROSSETTO and were created, evolved and developed for use on, and in conjunction with, the specified project. None of such ideas, designs, arrangements or plans shall be used by, or disclosed to any person, firm or corporation for any purpose whatsoever without the written permission of NICHOLS, MELBURG and ROSSETTO.

LICENSE STAMPS
REGISTERED PROFESSIONAL ENGINEER
DARRON E. HUNTINGDALE
No. S4788
STRUCTURAL
STATE OF CALIFORNIA
3/19/2021

STRUCTURAL CONSULTANT
LIONAKIS
1919 Nineteenth Street
Sacramento CA 95811
P 916.558.1900 F 916.558.1919
www.lionakis.com

DRAWING STATUS
CONSTRUCTION DOCUMENTS

ISSUE

No.	Date	Description
1	10/22/2020	INITIAL PLAN REVIEW
2	01/08/2021	AGENCY RESUBMITTAL
3	03/22/2021	AGENCY RESUBMITTAL

If drawing is not 30" x 42" it is a reduced print

PROJECT
RESIDENTIAL CENTER, UKIAH: REPLACEMENT OF EXISTING RESIDENTIAL CENTER
440 EAST HILL ROAD
WILLITS, CALIFORNIA 95490
MENDOCINO COUNTY
CALIFORNIA CONSERVATION CORP

Supervisor | Designed | Drawn: Author

DSA Application No.
02-118630

SHEET TITLE
DETAILS - TYPICAL WOOD FRAMING

DGS Project Number: 000000000001826
Lionakis Project Number: 018322

Reference North: NORTH
Sheet Scale: As indicated
Sheet Number: S562

ISSUE DATE
July 9, 2021

Plot Date: 3/19/2021 11:24:25 AM
File Name: BIM 360://CCC Willits Residential Center/018322_S-MASTER_R18_CENTRAL.rvt

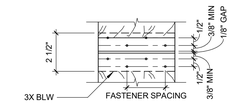

3" NOMINAL - (2) LINES OF FASTENERS

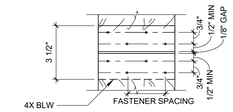

4" NOMINAL - (2) LINES OF FASTENERS

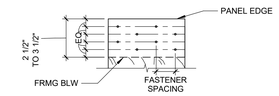

BOUNDARY FASTENING - (2) LINES OF FASTENERS

9 TYP NAILING AT SP JOINTS - HIGH LOAD DIAPHRAGM - (2) LINES OF FASTENERS

3" = 1'-0"

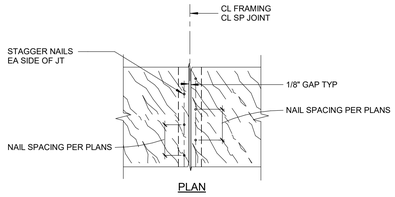

PLAN

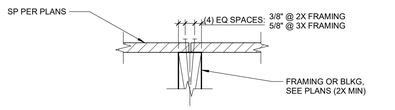

SECTION

13 TYP NAILING AT STRUCTURAL PANEL JOINTS

3" = 1'-0"

S-_061010_T024A
140127. Q2

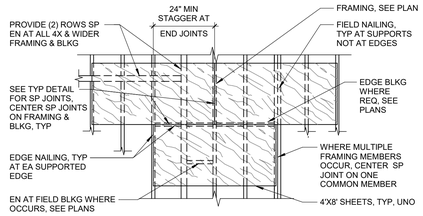

NOTES:
1. SEE PLANS FOR DIAPHRAGM NAILING SCHEDULE, NAIL SIZE, SPACING & SP.
2. NO PANEL LESS THAN 24" IN ANY DIMENSION SHALL BE USED, ADJUST LAYOUT AS NEEDED.
3. WHERE PLAN CALLS FOR EDGE BLOCKING, USE THE FOLLOWING:
   FOR 8D SP NAILING, USE 2X4 FLAT W/ "SIMPSON" Z28 EA END W/ (2) 10DX1 1/2"
   FOR 10D SP NAILING, USE 3X4 FLAT W/ "SIMPSON" Z38 EA END W/ (2) 10DX1 1/2"
   OR FASTEN BLOCKING NOTED TO FRAMING PER NAILING SCHEDULE.
4. ALL SIDE JOINTS SHALL EITHER HAVE EDGE BLOCKING, T&G EDGES, OR (1) "SIMPSON" PSCL/PSCA PER SPAN AT CENTER OF SPAN

17 TYP STRUCTURAL PANEL LAYOUT - ROOF / FLOOR

1/4" = 1'-0"

S-_061010_T022A
140127. Q2

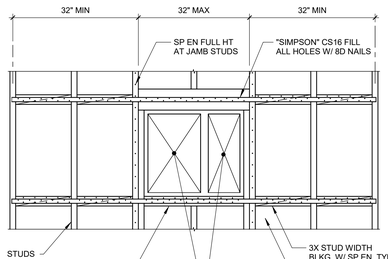

14 TYP DUCT OPENING AT SHEAR WALL

3/4" = 1'-0"

S-_061010_T013A
140127. Q2

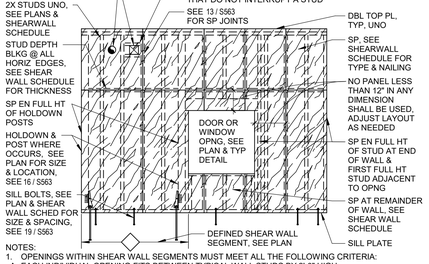

NOTES:
1. OPENINGS WITHIN SHEAR WALL SEGMENTS MUST MEET ALL THE FOLLOWING CRITERIA:
   A. EACH INDIVIDUAL OPENING FITS BETWEEN TYPICAL WALL STUDS BY 2'-0" HIGH.
   B. TOTAL COMBINED OPENING HEIGHT OF ALL OPENINGS IN ANY VERTICAL STRIP IN A SHEAR WALL SEMGENT DOES NOT EXCEED 15 PERCENT OF THE OVERALL SHEAR WALL SEGMENT HEIGHT.
   C. TOTAL COMBINED OPENING WIDTH OF ALL OPENINGS IN ANY HORIZONTAL STRIP IN A SHEAR WALL SEMGENT DOES NOT EXCEED 15 PERCENT OF THE OVERALL SHEAR WALL SEGMENT LENGTH.
   D. CLEAR DISTANCE BETWEEN ADJACENT OPENINGS TO MATCH DIMENSION OF LARGEST ADJACENT OPENING. WHERE CLEAR DISTANCE BETWEEN OPENINGS CAN NOT BE MET, COMBINED OPENINGS SHALL BE TREATED AS A SINGLE LARGE OPENING.
   E. CLEAR DISTANCE FROM OPENING TO EDGE OF SHEAR WALL SEGMENT TO BE AT LEAST 3X OPENING SIZE IN BOTH HORIZONTAL AND VERTICAL DIRECTIONS.

18 TYP SP LAYOUT - SHEAR WALL

1/4" = 1'-0"

S-_061010_T023A

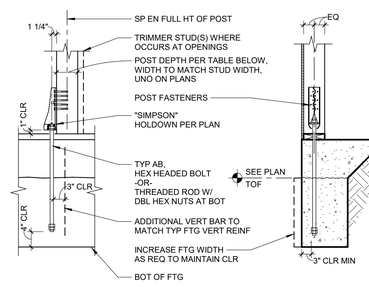

ELEVATION SECTION

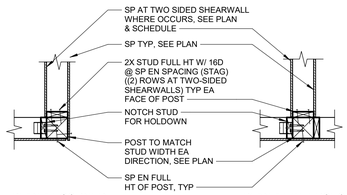

PLAN AT CORNER PLAN AT INTERSECTION

"SIMPSON" DESIGNATION	AB DIA	POST FASTENERS	POST DEPTH UNO
HDU2	5/8"	(6) SDS 1/4"X2 1/2"	(2) 2X
HDU4	5/8"	(10) SDS 1/4"X2 1/2"	(2) 2X
HDU5	5/8"	(14) SDS 1/4"X2 1/2"	(2) 2X
HDU8	7/8"	(20) SDS 1/4"X2 1/2"	6X
HDU11	1"	(30) SDS 1/4"X2 1/2"	8X
HDU14	1" W/ HEAVY HEX NUT	(36) SDS 1/4"X2 1/2"	8X
HD19	1 1/4" W/ HEAVY HEX NUT	(5) 1" DIA STUD BOLTS	8X

NOTES:
1. MULTIPLE MEMBERS AT POSTS SHALL BE INTERCONNECTED WITH 16D @ 6" OC MAX, STAGGERED, FULL HEIGHT.
2. WHEN HOLDOWN & POST ARE INDICATED PER PLAN AT OPENING JAMBS, THE POST SHALL REPLACE THE KING STUDS REQ IN "TYP FRAMING AT OPENINGS" DETAIL.
3. AT HD19, AB'S SHALL BE ASTM F1554, GR 105 W/ EMBEDMENT PER DETAIL 20/S563. FOR OTHER LOCATIONS WHERE DETAIL 20/S563 OCCURS, SEE PLANS

16 TYP HDU HOLDOWN

3/4" = 1'-0"

S-_061010_T017A
190225. Q2

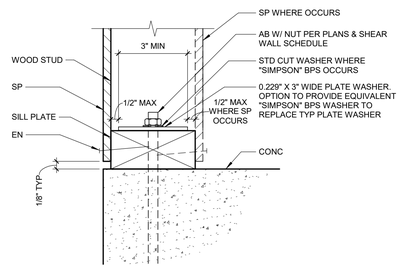

19 TYP SHEAR WALL SILL BOLT

3" = 1'-0"

S-_061010_T056A
190225. Q2

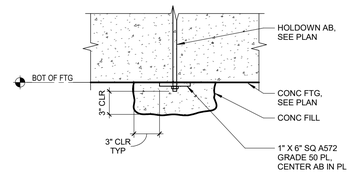

20 DETAIL

1" = 1'-0"

Q1

Plot Date: 3/19/2021 11:34:27 AM
File Name: BIM 360://CC/ Willits Residential Center/018322_S-MASTER_R18_CENTRAL.rvt

IDENTIFICATION STAMP
DIV. OF THE STATE ARCHITECT
APP: 02-118630 INC:
REVIEWED FOR
SS ☐ FLS ☐ ACS ☑
DATE: 04/13/2021

OFFICE OF THE STATE FIRE MARSHAL
APPROVED FIRE AND PANIC ONLY
Approval of this plan does not authorize or approve any omission or deviation from applicable regulations. Final approval is subject to field inspection. One set of approved plans shall be available on the project site at all times.
PERMIT NO: 20-N-2332-CP
REVIEWED BY: LEO CATAYLO, OSFM
DATE: 4 / /2021

GENERAL SERVICES
Department of General Services
State of California
Real Estate Services Division
Project Management & Development Branch
707 Third Street, Suite 4-105
West Sacramento, California 95605

NICHOLS MELBURG & ROSSETTO ARCHITECTS + ENGINEERS
300 Knollcrest Drive
Redding, CA 96002
(530) 222-3300 (530) 222-3538 FAX
http://www.nmrdesign.com

Copyright © 2021
All ideas, designs, arrangements and plans indicated or represented by this drawing are owned by, and the property of, NICHOLS, MELBURG and ROSSETTO and were created, evolved and developed for use on, and in conjunction with, the specified project. None of such ideas, designs, arrangements or plans shall be used by, or disclosed to any person, firm or corporation for any purpose whatsoever without the written permission of NICHOLS, MELBURG and ROSSETTO.

LICENSE STAMPS

REGISTERED PROFESSIONAL ENGINEER GEORGE E. HUNTINGFORD No. S47589 CIVIL STRUCTURAL STATE OF CALIFORNIA
3/19/2021

STRUCTURAL CONSULTANT

LIONAKIS
1919 Nineteenth Street
Sacramento CA 95811
P 916.558.1900 F 916.558.1919
www.lionakis.com

DRAWING STATUS
CONSTRUCTION DOCUMENTS

ISSUE

No.	Date	Description
1	10/22/2020	INITIAL PLAN REVIEW
2	01/08/2021	AGENCY RESUBMITTAL
3	03/22/2021	AGENCY RESUBMITTAL

If drawing is not 30" x 42" it is a reduced print

PROJECT
RESIDENTIAL CENTER, UKIAH: REPLACEMENT OF EXISTING RESIDENTIAL CENTER
440 EAST HILL ROAD
WILLITS, CALIFORNIA 95490
MENDOCINO COUNTY
CALIFORNIA CONSERVATION CORP

Supervisor	Designed	Drawn
		Author

DSA Application No.
02-118630

SHEET TITLE
DETAILS - TYPICAL WOOD SHEAR WALL FRAMING

DGS Project Number: 00000000001826
Lionakis Project Number: 018322

Reference North
Sheet Scale: As indicated
Sheet Number: S563

ISSUE DATE
July 9, 2021

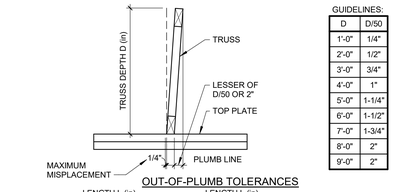

GUIDELINES:

D	D/50
1'-0"	1/4"
2'-0"	1/2"
3'-0"	3/4"
4'-0"	1"
5'-0"	1-1/4"
6'-0"	1-1/2"
7'-0"	1-3/4"
8'-0"	2"
9'-0"	2"

OUT-OF-PLUMB TOLERANCES

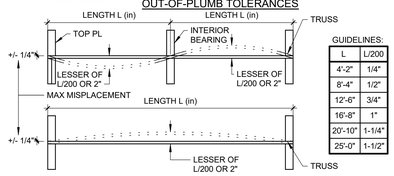

GUIDELINES:

L	L/200
4'-2"	1/4"
8'-4"	1/2"
12'-6"	3/4"
16'-8"	1"
20'-10"	1-1/4"
25'-0"	1-1/2"

OUT-OF-PLANE TOLERANCES

1 TRUSS TOLERANCE

1" = 1'-0"

Q1

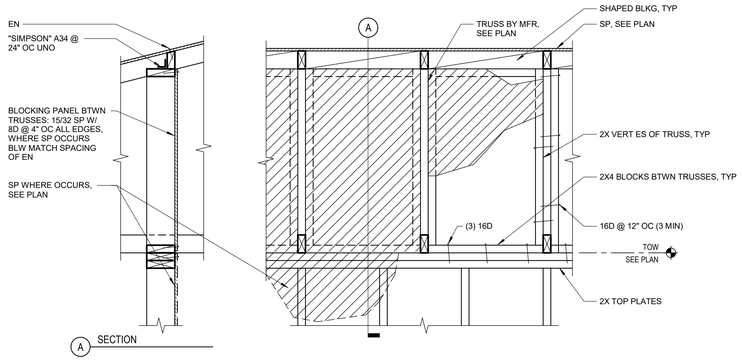

5 DETAIL

1" = 1'-0"

S-_061930_C152A
140127. Q1

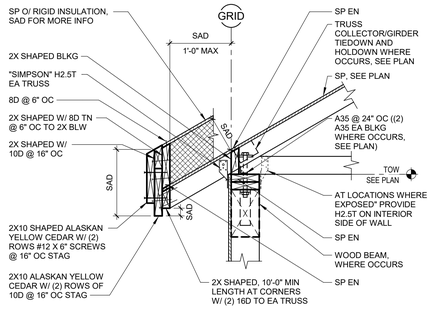

13 TYP TRUSS W/ OUTRIGGER

1" = 1'-0"

Q1

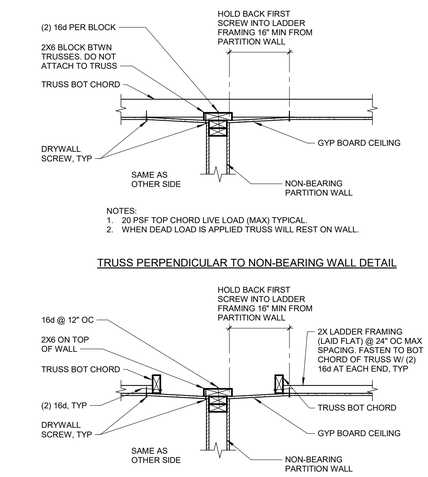

NOTES:
1. 20 PSF TOP CHORD LIVE LOAD (MAX) TYPICAL.
2. WHEN DEAD LOAD IS APPLIED TRUSS WILL REST ON WALL.

TRUSS PERPENDICULAR TO NON-BEARING WALL DETAIL

WARNING: VARIATION FROM THESE DETAILS MAY CAUSE DRYWALL CRACK AT INTERIOR PARTITIONS AND OTHER LOCATIONS.

TRUSS PARALLEL TO NON-BEARING WALL DETAIL

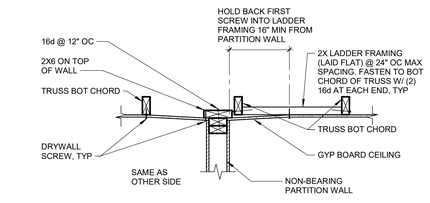

TRUSS PARALLEL TO NON-BEARING WALL DETAIL

NOTES:
1. FOR CONDITIONS WHERE GYP BOARD CEILING DOES NOT OCCUR SEE (4 / S564)

3 TRUSS AT PARTITION WALLS

1" = 1'-0"

Q1

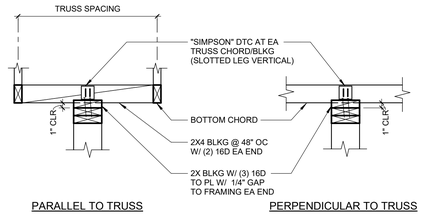

PARALLEL TO TRUSS

PERPENDICULAR TO TRUSS

4 TYP INTERIOR NON- STRUCTURAL WALL ANCHORAGE AT WOOD TRUSSES

1" = 1'-0"

S-_061930_T150A
140127. Q2

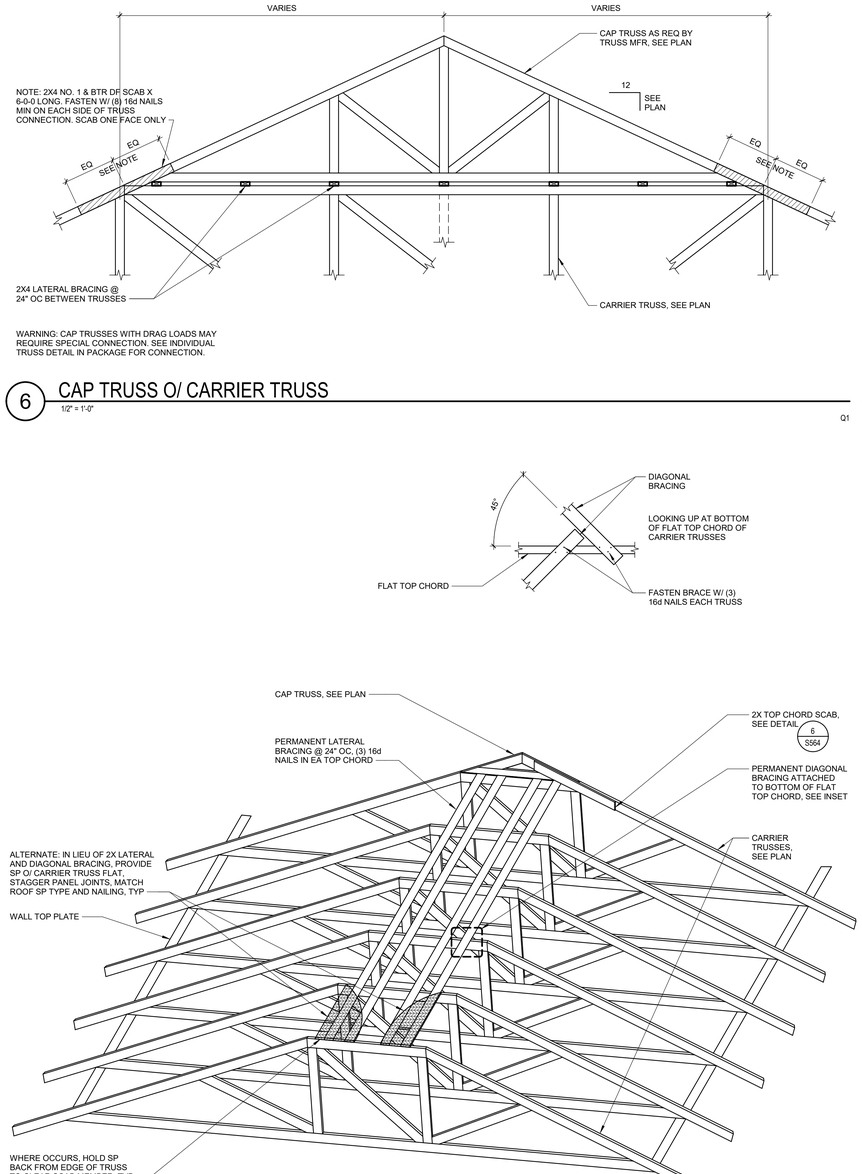

WARNING: CAP TRUSSES WITH DRAG LOADS MAY REQUIRE SPECIAL CONNECTION. SEE INDIVIDUAL TRUSS DETAIL IN PACKAGE FOR CONNECTION.

6 CAP TRUSS O/ CARRIER TRUSS

1/2" = 1'-0"

Q1

8 CARRIER TRUSS TOP PL BRACING

1/2" = 1'-0"

Q1

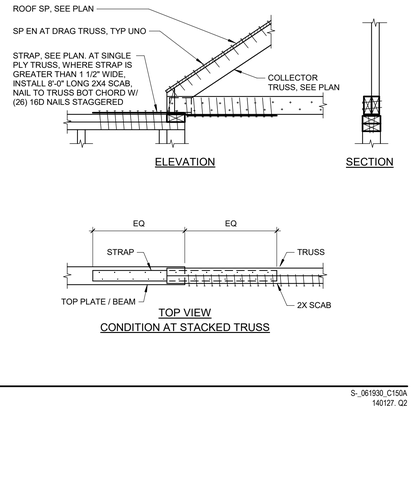

TOP VIEW
CONDITION AT OFFSET TRUSS

TOP VIEW
CONDITION AT STACKED TRUSS

14 DETAIL

1" = 1'-0"

S-_061930_C150A
140127. Q2

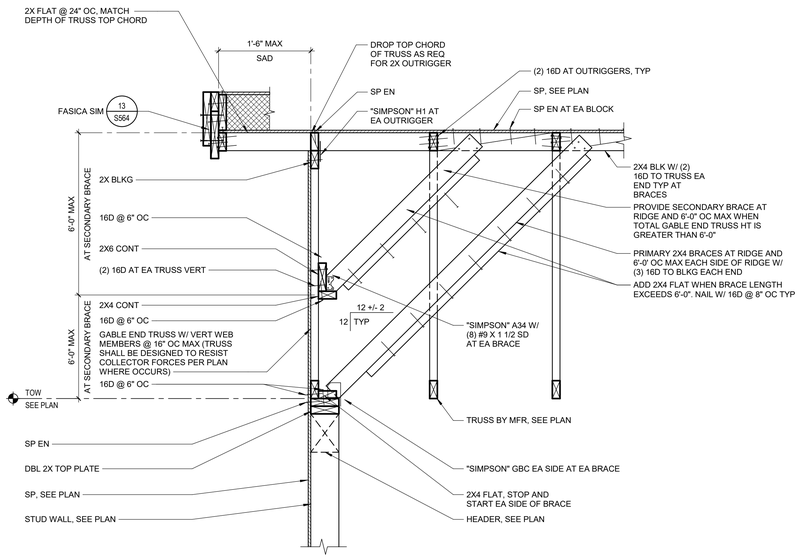

NOTE:
1. SEE PLAN FOR LOCATIONS WHERE VENT OCCURS AT GABLE END, COORDINATE WEB MEMBERS AND BRACE LOCATIONS AS REQUIRED

16 DETAIL

1" = 1'-0"

S-_061930_C155A
140127. Q2

IDENTIFICATION STAMP
DIV. OF THE STATE ARCHITECT
APP: 02-118630 INC:
REVIEWED FOR
SS ☐ FLS ☐ ACS ☑
DATE: 04/13/2021

OFFICE OF THE STATE FIRE MARSHAL
APPROVED FIRE AND PANIC ONLY
Approval of this plan does not authorize or approve any omission or deviation from applicable regulations. Final approval is subject to field inspection. One set of approved plans shall be available on the project site at all times.
PERMIT NO. 20-N-2332-CP
REVIEWED BY: LEO CATAYLO, OSFM
DATE: 4 / /2021

DGS GENERAL SERVICES
Department of General Services
State of California
Real Estate Services Division
Project Management & Development Branch
707 Third Street, Suite 4-105
West Sacramento, California 95605

NICHOLS MELBURG & ROSSETTO ARCHITECTS + ENGINEERS
300 Knollcrest Drive
Redding, CA 96002
(530) 222-3300 (530) 222-3538 FAX
http://www.nmrdesign.com

Copyright © 2021
All ideas, designs, arrangements and plans indicated or represented by this drawing are owned by, and the property of, NICHOLS, MELBURG and ROSSETTO and were created, evolved and developed for use on, and in conjunction with, the specified project. None of such ideas, designs, arrangements or plans shall be used by, or disclosed to any person, firm or corporation for any purpose whatsoever without the written permission of NICHOLS, MELBURG and ROSSETTO.

LICENSE STAMPS

REGISTERED PROFESSIONAL ENGINEER SIMON E. HUNTINGTON No. S47799 STRUCTURAL STATE OF CALIFORNIA
3/19/2021

STRUCTURAL CONSULTANT

LIONAKIS
1919 Nineteenth Street
Sacramento CA 95811
P 916.558.1900 F 916.558.1919
www.lionakis.com

DRAWING STATUS
CONSTRUCTION DOCUMENTS

ISSUE

No.	Date	Description
1	10/22/2020	INITIAL PLAN REVIEW
2	01/08/2021	AGENCY RESUBMITTAL
3	03/22/2021	AGENCY RESUBMITTAL

If drawing is not 30" x 42" it is a reduced print

PROJECT
RESIDENTIAL CENTER, UKIAH: REPLACEMENT OF EXISTING RESIDENTIAL CENTER
440 EAST HILL ROAD
WILLITS, CALIFORNIA 95490
MENDOCINO COUNTY
CALIFORNIA CONSERVATION CORP

Supervisor	Designed	Drawn
		Author

DSA Application No.
02-118630

SHEET TITLE
DETAILS - TYPICAL WOOD TRUSS FRAMING

DGS Project Number	Lionakis Project Number
0000000000001826	018322

Reference North
Sheet Scale: As indicated
Sheet Number: S564

ISSUE DATE
July 9, 2021

Plot Date: 3/19/2021 11:24:27 AM
File Name: BIM 360://CCC Willits Residential Center/018322_S-MASTER_R18_CENTRAL.rvt

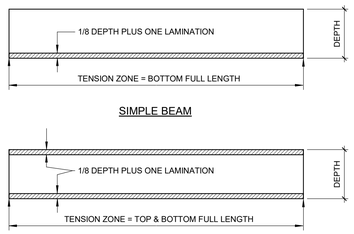

NOTE:
1. HATCHED AREA INDICATES ZONE OF REQUIRED 6" MIN END JOINT SPACING IN ADJACENT LAMINATIONS PER ANS1/AITC STANDARD A190.1

1 TYP GLU-LAM BEAM END JOINT SPACING

1" = 1'-0" S:_061800_T103A 140127. Q2

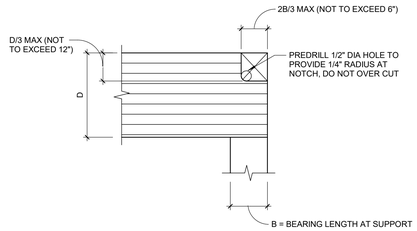

2 TYP NOTCH IN GLU-LAM BEAM

1" = 1'-0" S:_061800_T102A 140127. Q1

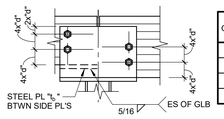

GLB WIDTH	BOLT DIA "d"	PL THICKNESS	
		"t$_{1/2}$"	"t$_s$"
3 1/8"	1/2"	1/2"	1/4"
5 1/8"	3/4"	3/4"	1/4"
6 3/4"	3/4"	1"	3/8"
8 3/4"	1"	1 1/4"	3/8"

CONDITION AT BEAM DEPTH CHANGE

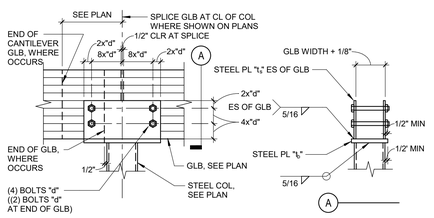

3 TYP GLB OVER COLUMN

1" = 1'-0" S:_061800_T101A 140127. Q2

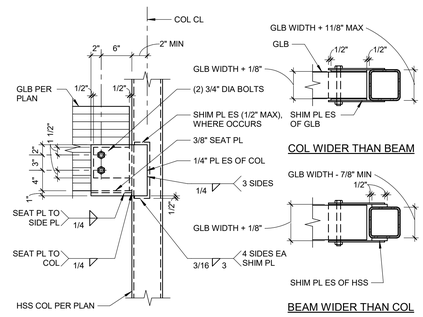

4 TYP GLB TO HSS COLUMN

1" = 1'-0" S:_061800_T100A 140127. Q2

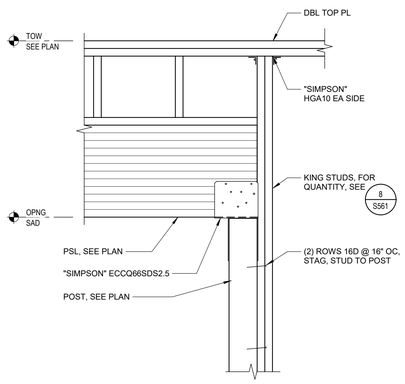

8 DETAIL

1" = 1'-0" Q1

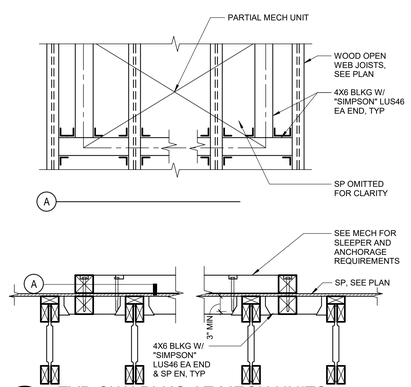

12 TYP OWJ BLKG AT MECH UNITS

1" = 1'-0" S:_061960_C202A

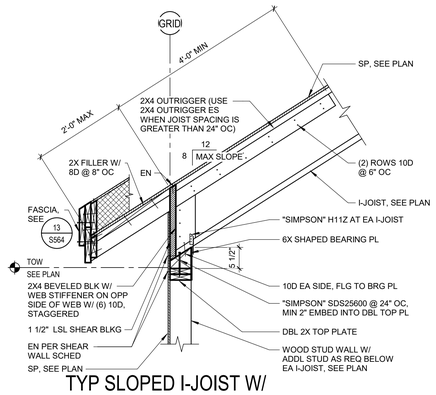

13 TYP SLOPED I-JOIST W/ OUTRIGGER (8:12)

3/4" = 1'-0" S:_061960_C211A 140127. Q2

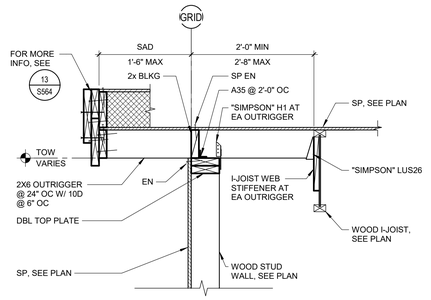

TYP FLAT I-JOIST PARALLEL TO WALL W/ OUTRIGGER

14

1" = 1'-0" S:_061960_C224A 140127. Q2

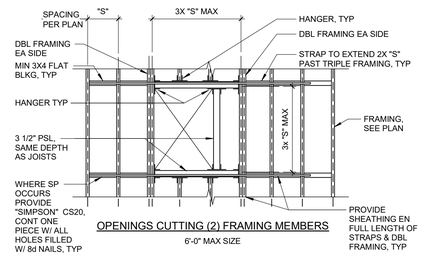

OPENINGS CUTTING (2) FRAMING MEMBERS

6'-0" MAX SIZE

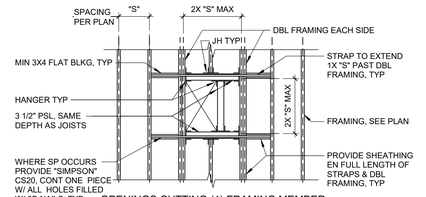

OPENINGS CUTTING (1) FRAMING MEMBER

4'-0" MAX SIZE

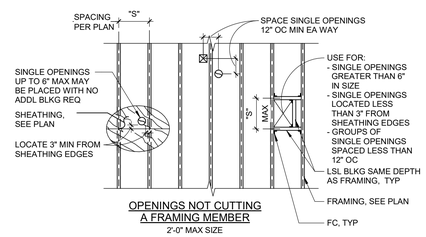

OPENINGS NOT CUTTING A FRAMING MEMBER

2'-0" MAX SIZE

NOTE:
1. SHEATHING REFERS TO GYPSUM BOARD OR SP

TYP I-JOIST ROOF / FLOOR / CEILING FRAMING AT OPENINGS

16

1/4" = 1'-0" S:_061960_T203A 140127. Q2

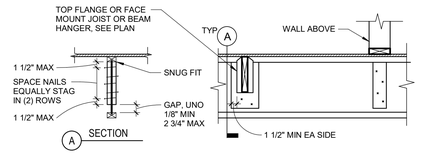

STIFFENERS AT CONCENTRATED LOADS

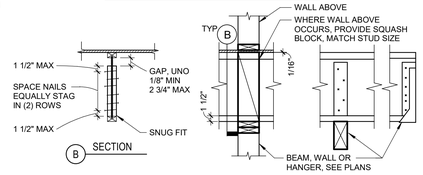

STIFFENERS AT BEARINGS

WEB STIFFENER SIZE AND MATERIAL		
FLANGE WIDTH	WEB STIFFENER SIZE_UNO	WEB STIFFENER MATERIAL
1 3/4"	5/8" X 2 5/16"	SHEATHING (WITH FACE GRAIN VERTICAL) THAT MEETS THE REQUIREMENTS OF PS1 OR PS2
2 1/2"	1" X 2 5/16"	
3 1/2"	2x4	CONSTRUCTION GRADE OR BETTER RED-I90HS JOISTS REQUIRE LVL / LSL

NAILING QUANTITIES FOR WEB STIFFENER ATTACHMENT					
I-JOIST DEPTH	RED-I45 JOISTS	RED-I65 JOISTS	RED-I90 & RED-I90H JOISTS		RED-I90HS JOISTS
	8D NAILS	8D NAILS	16D NAILS		16D NAILS
	END OR INTERMEDIATE	END OR INTERMEDIATE	END	INTERMEDIATE	END OR INTERMEDIATE
9 1/2"	3	N/A	N/A	N/A	N/A
11 7/8"	3	3	3	3	4
14"	3	5	3	3	6
16"	3	6	4	4	6
18"	3	7	4	4	8
20"	3	8	5	5	10
22"	N/A	9	6	11	10
24"	N/A	10	6	13	12
26"	N/A	11	7	14	14
28"	N/A	12	8	15	14
30"	N/A	13	8	17	16
32"	N/A	N/A	9	18	18

NOTES:
1. WEB STIFFENERS REQUIRED EA SIDE OF I-JOISTS AT ALL BEARING POINTS AND CONCENTRATED POINT LOADS.
2. WEB STIFFENERS SHALL REMAIN VERTICAL AT SLOPED I-JOISTS (CONDITION NOT SHOWN).

TYP I-JOIST WEB STIFFENERS

18

3/4" = 1'-0" S:_061960_T211A 140127. Q2

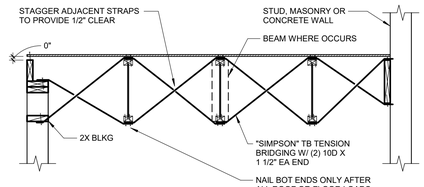

AT WALL W/ DBL TOP PL

AT WALL W/ LEDGER

NOTE:
1. ALL I-JOISTS REQUIRE BRIDGING PER MFR REQUIREMENTS

TYP I-JOIST BRIDGING

19

3/4" = 1'-0" S:_061960_T202A 140127. Q2

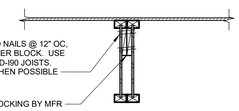

TYP MULTIPLE I-JOISTS

20

1" = 1'-0" S:_061960_T207A 160711. Q2

IDENTIFICATION STAMP
DIV. OF THE STATE ARCHITECT
APP: 02-118630 INC:
REVIEWED FOR
SS ☐ FLS ☐ ACS ☑
DATE: 04/13/2021

OFFICE OF THE STATE FIRE MARSHAL
APPROVED FIRE AND PANIC ONLY
Approval of this plan does not authorize or approve any omission or deviation from applicable regulations. Final approval is subject to field inspection. One set of approved plans shall be available on the project site at all times.
PERMIT NO. 20-N-2332-CP
REVIEWED BY: LEO CATAYLO, OSFM
DATE: 4 / /2021

DGS GENERAL SERVICES
Department of General Services
State of California
Real Estate Services Division
Project Management & Development Branch
707 Third Street, Suite 4-105
West Sacramento, California 95605

NICHOLS MELBURG & ROSSETTO ARCHITECTS + ENGINEERS
300 Knollcrest Drive
Redding, CA 96002
(530) 222-3300 (530) 222-3538 FAX
http://www.nmrdesign.com

Copyright © 2021
All ideas, designs, arrangements and plans indicated or represented by this drawing are owned by, and the property of, NICHOLS, MELBURG and ROSSETTO and were created, evolved and developed for use on, and in conjunction with, the specified project. None of such ideas, designs, arrangements or plans shall be used by, or disclosed to any person, firm or corporation for any purpose whatsoever without the written permission of NICHOLS, MELBURG and ROSSETTO.

LICENSE STAMPS

STRUCTURAL CONSULTANT

LIONAKIS
1919 Nineteenth Street
Sacramento CA 95811
P 916.558.1900 F 916.558.1919
www.lionakis.com

DRAWING STATUS
CONSTRUCTION DOCUMENTS

ISSUE

No.	Date	Description
1	10/22/2020	INITIAL PLAN REVIEW
2	01/08/2021	AGENCY RESUBMITTAL
3	03/22/2021	AGENCY RESUBMITTAL

If drawing is not 30" x 42" it is a reduced print

PROJECT
RESIDENTIAL CENTER, UKIAH: REPLACEMENT OF EXISTING RESIDENTIAL CENTER
440 EAST HILL ROAD
WILLITS, CALIFORNIA 95490
MENDOCINO COUNTY
CALIFORNIA CONSERVATION CORP

Supervisor	Designed	Drawn
		Author

DSA Application No.
02-118630

SHEET TITLE
DETAILS - TYPICAL MANUFACTURED LUMBER FRAMING

DGS Project Number	Lionakis Project Number
000000000001826	018322

Reference North
Sheet Scale: As indicated
Sheet Number: S565

ISSUE DATE
July 9, 2021

Plot Date: 3/19/2021 11:24:30 AM
File Name: BIM 360://CCC Willits Residential Center/018322_S-MASTER_R18_CENTRAL.rvt

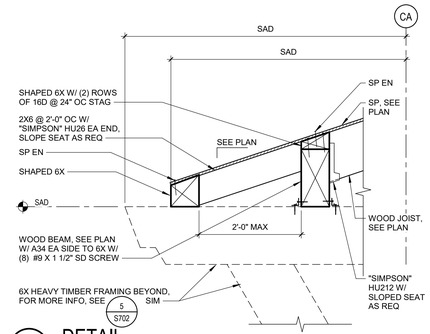

1 DETAIL
1" = 1'-0"
Q1

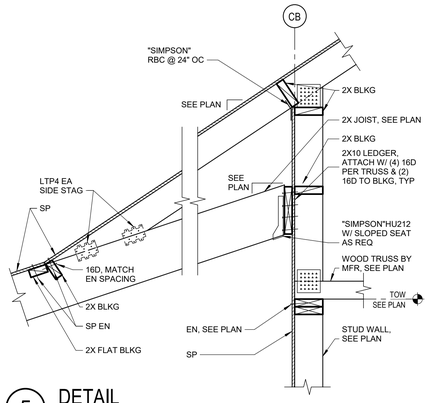

5 DETAIL
1" = 1'-0"
Q1

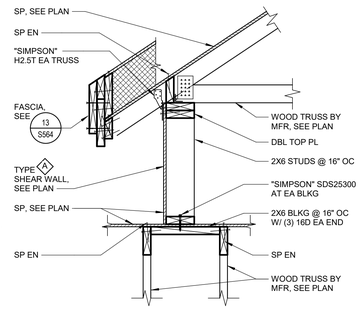

9 DETAIL
1" = 1'-0"
Q1

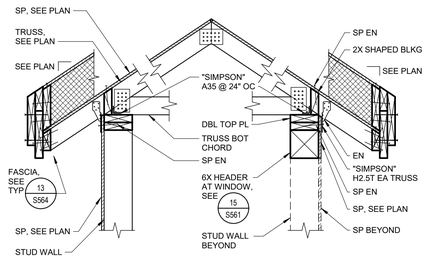

13 DETAIL
1" = 1'-0"
Q1

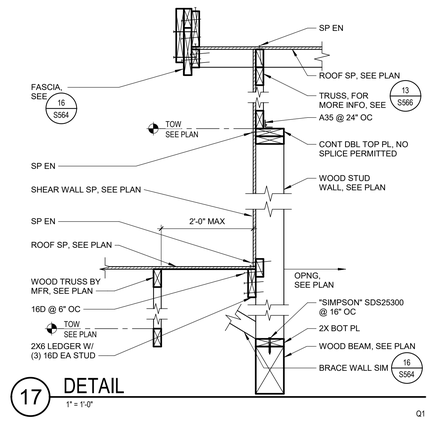

17 DETAIL
1" = 1'-0"
Q1

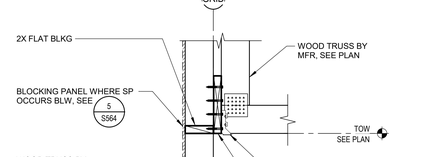

CONDITION BEYOND

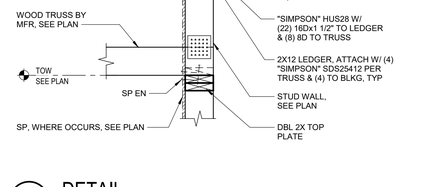

CONDITION AT BLOCKING PANEL

2 DETAIL
1" = 1'-0"
Q1

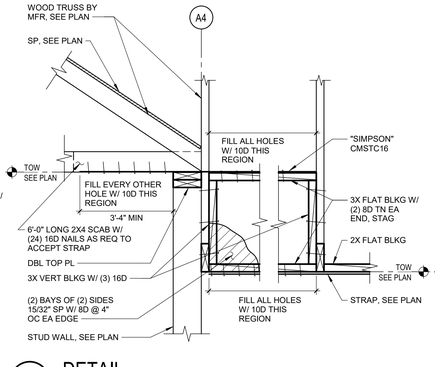

10 DETAIL
1" = 1'-0"
Q1

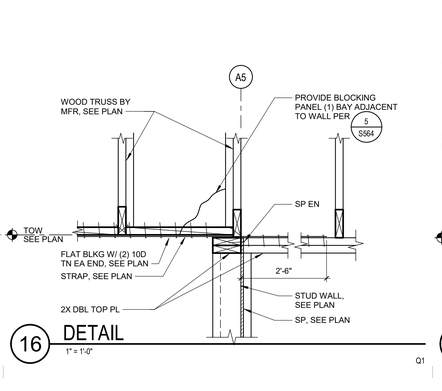

14 DETAIL
1" = 1'-0"
Q1

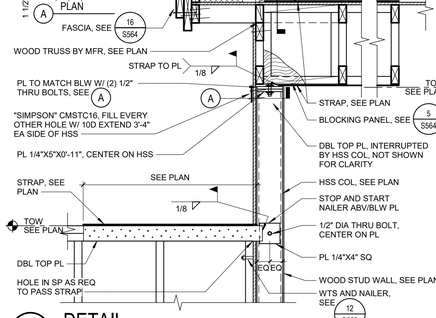

18 DETAIL
1" = 1'-0"
Q1

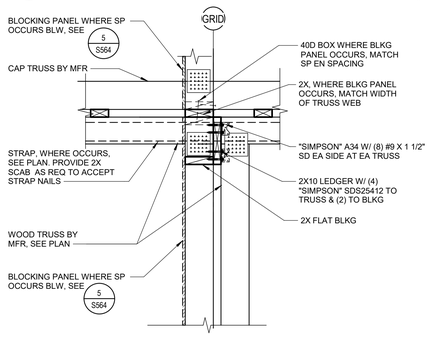

3 DETAIL
1" = 1'-0"
Q1

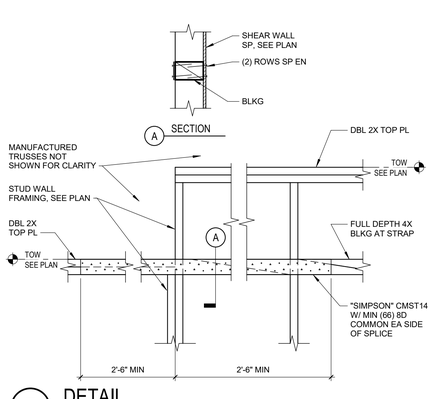

7 DETAIL
1" = 1'-0"
Q1

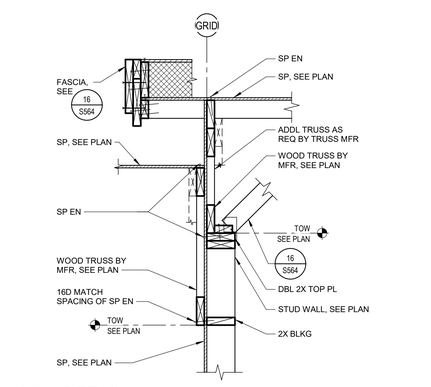

11 DETAIL
1" = 1'-0"
Q1

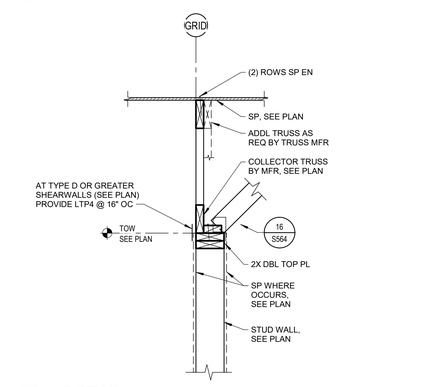

15 DETAIL
1" = 1'-0"
Q1

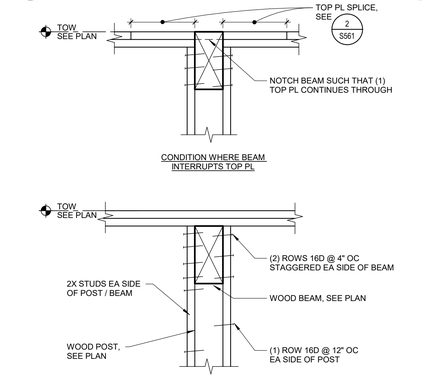

19 DETAIL
1" = 1'-0"
Q1

4 DETAIL
1" = 1'-0"
Q1

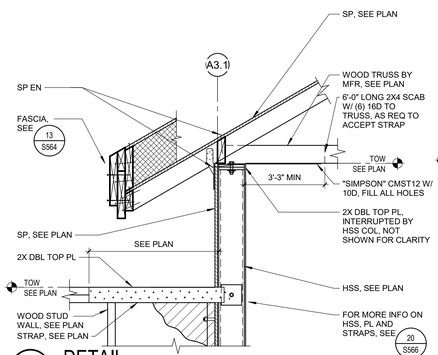

8 DETAIL
1" = 1'-0"
Q1

12 DETAIL
1" = 1'-0"
Q1

16 DETAIL
1" = 1'-0"
Q1

20 DETAIL
1" = 1'-0"
Q1

IDENTIFICATION STAMP
DIV. OF THE STATE ARCHITECT
APP: 02-118630 INC:
REVIEWED FOR
SS ☐ FLS ☐ ACS ☑
DATE: 04/13/2021

OFFICE OF THE STATE FIRE MARSHAL
APPROVED FIRE AND PANIC ONLY
Approval of this plan does not authorize or approve any omission or deviation from applicable regulations. Final approval is subject to field inspection. One set of approved plans shall be available on the project site at all times.
PERMIT NO. 20-N-2332-CP
REVIEWED BY: LEO CATAYLO, OSFM
DATE: 4 / /2021

GENERAL SERVICES
Department of General Services
State of California
Real Estate Services Division
Project Management & Development Branch
707 Third Street, Suite 4-105
West Sacramento, California 95605

NICHOLS MELBURG & ROSSETTO ARCHITECTS + ENGINEERS
300 Knollcrest Drive
Redding, CA 96002
(530) 222-3300 (530) 222-3538 FAX
http://www.nmrdesign.com

Copyright © 2021
All ideas, designs, arrangements and plans indicated or represented by this drawing are owned by, and the property of, NICHOLS, MELBURG and ROSSETTO and were created, evolved and developed for use on, and in conjunction with, the specified project. None of such ideas, designs, arrangements or plans shall be used by, or disclosed to any person, firm or corporation for any purpose whatsoever without the written permission of NICHOLS, MELBURG and ROSSETTO.

LICENSE STAMPS

REGISTERED PROFESSIONAL ENGINEER
JORDAN E. HUNTINGTON
No. S4709
STRUCTURAL
STATE OF CALIFORNIA
3/19/2021

STRUCTURAL CONSULTANT
LIONAKIS
1919 Nineteenth Street
Sacramento CA 95811
P 916.558.1900 F 916.558.1919
www.lionakis.com

DRAWING STATUS
CONSTRUCTION DOCUMENTS

ISSUE

No.	Date	Description
1	10/22/2020	INITIAL PLAN REVIEW
2	01/08/2021	AGENCY RESUBMITTAL
3	03/22/2021	AGENCY RESUBMITTAL

If drawing is not 30" x 42" it is a reduced print

PROJECT
RESIDENTIAL CENTER, UKIAH: REPLACEMENT OF EXISTING RESIDENTIAL CENTER
440 EAST HILL ROAD
WILLITS, CALIFORNIA 95490
MENDOCINO COUNTY
CALIFORNIA CONSERVATION CORP

Supervisor	Designed	Drawn
		Author

DSA Application No.
02-118630

SHEET TITLE
DETAILS - WOOD FRAMING

DGS Project Number: 00000000001826
Lionakis Project Number: 018322

Reference North: NORTH
Sheet Scale: 1" = 1'-0"
Sheet Number: S566

ISSUE DATE
July 9, 2021

Plot Date: 3/19/2021 11:24:33 AM
File Name: BIM 360://CCC Willits Residential Center/018322_S-MASTER_R18_CENTRAL.rvt

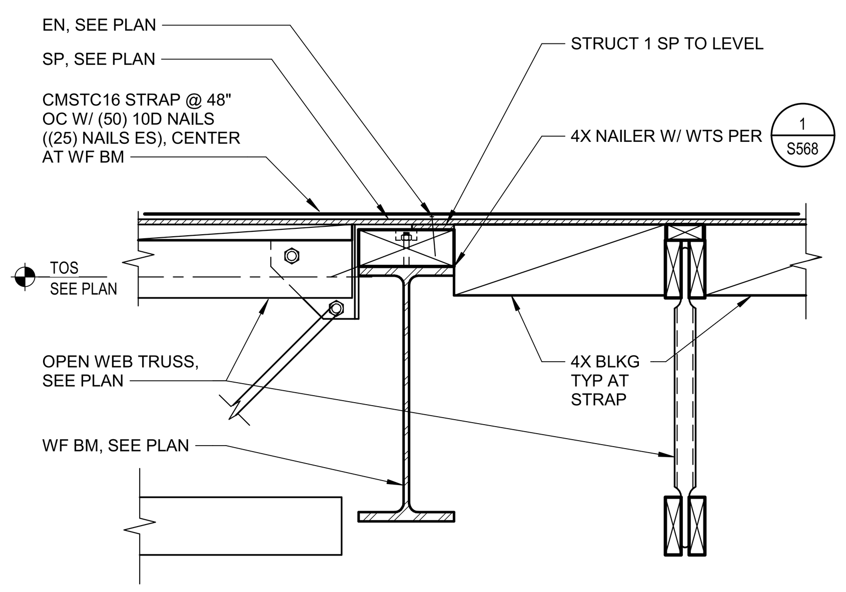

1 DETAIL
1" = 1'-0"
Q1

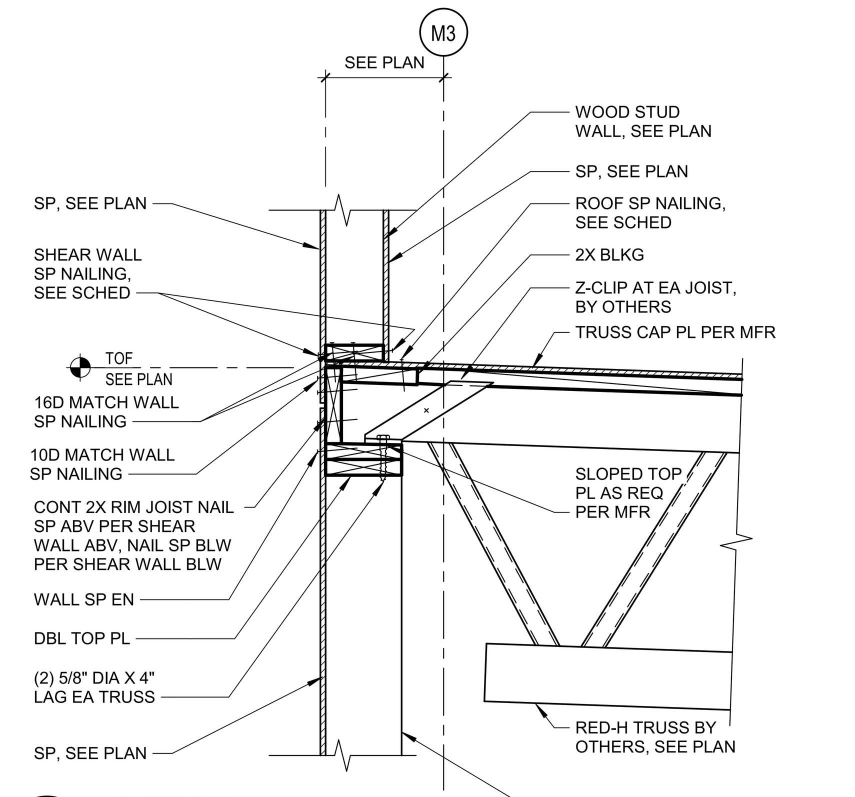

2 DETAIL
1" = 1'-0"
Q1

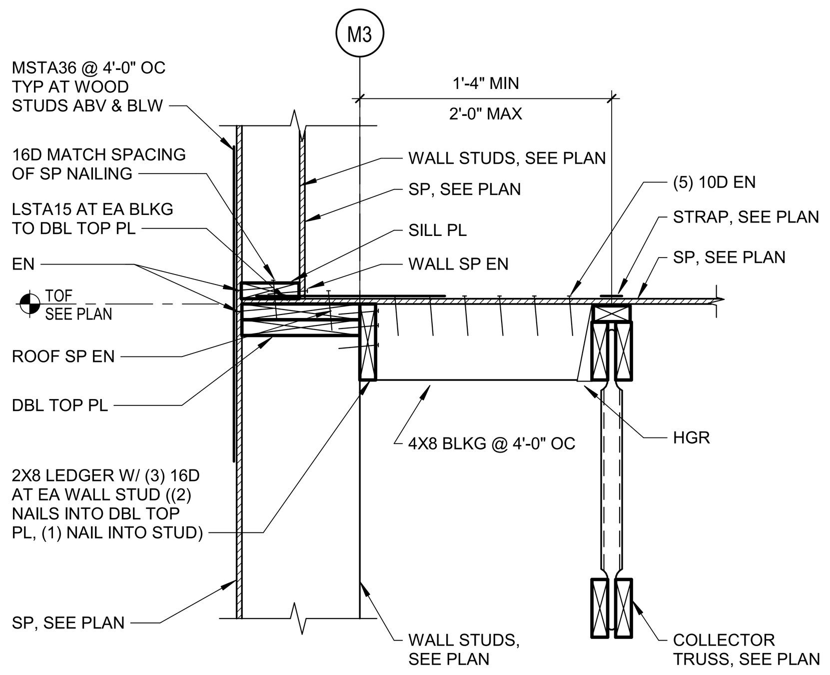

3 DETAIL
1" = 1'-0"
Q1

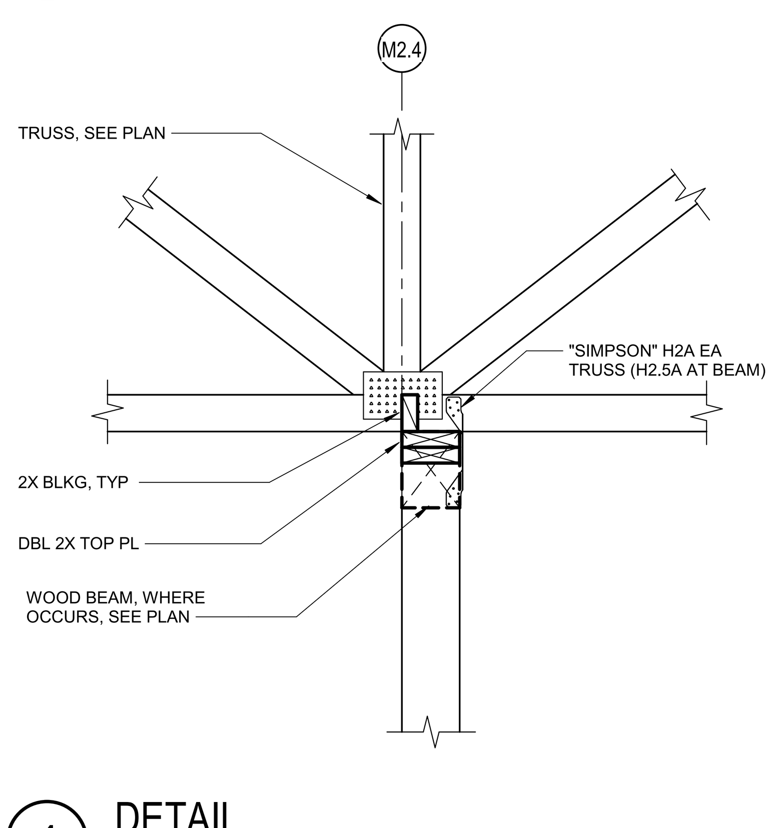

4 DETAIL
1" = 1'-0"
Q1

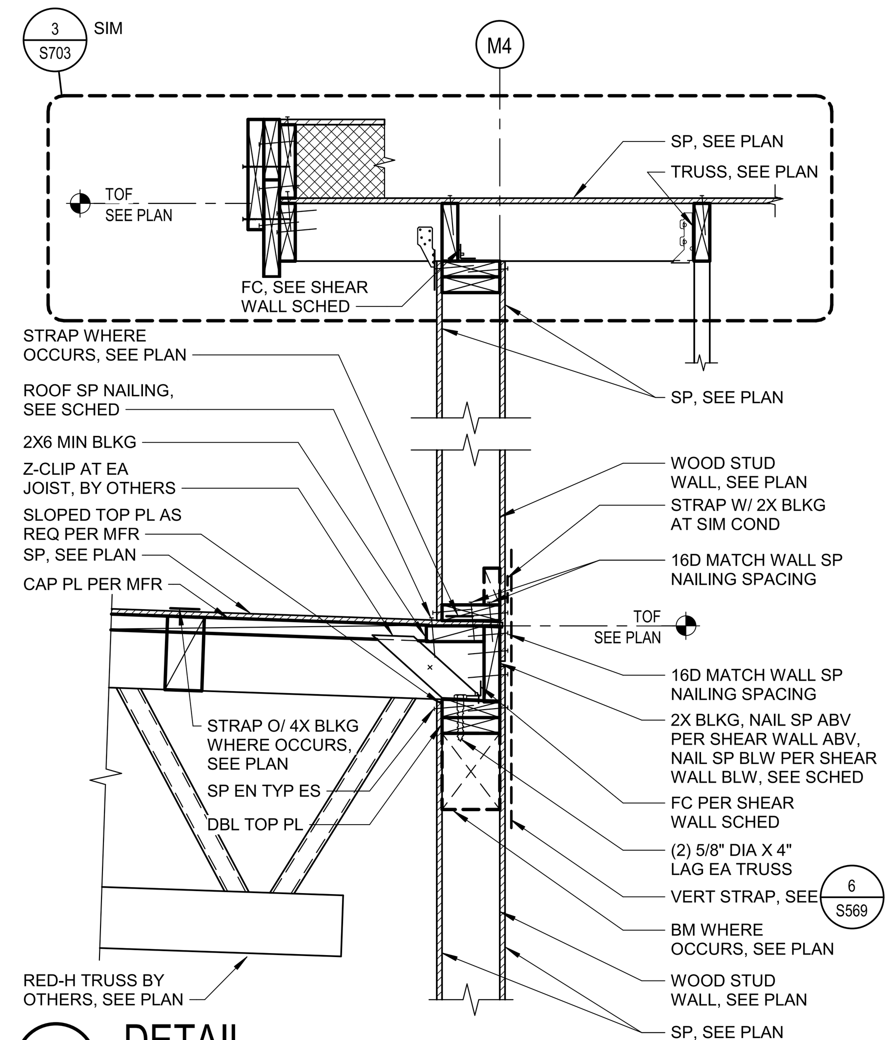

6 DETAIL
1" = 1'-0"
Q1

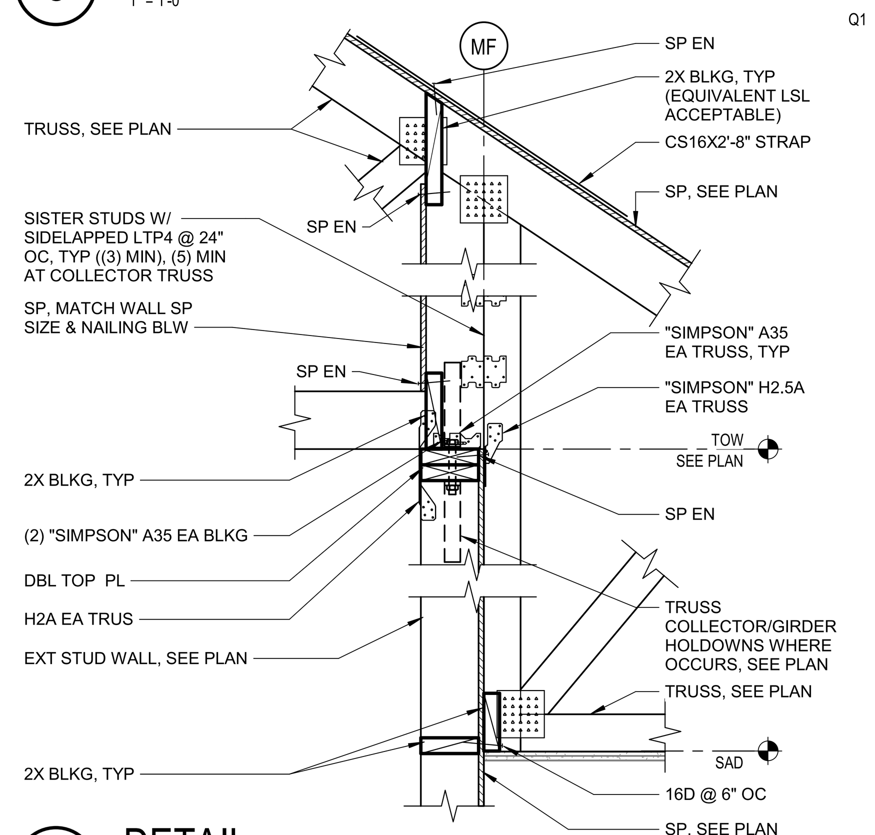

7 DETAIL
1" = 1'-0"
Q1

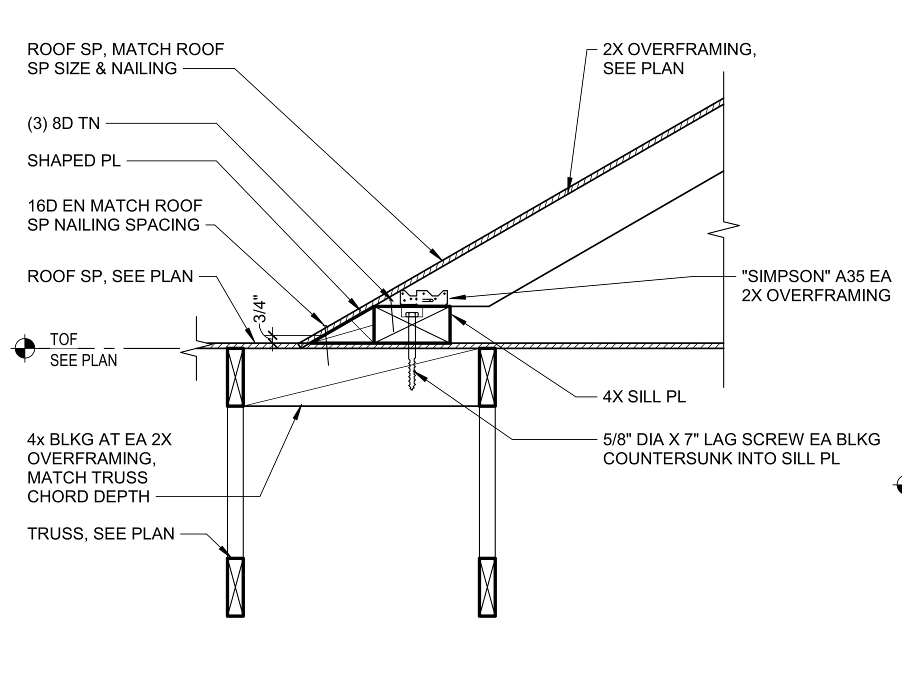

8 DETAIL
1" = 1'-0"
Q1

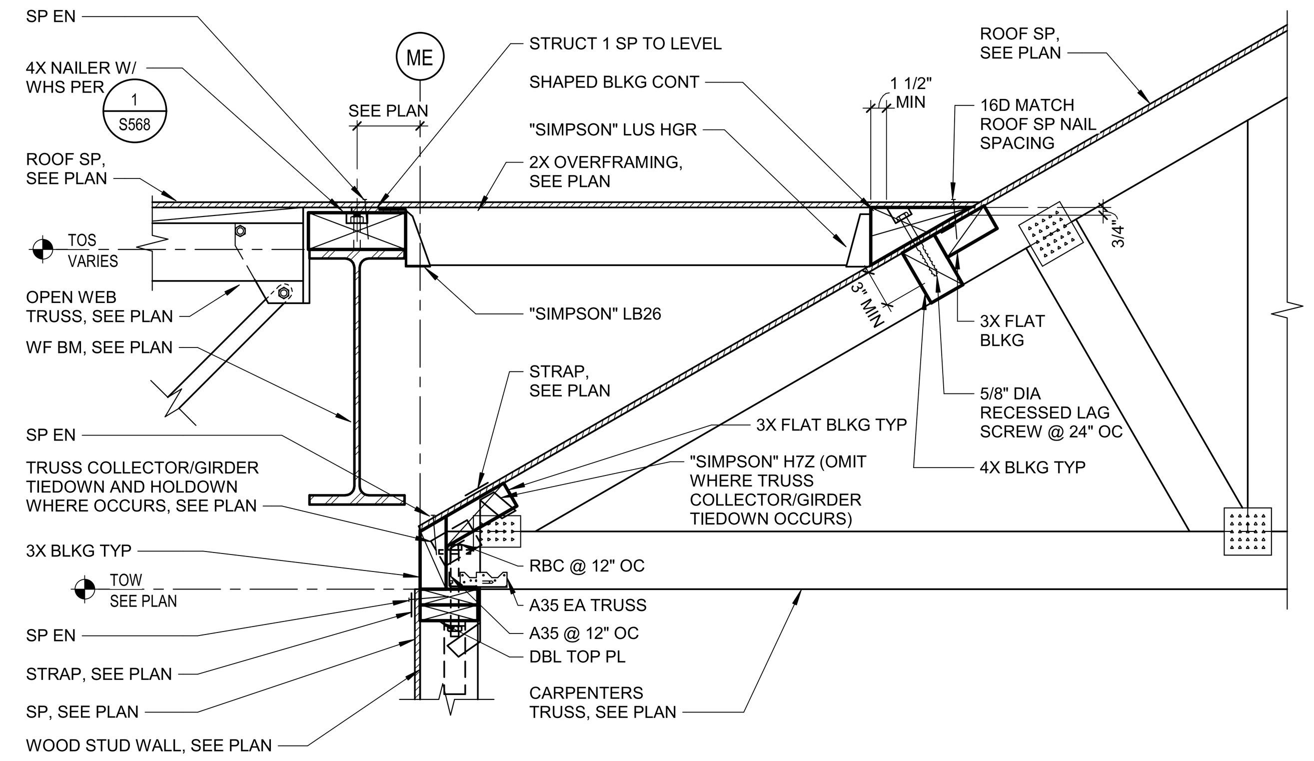

9 DETAIL
1" = 1'-0"
Q1

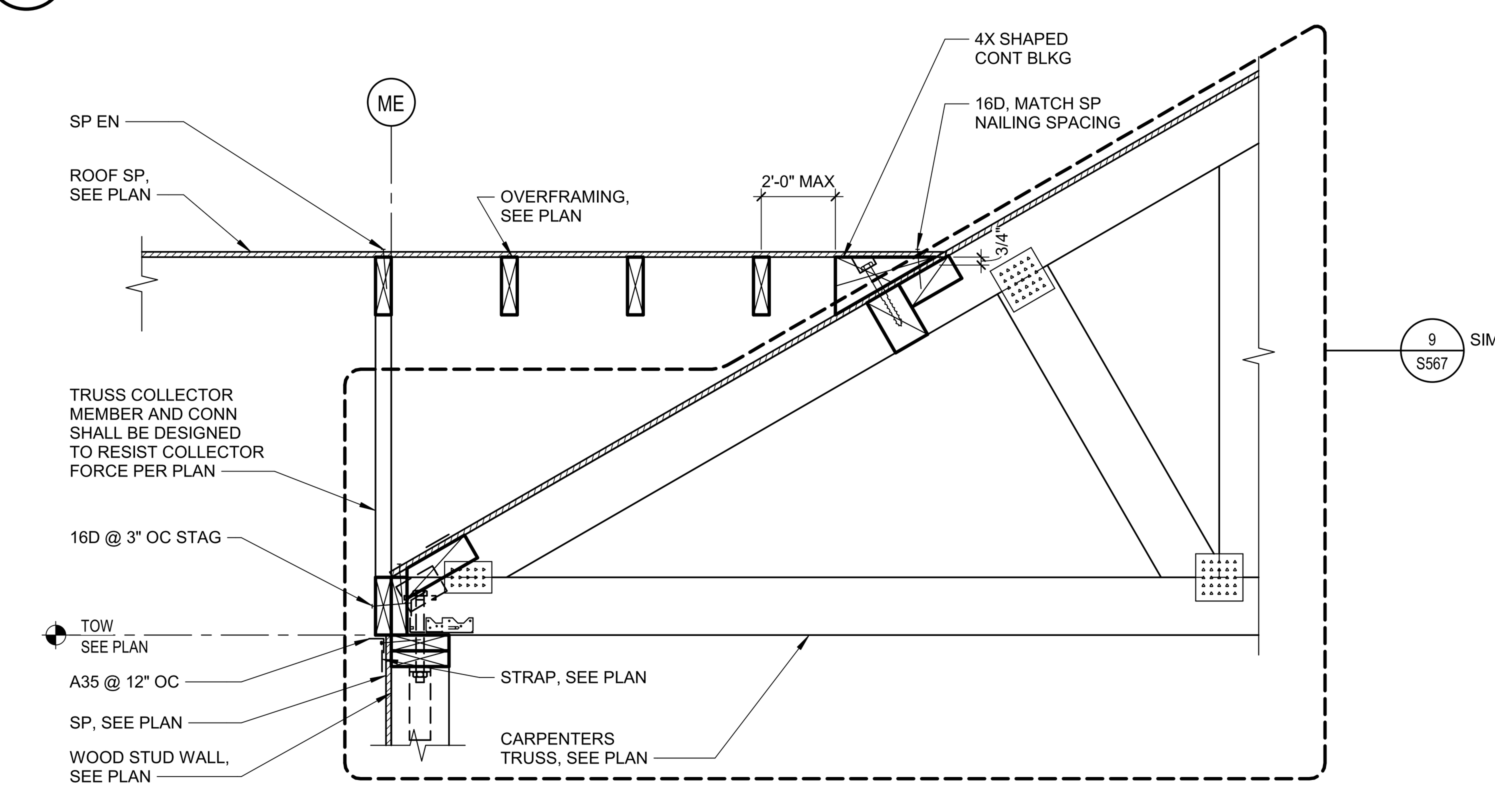

10 DETAIL
1" = 1'-0"
Q1

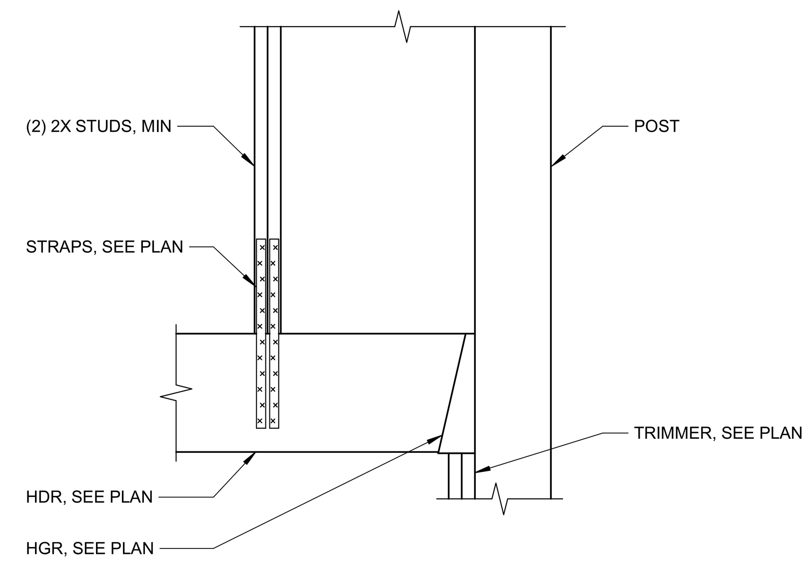

11 DETAIL
1" = 1'-0"
Q1

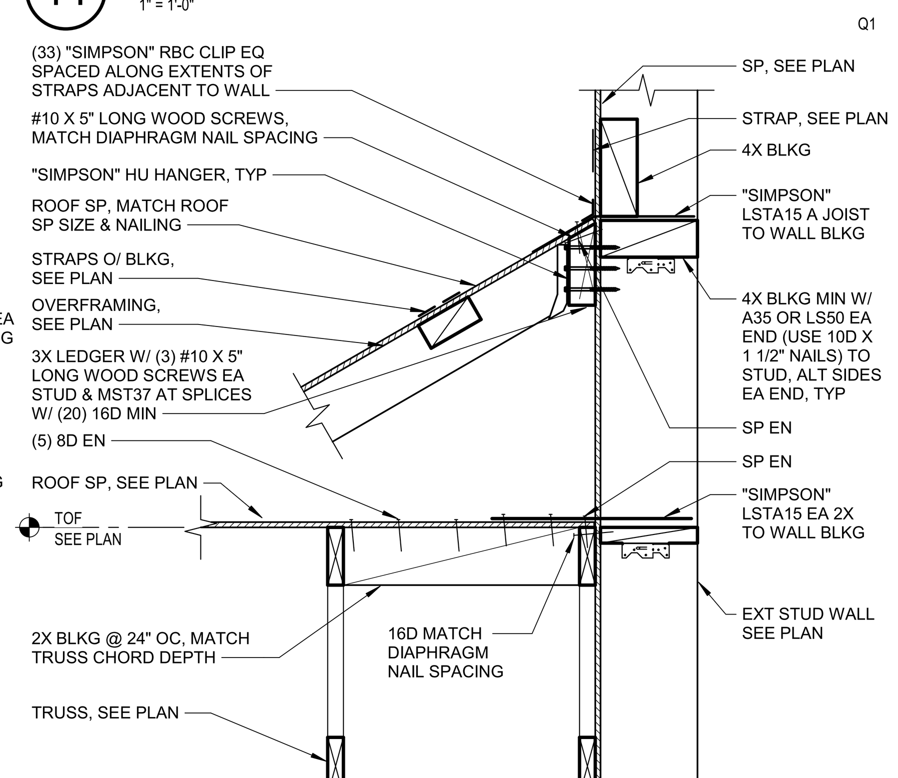

12 DETAIL
1" = 1'-0"
Q1

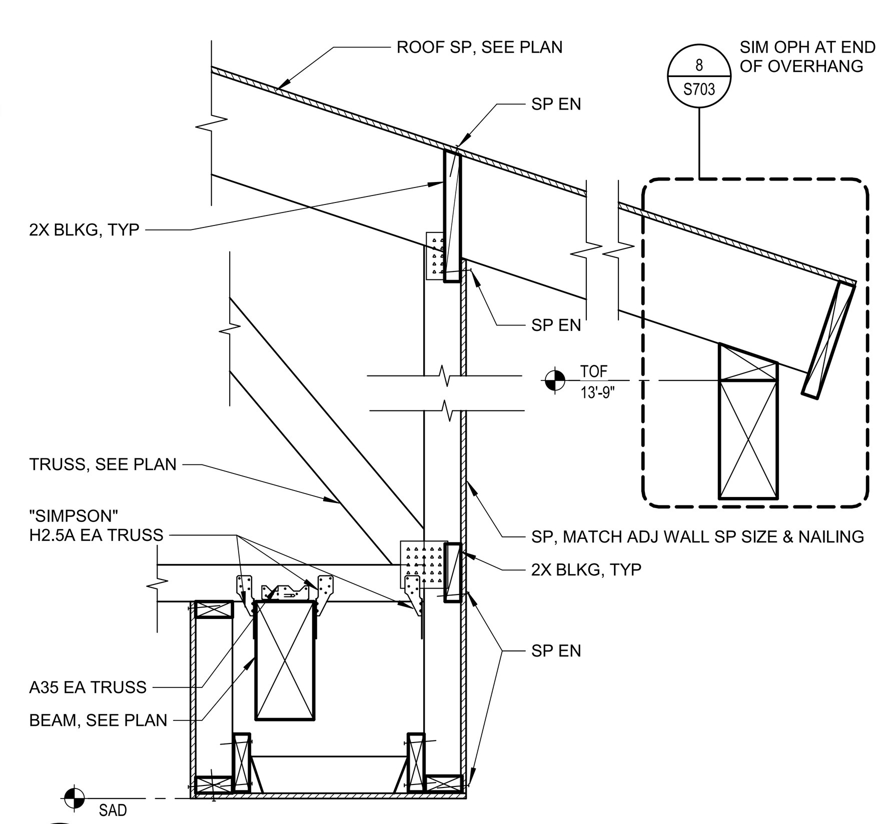

16 DETAIL
1" = 1'-0"
Q1

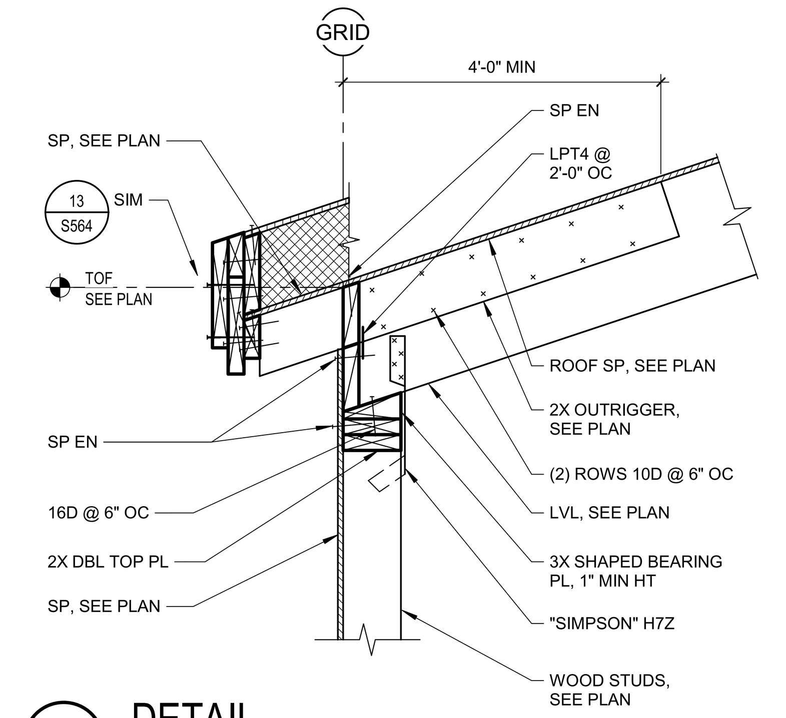

17 DETAIL
1" = 1'-0"
Q1

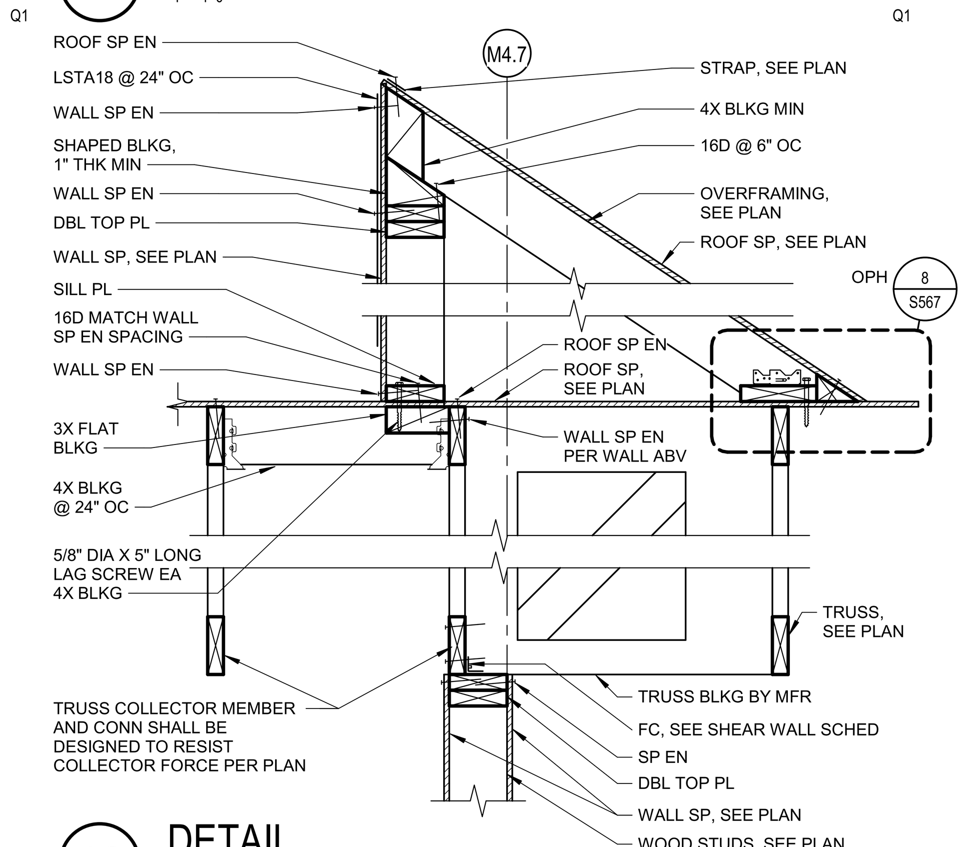

18 DETAIL
1" = 1'-0"
Q1

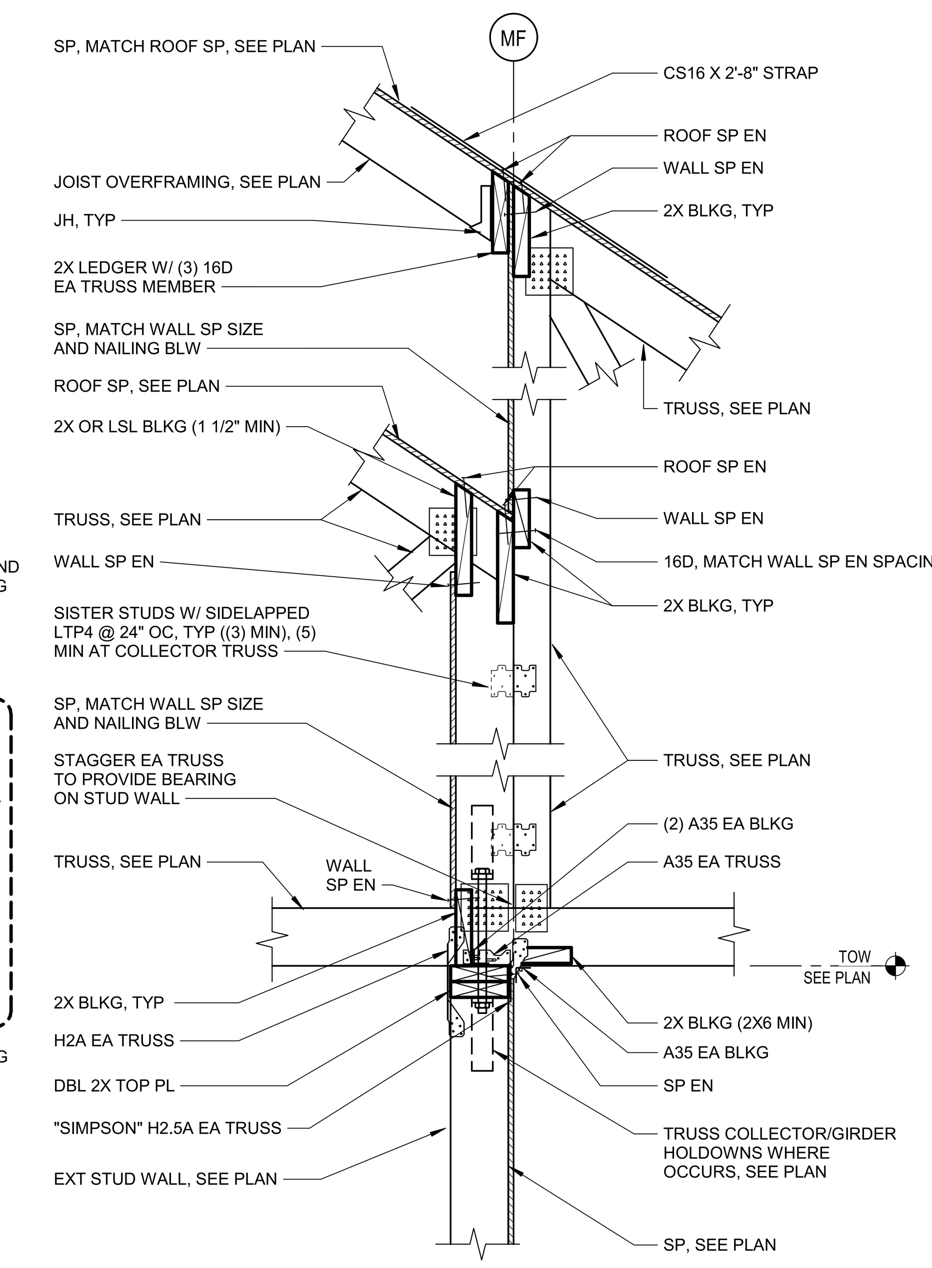

20 DETAIL
1" = 1'-0"
Q1

IDENTIFICATION STAMP
DIV. OF THE STATE ARCHITECT
APP: 02-118630 INC:
REVIEWED FOR
SS ☐ FLS ☐ ACS ☑
DATE: 04/13/2021

OFFICE OF THE STATE FIRE MARSHAL
APPROVED FIRE AND PANIC ONLY
Approval of this plan does not authorize or approve any omission or deviation from applicable regulations. Final approval is subject to field inspection. One set of approved plans shall be available on the project site at all times.
PERMIT NO.: 20-N-2332-CP
REVIEWED BY: LITO CATAYLO, OSFM
DATE: 4/1/2021

GENERAL SERVICES
Department of General Services
State of California
Real Estate Services Division
Project Management & Development Branch
707 Third Street, Suite 4-105
West Sacramento, California 95605

NICHOLS MELBURG & ROSSETTO
ARCHITECTS + ENGINEERS
300 Knollcrest Drive
Redding, CA. 96002
(530) 222-3300 (530) 222-3538 FAX
http://www.nmrdesign.com

Copyright © 2021
All ideas, designs, arrangements and plans indicated or represented by this drawing are owned by, and the property of, NICHOLS, MELBURG and ROSSETTO and were created, evolved and developed for use on, and in conjunction with, the specified project. None of such ideas, designs, arrangements or plans shall be used by, or disclosed to any person, firm or corporation for any purpose whatsoever without the written permission of NICHOLS, MELBURG and ROSSETTO.

LICENSE STAMPS
REGISTERED PROFESSIONAL ENGINEER
DARRON E. HUNTINGDALE
No. S4788
STRUCTURAL
STATE OF CALIFORNIA
3/19/2021

STRUCTURAL CONSULTANT
LIONAKIS
1919 Nineteenth Street
Sacramento CA 95811
P 916.558.1900 F 916.558.1919
www.lionakis.com

DRAWING STATUS
CONSTRUCTION DOCUMENTS

ISSUE

No.	Date	Description
1	10/22/2020	INITIAL PLAN REVIEW
2	01/08/2021	AGENCY RESUBMITTAL
3	03/22/2021	AGENCY RESUBMITTAL

If drawing is not 30" x 42" it is a reduced print

PROJECT
RESIDENTIAL CENTER, UKIAH: REPLACEMENT OF EXISTING RESIDENTIAL CENTER
440 EAST HILL ROAD
WILLITS, CALIFORNIA 95490
MENDOCINO COUNTY
CALIFORNIA CONSERVATION CORP

Supervisor	Designed	Drawn
		Author

DSA Application No.
02-118630

SHEET TITLE
DETAILS - WOOD FRAMING

DGS Project Number 000000000001826
Lionakis Project Number 018322

Reference North
NORTH

Sheet Scale 1" = 1'-0"

Sheet Number S567

ISSUE DATE
July 9, 2021

Plot Date: 3/19/2021 11:24:34 AM
File Name: BIM 360://CCC Willits Residential Center/018322_S-MASTER_R18_CENTRAL.rvt

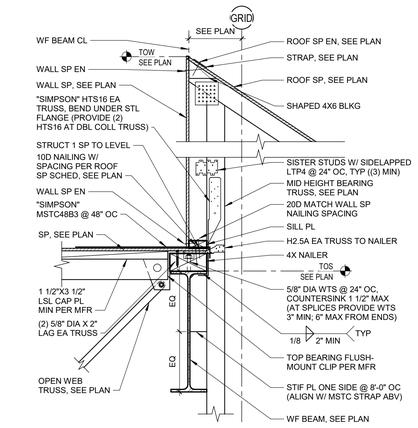

1 DETAIL
1" = 1'-0"
Q1

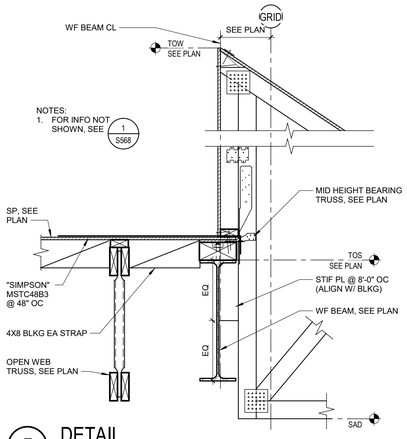

5 DETAIL
1" = 1'-0"
Q1

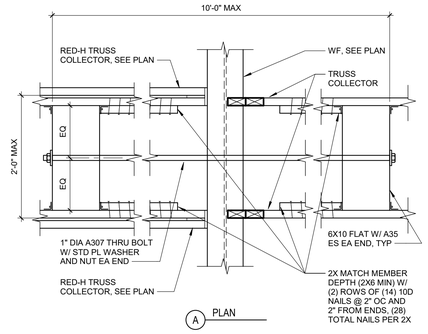

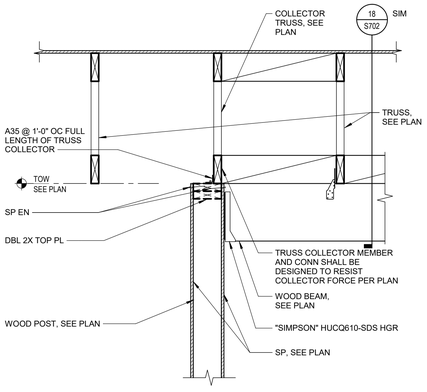

13 DETAIL
1" = 1'-0"
Q1

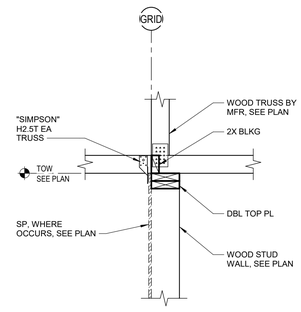

17 DETAIL
1" = 1'-0"
Q1

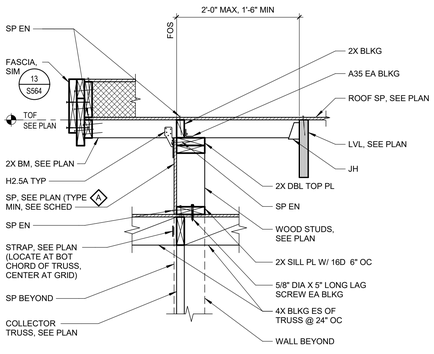

2 DETAIL
1" = 1'-0"
Q1

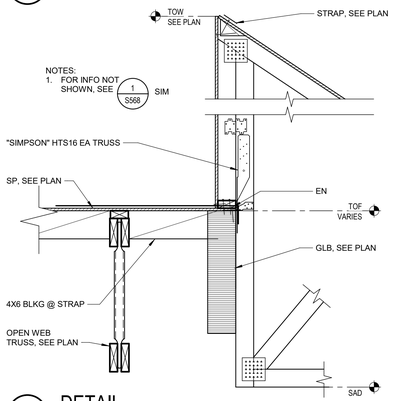

6 DETAIL
1" = 1'-0"
Q1

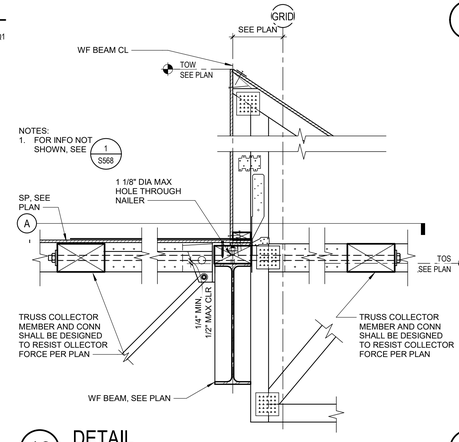

10 DETAIL
1" = 1'-0"
Q1

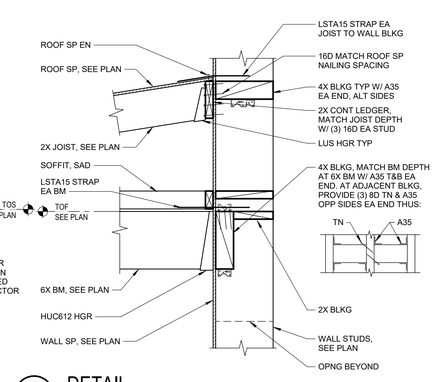

14 DETAIL
1" = 1'-0"
Q1

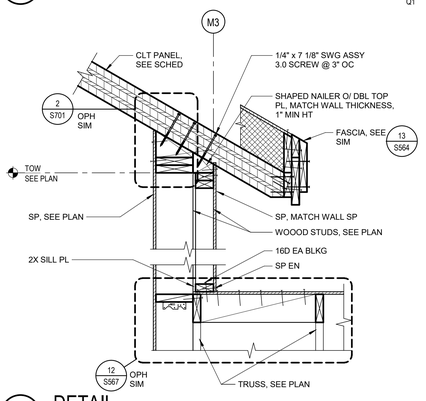

18 DETAIL
1" = 1'-0"
Q1

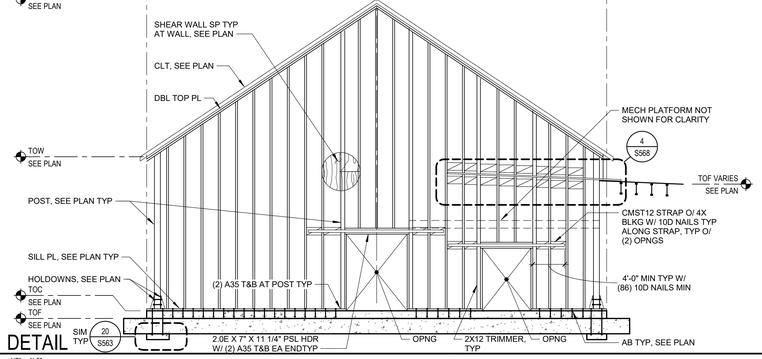

3 DETAIL
1/8" = 1'-0"
Q1

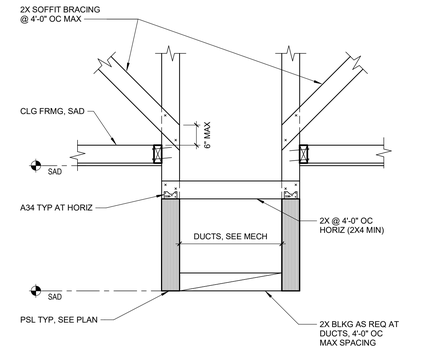

11 DETAIL
1" = 1'-0"
Q1

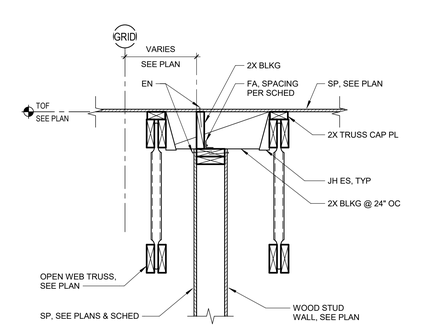

15 DETAIL
1" = 1'-0"
Q1

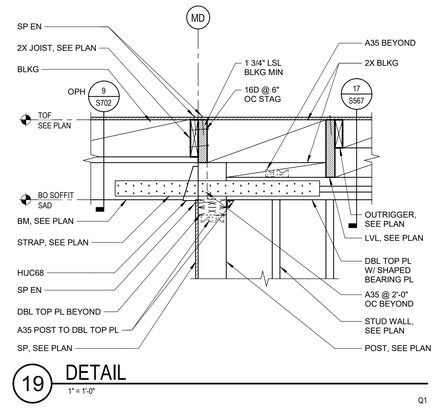

19 DETAIL
1" = 1'-0"
Q1

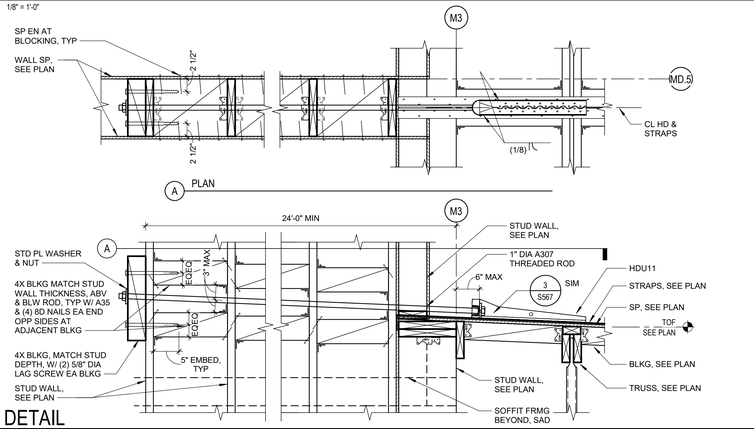

4 DETAIL
1" = 1'-0"
Q1

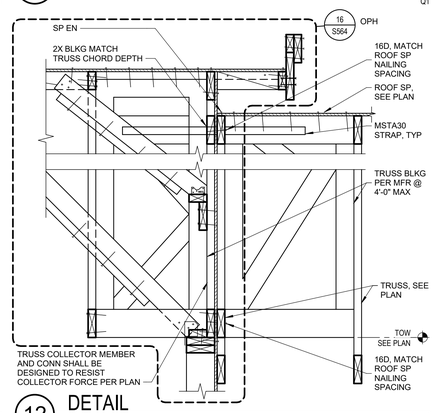

12 DETAIL
1" = 1'-0"
Q1

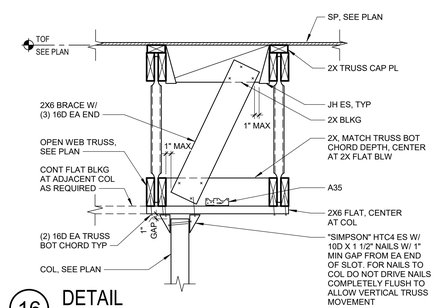

16 DETAIL
1" = 1'-0"
Q1

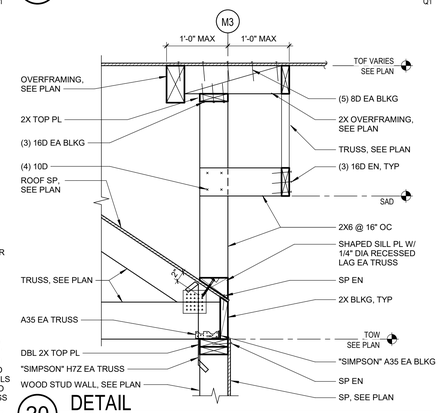

20 DETAIL
1" = 1'-0"
Q1

IDENTIFICATION STAMP
DIV. OF THE STATE ARCHITECT
APP: 02-118630 INC:
REVIEWED FOR
SS ☐ FLS ☐ ACS ☑
DATE: 04/13/2021

OFFICE OF THE STATE FIRE MARSHAL
APPROVED FIRE AND PANIC ONLY
Approval of this plan does not authorize or approve any omission or deviation from applicable regulations. Final approval is subject to field inspection. One set of approved plans shall be available on the project site at all times.
PERMIT NO. 20-N-2332-CP
REVIEWED BY: LEO CATAYLO, OSFM
DATE: 4 / /2021

GENERAL SERVICES
Department of General Services
State of California
Real Estate Services Division
Project Management & Development Branch
707 Third Street, Suite 4-105
West Sacramento, California 95605

NICHOLS MELBURG & ROSSETTO ARCHITECTS + ENGINEERS
300 Knollcrest Drive
Redding, CA 96002
(530) 222-3300 (530) 222-3538 FAX
http://www.nmrdesign.com

Copyright © 2021
All ideas, designs, arrangements and plans indicated or represented by this drawing are owned by, and the property of, NICHOLS, MELBURG and ROSSETTO and were created, evolved and developed for use on, and in conjunction with, the specified project. None of such ideas, designs, arrangements or plans shall be used by, or disclosed to any person, firm or corporation for any purpose whatsoever without the written permission of NICHOLS, MELBURG and ROSSETTO.

LICENSE STAMPS
REGISTERED PROFESSIONAL ENGINEER
JARROD E. HUNTINGTON
No. S4709
STRUCTURAL
STATE OF CALIFORNIA
3/19/2021

STRUCTURAL CONSULTANT
LIONAKIS
1919 Nineteenth Street
Sacramento CA 95811
P 916.558.1900 F 916.558.1919
www.lionakis.com

DRAWING STATUS
CONSTRUCTION DOCUMENTS

ISSUE

No.	Date	Description
1	10/22/2020	INITIAL PLAN REVIEW
2	01/08/2021	AGENCY RESUBMITTAL
3	03/22/2021	AGENCY RESUBMITTAL

If drawing is not 30" x 42" it is a reduced print

PROJECT
RESIDENTIAL CENTER, UKIAH: REPLACEMENT OF EXISTING RESIDENTIAL CENTER
440 EAST HILL ROAD
WILLITS, CALIFORNIA 95490
MENDOCINO COUNTY
CALIFORNIA CONSERVATION CORP

Supervisor	Designed	Drawn
		Author

DSA Application No.
02-118630

SHEET TITLE
DETAILS - WOOD FRAMING

DGS Project Number: 00000000001826
Lionakis Project Number: 018322

Reference North
Sheet Scale: As indicated
Sheet Number: S568

ISSUE DATE
July 9, 2021

Plot Date: 3/19/2021 11:24:37 AM
File Name: BIM 360://CCC Willits Residential Center/018322_S-MASTER_R18_CENTRAL.rvt

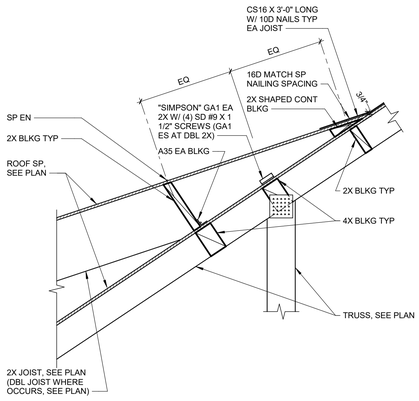

1 DETAIL
1" = 1'-0"
Q1

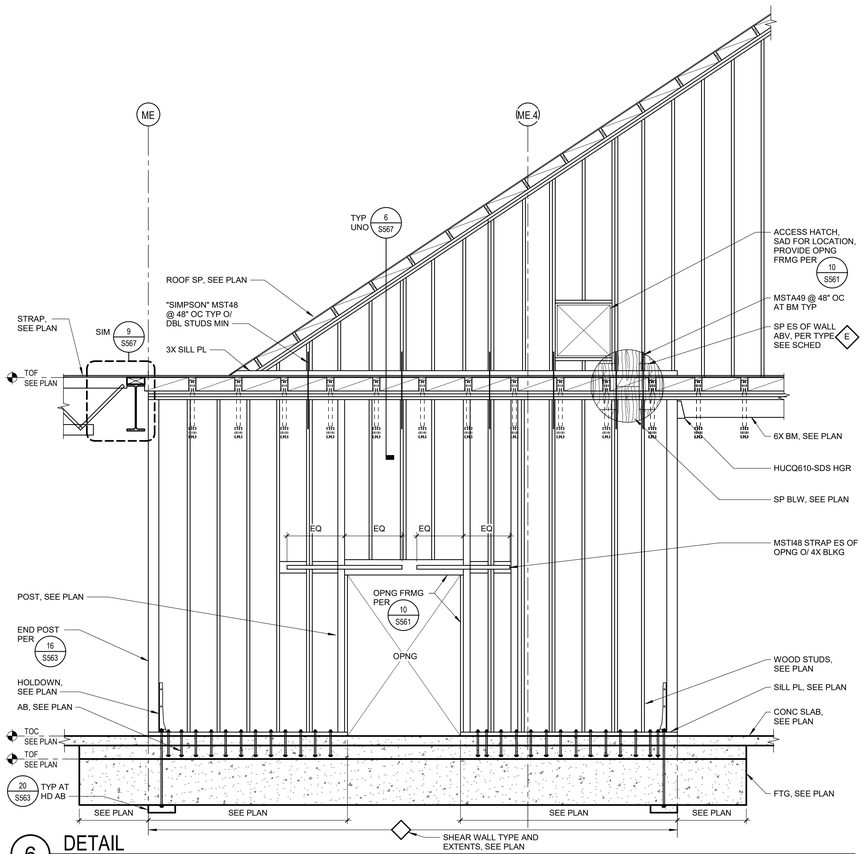

6 DETAIL
3/8" = 1'-0"
Q1

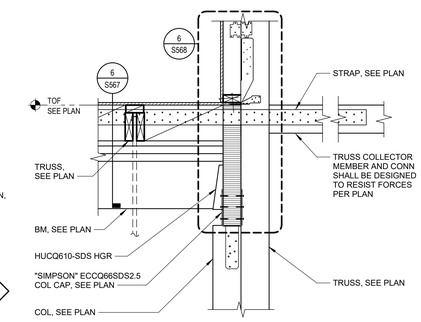

13 DETAIL
1" = 1'-0"
Q1

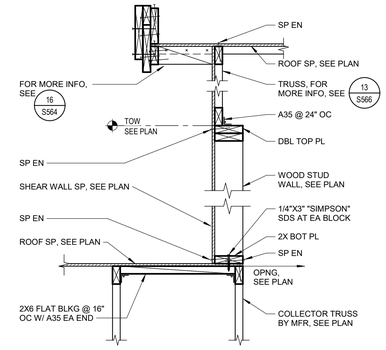

17 DETAIL
1" = 1'-0"
Q1

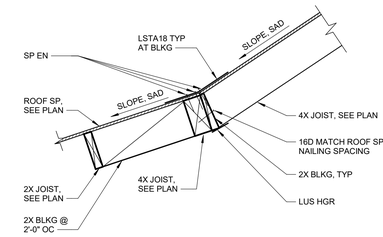

2 DETAIL
1" = 1'-0"
Q1

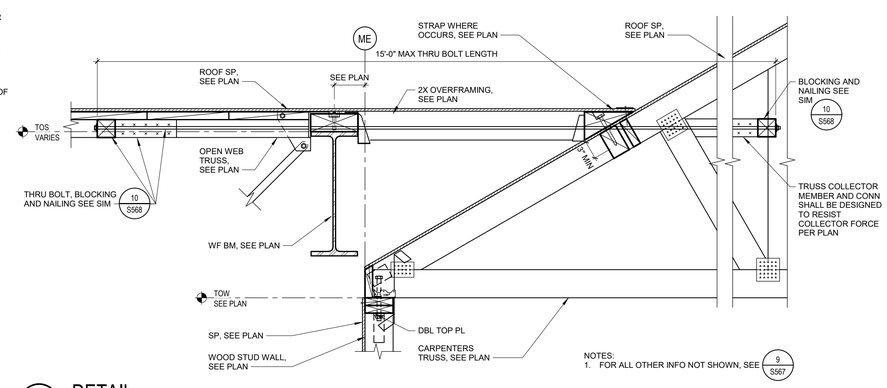

14 DETAIL
1" = 1'-0"
Q1

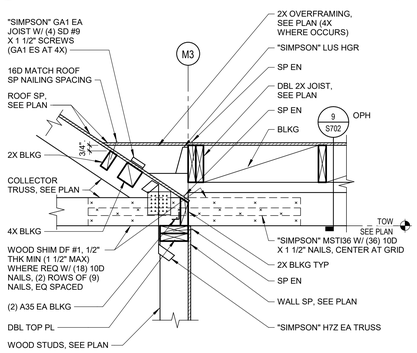

3 DETAIL
1" = 1'-0"
Q1

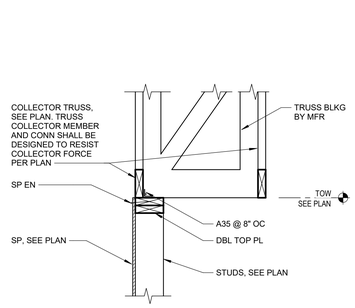

7 DETAIL
1" = 1'-0"
Q1

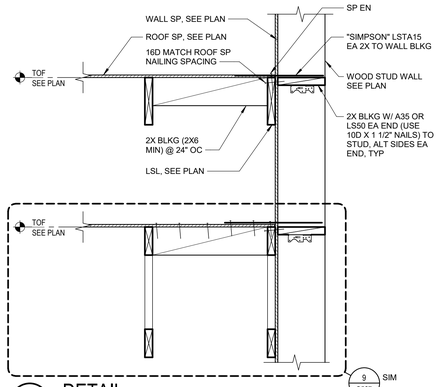

11 DETAIL
1" = 1'-0"
Q1

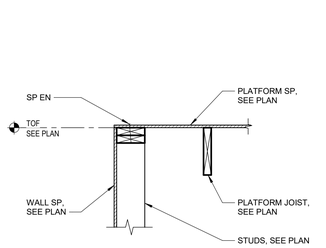

15 DETAIL
1" = 1'-0"
Q1

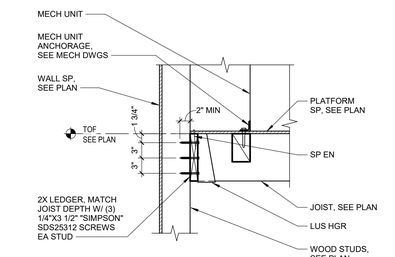

19 DETAIL
1" = 1'-0"
Q1

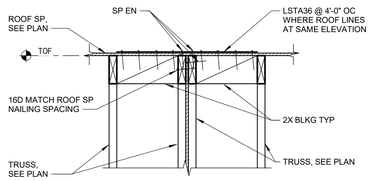

4 DETAIL
1" = 1'-0"
Q1

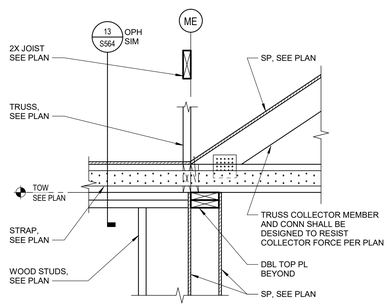

8 DETAIL
1" = 1'-0"
Q1

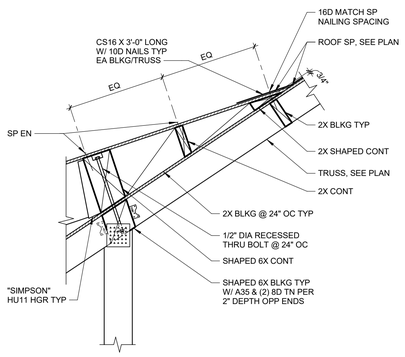

12 DETAIL
1" = 1'-0"
Q1

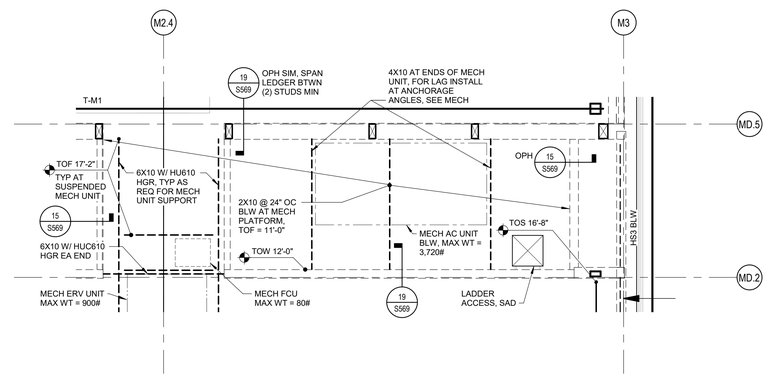

16 1/4" = 1'-0"

IDENTIFICATION STAMP
DIV. OF THE STATE ARCHITECT
APP: 02-118630 INC:
REVIEWED FOR
SS ☐ FLS ☐ ACS ☑
DATE: 04/13/2021

OFFICE OF THE STATE FIRE MARSHAL
APPROVED FIRE AND PANIC ONLY
Approval of this plan does not authorize or approve any omission or deviation from applicable regulations. Final approval is subject to field inspection. One set of approved plans shall be available on the project site at all times.
PERMIT NO. 20-N-2332-CP
REVIEWED BY: LEO CATAYLO, OSFM
DATE: 4 / /2021

DGS
GENERAL SERVICES
Department of General Services
State of California
Real Estate Services Division
Project Management & Development Branch
707 Third Street, Suite 4-105
West Sacramento, California 95605

NICHOLS MELBURG & ROSSETTO
ARCHITECTS + ENGINEERS
300 Knollcrest Drive
Redding, CA 96002
(530) 222-3300 (530) 222-3538 FAX
http://www.nmrdesign.com

Copyright © 2021
All ideas, designs, arrangements and plans indicated or represented by this drawing are owned by, and the property of, NICHOLS, MELBURG and ROSSETTO and were created, evolved and developed for use on, and in conjunction with, the specified project. None of such ideas, designs, arrangements or plans shall be used by, or disclosed to any person, firm or corporation for any purpose whatsoever without the written permission of NICHOLS, MELBURG and ROSSETTO.

LICENSE STAMPS

STRUCTURAL CONSULTANT
LIONAKIS
1919 Nineteenth Street
Sacramento CA 95811
P 916.558.1900 F 916.558.1919
www.lionakis.com

DRAWING STATUS
CONSTRUCTION DOCUMENTS

ISSUE

No.	Date	Description
1	10/22/2020	INITIAL PLAN REVIEW
2	01/08/2021	AGENCY RESUBMITTAL
3	03/22/2021	AGENCY RESUBMITTAL

If drawing is not 30" x 42" it is a reduced print

PROJECT
RESIDENTIAL CENTER, UKIAH: REPLACEMENT OF EXISTING RESIDENTIAL CENTER
440 EAST HILL ROAD
WILLITS, CALIFORNIA 95490
MENDOCINO COUNTY
CALIFORNIA CONSERVATION CORP

Supervisor	Designed	Drawn
		Author

DSA Application No.
02-118630

SHEET TITLE
DETAILS - WOOD FRAMING

DGS Project Number	Lionakis Project Number
00000000001826	018322

Reference North
Sheet Scale
As indicated
Sheet Number
S569

ISSUE DATE
July 9, 2021

Plot Date: 3/19/2021 11:24:39 AM
File Name: BIM 360://CCC Willits Residential Center/018322_S-MASTER_R18_CENTRAL.rvt

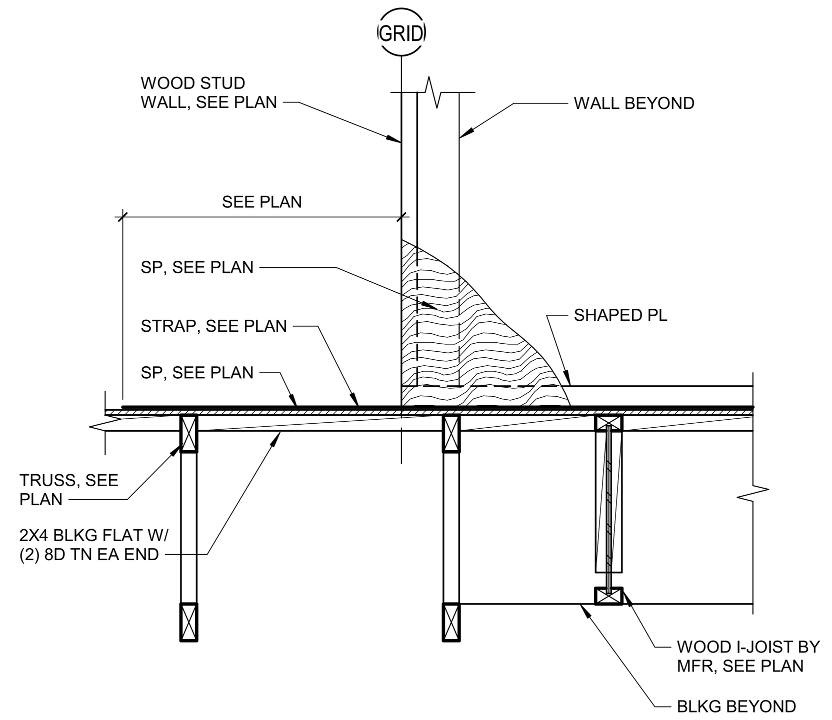

1 DETAIL
1" = 1'-0"
Q1

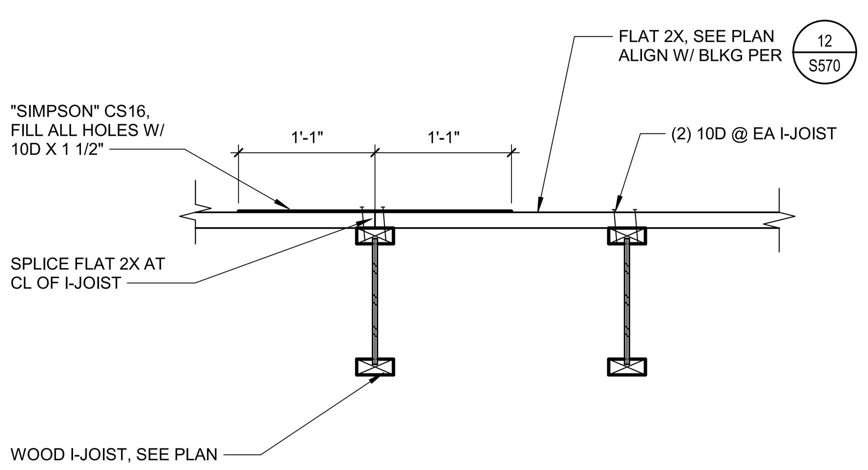

3 DETAIL
1" = 1'-0"
Q1

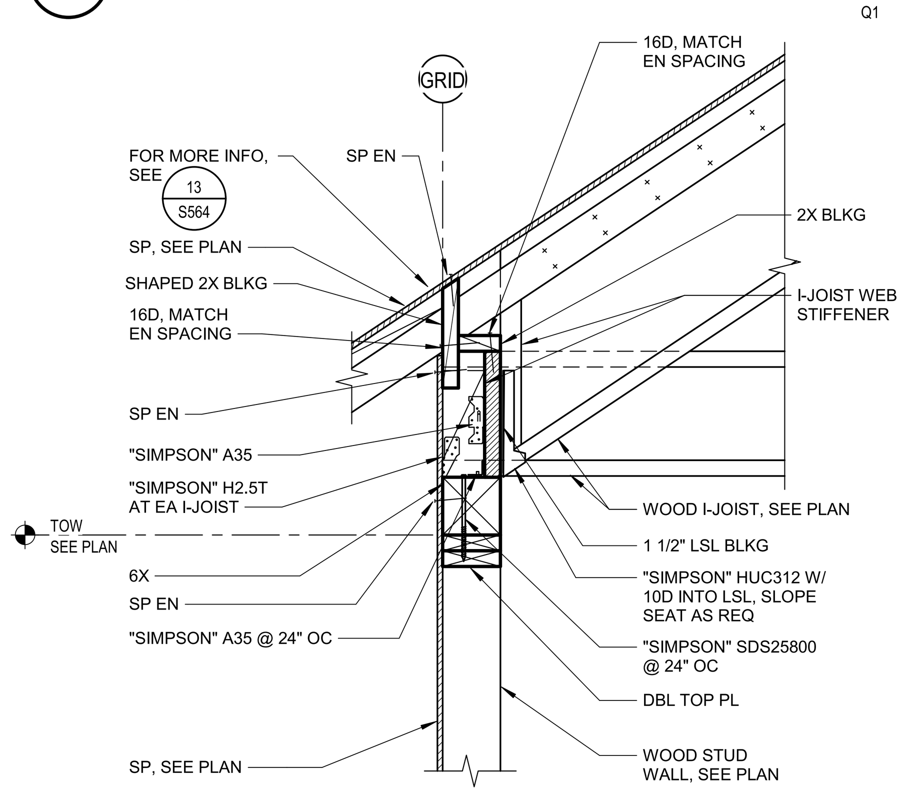

4 DETAIL
1" = 1'-0"
Q1

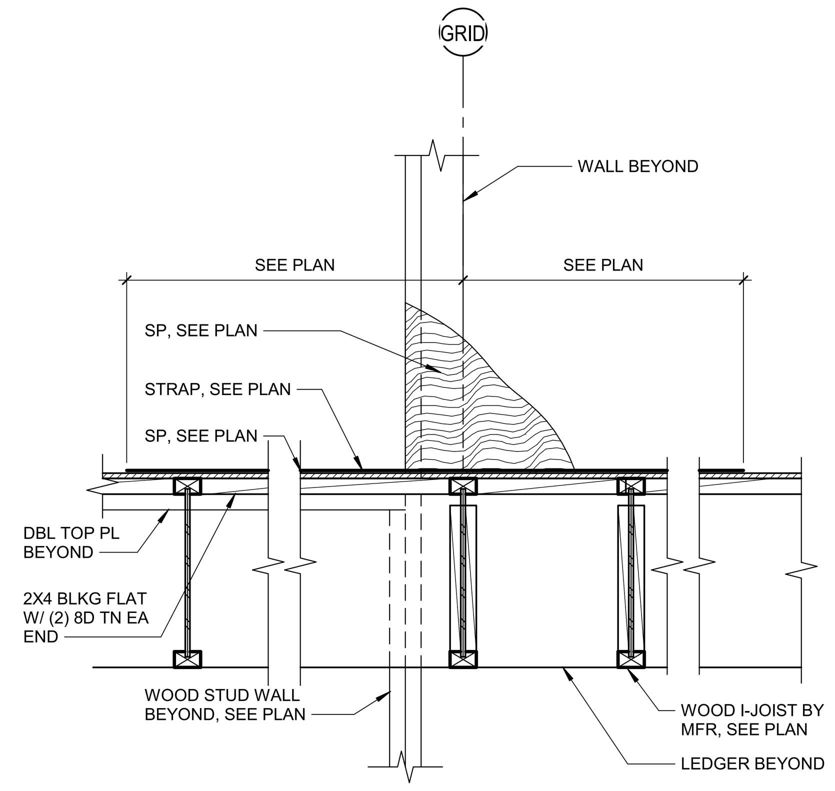

5 DETAIL
1" = 1'-0"
Q1

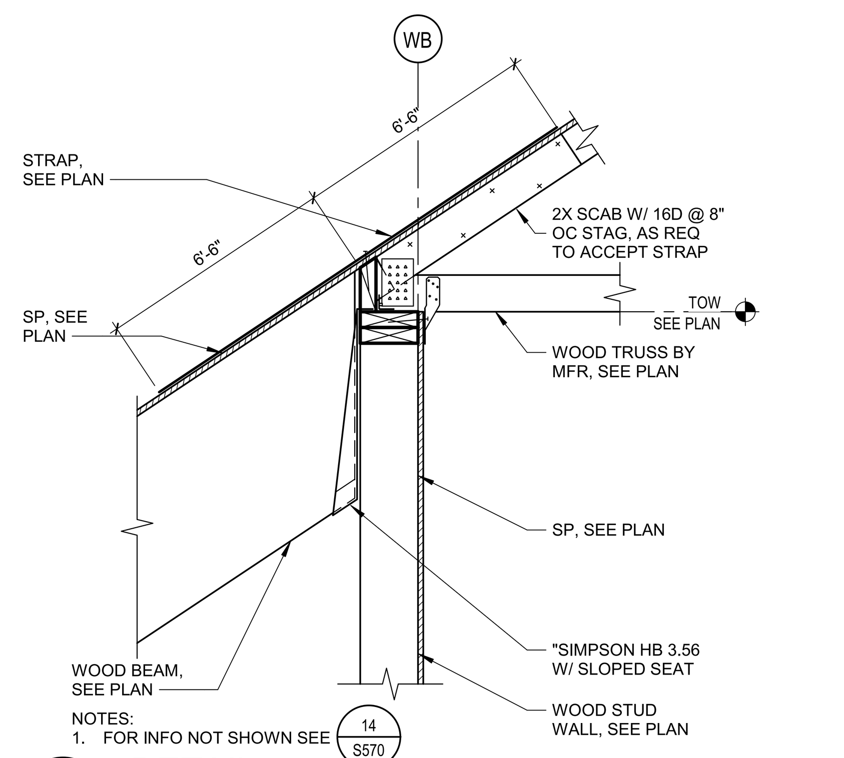

6 DETAIL
1" = 1'-0"
Q1

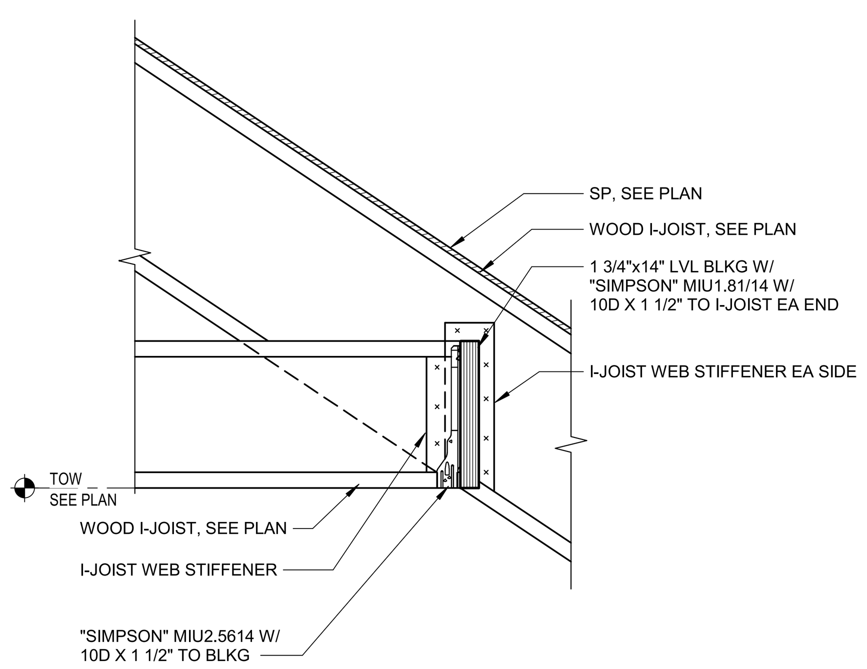

7 DETAIL
1" = 1'-0"
Q1

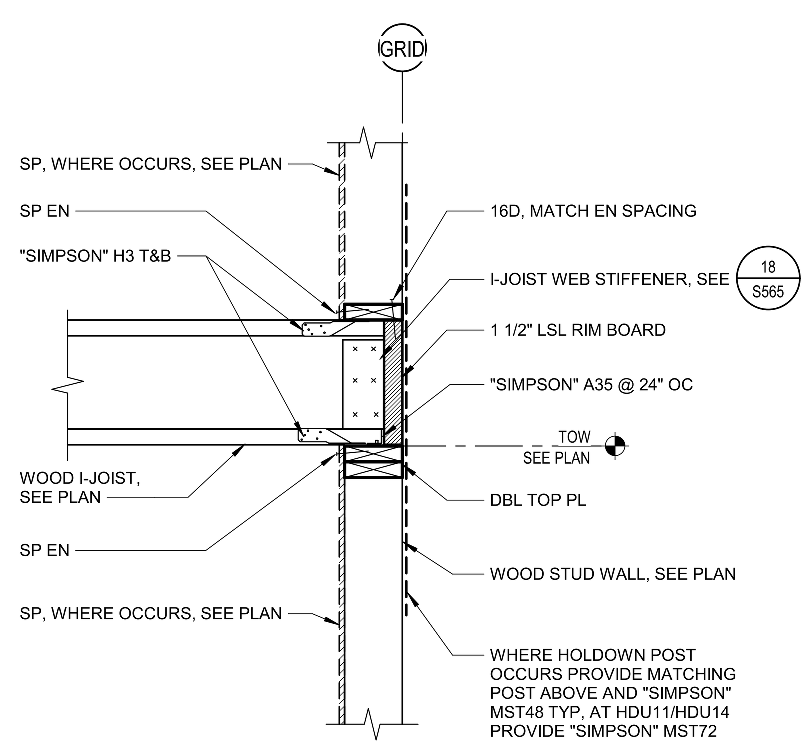

8 DETAIL
1" = 1'-0"
Q1

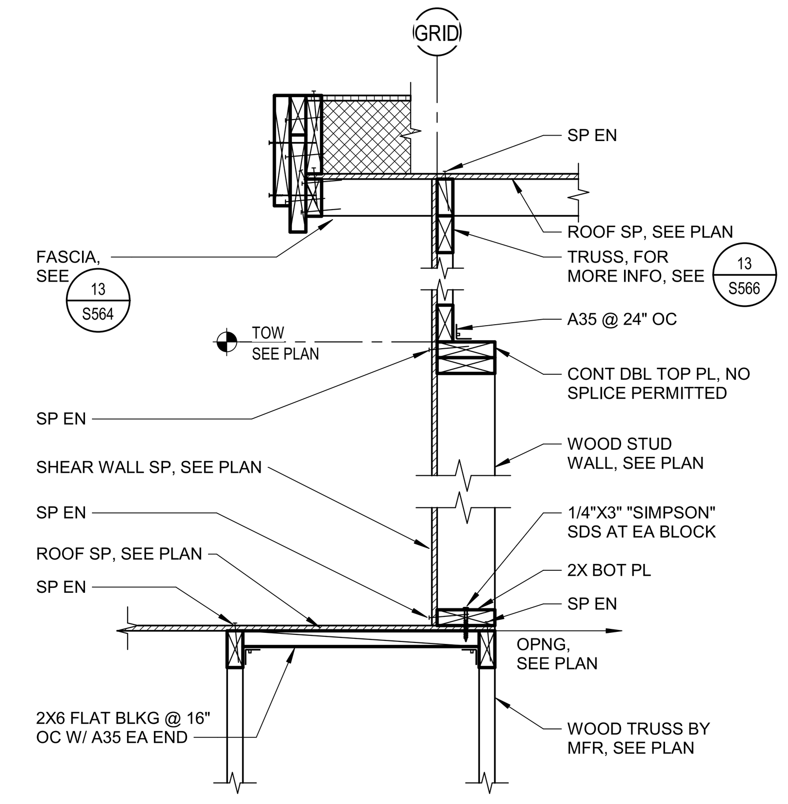

9 DETAIL
1" = 1'-0"
Q1

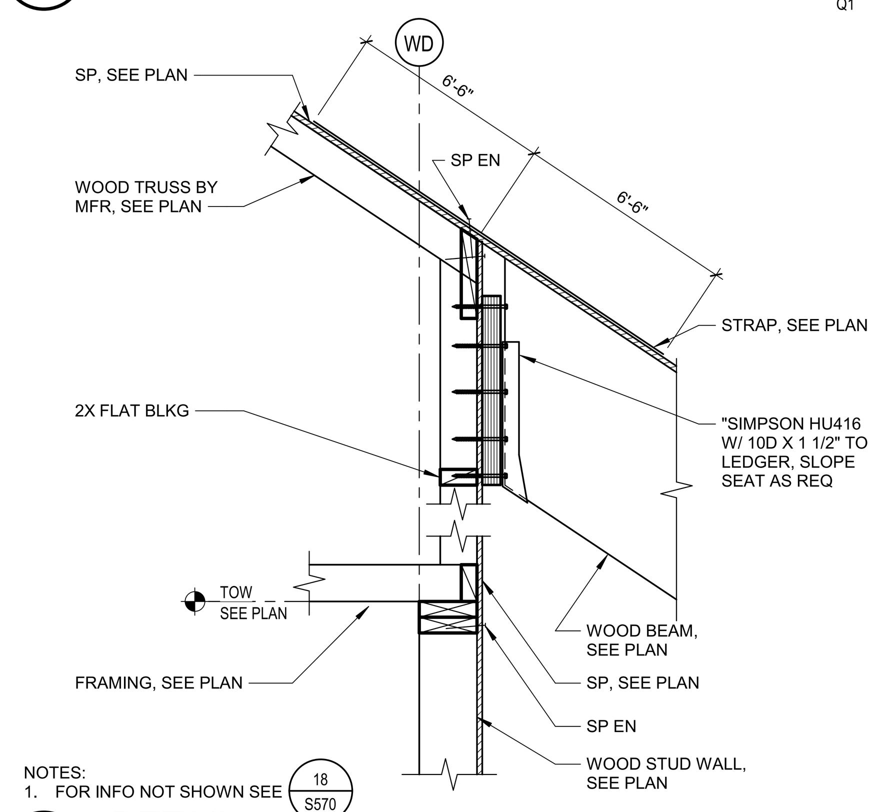

10 DETAIL
1" = 1'-0"
Q1

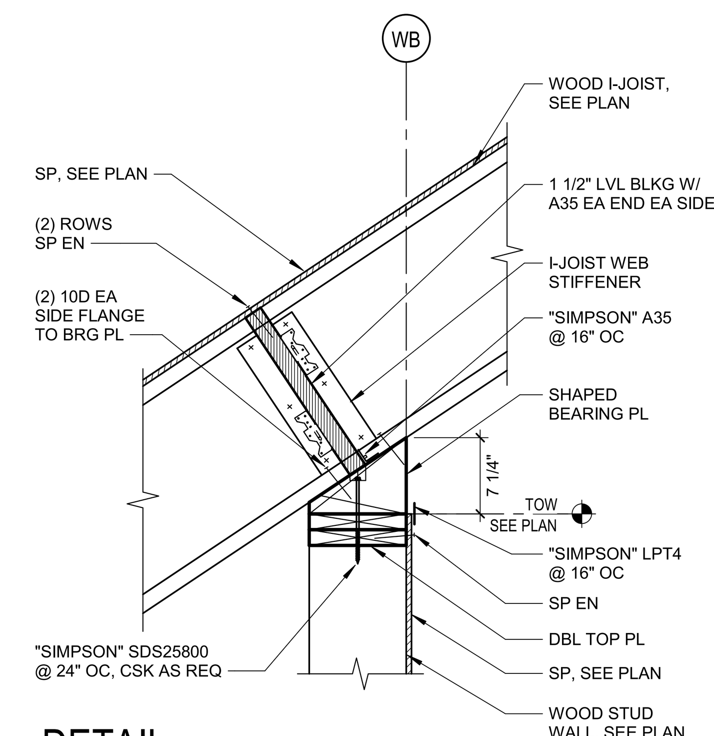

11 DETAIL
1" = 1'-0"
Q1

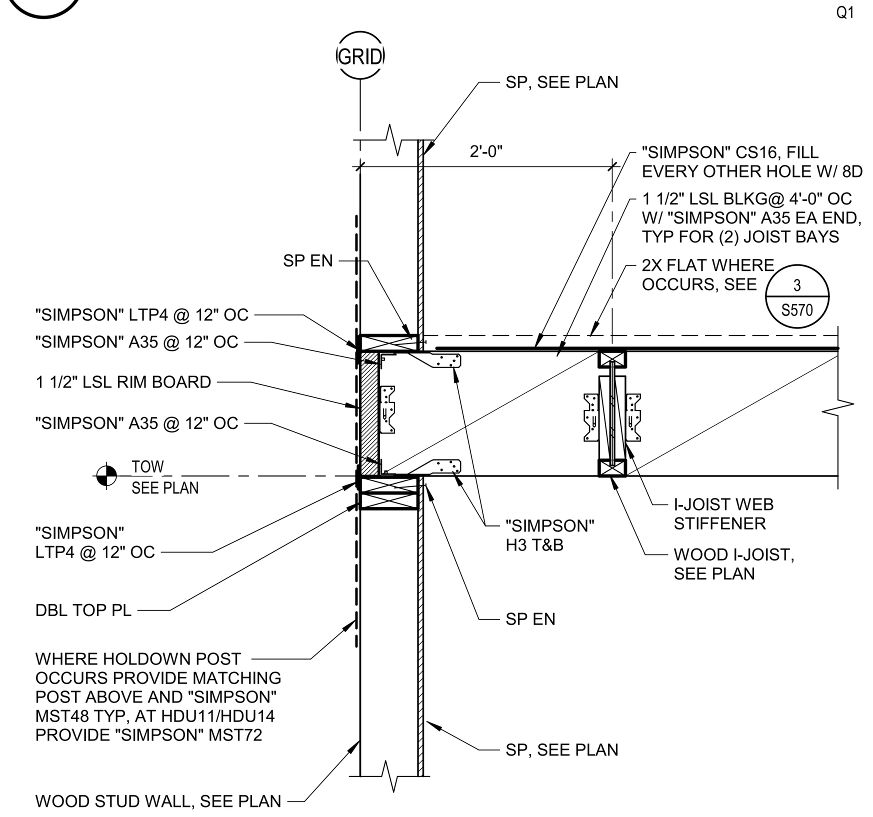

12 DETAIL
1" = 1'-0"
Q1

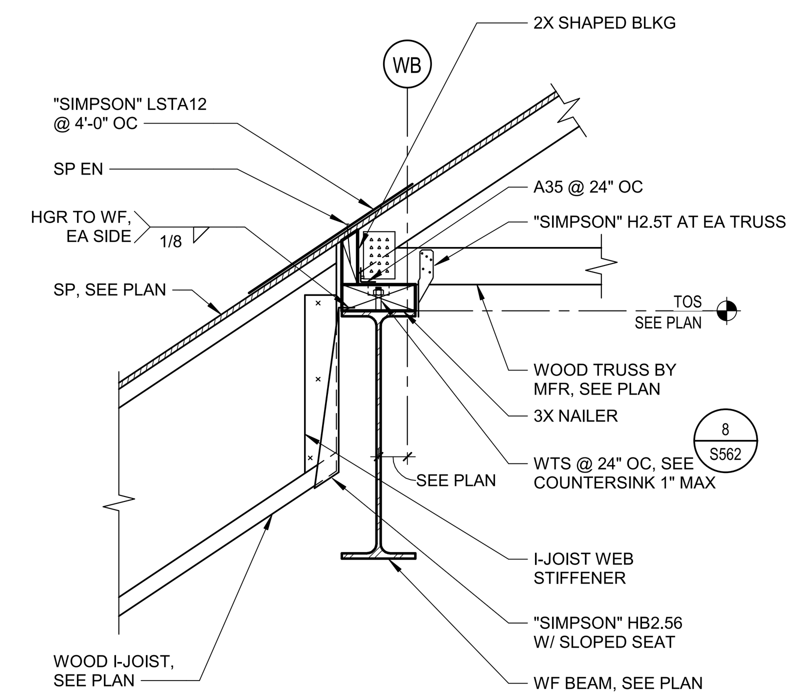

13 DETAIL
1" = 1'-0"
Q1

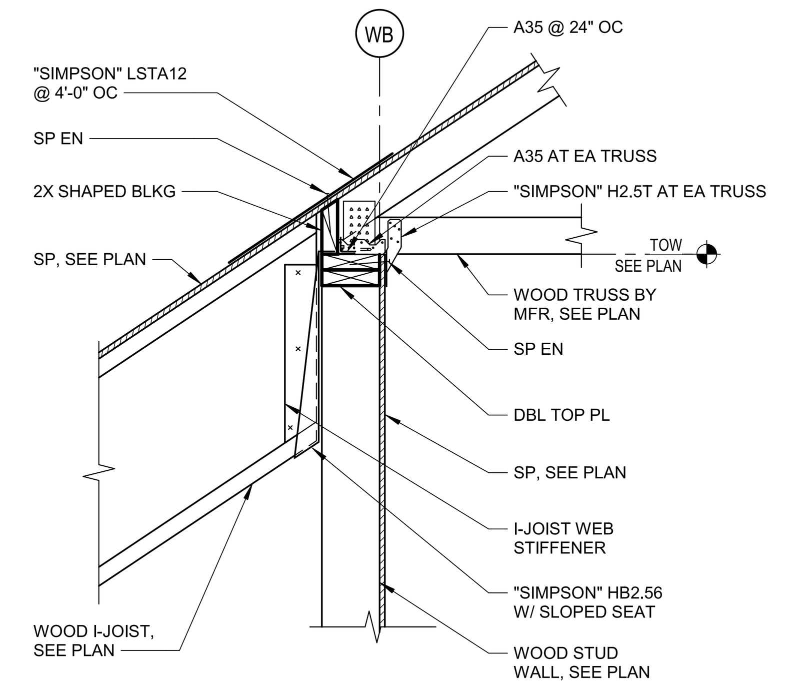

14 DETAIL
1" = 1'-0"
Q1

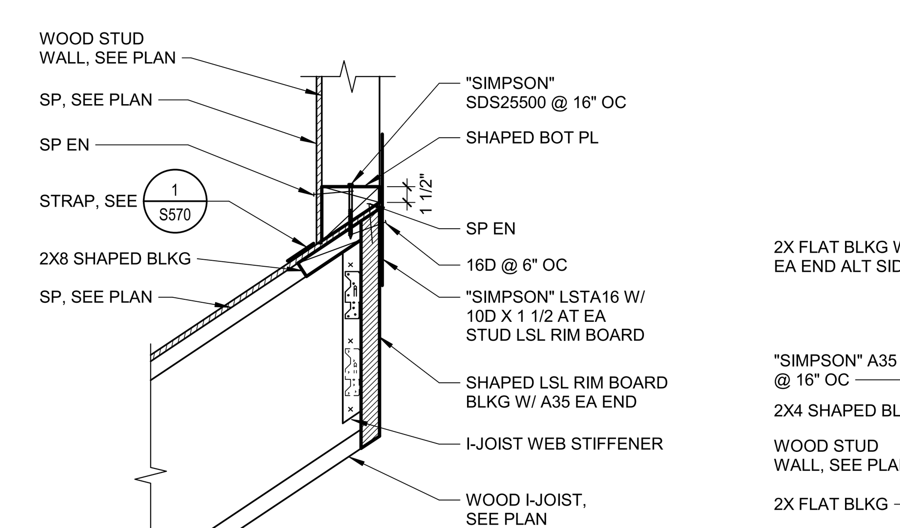

15 DETAIL
1" = 1'-0"
Q1

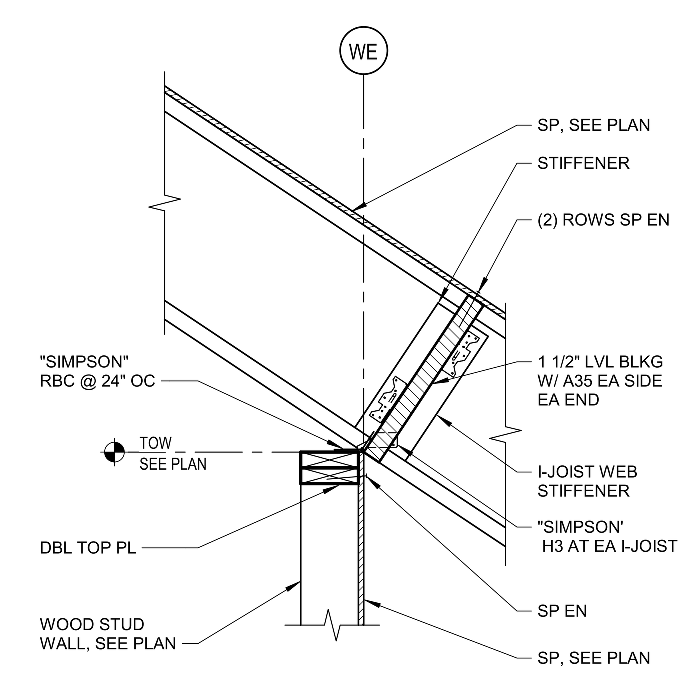

16 DETAIL
1" = 1'-0"
Q1

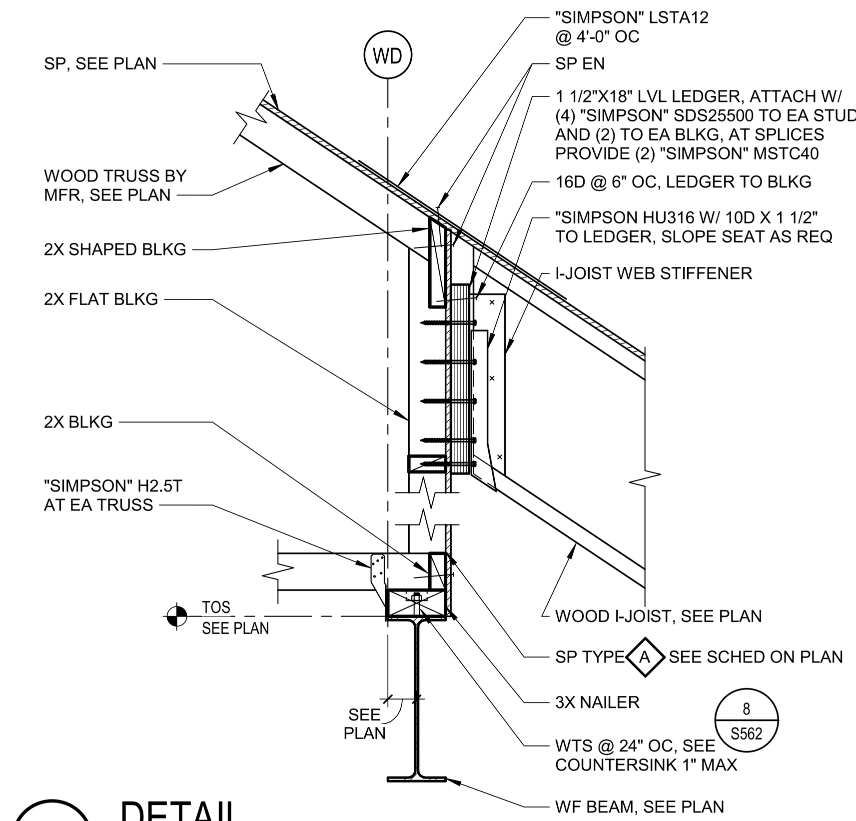

17 DETAIL
1" = 1'-0"
Q1

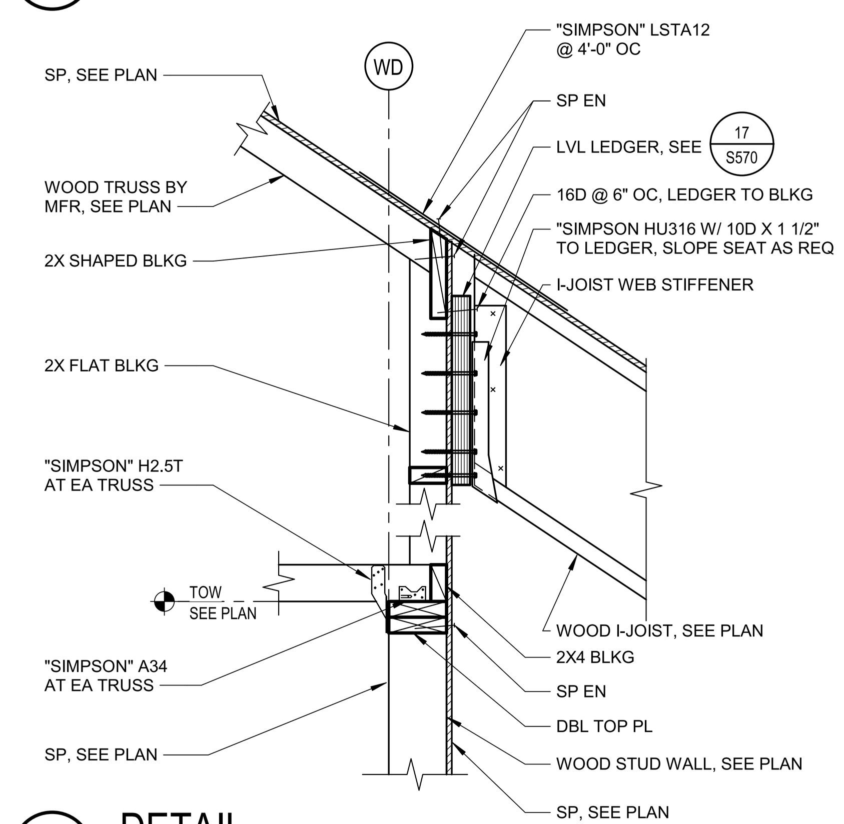

18 DETAIL
1" = 1'-0"
Q1

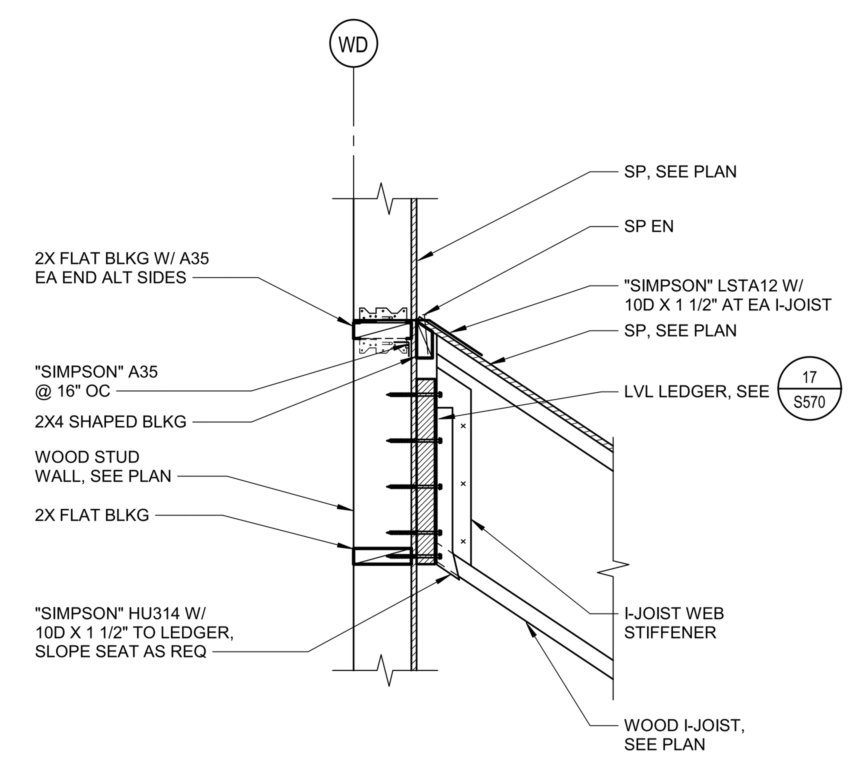

19 DETAIL
1" = 1'-0"
Q1

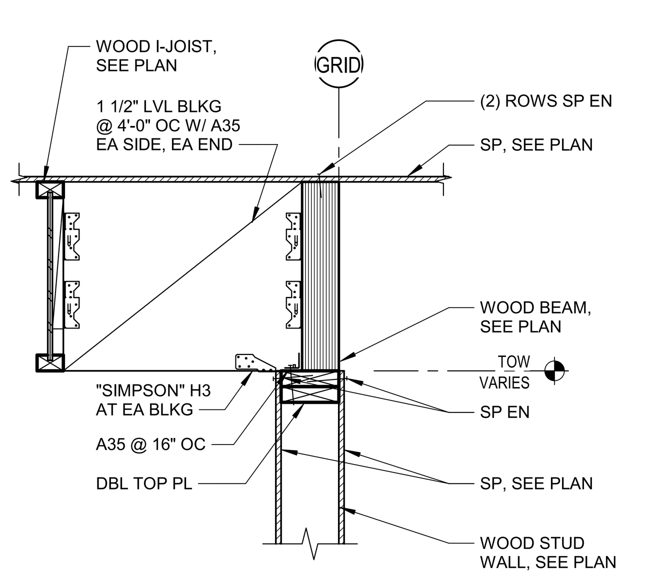

20 DETAIL
1" = 1'-0"
Q1

Plot Date: 3/19/2021 11:24:41 AM
File Name: BIM 360://CCC Willits Residential Center/018322_S-MASTER_R18_CENTRAL.rvt

IDENTIFICATION STAMP
DIV. OF THE STATE ARCHITECT
APP: 02-118630 INC:
REVIEWED FOR
SS ☐ FLS ☐ ACS ☑
DATE: 04/13/2021

OFFICE OF THE STATE FIRE MARSHAL
APPROVED FIRE AND PANIC ONLY
Approval of this plan does not authorize or approve any omission or deviation from applicable regulations. Final approval is subject to field inspection. One set of approved plans shall be available on the project site at all times.
PERMIT NO.: 20-N-2332-CP
REVIEWED BY: LITO CATAYLO, OSFM
DATE: 4/1/2021

DGS GENERAL SERVICES
Department of General Services
State of California
Real Estate Services Division
Project Management & Development Branch
707 Third Street, Suite 4-105
West Sacramento, California 95605

NM&R
NICHOLS MELBURG & ROSSETTO
ARCHITECTS + ENGINEERS
300 Knollcrest Drive
Redding, CA. 96002
(530) 222-3300 (530) 222-3538 FAX
http://www.nmrdesign.com

Copyright © 2021
All ideas, designs, arrangements and plans indicated or represented by this drawing are owned by, and the property of, NICHOLS, MELBURG and ROSSETTO and were created, evolved and developed for use on, and in conjunction with, the specified project. None of such ideas, designs, arrangements or plans shall be used by, or disclosed to any person, firm or corporation for any purpose whatsoever without the written permission of NICHOLS, MELBURG and ROSSETTO.

LICENSE STAMPS
REGISTERED PROFESSIONAL ENGINEER
DARRON E. HUNTINGDALE
No. S4788
STRUCTURAL
STATE OF CALIFORNIA
3/19/2021

STRUCTURAL CONSULTANT
LIONÄKIS
1919 Nineteenth Street
Sacramento CA 95811
P 916.558.1900 F 916.558.1919
www.lionakis.com

DRAWING STATUS
CONSTRUCTION DOCUMENTS

ISSUE

No.	Date	Description
1	10/22/2020	INITIAL PLAN REVIEW
2	01/08/2021	AGENCY RESUBMITTAL
3	03/22/2021	AGENCY RESUBMITTAL

If drawing is not 30" x 42" it is a reduced print

PROJECT
RESIDENTIAL CENTER, UKIAH: REPLACEMENT OF EXISTING RESIDENTIAL CENTER
440 EAST HILL ROAD
WILLITS, CALIFORNIA 95490
MENDOCINO COUNTY
CALIFORNIA CONSERVATION CORP

Supervisor	Designed	Drawn
		Author

DSA Application No.
02-118630

SHEET TITLE
DETAILS - WOOD FRAMING

DGS Project Number	Lionakis Project Number
000000000001826	018322

Reference North
NORTH
Sheet Scale
1" = 1'-0"
Sheet Number
S570

ISSUE DATE
July 9, 2021

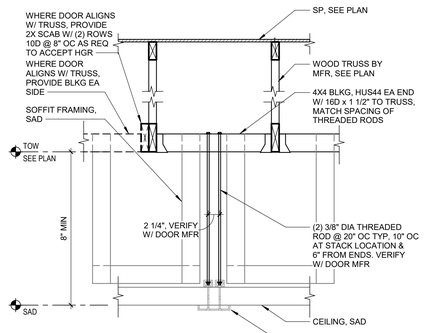

1 DETAIL
1" = 1'-0"
Q1

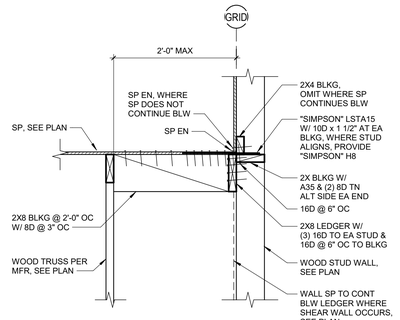

5 DETAIL
1" = 1'-0"
Q1

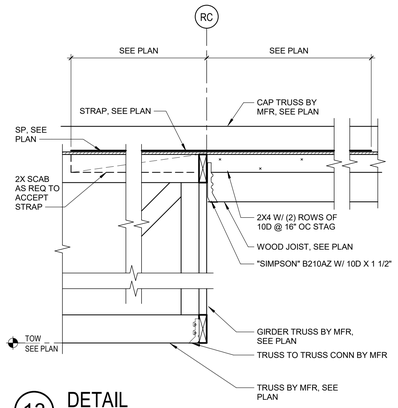

13 DETAIL
1" = 1'-0"
Q1

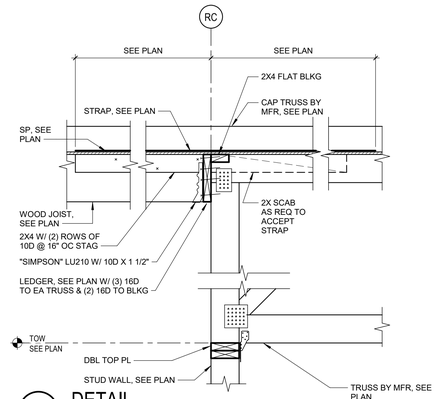

17 DETAIL
1" = 1'-0"
Q1

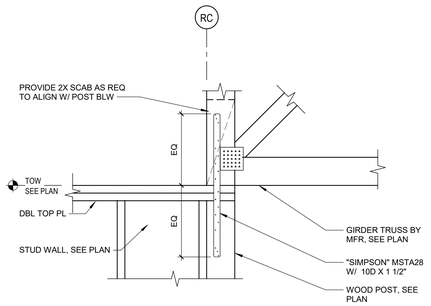

14 DETAIL
1" = 1'-0"
Q1

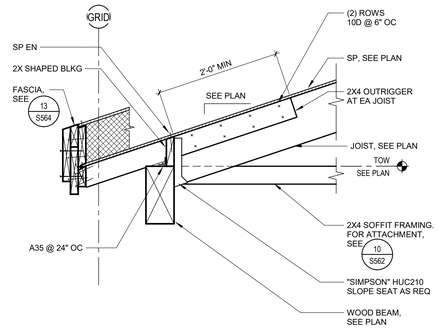

15 DETAIL
1" = 1'-0"
Q1

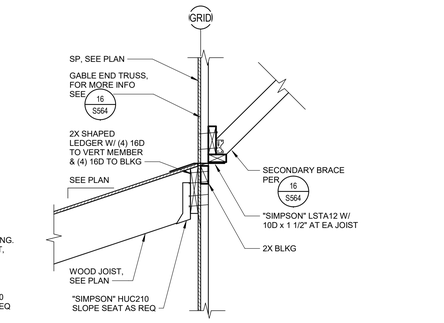

19 DETAIL
1" = 1'-0"
Q1

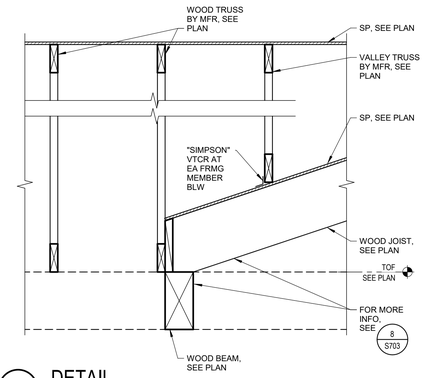

4 DETAIL
1" = 1'-0"
Q1

Plot Date: 3/19/2021 11:24:42 AM
File Name: BIM 360://CC/ Willits Residential Center/018322_S-MASTER_R18_CENTRAL.rvt

IDENTIFICATION STAMP
DIV. OF THE STATE ARCHITECT
APP: 02-118630 INC:
REVIEWED FOR
SS ☐ FLS ☐ ACS ☑
DATE: 04/13/2021

OFFICE OF THE STATE FIRE MARSHAL
APPROVED FIRE AND PANIC ONLY
Approval of this plan does not authorize or approve any omission or deviation from applicable regulations. Final approval is subject to field inspection. One set of approved plans shall be available on the project site at all times.
PERMIT NO: 20-N-2332-CP
REVIEWED BY: LEO CATAYLO, OSFM
DATE: 4 / /2021

DGS
GENERAL SERVICES
Department of General Services
State of California
Real Estate Services Division
Project Management & Development Branch
707 Third Street, Suite 4-105
West Sacramento, California 95605

NICHOLS MELBURG & ROSSETTO
ARCHITECTS + ENGINEERS
300 Knollcrest Drive
Redding, CA 96002
(530) 222-3300 (530) 222-3538 FAX
http://www.nmrdesign.com

Copyright © 2021
All ideas, designs, arrangements and plans indicated or represented by this drawing are owned by, and the property of, NICHOLS, MELBURG and ROSSETTO and were created, evolved and developed for use on, and in conjunction with, the specified project. None of such ideas, designs, arrangements or plans shall be used by, or disclosed to any person, firm or corporation for any purpose whatsoever without the written permission of NICHOLS, MELBURG and ROSSETTO.

LICENSE STAMPS

REGISTERED PROFESSIONAL ENGINEER
JEROME E. HUNTINGFORD
No. S4758
CIVIL
STATE OF CALIFORNIA
3/19/2021

STRUCTURAL CONSULTANT

LIONAKIS
1919 Nineteenth Street
Sacramento CA 95811
P 916.558.1900 F 916.558.1919
www.lionakis.com

DRAWING STATUS
CONSTRUCTION DOCUMENTS

ISSUE

No.	Date	Description
1	10/22/2020	INITIAL PLAN REVIEW
2	01/08/2021	AGENCY RESUBMITTAL
3	03/22/2021	AGENCY RESUBMITTAL

If drawing is not 30" x 42" it is a reduced print

PROJECT
RESIDENTIAL CENTER, UKIAH: REPLACEMENT OF EXISTING RESIDENTIAL CENTER
440 EAST HILL ROAD
WILLITS, CALIFORNIA 95490
MENDOCINO COUNTY
CALIFORNIA CONSERVATION CORP

Supervisor	Designed	Drawn
		Author

DSA Application No.
02-118630

SHEET TITLE
DETAILS - WOOD FRAMING

DGS Project Number: 00000000001826
Lionakis Project Number: 018322

Reference North
Sheet Scale: 1" = 1'-0"
Sheet Number: S571

ISSUE DATE
July 9, 2021

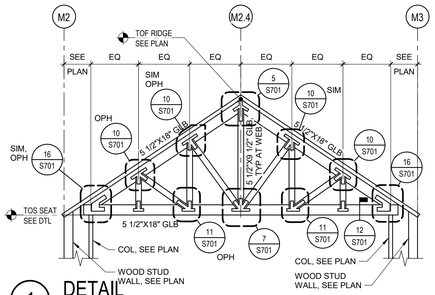

1 DETAIL
1" = 1'-0"
Q1

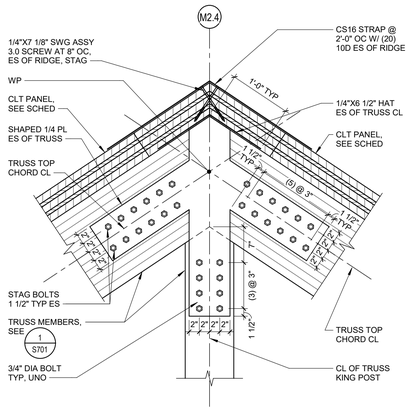

5 DETAIL
1" = 1'-0"
Q1

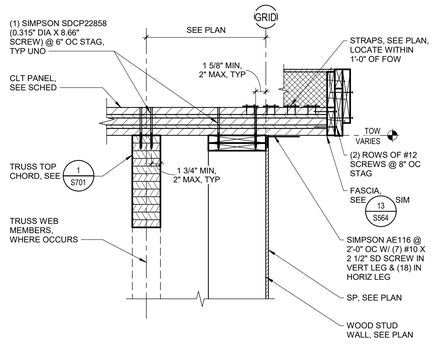

9 DETAIL
1" = 1'-0"
Q1

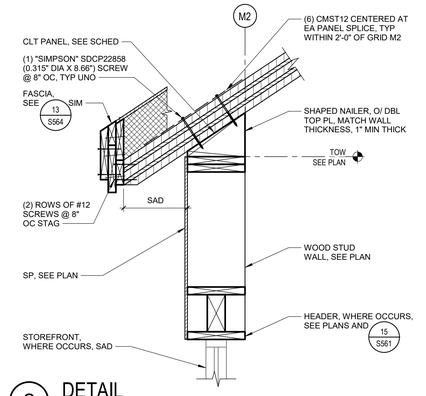

2 DETAIL
1" = 1'-0"
Q1

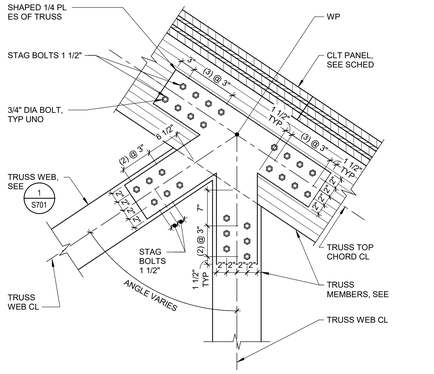

10 DETAIL
1" = 1'-0"
Q1

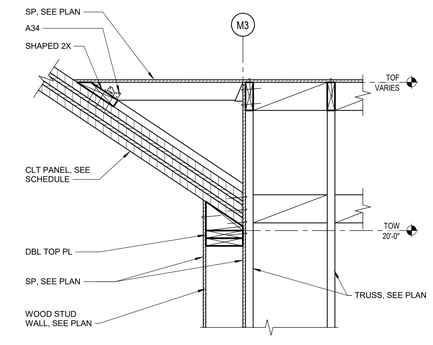

18 DETAIL
1" = 1'-0"
Q1

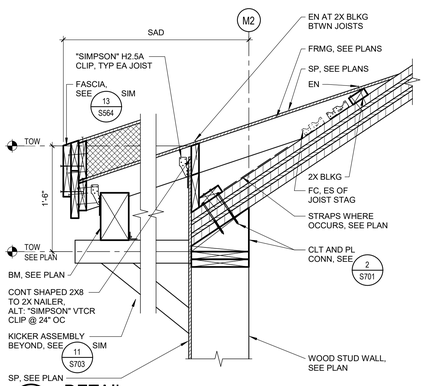

3 DETAIL
1" = 1'-0"
Q1

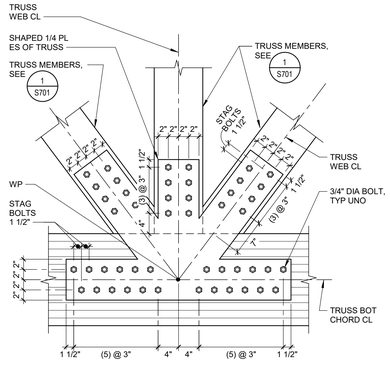

7 DETAIL
1" = 1'-0"
Q1

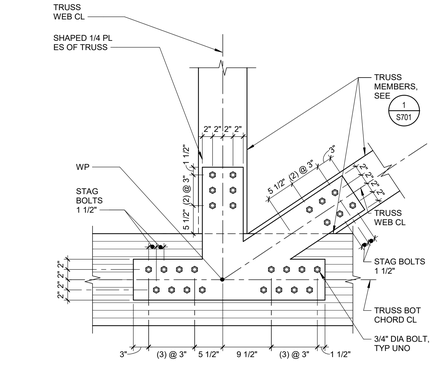

11 DETAIL
1" = 1'-0"
Q1

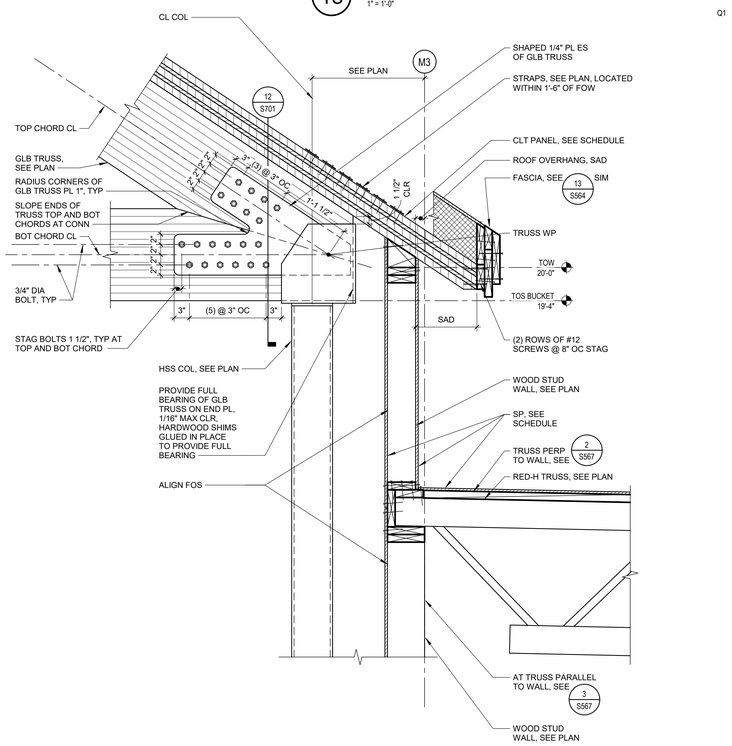

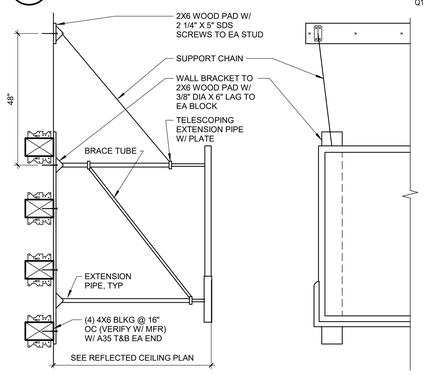

4 BACKSTOP SUPPORT FRAMING
SCALE: NTS
Q1

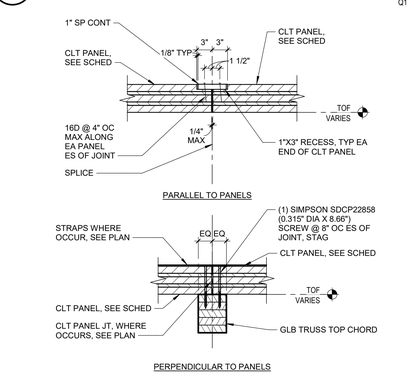

8 CLT PANEL SPLICE
1" = 1'-0"
Q1

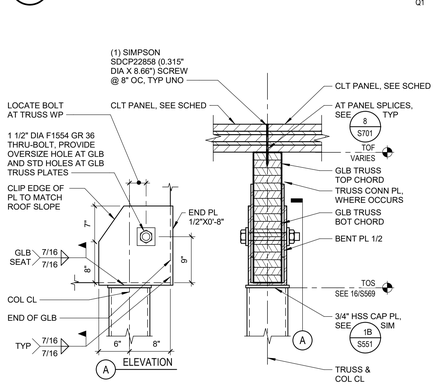

12 GLB TRUSS SEAT
1" = 1'-0"
Q1

16 DETAIL
1" = 1'-0"
Q1

IDENTIFICATION STAMP
DIV. OF THE STATE ARCHITECT
APP: 02-118630 INC:
REVIEWED FOR
SS ☐ FLS ☐ ACS ☑
DATE: 04/13/2021

OFFICE OF THE STATE FIRE MARSHAL
APPROVED FIRE AND PANIC ONLY
Approval of this plan does not authorize or approve any omission or deviation from applicable regulations. Final approval is subject to field inspection. One set of approved plans shall be available on the project site at all times.
PERMIT NO. 20-N-2332-CP
REVIEWED BY: LEO CATAYLO, OSFM
DATE: 4 / /2021

DGS
GENERAL SERVICES
Department of General Services
State of California
Real Estate Services Division
Project Management & Development Branch
707 Third Street, Suite 4-105
West Sacramento, California 95605

NICHOLS MELBURG & ROSSETTO
ARCHITECTS + ENGINEERS
300 Knollcrest Drive
Redding, CA 96002
(530) 222-3300 (530) 222-3538 FAX
http://www.nmrdesign.com

Copyright © 2021
All ideas, designs, arrangements and plans indicated or represented by this drawing are owned by, and the property of, NICHOLS, MELBURG and ROSSETTO and were created, evolved and developed for use on, and in conjunction with, the specified project. None of such ideas, designs, arrangements or plans shall be used by, or disclosed to any person, firm or corporation for any purpose whatsoever without the written permission of NICHOLS, MELBURG and ROSSETTO.

LICENSE STAMPS

STRUCTURAL CONSULTANT
LIONAKIS
1919 Nineteenth Street
Sacramento CA 95811
P 916.558.1900 F 916.558.1919
www.lionakis.com

DRAWING STATUS
CONSTRUCTION DOCUMENTS

ISSUE

No.	Date	Description
1	10/22/2020	INITIAL PLAN REVIEW
2	01/08/2021	AGENCY RESUBMITTAL
3	03/22/2021	AGENCY RESUBMITTAL

If drawing is not 30" x 42" it is a reduced print

PROJECT
RESIDENTIAL CENTER, UKIAH: REPLACEMENT OF EXISTING RESIDENTIAL CENTER
440 EAST HILL ROAD
WILLITS, CALIFORNIA 95490
MENDOCINO COUNTY
CALIFORNIA CONSERVATION CORP

Supervisor	Designed	Drawn
		Author

DSA Application No.
02-118630

SHEET TITLE
CLT AND GLB TRUSS DETAILS

DGS Project Number: 0000000000001826
Lionakis Project Number: 018322

Reference North
Sheet Scale: 1" = 1'-0"
Sheet Number: S701

ISSUE DATE
July 9, 2021

Plot Date: 3/19/2021 11:24:45 AM
File Name: BIM 360://CCC Willits Residential Center/018322_S-MASTER_R18_CENTRAL.rvt

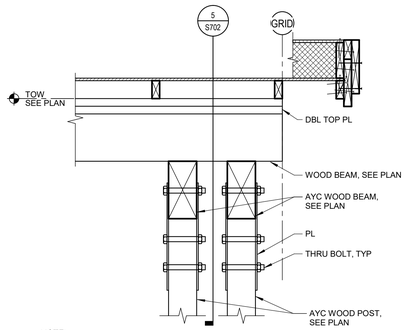

NOTE:
1. EXTERIOR EXPOSED STEEL SHALL BE HOT DIP GALVANIZED

1 DETAIL
1" = 1'-0"

Q1

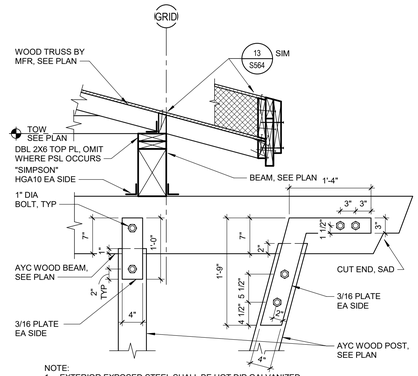

NOTE:
1. EXTERIOR EXPOSED STEEL SHALL BE HOT DIP GALVANIZED

5 DETAIL
1" = 1'-0"

Q1

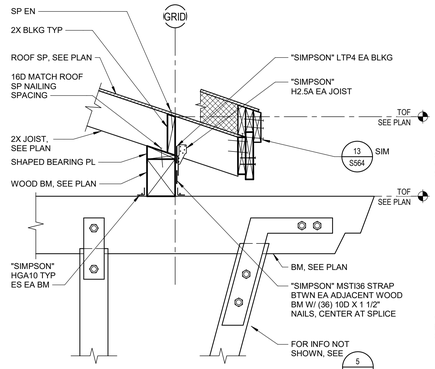

9 DETAIL
1" = 1'-0"

Q1

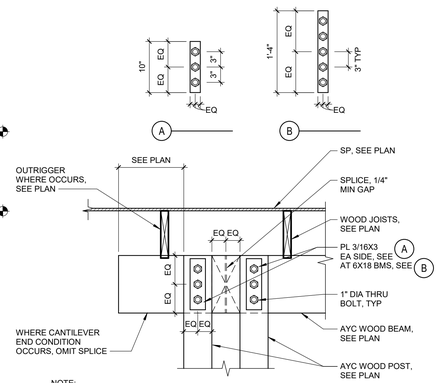

NOTE:
1. EXTERIOR EXPOSED STEEL SHALL BE HOT DIP GALVANIZED

13 DETAIL
1" = 1'-0"

Q1

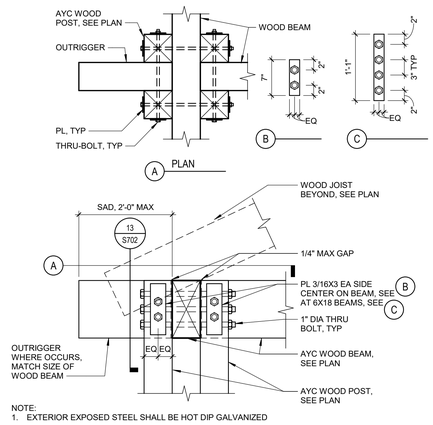

NOTE:
1. EXTERIOR EXPOSED STEEL SHALL BE HOT DIP GALVANIZED

17 DETAIL
1" = 1'-0"

Q1

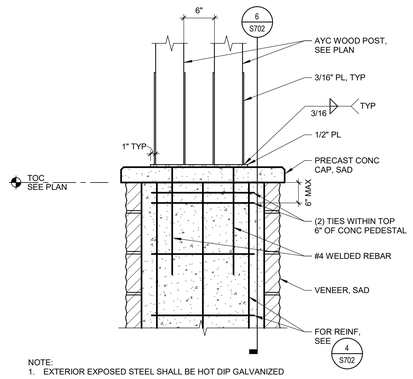

NOTE:
1. EXTERIOR EXPOSED STEEL SHALL BE HOT DIP GALVANIZED

2 DETAIL
1" = 1'-0"

Q1

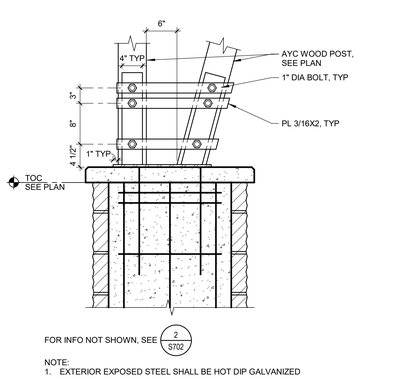

NOTE:
1. EXTERIOR EXPOSED STEEL SHALL BE HOT DIP GALVANIZED

6 DETAIL
1" = 1'-0"

Q1

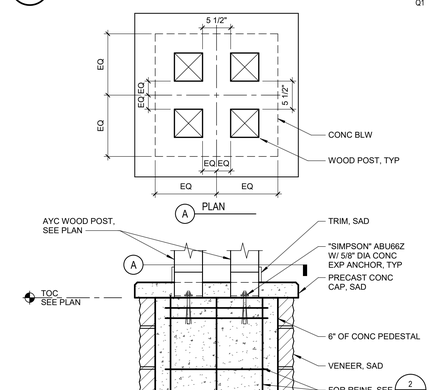

10 DETAIL
1" = 1'-0"

Q1

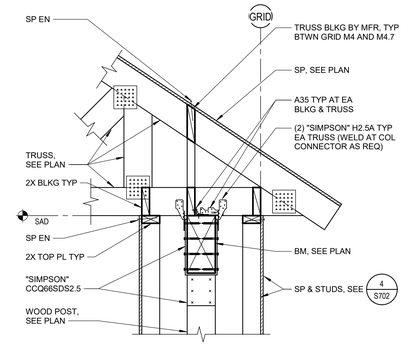

18 DETAIL
1" = 1'-0"

Q1

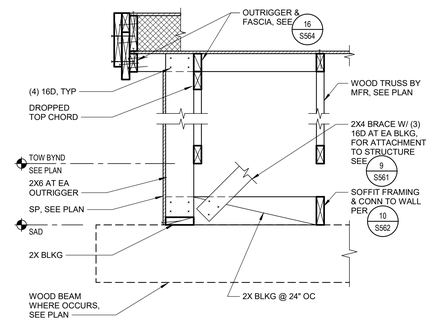

11 DETAIL
1" = 1'-0"

Q1

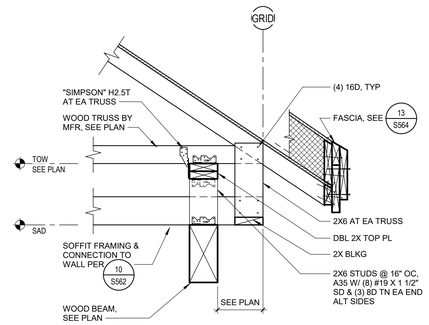

15 DETAIL
1" = 1'-0"

Q1

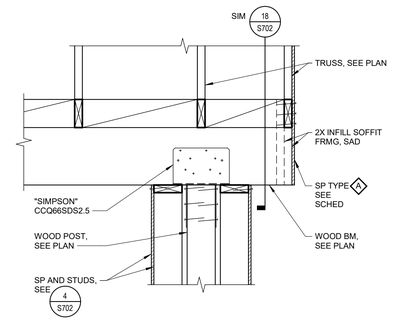

19 DETAIL
1" = 1'-0"

Q1

A PLAN

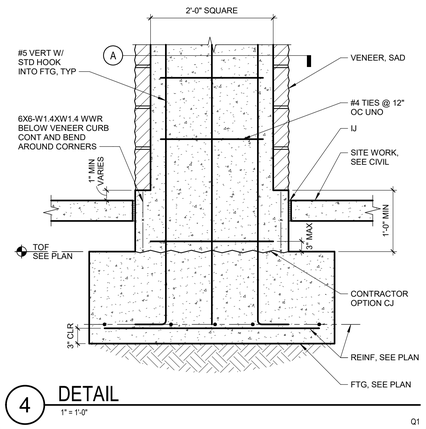

4 DETAIL
1" = 1'-0"

Q1

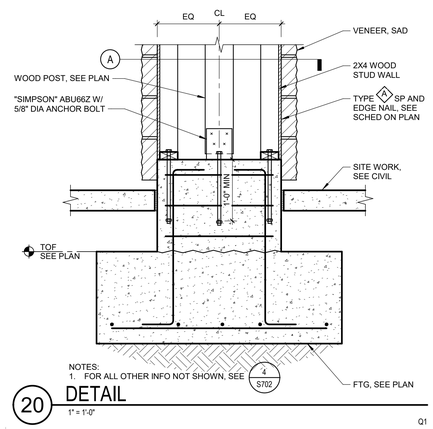

20 DETAIL
1" = 1'-0"

Q1

Plot Date: 3/19/2021 11:24:47 AM
File Name: BIM 360://CCC Willis Residential Center/018322_S-MASTER_R18_CENTRAL.rvt

IDENTIFICATION STAMP
DIV. OF THE STATE ARCHITECT
APP: 02-118630 INC:
REVIEWED FOR
SS ☐ FLS ☐ ACS ☑
DATE: 04/13/2021

OFFICE OF THE STATE FIRE MARSHAL
APPROVED FIRE AND PANIC ONLY
Approval of this plan does not authorize or approve any omission or deviation from applicable regulations. Final approval is subject to field inspection. One set of approved plans shall be available on the project site at all times.
PERMIT NO. 20-N-2332-CP
REVIEWED BY: LEO CATAYLO, OSFM
DATE: 4 / /2021

DGS GENERAL SERVICES
Department of General Services
State of California
Real Estate Services Division
Project Management & Development Branch
707 Third Street, Suite 4-105
West Sacramento, California 95605

NICHOLS MELBURG & ROSSETTO
ARCHITECTS + ENGINEERS
300 Knollcrest Drive
Redding, CA. 96002
(530) 222-3300 (530) 222-3538 FAX
http://www.nmrdesign.com

Copyright © 2021
All ideas, designs, arrangements and plans indicated or represented by this drawing are owned by, and the property of, NICHOLS, MELBURG and ROSSETTO and were created, evolved and developed for use on, and in conjunction with, the specified project. None of such ideas, designs, arrangements or plans shall be used by, or disclosed to any person, firm or corporation for any purpose whatsoever without the written permission of NICHOLS, MELBURG and ROSSETTO.

LICENSE STAMPS

REGISTERED PROFESSIONAL ENGINEER
JAMES E. HUNTINGTON
No. S4709
STRUCTURAL
STATE OF CALIFORNIA
3/19/2021

STRUCTURAL CONSULTANT

LIONAKIS
1919 Nineteenth Street
Sacramento CA 95811
P 916.558.1900 F 916.558.1919
www.lionakis.com

DRAWING STATUS
CONSTRUCTION
DOCUMENTS

ISSUE

No.	Date	Description
1	10/22/2020	INITIAL PLAN REVIEW
2	01/08/2021	AGENCY RESUBMITTAL
3	03/22/2021	AGENCY RESUBMITTAL

If drawing is not 30" x 42" it is a reduced print

PROJECT
RESIDENTIAL CENTER, UKIAH: REPLACEMENT OF EXISTING RESIDENTIAL CENTER
440 EAST HILL ROAD
WILLITS, CALIFORNIA 95490
MENDOCINO COUNTY
CALIFORNIA CONSERVATION CORP

Supervisor	Designed	Drawn
		Author

DSA Application No.
02-118630

SHEET TITLE
DETAILS

DGS Project Number	Lionakis Project Number
0000000000001826	018322

Reference North
Sheet Scale: 1" = 1'-0"
Sheet Number
S702

ISSUE DATE
July 9, 2021

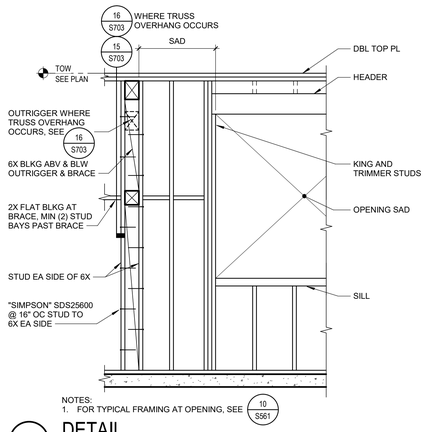

1 DETAIL
1/2" = 1'-0"
Q1

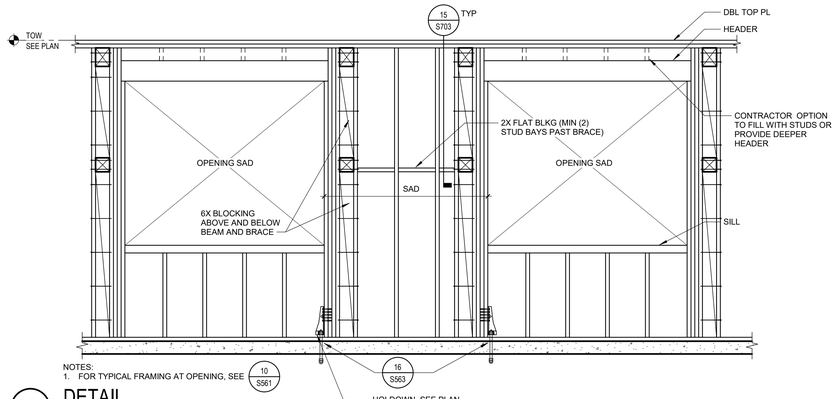

5 DETAIL
1/2" = 1'-0"
Q1

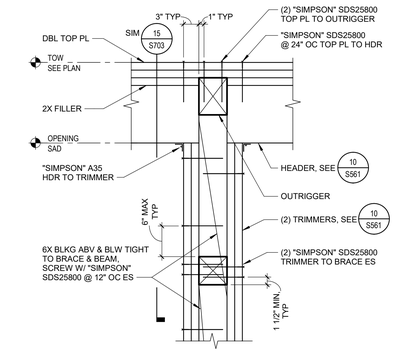

2 DETAIL
1" = 1'-0"
Q1

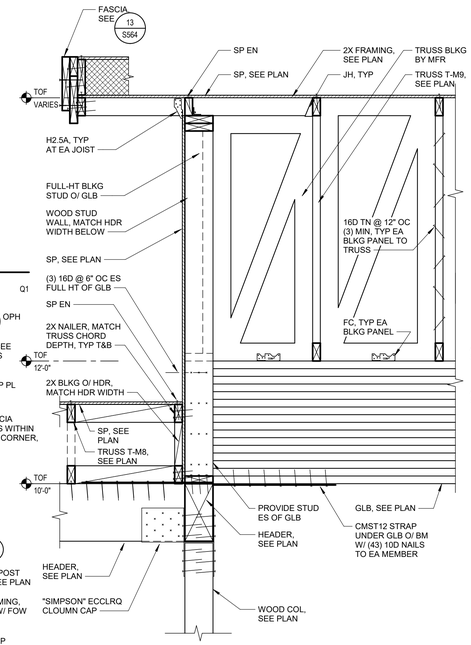

7 DETAIL
1" = 1'-0"
Q1

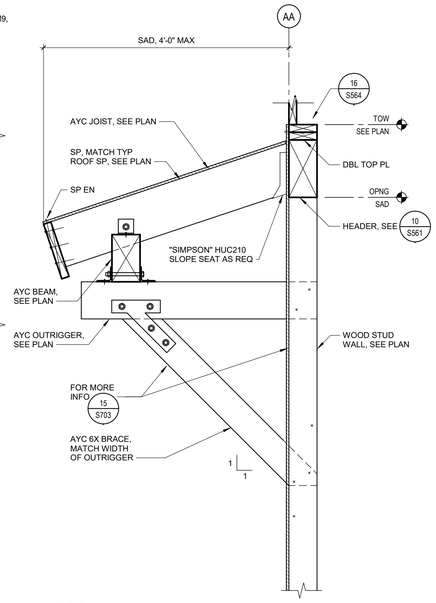

NOTE:
1. EXTERIOR EXPOSED STEEL SHALL BE HOT DIPPED GALVANIZED

11 DETAIL
1" = 1'-0"
Q1

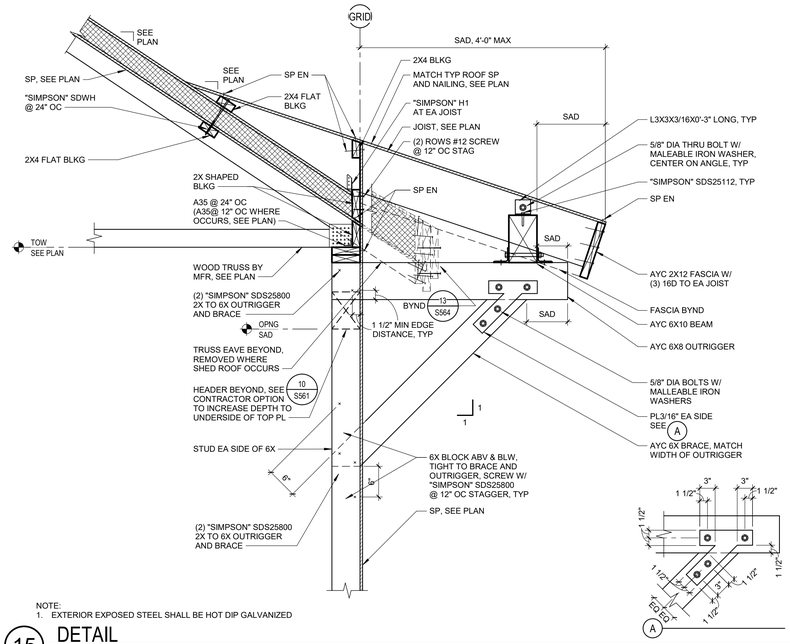

NOTE:
1. EXTERIOR EXPOSED STEEL SHALL BE HOT DIP GALVANIZED

15 DETAIL
1" = 1'-0"
Q1

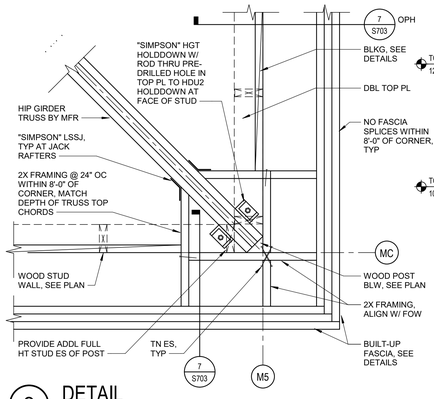

3 DETAIL
1" = 1'-0"
Q1

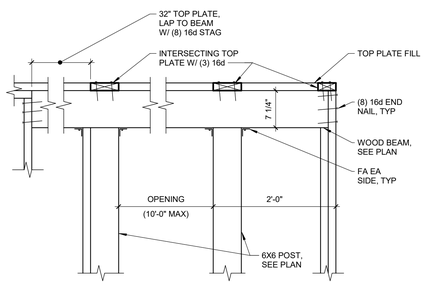

4 DETAIL
1" = 1'-0"
Q1

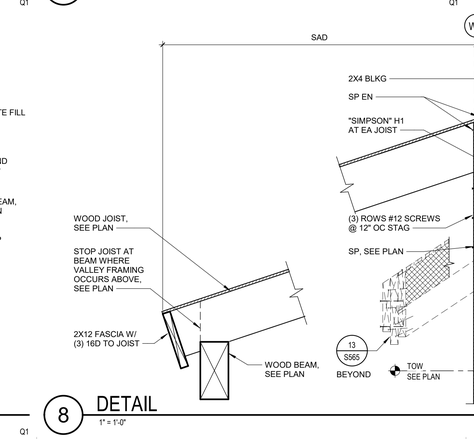

8 DETAIL
1" = 1'-0"
Q1

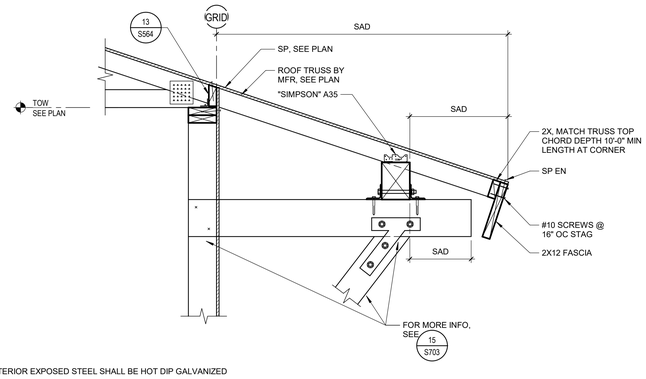

NOTE:
1. EXTERIOR EXPOSED STEEL SHALL BE HOT DIP GALVANIZED

16 DETAIL
1" = 1'-0"
Q1

IDENTIFICATION STAMP
DIV. OF THE STATE ARCHITECT
APP: 02-118630 INC:
REVIEWED FOR
SS ☐ FLS ☐ ACS ☑
DATE: 04/13/2021

OFFICE OF THE STATE FIRE MARSHAL
APPROVED FIRE AND PANIC ONLY
Approval of this plan does not authorize or approve any omission or deviation from applicable regulations. Final approval is subject to field inspection. One set of approved plans shall be available on the project site at all times.
PERMIT NO. 20-N-2332-CP
REVIEWED BY: LEO CATAYLO, OSFM
DATE: 4 / 1 /2021

DGS GENERAL SERVICES
Department of General Services
State of California
Real Estate Services Division
Project Management & Development Branch
707 Third Street, Suite 4-105
West Sacramento, California 95605

NICHOLS MELBURG & ROSSETTO ARCHITECTS + ENGINEERS
300 Knollcrest Drive
Redding, CA. 96002
(530) 222-3300 (530) 222-3538 FAX
http://www.nmrdesign.com

Copyright © 2021
All ideas, designs, arrangements and plans indicated or represented by this drawing are owned by, and the property of, NICHOLS, MELBURG and ROSSETTO and were created, evolved and developed for use on, and in conjunction with, the specified project. None of such ideas, designs, arrangements or plans shall be used by, or disclosed to any person, firm or corporation for any purpose whatsoever without the written permission of NICHOLS, MELBURG and ROSSETTO.

LICENSE STAMPS
REGISTERED PROFESSIONAL ENGINEER JEROME E. HUNTINGTON No. S4750 STRUCTURAL STATE OF CALIFORNIA
3/19/2021

STRUCTURAL CONSULTANT
LIONAKIS
1919 Nineteenth Street
Sacramento CA 95811
P 916.558.1900 F 916.558.1919
www.lionakis.com

DRAWING STATUS
CONSTRUCTION DOCUMENTS

ISSUE

No.	Date	Description
1	10/22/2020	INITIAL PLAN REVIEW
2	01/08/2021	AGENCY RESUBMITTAL
3	03/22/2021	AGENCY RESUBMITTAL

If drawing is not 30" x 42" it is a reduced print

PROJECT
RESIDENTIAL CENTER, UKIAH: REPLACEMENT OF EXISTING RESIDENTIAL CENTER
440 EAST HILL ROAD
WILLITS, CALIFORNIA 95490
MENDOCINO COUNTY
CALIFORNIA CONSERVATION CORP

Supervisor	Designed	Drawn
		Author

DSA Application No.
02-118630

SHEET TITLE
DETAILS - WOOD FRAMING

DGS Project Number	Lionakis Project Number
000000000001826	018322

Reference North: NORTH
Sheet Scale: As indicated
Sheet Number: S703

ISSUE DATE
July 9, 2021

Plot Date: 3/19/2021 11:24:50 AM
File Name: BIM 360://CCC Willis Residential Center/018322_S-MASTER_R18_CENTRAL.rvt

HVAC ABBREVIATIONS

SYMBOL	DESCRIPTION
ABC	ABOVE CEILING
ABV	ABOVE
ACC DR	ACCESS DOOR
ACC P	ACCESS PANEL
ACU	AIR CONDITIONING UNIT
AFF	ABOVE FINISHED FLOOR
AHU	AIR HANDLING UNIT
APD	AIR PRESSURE DROP, INCHES WATER COLUMN
APPROX	APPROXIMATE
ARCH	ARCHITECTURAL
ATTEN	ATTENUATORS
ATV	ACOUSTIC TURNING VANE
BD	BALANCE DAMPER
BDD	BACK DRAFT DAMPER
BHP	BRAKE HORSE POWER
BLDG	BUILDING
BOD	BOTTOM OF DUCT
BOR	BOTTOM OF REGISTER
BTUH	BRITISH THERMAL UNITS PER HOUR
CAP	CAPACITY
CD	CONDENSATE DRAIN
CEF	CEILING EXHAUST FAN
CFH	CUBIC FEET OF GAS PER HOUR
CFM	CUBIC FEET OF AIR FLOW PER MINUTE
CHV	CHECK VALVE
CLG	CEILING
CLR	CLEAR
CONC	CONCRETE
COND	CONDENSER
CONN	CONNECT/CONNECTION
CONT	CONTINUATION
CONTR	CONTRACTOR
D	DAMPER
DGP	DATA GATHERING PANEL
DIA	DIAMETER
DL	DOOR LOUVER
DN	DOWN
DSP	DRY STAND PIPE
DTR	DOWN THROUGH ROOF
DWG	DRAWING
EA	EXHAUST AIR
EAD	EXHAUST AIR DAMPER
EC	EVAPORATIVE COOLER
EDB	ENTERING DRY BULB
EER	ENERGY EFFICIENCY RATING
EF	EXHAUST FAN
EL	ELEVATION
ELEC	ELECTRIC/ELECTRICAL
ENT	ENTERING
EQUIP	EQUIPMENT
ESP	EXTERNAL STATIC PRESSURE
EVAP	EVAPORATOR
EW	ENTERING WATER
EWB	ENTERING WET BULB
EWC	ELECTRIC WATER COOLER
EWT	ENTERING WATER TEMPERATURE
EXH	EXHAUST
f	CUBIC FEET OF AIR FLOW PER MINUTE
F	DEGREES FAHRENHEIT
FA	FROM ABOVE
FB	FROM BELOW
FC	FLEXIBLE CONNECTION
FCV	FLOW CONTROL VALVE
FD	FIRE DAMPER
FF	FLY FAN
FIN	FINISH
FLA	FULL LOAD AMPS
FLR	FLOOR
FPM	FEET PER MINUTE
FSD	FIRE AND SMOKE DAMPER
FT (')	FOOT OR FEET
FT^2	SQUARE FEET
GA	GAUGE
GALV	GALVANIZED
GI	GALVANIZED IRON
GPH	GALLONS PER HOUR
GPM	GALLONS PER MINUTE
HP	HORSE POWER
HTG	HEATING
HV	HAND VALVE
HW	HOT WATER
HWR	HOT WATER RETURN
HWS	HOT WATER SUPPLY
IE	INVERT ELEVATION
IN, (")	INCH
IN^2	SQUARE INCHES
KEF	KITCHEN EXHAUST FAN
KW	KILOWATTS
LAV	LAVATORY
LBS	POUNDS
LD	LOUVERED DOOR
LDB	LEAVING DRY BULB
LRA	LOCKED ROTOR AMPS
LTCP	LOCAL TEMPERATURE CONTROL PANEL
LVR	LOUVER
LWB	LEAVING WET BULB
MAT	MIXED AIR TEMPERATURE
MAU	MAKE-UP AIR UNIT
MAV	MANUAL AIR VENT
MAX	MAXIMUM
MBH	THOUSAND BTUs PER HOUR
MCC	MOTOR CONTROL CENTER
MD	MOTORIZED
MECH	MECHANICAL
MFR	MANUFACTURER
MIN	MINIMUM
OA	OUTSIDE AIR
OAD	OUTSIDE AIR DAMPER
OC	ON CENTER
OD	OUTSIDE DIAMETER
OH	OVERHEAD
OV	OUTLET VELOCITY
PCR	PUMPED CONDENSATE RETURN
PD	PRESSURE DROP
PRV	PRESSURE REDUCING VALVE/ PRESSURE REGULATING VALVE
PSI (G) (A)	POUNDS PER SQUARE INCH (GAUGE) (ABSOLUTE)
RA	RETURN AIR
RAD	RETURN AIR DAMPER
REF	ROOF EXHAUST FAN
RF	RETURN FAN
RPM	REVOLUTIONS PER MINUTE
RV	RELIEF VENTILATOR
S & R	SUPPLY AND RETURN
SA	SUPPLY AIR
SAD	SEE ARCHITECTURAL DRAWINGS
SB	SECURITY BARS
SD	SPLITTER DAMPER
SF	SUPPLY FAN
SG	STEAM GENERATOR
SK	SINK
SM	SHEET METAL
SOV	SHUT OFF VALVE
SP	STATIC PRESSURE
SPD	STATIC PRESSURE DROP
SQ FT	SQUARE FEET
SQ IN	SQUARE INCHES
SS	STAINLESS STEEL
STR	STRAINER
STRUC	STRUCTURAL
TA	TO ABOVE
TB	TO BELOW
T.C.C.	TEMPERATURE CONTROL CONTRACTOR
TCP	TEMPERATURE CONTROL PANEL
TCV	TEMPERATURE CONTROL VALVE
TEMP	TEMPERATURE
TFH	THERMAL FLUID HEATER
THK	THICK
TP	TOTAL PRESSURE
TSP	TOTAL STATIC PRESSURE
TYP	TYPICAL
UCD	UNDERCUT DOOR
UF	UNDERFLOOR
UG	UNDERGROUND
UON	UNLESS OTHERWISE NOTED
UTR	UP THROUGH ROOF
V (VTR)	VENT (VENT THROUGH ROOF)
VD	VOLUME DAMPER
VLV	VALVE
VSD	VARIABLE SPEED DRIVE
VV	VARIABLE AIR VOLUME CONTROLLER
VVRH	VARIABLE AIR VOLUME CONTROLLER WITH REHEAT COIL
WALL MTD (R)	WALL MOUNTED (RECESSED)
WB	WET BULB
WC	WATER CLOSET
WMS	WIRE MESH SCREEN
WP	WORKING PRESSURE
WPD	WATER PRESSURE DROP FEET OF WATER COLUMN
WT	WEIGHT

NOTE: NOT ALL ABBREVIATIONS ARE USED IN DRAWING SET.

MECHANICAL GENERAL NOTES

1. ALL WORK SHALL COMPLY WITH ALL APPLICABLE CODES, SPECIFICATIONS, LOCAL ORDINANCES, AND INDUSTRY STANDARDS.
2. COORDINATE EXACT LOCATION OF EQUIPMENT AND ALL PENETRATIONS THROUGH ROOF, FLOORS, AND WALLS WITH ARCHITECTURAL STRUCTURAL SYSTEMS PRIOR TO COMMENCING WORK.
3. COORDINATE EXACT SIZE AND ROUTING OF DUCTWORK WITH ARCHITECTURAL PLANS, STRUCTURE, AND EQUIPMENT PRIOR TO COMMENCING WORK.
4. SEE ARCHITECTURAL REFLECTED CEILING PLAN FOR EXACT LOCATION OF ALL CEILING DIFFUSERS, REGISTERS, AND GRILLES.
5. FURNISH AND INSTALL MANUAL AIR DAMPERS AT ALL DUCT BRANCH TAKEOFFS TO A SINGLE SUPPLY DIFFUSER.
6. FLEXIBLE DUCTWORK CONNECTIONS TO CEILING DIFFUSERS ARE LIMITED TO 5' MAXIMUM LENGTH.
7. WHERE INLET DUCT DIAMETER AND DIFFUSER NECK SIZE ARE THE SAME (I.E. 9"ø AND 9x9) CONTRACTOR SHALL OVERSIZE THE SHEET METAL PLENUM TO ACCOMODATE THE ROUND DUCT CONNECTION.
8. ALL MANUAL CONTROLS USED BY ROOM OCCUPANTS TO ADJUST SETTINGS SHALL BE MOUNTED NOT HIGHER THAN 48" ABOVE FINISHED FLOOR TO TOP OF BOX.
9. FOR PIPING THROUGH EXTERIOR WALLS, SEE DETAIL 13/A800 AND 17/A800.

SYMBOLS LEGEND

SYMBOL	ABBREVIATION	DESCRIPTION
	---	3 WAY MODULATING CONTROL VALVE
	---	3 WAY TWO POSITION CONTROL VALVE
	---	3 WAY VALVE
	---	ANCHOR
	---	ANGLE GLOBE VALVE
	AVN	ANGLE VALVE
	AQ	AQUASTAT
	AD	AREA DRAIN
	---	AUTOMATIC AIR VENT
	---	AUTOMATIC FLOW CONTROL
BD	BDD	BACK DRAFT DAMPER
	BFP, BP, DCW	BACKFLOW PREVENTER, REDUCE PRESSURE, DOUBLE CHECKVALVE
	---	BALANCING VALVE
	---	BALL JOINT
	---	BALL VALVE
	---	BOTTOM CONNECTION
	---	BUTTERFLY VALVE
BPT	BPT	BYPASS TIMER
	CBV	CALIBRATED BALANCE VALVE
	CB, RD	CATCH BASIN, ROOF DRAIN
	---	CHECK VALVE
	---	CIRCUIT SETTER VALVE
	CP	CIRCULATING PUMP
	CO	CLEANOUT
DS	DS	DYNAMIC SENSOR
	---	ECCENTRIC REDUCER
	EJ	EXPANSION JOINT
F	FD	FIRE DAMPER
	FDC	FIRE DEPARTMENT CONNECTION
	FHC	FIRE HOSE RACK AND CABINET
	FH	FIRE HYDRANT
FS	FS	FIRE/SMOKE DAMPER
	---	FLEXIBLE CONNECTOR
	---	FLOAT & THERMOSTATIC TRAP
	FD	FLOOR DRAIN
	FS	FLOOR SINK
	---	FLOW ARROW
FE	---	FLOW ELEMENT
	FLV	FLOW LIMITING VALVE
FS	FS	FLOW SWITCH
	GCK	GAGE COCK

SYMBOLS LEGEND

SYMBOL	ABBREVIATION	DESCRIPTION
	GSCK, PC	GAS COCK, PLUG COCK
	GM	GAS METER
	GPR	GAS PRESSURE REGULATOR
	---	GATE VALVE WITH HOSE ADAPTER
	---	GATE VALVE
	---	GLOBE VALVE
	HD	HOPPER DRAIN
	HB	HOSE BIBB
	HB	HOSE BIBB
H X	H	HUMIDISTAT, MOUNTED 48" AFF (TO TOP OF STAT)
	---	INVERTED BUCKET TRAP
	---	LIMIT OF DEMOLITION
	---	MANUAL AIR VENT
	---	MODULATING CONTROL VALVE
	---	PIPE BREAK
	---	PIPE CAP
	---	PIPE DOWN
	---	PIPE GUIDE
	---	PIPE UP
	---	POINT OF CONNECTION
	PIV	POST INDICATOR VALVE
	PRV	PRESSURE REGULATING VALVE
	---	PRESSURE RELIEF VALVE
	---	REDUCER
SD	SD	SMOKE DAMPER
SD	SKD	SMOKE DETECTOR
	---	SOLENOID VALVE
	---	STRAINER
TS X	TS	TEMPERATURE SENSOR
	---	TEST PLUG
	---	THERMOMETER
T X	T	THERMOSTAT, MOUNTED 48" AFF (TO TOP OF STAT)
	TP	TRAP PRIMER
	---	TWO POSITION CONTROL VALVE
	---	UNION
	---	VALVE IN RISER/DROP
	VB	VALVE IN VALVE BOX
	---	WALL CLEANOUT
	WHA	WATER HAMMER ARRESTOR
WM	WM	WATER METER

NOTE: NOT ALL SYMBOLS AND ABBREVIATIONS ARE USED IN DRAWING SET.

MEP COMPONENT ANCHORAGE NOTE

ALL MECHANICAL, PLUMBING, AND ELECTRICAL COMPONENTS SHALL BE ANCHORED AND INSTALLED PER THE DETAILS ON THE DSA APPROVED CONSTRUCTION DOCUMENTS. WHERE NO DETAIL IS INDICATED, THE FOLLOWING COMPONENTS SHALL BE ANCHORED OR BRACED TO MEET THE FORCE AND DISPLACEMENT REQUIREMENTS PRESCRIBED IN THE 2019 CBC, SECTIONS 1617A.1.18 THROUGH 1617A.1.26 AND ASCE 7-16 CHAPTERS 13, 29 AND 30.

1. ALL PERMANENT EQUIPMENT AND COMPONENTS.
2. TEMPORARY OR MOVABLE EQUIPMENT THAT IS PERMANENTLY ATTACHED (e.g. HARD WIRED) TO THE BUILDING UTILITY SERVICES SUCH AS ELECTRICITY, GAS OR WATER.
3. MOVABLE EQUIPMENT THAT IS HEAVIER THAN 400 POUNDS OR HAS A CENTER OF MASS LOCATED 4 FEET OR MORE ABOVE THE ADJACENT FLOOR OR ROOF THAT DIRECTLY SUPPORT THE EQUIPMENT ARE TO BE ANCHORED WITH TEMPORARY ATTACHMENTS.

THE ATTACHMENT OF THE FOLLOWING MECHANICAL AND ELECTRICAL COMPONENTS SHALL BE POSITIVELY ATTACHED TO THE STRUCTURE, BUT NEED NOT BE DETAILED ON THE PLANS. THESE COMPONENTS SHALL HAVE FLEXIBLE CONNECTIONS PROVIDED BETWEEN THE COMPONENT AND ASSOCIATED DUCTWORK, PIPING, AND CONDUIT.

A. COMPONENTS WEIGHING LESS THAN 400 POUNDS AND HAVE A CENTER OF MASS LOCATED 4 FEET OR LESS ABOVE THE ADJACENT FLOOR OR ROOF LEVEL THAT DIRECTLY SUPPORT THE COMPONENT.
B. COMPONENTS WEIGHING LESS THAN 20 POUNDS, OR IN THE CASE OF DISTRIBUTION SYSTEMS, LESS THAN 5 POUNDS PER FOOT, WHICH ARE SUSPENDED FROM A ROOF OR FLOOR OR HUNG FROM A WALL.

FOR THOSE ELEMENTS THAT DO NOT REQUIRE DETAILS ON THE APPROVED DRAWINGS, THE INSTALLATION SHALL BE SUBJECT TO THE APPROVAL OF THE STRUCTURAL ENGINEER OF RECORD AND THE DSA DISTRICT STRUCTURAL ENGINEER. THE PROJECT INSPECTOR WILL VERIFY THAT ALL COMPONENTS AND EQUIPMENT HAVE BEEN ANCHORED IN ACCORDANCE WITH ABOVE REQUIREMENTS.

PIPING, DUCTWORK & ELECTRICAL DISTRIBUTION SYSTEM BRACING NOTE

PIPING, DUCTWORK, AND ELECTRICAL DISTRIBUTION SYSTEMS SHALL BE BRACED TO COMPLY WITH THE FORCES AND DISPLACEMENTS PRESCRIBED IN ASCE 7-16 SECTION 13.3 AS DEFINED IN ASCE 7-16 SECTION 13.6.5, 13.6.6, 13.6.7, AND 2019 CBC, SECTIONS 1616A.1.23, 1616A.1.24, 616A.1.25 AND 1616A.1.26.

THE BRACING AND ATTACHMENTS TO THE STRUCTURE SHALL BE DETAILED ON THE APPROVED DRAWINGS OR THEY SHALL COMPLY WITH ONE OF THE OSHPD PRE-APPROVALS (OPM #)

COPIES OF THE MANUAL SHALL BE AVAILABLE ON THE JOBSITE PRIOR TO THE START OF HANGING THE BRACING OF THE PIPE, DUCTWORK, AND ELECTRICAL DISTRIBUTION SYSTEMS.

THE STRUCTURAL ENGINEER OF RECORD SHALL VERIFY THE ADEQUACY OF THE STRUCTURE TO SUPPORT THE HANGER AND BRACE LOADS.

DUCT LEGEND

SINGLE LINE SYMBOL	DOUBLE LINE SYMBOL	DESCRIPTION
24x12	24x12	RECTANGULAR DUCT: WIDTH x DEPTH (PLAN VIEW) DEPTH x WIDTH (SECTION VIEW)
26x14L	26x14L	ACOUSTICALLY LINED RECTANGULAR DUCT - DIMENSIONS ARE OUTSIDE
		MANUAL AIR DAMPER
R or D	R or D	RISE OR DROP DUCT IN DIRECTION OF AIR FLOW
	OR	RECTANGULAR TO RECTANGULAR TRANSISTION OR ROUND TO ROUND TRANSITION, MAX. SLOPE OF 1:3
		RECTANGULAR TO ROUND TRANSITION, MAX. SLOPE OF 1:3
	W; R; R/W = 1.5	ELBOW, RECTANGULAR, SMOOTH RADIUS, WITHOUT TURNING VANES
		SQUARE/RECTANGULAR DUCT ELBOW WITH TURNING VANES
		CONVERGING OR DIVERGING TEE, 45° ENTRY, RECTANGULAR MAIN AND BRANCH. WHEN REDUCING MAIN, SIDE OF TAKE OFF OR ENTRY BRANCH TO BE FLAT, OTHER SIDES MAX. SLOPE OF 1:3
ROUND DUCT		ROUND DUCT TAKE OFF FROM RECTANGULAR VIA SMOOTH CONVERGING BELL MOUTH
		RECTANGULAR DUCT TEE MAD'S ON THE 2 BRANCHES, THROAT SIZED FOR EQUAL PRESSURE DROP
		RECTANGULAR DUCT SPLIT MAD'S, THROAT SIZED FOR EQUAL PRESSURE DROP
		3-WAY RECTANGULAR SPLIT WITH TWO TRANSITIONAL ELBOWS AND TRANSITIONING MAIN. DOWNSTREAM MAD'S OF THE TREE BRANCHES. THROATS SIZED FOR EQUAL PRESSURE DROP.
		FOR CONCEALED DUCT: DROP TO DIFFUSER SHALL BE FULL SIZE OF DIFFUSER NECK. fOR EXPOSED DUCT: DROP SHALL BE FULL SIZE OF OD DIFFUSER FRAME, FLANGE FOR MOUNTING DIFFUSER TURNED IN. AIR EXTRACTOR AND EQUALIZER GRID AT CONNECTION TO MAIN.
		SUPPLY AIR, SUPPLY DROP/RISE
		RETURN AIR, RETURN AIR DROP/RISE
		EXHAUST AIR, EXHAUST AIR DROP/RISE
		NEW - FLEXIBLE DUCT (ROUND)
	OR	EXISTING - FLEXIBLE DUCT (ROUND)
10"Ø, 18"Ø, 12"Ø	10"Ø, 18"Ø, 12"Ø	45° REDUCING LATERAL FITTING
18"Ø, 10"Ø, 12"Ø	18"Ø, 10"Ø, 12"Ø	90° REDUCING TEE FITTING

TABLE OF BRANCH DUCT (SA, RA, EA) SIZES TO INDIVIDUAL DIFFUSERS, GRILLES, & REGISTERS

CFM	DUCT SIZE (INCHES) (1)				REMARKS (3) (4)
	ROUND	SQUARE	RECTANGULAR	MIN. AREA (SQ. IN.) (2)	
0-210	8"	8x8	8x6	48	8x8 MIN ON RA & EA
211-380	10"	10x10	10x8	80	
381-600	12"	12x12	12x10, 16x8	120	
601-900	14"	14x14	14x12, 16x10, 20x8	160	
901-1300	16"	16x16	16x14, 18x12, 22x10	220	
1301-1800	18"	18x18	18x16, 20x14, 22x12	264	
1801-2400	20"	20x20	22x16, 24x14, 30x12	340	

NOTES:

(1) SIZE OF BRANCH DUCT IF SHOWN ON PLANS OR FROM ABOVE TABLE IS NOT THE INLET SIZE TO DIFFUSER, GRILLE OR REGISTER. PROVIDE PLENUM BOX SEE NOTE (3)

(2) MINIMUM DUCT AREA TO BE USED FOR ALTERNATE DUCT SIZES (DIFFERENT THAN THIS TABLE) WHEN REQUESTED BY CONTRACTOR FOR SA, RA, AND EA.

(3) SEE 1/M500 FOR PLENUM BOX AT DIFF/REG/GRILLE AND FOR DETAIL OF DUCT BRANCH CONNECTION TO OUTLET (AND INLET) PLENUMS AT DIFF/REG/GRILLE.

(4) ALL DUCT SIZES SHALL BE SHOWN CLEARLY ON THE CONTRACTOR'S SUBMITTAL DRAWINGS. SHOW SIZE OF EACH DUCT ON THE PLANS AT EACH DUCT LOCATION.

IDENTIFICATION STAMP
DIV. OF THE STATE ARCHITECT
APP: 02-118630 INC:
REVIEWED FOR
SS ☐ FLS ☐ ACS ☑
DATE: 04/13/2021

OFFICE OF THE STATE FIRE MARSHAL
APPROVED FIRE AND PANIC ONLY
Approval of this plan does not authorize or approve any omission or deviation from applicable regulations. Final approval is subject to field inspection. One set of approved plans shall be available on the project site at all times.
PERMIT NO.: 20-N-2332-CP
REVIEWED BY: LITO CATAYLO, OSFM [signature]
DATE: 3/ 1 /2021

DGS
GENERAL SERVICES

Department of General Services
State of California
Real Estate Services Division
Project Management & Development Branch
707 Third Street, Suite 4-105
West Sacramento, California 95605

NM&R
NICHOLS MELBURG & ROSSETTO
ARCHITECTS + ENGINEERS
300 Knollcrest Drive
Redding, CA. 96002
(530) 222-3300 (530) 222-3538 FAX
http://www.nmrdesign.com

Copyright © 2019
All ideas, designs, arrangements and plans indicated or represented by this drawing are owned by, and the property of, NICHOLS, MELBURG and ROSSETTO and were created, evolved and developed for use on, and in conjunction with, the specified project. None of such ideas, designs, arrangements or plans shall be used by, or disclosed to any person, firm or corporation for any purpose whatsoever without the written permission of NICHOLS, MELBURG and ROSSETTO.

LICENSE STAMPS
REGISTERED PROFESSIONAL ENGINEER
M 33498
EXPIRES 9/30/22
MECHANICAL
STATE OF CALIFORNIA
[signature]
DATE SIGNED: 10-20-20

CONSULTANT
CAPITAL ENGINEERING CONSULTANTS, INC.
RANCHO CORDOVA, CALIFORNIA
JD - HC/JH — PM - DESIGN TEAM
181205.00 — PROJECT NO.

DRAWING STATUS
CONSTRUCTION DOCUMENTS

ISSUE

No.	Date	Description
1	10/22/2020	INITIAL PLAN REVIEW
2	01/22/2021	AGENCY RESUBMITTAL
3	03/22/2021	AGENCY RESUBMITTAL

If drawing is not 30" x 42" it is a reduced print

PROJECT
RESIDENTIAL CENTER, UKIAH: REPLACEMENT OF EXISTING RESIDENTIAL CENTER
440 EAST HILL ROAD
WILLITS, CALIFORNIA 95490
MENDOCINO COUNTY
CALIFORNIA CONSERVATION CORPS

Supervisor | Designed | Drawn: Author

DSA Application No.: 02-118630

SHEET TITLE
HVAC LEGENDS & NOTES

DGS Project Number: 000000000001826
NMR Project Number: 18-6456
Sheet Scale: As indicated
Sheet Number: M001
ISSUE DATE: July 9, 2021

Plot Date: 3/19/2021 1:31:13 PM
File Name: L:\Revit Local Files\CECI_DGS CCC Willits_Admin_MP18\CECI_DGS CCC Willits_Admin_MP18_jduval.rvt

VRF BRANCH SELECTOR SCHEDULE

EQUIPMENT TAG				# OF	SYSTEM	ELECTRICAL DATA			OPER.	MOUNTING	CONTROL
TYPE	UNIT #	MANUFACTURER	MODEL	PORTS	SERVED	VOLT/PH	MCA	MOP	WT. [LBS]	DETAIL	DIAGRAM
BS	A-1	DAIKIN	BS12QS4TVJ	12	HP-A-1	208/1	1.2	15	125	4/M500	1/M601
BS	C-1	DAIKIN	BS4QS4TVJ	4	HP-C-1	208/1	0.4	15	60	4/M500	1/M601
BS	E-1	DAIKIN	BS12QS4TVJ	12	HP-E-1	208/1	1.2	15	125	4/M500	1/M601
BS	HM-1	DAIKIN	BS6QS4TVJ	6	HP-HM-1	208/1	0.6	15	80	4/M500	1/M601
BS	HW-1	DAIKIN	BS6QS4TVJ	6	HP-HW-1	208/1	0.6	15	80	4/M500	1/M601
BS	MP-1	DAIKIN	BS4QS4TVJ	4	HP-MP-1	208/1	0.4	15	60	4/M500	1/M601
BS	R-1	DAIKIN	BS8QS4TVJ	8	HP-R-1	208/1	0.8	15	90	4/M500	1/M601
BS	W-1	DAIKIN	BS6QS4TVJ	6	HP-W-1	208/1	0.6	15	80	4/M500	1/M601

VRF HEAT PUMP SCHEDULE

EQUIPMENT TAG				COOLING	HEATING		MODULE 1		MODULE 2		COMPRESSOR	OPER.	MOUNTING	CONTROL	
TYPE	UNIT #	MANUFACTURER	MODEL	CAP. [BTUH]	CAP. [BTUH]	VOLT/PH	MCA	MOP	MCA	MOP	RLA	WT. [LBS]	DETAIL	DIAGRAM	NOTES
HP	A-1	DAIKIN	REYQ144XAYDA	143,945	115,195	460/3	27.9	40	-	-	19.3	950	5/M500	1/M601	1 THRU 4
HP	C-1	DAIKIN	REYQ72XATJA	70,276	74,693	208/3	38.1	45	-	-	20.8	875	5/M500	1/M601	1 THRU 4
HP	E-1	DAIKIN	REYQ192XAYDA	194,640	178,756	460/3	21.1	25	21.1	25	11.2	1750	5/M500	1/M601	1 THRU 4
HP	HM-1	DAIKIN	REYQ72XATJA	68,057	74,327	208/3	38.1	45	-	-	20.8	875	5/M500	1/M601	1 THRU 4
HP	HW-1	DAIKIN	REYQ72XATJA	68,057	74,327	208/3	38.1	45	-	-	20.8	875	5/M500	1/M601	1 THRU 4
HP	MP-1	DAIKIN	REYQ72XAYDA	68,057	74,327	460/3	18.9	25	-	-	9.4	875	5/M500	1/M601	1 THRU 4
HP	R-1	DAIKIN	REYQ192XAYDA	194,640	178,756	460/3	21.1	25	21.1	25	11.2	1750	5/M500	1/M601	1 THRU 4
HP	W-1	DAIKIN	REYQ72XAYDA	68,057	74,327	460/3	18.9	25	-	-	9.4	875	5/M500	1/M601	1 THRU 4

NOTES:

1. PROVIDE UNITS WITH R-410A REFRIGERANT.
2. AMBIENT OUTDOOR COOLING = 95 DEG F, HEATING = 18 DEG F.
3. SEE M400 FOR VRF PIPING DIAGRAMS.
4. SCHEDULED COOLING AND HEATING CAPACITIES REPRESENT THE UNIT'S PERFORMANCE AT THE OPERATING CONDITIONS.

DIFFUSER, REGISTER & GRILLE SCHEDULE

SYMBOL	DESCRIPTION	KRUEGER	METALAIRE	PRICE	TITUS	TUTTLE & BAILEY
CD	MODULAR CORE SURFACE MOUNT CEILING DIFFUSER FLAT FRAME	1240 FRAME 22	9000-1	SMCD FRAME 1	MCD BORDER TYPE 1	SQD-SF
CDL	MODULAR CORE LAY-IN CEILING DIFFUSER FOR T-BAR CEILING 24x24 PANEL	1240 FRAME 23	9000-IP	SMCD FRAME 3P	MCD BORDER TYPE 3	SQD-LT
CR	CEILING RETURN WITH " EGG CRATE CORE SURFACE MOUNT	EGC-5	CC5D	80	MODEL 50 F BORDER TYPE 1	CRE500-SF
CRL	CEILING RETURN WITH " EGG CRATE CORE IN 24x24 PANEL FOR T-BAR CEILING	EGC-5TB	CC5D-TBD	80 - TBP	MODEL 50 F BORDER TYPE 3	CRE500-LT
S *	DOUBLE DEFLECTION SUPPLY GRILLE WITH VERTICAL FRONT BARS, 2" SPACING	880 V	V 4004 S	920L	300 RS	T54
R & E *	RETURN OR EXHAUST GRILLE WITH 35° OR 45° HORIZONTAL BARS.	S 80 H	SRH	530L	350 RL	T70D
DL	HEAVY DUTY DUCT MOUNTED DRUM LOUVER WITH ROTATING DRUM	-	-	-	US-DL	-
RH & EH	HEAVY DUTY RETURN OR EXHAUST GRILLE WITH 35° OR 45° HORIZONTAL BARS	S 480 H	HDRH	-	33 RL	T115H-40
LDS2 & LDR2	ALUMINUM LINEAR SLOT DIFFUSER WITH 2-3/4" SLOTS & FIELD FABRICATED PLENUM	-	-	-	ML-38	6000
LDS3	ALUMINUM LINEAR SLOT DIFFUSER, 3 SLOTS, 1" WIDTH, 5' LENGTH, MANUFACTURER'S INSULATED PLENUM, & MANUAL AIR DAMPER ACCESSORY	DFL	-	SDS100	ML-39	6000
LDR3	ALUMINUM LINEAR SLOT RETURN 3 SLOTS, 1" WIDTH, 5' LENGTH, MANUFACTURER'S INSULATED PLENUM, & MANUAL AIR DAMPER ACCESSORY	DFL	-	SDR100	MLR-39	6000
LDS **	ALUMINUM LINEAR SLOT DIFFUSER, 3 SLOTS, 3/4" WIDTH, 5' LENGTH, MANUFACTURER'S INSULATED PLENUM, & MANUAL AIR DAMPER ACCESSORY	DFL	-	SDS75 Z-Z END BORDER BORDER TYPE AMT	FL-20	6000
LDR **	ALUMINUM LINEAR SLOT RETURN 3 SLOTS, 3/4" WIDTH, 5' LENGTH, MANUFACTURER'S INSULATED PLENUM, & MANUAL AIR DAMPER ACCESSORY	DFL	-	SDR75 Z-Z END BORDER BORDER TYPE AMT	FL-20	6000

NOTES:

1. ALL SYMBOLS NOTED MAY NOT BE USED. REFER TO PLANS FOR SIZE AND QUANTITY.
2. ALL SUPPLY AIR DIFFUSERS ARE 4 WAY BLOW UNLESS SHOWN OTHERWISE.
3. FURNISH ALL PRODUCTS OF A SINGLE MANUFACTURER.
   - * ALUMINUM REGISTERS FOR SHOWERS AND DAMP AREAS
   - ** PER PXY 68798 FOR 6" MODULE AND 3/4" DROP
4. COORDINATE DIFFUSER TYPE WITH REFLECTED CEILING PLAN.
5. OPPOSED BLADE DAMPERS ARE NOT REQUIRED AT DIFFUSERS, REGISTERS OR GRILLES.
6. PROVIDE MANUAL AIR DAMPERS AT EACH BRANCH DUCT TO A SINGLE DIFFUSER, REGISTER OR GRILLE.

VRF FAN COIL UNIT SCHEDULE

EQUIPMENT TAG						AIR FLOW	MIN OA	ESP [IN	COOLING CAP. [BTUH]		HEATING	REFRIGERANT LINES		ELECTRICAL DATA			OPERATING	MOUNTING	CONTROL	
TYPE	UNIT #	MANUFACTURER	MODEL	TYPE	TONS	[CFM]	[CFM]	WG]	SENSIBLE	TOTAL	CAP.[BTUH]	RL [IN]	RS [IN]	VOLT/PH	MCA	MOP	WEIGHT [LBS]	DETAIL	DIAGRAM	NOTES
FCU	A-1	DAIKIN	FXMQ15PBVJU	DUCTED	1.25	325	85	0.4	10,568	12,225	16,514	1/4	1/2	208/1	1.5	15	95	3/M500	1/M601	1 THRU 4
FCU	A-2	DAIKIN	FXMQ07PBVJU	DUCTED	0.6	150	75	0.2	5,643	6,104	8,496	1/4	1/2	208/1	0.6	15	65	3/M500	1/M601	1 THRU 4
FCU	A-3	DAIKIN	FXEQ07PVJU	CEILING CASSETTE	0.6	125	15	0.0	4,892	6,095	8,496	1/4	1/2	208/1	0.3	15	45	2/M500	1/M601	1 THRU 4
FCU	A-4	DAIKIN	FXMQ18PBVJU	DUCTED	1.5	300	175	0.4	13,651	14,663	19,994	1/4	1/2	208/1	1.6	15	95	3/M500	1/M601	1 THRU 4
FCU	A-5	DAIKIN	FXEQ07PVJU	CEILING CASSETTE	0.6	100	15	0.0	4,892	6,095	8,494	1/4	1/2	208/1	0.3	15	45	2/M500	1/M601	1 THRU 4
FCU	A-6	DAIKIN	FXMQ36PBVJU	DUCTED	3	650	400	0.4	24,740	29,351	39,989	3/8	5/8	208/1	2.9	15	125	3/M500	1/M601	1 THRU 4
FCU	A-7	DAIKIN	FXEQ07PVJU	CEILING CASSETTE	0.6	150	30	0.0	4,892	6,095	8,496	1/4	1/2	208/1	0.3	15	45	2/M500	1/M601	1 THRU 4
FCU	A-8	DAIKIN	FXEQ07PVJU	CEILING CASSETTE	0.6	150	30	0.0	4,892	6,095	8,496	1/4	1/2	208/1	0.3	15	45	2/M500	1/M601	1 THRU 4
FCU	A-9	DAIKIN	FXEQ07PVJU	CEILING CASSETTE	0.6	150	60	0.0	4,892	6,095	8,496	1/4	1/2	208/1	0.3	15	45	2/M500	1/M601	1 THRU 4
FCU	A-10	DAIKIN	FXMQ07PBVJU	DUCTED	0.6	175	30	0.2	5,643	6,104	8,496	1/4	1/2	208/1	0.6	15	65	3/M500	1/M601	1 THRU 4
FCU	A-11	DAIKIN	FXEQ07PVJU	CEILING CASSETTE	0.6	175	15	0.0	4,892	6,095	8,496	1/4	1/2	208/1	0.3	15	45	2/M500	1/M601	1 THRU 4
FCU	A-12	DAIKIN	FXMQ12PBVJU	DUCTED	1	325	65	0.2	8,375	9,795	13,512	1/4	1/2	208/1	1.4	15	75	3/M500	1/M601	1 THRU 4
FCU	C-1	DAIKIN	FXMQ24PBVJU	DUCTED	2	550	250	0.4	16,331	19,607	26,989	3/8	5/8	208/1	1.8	15	100	3/M500	1/M601	1 THRU 4
FCU	C-2	DAIKIN	FXMQ30PBVJU	DUCTED	2.5	750	300	0.4	20,546	24,458	33,984	3/8	5/8	208/1	2.8	15	125	3/M500	1/M601	1 THRU 4
FCU	C-3	DAIKIN	FXMQ30PBVJU	DUCTED	2.5	750	750	0.4	20,546	24,458	33,984	3/8	5/8	208/1	2.8	15	125	3/M500	1/M601	1 THRU 4
FCU	E-1	DAIKIN	FXMQ30PBVJU	DUCTED	2.5	650	450	0.4	20,546	24,458	33,984	3/8	5/8	208/1	2.8	15	125	3/M500	1/M601	1 THRU 4
FCU	E-2	DAIKIN	FXMQ30PBVJU	DUCTED	2.5	650	450	0.4	20,546	24,458	33,984	3/8	5/8	208/1	2.8	15	125	3/M500	1/M601	1 THRU 4
FCU	E-3	DAIKIN	FXMQ36PBVJU	DUCTED	3	700	450	0.4	24,740	29,351	39,989	3/8	5/8	208/1	2.9	15	125	3/M500	1/M601	1 THRU 4
FCU	E-4	DAIKIN	FXEQ07PVJU	CEILING CASSETTE	0.6	100	15	0.0	4,892	6,095	8,496	1/4	1/2	208/1	0.3	15	45	2/M500	1/M601	1 THRU 4
FCU	E-5	DAIKIN	FXEQ07PVJU	CEILING CASSETTE	0.6	100	15	0.0	4,892	6,095	8,496	1/4	1/2	208/1	0.3	15	45	2/M500	1/M601	1 THRU 4
FCU	E-6	DAIKIN	FXEQ07PVJU	CEILING CASSETTE	0.6	125	15	0.0	4,892	6,095	8,496	1/4	1/2	208/1	0.3	15	45	2/M500	1/M601	1 THRU 4
FCU	E-7	DAIKIN	FXMQ48PBVJU	DUCTED	4	950	460	0.4	30,992	39,129	53,978	3/8	5/8	208/1	3.4	15	125	3/M500	1/M601	1 THRU 4
FCU	E-8	DAIKIN	FXMQ15PBVJU	DUCTED	1.25	300	180	0.4	10,568	12,225	16,514	1/4	1/2	208/1	1.5	15	95	3/M500	1/M601	1 THRU 4
FCU	E-9	DAIKIN	FXMQ12PBVJU	DUCTED	1	550	550	0.2	8,375	9,795	13,512	1/4	1/2	208/1	1.4	15	75	3/M500	1/M601	1 THRU 4
FCU	E-10	DAIKIN	FXMQ12PBVJU	DUCTED	1	250	100	0.2	8,375	9,795	13,512	1/4	1/2	208/1	1.4	15	75	3/M500	1/M601	1 THRU 4
FCU	E-11	DAIKIN	FXEQ07PVJU	CEILING CASSETTE	0.6	150	30	0.0	4,892	6,095	8,496	1/4	1/2	208/1	0.3	15	45	2/M500	1/M601	1 THRU 4
FCU	E-12	DAIKIN	FXEQ12PVJU	CEILING CASSETTE	1	125	15	0.0	7,477	9,787	13,512	1/4	1/2	208/1	0.4	15	45	2/M500	1/M601	1 THRU 4
FCU	HM-1	DAIKIN	FXMQ12PBVJU	DUCTED	1	350	75	0.2	8,375	9,795	13,512	1/4	1/2	208/1	1.4	15	75	3/M500	1/M601	1 THRU 4
FCU	HM-2	DAIKIN	FXMQ09PBVJU	DUCTED	0.75	250	75	0.2	6,787	7,749	10,509	1/4	1/2	208/1	0.6	15	65	3/M500	1/M601	1 THRU 4
FCU	HM-3	DAIKIN	FXMQ12PBVJU	DUCTED	1	350	75	0.2	8,375	9,795	13,512	1/4	1/2	208/1	1.4	15	75	3/M500	1/M601	1 THRU 4
FCU	HM-4	DAIKIN	FXMQ15PBVJU	DUCTED	1.25	575	575	0.4	10,568	12,225	16,514	1/4	1/2	208/1	1.5	15	95	3/M500	1/M601	1 THRU 4
FCU	HM-5	DAIKIN	FXMQ07PBVJU	DUCTED	0.6	250	80	0.2	5,643	6,104	8,496	1/4	1/2	208/1	0.6	15	65	3/M500	1/M601	1 THRU 4
FCU	HM-6	DAIKIN	FXMQ07PBVJU	DUCTED	0.6	250	30	0.2	5,643	6,104	8,496	1/4	1/2	208/1	0.6	15	65	3/M500	1/M601	1 THRU 4
FCU	HW-1	DAIKIN	FXMQ12PBVJU	DUCTED	1	350	75	0.2	8,375	9,795	13,512	1/4	1/2	208/1	1.4	15	75	3/M500	1/M601	1 THRU 4
FCU	HW-2	DAIKIN	FXMQ09PBVJU	DUCTED	0.75	250	75	0.2	6,787	7,749	10,509	1/4	1/2	230/1	0.6	15	65	3/M500	1/M601	1 THRU 4
FCU	HW-3	DAIKIN	FXMQ12PBVJU	DUCTED	1	350	75	0.2	8,375	9,795	13,512	1/4	1/2	208/1	1.4	15	75	3/M500	1/M601	1 THRU 4
FCU	HW-4	DAIKIN	FXMQ15PBVJU	DUCTED	1.25	475	475	0.4	10,568	12,225	16,514	1/4	1/2	208/1	1.5	15	95	3/M500	1/M601	1 THRU 4
FCU	HW-5	DAIKIN	FXMQ07PBVJU	DUCTED	0.6	250	80	0.2	5,643	6,104	8,496	1/4	1/2	208/1	0.6	15	65	3/M500	1/M601	1 THRU 4
FCU	HW-6	DAIKIN	FXMQ07PBVJU	DUCTED	0.6	250	30	0.2	5,643	6,104	8.496	1/4	1/2	208/1	0.6	15	65	3/M500	1/M601	1 THRU 4
FCU	MP-1	DAIKIN	FXMQ07PBVJU	DUCTED	0.6	200	125	0.2	5,643	6,104	8,496	1/4	1/2	208/1	0.6	15	65	5/M502	1/M601	1 THRU 4
FCU	MP-2	DAIKIN	FXMQ18PBVJU	DUCTED	1.5	475	475	0.4	13,651	14,663	19,994	1/4	1/2	208/1	1.6	15	95	5/M502	1/M601	1 THRU 4
FCU	MP-3	DAIKIN	FXMQ18PBVJU	DUCTED	1.5	575	575	0.4	13,651	14,663	19,994	1/4	1/2	208/1	1.6	15	95	5/M502	1/M601	1 THRU 4
FCU	MP-7	DAIKIN	FXEQ07TVJU	CEILING CASSETTE	0.6	100	15	0.0	4,892	6,095	8,496	1/4	1/2	208/1	0.3	15	45	2/M500	1/M601	1 THRU 4
FCU	R-1	DAIKIN	FXMQ48PBVJU	DUCTED	4	1175	225	0.4	30,992	39,129	53,978	3/8	5/8	208/1	3.4	15	125	3/M500	1/M601	1 THRU 4
FCU	R-2	DAIKIN	FXMQ48PBVJU	DUCTED	4	850	575	0.4	30,992	39,129	53,978	3/8	5/8	208/1	3.4	15	125	3/M500	1/M601	1 THRU 4
FCU	R-3	DAIKIN	FXMQ09PBVJU	DUCTED	0.75	300	60	0.2	6,787	7,749	10,509	1/4	1/2	208/1	0.6	15	70	3/M500	1/M601	1 THRU 4
FCU	R-4	DAIKIN	FXZQ12TAVJU	CEILING CASSETTE	1	350	75	0.0	6,910	9,888	13,642	1/4	1/2	208/1	0.4	15	45	2/M500	1/M601	1 THRU 4
FCU	R-5	DAIKIN	FXMQ12PBVJU	DUCTED	1	375	75	0.2	8,375	9,795	13,512	1/4	1/2	208/1	1.4	15	75	3/M500	1/M601	1 THRU 4
FCU	R-6	DAIKIN	FXMQ24PBVJU	DUCTED	2	500	125	0.4	16,331	19,607	26,989	3/8	5/8	208/1	1.8	15	95	3/M500	1/M601	1 THRU 4
FCU	R-7	DAIKIN	FXMQ18PBVJU	DUCTED	1.5	425	100	0.4	13,651	14,663	19,994	1/4	1/2	208/1	1.6	15	95	3/M500	1/M601	1 THRU 4
FCU	R-8	DAIKIN	FXMQ15PBVJU	DUCTED	1.25	475	75	0.4	10,568	12,225	16,514	1/4	1/2	208/1	1.5	15	95	3/M500	1/M601	1 THRU 4
FCU	W-1	DAIKIN	FXEQ07PVJU	CEILING CASSETTE	0.6	100	15	0.0	4,892	6,095	8,496	1/4	1/2	208/1	0.3	15	45	2/M500	1/M601	1 THRU 4
FCU	W-2	DAIKIN	FXMQ18PBVJU	DUCTED	1.5	350	175	0.4	13,651	14,663	19,994	1/4	1/2	208/1	1.6	15	95	3/M500	1/M601	1 THRU 4
FCU	W-3	DAIKIN	FXMQ12PBVJU	DUCTED	1	300	60	0.2	8,375	9,795	13,512	1/4	1/2	208/1	1.4	15	75	3/M500	1/M601	1 THRU 4
FCU	W-4	DAIKIN	FXMQ07PBVJU	DUCTED	0.6	125	45	0.2	5,643	6,104	8,496	1/4	1/2	208/1	0.6	15	65	3/M500	1/M601	1 THRU 4
FCU	W-5	DAIKIN	FXMQ24PBVJU	DUCTED	2	600	120	0.4	16,331	19,607	26,989	3/8	5/8	208/1	1.8	15	95	3/M500	1/M601	1 THRU 4

NOTES:

1. PROVIDE UNITS WITH R-410A REFRIGERANT.
2. FAN COIL UNIT PROVIDED WITH INTEGRAL CONDENSATE PUMP.
3. SCHEDULED COOLING AND HEATING CAPACITIES REPRESENT THE UNIT'S PERFORMANCE AT THE OPERATING CONDITIONS.
4. PROVIDE UNIT WITH MERV 13 FILTER.

ENERGY RECOVERY VENTILATOR SCHEDULE

EQUIPMENT TAG				SUPPLY FAN				RELIEF/EXHAUST FAN				ELECTRICAL DATA			EFFECTIVENESS		OPER. WT.	MOUNTING	CONTROL	
TYPE	UNIT #	MANUFACTURER	MODEL	CFM	BHP	HP	E.S.P. [IN. W.G.]	CFM	BHP	HP	E.S.P. [IN. W.G.]	VOLT/PH	MCA	MOP	SUMMER [%]	WINTER [%]	[LBS]	DETAIL	DIAGRAM	Comments
ERV	C-1	GREENHECK	ERV-20-15H	1,300	0.54	3/4	0.5	1,350	0.60	3/4	0.5	208/3	8.5	15	91.4	75.3	835	3/M500	6/M601	1 THRU 4
ERV	E-1	GREENHECK	ERV-20-15L	1,055	0.42	1/2	0.5	1,055	0.37	1/2	0.5	460/3	2.8	15	89.2	80.9	780	3/M500	6/M601	1 THRU 3
ERV	E-2	GREENHECK	ERV-20-15L	1,080	0.44	1/2	0.5	1,020	0.34	1/2	0.5	460/3	2.8	15	90.8	82.0	780	3/M500	6/M601	1 THRU 3
ERV	E-3	GREENHECK	ERV-10-20L-VG	595	--	1/2	0.5	550	-	1/2	0.5	208/1	8.9	15	85.8	80.7	310	3/M500	6/M601	1 THRU 3
ERV	HM-1	GREENHECK	ERV-20-15L	910	0.33	1/3	0.5	850	0.26	1/3	0.5	208/3	4.6	15	91.1	83.7	915	3/M500	6/M601	1 THRU 4
ERV	HW-1	GREENHECK	ERV-10-20L-VG	810	--	1/2	0.5	750	-	1/2	0.5	208/1	8.9	15	82.3	76.7	310	3/M500	6/M601	1 THRU 3
ERV	MP-1	GREENHECK	ERV-20-15L	1,175	0.53	3/4	0.5	1,225	0.52	3/4	0.5	460/3	4.0	15	91.2	79.8	775	5/M502	6/M601	1 THRU 3

NOTES:

1. PROVIDE UNITS WITH MANUFACTURER'S LOW LEAKAGE, MOTORIZED OUTDOOR AIR DAMPER.
2. PROVIDE UNITS WITH 2" MERV 12 OUTDOOR AIR FILTERS.
3. PROVIDE UNITS WITH 2" MERV 8 EXHAUST AIR FILTERS.
4. INSTALL SMOKE DUCT DETECTOR IN SUPPLY AIR DUCT MAIN FOR AUTOMATIC SHUTDOWN OF HVAC SYSTEM UPON SENSING SMOKE. PROVIDED, POWERED, AND INTERLOCKED WITH FIRE ALARM SYSTEM BY DIV. 26, INSTALLED AND CONNECTED TO ERV BY DIV. 23.

INTAKE/RELIEF HOOD SCHEDULE

EQUIPMENT TAG										
TYPE	UNIT #	MANUFACTURER	MODEL	LOCATION	SYSTEM AND/ OR SERVICE	TYPE	MOUNTING DETAIL	CONTROL DIAGRAM	OPERATING WEIGHT	NOTES
GV	A-1	COOK	12 PR	ROOF	OA	MOTORIZED INTAKE	12/M500	2/M601	60	1 THRU 2
GV	A-2	COOK	12 PR	ROOF	RA	MOTORIZED RELIEF	12/M500	2/M601	60	1 THRU 2
GV	A-3	COOK	8 PR	ROOF	EA	MOTORIZED RELIEF	12/M500	2/M601	45	1 THRU 2
GV	C-1	COOK	8 PR	ROOF	EA	GRAVITY RELIEF	12/M500	NA	45	1 THRU 2
GV	C-2	COOK	8 PR	ROOF	EA	GRAVITY RELIEF	12/M500	NA	45	1 THRU 2
GV	C-3	COOK	8 PR	ROOF	OA	GRAVITY INTAKE	12/M500	NA	45	1 THRU 2
GV	C-4	COOK	8 PR	ROOF	OA	GRAVITY INTAKE	12/M500	NA	45	1 THRU 2
GV	HM-1	COOK	8 PR	ROOF	EA	GRAVITY RELIEF	12/M500	NA	45	1 THRU 2
GV	HW-1	COOK	8 PR	ROOF	EA	GRAVITY RELIEF	12/M500	NA	45	1 THRU 2
GV	R-1	COOK	20 PR	ROOF	OA	GRAVITY INTAKE	12/M500	NA	140	1 THRU 2
GV	R-2	COOK	20 PR	ROOF	EA	MOTORIZED RELIEF	12/M500	2/M601	140	1 THRU 2

NOTES:

1. PROVIDE WITH COUNTER-BALANCED BACKDRAFT DAMPER AND ALUMINUM GALVANIZED BIRD SCREEN.
2. PROVIDE WITH MANUFACTURER'S 9.5" ROOF CURB.

IDENTIFICATION STAMP
DIV. OF THE STATE ARCHITECT
APP: 02-118630 INC:
REVIEWED FOR
SS ☐ FLS ☐ ACS ☑
DATE: 04/13/2021

OFFICE OF THE STATE FIRE MARSHAL
APPROVED FIRE AND PANIC ONLY
Approval of this plan does not authorize or approve any omission or deviation from applicable regulations. Final approval is subject to field inspection. One set of approved plans shall be available on the project site at all times.
PERMIT NO. 20-N-2332-CP
REVIEWED BY: LEO CATAYLO, OSFM
DATE: 4/ /2021

GENERAL SERVICES
Department of General Services
State of California
Real Estate Services Division
Project Management & Development Branch
707 Third Street, Suite 4-105
West Sacramento, California 95605

NICHOLS MELBURG & ROSSETTO ARCHITECTS + ENGINEERS
300 Knollcrest Drive
Redding, CA. 96002
(530) 222-3300 (530) 222-3538 FAX
http://www.nmrdesign.com

Copyright © 2019
All ideas, designs, arrangements and plans indicated or represented by this drawing are owned by, and the property of, NICHOLS, MELBURG and ROSSETTO and were created, evolved and developed for use on, and in conjunction with, the specified project. None of such ideas, designs, arrangements or plans shall be used by, or disclosed to any person, firm or corporation for any purpose whatsoever without the written permission of NICHOLS, MELBURG and ROSSETTO.

LICENSE STAMPS

REGISTERED PROFESSIONAL ENGINEER — M 33498 — MECHANICAL — EXPIRES 9/2022 — STATE OF CALIFORNIA
DATE SIGNED: 10-20-20

CONSULTANT

CAPITAL ENGINEERING CONSULTANTS, INC.
RANCHO CORDOVA, CALIFORNIA
JD - HC/JH — PM - DESIGN TEAM
181205.00 — PROJECT NO.

DRAWING STATUS
CONSTRUCTION DOCUMENTS

ISSUE

No.	Date	Description
1	10/22/2020	INITIAL PLAN REVIEW
2	01/22/2021	AGENCY RESUBMITTAL
3	03/22/2021	AGENCY RESUBMITTAL

If drawing is not 30" x 42" it is a reduced print

PROJECT
RESIDENTIAL CENTER, UKIAH: REPLACEMENT OF EXISTING RESIDENTIAL CENTER
440 EAST HILL ROAD
WILLITS, CALIFORNIA 95490
MENDOCINO COUNTY
CALIFORNIA CONSERVATION CORPS

Supervisor	Designed	Drawn
		Author

DSA Application No.
02-118630

SHEET TITLE
HVAC SCHEDULES

DGS Project Number: 0000000000001826
NMR Project Number: 18-6456

Sheet Scale: 12" = 1'-0"

Sheet Number: M002

ISSUE DATE
July 9, 2021

Plot Date: 3/18/2021 1:18:01 PM
File Name: L:\Revit Local Files\CECI_DGS CCC Willits_Schedules_MP18_Central_jduvall\KTH47.rvt

ROOFTOP AC UNIT SCHEDULE

EQUIPMENT TAG TYPE	EQUIPMENT TAG UNIT #	MANUFACTURER	MODEL	MIN. O.A. [CFM] UPPER	MIN. O.A. [CFM] LOWER	SUPPLY FAN CFM	SUPPLY FAN ESP [IN. W.G.]	SUPPLY FAN TSP [IN. W.G.]	SUPPLY FAN BHP	SUPPLY FAN HP	SUPPLY FAN FLA	EXHAUST FAN CFM	EXHAUST FAN ESP [IN. W.G.]	EXHAUST FAN BHP	EXHAUST FAN HP	EXHAUST FAN FLA	DX COOLING EDB	DX COOLING EWB	DX COOLING LDB	DX COOLING CAPACITY [BTUH] TOTAL	DX COOLING CAPACITY [BTUH] SENSIBLE	HEAT PUMP CAP. [BTUH]	ENERGY RECOVERY WHEEL MOTOR HP	ENERGY RECOVERY WHEEL MOTOR FLA	SUMMER EFF. TOTAL	SUMMER EFF. SENSIBLE	WINTER EFF. TOTAL	WINTER EFF. SENSIBLE	ELECTRICAL DATA VOLT/PH	MCA	MOP	FLA	COMPRESSOR QTY	COMPRESSOR RLA 1	COMPRESSOR RLA 2	COND FLA	EER [IEER]	COP	FILTER [MERV]	OPER WT [LBS]	MOUNTING DETAIL	CONTROL DIAGRAM	NOTES
RTU	MP-1	DAIKIN	DPS-007	1948	660	2500	1.0	1.9	1.27	2.3	4.6	2500	0.50	0.20	2.3	4.6	81.2	52.5	49.9	81528	81528	80380	0.17	0.9	62.72 %	64.73 %	70.22 %	67.49 %	230/3	34.1	40	31.4	2	10.8	7.8	3.6	12.8 [19.3]	3.62	13	3400	9/M500	1/M603	1 THRU 7

NOTES:

1. UNITS SELECTED AT 95 F DB / 66 F WB SUMMER AMBIENT, 18 F DB WINTER AMBIENT AIR TEMPERATURES. COOLING CAPACITIES SCHEDULED ARE NET SENSIBLE & NET TOTAL CAPACITIES.
2. PROVIDE WITH FIELD FURNISHED, 2" MERV-13 FILTERS.
3. PROVIDE UNIT WITH FACTORY 100% MODULATING POWER EXHAUST ECONOMIZER WITH VFD, DIFFERENTIAL PRESSURE TRANSDUCER, ROOM PRESSURE TUBING, AND DAMPER ACTUATORS. NOTE THAT FACTORY MODULATING POWER EXHAUST ECONOMIZER SHALL BE FACTORY WIRED TO RECEIVE ITS POWER FROM THE AC UNIT, A SEPARATE POWER CONNECTION TO THE MODULATING POWER EXHAUST ECONOMIZER IS NOT REQUIRED. SCHEDULED AC UNIT MCA & MOP INCLUDE MODULATING POWER EXHAUST ECONOMIZER LOAD.
4. LOWER OUTSIDE AIR POSITION INDICATED IS BASED ON 0.15 CFM/SQFT, ALLOWABLE FOR CO2 DEMAND CONTROLLED SYSTEMS AT MINIMUM OCCUPANCY. UPPER OUTSIDE AIR POSITION INDICATED IS BASED ON 15 CFM/OCCUPANT WHEN SPACE IS AT MAXIMUM OCCUPANCY, UNLESS SYSTEM IS IN ECONOMIZER MODE. SEE CONTROLS FOR SEQUENCE OF OPERATION. FOR THESE UNITS WITH CO2 CONTROL, ENTERING AIR TEMPERATURES SCHEDULED REPRESENT CONDITIONS AT UPPER OSA POSITION.
5. PROVIDE UNIT WITH FACTORY INSTALLED VFD ON SUPPLY FAN AND MINIMUM 2-STAGES OF MECHANICAL COOLING CAPACITY.
6. INSTALL DUCT SMOKE DETECTOR IN SUPPLY AIR DUCT FOR AUTOMATIC SHUTDOWN OF HVAC SYSTEM UPON SENSING SMOKE. PROVIDED, POWERED & INTERLOCKED WITH FIRE ALARM SYSTEM BY DIV. 26, INSTALLED & CONNECTED TO AC UNIT BY DIV. 23.
7. PROVIDE WITH MANUFACTURER'S 14" ROOF CURB.

MAKE-UP AIR UNIT SCHEDULE

EQUIPMENT TAG TYPE	EQUIPMENT TAG UNIT #	MANUFACTURER	MODEL	COOLING CAPACITY SENSIBLE [MBH]	COOLING CAPACITY TOTAL [MBH]	ELECTRIC HEATER CAPACITY [KW]	ELECTRIC HEATER FLA	ELECTRIC HEATER MCA	ELECTRIC HEATER MOP	HEAT PUMP CAPACITY [MBH]	SUPPLY FAN CFM	SUPPLY FAN ESP [IN. W.G.]	SUPPLY FAN BHP	SUPPLY FAN HP	SUPPLY FAN FLA	EXHAUST FAN ESP [IN. W.G.]	EXHAUST FAN BHP	EXHAUST FAN HP	EXHAUST FAN FLA	ELECTRICAL DATA VOLT/PH	ELECTRICAL DATA MCA	ELECTRICAL DATA MOP	ELECTRICAL DATA FLA	EER	COP	OPER WT [LBS]	MOUNTING DETAIL	CONTROL DIAGRAM	NOTES
MAU	MP-1	ADDISON	PRRH 420 D6	394.1	467.5	40	48.1	60.1	70	397.4	8,000	1.5	6.62	7.5	7	0.8	3.59	5	6.3	460/3	143.6	150	124.83	12	4.2	7,600	9/M500	1/M604	1 THRU 5

NOTES:

1. UNITS SELECTED AT 95 F DB / 66 F WB SUMMER AMBIENT, 18 F DB WINTER AMBIENT AIR TEMPERATURES. COOLING CAPACITIES SCHEDULED ARE NET SENSIBLE & NET TOTAL CAPACITIES.
2. PROVIDE WITH FIELD FURNISHED, 2" MERV-13 FILTERS.
3. PROVIDE UNIT WITH FACTORY 100% MODULATING POWER EXHAUST ECONOMIZER WITH VFD, DIFFERENTIAL PRESSURE TRANSDUCER, ROOM PRESSURE TUBING, AND DAMPER ACTUATORS. NOTE THAT FACTORY MODULATING POWER EXHAUST ECONOMIZER SHALL BE FACTORY WIRED TO RECEIVE ITS POWER FROM THE AC UNIT, A SEPARATE POWER CONNECTION TO THE MODULATING POWER EXHAUST ECONOMIZER IS NOT REQUIRED. SCHEDULED AC UNIT MCA & MOP INCLUDE MODULATING POWER EXHAUST ECONOMIZER LOAD.
4. PROVIDE UNIT WITH FACTORY INSTALLED VFD ON SUPPLY FAN AND MINIMUM 2-STAGES OF MECHANICAL COOLING CAPACITY.
5. INSTALL DUCT SMOKE DETECTOR IN SUPPLY AIR DUCT FOR AUTOMATIC SHUTDOWN OF HVAC SYSTEM UPON SENSING SMOKE. PROVIDED, POWERED & INTERLOCKED WITH FIRE ALARM SYSTEM BY DIV. 26, INSTALLED & CONNECTED TO AC UNIT BY DIV. 23.

INDOOR AC UNIT SCHEDULE

EQUIPMENT TAG TYPE	EQUIPMENT TAG UNIT #	MANUFACTURER	MODEL	MIN. O.A. [CFM] UPPER	MIN. O.A. [CFM] LOWER	SUPPLY FAN CFM	SUPPLY FAN ESP [IN. W.G.]	SUPPLY FAN TSP [IN. W.G.]	SUPPLY FAN ELECTRICAL DATA BHP	HP	VOLT/PH	LRA	FLA	EXHAUST FAN CFM	EXHAUST FAN ESP [IN. W.G.]	EXHAUST FAN ELECTRICAL DATA BHP	HP	VOLT/PH	LRA	FLA	DX COOLING EDB	DX COOLING EWB	DX COOLING LDB	CAPACITY [BTUH] TOTAL	CAPACITY [BTUH] SENSIBLE	HEAT PUMP CAP. [BTUH]	ENERGY RECOVERY WHEEL MOTOR HP	SUMMER EFF. TOTAL	SUMMER EFF. SENSIBLE	WINTER EFF. TOTAL	WINTER EFF. SENSIBLE	FILTER [MERV]	OPER WT [LBS]	MOUNTING DETAIL	CONTROL DIAGRAM	NOTES
AC	MP-1	DAIKIN	CAH010	2,528	760	3500	1.75	2.67	3.31	5	460/3	47.1	6.6	3500	0.50	2.17	3	460/3	28.2	4.2	80.0	67.0	62.4	95201	67225	186000	0.5	73.17 %	73.63 %	73.56 %	75.16 %	13	3100	3/M502	1/M603	1 THRU 7

NOTES:

1. UNITS SELECTED AT 95 F DB / 66 F WB SUMMER AMBIENT, 18 F DB WINTER AMBIENT AIR TEMPERATURES. COOLING CAPACITIES SCHEDULED ARE NET SENSIBLE & NET TOTAL CAPACITIES.
2. PROVIDE WITH FIELD FURNISHED, 2" MERV-13 FILTERS.
3. PROVIDE UNIT WITH TWO POINTS OF ELECTRICAL CONNECTION. ONE AT THE SUPPLY FAN AND ONE AT THE EXHAUST FAN.
4. LOWER OUTSIDE AIR POSITION INDICATED IS BASED ON 0.15 CFM/SQFT, ALLOWABLE FOR CO2 DEMAND CONTROLLED SYSTEMS AT MINIMUM OCCUPANCY. UPPER OUTSIDE AIR POSITION INDICATED IS BASED ON 15 CFM/OCCUPANT WHEN SPACE IS AT MAXIMUM OCCUPANCY, UNLESS SYSTEM IS IN ECONOMIZER MODE. SEE CONTROLS FOR SEQUENCE OF OPERATION. FOR THESE UNITS WITH CO2 CONTROL, ENTERING AIR TEMPERATURES SCHEDULED REPRESENT CONDITIONS AT UPPER OSA POSITION.
5. PROVIDE UNIT WITH FACTORY INSTALLED VFD ON SUPPLY FAN AND MINIMUM 2-STAGES OF MECHANICAL COOLING CAPACITY.
6. INSTALL DUCT SMOKE DETECTOR IN SUPPLY AIR DUCT FOR AUTOMATIC SHUTDOWN OF HVAC SYSTEM UPON SENSING SMOKE. PROVIDED, POWERED & INTERLOCKED WITH FIRE ALARM SYSTEM BY DIV. 26, INSTALLED & CONNECTED TO AC UNIT BY DIV. 23.
7. UNIT SHALL BE PROVIDED WITH FACTORY-INSTALLED 2" SPRING INTERNALLY ISOLATED FANS.

FAN SCHEDULE

EQUIPMENT TAG TYPE	EQUIPMENT TAG UNIT #	MANUFACTURER	"MFR" MODEL NO.	CFM	SP [IN. W.G.]	RPM	VOLT/PH	HP	BHP [W]	dB	OPER WT. [LBS]	MOUNTING DETAIL	CONTROL DIAGRAM	NOTES
CEF	E-1	COOK	GC-222	75	0.25	1301	115/1	-	[20]	33	20	7/M500	3/M600	1 THRU 3
CEF	E-2	COOK	GC-222	75	0.25	1301	115/1	-	[20]	33	20	7/M500	3/M601	1 THRU 3
CEF	R-1	COOK	GC-146	75	0.20	778	115/1	-	[29]	32	20	7/M500	3/M601	1 THRU 3
CEF	R-2	COOK	GC-146	75	0.20	778	115/1	-	[29]	32	20	7/M500	3/M600	1 THRU 3
EF	A-1	COOK	90SQN17DEC	225	0.25	1144	115/1	1/6	[29]	49	105	6/M500	4/M600	1 THRU 3
EF	A-2	COOK	100SQN17DEC	225	0.40	1229	115/1	1/4	[38]	50	130	6/M500	3/M600	1 THRU 4
EF	C-1	COOK	90SQN17DEC	300	0.25	1265	115/1	1/6	[45]	53	105	6/M500	4/M600	1 THRU 3
EF	C-2	COOK	90SQN17DEC	300	0.25	1265	115/1	1/6	[45]	53	105	6/M500	4/M600	1 THRU 3
EF	E-1	COOK	100SQN17DEC	350	0.30	1138	115/1	1/4	[40]	47	130	6/M500	4/M600	1 THRU 3, 6, 8
EF	HM-1	COOK	90SQN17ECD	350	0.25	1357	115/1	1/6	[56]	55	105	6/M500	4/M600	1 THRU 3
EF	HM-2	COOK	90SQN17ECD	200	0.20	1021	115/1	1/6	[21]	46	105	6/M500	4/M600	1 THRU 3
EF	HM-3	COOK	70SQN17DEC	50	0.15	1050	115/1	1/6	[6]	43	80	6/M500	3/M601	1 THRU 3
EF	HW-1	COOK	90SQN17DEC	350	0.25	1357	115/1	1/6	[56]	55	105	6/M500	4/M600	1 THRU 3
EF	HW-2	COOK	90SQN17DEC	200	0.20	1021	115/1	1/6	[21]	57	105	6/M500	4/M600	1 THRU 3
EF	HW-3	COOK	70SQN17DEC	50	0.15	1050	115/1	1/6	[6]	43	80	6/M500	3/M601	1 THRU 3
EF	MP-1	COOK	120SQN17DEC	750	0.25	991	115/1	1/2	[71]	51	85	6/M500	4/M600	1 THRU 3
EF	MP-2	COOK	100SQN17DEC	375	0.25	1085	115/1	1/4	[37]	46	130	6/M500	4/M600	1 THRU 3
EF	MP-3	COOK	90SQN17DEC	150	0.25	1059	115/1	1/6	[18]	46	105	6/M500	3/M600	1 THRU 3
EF	MP-4	COOK	150RH17DEC	600	0.50	1027	115/1	1/2	[96]	50	120	12/M500	2/M600	1 THRU 5
EF	R-1	COOK	90SQN17DEC	325	0.30	1379	115/1	1/6	[58]	54	105	6/M500	4/M600	1 THRU 3
EF	R-2	COOK	100SQN17DEC	400	0.40	1311	115/1	1/4	[57]	51	130	6/M500	3/M600	1 THRU 3
EF	R-3	ENERVEX	BEF355x	1760	1.00	1950	115/1	1.1	0.74	77	125	6/M500	4/M601	2, 8
EF	W-1	COOK	90SQN17DEC	175	0.25	1086	115/1	1/6	[21]	47	105	6/M500	4/M600	1 THRU 3
EF	W-2	COOK	135SQN17DEC	1400	0.75	1405	115/1	3/4	[330]	60	115	6/M500	4/M600	1 THRU 3
EF	W-3	COOK	100SQN17DEC	325	0.40	1267	115/1	1/4	[49]	50	130	6/M500	4/M600	1 THRU 3
EF	W-4	COOK	120SQN17DEC	925	0.60	1388	115/1	1/2	[176]	58	85	6/M500	4/M600	1 THRU 3
EF	W-5	COOK	100SQN17DEC	450	0.40	1351	115/1	1/4	[64]	51	130	6/M500	4/M600	1 THRU 3
EF	W-6	COOK	90SQN17DEC	225	0.25	1144	115/1	1/6	[29]	49	105	6/M500	3/M600	1 THRU 3
EF	W-7	COOK	90SQN17DEC	150	0.25	1059	115/1	1/6	[18]	46	105	6/M500	4/M600	1 THRU 3
EF	W-8	COOK	90SQN17DEC	150	0.25	1059	115/1	1/6	[18]	46	105	6/M500	4/M600	1 THRU 3
EF	W-9	COOK	90SQN17DEC	150	0.25	1059	115/1	1/6	[18]	46	105	6/M500	4/M600	1 THRU 3
EF	W-10	COOK	70SQN17DEC	75	0.25	1394	115/1	1/6	[15]	47	80	6/M500	4/M600	1 THRU 3
EF	W-11	COOK	70SQN17DEC	75	0.25	1394	115/1	1/6	[15]	47	80	6/M500	4/M600	1 THRU 3
EF	W-12	COOK	90SQN17DEC	150	0.25	1059	115/1	1/6	[18]	46	105	6/M500	4/M600	1 THRU 3
EF	W-13	COOK	90SQN17DEC	150	0.25	1059	115/1	1/6	[18]	46	105	6/M500	4/M600	1 THRU 3
EF	W-14	COOK	90SQN17DEC	150	0.25	1059	115/1	1/6	[18]	46	105	6/M500	4/M600	1 THRU 3
KEF	MP-1	COOK	270VH11D	7440	1.00	1000	460/3	5	2.53	74	375	13/M500	1/M604	1, 6, 7
RF	A-1	COOK	120SQN17DEC	720	0.30	1021	115/1	1/2	[76]	52	85	6/M500	3/M600	1 THRU 4
RF	R-1	COOK	120SQN17DEC	700	0.30	1009	115/1	1/2	[74]	52	85	6/M500	3/M600	1 THRU 3
SF	A-1	COOK	120SQN17DEC	995	0.50	1359	115/1	1/2	[169]	58	85	6/M500	3/M600	1 THRU 4
SF	R-1	COOK	135SQN17DEC	1310	0.50	1229	115/1	3/4	[224]	58	115	6/M500	3/M600	1 THRU 3
SF	W-1	COOK	100SQN17DEC	415	0.40	1322	115/1	1/4	[59]	51	130	6/M500	3/M600	1 THRU 3

NOTES:

1. PROVIDE WITH MANUFACTURER'S 12" ROOF CURB.
2. PROVIDE WITH MANUFACTURER'S BACKDRAFT DAMPER ACCESSORY.
3. PROVIDE MANUFACTURER'S INLET SCREEN.
4. CONTROLLED BY DISHWASHER SWITCH WITH COMMON RELAY.
5. INTERLOCK WITH DISHWASHER OPERATION.
6. UL-762 LISTED FOR REMOVAL OF SMOKE AND GREASE-LADEN EXHAUST.
7. CONTROLLED BY HOOD EXHAUST DEMAND VENTILATION SYSTEM. SEE FOOD SERVICE PLANS FOR CONTROL DIAGRAM AND PANEL LOCATION.
8. PROVIDE WITH MEC 24 MODULATING EXHAUST CONTROL, ECM MOTOR, MODULATION EXHAUST FAN CONTROLLER(S) FOR 8 DRYERS WITH XTP & PRESSURE SENSOR DUCT PROBE AND ADAPTORS. ADD ON RELAY BOARDS AS REQUIRED. PROVIDE WITH LINT TRAP.

AIR CURTAIN SCHEDULE

EQUIPMENT TAG TYPE	EQUIPMENT TAG UNIT NO.	MANUFAC TURER	MODEL	OPENING WIDTH	CFM	VOLT/PH	MOTOR(S) @ HP	AMP DRAW	BREAKER RATING [AMPS]	OPERATIN G WEIGHT [LBS]	NOTES
ACT	MP-1	BERNER	SHD07-1036A	36	1846	120/1	1 @ 3/4	7.5	15	60	1, 2, 3
ACT	MP-2	BERNER	SHD7-1036A	36	1846	120/1	1 @ 3/4	7.5	15	60	1, 2, 3
ACT	MP-3	BERNER	SHD07-2096A	99	3764	120/1	2 @ 3/4	15	20	120	1, 2, 3

NOTES:

1. PROVIDE WITH MANUFACTURER'S WALL MOUNTING PLATE. INSTALL ABOVE DOOR PER MANUFACTURER'S INSTALLATION REQUIREMENTS.
2. PROVIDE UNIT WITH BLACK ALUMINUM EXTERIOR COVER.
3. PROVIDE WITH MANUFACTURER'S "BASIC" CONTROL PACKAGE.

CONDENSING UNIT SCHEDULE

EQUIPMENT TAG TYPE	EQUIPMENT TAG UNIT #	MANUFACTURER	MODEL	COOLING CAP. [BTUH]	HEATING CAP. [BTUH]	ELECTRICAL DATA VOLT/PH	ELECTRICAL DATA MCA	ELECTRICAL DATA MOP	ELECTRICAL DATA RLA	OPER. WT. [LBS]	MOUNTING DETAIL	CONTROL DIAGRAM	NOTES
CU	MP-1A	DAIKIN	RXLQ72TAYDA	73,360	89,742	460/3	28.1	35	9.4	1325	2/M501	1/M603	1
CU	MP-1B	DAIKIN	RXLQ72TAYDA	73,360	89,742	460/3	28.1	35	9.4	1325	2/M501	1/M603	1

NOTES:

1. PIPE CONDENSING UNITS TO INDOOR AC UNIT AC-MP-1 PER PIPING DIAGRAM 9/M400.

SPLIT SYSTEM OUTDOOR UNIT SCHEDULE

EQUIPMENT TAG TYPE	EQUIPMENT TAG UNIT #	MANUFACTURER	MODEL	COOLING CAPACITY [BTUH]	HEATING CAPACITY [BTUH]	REFRIG. LINE SIZE RL [IN]	REFRIG. LINE SIZE RS [IN]	ELECTRICAL DATA PHASE	VOLT	MCA	MOCP	FAN FLA	SEER	OPER. WT. [LBS]	MOUNTING DETAIL	CONTROL DIAGRAM	NOTES
SCU	A-1	DAIKIN	RK24NMVJU	21200	-	1/4	5/8	1	208	18.3	20	0.38	18	130	5/M500	2/M602	1
SCU	E-1	DAIKIN	RK24NMVJU	21200	-	1/4	5/8	1	208	18.3	20	0.38	18	130	5/M500	2/M602	1
SCU	MP-1	DAIKIN	RXB12AXVJU	11000	11300	1/4	3/8	1	208	7.95	15	0.19	17	70	4/M502	1/M602	1
SCU	W-1	DAIKIN	RK24NMVJU	21200	-	1/4	5/8	1	208	18.3	20	0.38	18	130	5/M500	2/M602	1

NOTES:

1. INSTALL MANUFACTURER'S REFRIGERANT LINESET IN STRICT ACCORDANCE WITH MANUFACTURER'S INSTRUCTIONS. PROVIDE ADDITIONAL REFRIGERANT PIPING WHERE REQUIRED.

SPLIT SYSTEM INDOOR UNIT SCHEDULE

EQUIPMENT TAG TYPE	EQUIPMENT TAG UNIT #	MANUFACTURER	MODEL	LOCATION	TYPE	COOLING CAPACITY [BTUH]	HEATING CAPACITY [BTUH]	FILTER [MERV RATING]	MOUNTING DETAIL	CONTROL DIAGRAM	OPERATING WEIGHT	NOTES
SAC	A-1	DAIKIN	FTK24NMVJU	A102 ELEC	WALL MOUNTED	21,200	-	13	8/M500	2/M602	35	1 THRU 3
SAC	E-1	DAIKIN	FTK24NMVJU	E117 DATA/ELEC	WALL MOUNTED	21,200	-	13	8/M500	2/M602	35	1 THRU 3
SAC	MP-1	DAIKIN	FTX12AXVJU	M126 DRY STORAGE	WALL MOUNTED	11,000	11,300	13	8/M500	2/M602	35	1 THRU 3
SAC	W-1	DAIKIN	FTK24NMVJU	W107 ELEC/DATA	WALL MOUNTED	21,200	-	13	8/M500	2/M602	35	1 THRU 3

NOTES:

1. INDOOR UNIT INCLUDES INLINE INTERNAL CONDENSATE DRAIN PUMP.
2. INSTALL MANUFACTURER'S REFRIGERANT LINESET IN STRICT ACCORDANCE WITH MANUFACTURER'S INSTRUCTIONS. PROVIDE ADDITIONAL REFRIGERANT PIPING WHERE REQUIRED.
3. INDOOR UNIT POWERED FROM OUTDOOR UNIT. CONTRACTOR SHALL PROVIDE POWER AND CONTROL WIRING BETWEEN INDOOR AND OUTDOOR UNIT.

ELECTRIC UNIT HEATER SCHEDULE

EQUIPMENT TAG TYPE	EQUIPMENT TAG UNIT #	LOCATION	MANUFACTURER	MODEL	CFM	CAPACITY [KW]	ELECTRICAL DATA VOLT	PHASE	HP	MCA	MOP	OPER. WT. [LBS]	CONTROL DIAGRAM	NOTES
EUH	A-1	A120 F.S.	REZNOR	UHEC-031A	400	3.3	208	1	1/125	15.9	20	30	5/M601	1
EUH	C-1	C113 F.S. / MECH	REZNOR	UHEC-031A	400	3.3	208	1	1/125	15.9	20	30	5/M601	1
EUH	E-1	E120 F.S. / MECH	REZNOR	UHEC-031A	400	3.3	208	1	1/125	15.9	20	30	5/M601	1
EUH	HM-1	HM109 MECH	REZNOR	UHEC-031A	400	3.3	208	1	1/125	15.9	20	30	5/M601	1
EUH	HW-1	HW109 F.S. / MECH	REZNOR	UHEC-031A	400	3.3	208	1	1/125	15.9	20	30	5/M601	1
EUH	MP-1	M117 MECH	REZNOR	UHEC-031A	400	3.3	208	1	1/125	15.9	20	30	5/M601	1
EUH	R-1	R112 F.S.	REZNOR	UHEC-031A	400	3.3	208	1	1/125	15.9	20	30	5/M601	1
EUH	W-1	W128 F.C. RISER	REZNOR	UHEC-031A	400	3.3	208	1	1/125	15.9	20	30	5/M601	1

NOTES:

1. PROVIDE WITH MANUFACTURER'S WALL MOUNTING BRACKETS FOR HORIZONTAL DISCHARGE AIR. INSTALL AS HIGH ON WALL AS POSSIBLE, WHILE IN ACCORDANCE WITH MANUFACTURER'S INSTALLATION REQUIREMENTS.

Plot Date: 3/19/2021 1:16:08 PM
File Name: L:\Revit Local Files\CECI_DGS CCC Willits_Schedules_MP18_Central_jduvalKTH47.rvt

IDENTIFICATION STAMP
DIV. OF THE STATE ARCHITECT
APP: 02-118630 INC:
REVIEWED FOR
SS ☐ FLS ☐ ACS ☑
DATE: 04/13/2021

OFFICE OF THE STATE FIRE MARSHAL
APPROVED FIRE AND PANIC ONLY
Approval of this plan does not authorize or approve any omission or deviation from applicable regulations. Final approval is subject to field inspection. One set of approved plans shall be available on the project site at all times.
PERMIT NO.: 20-N-2332-CP
REVIEWED BY: LITO CATAYLO, OSFM
DATE: 4/ 1 /2021

GENERAL SERVICES
Department of General Services
State of California
Real Estate Services Division
Project Management & Development Branch
707 Third Street, Suite 4-105
West Sacramento, California 95605

NICHOLS MELBURG & ROSSETTO
ARCHITECTS + ENGINEERS
300 Knollcrest Drive
Redding, CA. 96002
(530) 222-3300 (530) 222-3538 FAX
http://www.nmrdesign.com

Copyright © 2019
All ideas, designs, arrangements and plans indicated or represented by this drawing are owned by, and the property of, NICHOLS, MELBURG and ROSSETTO and were created, evolved and developed for use on, and in conjunction with, the specified project. None of such ideas, designs, arrangements or plans shall be used by, or disclosed to any person, firm or corporation for any purpose whatsoever without the written permission of NICHOLS, MELBURG and ROSSETTO.

LICENSE STAMPS
REGISTERED PROFESSIONAL ENGINEER
M 33498
EXPIRES 9/30/22
MECHANICAL
STATE OF CALIFORNIA
DATE SIGNED: 10-20-20

CONSULTANT
CAPITAL
ENGINEERING CONSULTANTS, INC.
RANCHO CORDOVA, CALIFORNIA
JD - HC/JH — PM - DESIGN TEAM
181205.00 — PROJECT NO.

DRAWING STATUS
CONSTRUCTION DOCUMENTS

ISSUE

No.	Date	Description
1	10/22/2020	INITIAL PLAN REVIEW
2	01/22/2021	AGENCY RESUBMITTAL
3	03/22/2021	AGENCY RESUBMITTAL

If drawing is not 30" x 42" it is a reduced print

PROJECT
RESIDENTIAL CENTER, UKIAH: REPLACEMENT OF EXISTING RESIDENTIAL CENTER
440 EAST HILL ROAD
WILLITS, CALIFORNIA 95490
MENDOCINO COUNTY
CALIFORNIA CONSERVATION CORPS

Supervisor | Designed | Drawn: Author

DSA Application No.
02-118630

SHEET TITLE
HVAC SCHEDULES

DGS Project Number: 000000000001826
NMR Project Number: 18-6456

Sheet Scale

Sheet Number
M003

ISSUE DATE
July 9, 2021

REFRIGERANT CONCENTRATION CALC

SYSTEM	REFRIGERANT		DESIGN ROOM FLOOR AREA [SQ FT]	DESIGN ROOM CLG HEIGHT [FT]	DESIGN ROOM VOLUME [CU FT]	CONCENTRATION [LBS / 1000 CF]	
	TYPE	CHARGE [LBS]				DESIGN	LIMIT
HP/A-1	R-410A	25.8	117	9'-0"	1,053	24.5	26
SAC/A-1	R-410A	0.8	69	9'-0"	621	1.3	26

NOTES:

1. DESIGN REFRIGERANT CHARGE IS CALCULATED USING BASIS OF DESIGN EQUIPMENT MANUFACTURER'S CATALOG DATA FOR FACTORY PRE-CHARGE AND ADDITIONAL CHARGE FOR ASSUMED LINE LENGTHS. INSTALLING CONTRACTOR SHALL PROVIDE UPDATED CALCULATIONS BASED ON ACTUAL REFRIGERANT CHARGE AND MAKE THEM AVAILABLE FOR REVIEW BY FIELD INSPECTOR OR OTHER AGENCIES.
2. CONCENTRATION LIMITS ARE TAKEN FROM 2019 CALIFORNIA MECHANICAL CODE TABLE 1102.3.

KEYNOTES:

1. PROVIDE WINDOW SENSOR AT OPERABLE WINDOW, FOR INTERLOCK WITH FAN COIL, SEE 1/M601.

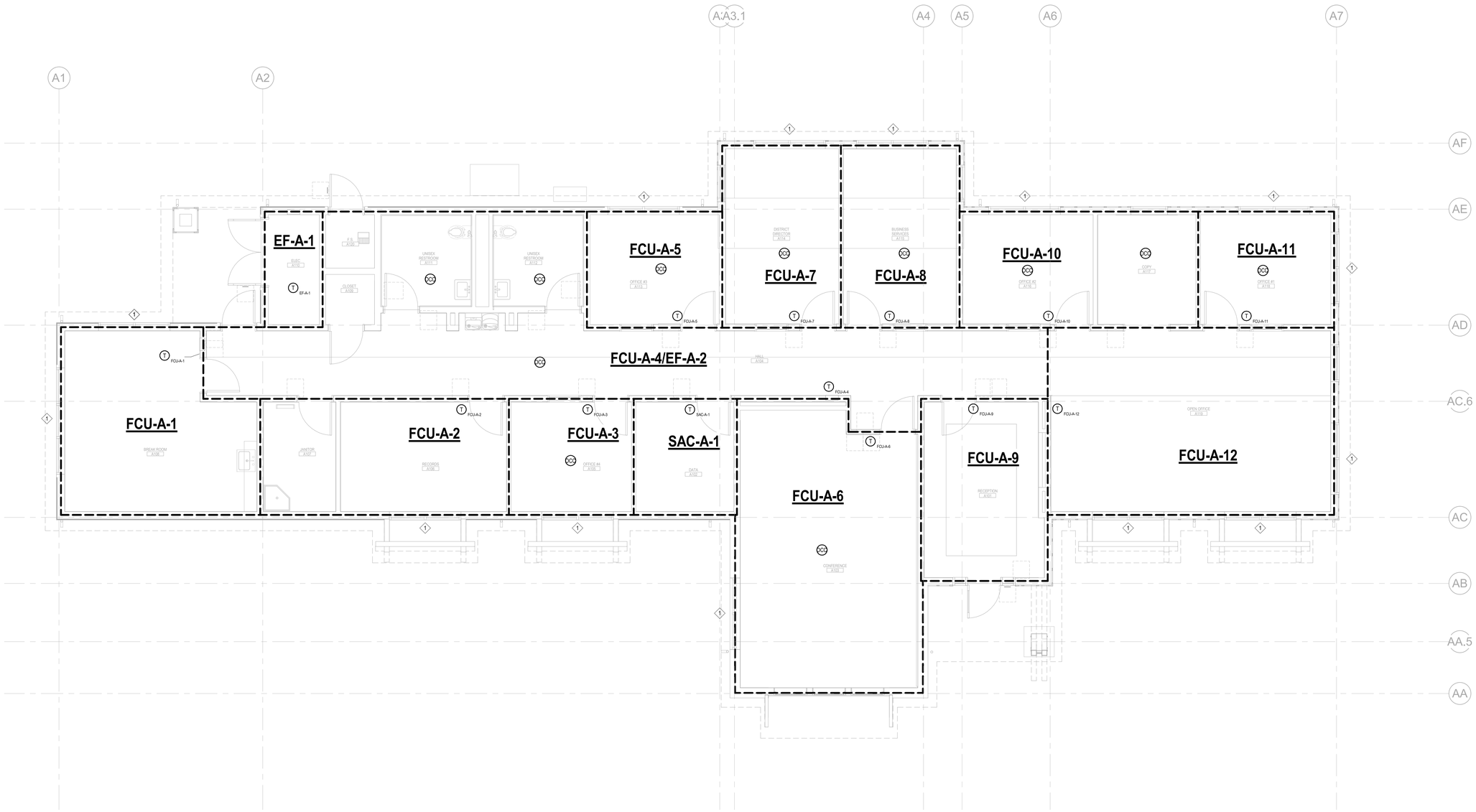

1 M101A ADMINISTRATION BLDG HVAC ZONE PLAN

SCALE: 1/4" = 1'-0"

Plot Date: 3/10/2021 1:31:15 PM
File Name: L:\Revit Local Files\DECI_DGS CCC Willits_Admin_MP18\DECI_DGS CCC Willits_Admin_MP18_jduval.rvt

IDENTIFICATION STAMP
DIV. OF THE STATE ARCHITECT
APP: 02-118630 INC:
REVIEWED FOR
SS ☐ FLS ☐ ACS ☑
DATE: 04/13/2021

OFFICE OF THE STATE FIRE MARSHAL
APPROVED FIRE AND PANIC ONLY
Approval of this plan does not authorize or approve any omission or deviation from applicable regulations. Final approval is subject to field inspection. One set of approved plans shall be available on the project site at all times.
PERMIT NO. 20-N-2332-CP
REVIEWED BY: LEO CATAYLO, OSFM
DATE: 4 / /2021

GENERAL SERVICES
Department of General Services
State of California
Real Estate Services Division
Project Management & Development Branch
707 Third Street, Suite 4-105
West Sacramento, California 95605

NICHOLS MELBURG & ROSSETTO
ARCHITECTS + ENGINEERS
300 Knollcrest Drive
Redding, CA. 96002
(530) 222-3300 (530) 222-3538 FAX
http://www.nmrdesign.com

Copyright © 2019
All ideas, designs, arrangements and plans indicated or represented by this drawing are owned by, and the property of, NICHOLS, MELBURG and ROSSETTO and were created, evolved and developed for use on, and in conjunction with, the specified project. None of such ideas, designs, arrangements or plans shall be used by, or disclosed to any person, firm or corporation for any purpose whatsoever without the written permission of NICHOLS, MELBURG and ROSSETTO.

LICENSE STAMPS

REGISTERED PROFESSIONAL ENGINEER
M 33498
EXPIRES 9/30/22
MECHANICAL
STATE OF CALIFORNIA
DATE SIGNED: 10-20-20

CONSULTANT

CAPITAL
ENGINEERING CONSULTANTS, INC.
RANCHO CORDOVA, CALIFORNIA
JD - HCUH — PM - DESIGN TEAM
181205.00 — PROJECT NO.

DRAWING STATUS
CONSTRUCTION DOCUMENTS

ISSUE

No.	Date	Description
1	10/22/2020	INITIAL PLAN REVIEW
2	01/22/2021	AGENCY RESUBMITTAL
3	03/22/2021	AGENCY RESUBMITTAL

If drawing is not 30" x 42" it is a reduced print

PROJECT
RESIDENTIAL CENTER, UKIAH: REPLACEMENT OF EXISTING RESIDENTIAL CENTER
440 EAST HILL ROAD
WILLITS, CALIFORNIA 95490
MENDOCINO COUNTY
CALIFORNIA CONSERVATION CORPS

Supervisor	Designed	Drawn
		Author

DSA Application No.
02-118630

SHEET TITLE
ADMINISTRATION BLDG HVAC ZONE PLAN

DGS Project Number	NMR Project Number
0000000000001826	18-6456

Reference North
Sheet Scale: As indicated
Sheet Number: M101A

ISSUE DATE
July 9, 2021

SHEET NOTES:

1. SEE M001 FOR TABLE OF BRANCH DUCT SIZES TO INDIVIDUAL DIFFUSERS, GRILLES & REGISTERS. SIZE SUPPLY AND RETURN AIR DUCT PLENUMS ENTERING AND LEAVING FAN COILS TO MATCH SIZE OF DUCT CONNECTIONS AT FAN COILS. LINE DUCT AS INDICATED ON PLANS.

KEY NOTES:

1 ELECTRICAL POWER METER, PROVIDED BY BAS CONTRACTOR. COORDINATE LOCATION AND INSTALLATION WITH DIV 26. SEE 2/M604 AND 1/M600.

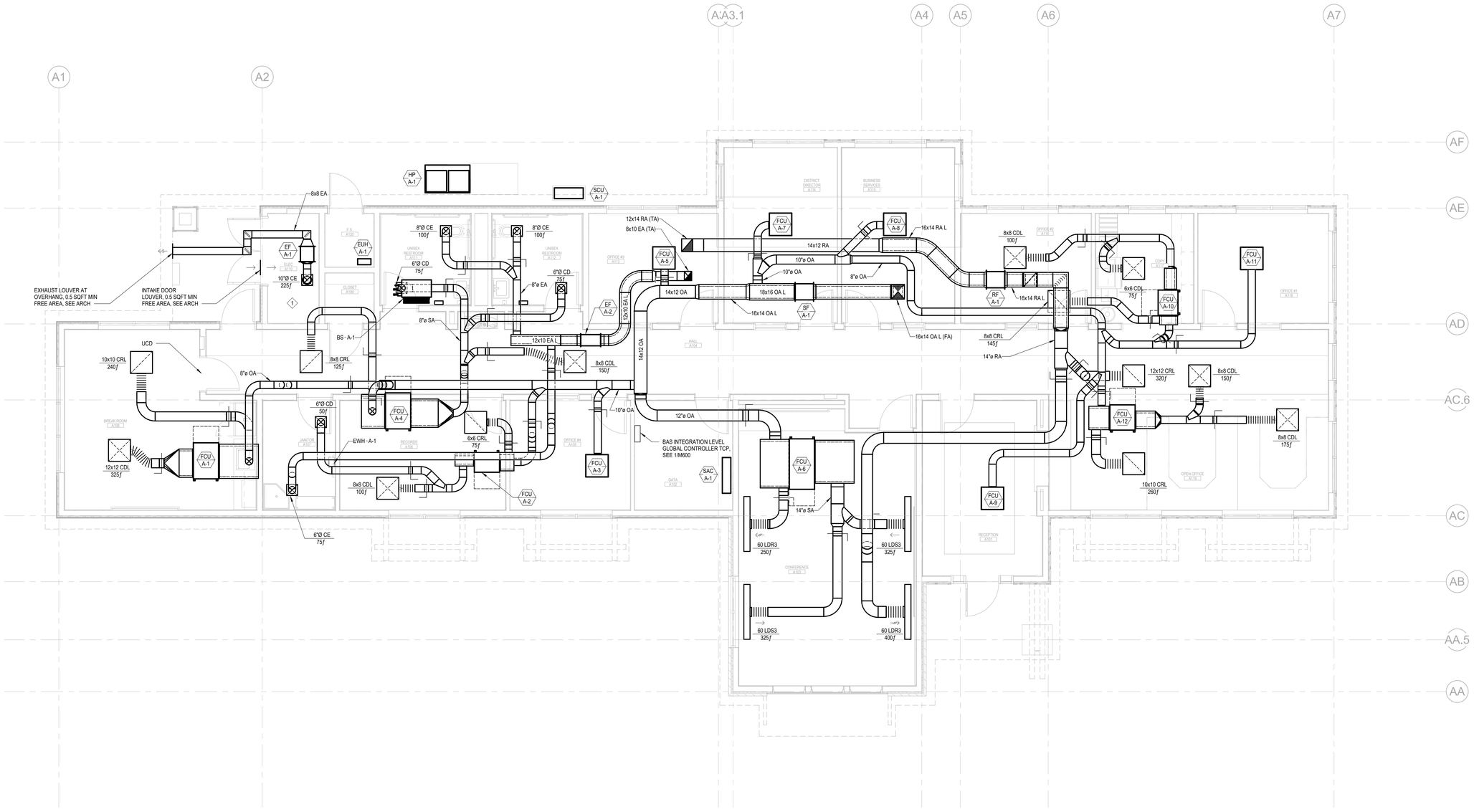

1 M201A ADMINISTRATION BLDG HVAC FLOOR PLAN

SCALE: 1/4" = 1'-0"

Plot Date: 3/18/2021 1:31:10 PM
File Name: L:\Revit Local Files\CECI_DGS CCC Willits_Admin_MP18\CECI_DGS CCC Willits_Admin_MP18_jduval.rvt

IDENTIFICATION STAMP
DIV. OF THE STATE ARCHITECT
APP: 02-118630 INC:
REVIEWED FOR
SS ☐ FLS ☐ ACS ☑
DATE: 04/13/2021

OFFICE OF THE STATE FIRE MARSHAL
APPROVED FIRE AND PANIC ONLY
Approval of this plan does not authorize or approve any omission or deviation from applicable regulations. Final approval is subject to field inspection. One set of approved plans shall be available on the project site at all times.
PERMIT NO. 20-N-2332-CP
REVIEWED BY: LEO CATAYLO, OSFM
DATE: 4 / /2021

GENERAL SERVICES
Department of General Services
State of California
Real Estate Services Division
Project Management & Development Branch
707 Third Street, Suite 4-105
West Sacramento, California 95605

NICHOLS MELBURG & ROSSETTO
ARCHITECTS + ENGINEERS
300 Knollcrest Drive
Redding, CA. 96002
(530) 222-3300 (530) 222-3538 FAX
http://www.nmrdesign.com

Copyright © 2019
All ideas, designs, arrangements and plans indicated or represented by this drawing are owned by, and the property of, NICHOLS, MELBURG and ROSSETTO and were created, evolved and developed for use on, and in conjunction with, the specified project. None of such ideas, designs, arrangements or plans shall be used by, or disclosed to any person, firm or corporation for any purpose whatsoever without the written permission of NICHOLS, MELBURG and ROSSETTO.

LICENSE STAMPS

REGISTERED PROFESSIONAL ENGINEER
DAVID M. JUVAL
M 33498
EXPIRES 9/30/22
MECHANICAL
STATE OF CALIFORNIA
DATE SIGNED: 10-20-20

CONSULTANT

CAPITAL
ENGINEERING CONSULTANTS, INC.
RANCHO CORDOVA, CALIFORNIA
JD - HCJH — PM - DESIGN TEAM
181205.00 — PROJECT NO.

DRAWING STATUS
CONSTRUCTION DOCUMENTS

ISSUE

No.	Date	Description
1	10/22/2020	INITIAL PLAN REVIEW
2	01/22/2021	AGENCY RESUBMITTAL
3	03/22/2021	AGENCY RESUBMITTAL

If drawing is not 30" x 42" it is a reduced print

PROJECT
RESIDENTIAL CENTER, UKIAH: REPLACEMENT OF EXISTING RESIDENTIAL CENTER
440 EAST HILL ROAD
WILLITS, CALIFORNIA 95490
MENDOCINO COUNTY
CALIFORNIA CONSERVATION CORPS

Supervisor	Designed	Drawn
		Author

DSA Application No.
02-118630

SHEET TITLE
ADMINISTRATION BLDG HVAC FLOOR PLAN

DGS Project Number: 000000000001826
NMR Project Number: 18-6456

Reference North
Sheet Scale: 1/4" = 1'-0"
Sheet Number: M201A

ISSUE DATE
July 9, 2021

KEY NOTES:

1. MAINTAIN MINIMUM 10' CLEARANCE BETWEEN OUTSIDE AIR INTAKE AND ALL EXHAUST AIR DISCHARGES AND VENT PIPING THROUGH ROOF (VTRs).

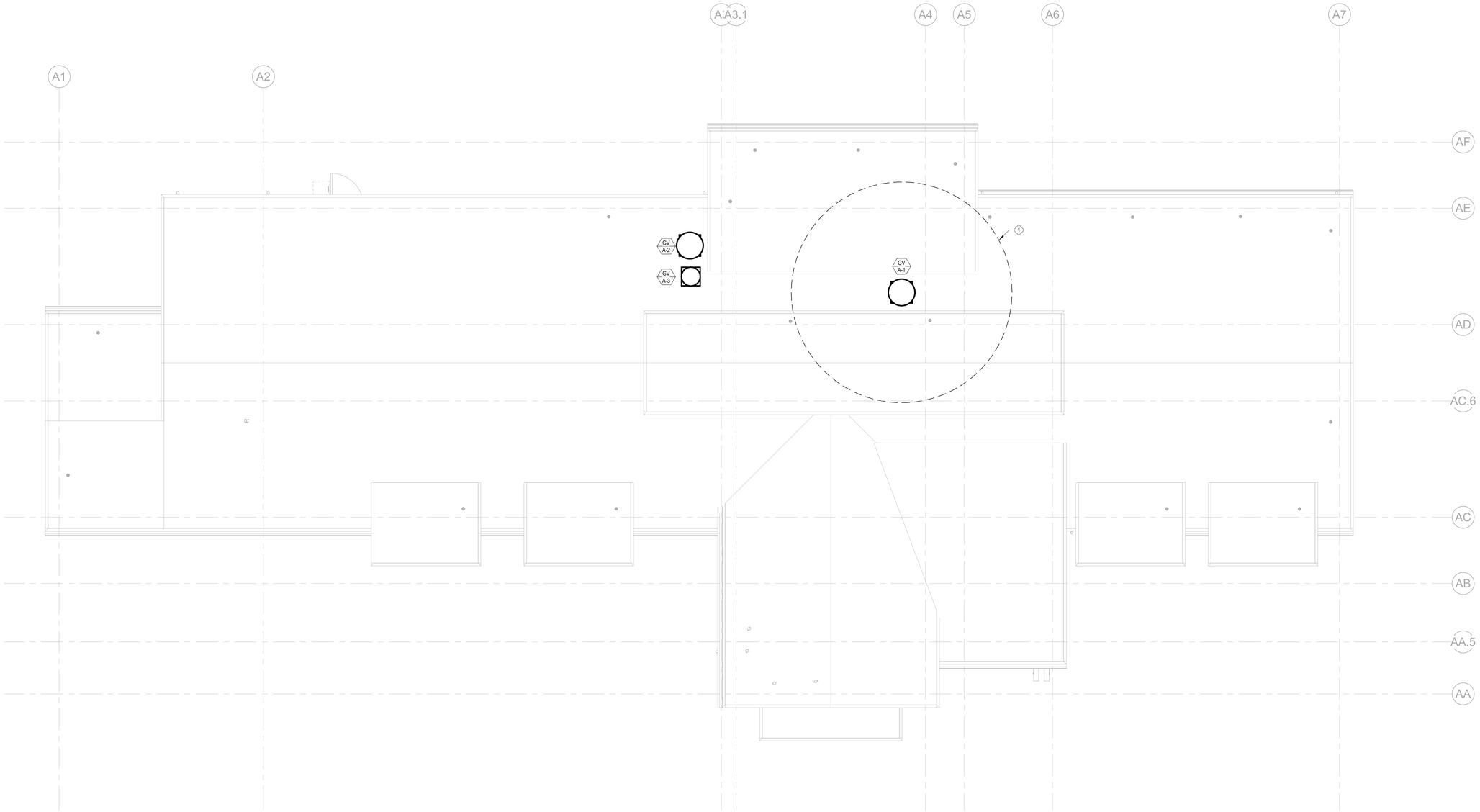

1 M202A ADMINISTRATION BLDG HVAC ROOF PLAN

SCALE: 1/4" = 1'-0"

Plot Date: 3/19/2021 1:31:50 PM
File Name: L:\Revit Local Files\CECI_DGS CCC Willits_Admin_MP18\CECI_DGS CCC Willits_Admin_MP18_jdoval.rvt

IDENTIFICATION STAMP
DIV. OF THE STATE ARCHITECT
APP: 02-118630 INC:
REVIEWED FOR
SS ☐ FLS ☐ ACS ☑
DATE: 04/13/2021

OFFICE OF THE STATE FIRE MARSHAL
APPROVED FIRE AND PANIC ONLY
Approval of this plan does not authorize or approve any omission or deviation from applicable regulations. Final approval is subject to field inspection. One set of approved plans shall be available on the project site at all times.
PERMIT NO: 20-N-2332-CP
REVIEWED BY: LEO CATAYLO, OSFM
DATE: 4 / /2021

DGS GENERAL SERVICES
Department of General Services
State of California
Real Estate Services Division
Project Management & Development Branch
707 Third Street, Suite 4-105
West Sacramento, California 95605

NICHOLS MELBURG & ROSSETTO
ARCHITECTS + ENGINEERS
300 Knollcrest Drive
Redding, CA. 96002
(530) 222-3300 (530) 222-3538 FAX
http://www.nmrdesign.com

Copyright © 2019
All ideas, designs, arrangements and plans indicated or represented by this drawing are owned by, and the property of, NICHOLS, MELBURG and ROSSETTO and were created, evolved and developed for use on, and in conjunction with, the specified project. None of such ideas, designs, arrangements or plans shall be used by, or disclosed to any person, firm or corporation for any purpose whatsoever without the written permission of NICHOLS, MELBURG and ROSSETTO.

LICENSE STAMPS

REGISTERED PROFESSIONAL ENGINEER KARL T. DAVIS M 33498 EXPIRES 9/30/22 MECHANICAL STATE OF CALIFORNIA

DATE SIGNED: 12-22-20

CONSULTANT

CAPITAL ENGINEERING CONSULTANTS, INC.
RANCHO CORDOVA, CALIFORNIA
JD - HC/JH PM - DESIGN TEAM
181205.00 PROJECT NO.

DRAWING STATUS
CONSTRUCTION DOCUMENTS

ISSUE

No.	Date	Description
1	10/22/2020	INITIAL PLAN REVIEW
2	01/22/2021	AGENCY RESUBMITTAL
3	03/22/2021	AGENCY RESUBMITTAL

If drawing is not 30" x 42" it is a reduced print

PROJECT
RESIDENTIAL CENTER, UKIAH: REPLACEMENT OF EXISTING RESIDENTIAL CENTER
440 EAST HILL ROAD
WILLITS, CALIFORNIA 95490
MENDOCINO COUNTY
CALIFORNIA CONSERVATION CORPS

Supervisor	Designed	Drawn
		Author

DSA Application No.
02-118630

SHEET TITLE
ADMINISTRATION BLDG HVAC ROOF PLAN

DGS Project Number	NMR Project Number
0000000000001826	18-6456

Reference North
Sheet Scale: 1/4" = 1'-0"
Sheet Number: M202A

ISSUE DATE
July 9, 2021

SHEET NOTES:

1. SEE 1/M400 FOR VRF REFRIGERANT PIPING DIAGRAM & SIZES.
2. SEE "SPLIT SYSTEM OUTDOOR UNIT SCHEDULE" ON M003 FOR SPLIT SYSTEM REFRIGERANT LINE SIZES.
3. INDIVIDUAL REFRIGERANT PIPES ARE NOT MODELED. RECTANGULAR SHAPES ON FLOOR PLAN INDICATE PIPE GROUPINGS WITH MULTIPLE REFRIGERANT PIPES ROUTED TOGETHER. SHOWN FOR SPACE COORDINATION AND NOT TO REPRESENT ANY PIPING ENCLOSURE.

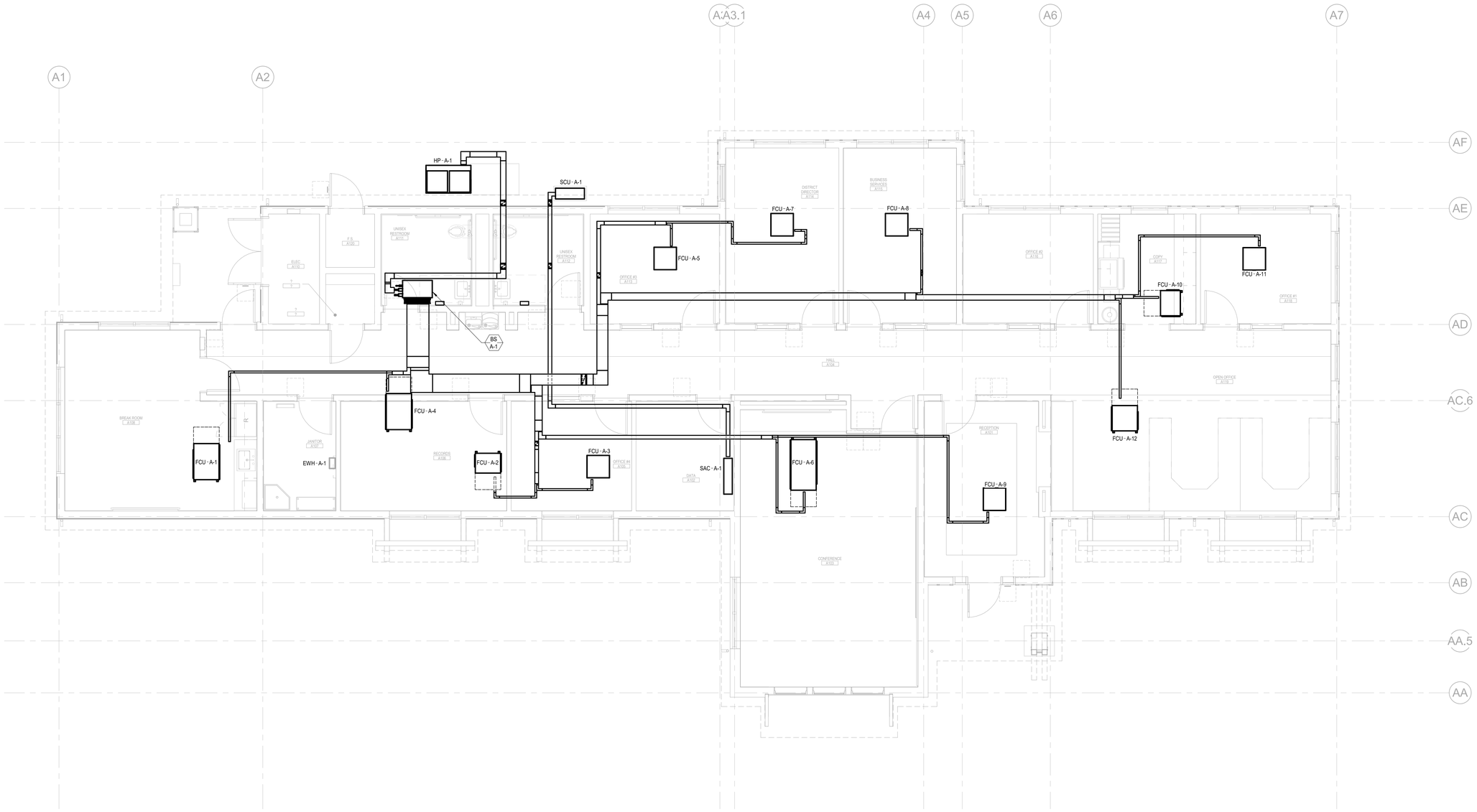

1 M301A ADMINISTRATION BLDG HVAC PIPING FLOOR PLAN

SCALE: 1/4" = 1'-0"

Plot Date: 3/19/2021 1:51:23 PM
File Name: L:\Revit Local Files\CEQ_DGS CCC Willits_Admin_MP18\CEQ_DGS CCC Willits_Admin_MP18_jdvinal.rvt

IDENTIFICATION STAMP
DIV. OF THE STATE ARCHITECT
APP: 02-118630 INC:
REVIEWED FOR
SS ☐ FLS ☐ ACS ☑
DATE: 04/13/2021

OFFICE OF THE STATE FIRE MARSHAL
APPROVED FIRE AND PANIC ONLY
Approval of this plan does not authorize or approve any omission or deviation from applicable regulations. Final approval is subject to field inspection. One set of approved plans shall be available on the project site at all times.
PERMIT NO. 20-N-2332-CP
REVIEWED BY: LEO CATAYLO, OSFM
DATE: 4 / 1 /2021

GENERAL SERVICES
Department of General Services
State of California
Real Estate Services Division
Project Management & Development Branch
707 Third Street, Suite 4-105
West Sacramento, California 95605

NICHOLS MELBURG & ROSSETTO
ARCHITECTS + ENGINEERS
300 Knollcrest Drive
Redding, CA. 96002
(530) 222-3300 (530) 222-3538 FAX
http://www.nmrdesign.com

Copyright © 2019
All ideas, designs, arrangements and plans indicated or represented by this drawing are owned by, and the property of, NICHOLS, MELBURG and ROSSETTO and were created, evolved and developed for use on, and in conjunction with, the specified project. None of such ideas, designs, arrangements or plans shall be used by, or disclosed to any person, firm or corporation for any purpose whatsoever without the written permission of NICHOLS, MELBURG and ROSSETTO

LICENSE STAMPS

REGISTERED PROFESSIONAL ENGINEER
KEVIN D. WHITE
M 33498
EXPIRES 9/30/22
MECHANICAL
STATE OF CALIFORNIA
DATE SIGNED: 10-20-20

CONSULTANT

CAPITAL
ENGINEERING CONSULTANTS, INC.
RANCHO CORDOVA, CALIFORNIA
JD - HC/JH — PM - DESIGN TEAM
181205.00 — PROJECT NO.

DRAWING STATUS
CONSTRUCTION DOCUMENTS

ISSUE

No.	Date	Description
1	10/22/2020	INITIAL PLAN REVIEW
2	01/22/2021	AGENCY RESUBMITTAL
3	03/22/2021	AGENCY RESUBMITTAL

If drawing is not 30" x 42" it is a reduced print

PROJECT
RESIDENTIAL CENTER, UKIAH: REPLACEMENT OF EXISTING RESIDENTIAL CENTER
440 EAST HILL ROAD
WILLITS, CALIFORNIA 95490
MENDOCINO COUNTY
CALIFORNIA CONSERVATION CORPS

Supervisor	Designed	Drawn
		Author

DSA Application No.
02-118630

SHEET TITLE
ADMINISTRATION BLDG HVAC PIPING FLOOR PLAN

DGS Project Number: 0000000000001826
NMR Project Number: 18-6456

Reference North
Sheet Scale: 1/4" = 1'-0"
Sheet Number: M301A

ISSUE DATE
July 9, 2021

CERTIFICATE OF COMPLIANCE		NRCC-MCH-E
Project Name:	CCC Willits - Administration Building	Report Page: (Page 1 of 12)
Project Address:		Date Prepared: 9/3/2020

This document is used to demonstrate compliance for mechanical systems that are within the scope of the permit application and are demonstrating compliance using the prescriptive path outlined in §140.4, or §141.0(b)2 for alterations .

A. GENERAL INFORMATION

01	Project Location (city)	Willits	04	Total Conditioned Floor Area	3043
02	Climate Zone	2	05	Total Unconditioned Floor Area	32
03	Occupancy Types Within Project:		06	# of Stories (Habitable Above Grade)	1
☒ Office (B)	☐ Retail (M)	☐ Non-refrigerated Warehouse (S)			
☐ Hotel/ Motel Guest Rooms (R-1)	☐ School (E)	☐ Healthcare Facility (H)			
☐ High-Rise Residential (R-2/R-3)	☐ Relocatable Class Bldg (E)	☒ Other (write in)			See Table J

B. PROJECT SCOPE

This table includes mechanical systems or components that are within the scope of the permit application and are demonstrating compliance using the prescriptive path outlined in §140.4, or §141.0(b)2 for alterations .

01 Air System(s)	02 Wet System Components	03 Dry System Components
☒ Heating Air System	☐ Water Economizer	☐ Air Economizer
☒ Cooling Air System	☐ Pumps	☐ Electric Resistance Heat
Mechanical Controls	☐ System Piping	☒ Fan Systems
☒ Mechanical Controls	☐ Cooling Towers	☐ Ductwork
	☐ Chillers	☒ Ventilation
	☐ Boilers	☐ Zonal Systems/ Terminal Boxes

CERTIFICATE OF COMPLIANCE		NRCC-MCH-E
Project Name:	CCC Willits - Administration Building	Report Page: (Page 2 of 12)
Project Address:		Date Prepared: 9/3/2020

C. COMPLIANCE RESULTS

Table C will indicate if the project data input into the compliance document is compliant with mechanical requirements. This table is not editable by the user. If this table says "DOES NOT COMPLY" or "COMPLIES with Exceptional Conditions" refer to Table D., or the table indicated as not compliant for guidance.

01		02		03		04		05		06		07		08	09
System Summary §110.1, §110.2, §140.4	AND	Pumps §140.4(k)	AND	Fans/ Economizers §140.4(c), §140.4(e)	AND	System Controls §110.2, §120.2, §140.4(f)	AND	Ventilation §120.1	AND	Terminal Box Controls §140.4(d)	AND	Distribution §120.3, §140.4(l)	AND	Cooling Towers §110.2(e)2	Compliance Results
(See Table F)		(See Table G)		(See Table H)		(See Table I)		(See Table J)		(See Table K)		(See Table L)		(See Table M)	
Yes	AND		AND	Yes	AND	Yes	AND	Yes	AND		AND		AND		COMPLIES
Mandatory Measures Compliance (See Table Q for Details)												COMPLIES			

D. EXCEPTIONAL CONDITIONS

This table is auto-filled with uneditable comments because of selections made or data entered in tables throughout the form.

E. ADDITIONAL REMARKS

This table includes remarks made by the permit applicant to the Authority Having Jurisdiction.

CERTIFICATE OF COMPLIANCE		NRCC-MCH-E
Project Name:	CCC Willits - Administration Building	Report Page: (Page 3 of 12)
Project Address:		Date Prepared: 9/3/2020

F. HVAC SYSTEM SUMMARY (DRY & WET SYSTEMS)

This table is used to demonstrate compliance for mechanical equipment with mandatory requirements found in §110.1 and §110.2(a) and prescriptive requirements found in §140.4(a), §140.4(b) and §140.4(k) or §141.0(b)2 for alterations.

Dry System Equipment Sizing (includes air conditioners, condensers, heat pumps, VRF, furnaces and unit heaters)

01	02	03	04	05	06	07	08	09	10	11
Name or Item Tag	Equipment Category per Tables 110.2	Equipment Type per Tables 110.2 & Title 20	Smallest Size Available[1] §140.4(a)	Equipment Sizing per Mechanical Schedule (Btu/h) §140.4 (a&b)						
				Heating Output[2,3]			Cooling Output[2,3]		Load Calculations[3,4]	
				Per Design (kBtu/h)	Rated (kBtu/h)	Supp. Heating Output (kBtu/h)	Sensible Per Design (kBtu/h)	Rated (kBtu/h)	Total Heating Load	Total Sensible Cooling Load
SAC-A-1	Unitary AC/ Condensers	AC, air cooled, split (1 phase)	Yes	0	0	0	19536	21200	378	1350
HP-A-1	Variable Refrigerant Flow	VRF heat pump, air cooled	Yes	91670	115195	0	140724	143945	106143	85971

[1]FOOTNOTES: Equipment shall be the smallest size, within the available options of the desired equipment line, necessary to meet the design heating and cooling loads of the building per §140.4(a). Healthcare facilities are excepted.

[2]It is common practice to show rated output capacity on the equipment schedule. Sensible cooling output comes from specification sheet tables.

[3] If equipment is heating only, leave cooling output and load blank. If equipment is cooling only, leave heating output and load blank.

[4] Authority Having Jurisdiction may ask for load calculations used for compliance per §140.4(b).

Dry System Equipment Efficiency (other than Package Terminal Air Conditioners (PTAC) and Package Terminal Heat Pumps (PTHP))

01	02	03	04	05	06	07	08	09
Name or Item Tag	Size Category (Btu/h)	Heating Mode				Cooling Mode		
		Rating Condition (°F)	Efficiency Unit	Minimum Efficiency Required per Tables 110.2 / Title 20	Design Efficiency	Efficiency Unit	Minimum Efficiency Required per Tables 110.2 / Title 20	Design Efficiency
SAC-A-1	65,000					SEER	14.0	18
HP-A-1	135,000 and 240,000	47 Fdb/ 43 Fwb OSA	COP	3.2	3.42	EER IEER	10.6 13.9	11.6 21.6

CERTIFICATE OF COMPLIANCE		NRCC-MCH-E
Project Name:	CCC Willits - Administration Building	Report Page: (Page 4 of 12)
Project Address:		Date Prepared: 9/3/2020

G. PUMPS

This section does not apply to this project.

H. FAN SYSTEMS & AIR ECONOMIZERS

This table is used to demonstrate compliance with prescriptive requirements found in §140.4(c), §140.4(e) and §140.4(m) for fan systems. Fan systems serving healthcare facilities, or those serving only process loads, are exempt from these requirements and do not need to be included in Table H.

System Name:	SAC-A-1	Economizer:[1]	NA: 54 kBtu/h cooling	Economizer Controls:	Designed per and (m)	System Fan Type:	Fixed Flow
01	02	03	04	05	06	07	08
Fan Name or Item Tag	Fan Function	Qty	Maximum Design Supply Airflow (CFM)	HP Unit[2]	Design HP	Fan Power Pressure Drop Adjustment - Table 140.4-B	
						Device	Design Airflow through Device (CFM)
SF	Supply	1	700	BHP	0.05		
Total System Design Supply Airflow (CFM):			700	Total System Design (B)HP:	0.05	Maximum System Fan Power (B)HP:	0.66

CERTIFICATE OF COMPLIANCE		NRCC-MCH-E
Project Name:	CCC Willits - Administration Building	Report Page: (Page 5 of 12)
Project Address:		Date Prepared: 9/3/2020

H. FAN SYSTEMS & AIR ECONOMIZERS

System Name:	HP-A-1	Economizer:[1]	Differential Temperature	Economizer Controls:	Designed per and (m)	System Fan Type:	Fixed Flow
01	02	03	04	05	06	07	08
Fan Name or Item Tag	Fan Function	Qty	Maximum Design Supply Airflow (CFM)	HP Unit[2]	Design HP	Fan Power Pressure Drop Adjustment - Table 140.4-B	
						Device	Design Airflow through Device (CFM)
VRF	Other (Transfer, VAV box)	1	3700	BHP	0.02		
VRF	Other (Transfer, VAV box)	1	0	BHP	0.09		
VRF	Other (Transfer, VAV box)	1	0	BHP	0.02		
VRF	Other (Transfer, VAV box)	1	0	BHP	0.24		
EF	Exhaust	1	0	BHP	0.04		
VRF	Other (Transfer, VAV box)	1	0	BHP	0.02		
VRF	Other (Transfer, VAV box)	1	0	BHP	0.44		
VRF	Other (Transfer, VAV box)	1	0	BHP	0.02		
VRF	Other (Transfer, VAV box)	1	0	BHP	0.02		
VRF	Other (Transfer, VAV box)	1	0	BHP	0.02		
VRF	Other (Transfer, VAV box)	1	0	BHP	0.09		
VRF	Other (Transfer, VAV box)	1	0	BHP	0.02		
VRF	Other (Transfer, VAV box)	1	0	BHP	0.22		
Total System Design Supply Airflow (CFM):			3700	Total System Design (B)HP:	1.28	Maximum System Fan Power (B)HP:	0.66

[1] FOOTNOTES: Computer room economizers must meet requirements of §140.9(a) and will be documented on the NRCC-PRC-E document.

[2] If total filter pressure drop (SPd) is greater than 1 in WC, or 245 Pascal then enter it and total fan pressure drop across the fan (SPf) for system.

CERTIFICATE OF COMPLIANCE		NRCC-MCH-E
Project Name:	CCC Willits - Administration Building	Report Page: (Page 6 of 12)
Project Address:		Date Prepared: 9/3/2020

I. SYSTEM CONTROLS

This table is used to demonstrate compliance with mandatory controls in §110.2 and §120.2 and prescriptive controls in §140.4(f) and (n) or requirements in §141.0(b)2E for altered space conditioning systems.

01	02	03	04	05	06	07	08	09
System Name	System Zoning	Conditioned Floor Area Being Served (ft²)	Thermostats §110.2(b) & (c)[1], §120.2(a)or §141.0(b)2E	Shut-Off Conrols §120.2(e)	Isolation Zone Controls §120.2(a)	Demand Response §120.2(b)	Supply Air Temp. Reset §140.4(f)	Window Interlocks per §140.4(n)
SAC-A-1	Single zone	<= 25,000 ft²	Setback	Auto Timer Switch	4 Hour Timer	EMCS	Included	Provided
HP-A-1	Multi-zone w/ DDC to zone	<= 25,000 ft²	Setback	Auto Timer Switch	4 Hour Timer	EMCS	Included	Provided

[1]FOOTNOTES: Gravity gas wall heaters, gravity floor heaters, gravity room heaters, non-central electric heaters, fireplaces or decorative gas appliances, wood stoves are not required to have setback thermostats.

*Notes: Controls with a * require a note in the space below explaining how compliance is achieved. EX: system 1: SA Temp Reset: Exempt because zones compliant with §140.4(d) ; EXCEPTION 1 to §140.4(f)*

J. VENTILATION AND INDOOR AIR QUALITY

This table is used to demonstrate compliance with mandatory ventilation requirements in §120.1 and §120.2(e)3& for all nonresidential, high-rise residential and hotel/motel occupancies. For alterations, only ventilation systems being altered within the scope of the permit application need to be documented in this table. In lieu of this table, the required outdoor ventilation rates and airflows may be shown on the plans or the calculations can be presented in a spreadsheet.

01	☐	Check the box if the project is showing ventilation calculations on the plans, or attaching the calculations instead of completing this table.
02	☐	Check this box if the project included new or altered high-rise residential dwelling units.
03	☐	Check the box if the project is using natural ventilation in any nonresidential or hotel/motel spaces to meet required ventilation rates per §120.1(c)2.

Nonresidential and Hotel/ Motel Ventilation Systems

04	05			06			07
System Name	SAC-A-1	System Design OA CFM Airflow[1]	0	System Design Transfer Air CFM		0	Air Filtration per §120.1(c) and §141.0(b)2 [2] Provided per §120.1(c) (NR and Hotel/Motel))
08	09	10	11	12	13	14	15	16

CERTIFICATE OF COMPLIANCE		NRCC-MCH-E
Project Name:	CCC Willits - Administration Building	Report Page: (Page 7 of 12)
Project Address:		Date Prepared: 9/3/2020

J. VENTILATION AND INDOOR AIR QUALITY

Space Name ot item Tag	Mechanical Ventilation Required per §120.1(c)3 [3] Occupancy Type[4]	Conditioned Floor Area (ft²)	# of Shower heads/ toilets	# of people[5]	Required Min OA CFM	Exh. Vent per §120.1(c)4 Required Min CFM	Provided per Design CFM	DCV or Sensor Controls per §120.1(d)3, §120.1(d)5, and §120.1(e)3 [6]	
SAC-A-1	All others	69			0	0	0	DCV	NA: Not required per §120.1(d)3
								Occ Sensor	
04		05			06			07	
System Name	HP-A-1	System Design OA CFM Airflow[1]		707.75	System Design Transfer Air CFM		0	Air Filtration per §120.1(c) and §141.0(b)2 [2]	
								Provided per §120.1(c) (NR and Hotel/Motel))	
08	09	10	11	12	13	14	15	16	
Space Name ot item Tag	Mechanical Ventilation Required per §120.1(c)3 [3] Occupancy Type[4]	Conditioned Floor Area (ft²)	# of Shower heads/ toilets	# of people[5]	Required Min OA CFM	Exh. Vent per §120.1(c)4 Required Min CFM	Provided per Design CFM	DCV or Sensor Controls per §120.1(d)3, §120.1(d)5, and §120.1(e)3 [6]	
FCU-A-1	Break room	269			134.5	0	0	DCV	NA: Not required per §120.1(d)3
								Occ Sensor	
FCU-A-2	All others	218			0	0	0	DCV	NA: Not required per §120.1(d)3
								Occ Sensor	
FCU-A-3	Office space	119			17.8	0	0	DCV	NA: Not required per §120.1(d)3
								Occ Sensor	
FCU-A-4	Corridor Transition	608			91.2	0	225	DCV	NA: Not required per §120.1(d)3
								Occ Sensor	

CERTIFICATE OF COMPLIANCE		NRCC-MCH-E
Project Name:	CCC Willits - Administration Building	Report Page: (Page 8 of 12)
Project Address:		Date Prepared: 9/3/2020

J. VENTILATION AND INDOOR AIR QUALITY

FCU-A-5	Office space	117			17.6	0	0	DCV	NA: Not required per §120.1(d)3
								Occ Sensor	
FCU-A-6	Conference/ meeting	401			200.5	0	0	DCV	NA: Not required per §120.1(d)3
								Occ Sensor	
FCU-A-7	Office space	164			24.6	0	0	DCV	NA: Not required per §120.1(d)3
								Occ Sensor	
FCU-A-8	Office space	164			24.6	0	0	DCV	NA: Not required per §120.1(d)3
								Occ Sensor	
FCU-A-9	Main Entry Lobby	171			85.5	0	0	DCV	NA: Not required per §120.1(d)3
								Occ Sensor	
FCU-A-10	Office space	207			31	0	0	DCV	NA: Not required per §120.1(d)3
								Occ Sensor	
FCU-A-11	Office space	118			17.7	0	0	DCV	NA: Not required per §120.1(d)3
								Occ Sensor	
FCU-A-12	Office space	418			62.7	0	0	DCV	NA: Not required per §120.1(d)3
								Occ Sensor	

[1] FOOTNOTES: System CFM should include both mechanical and natural ventilation for the zone/system

[2] Air filtration requirements apply to the following three system types per §120.1(c)1A : space conditioning systems utilizing ducts to supply air to occupiable space; supply-only ventilation systems providing outside air to occupiable space; supply side of balanced ventilation systems including heat recovery and energy recovery ventilation systems providing outside air to occupiable space.

[3] Uniform Mechanical Code may have more stringent ventilation requirements; the most stringent code requirement takes precedence.

[4] See Standards Tables 120.1-A and 120.1-B.

CERTIFICATE OF COMPLIANCE		NRCC-MCH-E
Project Name:	CCC Willits - Administration Building	Report Page: (Page 9 of 12)
Project Address:		Date Prepared: 9/3/2020

J. VENTILATION AND INDOOR AIR QUALITY

[5] For lecture halls with fixed seating, the expected number of occupants shall be determined in accordance with the California Building Code.

[6] §120.2(e)3 requires systems serving rooms that are required by §130.1(c) to have lighting occupancy sensing controls to also have occupancy sensing zone controls for ventilation. Examples of spaces which require lighting occupancy sensors include offices 250ft² or smaller, multipurpose rooms less than 1,000 ft², classrooms, conference rooms, restrooms, aisles and open areas in warehouses, library book stack aisles, corridors, stairwells, parking garages, and loading and unloading zones, unless excepted by §130.1(c).

K. TERMINAL BOX CONTROLS

This section does not apply to this project.

L. DISTRIBUTION (DUCTWORK and PIPING)

This section does not apply to this project.

M. COOLING TOWERS

This section does not apply to this project.

N. DECLARATION OF REQUIRED CERTIFICATES OF INSTALLATION

Selections have been made based on information provided in previous tables of this document. If any selection needs to be changed, please explain why in Table E Additional Remarks. These documents must be provided to the building inspector during construction and can be found online at https://www.energy.ca.gov/title24/2019standards/2019_compliance_documents/Nonresidential_Documents/NRCI/

Yes	No	Form/Title	Field Inspector Pass	Field Inspector Fail
●	○	NRCI-MCH-01-E - Must be submitted for all buildings	☐	☐

Plot Date: 3/16/2021 1:13:25 PM
File Name: L:\Revit Local Files\CEC_DGS CCC Willits_Admin_MP18\CEC_DGS CCC Willits_Admin_MP18_jduval.rvt

IDENTIFICATION STAMP
DIV. OF THE STATE ARCHITECT
APP: 02-118630 INC:
REVIEWED FOR
SS ☐ FLS ☐ ACS ☑
DATE: 04/13/2021

OFFICE OF THE STATE FIRE MARSHAL
APPROVED FIRE AND PANIC ONLY
Approval of this plan does not authorize or approve any omission or deviation from applicable regulations. Final approval is subject to field inspection. One set of approved plans shall be available on the project site at all times.
PERMIT NO. 20-N-2332-CP
REVIEWED BY: LEO CATAYLO, OSFM
DATE: 4/1/2021

DGS GENERAL SERVICES
Department of General Services
State of California
Real Estate Services Division
Project Management & Development Branch
707 Third Street, Suite 4-105
West Sacramento, California 95605

NICHOLS MELBURG & ROSSETTO ARCHITECTS + ENGINEERS
300 Knollcrest Drive
Redding, CA. 96002
(530) 222-3300 (530) 222-3538 FAX
http://www.nmrdesign.com

Copyright © 2019
All ideas, designs, arrangements and plans indicated or represented by this drawing are owned by, and the property of, NICHOLS, MELBURG and ROSSETTO and were created, evolved and developed for use on, and in conjunction with, the specified project. None of such ideas, designs, arrangements or plans shall be used by, or disclosed to any person, firm or corporation for any purpose whatsoever without the written permission of NICHOLS, MELBURG and ROSSETTO

LICENSE STAMPS

DATE SIGNED: 10-20-20

CONSULTANT

CAPITAL ENGINEERING CONSULTANTS, INC.
RANCHO CORDOVA, CALIFORNIA
JD - HC/JH PM - DESIGN TEAM
181205.00 PROJECT NO.

DRAWING STATUS
CONSTRUCTION DOCUMENTS

ISSUE

No.	Date	Description
1	10/22/2020	INITIAL PLAN REVIEW
2	01/22/2021	AGENCY RESUBMITTAL
3	03/22/2021	AGENCY RESUBMITTAL

If drawing is not 30" x 42" it is a reduced print

PROJECT
RESIDENTIAL CENTER, UKIAH: REPLACEMENT OF EXISTING RESIDENTIAL CENTER
440 EAST HILL ROAD
WILLITS, CALIFORNIA 95490
MENDOCINO COUNTY
CALIFORNIA CONSERVATION CORPS

Supervisor	Designed	Drawn
		Author

DSA Application No.
02-118630

SHEET TITLE
ADMINISTRATION BLDG TITLE 24 COMPLIANCE

DGS Project Number	NMR Project Number
0000000000001826	18-6456

Sheet Scale

Sheet Number
M401A

ISSUE DATE
July 9, 2021

STATE OF CALIFORNIA
Mechanical Systems
NRCC-MCH-E — CALIFORNIA ENERGY COMMISSION

CERTIFICATE OF COMPLIANCE		NRCC-MCH-E
Project Name:	CCC Willits - Administration Building	Report Page: (Page 10 of 12)
Project Address:		Date Prepared: 9/3/2020

O. DECLARATION OF REQUIRED CERTIFICATES OF ACCEPTANCE

Selections have been made based on information provided in previous tables of this document. If any selection needs to be changed, please explain why in Table E Additional Remarks. These documents must be provided to the building inspector during construction and can be found online at https://www.energy.ca.gov/title24/2019standards/2019_compliance_documents/Nonresidential_Documents/NRCA/

Yes	No	Form/Title	Field Inspector Pass	Field Inspector Fail
●	○	NRCA-MCH-02-A - Outdoor Air must be submitted for all newly installed HVAC units. Note: MCH-02-A can be performed in conjunction with MCH-07-A Supply Fan VFD Acceptance (if applicable) since testing activities overlap.	☐	☐
●	○	NRCA-MCH-03-A - Constant Volume Single Zone HVAC NOTE: This form does not automatically move to "Yes". If Constant Volume Single Zone HVAC Systems are included in the scope, permit applicant should move this form to "Yes".	☐	☐
○	●	NRCA-MCH-04-A - Air Distribution Duct Leakage	☐	☐
○	●	NRCA-MCH-05-A - Air Economizer Controls	☐	☐
○	●	NRCA-MCH-06-A Demand Control Ventilation Systems must be submitted for all systems required to employ demand controlled ventilation (refer to §120.1(c)3) can vary outside ventilation flow rates based on maintaining interior carbon dioxide (CO_2) concentration setpoints.	☐	☐
○	●	NRCA-MCH-07-A Supply Fan Variable Flow Controls	☐	☐
○	●	NRCA-MCH-08-A Valve Leakage Test	☐	☐
○	●	NRCA-MCH-09-A Supply Water Temperature Reset Controls	☐	☐
○	●	NRCA-MCH-10-A Hydronic System Variable Flow Controls	☐	☐
●	○	NRCA-MCH-11-A Automatic Demand Shed Controls	☐	☐
○	●	NRCA-MCH-12-A FDD for Packaged Direct Expansion Units	☐	☐
○	●	NRCA-MCH-13-A Automatic FDD for Air Handling Units and Zone Terminal Units Acceptance	☐	☐
○	●	NRCA-MCH-14-A Distributed Energy Storage DX AC Systems Acceptance NOTE: This form does not automatically move to "Yes". If Distributed Energy System DX AC Systems are included in teh scope permit applicant should move this form to "Yes".	☐	☐
○	●	NRCA-MCH-15-A Thermal Energy Storage (TES) System Acceptance NOTE: This form does not automatically move to "Yes". If Chilled water Storage, Ice-on-Coil Internal Melt, Ice-on-Coil External melt, Ice Harvester, Brine, Ice-Slurry, Eutecti Salt, Clathrate Hydrate Slurry (CHS), Cryogenic or Encapsulated (Ice Ball) Systems are included in the scope, permit applicant should move this form to 'Yes".	☐	☐
○	●	NRCA-MCH-16-A Supply Air Temperature Reset Controls	☐	☐
○	●	NRCA-MCH-17-A Condenser Water Temperature Reset Controls	☐	☐
○	●	NRCA-MCH-18-A Energy Management Control Systems	☐	☐

Registration Number: — Registration Date/Time: — Registration Provider: Energysoft

CA Building Energy Efficiency Standards - 2019 Nonresidential Compliance — Report Version: 2019.0.001, Schema Version: rev 20190401 — Report Generated: 2020-09-03 16:06:24

STATE OF CALIFORNIA
Domestic Water Heating System
NRCC-PLB-E — CALIFORNIA ENERGY COMMISSION

CERTIFICATE OF COMPLIANCE		NRCC-PLB-E
Project Name:	CCC Willits - Administration Building	Report Page: (Page 1 of 7)
Project Address:		Date Prepared: 9/3/2020

This document is used to demonstrate compliance for nonresidential occupancies with requirements in §110.1, §110.3, §120.3, and §140.5, and with requirements in §141.0 for additions and alterations, for domestic water heating scopes using the prescriptive path. For high-rise residential and hotel/motel occupancies compliance is demonstrated with requirements in §110.1, §110.3, §120.3, §150.0 and §150.1(c)8, and with requirements §150.2 for additions.

A. GENERAL INFORMATION

01	Project Location (city)	Willits	02	Climate Zone	2
03	Occupancy Types Within Project (select all that apply):				
☒ Nonresidential	☐ High-Rise Residential	☐ Hotel/Motel			
☐ State Building	☐ Healthcare Facility	☐ Other (Write In)			

B. PROJECT SCOPE

This table includes domestic water heating systems that are within the scope of the permit application and are demonstrating compliance using the prescriptive paths outlined in §140.5, §150.1(c)8, and §141.0(b)2N for additions or alterations. Solar water heating systems are documented on the NRCC-SRA compliance document. Combined hydronic water heating systems are documented on the NRCC-MCH compliance document.

01	02	03		
My project consists of (check all that apply):	System Type[1,2]	System Components		
☒ New system (DHW system being installed for the first time in newly constructed building)	Individual System (serving nonresidential spaces)	☒ Equipment	☒ Distribution	☒ Controls
☐ System Alteration (equipment, distribution or controls)		☐ Equipment	☐ Distribution	☐ Controls

[1] *FOOTNOTES: Point of use water heaters, or other non-central systems used to serve nonresidential spaces, are considered individual systems.*

[2] *Dwelling units refers to hotel/motel guest rooms and units in a high-rise residential occupancy.*

Registration Number: — Registration Date/Time: — Registration Provider: Energysoft

CA Building Energy Efficiency Standards - 2019 Nonresidential Compliance — Report Version: 2019.0.001, Schema Version: rev 20190401 — Report Generated: 2020-09-03 16:06:24

STATE OF CALIFORNIA
Domestic Water Heating System
NRCC-PLB-E — CALIFORNIA ENERGY COMMISSION

CERTIFICATE OF COMPLIANCE		NRCC-PLB-E
Project Name:	CCC Willits - Administration Building	Report Page: (Page 4 of 7)
Project Address:		Date Prepared: 9/3/2020

G. DOMESTIC HOT WATER DISTRIBUTION SYSTEM

This table is used to demonstrate compliance for nonresidential occupancies with distribution requirements in §120.3 and §140.5. For high-rise residential and hotel/motel occupancies, compliance is demonstrated with requirements §110.3(c)1, §120.3, §150.0, §150.1

Mandatory Pipe Insulation All Occupancies		
12	☒	For systems serving nonresidential spaces, pipe insulation for the following applications is specified to comply with Table 120.3-A (see below) per §120.3 : • Recirculating system piping, including supply and return piping of the water heater • The first 8 ft of hot and cold outlet piping, including between storage tank and heat trap, for a nonrecirculating storage system • Pipes that are externally heated
13	☒	Insulation shall be protected from damage, including that due to sunlight, moisture, equipment maintenance, and wind. Insulation exposed to weather shall be installed with a cover suitable for outdoor service per §120.3(b) and §150.0(j)3

TABLE 120.3-A PIPE INSULATION THICKNESS

Fluid Temperature Range (°F)	Conductivity Range (Btu-in per hour per ft² per °F)	Insulation Mean Rating Temp (°F)	Nominal Pipe Diameter (in)		
			< 1	1 to < 1.5	1.5 to < 4
			Minimum Insulation Required		
105-140	0.22 - 0.28	100	1.0 in or R-7.7	1.5 in or R-12.5	1.5 in or R-11

Registration Number: — Registration Date/Time: — Registration Provider: Energysoft

CA Building Energy Efficiency Standards - 2019 Nonresidential Compliance — Report Version: 2019.0.001, Schema Version: rev 20190401 — Report Generated: 2020-09-03 16:06:24

STATE OF CALIFORNIA
Mechanical Systems
NRCC-MCH-E — CALIFORNIA ENERGY COMMISSION

CERTIFICATE OF COMPLIANCE		NRCC-MCH-E
Project Name:	CCC Willits - Administration Building	Report Page: (Page 11 of 12)
Project Address:		Date Prepared: 9/3/2020

O. DECLARATION OF REQUIRED CERTIFICATES OF ACCEPTANCE

○	●	NRCA-MCH-19-A Occupancy Sensor Controls	☐	☐
○	●	NRCA-MCH-20 Multi-Family Ventilation	☐	☐
○	●	NRCA-MCH-21 Multi-Family Envelope Leakage	☐	☐

P. DECLARATION OF REQUIRED CERTIFICATES OF VERIFICATION

Selections have been made based on information provided in previous tables of this document. If any selection needs to be changed, please explain why in Table E Additional Remarks. These documents must be completed by a HERS Rater and provided to the building inspector during construction. The finsl documents must be creted by a HERS Providrs registry, but drafts can be found online at https://www.energy.ca.gov/title24/2019standards/2019_compliance_documents/Nonresidential_Documents/NRCV/

Yes	No	Form/Title	Field Inspector Pass	Field Inspector Fail
○	●	NRCV-MCH-04-H Duct Leakaage Test *NOTE: Must be completed by a HERS Rater*	☐	☐
○	●	NRCV-MCH-24 Enclosure Air Leakaage Worksheet *NOTE: Must be completed by a HERS Rater*	☐	☐
○	●	NRCV-MCH-27 High-rise Residential *NOTE: Must be completed by a HERS Rater*	☐	☐
○	●	NRCV-MCH-32 Local Mechanical Exhaust *NOTE: Must be completed by a HERS Rater*	☐	☐

Q. MANDATORY MEASURES DOCUMENTATION LOCATION

This table is used to indicate where mandatory measures are documented in the plan set or construction documentation.

01		02
Compliance with Mandatory Measures documented through MCH Mandatory Measures Note Block[1]	Yes	Plan sheet or construction document location: M-Sheets

Registration Number: — Registration Date/Time: — Registration Provider: Energysoft

CA Building Energy Efficiency Standards - 2019 Nonresidential Compliance — Report Version: 2019.0.001, Schema Version: rev 20190401 — Report Generated: 2020-09-03 16:06:24

STATE OF CALIFORNIA
Domestic Water Heating System
NRCC-PLB-E — CALIFORNIA ENERGY COMMISSION

CERTIFICATE OF COMPLIANCE		NRCC-PLB-E
Project Name:	CCC Willits - Administration Building	Report Page: (Page 2 of 7)
Project Address:		Date Prepared: 9/3/2020

C. COMPLIANCE RESULTS

Table C will indicate if the project data input into the compliance document is compliant with water heating requirements. If this table says "DOES NOT COMPLY" or "COMPLIES with Exceptional Conditions" refer to Table D or the table indicated as not compliant for guidance.

01	02	03	04
Domestic Hot Water Equipment	Distribution Systems	Controls	**Compliance Results**
Table F	Table G	Table H	
Yes	Yes	Yes	COMPLIES

D. EXCEPTIONAL CONDITIONS

This table is auto-filled with uneditable comments because of selections made or data entered in tables throughout the form.

E. ADDITIONAL REMARKS

This table is includes remarks made by the permit applicant to the Authority Having Jurisdiction.

Registration Number: — Registration Date/Time: — Registration Provider: Energysoft

CA Building Energy Efficiency Standards - 2019 Nonresidential Compliance — Report Version: 2019.0.001, Schema Version: rev 20190401 — Report Generated: 2020-09-03 16:06:24

STATE OF CALIFORNIA
Domestic Water Heating System
NRCC-PLB-E — CALIFORNIA ENERGY COMMISSION

CERTIFICATE OF COMPLIANCE		NRCC-PLB-E
Project Name:	CCC Willits - Administration Building	Report Page: (Page 5 of 7)
Project Address:		Date Prepared: 9/3/2020

H. DOMESTIC HOT WATER CONTROLS

This table is used to demonstrate compliance with control requirements in §110.3 for all occupancies. For high-rise residential and hotel/motel occupancies, compliance is also demonstrated with requirements in §150.1(c)8

	Yes	No	Not Applicable	Requirement
01	☒	☐	☐	Construction documents require manufacturer certification that service water-heating systems are equipped with automatic temperature controls capable of adjusting temperature settings per §110.3(a).
02	☐	☐	☒	Systems with capacity > 167,000 BTUH equipped with outlet temperature controls per §110.3(c)1 unless covered by California Plumbing Code §13.0.
03	☐	☐	☒	Controls for circulating pumps or electrical heat trace systems are capable of automatically turning off the system per §110.3(c)2 unless systems serves healthcare facility.
04	☐	☐	☒	For recirculation systems serving multiple dwelling units, design includes automatic pump controls per §150.1(c)8Bii, or §150.2 for additions or alterations.
05	☐	☐	☒	For recirculation systems serving individual dwelling units, design includes manual on/off controls as specified in Reference Appendix RA4.4.9 per §150.1(c)8.
06	☐	☐	☒	For replacement single heat pump water heaters serving individual dwelling units in climate zone 1-15, design includes communication interface that meets demand responsive control requirements of §110.12(a) per §150.2(b)1Hiii.

I. DECLARATION OF REQUIRED CERTIFICATES OF INSTALLATION

Selections have been made based on information provided in this document. If any selection have been changed by permit applicant, an explanation should be included in Table E. Additional Remarks. These documents must be provided to the building inspector during construction and can be found online at https://www.energy.ca.gov/title24/2019standards/2019_compliance_documents/Nonresidential_Documents/NRCI/

Yes	No	Form/Title	Field Inspector Pass	Field Inspector Fail
●	○	NRCI-PLB-01-E - Must be submitted for all buildings	☐	☐
○	●	NRCI-PLB-02-E - Must be submitted for high-rise residential and hotel/motel central hot water distribution systems to be recognized for compliance.	☐	☐
○	●	NRCI-PLB-03-E - Must be submitted for high-rise residential and hotel/motel single dwelling unit hot water distribution systems to be recognized for compliance.	☐	☐

Registration Number: — Registration Date/Time: — Registration Provider: Energysoft

CA Building Energy Efficiency Standards - 2019 Nonresidential Compliance — Report Version: 2019.0.001, Schema Version: rev 20190401 — Report Generated: 2020-09-03 16:06:24

STATE OF CALIFORNIA
Mechanical Systems
NRCC-MCH-E — CALIFORNIA ENERGY COMMISSION

CERTIFICATE OF COMPLIANCE		NRCC-MCH-E
Project Name:	CCC Willits - Administration Building	Report Page: (Page 12 of 12)
Project Address:		Date Prepared: 9/3/2020

DOCUMENTATION AUTHOR'S DECLARATION STATEMENT

I certify that this Certificate of Compliance documentation is accurate and complete.

Documentation Author Name: Jessica Hughey	Documentation Author Signature:
Company: Capital Engineering Consultants Inc.	Signature Date: 10/20/2020
Address: 11020 Sun Center Dr. Suite 100	CEA/ HERS Certification Identification (if applicable):
City/State/Zip: Rancho Cordova CA 95670	Phone: (916) 850-3500

RESPONSIBLE PERSON'S DECLARATION STATEMENT

I certify the following under penalty of perjury, under the laws of the State of California:

1. The information provided on this Certificate of Compliance is true and correct.
2. I am eligible under Division 3 of the Business and Professions Code to accept responsibility for the building design or system design identified on this Certificate of Compliance (responsible designer)
3. The energy features and performance specifications, materials, components, and manufactured devices for the building design or system design identified on this Certificate of Compliance conform to the requirements of Title 24, Part 1 and Part 6 of the California Code of Regulations.
4. The building design features or syste design features identified on this Certificate of Compliance are consistent with the information provided on other applicable compliance documents, worksheets, calculations, plans and specifications submitted to the enforcement agency for approval with this building permit application.
5. I will ensure that a completed signed copy of this Certificate of Compliance shall be made available with the building permit(s) issued for the building, and made available to the enforcement agency for all applicable inspections. I understand that a completed signed copy of this Certificate of Compliance is required to be included with the documentation the builder provides to the building owner at occupancy.

Responsible Designer Name: Kevin D. Stillman	Responsible Designer Signature:
Company: Capital Engineering Consultants, Inc.	Date Signed: 2020-09-03
Address: 11020 Sun Center Dr. Suite 100	License: M 33498
City/State/Zip: Rancho Cordova CA 95670	Phone:

Registration Number: — Registration Date/Time: — Registration Provider: Energysoft

CA Building Energy Efficiency Standards - 2019 Nonresidential Compliance — Report Version: 2019.0.001, Schema Version: rev 20190401 — Report Generated: 2020-09-03 16:06:24

STATE OF CALIFORNIA
Domestic Water Heating System
NRCC-PLB-E — CALIFORNIA ENERGY COMMISSION

CERTIFICATE OF COMPLIANCE		NRCC-PLB-E
Project Name:	CCC Willits - Administration Building	Report Page: (Page 3 of 7)
Project Address:		Date Prepared: 9/3/2020

F. DOMESTIC HOT WATER EQUIPMENT

This table is used to demonstrate compliance with mandatory equipment requirements in §110.1 and §110.3. For high-rise residential and hotel/motel occupancies, compliance with prescriptive requirements in §150.1(c)8 must also be demonstrated and with §150.2 for addition and alteration scopes.

Equipment Schedule: Individual Systems

01	02	03	04	05	06
Name or Item Tag	Equipment Type	Volume (gal)	Max GPM/ First Hour Rating (FHR)	Rated Uniform Energy Factor (UEF)	Minimum Required Uniform Energy Factor (UEF)[1]
Instantaneous Electric	Electric Storage	<=2	FHR >=75	0.98	0

[1] *FOOTNOTE: Compliant equipment may be found in the Modernized Appliance Efficiency Database System (MAEDBS) on the Energy Commission website: https://cacertappliances.energy.ca.gov/Pages/Search/AdvancedSearch.aspx*

Water Heating Equipment All Occupancies

	Yes	No	Not Applicable	Requirement
18	☐	☐	☒	Unfired storage tank insulation shall have Internal + External >=R-16 OR External >=R-12. Label required per §110.3(c)3
19	☐	☐	☒	New state buildings 60% of energy for service water heating from site solar energy or recovered energy per §110.3(c)5
20	☐	☐	☒	Isolation valves for instantaneous water heater with input rating <6.8 kBTUH or 2 kW has been specified per §110.3(c)6

Registration Number: — Registration Date/Time: — Registration Provider: Energysoft

CA Building Energy Efficiency Standards - 2019 Nonresidential Compliance — Report Version: 2019.0.001, Schema Version: rev 20190401 — Report Generated: 2020-09-03 16:06:24

STATE OF CALIFORNIA
Domestic Water Heating System
NRCC-PLB-E — CALIFORNIA ENERGY COMMISSION

CERTIFICATE OF COMPLIANCE		NRCC-PLB-E
Project Name:	CCC Willits - Administration Building	Report Page: (Page 6 of 7)
Project Address:		Date Prepared: 9/3/2020

J.DECLARATION OF REQUIRED CERTIFICATES OF ACCEPTANCE

There are no Certificates of Acceptance applicable to service water heating requirements.

K. DECLARATION OF REQUIRED CERTIFICATES OF VERIFICATION

Selections have been made based on information provided in this document. If any selection have been changed by permit applicant, an explanation should be included in Table E. Additional Remarks. These documents must be completed by a HERS Rater and provided to the building inspector during construction. The final documents must be created by a HERS Providers registry, but drafts can be found online at https://www.energy.ca.gov/title24/2019standards/2019_compliance_documents/Nonresidential_Documents/NRCI/

Yes	No	Form/Title	Field Inspector Pass	Field Inspector Fail
○	●	NRCV-PLB-21-H High-rise Residential Central Hot Water Distribution HERS Verification	☐	☐
○	●	NRCV-PLB-22-H High-rise Residential Individual Dwelling Unit Hot Water Distribution HERS Verification	☐	☐

Registration Number: — Registration Date/Time: — Registration Provider: Energysoft

CA Building Energy Efficiency Standards - 2019 Nonresidential Compliance — Report Version: 2019.0.001, Schema Version: rev 20190401 — Report Generated: 2020-09-03 16:06:24

IDENTIFICATION STAMP
DIV. OF THE STATE ARCHITECT
APP: 02-118630 INC:
REVIEWED FOR
SS ☐ FLS ☐ ACS ☑
DATE: 04/13/2021

OFFICE OF THE STATE FIRE MARSHAL
APPROVED FIRE AND PANIC ONLY
Approval of this plan does not authorize or approve any omission or deviation from applicable regulations. Final approval is subject to field inspection. One set of approved plans shall be available on the project site at all times.
PERMIT NO. 20-N-2332-CP
REVIEWED BY: LEO CAYAYLO, OSFM
DATE: 4/ /2021

DGS GENERAL SERVICES
Department of General Services
State of California
Real Estate Services Division
Project Management & Development Branch
707 Third Street, Suite 4-105
West Sacramento, California 95605

NICHOLS MELBURG & ROSSETTO ARCHITECTS + ENGINEERS
300 Knollcrest Drive
Redding, CA. 96002
(530) 222-3300 (530) 222-3538 FAX
http://www.nmrdesign.com

Copyright © 2019
All ideas, designs, arrangements and plans indicated or represented by this drawing are owned by, and the property of, NICHOLS, MELBURG and ROSSETTO and were created, evolved and developed for use on, and in conjunction with, the specified project. None of such ideas, designs, arrangements or plans shall be used by, or disclosed to any person, firm or corporation for any purpose whatsoever without the written permission of NICHOLS, MELBURG and ROSSETTO.

LICENSE STAMPS

REGISTERED PROFESSIONAL ENGINEER — Kevin D. Stillman — M 33498 — EXPIRES 8/30/22 — MECHANICAL — STATE OF CALIFORNIA
DATE SIGNED: 10-20-20

CONSULTANT

CAPITAL ENGINEERING CONSULTANTS, INC.
RANCHO CORDOVA, CALIFORNIA
JD - HC/JH — PM - DESIGN TEAM
181205.00 — PROJECT NO.

DRAWING STATUS
CONSTRUCTION DOCUMENTS

ISSUE

No.	Date	Description
1	10/22/2020	INITIAL PLAN REVIEW
2	01/22/2021	AGENCY RESUBMITTAL
3	03/22/2021	AGENCY RESUBMITTAL

If drawing is not 30" x 42" it is a reduced print

PROJECT
RESIDENTIAL CENTER, UKIAH: REPLACEMENT OF EXISTING RESIDENTIAL CENTER
440 EAST HILL ROAD
WILLITS, CALIFORNIA 95490
MENDOCINO COUNTY
CALIFORNIA CONSERVATION CORPS

Supervisor	Designed	Drawn
		Author

DSA Application No.
02-118630

SHEET TITLE
ADMINISTRATION BLDG TITLE 24 COMPLIANCE

DGS Project Number	NMR Project Number
00000000000001826	18-6456

Sheet Scale

Sheet Number
M402A

ISSUE DATE
July 9, 2021

Plot Date: 3/18/2021 1:33:36 PM
File Name: L:\Revit Local Files\CEC_DGS CCC Willits_Admin_MP18CECI_DGS CCC Willits_Admin_MP18_jduval.rvt

STATE OF CALIFORNIA

Domestic Water Heating System

NRCC-PLB-E — CALIFORNIA ENERGY COMMISSION

CERTIFICATE OF COMPLIANCE		**NRCC-PLB-E**
Project Name:	CCC Willits - Administration Building	**Report Page:** **(Page 7 of 7)**
Project Address:		**Date Prepared:** 9/3/2020

DOCUMENTATION AUTHOR'S DECLARATION STATEMENT

I certify that this Certificate of Compliance documentation is accurate and complete.

Documentation Author Name: Jessica Hughey	Documentation Author Signature:
Company: Capital Engineering Consultants Inc.	Signature Date: 10/20/2020
Address: 11020 Sun Center Dr. Suite 100	CEA/ HERS Certification Identification (if applicable):
City/State/Zip: Rancho Cordova CA 95670	Phone: (916) 850-3500

RESPONSIBLE PERSON'S DECLARATION STATEMENT

I certify the following under penalty of perjury, under the laws of the State of California:

1. The information provided on this Certificate of Compliance is true and correct.
2. I am eligible under Division 3 of the Business and Professions Code to accept responsibility for the building design or system design identified on this Certificate of Compliance (responsible designer)
3. The energy features and performance specifications, materials, components, and manufactured devices for the building design or system design identified on this Certificate of Compliance conform to the requirements of Title 24, Part 1 and Part 6 of the California Code of Regulations.
4. The building design features or system design features identified on this Certificate of Compliance are consistent with the information provided on other applicable compliance documents, worksheets, calculations, plans and specifications submitted to the enforcement agency for approval with this building permit application.
5. I will ensure that a completed signed copy of this Certificate of Compliance shall be made available with the building permit(s) issued for the building, and made available to the enforcement agency for all applicable inspections. I understand that a completed signed copy of this Certificate of Compliance is required to be included with the documentation the builder provides to the building owner at occupancy.

Responsible Designer Name: Kevin D. Stillman	Responsible Designer Signature:
Company: Capital Engineering Consultants, Inc.	Date Signed: 2020-09-03
Address: 11020 Sun Center Dr. Suite 100	License: M 33498
City/State/Zip: Rancho Cordova CA 95670	Phone:

Registration Number:

CA Building Energy Efficiency Standards - 2019 Nonresidential Compliance

Registration Date/Time:

Report Version: 2019.0.001
Schema Version: rev 20190401

Registration Provider: Energysoft

Report Generated: 2020-09-03 16:06:24

IDENTIFICATION STAMP
DIV. OF THE STATE ARCHITECT
APP: 02-118630 INC:
REVIEWED FOR
SS ☐ FLS ☐ ACS ☑
DATE: 04/13/2021

OFFICE OF THE STATE FIRE MARSHAL
APPROVED FIRE AND PANIC ONLY
Approval of this plan does not authorize or approve any omission or deviation from applicable regulations. Final approval is subject to field inspection. One set of approved plans shall be available on the project site at all times.
PERMIT NO. 20-N-2332-CP
REVIEWED BY: LEO CATAYLO, OSFM
DATE: 4/ /2021

GENERAL SERVICES
Department of General Services
State of California
Real Estate Services Division
Project Management & Development Branch
707 Third Street, Suite 4-105
West Sacramento, California 95605

NICHOLS MELBURG & ROSSETTO
ARCHITECTS + ENGINEERS
300 Knollcrest Drive
Redding, CA. 96002
(530) 222-3300 (530) 222-3538 FAX
http://www.nmrdesign.com

Copyright © 2019
All ideas, designs, arrangements and plans indicated or represented by this drawing are owned by, and the property of, NICHOLS, MELBURG and ROSSETTO and were created, evolved and developed for use on, and in conjunction with, the specified project. None of such ideas, designs, arrangements or plans shall be used by, or disclosed to any person, firm or corporation for any purpose whatsoever without the written permission of NICHOLS, MELBURG and ROSSETTO.

LICENSE STAMPS

REGISTERED PROFESSIONAL ENGINEER
M 33498
EXPIRES 9/30/22
MECHANICAL
STATE OF CALIFORNIA
DATE SIGNED: 10-20-20

CONSULTANT

CAPITAL
ENGINEERING CONSULTANTS, INC.
RANCHO CORDOVA, CALIFORNIA
JD - HC/JH — PM - DESIGN TEAM
181205.00 — PROJECT NO.

DRAWING STATUS
CONSTRUCTION DOCUMENTS

ISSUE

No.	Date	Description
1	10/22/2020	INITIAL PLAN REVIEW
2	01/22/2021	AGENCY RESUBMITTAL
3	03/22/2021	AGENCY RESUBMITTAL

If drawing is not 30" x 42" it is a reduced print

PROJECT
RESIDENTIAL CENTER, UKIAH: REPLACEMENT OF EXISTING RESIDENTIAL CENTER
440 EAST HILL ROAD
WILLITS, CALIFORNIA 95490
MENDOCINO COUNTY
CALIFORNIA CONSERVATION CORPS

Supervisor	Designed	Drawn
		Author

DSA Application No.
02-118630

SHEET TITLE
ADMINISTRATION BLDG TITLE 24 COMPLIANCE

DGS Project Number: 0000000000001826
NMR Project Number: 18-6456

Sheet Scale

Sheet Number
M403A

ISSUE DATE
July 9, 2021

Plot Date: 3/16/2021 1:13:28 PM
File Name: L:\Revit Local Files\CECI_DGS CCC Willits_Admin_MP18\CECI_DGS CCC Willits_Admin_MP18_jduval.rvt

REFRIGERANT CONCENTRATION CALC

SYSTEM	REFRIGERANT		DESIGN ROOM FLOOR AREA [SQ FT]	DESIGN ROOM CLG HEIGHT [FT]	DESIGN ROOM VOLUME [CU FT]	CONCENTRATION [LBS / 1000 CF]	
	TYPE	CHARGE [LBS]				DESIGN	LIMIT
HP/C-1	R-410A	25.8	341	10'-0"	3,410	7.6	26

NOTES:

1. DESIGN REFRIGERANT CHARGE IS CALCULATED USING BASIS OF DESIGN EQUIPMENT MANUFACTURER'S CATALOG DATA FOR FACTORY PRE-CHARGE AND ADDITIONAL CHARGE FOR ASSUMED LINE LENGTHS. INSTALLING CONTRACTOR SHALL PROVIDE UPDATED CALCULATIONS BASED ON ACTUAL REFRIGERANT CHARGE AND MAKE THEM AVAILABLE FOR REVIEW BY FIELD INSPECTOR OR OTHER AGENCIES.
2. CONCENTRATION LIMITS ARE TAKEN FROM 2019 CALIFORNIA MECHANICAL CODE TABLE 1102.3.

KEYNOTES:

1 PROVIDE WINDOW SENSOR AT OPERABLE WINDOW, FOR INTERLOCK WITH FAN COIL, SEE 1/M601.

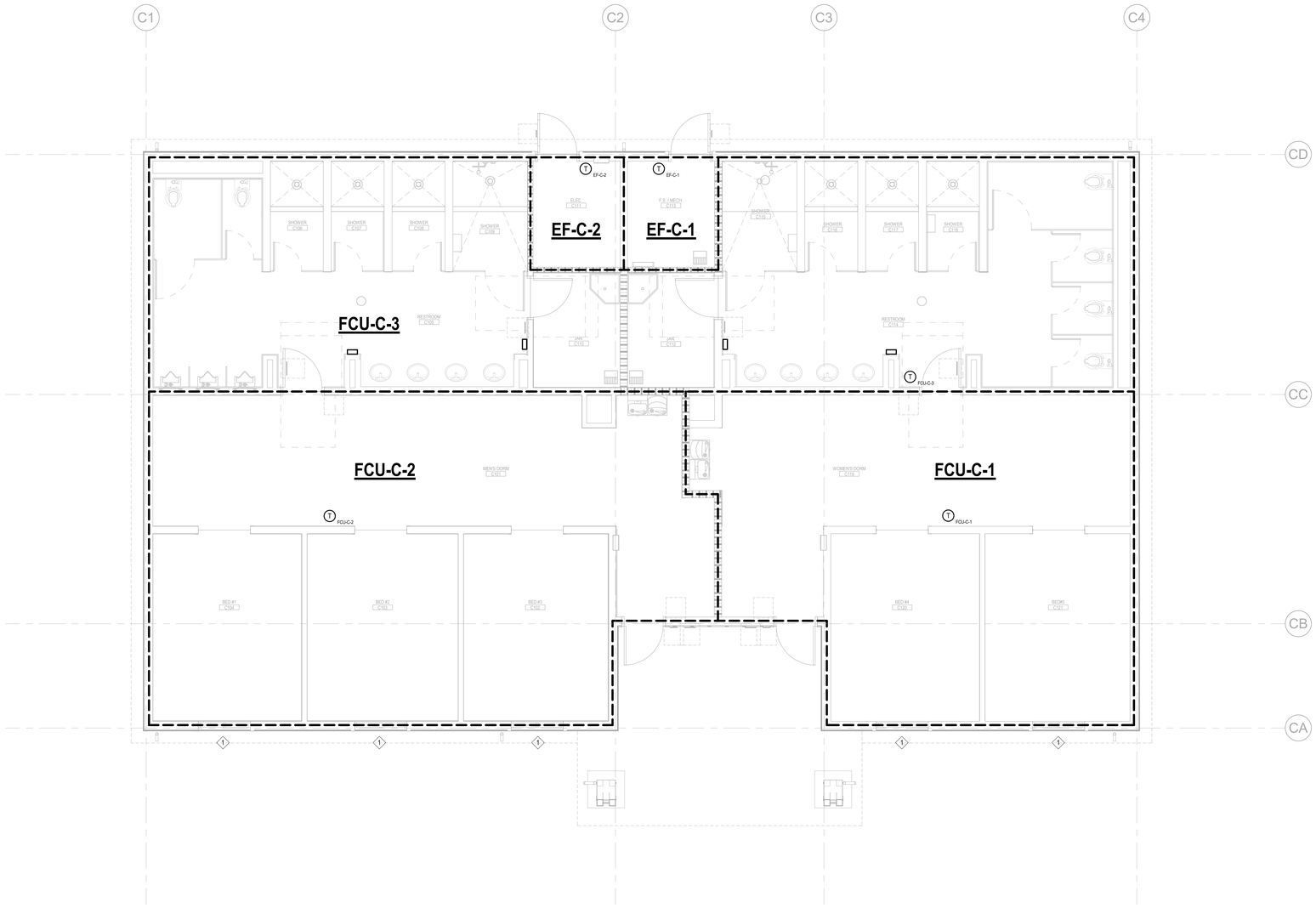

1 M101C COMET BLDG HVAC ZONE PLAN
SCALE: 1/4" = 1'-0"

IDENTIFICATION STAMP
DIV. OF THE STATE ARCHITECT
APP: 02-118630 INC:
REVIEWED FOR
SS ☐ FLS ☐ ACS ☑
DATE: 04/13/2021

OFFICE OF THE STATE FIRE MARSHAL
APPROVED FIRE AND PANIC ONLY
Approval of this plan does not authorize or approve any omission or deviation from applicable regulations. Final approval is subject to field inspection. One set of approved plans shall be available on the project site at all times.
PERMIT NO. 20-N-2332-CP
REVIEWED BY: LEO CATAYLO, OSFM
DATE: 4 / /2021

GENERAL SERVICES
Department of General Services
State of California
Real Estate Services Division
Project Management & Development Branch
707 Third Street, Suite 4-105
West Sacramento, California 95605

NICHOLS MELBURG & ROSSETTO
ARCHITECTS + ENGINEERS
300 Knollcrest Drive
Redding, CA. 96002
(530) 222-3300 (530) 222-3538 FAX
http://www.nmrdesign.com

Copyright © 2019
All ideas, designs, arrangements and plans indicated or represented by this drawing are owned by, and the property of, NICHOLS, MELBURG and ROSSETTO and were created, evolved and developed for use on, and in conjunction with, the specified project. None of such ideas, designs, arrangements or plans shall be used by, or disclosed to any person, firm or corporation for any purpose whatsoever without the written permission of NICHOLS, MELBURG and ROSSETTO

LICENSE STAMPS
REGISTERED PROFESSIONAL ENGINEER
KEVIN D. WHITE
M 33498
EXPIRES 9/30/22
MECHANICAL
STATE OF CALIFORNIA
DATE SIGNED: 10-20-20

CONSULTANT
CAPITAL
ENGINEERING CONSULTANTS, INC.
RANCHO CORDOVA, CALIFORNIA
JD - HCUH — PM - DESIGN TEAM
181205.00 — PROJECT NO.

DRAWING STATUS
CONSTRUCTION DOCUMENTS

ISSUE

No.	Date	Description
1	10/22/2020	INITIAL PLAN REVIEW
2	01/22/2021	AGENCY RESUBMITTAL
3	03/22/2021	AGENCY RESUBMITTAL

If drawing is not 30" x 42" it is a reduced print

PROJECT
RESIDENTIAL CENTER, UKIAH: REPLACEMENT OF EXISTING RESIDENTIAL CENTER
440 EAST HILL ROAD
WILLITS, CALIFORNIA 95490
MENDOCINO COUNTY
CALIFORNIA CONSERVATION CORP

Supervisor	Designed	Drawn
		Author

DSA Application No.
02-118630

SHEET TITLE
COMET BLDG HVAC ZONE PLAN

DGS Project Number: 0000000000001826
NMR Project Number: 18-6456

Reference North: NORTH
Sheet Scale: As indicated
Sheet Number: M101C

ISSUE DATE
July 9, 2021

Plot Date: 3/19/2021 1:29:39 PM
File Name: J:\Revit Local Files\HCD_DGS CCC Willits_Comet_MP18_Central_jdcuvalKTH47.rvt

SHEET NOTES:

1. SEE M001 FOR TABLE OF BRANCH DUCT SIZES TO INDIVIDUAL DIFFUSERS, GRILLES & REGISTERS. SIZE SUPPLY AND RETURN AIR DUCT PLENUMS ENTERING AND LEAVING FAN COILS TO MATCH SIZE OF DUCT CONNECTIONS AT FAN COILS. LINE DUCT AS INDICATED ON PLANS.
2. SEE 1/M501 FOR MOUNTING OF COMBINATION FIRE SMOKE DAMPERS.

KEY NOTES:

1. CONNECT 8"Ø DUCT TO WATER HEATER EXHAUST AIR OUTLET WITH MANUFACTURER'S DUCT KIT AND INSTALL MANUFACTURER'S BOOSTER FAN IN VERTICAL DUCT SECTION BELOW ROOF TERMINATION.
2. CONNECT 8"Ø DUCT TO WATER HEATER AIR INLET WITH MANUFACTURER'S DUCT KIT.
3. EXHAUST BRANCH SERVING SHOWER ROOM SHALL BE ALUMINUM CONSTRUCTION.
4. ELECTRICAL POWER METER, PROVIDED BY BAS CONTRACTOR. COORDINATE LOCATION AND INSTALLATION WITH DIV 26. SEE 2/M604 AND 1/M600.

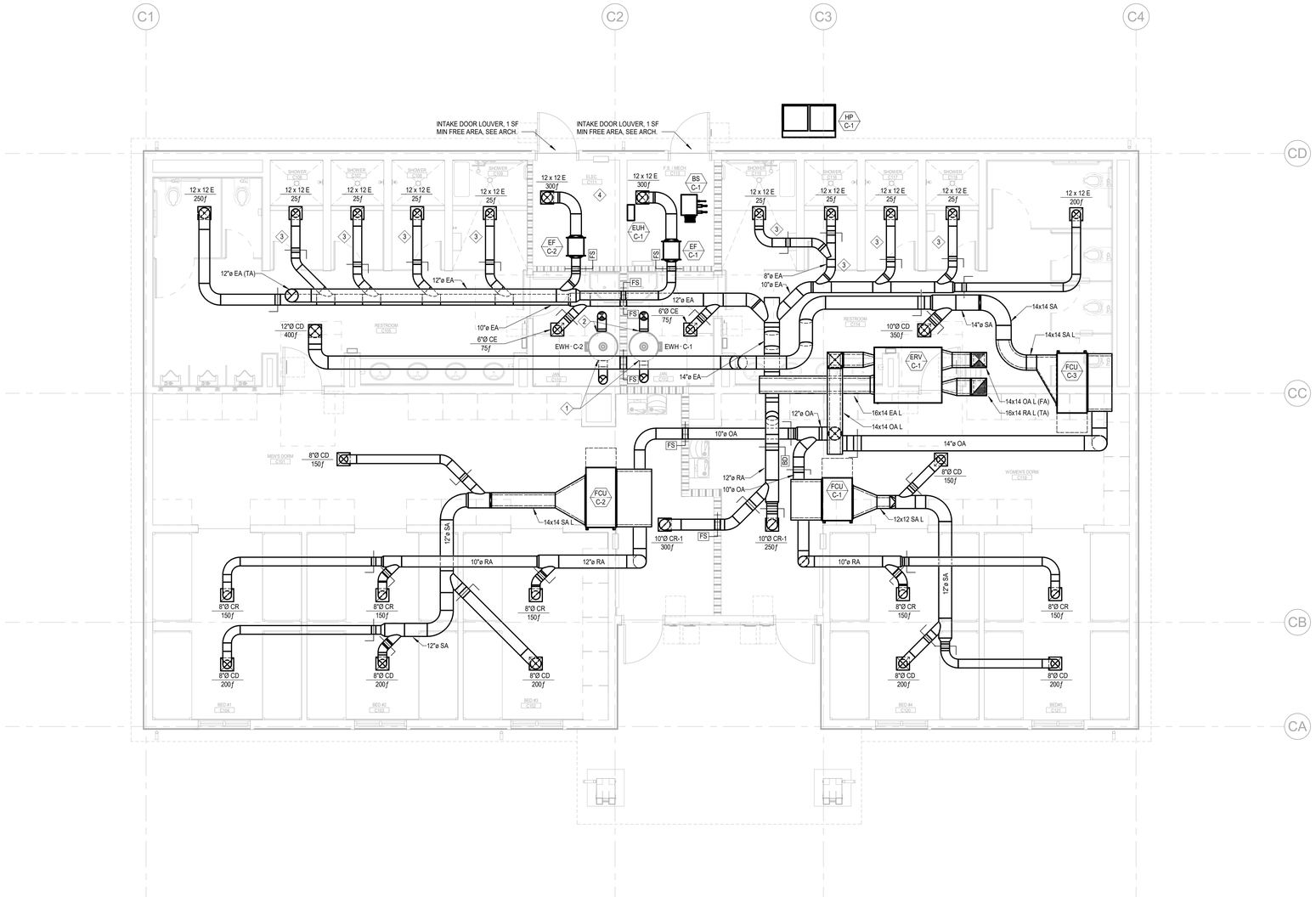

1 M201C COMET BLDG HVAC FLOOR PLAN

SCALE: 1/4" = 1'-0"

Plot Date: 3/10/2021 1:29:45 PM
File Name: L:\Revit Local Files\ECD_DGS CCC Willits_Comet_MP18_Central_jdurai\KTH47.rvt

IDENTIFICATION STAMP
DIV. OF THE STATE ARCHITECT
APP: 02-118630 INC:
REVIEWED FOR
SS ☐ FLS ☐ ACS ☑
DATE: 04/13/2021

OFFICE OF THE STATE FIRE MARSHAL
APPROVED FIRE AND PANIC ONLY
Approval of this plan does not authorize or approve any omission or deviation from applicable regulations. Final approval is subject to field inspection. One set of approved plans shall be available on the project site at all times.
PERMIT NO. 20-N-2332-CP
REVIEWED BY: LEO CATAYLO, OSFM
DATE: 4 / /2021

GENERAL SERVICES
Department of General Services
State of California
Real Estate Services Division
Project Management & Development Branch
707 Third Street, Suite 4-105
West Sacramento, California 95605

NICHOLS MELBURG & ROSSETTO ARCHITECTS + ENGINEERS
300 Knollcrest Drive
Redding, CA. 96002
(530) 222-3300 (530) 222-3538 FAX
http://www.nmrdesign.com

Copyright © 2019
All ideas, designs, arrangements and plans indicated or represented by this drawing are owned by, and the property of, NICHOLS, MELBURG and ROSSETTO and were created, evolved and developed for use on, and in conjunction with, the specified project. None of such ideas, designs, arrangements or plans shall be used by, or disclosed to any person, firm or corporation for any purpose whatsoever without the written permission of NICHOLS, MELBURG and ROSSETTO

LICENSE STAMPS

REGISTERED PROFESSIONAL ENGINEER KEVIN D. HOLT M 33498 EXPIRES 9/30/22 MECHANICAL STATE OF CALIFORNIA
DATE SIGNED: 10-20-20

CONSULTANT

CAPITAL
ENGINEERING CONSULTANTS, INC.
RANCHO CORDOVA, CALIFORNIA
JD - HC/JH — PM - DESIGN TEAM
181205.00 — PROJECT NO.

DRAWING STATUS
CONSTRUCTION DOCUMENTS

ISSUE

No.	Date	Description
1	10/22/2020	INITIAL PLAN REVIEW
2	01/22/2021	AGENCY RESUBMITTAL
3	03/22/2021	AGENCY RESUBMITTAL

If drawing is not 30" x 42" it is a reduced print

PROJECT
RESIDENTIAL CENTER, UKIAH: REPLACEMENT OF EXISTING RESIDENTIAL CENTER
440 EAST HILL ROAD
WILLITS, CALIFORNIA 95490
MENDOCINO COUNTY
CALIFORNIA CONSERVATION CORP

Supervisor	Designed	Drawn
		Author

DSA Application No.
02-118630

SHEET TITLE
COMET BLDG HVAC FLOOR PLAN

DGS Project Number	NMR Project Number
00000000001826	18-6456

Reference North: NORTH
Sheet Scale: 1/4" = 1'-0"
Sheet Number: M201C

ISSUE DATE
July 9, 2021

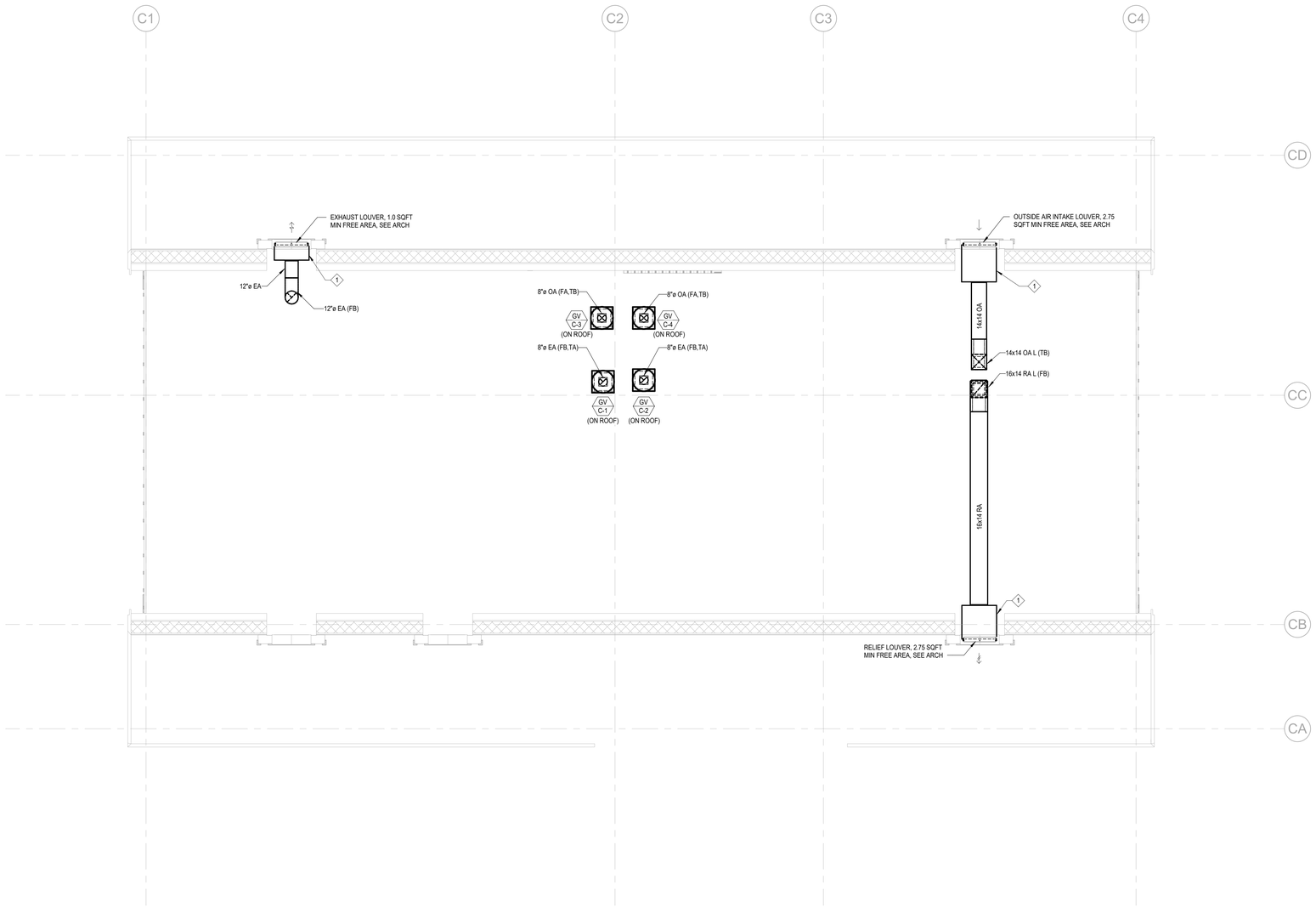

KEYNOTES:

1. PROVIDE DUCT PLENUM CONNECTION TO LOUVER. SIZED TO MATCH LOUVER DIMENSIONS.

1 M202C — COMET BLDG HVAC PLENUM PLAN

SCALE: 1/4" = 1'-0"

Plot Date: 3/18/2021 1:29:44 PM
File Name: L:\Revit Local Files\CEC_DGS CCC Willits_Comet_MP18_Central_jdvoit\KTH47.rvt

IDENTIFICATION STAMP
DIV. OF THE STATE ARCHITECT
APP: 02-118630 INC:
REVIEWED FOR
SS ☐ FLS ☐ ACS ☑
DATE: 04/13/2021

OFFICE OF THE STATE FIRE MARSHAL
APPROVED FIRE AND PANIC ONLY
Approval of this plan does not authorize or approve any omission or deviation from applicable regulations. Final approval is subject to field inspection. One set of approved plans shall be available on the project site at all times.
PERMIT NO: 20-N-2332-CP
REVIEWED BY: LEO CATAYLO, OSFM
DATE: 4 / 1 /2021

DGS GENERAL SERVICES
Department of General Services
State of California
Real Estate Services Division
Project Management & Development Branch
707 Third Street, Suite 4-105
West Sacramento, California 95605

NICHOLS MELBURG & ROSSETTO
ARCHITECTS + ENGINEERS
300 Knollcrest Drive
Redding, CA. 96002
(530) 222-3300 (530) 222-3538 FAX
http://www.nmrdesign.com

Copyright © 2019
All ideas, designs, arrangements and plans indicated or represented by this drawing are owned by, and the property of, NICHOLS, MELBURG and ROSSETTO and were created, evolved and developed for use on, and in conjunction with, the specified project. None of such ideas, designs, arrangements or plans shall be used by, or disclosed to any person, firm or corporation for any purpose whatsoever without the written permission of NICHOLS, MELBURG and ROSSETTO.

LICENSE STAMPS

REGISTERED PROFESSIONAL ENGINEER — M 33498 — EXPIRES 9/30/22 — MECHANICAL — STATE OF CALIFORNIA
DATE SIGNED: 10-20-20

CONSULTANT

CAPITAL ENGINEERING CONSULTANTS, INC.
RANCHO CORDOVA, CALIFORNIA
JD - HCJH — PM - DESIGN TEAM
181205.00 — PROJECT NO.

DRAWING STATUS
CONSTRUCTION DOCUMENTS

ISSUE

No.	Date	Description
1	10/22/2020	INITIAL PLAN REVIEW
2	01/22/2021	AGENCY RESUBMITTAL
3	03/22/2021	AGENCY RESUBMITTAL

If drawing is not 30" x 42" it is a reduced print

PROJECT
RESIDENTIAL CENTER, UKIAH: REPLACEMENT OF EXISTING RESIDENTIAL CENTER
440 EAST HILL ROAD
WILLITS, CALIFORNIA 95490
MENDOCINO COUNTY
CALIFORNIA CONSERVATION CORP

Supervisor	Designed	Drawn
		Author

DSA Application No.
02-118630

SHEET TITLE
COMET BLDG HVAC PLENUM PLAN

DGS Project Number: 000000000001826
NMR Project Number: 18-6456

Reference North: NORTH
Sheet Scale: 1/4" = 1'-0"
Sheet Number: M202C

ISSUE DATE
July 9, 2021

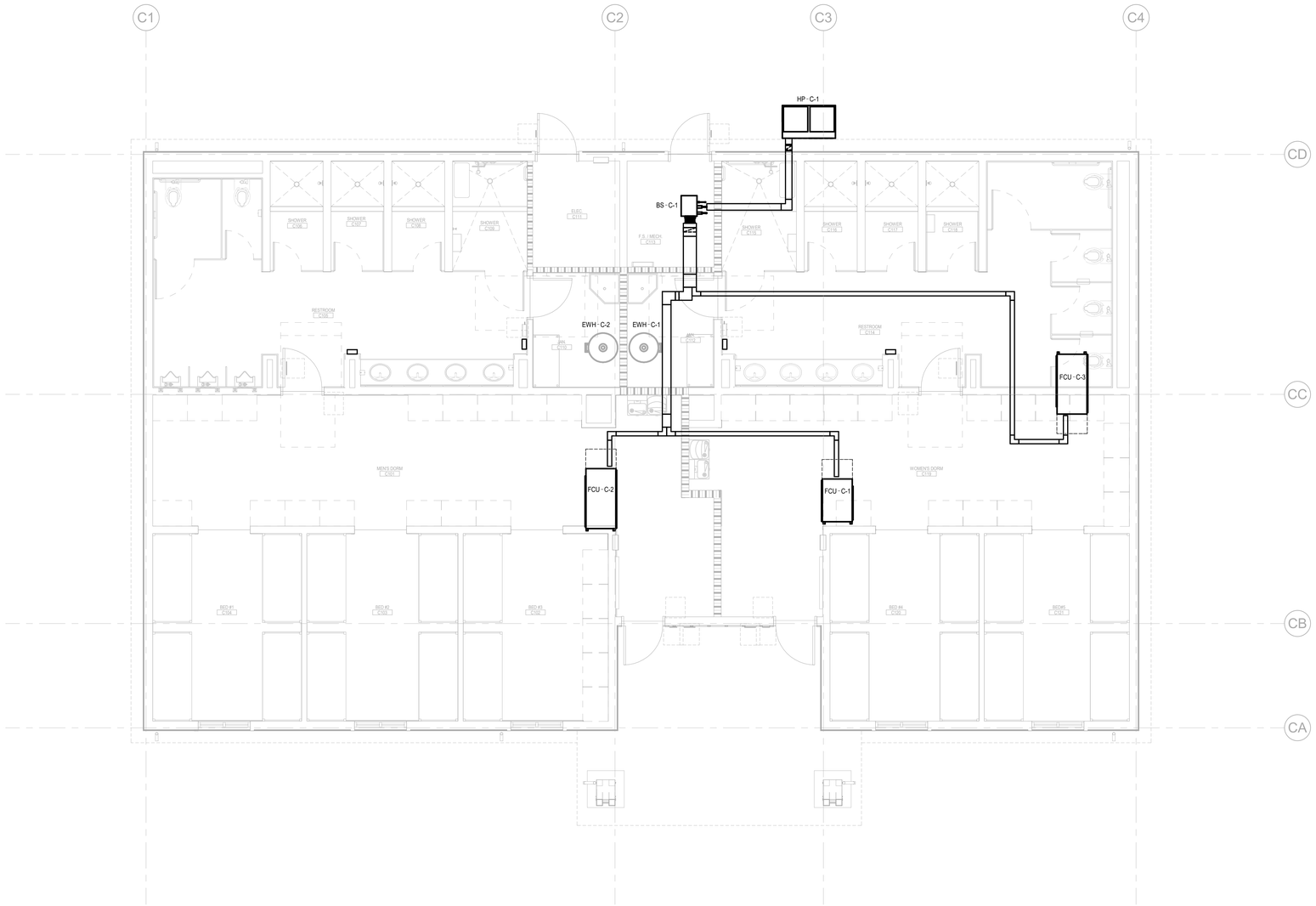

SHEET NOTES:

1. SEE SIM400 FOR VRF REFRIGERANT PIPING DIAGRAM & SIZES.
2. INDIVIDUAL REFRIGERANT PIPES ARE NOT MODELED. RECTANGULAR SHAPES ON FLOOR PLAN INDICATE PIPE GROUPINGS WITH MULTIPLE REFRIGERANT PIPES ROUTED TOGETHER. SHOWN FOR SPACE COORDINATION AND NOT TO REPRESENT ANY PIPING ENCLOSURE.

1 M301C — COMET BLDG HVAC PIPING FLOOR PLAN

SCALE: 1/4" = 1'-0"

Plot Date: 3/19/2021 1:29:46 PM
File Name: L:\Revit Local Files\EECI_DGS CCC Willits_Comet_MP18_Central_jduval\KTH47.rvt

IDENTIFICATION STAMP
DIV. OF THE STATE ARCHITECT
APP: 02-118630 INC:
REVIEWED FOR
SS ☐ FLS ☐ ACS ☑
DATE: 04/13/2021

OFFICE OF THE STATE FIRE MARSHAL
APPROVED FIRE AND PANIC ONLY
Approval of this plan does not authorize or approve any omission or deviation from applicable regulations. Final approval is subject to field inspection. One set of approved plans shall be available on the project site at all times.
PERMIT NO. 20-N-2332-CP
REVIEWED BY: LEO CATAYLO, OSFM
DATE: 4 / /2021

GENERAL SERVICES
Department of General Services
State of California
Real Estate Services Division
Project Management & Development Branch
707 Third Street, Suite 4-105
West Sacramento, California 95605

NICHOLS MELBURG & ROSSETTO
ARCHITECTS + ENGINEERS
300 Knollcrest Drive
Redding, CA. 96002
(530) 222-3300 (530) 222-3538 FAX
http://www.nmrdesign.com

Copyright © 2019
All ideas, designs, arrangements and plans indicated or represented by this drawing are owned by, and the property of, NICHOLS, MELBURG and ROSSETTO and were created, evolved and developed for use on, and in conjunction with, the specified project. None of such ideas, designs, arrangements or plans shall be used by, or disclosed to any person, firm or corporation for any purpose whatsoever without the written permission of NICHOLS, MELBURG and ROSSETTO.

LICENSE STAMPS

REGISTERED PROFESSIONAL ENGINEER — KRISTOPHER T. HAMM — M 33498 — EXPIRES 9/30/22 — MECHANICAL — STATE OF CALIFORNIA
DATE SIGNED: 12-22-20

CONSULTANT

CAPITAL
ENGINEERING CONSULTANTS, INC.
RANCHO CORDOVA, CALIFORNIA
JD - HC/JH — PM - DESIGN TEAM
181205.00 — PROJECT NO.

DRAWING STATUS
CONSTRUCTION DOCUMENTS

ISSUE

No.	Date	Description
1	10/22/2020	INITIAL PLAN REVIEW
2	01/22/2021	AGENCY RESUBMITTAL
3	03/22/2021	AGENCY RESUBMITTAL

If drawing is not 30" x 42" it is a reduced print

PROJECT
RESIDENTIAL CENTER, UKIAH: REPLACEMENT OF EXISTING RESIDENTIAL CENTER
440 EAST HILL ROAD
WILLITS, CALIFORNIA 95490
MENDOCINO COUNTY
CALIFORNIA CONSERVATION CORP

Supervisor	Designed	Drawn
		Author

DSA Application No.
02-118630

SHEET TITLE
COMET BLDG HVAC PIPING FLOOR PLAN

DGS Project Number	NMR Project Number
0000000000001826	18-6456

Reference North — NORTH
Sheet Scale: 1/4" = 1'-0"
Sheet Number: M301C

ISSUE DATE
July 9, 2021

CERTIFICATE OF COMPLIANCE			NRCC-MCH-E
This document is used to demonstrate compliance for mechanical systems that are within the scope of the permit application and are demonstrating compliance using the prescriptive path outlined in §140.4, or §141.0(b)2 for alterations .			
Project Name:	CCC Willits - Comet Building	**Report Page:**	**(Page 1 of 10)**
Project Address:		**Date Prepared:**	9/3/2020

A. GENERAL INFORMATION

01	Project Location (city)	Willits	04	Total Conditioned Floor Area	2738
02	Climate Zone	2	05	Total Unconditioned Floor Area	110
03	Occupancy Types Within Project:		06	# of Stories (Habitable Above Grade)	1
☐ Office (B)		☐ Retail (M)	☐ Non-refrigerated Warehouse (S)		
☐ Hotel/ Motel Guest Rooms (R-1)		☐ School (E)	☐ Healthcare Facility (H)		
☒ High-Rise Residential (R-2/R-3)		☐ Relocatable Class Bldg (E)	☒ Other (write in)		See Table J

B. PROJECT SCOPE

This table Includes mechanical systems or components that are within the scope of the permit application and are demonstrating compliance using the prescriptive path outlined in §140.4, or §141.0(b)2 for alterations .

01	02	03
Air System(s)	Wet System Components	Dry System Components
☒ Heating Air System	☐ Water Economizer	☐ Air Economizer
☒ Cooling Air System	☐ Pumps	☐ Electric Resistance Heat
Mechanical Controls	☐ System Piping	☒ Fan Systems
☒ Mechanical Controls	☐ Cooling Towers	☐ Ductwork
	☐ Chillers	☒ Ventilation
	☐ Boilers	☐ Zonal Systems/ Terminal Boxes

CERTIFICATE OF COMPLIANCE			NRCC-MCH-E
Project Name:	CCC Willits - Comet Building	**Report Page:**	**(Page 2 of 10)**
Project Address:		**Date Prepared:**	9/3/2020

C. COMPLIANCE RESULTS

Table C will indicate if the project data input into the compliance document is compliant with mechanical requirements. This table is not editable by the user. If this table says "DOES NOT COMPLY" or "COMPLIES with Exceptional Conditions" refer to Table D., or the table indicated as not compliant for guidance.

01		02		03		04		05		06		07		08	09
System Summary §110.1, §110.2, §140.4	AND	Pumps §140.4(k)	AND	Fans/ Economizers §140.4(c), §140.4(e)	AND	System Controls §110.2, §120.2, §140.4(f)	AND	Ventilation §120.1	AND	Terminal Box Controls §140.4(d)	AND	Distribution §120.3, §140.4(l)	AND	Cooling Towers §110.2(e)2	Compliance Results
(See Table F)		(See Table G)		(See Table H)		(See Table I)		(See Table J)		(See Table K)		(See Table L)		(See Table M)	
Yes	AND		AND	Yes	AND	Yes	AND	Yes	AND		AND		AND		COMPLIES
Mandatory Measures Compliance (See Table Q for Details)										COMPLIES					

D. EXCEPTIONAL CONDITIONS

This table is auto-filled with uneditable comments because of selections made or data entered in tables throughout the form.

E. ADDITIONAL REMARKS

This table includes remarks made by the permit applicant to the Authority Having Jurisdiction.

CERTIFICATE OF COMPLIANCE			NRCC-MCH-E
Project Name:	CCC Willits - Comet Building	**Report Page:**	**(Page 3 of 10)**
Project Address:		**Date Prepared:**	9/3/2020

F. HVAC SYSTEM SUMMARY (DRY & WET SYSTEMS)

This table is used to demonstrate compliance for mechanical equipment with mandatory requirements found in §110.1 and §110.2(a) and prescriptive requirements found in §140.4(a), §140.4(b) and §140.4(k) or §141.0(b)2 for alterations.

Dry System Equipment Sizing (includes air conditioners, condensers, heat pumps, VRF, furnaces and unit heaters)

01	02	03	04	05	06	07	08	09	10	11
Name or Item Tag	Equipment Category per Tables 110.2	Equipment Type per Tables 110.2 & Title 20	Smallest Size Available[1] §140.4(a)	Equipment Sizing per Mechanical Schedule (Btu/h) §140.4 (a&b)						
				Heating Output[2,3]			Cooling Output[2,3]		Load Calculations[3,4]	
				Per Design (kBtu/h)	Rated (kBtu/h)	Supp. Heating Output (kBtu/h)	Sensible Per Design (kBtu/h)	Rated (kBtu/h)	Total Heating Load	Total Sensible Cooling Load
HP-C-1	Variable Refrigerant Flow	VRF heat pump, air cooled	Yes	59440	74693	0	66877	70276	22283	25228

[1]FOOTNOTES: Equipment shall be the smallest size, within the available options of the desired equipment line, necessary to meet the design heating and cooling loads of the building per §140.4(a). Healthcare facilities are excepted.

[2]It is common practice to show rated output capacity on the equipment schedule. Sensible cooling output comes from specification sheet tables.

[3] If equipment is heating only, leave cooling output and load blank. If equipment is cooling only, leave heating output and load blank.

[4] Authority Having Jurisdiction may ask for load calculations used for compliance per §140.4(b).

Dry System Equipment Efficiency (other than Package Terminal Air Conditioners (PTAC) and Package Terminal Heat Pumps (PTHP))

01	02	03	04	05	06	07	08	09
		Heating Mode				Cooling Mode		
Name or Item Tag	Size Category (Btu/h)	Rating Condition (°F)	Efficiency Unit	Minimum Efficiency Required per Tables 110.2 / Title 20	Design Efficiency	Efficiency Unit	Minimum Efficiency Required per Tables 110.2 / Title 20	Design Efficiency
HP-C-1	65,000 and 135,000	47 Fdb/ 43 Fwb OSA	COP	3.3	3.7	EER IEER	11.0 14.6	13.9 12.3

G. PUMPS

This section does not apply to this project.

CERTIFICATE OF COMPLIANCE			NRCC-MCH-E
Project Name:	CCC Willits - Comet Building	**Report Page:**	**(Page 4 of 10)**
Project Address:		**Date Prepared:**	9/3/2020

H. FAN SYSTEMS & AIR ECONOMIZERS

This table is used to demonstrate compliance with prescriptive requirements found in §140.4(c), §140.4(e) and §140.4(m) for fan systems. Fan systems serving healthcare facilities, or those serving only process loads, are exempt from these requirements and do not need to be included in Table H.

System Name:	HP-C-1	**Economizer:[1]**	Differential Temperature	**Economizer Controls:**	Designed per and (m)	**System Fan Type:**	Fixed Flow
01	02	03	04	05	06	07	08
Fan Name or Item Tag	Fan Function	Qty	Maximum Design Supply Airflow (CFM)	HP Unit[2]	Design HP	Fan Power Pressure Drop Adjustment - Table 140.4-B: Device	Design Airflow through Device (CFM)
VRF	Other (Transfer, VAV box)	1	2050	BHP	0.03		
VRF	Other (Transfer, VAV box)	1	0	BHP	0.04		
VRF	Other (Transfer, VAV box)	1	0	BHP	0.04		
Total System Design Supply Airflow (CFM):			2050	Total System Design (B)HP:	0.11	**Maximum System Fan Power (B)HP:**	0

[1] FOOTNOTES: Computer room economizers must meet requirements of §140.9(a) and will be documented on the NRCC-PRC-E document.

[2] If total filter pressure drop (SPa) is greater than 1 in WC, or 245 Pascal then enter it and total fan pressure drop across the fan (SPf) for system.

I. SYSTEM CONTROLS

This table is used to demonstrate compliance with mandatory controls in §110.2 and §120.2 and prescriptive controls in §140.4(f) and (n) or requirements in §141.0(b)2E for altered space conditioning systems.

01	02	03	04	05	06	07	08	09
System Name	System Zoning	Conditioned Floor Area Being Served (ft²)	Thermostats §110.2(b) & (c)[1], §120.2(a)or §141.0(b)2E	Shut-Off Controls §120.2(c)	Isolation Zone Controls §120.2(g)	Demand Response §120.2(b)	Supply Air Temp. Reset §140.4(f)	Window Interlocks per §140.4(n)
HP-C-1	Multi-zone w/ DDC to zone	<= 25,000 ft²	Setback	Auto Timer Switch	4 Hour Timer	EMCS	Included	Provided

[1]FOOTNOTES: Gravity gas wall heaters, gravity floor heaters, gravity room heaters, non-central electric heaters, fireplaces or decorative gas appliances, wood stoves are not required to have setback thermostats.

CERTIFICATE OF COMPLIANCE			NRCC-MCH-E
Project Name:	CCC Willits - Comet Building	**Report Page:**	**(Page 5 of 10)**
Project Address:		**Date Prepared:**	9/3/2020

I. SYSTEM CONTROLS

*Notes: Controls with a * require a note in the space below explaining how compliance is achieved. EX: system 1: SA Temp Reset: Exempt because zones compliant with §140.4(d) ; EXCEPTION 1 to §140.4(f)

J. VENTILATION AND INDOOR AIR QUALITY

This table is used to demonstrate compliance with mandatory ventilation requirements in §120.1 and §120.2(e)3B for all nonresidential, high-rise residential and hotel/motel occupancies. For alterations, only ventialtion systems being altered within the scope of the permit application need to be documented in this table. In lieu of this table, the required outdoor ventilation rates and airflows may be shown on the plans or the calculations can be presented in a spreadsheet.

01	☐	Check the box if the project is showing ventilation calculations on the plans, or attaching the calculations instead of completing this table.
02	☒	Check this box if the project included new or altered high-rise residential dwelling units.
03	☐	Check the box if the project is using natural ventilation in any nonresidential or hotel/motel spaces to meet required ventilation rates per §120.1(c)2.

Nonresidential and Hotel/ Motel Ventilation Systems

04		05		06		07
System Name	HP-C-1	System Design OA CFM Airflow[1]	80.1	System Design Transfer Air CFM	0	Air Filtration per §120.1(c) and §141.0(b)2 [2]: Provided per §120.1(c) (NR and Hotel/Motel))

08	09	10	11	12	13	14	15	16	
Space Name ot item Tag	Mechanical Ventilation Required per §120.1(c)3 [3]: Occupancy Type[4]	Conditioned Floor Area (ft²)	# of Shower heads/ toilets	# of people[5]	Required Min OA CFM	Exh. Vent per §120.1(c)4: Required Min CFM	Provided per Design CFM	DCV or Sensor Controls per §120.1(d)3, §120.1(d)5, and §120.1(e)3 [6]	
FCU-C-3	Toilet, public	1068			0	0	0	DCV	NA: Not required per §120.1(d)3
								Occ Sensor	

[1] FOOTNOTES: System CFM should include both mechanical and natural ventilation for the zone/system

[2] Air filtration requirements apply to the following three system types per §120.1(c)1A : space conditioning systems utilizing ducts to supply air to occupiable space; supply-only ventilation systems providing outside air to occupiable space; supply side of balanced ventilation systems including heat recovery and energy recovery ventilation systems providing outside air to occupiable space.

[3] Uniform Mechanical Code may have more stringent ventilation requirements; the most stringent code requirement takes precedence.

[4] See Standards Tables 120.1-A and 120.1-B.

CERTIFICATE OF COMPLIANCE			NRCC-MCH-E
Project Name:	CCC Willits - Comet Building	**Report Page:**	**(Page 6 of 10)**
Project Address:		**Date Prepared:**	9/3/2020

J. VENTILATION AND INDOOR AIR QUALITY

[5] For lecture halls with fixed seating, the expected number of occupants shall be shall be determined in accordance with the California Building Code.

[6] §120.2(e)3 requires systems serving rooms that are required by §130.1(c) to have lighting occupancy sensing controls to also have occupancy sensing zone controls for ventilation. Examples of spaces which require lighting occupancy sensors include offices 250ft² or smaller, multipurpose rooms less than 1,000 ft², classrooms, conference rooms, restrooms, aisles and open areas in warehouses, library book stack aisles, corridors, stairwells, parking garages, and loading and unloading zones, unless excepted by §130.1(c).

High-rise Residential Dwelling Unit Ventilation Systems

19	20	21	22	23	24	25	26		27
Space Name ot Item Tag	Mechanical Ventilation Required per §120.1(b): Conditioned Floor Area (ft²)	# of Bedrooms	# of Dwelling Units	Required Min OA CFM[1]	Ventilation per Design: Supply Air CFM	Exhaust CFM	Local Exhaust		Air Filtration per §120.1(b) [3]
FCU-C-1	711	1	1	36.3	0	0	☒	Bathroom IAQ	Provided per
							☒	Bathroom IAQ and Vent.	
							☒	Kitchen Range Hood[2]	
FCU-C-2	959	1	1	43.8	0	0	☒	Bathroom IAQ	Provided per
							☒	Bathroom IAQ and Vent.	
							☒	Kitchen Range Hood[2]	
28	Is this a balanced system[4]			No	29	Meeting Outside Air Requirements?			Yes

[1] FOOTNOTES: Uniform Mechanical Code may have more stringent ventilation requirements; the most stringent code requirement takes precedence.

[2] Kitchen range hood will be verified per NA7.18.1 to confirm model is rated by HVI.

[3] Air filtration requirements apply to the following three system types per §120.1(c)1A : space conditioning systems utilizing ducts to supply air to occupiable space; supply-only ventilation systems providing outside air to occupiable space; supply side of balanced ventilation systems including heat recovery and energy recovery ventilation systems providing outside air to occupiable space.

[4] A balanced ventilation system provides ventilation airflow to each dwelling-unit at a rate equal to or greater than the required minimum rate, but not more than twenty percent.

K. TERMINAL BOX CONTROLS

This section does not apply to this project.

CERTIFICATE OF COMPLIANCE			NRCC-MCH-E
Project Name:	CCC Willits - Comet Building	**Report Page:**	**(Page 7 of 10)**
Project Address:		**Date Prepared:**	9/3/2020

L. DISTRIBUTION (DUCTWORK and PIPING)

This section does not apply to this project.

M. COOLING TOWERS

This section does not apply to this project.

N. DECLARATION OF REQUIRED CERTIFICATES OF INSTALLATION

Selections have been made based on information provided in previous tables of this document. If any selection needs to be changed, please explain why in Table E Additional Remarks. These documents must be provided to the building inspector during construction and can be found online at https://www.energy.ca.gov/title24/2019standards/2019_compliance_documents/Nonresidential_Documents/NRCI/

Yes	No	Form/Title	Field Inspector: Pass	Fail
●	○	NRCI-MCH-01-E - Must be submitted for all buildings	☐	☐

CERTIFICATE OF COMPLIANCE			NRCC-MCH-E
Project Name:	CCC Willits - Comet Building	**Report Page:**	**(Page 8 of 10)**
Project Address:		**Date Prepared:**	9/3/2020

O. DECLARATION OF REQUIRED CERTIFICATES OF ACCEPTANCE

Selections have been made based on information provided in previous tables of this document. If any selection needs to be changed, please explain why in Table E Additional Remarks. These documents must be provided to the building inspector during construction and can be found online at https://www.energy.ca.gov/title24/2019standards/2019_compliance_documents/Nonresidential_Documents/NRCA/

Yes	No	Form/Title	Field Inspector: Pass	Fail
●	○	NRCA-MCH-02-A - Outdoor Air must be submitted for all newly installed HVAC units. Note: MCH-02-A can be performed in conjunction with MCH-07-A Supply Fan VFD Acceptance (if applicable) since testing activities overlap.	☐	☐
○	●	NRCA-MCH-03-A - Constant Volume Single Zone HVAC NOTE: This form does not automatically move to 'Yes'. If Constant Volume Single Zone HVAC Systems are included in the scope, permit applicant should move this form to "Yes".	☐	☐
○	●	NRCA-MCH-04-A - Air Distribution Duct Leakage	☐	☐
○	●	NRCA-MCH-05-A - Air Economizer Controls	☐	☐
○	●	NRCA-MCH-06-A Demand Control Ventilation Systems must be submitted for all systems required to employ demand controlled ventilation (refer to §120.1(c)3) can vary outside ventilation flow rates based on maintaining interior carbon dioxide (CO_2) concentration setpoints.	☐	☐
○	●	NRCA-MCH-07-A Supply Fan Variable Flow Controls	☐	☐
○	●	NRCA-MCH-08-A Valve Leakage Test	☐	☐
○	●	NRCA-MCH-09-A Supply Water Temperature Reset Controls	☐	☐
○	●	NRCA-MCH-10-A Hydronic System Variable Flow Controls	☐	☐
●	○	NRCA-MCH-11-A Automatic Demand Shed Controls	☐	☐
○	●	NRCA-MCH-12-A FDD for Packaged Direct Expansion Units	☐	☐
○	●	NRCA-MCH-13-A Automatic FDD for Air Handling Units and Zone Terminal Units Acceptance	☐	☐
○	●	NRCA-MCH-14-A Distributed Energy Storage DX AC Systems Acceptance NOTE: This form does not automatically move to "Yes". If Distributed Energy System DX AC Systems are included in teh scope permit applicant should move this form to "Yes".	☐	☐
○	●	NRCA-MCH-15-A Thermal Energy Storage (TES) System Acceptance NOTE: This form does not automatically move to "Yes". If Chilled water Storage, Ice-on-Coil Internal Melt, Ice-on-Coil External melt, Ice Harvester, Brine, Ice-Slurry, Eutecti Salt, Clathrate Hydrate Slurry (CHS), Cryogenic or Encapsulated (Ice Ball) Systems are included in the scope, permit applicant should move this form to 'Yes".	☐	☐
○	●	NRCA-MCH-16-A Supply Air Temperature Reset Controls	☐	☐
○	●	NRCA-MCH-17-A Condenser Water Temperature Reset Controls	☐	☐
○	●	NRCA-MCH-18-A Energy Management Control Systems	☐	☐

CERTIFICATE OF COMPLIANCE			NRCC-MCH-E
Project Name:	CCC Willits - Comet Building	**Report Page:**	**(Page 9 of 10)**
Project Address:		**Date Prepared:**	9/3/2020

O. DECLARATION OF REQUIRED CERTIFICATES OF ACCEPTANCE

Yes	No	Form/Title	Pass	Fail
○	●	NRCA-MCH-19-A Occupancy Sensor Controls	☐	☐
●	○	NRCA-MCH-20 Multi-Family Ventilation	☐	☐
●	○	NRCA-MCH-21 Multi-Family Envelope Leakage	☐	☐

P. DECLARATION OF REQUIRED CERTIFICATES OF VERIFICATION

Selections have been made based on information provided in previous tables of this document. If any selection needs to be changed, please explain why in Table E Additional Remarks. These documents must be completed by a HERS Rater and provided to the building inspector during construction. The finsl documents must be creted by a HERS Providrs registry, but drafts can be found online at https://www.energy.ca.gov/title24/2019standards/2019_compliance_documents/Nonresidential_Documents/NRCV/

Yes	No	Form/Title	Field Inspector: Pass	Fail
○	●	NRCV-MCH-04-H Duct Leakaage Test *NOTE: Must be completed by a HERS Rater*	☐	☐
●	○	NRCV-MCH-24 Enclosure Air Leakaage Worksheet *NOTE: Must be completed by a HERS Rater*	☐	☐
●	○	NRCV-MCH-27 High-rise Resdential *NOTE: Must be completed by a HERS Rater*	☐	☐
●	○	NRCV-MCH-32 Local Mechanical Exhaust *NOTE: Must be completed by a HERS Rater*	☐	☐

Q. MANDATORY MEASURES DOCUMENTATION LOCATION

This table is used to indicate where mandatory measures are documented in the plan set or construction documentation.

01		02
Compliance with Mandatory Measures documented through MCH Mandatory Measures Note Block[1]	Yes	Plan sheet or construction document location: M-Sheets

IDENTIFICATION STAMP
DIV. OF THE STATE ARCHITECT
APP: 02-118630 INC:
REVIEWED FOR
SS ☐ FLS ☐ ACS ☑
DATE: 04/13/2021

OFFICE OF THE STATE FIRE MARSHAL
APPROVED FIRE AND PANIC ONLY
Approval of this plan does not authorize or approve any omission or deviation from applicable regulations. Final approval is subject to field inspection. One set of approved plans shall be available on the project site at all times.
PERMIT NO.: 20-N-2332-CP
REVIEWED BY: LITO CATAYLO, OSFM
DATE: 3/ 1 /2021

DGS
GENERAL SERVICES
Department of General Services
State of California
Real Estate Services Division
Project Management & Development Branch
707 Third Street, Suite 4-105
West Sacramento, California 95605

NM&R
NICHOLS MELBURG & ROSSETTO
ARCHITECTS + ENGINEERS
300 Knollcrest Drive
Redding, CA. 96002
(530) 222-3300 (530) 222-3538 FAX
http://www.nmrdesign.com

Copyright © 2019
All ideas, designs, arrangements and plans indicated or represented by this drawing are owned by, and the property of, NICHOLS, MELBURG and ROSSETTO and were created, evolved and developed for use on, and in conjunction with, the specified project. None of such ideas, designs, arrangements or plans shall be used by, or disclosed to any person, firm or corporation for any purpose whatsoever without the written permission of NICHOLS, MELBURG and ROSSETTO.

LICENSE STAMPS
REGISTERED PROFESSIONAL ENGINEER
M 33498
EXPIRES 9/30/22
MECHANICAL
STATE OF CALIFORNIA
DATE SIGNED: 10-20-20

CONSULTANT
CAPITAL
ENGINEERING CONSULTANTS, INC.
RANCHO CORDOVA, CALIFORNIA
JD - HC/JH — PM - DESIGN TEAM
181205.00 — PROJECT NO.

DRAWING STATUS
CONSTRUCTION DOCUMENTS

ISSUE

No.	Date	Description
1	10/22/2020	INITIAL PLAN REVIEW
2	01/22/2021	AGENCY RESUBMITTAL
3	03/22/2021	AGENCY RESUBMITTAL

If drawing is not 30" x 42" it is a reduced print

PROJECT
RESIDENTIAL CENTER, UKIAH: REPLACEMENT OF EXISTING RESIDENTIAL CENTER
440 EAST HILL ROAD
WILLITS, CALIFORNIA 95490
MENDOCINO COUNTY
CALIFORNIA CONSERVATION CORP

Supervisor | Designed | Drawn: Author

DSA Application No.
02-118630

SHEET TITLE
COMET BLDG TITLE 24 COMPLIANCE

DGS Project Number: 000000000001826
NMR Project Number: 18-6456

Reference North: NORTH
Sheet Scale
Sheet Number: M401C

ISSUE DATE
July 9, 2021

Plot Date: 3/19/2021 1:29:48 PM
File Name: L:\Revit Local Files\CECI_DGS CCC Willits_Comet_MP18_Central_jduvalKTH47.rvt

STATE OF CALIFORNIA

Mechanical Systems

NRCC-MCH-E — CALIFORNIA ENERGY COMMISSION

CERTIFICATE OF COMPLIANCE	**NRCC-MCH-E**
Project Name: CCC Willits - Comet Building	**Report Page:** **(Page 10 of 10)**
Project Address:	**Date Prepared:** 9/3/2020

DOCUMENTATION AUTHOR'S DECLARATION STATEMENT

I certify that this Certificate of Compliance documentation is accurate and complete.

Documentation Author Name: Jessica Hughey	Documentation Author Signature:
Company: Capital Engineering Consultants Inc.	Signature Date: 10/20/2020
Address: 11020 Sun Center Dr. Suite 100	CEA/ HERS Certification Identification (if applicable):
City/State/Zip: Rancho Cordova CA 95670	Phone: (916) 850-3500

RESPONSIBLE PERSON'S DECLARATION STATEMENT

I certify the following under penalty of perjury, under the laws of the State of California:

1. The information provided on this Certificate of Compliance is true and correct.
2. I am eligible under Division 3 of the Business and Professions Code to accept responsibility for the building design or system design identified on this Certificate of Compliance (responsible designer)
3. The energy features and performance specifications, materials, components, and manufactured devices for the building design or system design identified on this Certificate of Compliance conform to the requirements of Title 24, Part 1 and Part 6 of the California Code of Regulations.
4. The building design features or system design features identified on this Certificate of Compliance are consistent with the information provided on other applicable compliance documents, worksheets, calculations, plans and specifications submitted to the enforcement agency for approval with this building permit application.
5. I will ensure that a completed signed copy of this Certificate of Compliance shall be made available with the building permit(s) issued for the building, and made available to the enforcement agency for all applicable inspections. I understand that a completed signed copy of this Certificate of Compliance is required to be included with the documentation the builder provides to the building owner at occupancy.

Responsible Designer Name: Kevin D. Stillman	Responsible Designer Signature:
Company: Capital Engineering Consultants, Inc.	Date Signed: 2020-09-03
Address: 11020 Sun Center Dr. Suite 100	License: M 33498
City/State/Zip: Rancho Cordova CA 95670	Phone:

Registration Number: — Registration Date/Time: — Registration Provider: Energysoft

CA Building Energy Efficiency Standards - 2019 Nonresidential Compliance — Report Version: 2019.0.001, Schema Version: rev 20190401 — Report Generated: 2020-09-03 16:13:28

STATE OF CALIFORNIA

Domestic Water Heating System

NRCC-PLB-E — CALIFORNIA ENERGY COMMISSION

CERTIFICATE OF COMPLIANCE	**NRCC-PLB-E**
Project Name: CCC Willits - Comet Building	**Report Page:** **(Page 3 of 9)**
Project Address:	**Date Prepared:** 9/3/2020

F. DOMESTIC HOT WATER EQUIPMENT

This table is used to demonstrate compliance with mandatory equipment requirements in §110.1 and §110.3. For high-rise residential and hotel/motel occupancies, compliance with prescriptive requirements in §150.1(c)8 must also be demonstrated and with §150.2 for addition and alteration scopes.

Equipment Schedule: Individual Systems

01 Name or Item Tag	02 Equipment Type	03 Volume (gal)	04 Max GPM/ First Hour Rating (FHR)	05 Rated Uniform Energy Factor (UEF)	06 Minimum Required Uniform Energy Factor (UEF)[1]

[1] *FOOTNOTE: Compliant equipment may be found in the Modernized Appliance Efficiency Database System (MAEDBS) on the Energy Commission website: https://cacertappliances.energy.ca.gov/Pages/Search/AdvancedSearch.aspx*

Water Heating Equipment in Individual Dwelling Units[1]

Equipment Type (select all that apply):

16	☐	Gas/propane instantaneous water heater with input rating <= 200,000 BTUH and no storage tank. Note: Can not comply using the prescriptive path with a storage tank per §150.1(c)8Ai (New Construction Only)
	☐	Gas/propane storage type water heater with input rating <= 75,000 BTUH (New Construction only)
		☐ Rated volume <= 55 gal
		☐ Rated volume > 55 gal
	☒	A single heat pump water heater with storage tank located in the garage or conditioned space. (New Construction Only)
		☐ Water heater meets the requirements of NEEA Advanced Water Heater Specification Tier 3 or higher.
	☐	A single heat pump water heater with storage tank located in the garage or conditioned space and be placed on an incompressible, rigid insulated surface with minimum R-10. (Alterations in climate zones 1-15 Only)
		☐ Water heater meets the requirements of NEEA Advanced Water Heater Specification Tier 3 or higher.
	☐	No gas connection to existing water heater location for replacement water heater. Consumer electric water heater must meet Title 20 Appliance Efficiency requirements (see Equipment Schedule above) per §150.2(b)1H. (Alterations only)

Registration Number: — Registration Date/Time: — Registration Provider: Energysoft

CA Building Energy Efficiency Standards - 2019 Nonresidential Compliance — Report Version: 2019.0.001, Schema Version: rev 20190401 — Report Generated: 2020-09-03 16:13:28

STATE OF CALIFORNIA

Domestic Water Heating System

NRCC-PLB-E — CALIFORNIA ENERGY COMMISSION

CERTIFICATE OF COMPLIANCE	**NRCC-PLB-E**
Project Name: CCC Willits - Comet Building	**Report Page:** **(Page 6 of 9)**
Project Address:	**Date Prepared:** 9/3/2020

G. DOMESTIC HOT WATER DISTRIBUTION SYSTEM

Mandatory Pipe Insulation All Occupancies

11	☒	For systems serving dwelling units, pipe insulation for the following applications is specified to have a minimum wall thickness of 1 in or a minimum R-value of 7.7 per §150.0(j)2A : • The first 5ft of cold water pipes form storage tank • All hot water piping with nominal diameter of 3/4 in - 1 in • All hot water piping with nominal diameter < 3/4 in associated with DHW recirculation systems • Piping with nominal diameter < 3/4 from heating source to storage tank or between tanks • Piping with nominal diameter < 3/4 buried below grade • All hot water pipes with nominal diameter < 3/4 from heating source to kitchen fixtures
12	☒	For systems serving nonresidential spaces, pipe insulation for the following applications is specified to comply with Table 120.3-A (see below) per §120.3 : • Recirculating system piping, including supply and return piping of the water heater • The first 8 ft of hot and cold outlet piping, including between storage tank and heat trap, for a nonrecirculating storage system • Pipes that are externally heated
13	☒	Insulation shall be protected from damage, including that due to sunlight, moisture, equipment maintenance, and wind. Insulation exposed to weather shall be installed with a cover suitable for outdoor service per §120.3(b) and §150.0(j)3

TABLE 120.3-A PIPE INSULATION THICKNESS

Fluid Temperature Range (°F)	Conductivity Range (Btu-in per hour per ft² per °F)	Insulation Mean Rating Temp (°F)	Nominal Pipe Diameter (in)		
			< 1	1 to < 1.5	1.5 to < 4
			Minimum Insulation Required		
105-140	0.22 - 0.28	100	1.0 in or R-7.7	1.5 in or R-12.5	1.5 in or R-11

Registration Number: — Registration Date/Time: — Registration Provider: Energysoft

CA Building Energy Efficiency Standards - 2019 Nonresidential Compliance — Report Version: 2019.0.001, Schema Version: rev 20190401 — Report Generated: 2020-09-03 16:13:28

STATE OF CALIFORNIA

Domestic Water Heating System

NRCC-PLB-E — CALIFORNIA ENERGY COMMISSION

CERTIFICATE OF COMPLIANCE	**NRCC-PLB-E**
Project Name: CCC Willits - Comet Building	**Report Page:** **(Page 1 of 9)**
Project Address:	**Date Prepared:** 9/3/2020

This document is used to demonstrate compliance for nonresidential occupancies with requirements in §110.1, §110.3, §120.3, and §140.5, and with requirements in §141.0 for additions and alterations, for domestic water heating scopes using the prescriptive path. For high-rise residential and hotel/motel occupancies compliance is demonstrated with requirements in §110.1, §110.3, §120.3, §150.0 and §150.1(c)8, and with requirements §150.2 for additions.

A. GENERAL INFORMATION

01	Project Location (city)	Willits	02	Climate Zone	2
03	Occupancy Types Within Project (select all that apply):				
☒	Nonresidential	☒ High-Rise Residential	☐	Hotel/Motel	
☐	State Building	☐ Healthcare Facility	☐	Other (Write In)	

B. PROJECT SCOPE

This table includes domestic water heating systems that are within the scope of the permit application and are demonstrating compliance using the prescriptive paths outlined in §140.5, §150.1(c)8, and §141.0(a), or §141.0(b)2N for additions or alterations. Solar water heating systems are documented on the NRCC-SRA compliance document. Combined hydronic water heating systems are documented on the NRCC-MCH compliance document.

01 My project consists of (check all that apply):	02 System Type[1,2]	03 System Components		
☒	New system (DHW system being installed for the first time in newly constructed building)	Individual System (serving nonresidential spaces)	☒ Equipment	☒ Distribution	☒ Controls
☒	New system (DHW system being installed for the first time in newly constructed building)	Individual Dwelling Units System(s)	☒ Equipment	☒ Distribution	☒ Controls
☐	System Alteration (equipment, distribution or controls)		☐ Equipment	☐ Distribution	☐ Controls

[1] *FOOTNOTES: Point of use water heaters, or other non-central systems used to serve nonresidential spaces, are considered individual systems.*

[2] *Dwelling units refers to hotel/motel guest rooms and units in a high-rise residential occupancy.*

Registration Number: — Registration Date/Time: — Registration Provider: Energysoft

CA Building Energy Efficiency Standards - 2019 Nonresidential Compliance — Report Version: 2019.0.001, Schema Version: rev 20190401 — Report Generated: 2020-09-03 16:13:28

STATE OF CALIFORNIA

Domestic Water Heating System

NRCC-PLB-E — CALIFORNIA ENERGY COMMISSION

CERTIFICATE OF COMPLIANCE	**NRCC-PLB-E**
Project Name: CCC Willits - Comet Building	**Report Page:** **(Page 4 of 9)**
Project Address:	**Date Prepared:** 9/3/2020

F. DOMESTIC HOT WATER EQUIPMENT

	Yes	No	Not Applicable	Requirement
17	☐	☐	☒	For gas or prcpane water heaters serving individual dwelling units, the follow components are included in the design per §150.0(n)1 : (New Construction only) • Dedicated 125V, 20 amp electrical receptacle that is connected to the panel with a 120/240V 3 conductor, 10 AWG copper branch circuit within 3ft from the water heater that's accessible and with both ends of the unused conductor labeled with the word "spare" and be electrically isolated. A single pole circuit breaker space in the panel adjacent to the circuit breaker for the branch circuit is provided labeled with the word "future 240V use"; and • Category III or IV vent, or Type B vent with straight pipe between the outside termination and where the water heater is installed; and • Condensate drain that is no more than 2in higher than the base of the water heater and drains without pump assistance; and [• Gas supply line with a capacity of at least 200,000 BTUH

[1] *FOOTNOTE: Dwelling Units refers to hotel/motel guest rooms and units in a high-rise residential occupancy.*

Water Heating Equipment All Occupancies

	Yes	No	Not Applicable	Requirement
18	☐	☐	☒	Unfired storage tank insulation shall have Internal + External >=R-16 OR External >=R-12. Label required per §110.3(c)3
19	☐	☐	☒	New state buildings 60% of energy for service water heating from site solar energy or recovered energy per §110.3(c)5
20	☐	☐	☒	Isolation valves for instantaneous water heater with input rating <6.8 kBTUH or 2 kW has been specified per §110.3(c)6

Registration Number: — Registration Date/Time: — Registration Provider: Energysoft

CA Building Energy Efficiency Standards - 2019 Nonresidential Compliance — Report Version: 2019.0.001, Schema Version: rev 20190401 — Report Generated: 2020-09-03 16:13:28

STATE OF CALIFORNIA

Domestic Water Heating System

NRCC-PLB-E — CALIFORNIA ENERGY COMMISSION

CERTIFICATE OF COMPLIANCE	**NRCC-PLB-E**
Project Name: CCC Willits - Comet Building	**Report Page:** **(Page 7 of 9)**
Project Address:	**Date Prepared:** 9/3/2020

H. DOMESTIC HOT WATER CONTROLS

This table is used to demonstrate compliance with control requirements in §110.3 for all occupancies. For high-rise residential and hotel/motel occupancies, compliance is also demonstrated with requirements in §150.1(c)8

	Yes	No	Not Applicable	Requirement
01	☒	☐	☐	Construction documents require manufacturer certification that service water-heating systems are equipped with automatic temperature controls capable of adjusting temperature settings per §110.3(a).
02	☐	☐	☒	Systems with capacity > 167,000 BTUH equipped with outlet temperature controls per §110.3(c)1 unless covered by California Plumbing Code §13.0.
03	☐	☐	☒	Controls for circulating pumps or electrical heat trace systems are capable of automatically turning off the system per §110.3(c)2 unless systems serves healthcare facility.
04	☐	☐	☒	For recirculation systems serving multiple dwelling units, design includes automatic pump controls per §150.1(c)8Bii, or §150.2 for additions or alterations.
05	☐	☐	☒	For recirculation systems serving individual dwelling units, design includes manual on/off controls as specified in Reference Appendix RA4.4.9 per §150.1(c)8.
06	☐	☐	☒	For replacement single heat pump water heaters serving individual dwelling units in climate zone 1-15, design includes communication interface that meets demand responsive control requirements of §110.12(a) per §150.2(b)1Hiii.

I. DECLARATION OF REQUIRED CERTIFICATES OF INSTALLATION

Selections have been made based on information provided in this document. If any selection have been changed by permit applicant, an explanation should be included in Table E. Additional Remarks. These documents must be provided to the building inspector during construction and can be found online at https://www.energy.ca.gov/title24/2019standards/2019_compliance_documents/Nonresidential_Documents/NRCI/

Yes	No	Form/Title	Field Inspector Pass	Field Inspector Fail
●	○	NRCI-PLB-01-E - Must be submitted for all buildings	☐	☐
○	●	NRCI-PLB-02-E - Must be submitted for high-rise residential and hotel/motel central hot water distribution systems to be recognized for compliance.	☐	☐
●	○	NRCI-PLB-03-E - Must be submitted for high-rise residential and hotel/motel single dwelling unit hot water distribution systems to be recognized for compliance.	☐	☐

Registration Number: — Registration Date/Time: — Registration Provider: Energysoft

CA Building Energy Efficiency Standards - 2019 Nonresidential Compliance — Report Version: 2019.0.001, Schema Version: rev 20190401 — Report Generated: 2020-09-03 16:13:28

STATE OF CALIFORNIA

Domestic Water Heating System

NRCC-PLB-E — CALIFORNIA ENERGY COMMISSION

CERTIFICATE OF COMPLIANCE	**NRCC-PLB-E**
Project Name: CCC Willits - Comet Building	**Report Page:** **(Page 2 of 9)**
Project Address:	**Date Prepared:** 9/3/2020

C. COMPLIANCE RESULTS

Table C will indicate if the project data input into the compliance document is compliant with water heating requirements. If this table says "DOES NOT COMPLY" or "COMPLIES with Exceptional Conditions" refer to Table D or the table indicated as not compliant for guidance.

01	02	03	04
Domestic Hot Water Equipment	Distribution Systems	Controls	**Compliance Results**
Table F	Table G	Table H	
Yes	Yes	Yes	COMPLIES

D. EXCEPTIONAL CONDITIONS

This table is auto-filled with uneditable comments because of selections made or data entered in tables throughout the form.

E. ADDITIONAL REMARKS

This table is includes remarks made by the permit applicant to the Authority Having Jurisdiction.

Registration Number: — Registration Date/Time: — Registration Provider: Energysoft

CA Building Energy Efficiency Standards - 2019 Nonresidential Compliance — Report Version: 2019.0.001, Schema Version: rev 20190401 — Report Generated: 2020-09-03 16:13:28

STATE OF CALIFORNIA

Domestic Water Heating System

NRCC-PLB-E — CALIFORNIA ENERGY COMMISSION

CERTIFICATE OF COMPLIANCE	**NRCC-PLB-E**
Project Name: CCC Willits - Comet Building	**Report Page:** **(Page 5 of 9)**
Project Address:	**Date Prepared:** 9/3/2020

G. DOMESTIC HOT WATER DISTRIBUTION SYSTEM

This table is used to demonstrate compliance for nonresidential occupancies with distribution requirements in §120.3 and §140.5. For high-rise residential and hotel/motel occupancies, compliance is demonstrated with requirements §110.3(c), §120.3, §150.0, §150.1

Distribution in Individual Dwelling Units

	Yes	No	Not Applicable	Requirement
08	○	○	●	The dwelling unit is designed to have fenestration products with a weighted average U-factor <=0.24 plus one of the following options per §150.1(c)8Ai : (New Construction Only) • Compact hot water distribution system field verified by a HERS Rater per Reference Appendix RA4.4.16 • A drain water heat recovery system that is field verified by a HERS rater per Reference Appendix RA3.6.9 ☐ Compact hot water distribution system ☐ A drain water heat recovery system
09	●	○	○	One of the following options is included in the design per §150.1(c)8Aiv : (New Construction only) • Compact hot water distribution system field verified by HERS rater per Reference Appendix RA4.4.6 and a drain water heat recovery system that is field verified by a HERS rater per Reference Appendix RA3.6.9 • A photovoltaic system capacity of 0.3kWdc (for climate zones 2-15) or 1.1kWcd (for climate zones 1 & 16) larger than the requirement specified in §150.1(c)14. ☐ Compact hot water distribution system and a drain water heat recovery system ☒ A photovoltaic system
10	○	○	●	One of the following options is included in the design per §150.1(c)8Av : (New Construction only) • Compact hot water distribution system per Reference Appendix RA4.4.6 for projects in climates zones 1 and 16. • A photovoltaic system capacity of 0.3kWdc (form climate zones 1 and 16) larger than the requirement specified in §150.1(c)14. ☐ Compact hot water distribution system ☐ A photovoltaic system

Registration Number: — Registration Date/Time: — Registration Provider: Energysoft

CA Building Energy Efficiency Standards - 2019 Nonresidential Compliance — Report Version: 2019.0.001, Schema Version: rev 20190401 — Report Generated: 2020-09-03 16:13:28

STATE OF CALIFORNIA

Domestic Water Heating System

NRCC-PLB-E — CALIFORNIA ENERGY COMMISSION

CERTIFICATE OF COMPLIANCE	**NRCC-PLB-E**
Project Name: CCC Willits - Comet Building	**Report Page:** **(Page 8 of 9)**
Project Address:	**Date Prepared:** 9/3/2020

J.DECLARATION OF REQUIRED CERTIFICATES OF ACCEPTANCE

There are no Certificates of Acceptance applicable to service water heating requirements.

K. DECLARATION OF REQUIRED CERTIFICATES OF VERIFICATION

Selections have been made based on information provided in this document. If any selection have been changed by permit applicant, an explanation should be included in Table E. Additional Remarks. These documents must be completed by a HERS Rater and provided to the building inspector during construction. The final documents must be created by a HERS Providers registry, but drafts can be found online at https://www.energy.ca.gov/title24/2019standards/2019_compliance_documents/Nonresidential_Documents/NRCI/

Yes	No	Form/Title	Field Inspector Pass	Field Inspector Fail
○	●	NRCV-PLB-21-H High-rise Residential Central Hot Water Distribution HERS Verification	☐	☐
○	●	NRCV-PLB-22-H High-rise Residential Individual Dwelling Unit Hot Water Distribution HERS Verification	☐	☐

Registration Number: — Registration Date/Time: — Registration Provider: Energysoft

CA Building Energy Efficiency Standards - 2019 Nonresidential Compliance — Report Version: 2019.0.001, Schema Version: rev 20190401 — Report Generated: 2020-09-03 16:13:28

IDENTIFICATION STAMP
DIV. OF THE STATE ARCHITECT
APP: 02-118630 INC:
REVIEWED FOR
SS ☐ FLS ☐ ACS ☑
DATE: 04/13/2021

OFFICE OF THE STATE FIRE MARSHAL
APPROVED FIRE AND PANIC ONLY

Approval of this plan does not authorize or approve any omission or deviation from applicable regulations. Final approval is subject to field inspection. One set of approved plans shall be available on the project site at all times.

PERMIT NO. 20-N-2332-CP
REVIEWED BY: LEO CATAYLO, OSFM
DATE: 4/ /2021

DGS GENERAL SERVICES
Department of General Services
State of California
Real Estate Services Division
Project Management & Development Branch
707 Third Street, Suite 4-105
West Sacramento, California 95605

NICHOLS MELBURG & ROSSETTO ARCHITECTS + ENGINEERS
300 Knollcrest Drive
Redding, CA. 96002
(530) 222-3300 (530) 222-3538 FAX
http://www.nmrdesign.com

Copyright © 2019
All ideas, designs, arrangements and plans indicated or represented by this drawing are owned by, and the property of, NICHOLS, MELBURG and ROSSETTO and were created, evolved and developed for use on, and in conjunction with, the specified project. None of such ideas, designs, arrangements or plans shall be used by, or disclosed to any person, firm or corporation for any purpose whatsoever without the written permission of NICHOLS, MELBURG and ROSSETTO

LICENSE STAMPS

REGISTERED PROFESSIONAL ENGINEER — KEVIN D. STILLMAN — M 33498 — EXPIRES 9/30/22 — MECHANICAL — STATE OF CALIFORNIA
DATE SIGNED: 10-20-20

CONSULTANT

CAPITAL ENGINEERING CONSULTANTS, INC.
RANCHO CORDOVA, CALIFORNIA
JD - HC/JH — PM - DESIGN TEAM
181205.00 — PROJECT NO.

DRAWING STATUS
CONSTRUCTION DOCUMENTS

ISSUE

No.	Date	Description
1	10/22/2020	INITIAL PLAN REVIEW
2	01/22/2021	AGENCY RESUBMITTAL
3	03/22/2021	AGENCY RESUBMITTAL

If drawing is not 30" x 42" it is a reduced print

PROJECT
RESIDENTIAL CENTER, UKIAH: REPLACEMENT OF EXISTING RESIDENTIAL CENTER
440 EAST HILL ROAD
WILLITS, CALIFORNIA 95490
MENDOCINO COUNTY
CALIFORNIA CONSERVATION CORP

Supervisor	Designed	Drawn
		Author

DSA Application No.
02-118630

SHEET TITLE
COMET BLDG TITLE 24 COMPLIANCE

DGS Project Number: 0000000000001826
NMR Project Number: 18-6456

Reference North: NORTH
Sheet Scale:
Sheet Number: M402C

ISSUE DATE
July 9, 2021

Plot Date: 3/19/2021 1:29:43 PM
File Name: L:\Revit Local Files\CECI_DGS CCC Willits_Comet_MP18_Central_jkuvalKTH47.rvt

STATE OF CALIFORNIA

Domestic Water Heating System

NRCC-PLB-E

CALIFORNIA ENERGY COMMISSION

CERTIFICATE OF COMPLIANCE		NRCC-PLB-E
Project Name:	CCC Willits - Comet Building	Report Page: (Page 9 of 9)
Project Address:		Date Prepared: 9/3/2020

DOCUMENTATION AUTHOR'S DECLARATION STATEMENT

I certify that this Certificate of Compliance documentation is accurate and complete.

Documentation Author Name:	Documentation Author Signature:
Jessica Hughey	
Company: Capital Engineering Consultants Inc.	Signature Date: 10/20/2020
Address: 11020 Sun Center Dr. Suite 100	CEA/ HERS Certification Identification (if applicable):
City/State/Zip: Rancho Cordova CA 95670	Phone: (916) 850-3500

RESPONSIBLE PERSON'S DECLARATION STATEMENT

I certify the following under penalty of perjury, under the laws of the State of California:

1. The information provided on this Certificate of Compliance is true and correct.
2. I am eligible under Division 3 of the Business and Professions Code to accept responsibility for the building design or system design identified on this Certificate of Compliance (responsible designer)
3. The energy features and performance specifications, materials, components, and manufactured devices for the building design or system design identified on this Certificate of Compliance conform to the requirements of Title 24, Part 1 and Part 6 of the California Code of Regulations.
4. The building design features or system design features identified on this Certificate of Compliance are consistent with the information provided on other applicable compliance documents, worksheets, calculations, plans and specifications submitted to the enforcement agency for approval with this building permit application.
5. I will ensure that a completed signed copy of this Certificate of Compliance shall be made available with the building permit(s) issued for the building, and made available to the enforcement agency for all applicable inspections. I understand that a comleted signed copy of this Certificate of Compliance is required to be included with the documentation the builder provides to the building owner at occupancy.

Responsible Designer Name:	Responsible Designer Signature:
Kevin D. Stillman	
Company: Capital Engineering Consultants, Inc.	Date Signed: 2020-09-03
Address: 11020 Sun Center Dr. Suite 100	License: M 33498
City/State/Zip: Rancho Cordova CA 95670	Phone:

Registration Number:

CA Building Energy Efficiency Standards - 2019 Nonresidential Compliance

Registration Date/Time:

Report Version: 2019.0.001
Schema Version: rev 20190401

Registration Provider: Energysoft

Report Generated: 2020-09-03 16:13:28

IDENTIFICATION STAMP
DIV. OF THE STATE ARCHITECT
APP: 02-118630 INC:
REVIEWED FOR
SS ☐ FLS ☐ ACS ☑
DATE: 04/13/2021

OFFICE OF THE STATE FIRE MARSHAL
APPROVED FIRE AND PANIC ONLY
Approval of this plan does not authorize or approve any omission or deviation from applicable regulations. Final approval is subject to field inspection. One set of approved plans shall be available on the project site at all times.
PERMIT NO. 20-N-2332-CP
REVIEWED BY: LEO CATAYLO, OSFM
DATE: 4 / /2021

DGS GENERAL SERVICES
Department of General Services
State of California
Real Estate Services Division
Project Management & Development Branch
707 Third Street, Suite 4-105
West Sacramento, California 95605

NICHOLS MELBURG & ROSSETTO
ARCHITECTS + ENGINEERS
300 Knollcrest Drive
Redding, CA. 96002
(530) 222-3300 (530) 222-3538 FAX
http://www.nmrdesign.com

Copyright © 2019
All ideas, designs, arrangements and plans indicated or represented by this drawing are owned by, and the property of, NICHOLS, MELBURG and ROSSETTO and were created, evolved and developed for use on, and in conjunction with, the specified project. None of such ideas, designs, arrangements or plans shall be used by, or disclosed to any person, firm or corporation for any purpose whatsoever without the written permission of NICHOLS, MELBURG and ROSSETTO.

LICENSE STAMPS

REGISTERED PROFESSIONAL ENGINEER
Kevin D. Stillman
M 33498
EXPIRES 9/30/22
MECHANICAL
STATE OF CALIFORNIA

DATE SIGNED: 10-20-20

CONSULTANT

CAPITAL
ENGINEERING CONSULTANTS, INC.
RANCHO CORDOVA, CALIFORNIA

JD - HC/JH — PM - DESIGN TEAM
181205.00 — PROJECT NO.

DRAWING STATUS
CONSTRUCTION DOCUMENTS

ISSUE

No.	Date	Description
1	10/22/2020	INITIAL PLAN REVIEW
2	01/22/2021	AGENCY RESUBMITTAL
3	03/22/2021	AGENCY RESUBMITTAL

If drawing is not 30" x 42" it is a reduced print

PROJECT
RESIDENTIAL CENTER, UKIAH: REPLACEMENT OF EXISTING RESIDENTIAL CENTER
440 EAST HILL ROAD
WILLITS, CALIFORNIA 95490
MENDOCINO COUNTY
CALIFORNIA CONSERVATION CORP

Supervisor	Designed	Drawn
		Author

DSA Application No.
02-118630

SHEET TITLE
COMET BLDG TITLE 24 COMPLIANCE

DGS Project Number: 0000000000001826
NMR Project Number: 18-6456

Reference North: NORTH
Sheet Scale:
Sheet Number: M403C

ISSUE DATE
July 9, 2021

Plot Date: 3/16/2021 1:26:51 PM
File Name: L:\Revit Local Files\CECI_DGS CCC Willits_Comet_MP18_Central_jduvall\KTH47.rvt

KEYNOTES:

1. PROVIDE WINDOW SENSOR AT OPERABLE WINDOW, FOR INTERLOCK WITH FAN COIL, SEE 1/M601.

REFRIGERANT CONCENTRATION CALC

SYSTEM	REFRIGERANT		DESIGN ROOM FLOOR AREA [SQ FT]	DESIGN ROOM CLG HEIGHT [FT]	DESIGN ROOM VOLUME [CU FT]	CONCENTRATION [LBS / 1000 CF]	
	TYPE	CHARGE [LBS]				DESIGN	LIMIT
HP/E-1	R-410A	51.6	243	10'-0"	2,430	21.2	26
SAC/E-1	R-410A	1.0	91	10'-0"	910	1.1	26

NOTES:

1. DESIGN REFRIGERANT CHARGE IS CALCULATED USING BASIS OF DESIGN EQUIPMENT MANUFACTURER'S CATALOG DATA FOR FACTORY PRE-CHARGE AND ADDITIONAL CHARGE FOR ASSUMED LINE LENGTHS. INSTALLING CONTRACTOR SHALL PROVIDE UPDATED CALCULATIONS BASED ON ACTUAL REFRIGERANT CHARGE AND MAKE THEM AVAILABLE FOR REVIEW BY FIELD INSPECTOR OR OTHER AGENCIES.
2. CONCENTRATION LIMITS ARE TAKEN FROM 2019 CALIFORNIA MECHANICAL CODE TABLE 1102.3.

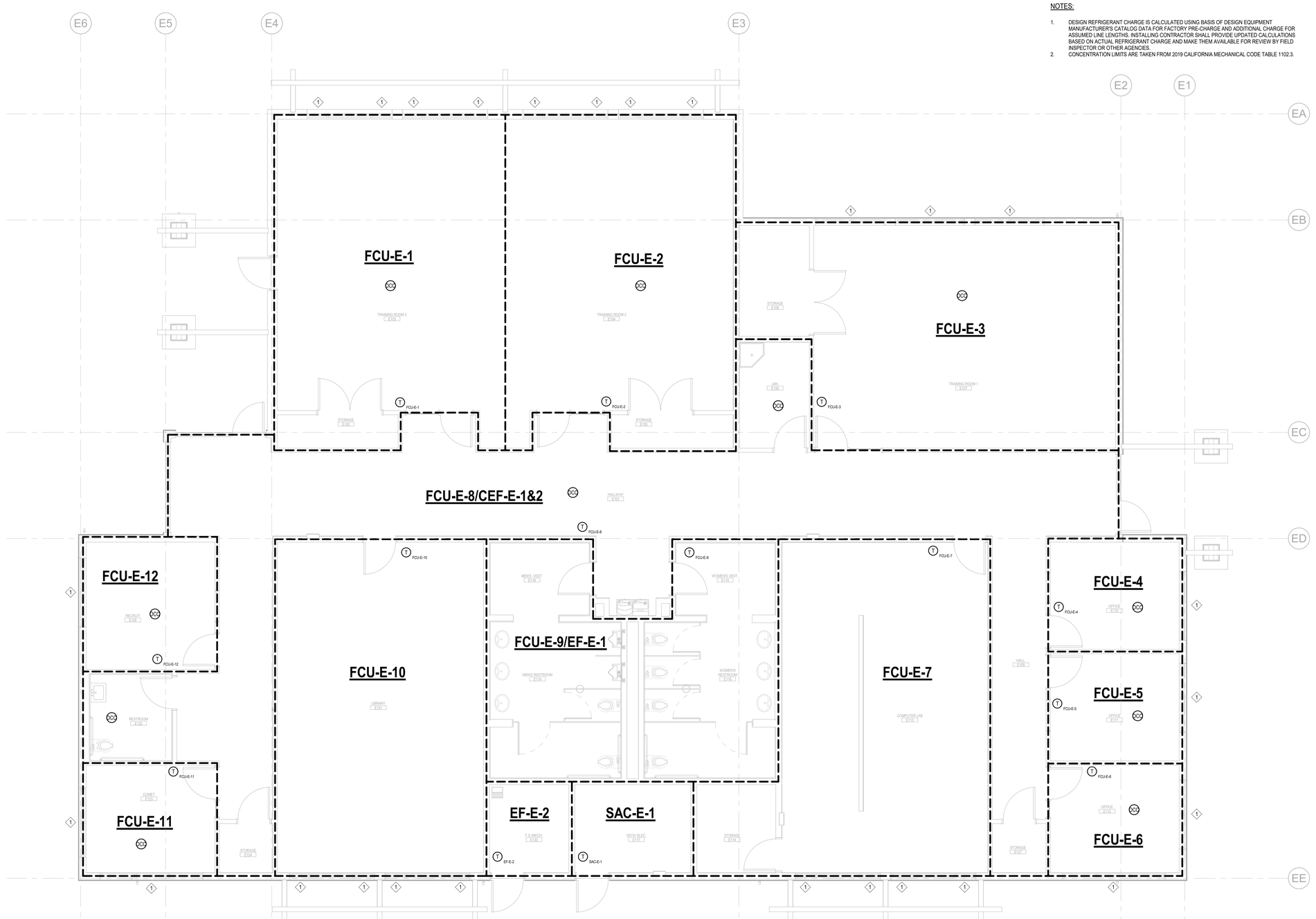

1 M101E EDUCATION BLDG HVAC ZONE PLAN

SCALE: 1/4" = 1'-0"

Plot Date: 3/19/2021 1:28:18 PM
File Name: J:\Revit Local Files\CEC_DGS CCC Willits_ED_MP18_Central_jduvall\KT1447.rvt

IDENTIFICATION STAMP
DIV. OF THE STATE ARCHITECT
APP: 02-118630 INC:
REVIEWED FOR
SS ☐ FLS ☐ ACS ☑
DATE: 04/13/2021

OFFICE OF THE STATE FIRE MARSHAL
APPROVED FIRE AND PANIC ONLY
Approval of this plan does not authorize or approve any omission or deviation from applicable regulations. Final approval is subject to field inspection. One set of approved plans shall be available on the project site at all times.
PERMIT NO. 20-N-2332-CP
REVIEWED BY: LEO CATAYLO, OSFM
DATE: 4/1/2021

GENERAL SERVICES
Department of General Services
State of California
Real Estate Services Division
Project Management & Development Branch
707 Third Street, Suite 4-105
West Sacramento, California 95605

NICHOLS MELBURG & ROSSETTO
ARCHITECTS + ENGINEERS
300 Knollcrest Drive
Redding, CA. 96002
(530) 222-3300 (530) 222-3538 FAX
http://www.nmrdesign.com

Copyright © 2019
All ideas, designs, arrangements and plans indicated or represented by this drawing are owned by, and the property of, NICHOLS, MELBURG and ROSSETTO and were created, evolved and developed for use on, and in conjunction with, the specified project. None of such ideas, designs, arrangements or plans shall be used by, or disclosed to any person, firm or corporation for any purpose whatsoever without the written permission of NICHOLS, MELBURG and ROSSETTO

LICENSE STAMPS

REGISTERED PROFESSIONAL ENGINEER
KENT D. DUVALL
M 33498
EXPIRES 9/30/22
MECHANICAL
STATE OF CALIFORNIA
DATE SIGNED: 10-20-20

CONSULTANT

CAPITAL
ENGINEERING CONSULTANTS, INC.
RANCHO CORDOVA, CALIFORNIA
JD - HCUH — PM - DESIGN TEAM
181205.00 — PROJECT NO.

DRAWING STATUS
CONSTRUCTION DOCUMENTS

ISSUE

No.	Date	Description
1	10/22/2020	INITIAL PLAN REVIEW
2	01/22/2021	AGENCY RESUBMITTAL
3	03/22/2021	AGENCY RESUBMITTAL

If drawing is not 30" x 42" it is a reduced print

PROJECT
RESIDENTIAL CENTER, UKIAH: REPLACEMENT OF EXISTING RESIDENTIAL CENTER
440 EAST HILL ROAD
WILLITS, CALIFORNIA 95490
MENDOCINO COUNTY
CALIFORNIA CONSERVATION CORP

Supervisor	Designed	Drawn
		Author

DSA Application No.
02-118630

SHEET TITLE
EDUCATION BLDG HVAC ZONE PLAN

DGS Project Number	NMR Project Number
0000000000001826	18-6456

Reference North
Sheet Scale: As indicated
Sheet Number: M101E

ISSUE DATE
July 9, 2021

SHEET NOTES:

1. SEE M001 FOR TABLE OF BRANCH DUCT SIZES TO INDIVIDUAL DIFFUSERS, GRILLES & REGISTERS. SIZE SUPPLY AND RETURN AIR DUCT PLENUMS ENTERING AND LEAVING FAN COILS TO MATCH SIZE OF DUCT CONNECTIONS AT FAN COILS. LINE DUCT AS INDICATED ON PLANS.

KEY NOTES:

1. ELECTRICAL POWER METER, PROVIDED BY BAS CONTRACTOR. COORDINATE LOCATION AND INSTALLATION WITH DIV 26. SEE 2/M604 AND 1/M600.

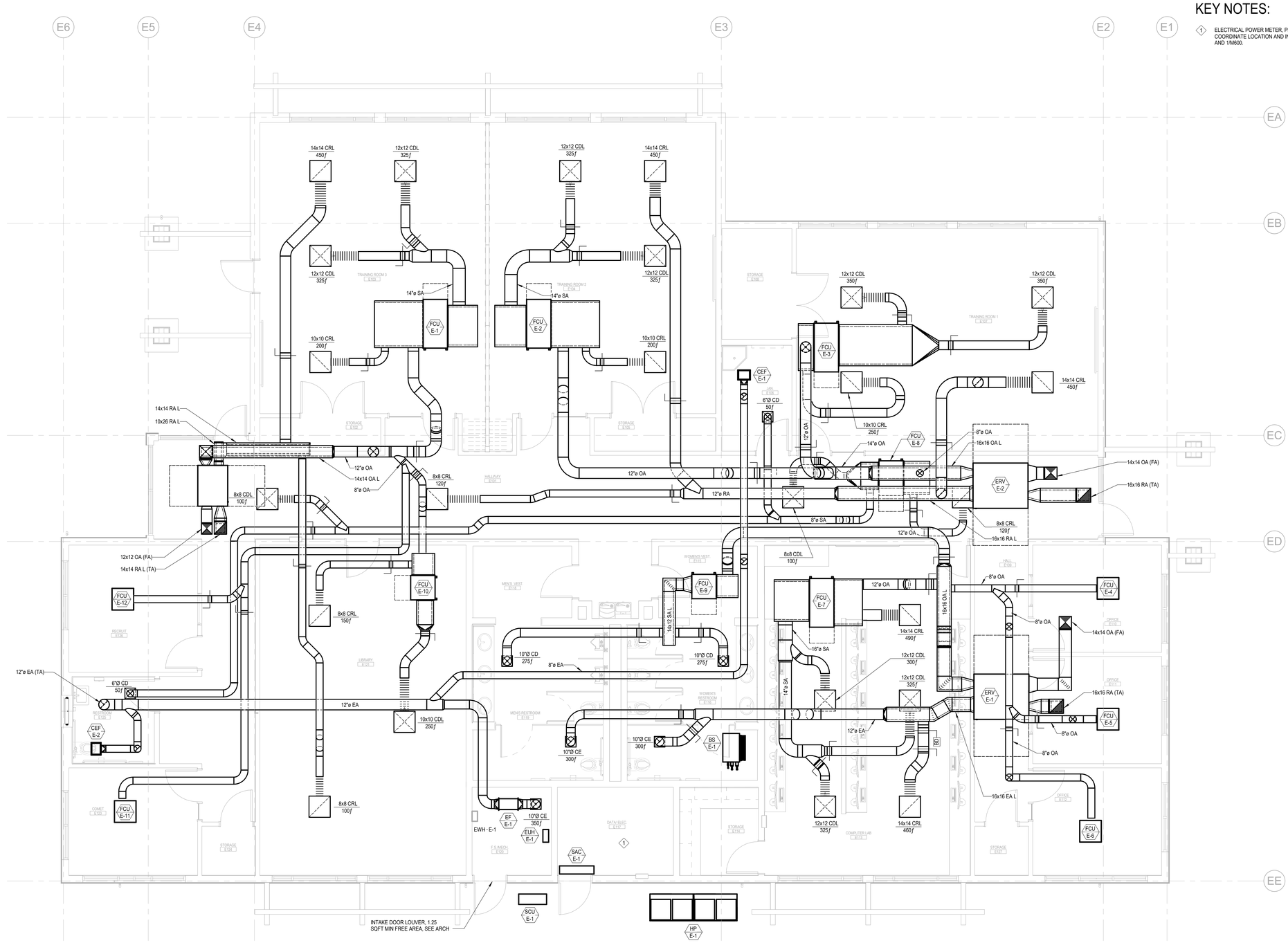

1 M201E EDUCATION BLDG HVAC FLOOR PLAN

SCALE: 1/4" = 1'-0"

Plot Date: 3/10/2021 1:28:27 PM
File Name: L:\Revit Local\ Files\CEC_DGS CCC Willits_ED_MP18_Central_jdunn\KT1417.rvt

IDENTIFICATION STAMP
DIV. OF THE STATE ARCHITECT
APP: 02-118630 INC:
REVIEWED FOR
SS ☐ FLS ☐ ACS ☑
DATE: 04/13/2021

OFFICE OF THE STATE FIRE MARSHAL
APPROVED FIRE AND PANIC ONLY
Approval of this plan does not authorize or approve any omission or deviation from applicable regulations. Final approval is subject to field inspection. One set of approved plans shall be available on the project site at all times.
PERMIT NO. 20-N-2332-CP
REVIEWED BY: LEO CATAYLO, OSFM
DATE: 4/ /2021

GENERAL SERVICES
Department of General Services
State of California
Real Estate Services Division
Project Management & Development Branch
707 Third Street, Suite 4-105
West Sacramento, California 95605

NICHOLS MELBURG & ROSSETTO
ARCHITECTS + ENGINEERS
300 Knollcrest Drive
Redding, CA. 96002
(530) 222-3300 (530) 222-3538 FAX
http://www.nmrdesign.com

Copyright © 2019
All ideas, designs, arrangements and plans indicated or represented by this drawing are owned by, and the property of, NICHOLS, MELBURG and ROSSETTO and were created, evolved and developed for use on, and in conjunction with, the specified project. None of such ideas, designs, arrangements or plans shall be used by, or disclosed to any person, firm or corporation for any purpose whatsoever without the written permission of NICHOLS, MELBURG and ROSSETTO

LICENSE STAMPS

REGISTERED PROFESSIONAL ENGINEER
M 33498
EXPIRES 9/30/22
MECHANICAL
STATE OF CALIFORNIA
DATE SIGNED: 10-20-20

CONSULTANT

CAPITAL
ENGINEERING CONSULTANTS, INC.
RANCHO CORDOVA, CALIFORNIA
JD - HC/JH — PM - DESIGN TEAM
181205.00 — PROJECT NO.

DRAWING STATUS
CONSTRUCTION DOCUMENTS

ISSUE

No.	Date	Description
1	10/22/2020	INITIAL PLAN REVIEW
2	01/22/2021	AGENCY RESUBMITTAL
3	03/22/2021	AGENCY RESUBMITTAL

If drawing is not 30" x 42" it is a reduced print

PROJECT
RESIDENTIAL CENTER, UKIAH: REPLACEMENT OF EXISTING RESIDENTIAL CENTER
440 EAST HILL ROAD
WILLITS, CALIFORNIA 95490
MENDOCINO COUNTY
CALIFORNIA CONSERVATION CORP

Supervisor	Designed	Drawn
		Author

DSA Application No.
02-118630

SHEET TITLE
EDUCATION BLDG HVAC FLOOR PLAN

DGS Project Number	NMR Project Number
0000000000001826	18-6456

Reference North
Sheet Scale 1/4" = 1'-0"
Sheet Number M201E

ISSUE DATE
July 9, 2021

KEYNOTES:

1. PROVIDE DUCT PLENUM CONNECTION TO LOUVER. SIZED TO MATCH LOUVER DIMENSIONS.

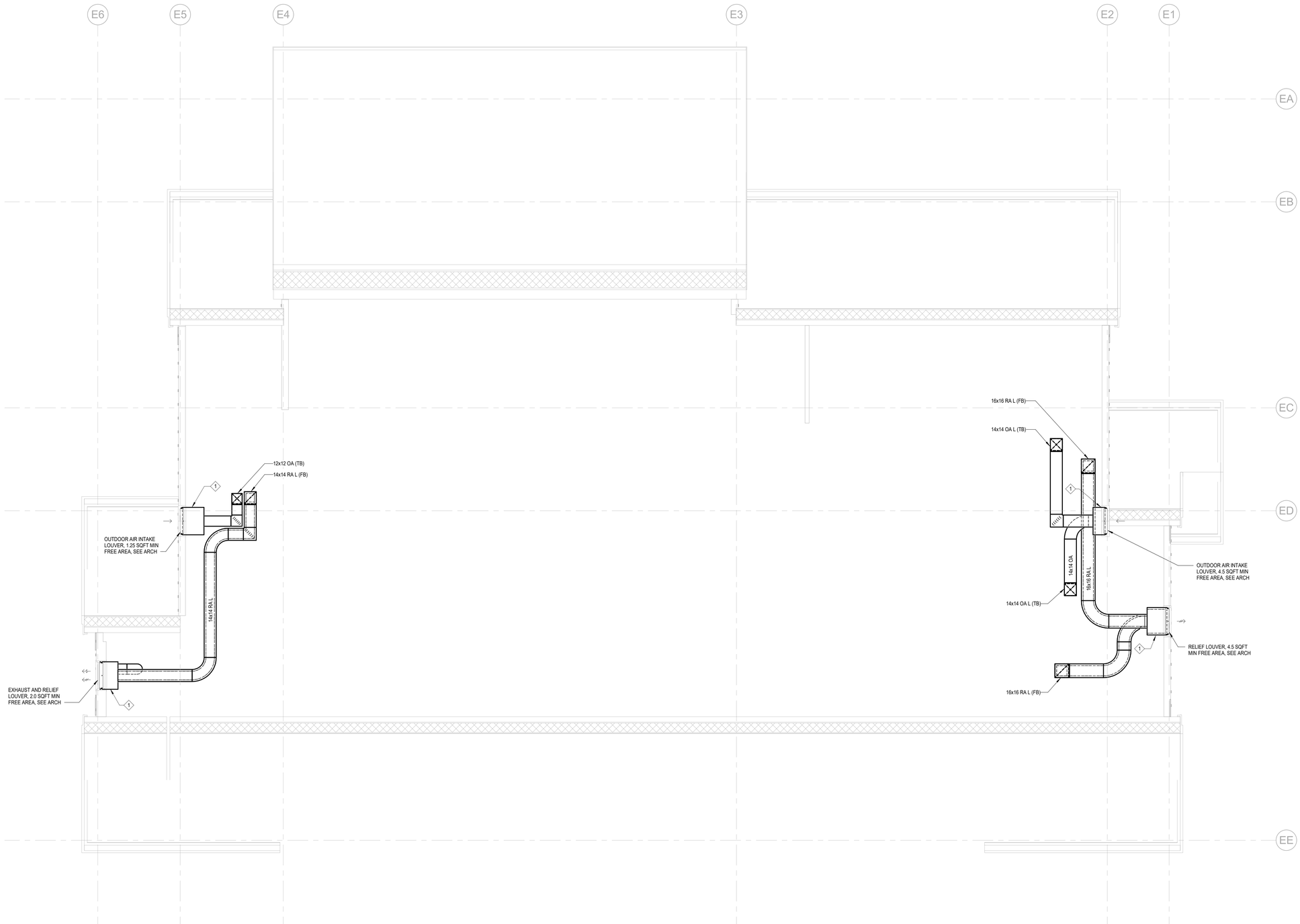

1 M202E EDUCATION BLDG HVAC PLENUM PLAN

SCALE: 1/4" = 1'-0"

Plot Date: 3/16/2021 1:29:24 PM
File Name: L:\Revit Local Files\CECI_DGS CCC Willits_ED_MP18_Central_jdvoa\KTH47.rvt

IDENTIFICATION STAMP
DIV. OF THE STATE ARCHITECT
APP: 02-118630 INC:
REVIEWED FOR
SS ☐ FLS ☐ ACS ☑
DATE: 04/13/2021

OFFICE OF THE STATE FIRE MARSHAL
APPROVED FIRE AND PANIC ONLY
Approval of this plan does not authorize or approve any omission or deviation from applicable regulations. Final approval is subject to field inspection. One set of approved plans shall be available on the project site at all times.
PERMIT NO. 20-N-2332-CP
REVIEWED BY: LEO CATAYLO, OSFM
DATE: 4 / /2021

DGS GENERAL SERVICES
Department of General Services
State of California
Real Estate Services Division
Project Management & Development Branch
707 Third Street, Suite 4-105
West Sacramento, California 95605

NICHOLS MELBURG & ROSSETTO
ARCHITECTS + ENGINEERS
300 Knollcrest Drive
Redding, CA. 96002
(530) 222-3300 (530) 222-3538 FAX
http://www.nmrdesign.com

Copyright © 2019
All ideas, designs, arrangements and plans indicated or represented by this drawing are owned by, and the property of, NICHOLS, MELBURG and ROSSETTO and were created, evolved and developed for use on, and in conjunction with, the specified project. None of such ideas, designs, arrangements or plans shall be used by, or disclosed to any person, firm or corporation for any purpose whatsoever without the written permission of NICHOLS, MELBURG and ROSSETTO.

LICENSE STAMPS

REGISTERED PROFESSIONAL ENGINEER
M 33498
EXPIRES 9/30/22
MECHANICAL
STATE OF CALIFORNIA
DATE SIGNED: 10-20-20

CONSULTANT

CAPITAL
ENGINEERING CONSULTANTS, INC.
RANCHO CORDOVA, CALIFORNIA
JD - HC/JH — PM - DESIGN TEAM
181205.00 — PROJECT NO.

DRAWING STATUS
CONSTRUCTION DOCUMENTS

ISSUE

No.	Date	Description
1	10/22/2020	INITIAL PLAN REVIEW
2	01/22/2021	AGENCY RESUBMITTAL
3	03/22/2021	AGENCY RESUBMITTAL

If drawing is not 30" x 42" it is a reduced print

PROJECT
RESIDENTIAL CENTER, UKIAH: REPLACEMENT OF EXISTING RESIDENTIAL CENTER
440 EAST HILL ROAD
WILLITS, CALIFORNIA 95490
MENDOCINO COUNTY
CALIFORNIA CONSERVATION CORP

Supervisor	Designed	Drawn
		Author

DSA Application No.
02-118630

SHEET TITLE
EDUCATION BLDG
HVAC PLENUM PLAN

DGS Project Number: 0000000000001826
NMR Project Number: 18-6456

Reference North: NORTH
Sheet Scale: 1/4" = 1'-0"
Sheet Number: M202E

ISSUE DATE
July 9, 2021

SHEET NOTES:

1. SEE 2/M400 FOR VRF REFRIGERANT PIPING DIAGRAM & SIZES.
2. SEE "SPLIT SYSTEM OUTDOOR UNIT SCHEDULE" ON M003 FOR SPLIT SYSTEM REFRIGERANT LINE SIZES.
3. INDIVIDUAL REFRIGERANT PIPES ARE NOT MODELED. RECTANGULAR SHAPES ON FLOOR PLAN INDICATE PIPE GROUPINGS WITH MULTIPLE REFRIGERANT PIPES ROUTED TOGETHER. SHOWN FOR SPACE COORDINATION AND NOT TO REPRESENT ANY PIPING ENCLOSURE.

1 M301E EDUCATION BLDG HVAC PIPING FLOOR PLAN

SCALE: 1/4" = 1'-0"

Plot Date: 3/16/2021 1:29:26 PM
File Name: L:\Revit Local Files\CEC_DGS CCC Willits_ED_MP18_Central_jdvoa\KT147.rvt

IDENTIFICATION STAMP
DIV. OF THE STATE ARCHITECT
APP: 02-118630 INC:
REVIEWED FOR
SS ☐ FLS ☐ ACS ☑
DATE: 04/13/2021

OFFICE OF THE STATE FIRE MARSHAL
APPROVED FIRE AND PANIC ONLY
Approval of this plan does not authorize or approve any omission or deviation from applicable regulations. Final approval is subject to field inspection. One set of approved plans shall be available on the project site at all times.
PERMIT NO. 20-N-2332-CP
REVIEWED BY: LEO CATAYLO, OSFM
DATE: 4/1/2021

GENERAL SERVICES
Department of General Services
State of California
Real Estate Services Division
Project Management & Development Branch
707 Third Street, Suite 4-105
West Sacramento, California 95605

NICHOLS MELBURG & ROSSETTO
ARCHITECTS + ENGINEERS
300 Knollcrest Drive
Redding, CA. 96002
(530) 222-3300 (530) 222-3538 FAX
http://www.nmrdesign.com

Copyright © 2019
All ideas, designs, arrangements and plans indicated or represented by this drawing are owned by, and the property of, NICHOLS, MELBURG and ROSSETTO and were created, evolved and developed for use on, and in conjunction with, the specified project. None of such ideas, designs, arrangements or plans shall be used by, or disclosed to any person, firm or corporation for any purpose whatsoever without the written permission of NICHOLS, MELBURG and ROSSETTO.

LICENSE STAMPS

REGISTERED PROFESSIONAL ENGINEER
M 33498
EXPIRES 9/30/22
MECHANICAL
STATE OF CALIFORNIA
DATE SIGNED: 10-20-20

CONSULTANT

CAPITAL
ENGINEERING CONSULTANTS, INC.
RANCHO CORDOVA, CALIFORNIA
JD - HCJH — PM - DESIGN TEAM
181205.00 — PROJECT NO.

DRAWING STATUS
CONSTRUCTION DOCUMENTS

ISSUE

No.	Date	Description
1	10/22/2020	INITIAL PLAN REVIEW
2	01/22/2021	AGENCY RESUBMITTAL
3	03/22/2021	AGENCY RESUBMITTAL

If drawing is not 30" x 42" it is a reduced print

PROJECT
RESIDENTIAL CENTER, UKIAH: REPLACEMENT OF EXISTING RESIDENTIAL CENTER
440 EAST HILL ROAD
WILLITS, CALIFORNIA 95490
MENDOCINO COUNTY
CALIFORNIA CONSERVATION CORP

Supervisor	Designed	Drawn
		Author

DSA Application No.
02-118630

SHEET TITLE
EDUCATION BLDG HVAC PIPING FLOOR PLAN

DGS Project Number: 0000000000001826
NMR Project Number: 18-6456

Reference North
Sheet Scale: 1/4" = 1'-0"
Sheet Number: M301E

ISSUE DATE
July 9, 2021

STATE OF CALIFORNIA
Mechanical Systems
NRCC-MCH-E
CALIFORNIA ENERGY COMMISSION

CERTIFICATE OF COMPLIANCE			NRCC-MCH-E
This document is used to demonstrate compliance for mechanical systems that are within the scope of the permit application and are demonstrating compliance using the prescriptive path outlined in §140.4, or §141.0(b)2 for alterations .			
Project Name:	CCC Willits - Education Building	**Report Page:**	**(Page 1 of 11)**
Project Address:		**Date Prepared:**	9/3/2020

A. GENERAL INFORMATION

01	Project Location (city)	Willits	04	Total Conditioned Floor Area	5530
02	Climate Zone	2	05	Total Unconditioned Floor Area	62
03	Occupancy Types Within Project:		06	# of Stories (Habitable Above Grade)	1
☒ Office (B)		☐ Retail (M)	☐ Non-refrigerated Warehouse (S)		
☐ Hotel/ Motel Guest Rooms (R-1)		☐ School (E)	☐ Healthcare Facility (H)		
☐ High-Rise Residential (R-2/R-3)		☐ Relocatable Class Bldg (E)	☒ Other (write in)		See Table J

B. PROJECT SCOPE

This table Includes mechanical systems or components that are within the scope of the permit application and are demonstrating compliance using the prescriptive path outlined in §140.4, or §141.0(b)2 for alterations .

01	02	03
Air System(s)	Wet System Components	Dry System Components
☒ Heating Air System	☐ Water Economizer	☐ Air Economizer
☒ Cooling Air System	☐ Pumps	☐ Electric Resistance Heat
Mechanical Controls	☐ System Piping	☒ Fan Systems
☒ Mechanical Controls	☐ Cooling Towers	☐ Ductwork
	☐ Chillers	☒ Ventilation
	☐ Boilers	☐ Zonal Systems/ Terminal Boxes

Registration Number: Registration Date/Time: Registration Provider: Energysoft
CA Building Energy Efficiency Standards - 2019 Nonresidential Compliance Report Version: 2019.0.001 Schema Version: rev 20190401 Report Generated: 2020-09-03 16:20:44

STATE OF CALIFORNIA
Mechanical Systems
NRCC-MCH-E
CALIFORNIA ENERGY COMMISSION

CERTIFICATE OF COMPLIANCE			NRCC-MCH-E
Project Name:	CCC Willits - Education Building	**Report Page:**	**(Page 2 of 11)**
Project Address:		**Date Prepared:**	9/3/2020

C. COMPLIANCE RESULTS

Table C will indicate if the project data input into the compliance document is compliant with mechanical requirements. This table is not editable by the user. If this table says "DOES NOT COMPLY" or "COMPLIES with Exceptional Conditions" refer to Table D., or the table indicated as not compliant for guidance.

01		02		03		04		05		06		07		08	09
System Summary §110.1, §110.2, §140.4	AND	Pumps §140.4(k)	AND	Fans/ Economizers §140.4(c), §140.4(e)	AND	System Controls §110.2, §120.2, §140.4(f)	AND	Ventilation §120.1	AND	Terminal Box Controls §140.4(d)	AND	Distribution §120.3, §140.4(l)	AND	Cooling Towers §110.2(e)2	Compliance Results
(See Table F)		(See Table G)		(See Table H)		(See Table I)		(See Table J)		(See Table K)		(See Table L)		(See Table M)	
Yes	AND		AND	Yes	AND	Yes	AND	Yes	AND		AND		AND		COMPLIES
Mandatory Measures Compliance (See Table Q for Details)										COMPLIES					

D. EXCEPTIONAL CONDITIONS

This table is auto-filled with uneditable comments because of selections made or data entered in tables throughout the form.

E. ADDITIONAL REMARKS

This table includes remarks made by the permit applicant to the Authority Having Jurisdiction.

Registration Number: Registration Date/Time: Registration Provider: Energysoft
CA Building Energy Efficiency Standards - 2019 Nonresidential Compliance Report Version: 2019.0.001 Schema Version: rev 20190401 Report Generated: 2020-09-03 16:20:44

STATE OF CALIFORNIA
Mechanical Systems
NRCC-MCH-E
CALIFORNIA ENERGY COMMISSION

CERTIFICATE OF COMPLIANCE			NRCC-MCH-E
Project Name:	CCC Willits - Education Building	**Report Page:**	**(Page 3 of 11)**
Project Address:		**Date Prepared:**	9/3/2020

F. HVAC SYSTEM SUMMARY (DRY & WET SYSTEMS)

This table is used to demonstrate compliance for mechanical equipment with mandatory requirements found in §110.1 and §110.2(a) and prescriptive requirements found in §140.4(a), §140.4(b) and §140.4(k) or §141.0(b)2 for alterations.

Dry System Equipment Sizing (includes air conditioners, condensers, heat pumps, VRF, furnaces and unit heaters)

01	02	03	04	05	06	07	08	09	10	11
				Equipment Sizing per Mechanical Schedule (Btu/h) §140.4 (a&b)						
				Heating Output[2,3]			Cooling Output[2,3]		Load Calculations[3,4]	
Name or Item Tag	Equipment Category per Tables 110.2	Equipment Type per Tables 110.2 & Title 20	Smallest Size Available[1] §140.4(a)	Per Design (kBtu/h)	Rated (kBtu/h)	Supp. Heating Output (kBtu/h)	Sensible Per Design (kBtu/h)	Rated (kBtu/h)	Total Heating Load	Total Sensible Cooling Load
HP-E-1	Variable Refrigerant Flow	VRF heat pump, air cooled	Yes	142251	178756	0	189466	194640	66682	123840
SAC-E-1	Unitary AC/ Condensers	AC, air cooled, split (1 phase)	Yes	0	0	0	19543	21200	587	1747

[1]*FOOTNOTES: Equipment shall be the smallest size, within the available options of the desired equipment line, necessary to meet the design heating and cooling loads of the building per §140.4(a). Healthcare facilities are excepted.*
[2]*It is common practice to show rated output capacity on the equipment schedule. Sensible cooling output comes from specification sheet tables.*
[3] *If equipment is heating only, leave cooling output and load blank. If equipment is cooling only, leave heating output and load blank.*
[4] *Authority Having Jurisdiction may ask for load calculations used for compliance per §140.4(b).*

Dry System Equipment Efficiency (other than Package Terminal Air Conditioners (PTAC) and Package Terminal Heat Pumps (PTHP))

01	02	03	04	05	06	07	08	09
		Heating Mode				Cooling Mode		
Name or Item Tag	Size Category (Btu/h)	Rating Condition (°F)	Efficiency Unit	Minimum Efficiency Required per Tables 110.2 / Title 20	Design Efficiency	Efficiency Unit	Minimum Efficiency Required per Tables 110.2 / Title 20	Design Efficiency
HP-E-1	135,000 and 240,000	47 Fdb/ 43 Fwb OSA	COP	3.2	3.7	EER IEER	10.6 13.9	12.6 20.4
SAC-E-1	65,000					SEER	14.0	18

Registration Number: Registration Date/Time: Registration Provider: Energysoft
CA Building Energy Efficiency Standards - 2019 Nonresidential Compliance Report Version: 2019.0.001 Schema Version: rev 20190401 Report Generated: 2020-09-03 16:20:44

STATE OF CALIFORNIA
Mechanical Systems
NRCC-MCH-E
CALIFORNIA ENERGY COMMISSION

CERTIFICATE OF COMPLIANCE			NRCC-MCH-E
Project Name:	CCC Willits - Education Building	**Report Page:**	**(Page 4 of 11)**
Project Address:		**Date Prepared:**	9/3/2020

G. PUMPS

This section does not apply to this project.

H. FAN SYSTEMS & AIR ECONOMIZERS

This table is used to demonstrate compliance with prescriptive requirements found in §140.4(c), §140.4(e) and §140.4(m) for fan systems. Fan systems serving healthcare facilities, or those serving only process loads, are exempt from these requirements and do not need to be included in Table H.

System Name:	HP-E-1	**Economizer:**[1]	Differential Temperature	**Economizer Controls:**	Designed per and (m)	**System Fan Type:**	Fixed Flow
01	02	03	04	05	06	07	08
						Fan Power Pressure Drop Adjustment - Table 140.4-B	
Fan Name or Item Tag	Fan Function	Qty	Maximum Design Supply Airflow (CFM)	HP Unit[2]	Design HP	Device	Design Airflow through Device (CFM)
VRF	Other (Transfer, VAV box)	1	5500	BHP	0.04		
VRF	Other (Transfer, VAV box)	1	0	BHP	0.04		
VRF	Other (Transfer, VAV box)	1	0	BHP	0.04		
VRF	Other (Transfer, VAV box)	1	0	BHP	0.02		
VRF	Other (Transfer, VAV box)	1	0	BHP	0.02		
VRF	Other (Transfer, VAV box)	1	0	BHP	0.02		
VRF	Other (Transfer, VAV box)	1	0	BHP	0.05		
VRF	Other (Transfer, VAV box)	1	0	BHP	0.02		
EF	Exhaust	1	0	BHP	0.05		
VRF	Other (Transfer, VAV box)	1	0	BHP	0.02		
VRF	Other (Transfer, VAV box)	1	0	BHP	0.02		
VRF	Other (Transfer, VAV box)	1	0	BHP	0.02		
VRF	Other (Transfer, VAV box)	1	0	BHP	0.02		
Total System Design Supply Airflow (CFM):			5500	Total System Design (B)HP:	0.41	**Maximum System Fan Power (B)HP:**	0.66

Registration Number: Registration Date/Time: Registration Provider: Energysoft
CA Building Energy Efficiency Standards - 2019 Nonresidential Compliance Report Version: 2019.0.001 Schema Version: rev 20190401 Report Generated: 2020-09-03 16:20:44

STATE OF CALIFORNIA
Mechanical Systems
NRCC-MCH-E
CALIFORNIA ENERGY COMMISSION

CERTIFICATE OF COMPLIANCE			NRCC-MCH-E
Project Name:	CCC Willits - Education Building	**Report Page:**	**(Page 5 of 11)**
Project Address:		**Date Prepared:**	9/3/2020

H. FAN SYSTEMS & AIR ECONOMIZERS

System Name:	SAC-E-1	**Economizer:**[1]	NA: 54 kBtu/h cooling	**Economizer Controls:**	Designed per and (m)	**System Fan Type:**	Fixed Flow
01	02	03	04	05	06	07	08
						Fan Power Pressure Drop Adjustment - Table 140.4-B	
Fan Name or Item Tag	Fan Function	Qty	Maximum Design Supply Airflow (CFM)	HP Unit[2]	Design HP	Device	Design Airflow through Device (CFM)
SF	Supply	1	700	BHP	0.05		
Total System Design Supply Airflow (CFM):			700	Total System Design (B)HP:	0.05	**Maximum System Fan Power (B)HP:**	0.66

[1] *FOOTNOTES: Computer room economizers must meet requirements of §140.9(a) and will be documented on the NRCC-PRC-E document.*
[2] *If total filter pressure drop (SPa) is greater than 1 in WC, or 245 Pascal then enter it and total fan pressure drop across the fan (SPf) for system.*

I. SYSTEM CONTROLS

This table is used to demonstrate compliance with mandatory controls in §110.2 and §120.2 and prescriptive controls in §140.4(f) and (n) or requirements in §141.0(b)2E for altered space conditioning systems.

01	02	03	04	05	06	07	08	09
System Name	System Zoning	Conditioned Floor Area Being Served (ft^2)	Thermostats §110.2(b) & (c)[1], §120.2(a)or §141.0(b)2E	Shut-Off Controls §120.2(e)	Isolation Zone Controls §120.2(g)	Demand Response §120.2(b)	Supply Air Temp. Reset §140.4(f)	Window Interlocks per §140.4(n)
HP-E-1	Multi-zone w/ DDC to zone	<= 25,000 ft^2	Setback	Auto Timer Switch	4 Hour Timer	EMCS	Included	Provided
SAC-E-1	Single zone	<= 25,000 ft^2	Setback	Auto Timer Switch	4 Hour Timer	EMCS	Included	Provided

[1]*FOOTNOTES: Gravity gas wall heaters, gravity floor heaters, gravity room heaters, non-central electric heaters, fireplaces or decorative gas appliances, wood stoves are not required to have setback thermostats.*
*Notes: Controls with a * require a note in the space below explaining how compliance is achieved. EX: system 1: SA Temp Reset: Exempt because zones compliant with §140.4(d) ; EXCEPTION 1 to §140.4(f)

Registration Number: Registration Date/Time: Registration Provider: Energysoft
CA Building Energy Efficiency Standards - 2019 Nonresidential Compliance Report Version: 2019.0.001 Schema Version: rev 20190401 Report Generated: 2020-09-03 16:20:44

STATE OF CALIFORNIA
Mechanical Systems
NRCC-MCH-E
CALIFORNIA ENERGY COMMISSION

CERTIFICATE OF COMPLIANCE			NRCC-MCH-E
Project Name:	CCC Willits - Education Building	**Report Page:**	**(Page 6 of 11)**
Project Address:		**Date Prepared:**	9/3/2020

J. VENTILATION AND INDOOR AIR QUALITY

This table is used to demonstrate compliance with mandatory ventilation requirements in §120.1 and §120.2(e)3B for all nonresidential, high-rise residential and hotel/motel occupancies. For alterations, only ventialtion systems being altered within the scope of the permit application need to be documented in this table. In lieu of this table, the required outdoor ventilation rates and airflows may be shown on the plans or the calculations can be presented in a spreadsheet.

01	☐	Check the box if the project is showing ventilation calculations on the plans, or attaching the calculations instead of completing this table.
02	☐	Check this box if the project included new or altered high-rise residential dwelling units.
03	☐	Check the box if the project is using natural ventilation in any nonresidential or hotel/motel spaces to meet required ventilation rates per §120.1(c)2.

Nonresidential and Hotel/ Motel Ventilation Systems

	04	05		06		07
System Name	HP-E-1	System Design OA CFM Airflow[1]	1170.75	System Design Transfer Air CFM	0	Air Filtration per §120.1(c) and §141.0(b)2 [2] / Provided per §120.1(c) (NR and Hotel/Motel))

08	09	10	11	12	13	14	15	16	
	Mechanical Ventilation Required per §120.1(c)3 [3]					Exh. Vent per §120.1(c)4		DCV or Sensor Controls per §120.1(d)3, §120.1(d)5, and §120.1(e)3 [6]	
Space Name ot item Tag	Occupancy Type[4]	Conditioned Floor Area (ft^2)	# of Shower heads/ toilets	# of people[5]	Required Min OA CFM	Required Min CFM	Provided per Design CFM		
FCU-E-1	All others	597			226.9	0	0	DCV	NA: Not required per §120.1(d)3
								Occ Sensor	
FCU-E-2	All others	597			226.9	0	0	DCV	NA: Not required per §120.1(d)3
								Occ Sensor	
FCU-E-3	All others	666			253.1	0	0	DCV	NA: Not required per §120.1(d)3
								Occ Sensor	
FCU-E-4	Office space	123			18.4	0	0	DCV	NA: Not required per §120.1(d)3
								Occ Sensor	

Registration Number: Registration Date/Time: Registration Provider: Energysoft
CA Building Energy Efficiency Standards - 2019 Nonresidential Compliance Report Version: 2019.0.001 Schema Version: rev 20190401 Report Generated: 2020-09-03 16:20:44

STATE OF CALIFORNIA
Mechanical Systems
NRCC-MCH-E
CALIFORNIA ENERGY COMMISSION

CERTIFICATE OF COMPLIANCE			NRCC-MCH-E
Project Name:	CCC Willits - Education Building	**Report Page:**	**(Page 7 of 11)**
Project Address:		**Date Prepared:**	9/3/2020

J. VENTILATION AND INDOOR AIR QUALITY

FCU-E-5	Office space	123			18.4	0	0	DCV	NA: Not required per §120.1(d)3
								Occ Sensor	
FCU-E-6	Office space	117			17.6	0	0	DCV	NA: Not required per §120.1(d)3
								Occ Sensor	
FCU-E-7	Computer Lab	667			100	0	0	DCV	NA: Not required per §120.1(d)3
								Occ Sensor	
FCU-E-8	Corridor Transition	1186			177.9	0	150	DCV	NA: Not required per §120.1(d)3
								Occ Sensor	
FCU-E-9	Toilet, public	486			0	0	0	DCV	NA: Not required per §120.1(d)3
								Occ Sensor	
FCU-E-10	All others	605			90.8	0	0	DCV	NA: Not required per §120.1(d)3
								Occ Sensor	
FCU-E-11	Office space	127			19	0	0	DCV	NA: Not required per §120.1(d)3
								Occ Sensor	
FCU-E-12	Office space	145			21.8	0	0	DCV	NA: Not required per §120.1(d)3
								Occ Sensor	

	04	05		06		07
System Name	SAC-E-1	System Design OA CFM Airflow[1]	0	System Design Transfer Air CFM	0	Air Filtration per §120.1(c) and §141.0(b)2 [2] / Provided per §120.1(c) (NR and Hotel/Motel))

08	09	10	11	12	13	14	15	16

Registration Number: Registration Date/Time: Registration Provider: Energysoft
CA Building Energy Efficiency Standards - 2019 Nonresidential Compliance Report Version: 2019.0.001 Schema Version: rev 20190401 Report Generated: 2020-09-03 16:20:44

STATE OF CALIFORNIA
Mechanical Systems
NRCC-MCH-E
CALIFORNIA ENERGY COMMISSION

CERTIFICATE OF COMPLIANCE			NRCC-MCH-E
Project Name:	CCC Willits - Education Building	**Report Page:**	**(Page 8 of 11)**
Project Address:		**Date Prepared:**	9/3/2020

J. VENTILATION AND INDOOR AIR QUALITY

Space Name ot item Tag	Mechanical Ventilation Required per §120.1(c)3 [3]					Exh. Vent per §120.1(c)4		DCV or Sensor Controls per §120.1(d)3, §120.1(d)5, and §120.1(e)3 [6]	
	Occupancy Type[4]	Conditioned Floor Area (ft^2)	# of Shower heads/ toilets	# of people[5]	Required Min OA CFM	Required Min CFM	Provided per Design CFM		
SAC-E-1	All others	91			0	0	0	DCV	NA: Not required per §120.1(d)3
								Occ Sensor	

[1] *FOOTNOTES: System CFM should include both mechanical and natural ventilation for the zone/system*
[2] *Air filtration requirements apply to the following three system types per §120.1(c)1A : space conditioning systems utilizing ducts to supply air to occupiable space; supply-only ventilation systems providing outside air to occupiable space; supply side of balanced ventilation systems including heat recovery and energy recovery ventilation systems providing outside air to occupiable space.*
[3] *Uniform Mechanical Code may have more stringent ventilation requirements; the most stringent code requirement takes precedence.*
[4] *See Standards Tables 120.1-A and 120.1-B.*
[5] *For lecture halls with fixed seating, the expected number of occupants shall be shall be determined in accordance with the California Building Code.*
[6] *§120.2(e)3 requires systems serving rooms that are required by §130.1(c) to have lighting occupancy sensing controls to also have occupancy sensing zone controls for ventilation. Examples of spaces which require lighting occupancy sensors include offices 250ft^2 or smaller, multipurpose rooms less than 1,000 ft^2, classrooms, conference rooms, restrooms, aisles and open areas in warehouses, library book stack aisles, corridors, stairwells, parking garages, and loading and unloading zones, unless excepted by §130.1(c).*

K. TERMINAL BOX CONTROLS

This section does not apply to this project.

L. DISTRIBUTION (DUCTWORK and PIPING)

This section does not apply to this project.

M. COOLING TOWERS

This section does not apply to this project.

Registration Number: Registration Date/Time: Registration Provider: Energysoft
CA Building Energy Efficiency Standards - 2019 Nonresidential Compliance Report Version: 2019.0.001 Schema Version: rev 20190401 Report Generated: 2020-09-03 16:20:44

STATE OF CALIFORNIA
Mechanical Systems
NRCC-MCH-E
CALIFORNIA ENERGY COMMISSION

CERTIFICATE OF COMPLIANCE			NRCC-MCH-E
Project Name:	CCC Willits - Education Building	**Report Page:**	**(Page 9 of 11)**
Project Address:		**Date Prepared:**	9/3/2020

N. DECLARATION OF REQUIRED CERTIFICATES OF INSTALLATION

Selections have been made based on information provided in previous tables of this document. If any selection needs to be changed, please explain why in Table E Additional Remarks. These documents must be provided to the building inspector during construction and can be found online at https://www.energy.ca.gov/title24/2019standards/2019_compliance_documents/Nonresidential_Documents/NRCI/

Yes	No	Form/Title	Field Inspector Pass	Field Inspector Fail
●	○	NRCI-MCH-01-E - Must be submitted for all buildings	☐	☐

O. DECLARATION OF REQUIRED CERTIFICATES OF ACCEPTANCE

Selections have been made based on information provided in previous tables of this document. If any selection needs to be changed, please explain why in Table E Additional Remarks. These documents must be provided to the building inspector during construction and can be found online at https://www.energy.ca.gov/title24/2019standards/2019_compliance_documents/Nonresidential_Documents/NRCA/

Yes	No	Form/Title	Field Inspector Pass	Field Inspector Fail
●	○	NRCA-MCH-02-A - Outdoor Air must be submitted for all newly installed HVAC units. Note: MCH-02-A can be performed in conjunction with MCH-07-A Supply Fan VFD Acceptance (if applicable) since testing activities overlap.	☐	☐
●	○	NRCA-MCH-03-A - Constant Volume Single Zone HVAC NOTE: This form does not automatically move to "Yes'. If Constant Volume Single Zone HVAC Systems are included in the scope, permit applicant should move this form to "Yes".	☐	☐
○	●	NRCA-MCH-04-A - Air Distribution Duct Leakage	☐	☐
○	●	NRCA-MCH-05-A - Air Economizer Controls	☐	☐
○	●	NRCA-MCH-06-A Demand Control Ventilation Systems must be submitted for all systems required to employ demand controlled ventilation (refer to §120.1(c)3) can vary outside ventilation flow rates based on maintaining interior carbon dioxide (CO_2) concentration setpoints.	☐	☐
○	●	NRCA-MCH-07-A Supply Fan Variable Flow Controls	☐	☐
○	●	NRCA-MCH-08-A Valve Leakage Test	☐	☐
○	●	NRCA-MCH-09-A Supply Water Temperature Reset Controls	☐	☐
○	●	NRCA-MCH-10-A Hydronic System Variable Flow Controls	☐	☐
●	○	NRCA-MCH-11-A Automatic Demand Shed Controls	☐	☐
○	●	NRCA-MCH-12-A FDD for Packaged Direct Expansion Units	☐	☐
○	●	NRCA-MCH-13-A Automatic FDD for Air Handling Units and Zone Terminal Units Acceptance	☐	☐

Registration Number: Registration Date/Time: Registration Provider: Energysoft
CA Building Energy Efficiency Standards - 2019 Nonresidential Compliance Report Version: 2019.0.001 Schema Version: rev 20190401 Report Generated: 2020-09-03 16:20:44

IDENTIFICATION STAMP
DIV. OF THE STATE ARCHITECT
APP: 02-118630 INC:
REVIEWED FOR
SS ☐ FLS ☐ ACS ☑
DATE: 04/13/2021

OFFICE OF THE STATE FIRE MARSHAL
APPROVED FIRE AND PANIC ONLY
Approval of this plan does not authorize or approve any omission or deviation from applicable regulations. Final approval is subject to field inspection. One set of approved plans shall be available on the project site at all times.
PERMIT NO.: 20-N-2332-CP
REVIEWED BY: LITO CATAYLO, OSFM
DATE: 4/1/2021

GENERAL SERVICES
Department of General Services
State of California
Real Estate Services Division
Project Management & Development Branch
707 Third Street, Suite 4-105
West Sacramento, California 95605

NICHOLS MELBURG & ROSSETTO
ARCHITECTS + ENGINEERS
300 Knollcrest Drive
Redding, CA. 96002
(530) 222-3300 (530) 222-3538 FAX
http://www.nmrdesign.com

Copyright © 2019
All ideas, designs, arrangements and plans indicated or represented by this drawing are owned by, and the property of, NICHOLS, MELBURG and ROSSETTO and were created, evolved and developed for use on, and in conjunction with, the specified project. None of such ideas, designs, arrangements or plans shall be used by, or disclosed to any person, firm or corporation for any purpose whatsoever without the written permission of NICHOLS, MELBURG and ROSSETTO.

LICENSE STAMPS
REGISTERED PROFESSIONAL ENGINEER
M 33498
EXPIRES 9/30/22
MECHANICAL
STATE OF CALIFORNIA
DATE SIGNED: 10-20-20

CONSULTANT
CAPITAL
ENGINEERING CONSULTANTS, INC.
RANCHO CORDOVA, CALIFORNIA
JD - HC/JH — PM - DESIGN TEAM
181205.00 — PROJECT NO.

DRAWING STATUS
CONSTRUCTION DOCUMENTS

ISSUE

No.	Date	Description
1	10/22/2020	INITIAL PLAN REVIEW
2	01/22/2021	AGENCY RESUBMITTAL
3	03/22/2021	AGENCY RESUBMITTAL

If drawing is not 30" x 42" it is a reduced print

PROJECT
RESIDENTIAL CENTER, UKIAH: REPLACEMENT OF EXISTING RESIDENTIAL CENTER
440 EAST HILL ROAD
WILLITS, CALIFORNIA 95490
MENDOCINO COUNTY
CALIFORNIA CONSERVATION CORP

Supervisor | Designed | Drawn: Author

DSA Application No.
02-118630

SHEET TITLE
EDUCATION BLDG
TITLE 24 COMPLIANCE

DGS Project Number: 000000000001826
NMR Project Number: 18-6456

Sheet Scale

Sheet Number
M401E

ISSUE DATE
July 9, 2021

Plot Date: 3/19/2021 1:28:27 PM
File Name: L:\Revit Local Files\CECI_DGS CCC Willits_ED_MP18_Central_jduvalKTH47.rvt

STATE OF CALIFORNIA
Mechanical Systems
NRCC-MCH-E
CALIFORNIA ENERGY COMMISSION

CERTIFICATE OF COMPLIANCE			NRCC-MCH-E
Project Name:	CCC Willits - Education Building	**Report Page:**	(Page 10 of 11)
Project Address:		**Date Prepared:**	9/3/2020

O. DECLARATION OF REQUIRED CERTIFICATES OF ACCEPTANCE

○	●	NRCA-MCH-14-A Distributed Energy Storage DX AC Systems Acceptance NOTE: This form does not automatically move to "Yes". If Distributed Energy System DX AC Systems are included in teh scope permit applicant should move this form to "Yes".	☐	☐
○	●	NRCA-MCH-15-A Thermal Energy Storage (TES) System Acceptance NOTE: This form does not automatically move to "Yes". If Chilled water Storage, Ice-on-Coil Internal Melt, Ice-on-Coil External melt, Ice Harvester, Brine, Ice-Slurry, Eutecti Salt, Clathrate Hydrate Slurry (CHS), Cryogenic or Encapsulated (Ice Ball) Systems are included in the scope, permit applicant should move this form to 'Yes".	☐	☐
○	●	NRCA-MCH-16-A Supply Air Temperature Reset Controls	☐	☐
○	●	NRCA-MCH-17-A Condenser Water Temperature Reset Controls	☐	☐
○	●	NRCA-MCH-18-A Energy Management Control Systems	☐	☐
○	●	NRCA-MCH-19-A Occupancy Sensor Controls	☐	☐
○	●	NRCA-MCH-20 Multi-Family Ventilation	☐	☐
○	●	NRCA-MCH-21 Multi-Family Envelope Leakage	☐	☐

P. DECLARATION OF REQUIRED CERTIFICATES OF VERIFICATION

Selections have been made based on information provided in previous tables of this document. If any selection needs to be changed, please explain why in Table E Additional Remarks. These documents must be completed by a HERS Rater and provided to the building inspector during construction. The finsl documents must be creted by a HERS Providrs registry, but drafts can be found online at https://www.energy.ca.gov/title24/2019standards/2019_compliance_documents/Nonresidential_Documents/NRCV/

Yes	No	Form/Title	Field Inspector Pass	Field Inspector Fail
○	●	NRCV-MCH-04-H Duct Leakaage Test *NOTE: Must be completed by a HERS Rater*	☐	☐
○	●	NRCV-MCH-24 Enclosure Air Leakaage Worksheet *NOTE: Must be completed by a HERS Rater*	☐	☐
○	●	NRCV-MCH-27 High-rise Resdential *NOTE: Must be completed by a HERS Rater*	☐	☐
○	●	NRCV-MCH-32 Local Mechanical Exhaust *NOTE: Must be completed by a HERS Rater*	☐	☐

Q. MANDATORY MEASURES DOCUMENTATION LOCATION

This table is used to indicate where mandatory measures are documented in the plan set or construction documentation.

01		02
		Plan sheet or construction document location
Compliance with Mandatory Measures documented through MCH Mandatory Measures Note Block[1]	Yes	M-Sheets

STATE OF CALIFORNIA
Mechanical Systems
NRCC-MCH-E
CALIFORNIA ENERGY COMMISSION

CERTIFICATE OF COMPLIANCE			NRCC-MCH-E
Project Name:	CCC Willits - Education Building	**Report Page:**	(Page 11 of 11)
Project Address:		**Date Prepared:**	9/3/2020

DOCUMENTATION AUTHOR'S DECLARATION STATEMENT

I certify that this Certificate of Compliance documentation is accurate and complete.

Documentation Author Name: Jessica Hughey	Documentation Author Signature:
Company: Capital Engineering Consultants Inc.	Signature Date: 10/20/2020
Address: 11020 Sun Center Dr. Suite 100	CEA/ HERS Certification Identification (if applicable):
City/State/Zip: Rancho Cordova CA 95670	Phone: (916) 850-3500

RESPONSIBLE PERSON'S DECLARATION STATEMENT

I certify the following under penalty of perjury, under the laws of the State of California:
1. The information provided on this Certificate of Compliance is true and correct.
2. I am eligible under Division 3 of the Business and Professions Code to accept responsibility for the building design or system design identified on this Certificate of Compliance (responsible designer)
3. The energy features and performance specifications, materials, components, and manufactured devices for the building design or system design identified on this Certificate of Compliance conform to the requirements of Title 24, Part 1 and Part 6 of the California Code of Regulations.
4. The building design features or system design features identified on this Certificate of Compliance are consistent with the information provided on other applicable compliance documents, worksheets, calculations, plans and specifications submitted to the enforcement agency for approval with this building permit application.
5. I will ensure that a completed signed copy of this Certificate of Compliance shall be made available with the building permit(s) issued for the building, and made available to the enforcement agency for all applicable inspections. I understand that a completed signed copy of this Certificate of Compliance is required to be included with the documentation the builder provides to the building owner at occupancy.

Responsible Designer Name: Kevin D. Stillman	Responsible Designer Signature:
Company: Capital Engineering Consultants, Inc.	Date Signed: 2020-09-03
Address: 11020 Sun Center Dr. Suite 100	License: M 33498
City/State/Zip: Rancho Cordova CA 95670	Phone:

STATE OF CALIFORNIA
Domestic Water Heating System
NRCC-PLB-E
CALIFORNIA ENERGY COMMISSION

CERTIFICATE OF COMPLIANCE NRCC-PLB-E

This document is used to demonstrate compliance for nonresidential occupancies with requirements in §110.1, §110.3, §120.3, and §140.5, and with requirements in §141.0 for additions and alterations, for domestic water heating scopes using the prescriptive path. For high-rise residential and hotel/motel occupancies compliance is demonstrated with requirements in §110.1, §110.3, §120.3, §150.0 and §150.1(c)8, and with requirements §150.2 for additions.

Project Name:	CCC Willits - Education Building	**Report Page:**	(Page 1 of 7)
Project Address:		**Date Prepared:**	9/3/2020

A. GENERAL INFORMATION

01	Project Location (city)	Willits	02 Climate Zone	2
03	Occupancy Types Within Project (select all that apply):			
☒ Nonresidential		☐ High-Rise Residential	☐ Hotel/Motel	
☐ State Building		☐ Healthcare Facility	☐ Other (Write In)	

B. PROJECT SCOPE

This table includes domestic water heating systems that are within the scope of the permit application and are demonstrating compliance using the prescriptive paths outlined in §140.5, §150.1(c)8, and §141.0(a), or §141.0(b)2N for additions or alterations. Solar water heating systems are documented on the NRCC-SRA compliance document. Combined hydronic water heating systems are documented on the NRCC-MCH compliance document.

01	02	03		
My project consists of (check all that apply):	System Type[1,2]	System Components		
☒ New system (DHW system being installed for the first time in newly constructed building)	Individual System (serving nonresidential spaces)	☒ Equipment	☒ Distribution	☒ Controls
☐ System Alteration (equipment, distribution or controls)		☐ Equipment	☐ Distribution	☐ Controls

[1]*FOOTNOTES: Point of use water heaters, or other non-central systems used to serve nonresidential spaces, are considered individual systems.*
[2] *Dwelling units refers to hotel/motel guest rooms and units in a high-rise residential occupancy.*

STATE OF CALIFORNIA
Domestic Water Heating System
NRCC-PLB-E
CALIFORNIA ENERGY COMMISSION

CERTIFICATE OF COMPLIANCE			NRCC-PLB-E
Project Name:	CCC Willits - Education Building	**Report Page:**	(Page 2 of 7)
Project Address:		**Date Prepared:**	9/3/2020

C. COMPLIANCE RESULTS

Table C will indicate if the project data input into the compliance document is compliant with water heating requirements. If this table says "DOES NOT COMPLY" or "COMPLIES with Exceptional Conditions" refer to Table D. or the table indicated as not compliant for guidance.

01	02	03	04
Domestic Hot Water Equipment	Distribution Systems	Controls	**Compliance Results**
Table F	Table G	Table H	
Yes	Yes	Yes	COMPLIES

D. EXCEPTIONAL CONDITIONS

This table is auto-filled with uneditable comments because of selections made or data entered in tables throughout the form.

E. ADDITIONAL REMARKS

This table is includes remarks made by the permit applicant to the Authority Having Jurisdiction.

STATE OF CALIFORNIA
Domestic Water Heating System
NRCC-PLB-E
CALIFORNIA ENERGY COMMISSION

CERTIFICATE OF COMPLIANCE			NRCC-PLB-E
Project Name:	CCC Willits - Education Building	**Report Page:**	(Page 3 of 7)
Project Address:		**Date Prepared:**	9/3/2020

F. DOMESTIC HOT WATER EQUIPMENT

This table is used to demonstrate compliance with mandatory equipment requirements in §110.1 and §110.3. For high-rise residential and hotel/motel occupancies, compliance with prescriptive requirements in §150.1(c)8 must also be demonstrated and with §150.2 for addition and alteration scopes.

Equipment Schedule: Individual Systems

01	02	03	04	05	06
Name or Item Tag	Equipment Type	Volume (gal)	Max GPM/ First Hour Rating (FHR)	Rated Uniform Energy Factor (UEF)	Minimum Required Uniform Energy Factor (UEF)[1]
Instantaneous Electric	Electric Storage	<=2	FHR >=75	0.98	0

[1]*FOOTNOTE: Compliant equipment may be found in the Modernized Appliance Efficiency Database System (MAEDBS) on the Energy Commission website: https://cacertappliances.energy.ca.gov/Pages/Search/AdvancedSearch.aspx*

Water Heating Equipment All Occupancies

	Yes	No	Not Applicable	Requirement
18	☐	☐	☒	Unfired storage tank insulation shall have Internal + External >=R-16 OR External >=R-12. Label required per §110.3(c)3
19	☐	☐	☒	New state buildings 60% of energy for service water heating from site solar energy or recovered energy per §110.3(c)5
20	☐	☐	☒	Isolation valves for instantaneous water heater with input rating <6.8 kBTUH or 2 kW has been specified per §110.3(c)6

STATE OF CALIFORNIA
Domestic Water Heating System
NRCC-PLB-E
CALIFORNIA ENERGY COMMISSION

CERTIFICATE OF COMPLIANCE			NRCC-PLB-E
Project Name:	CCC Willits - Education Building	**Report Page:**	(Page 4 of 7)
Project Address:		**Date Prepared:**	9/3/2020

G. DOMESTIC HOT WATER DISTRIBUTION SYSTEM

This table is used to demonstrate compliance for nonresidential occupancies with distribution requirements in §120.3 and §140.5. For high-rise residential and hotel/motel occupancies, compliance is demonstrated with requirements §110.3(c), §120.3, §150.0, §150.1

Mandatory Pipe Insulation All Occupancies

12	☒	For systems serving nonresidential spaces, pipe insulation for the following applications is specified to comply with Table 120.3-A (see below) per §120.3 : • Recirculating system piping, including supply and return piping of the water heater • The first 8 ft of hot and cold outlet piping, including between storage tank and heat trap, for a nonrecirculating storage system • Pipes that are externally heated
13	☒	Insulation shall be protected from damage, including that due to sunlight, moisture, equipment maintenance, and wind. Insulation exposed to weather shall be installed with a cover suitable for outdoor service per §120.3(b) and §150.0(j)3

TABLE 120.3-A PIPE INSULATION THICKNESS

Fluid Temperature Range (°F)	Conductivity Range (Btu-in per hour per ft² per °F)	Insulation Mean Rating Temp (°F)	Nominal Pipe Diameter (in) < 1	1 to < 1.5	1.5 to < 4
			Minimum Insulation Required		
105-140	0.22 - 0.28	100	1.0 in or R-7.7	1.5 in or R-12.5	1.5 in or R-11

STATE OF CALIFORNIA
Domestic Water Heating System
NRCC-PLB-E
CALIFORNIA ENERGY COMMISSION

CERTIFICATE OF COMPLIANCE			NRCC-PLB-E
Project Name:	CCC Willits - Education Building	**Report Page:**	(Page 5 of 7)
Project Address:		**Date Prepared:**	9/3/2020

H. DOMESTIC HOT WATER CONTROLS

This table is used to demonstrate compliance with control requirements in §110.3 for all occupancies. For high-rise residential and hotel/motel occupancies, compliance is also demonstrated with requirements in §150.1(c)8.

	Yes	No	Not Applicable	Requirement
01	☒	☐	☐	Construction documents require manufacturer certification that service water-heating systems are equipped with automatic temperature controls capable of adjusting temperature settings per §110.3(a).
02	☐	☐	☒	Systems with capacity > 167,000 BTUH equipped with outlet temperature controls per §110.3(c)1 unless covered by California Plumbing Code 613.0.
03	☐	☐	☒	Controls for circulating pumps or electrical heat trace systems are capable of automatically turning off the system per §110.3(c)2 unless systems serves healthcare facility.
04	☐	☐	☒	For recirculation systems serving multiple dwelling units, design includes automatic pump controls per §150.1(c)8Bii, or §150.2 for additions or alterations.
05	☐	☐	☒	For recirculation systems serving individual dwelling units, design includes manual on/off controls as specified in Reference Appendix RA4.4.9 per §150.1(c)8.
06	☐	☐	☒	For replacement single heat pump water heaters serving individual dwelling units in climate zone 1-15, design includes communication interface that meets demand responsive control requirements of §110.12(a) per §150.2(b)1Hiii.

I. DECLARATION OF REQUIRED CERTIFICATES OF INSTALLATION

Selections have been made based on information provided in this document. If any selection have been changed by permit applicant, an explanation should be included in Table E. Additional Remarks. These documents must be provided to the building inspector during construction and can be found online at https://www.energy.ca.gov/title24/2019standards/2019_compliance_documents/Nonresidential_Documents/NRCI/

Yes	No	Form/Title	Field Inspector Pass	Field Inspector Fail
●	○	NRCI-PLB-01-E - Must be submitted for all buildings	☐	☐
○	●	NRCI-PLB-02-E - Must be submitted for high-rise residential and hotel/motel central hot water distribution systems to be recognized for compliance.	☐	☐
○	●	NRCI-PLB-03-E - Must be submitted for high-rise residential and hotel/motel single dwelling unit hot water distribution systems to be recognized for compliance.	☐	☐

STATE OF CALIFORNIA
Domestic Water Heating System
NRCC-PLB-E
CALIFORNIA ENERGY COMMISSION

CERTIFICATE OF COMPLIANCE			NRCC-PLB-E
Project Name:	CCC Willits - Education Building	**Report Page:**	(Page 6 of 7)
Project Address:		**Date Prepared:**	9/3/2020

J.DECLARATION OF REQUIRED CERTIFICATES OF ACCEPTANCE

There are no Certificates of Acceptance applicable to service water heating requirements.

K. DECLARATION OF REQUIRED CERTIFICATES OF VERIFICATION

Selections have been made based on information provided in this document. If any selection have been changed by permit applicant, an explanation should be included in Table E. Additional Remarks. These documents must be completed by a HERS Rater and provided to the building inspector during construction. The final documents must be created by a HERS Providers registry, but drafts can be found online at https://www.energy.ca.gov/title24/2019standards/2019_compliance_documents/Nonresidential_Documents/NRCI/

Yes	No	Form/Title	Field Inspector Pass	Field Inspector Fail
○	●	NRCV-PLB-21-H High-rise Residential Central Hot Water Distribution HERS Verification	☐	☐
○	●	NRCV-PLB-22-H High-rise Residential Individual Dwelling Unit Hot Water Distribution HERS Verification	☐	☐

STATE OF CALIFORNIA
Domestic Water Heating System
NRCC-PLB-E
CALIFORNIA ENERGY COMMISSION

CERTIFICATE OF COMPLIANCE			NRCC-PLB-E
Project Name:	CCC Willits - Education Building	**Report Page:**	(Page 7 of 7)
Project Address:		**Date Prepared:**	9/3/2020

DOCUMENTATION AUTHOR'S DECLARATION STATEMENT

I certify that this Certificate of Compliance documentation is accurate and complete.

Documentation Author Name: Jessica Hughey	Documentation Author Signature:
Company: Capital Engineering Consultants Inc.	Signature Date: 10/20/2020
Address: 11020 Sun Center Dr. Suite 100	CEA/ HERS Certification Identification (if applicable):
City/State/Zip: Rancho Cordova CA 95670	Phone: (916) 850-3500

RESPONSIBLE PERSON'S DECLARATION STATEMENT

I certify the following under penalty of perjury, under the laws of the State of California:
1. The information provided on this Certificate of Compliance is true and correct.
2. I am eligible under Division 3 of the Business and Professions Code to accept responsibility for the building design or system design identified on this Certificate of Compliance (responsible designer)
3. The energy features and performance specifications, materials, components, and manufactured devices for the building design or system design identified on this Certificate of Compliance conform to the requirements of Title 24, Part 1 and Part 6 of the California Code of Regulations.
4. The building design features or system design features identified on this Certificate of Compliance are consistent with the information provided on other applicable compliance documents, worksheets, calculations, plans and specifications submitted to the enforcement agency for approval with this building permit application.
5. I will ensure that a completed signed copy of this Certificate of Compliance shall be made available with the building permit(s) issued for the building, and made available to the enforcement agency for all applicable inspections. I understand that a completed signed copy of this Certificate of Compliance is required to be included with the documentation the builder provides to the building owner at occupancy.

Responsible Designer Name: Kevin D. Stillman	Responsible Designer Signature:
Company: Capital Engineering Consultants, Inc.	Date Signed: 2020-09-03
Address: 11020 Sun Center Dr. Suite 100	License: M 33498
City/State/Zip: Rancho Cordova CA 95670	Phone:

IDENTIFICATION STAMP
DIV. OF THE STATE ARCHITECT
APP: 02-118630 INC:
REVIEWED FOR
SS ☐ FLS ☐ ACS ☑
DATE: 04/13/2021

OFFICE OF THE STATE FIRE MARSHAL
APPROVED FIRE AND PANIC ONLY
Approval of this plan does not authorize or approve any omission or deviation from applicable regulations. Final approval is subject to field inspection. One set of approved plans shall be available on the project site at all times.
PERMIT NO.: 20-N-2332-CP
REVIEWED BY: LITO CATAYLO, OSFM
DATE: 4/1/2021

GENERAL SERVICES
Department of General Services
State of California
Real Estate Services Division
Project Management & Development Branch
707 Third Street, Suite 4-105
West Sacramento, California 95605

NICHOLS MELBURG & ROSSETTO
ARCHITECTS + ENGINEERS
300 Knollcrest Drive
Redding, CA. 96002
(530) 222-3300 (530) 222-3538 FAX
http://www.nmrdesign.com

Copyright © 2019
All ideas, designs, arrangements and plans indicated or represented by this drawing are owned by, and the property of, NICHOLS, MELBURG and ROSSETTO and were created, evolved and developed for use on, and in conjunction with, the specified project. None of such ideas, designs, arrangements or plans shall be used by, or disclosed to any person, firm or corporation for any purpose whatsoever without the written permission of NICHOLS, MELBURG and ROSSETTO.

LICENSE STAMPS
REGISTERED PROFESSIONAL ENGINEER
KEVIN D. STILLMAN
M 33498
EXPIRES 9/30/22
MECHANICAL
STATE OF CALIFORNIA
DATE SIGNED: 10-20-20

CONSULTANT
CAPITAL ENGINEERING CONSULTANTS, INC.
RANCHO CORDOVA, CALIFORNIA
JD - HC/JH — PM - DESIGN TEAM
181205.00 — PROJECT NO.

DRAWING STATUS
CONSTRUCTION DOCUMENTS

ISSUE

No.	Date	Description
1	10/22/2020	INITIAL PLAN REVIEW
2	01/22/2021	AGENCY RESUBMITTAL
3	03/22/2021	AGENCY RESUBMITTAL

If drawing is not 30" x 42" it is a reduced print

PROJECT
RESIDENTIAL CENTER, UKIAH: REPLACEMENT OF EXISTING RESIDENTIAL CENTER
440 EAST HILL ROAD
WILLITS, CALIFORNIA 95490
MENDOCINO COUNTY
CALIFORNIA CONSERVATION CORP

Supervisor	Designed	Drawn
		Author

DSA Application No.
02-118630

SHEET TITLE
EDUCATION BLDG
TITLE 24 COMPLIANCE

DGS Project Number 000000000001826
NMR Project Number 18-6456
Sheet Scale
Sheet Number
M402E
ISSUE DATE
July 9, 2021

Plot Date: 3/19/2021 1:28:29 PM
File Name: L:\Revit Local Files\CECI_DGS CCC Willits_ED_MP18_Central_jduvalKTH47.rvt

REFRIGERANT CONCENTRATION CALC

SYSTEM	REFRIGERANT		DESIGN ROOM FLOOR AREA [SQ FT]	DESIGN ROOM CLG HEIGHT [FT]	DESIGN ROOM VOLUME [CU FT]	CONCENTRATION [LBS / 1000 CF]	
	TYPE	CHARGE [LBS]				DESIGN	LIMIT
HP/R-1	R-410A	25.8	206	10'-0"	2,060	12.5	26

NOTES:

1. DESIGN REFRIGERANT CHARGE IS CALCULATED USING BASIS OF DESIGN EQUIPMENT MANUFACTURER'S CATALOG DATA FOR FACTORY PRE-CHARGE AND ADDITIONAL CHARGE FOR ASSUMED LINE LENGTHS. INSTALLING CONTRACTOR SHALL PROVIDE UPDATED CALCULATIONS BASED ON ACTUAL REFRIGERANT CHARGE AND MAKE THEM AVAILABLE FOR REVIEW BY FIELD INSPECTOR OR OTHER AGENCIES.
2. CONCENTRATION LIMITS ARE TAKEN FROM 2019 CALIFORNIA MECHANICAL CODE TABLE 1102.3.

KEYNOTES:

1 PROVIDE WINDOW SENSOR AT OPERABLE WINDOW, FOR INTERLOCK WITH FAN COIL, SEE 1/M601.

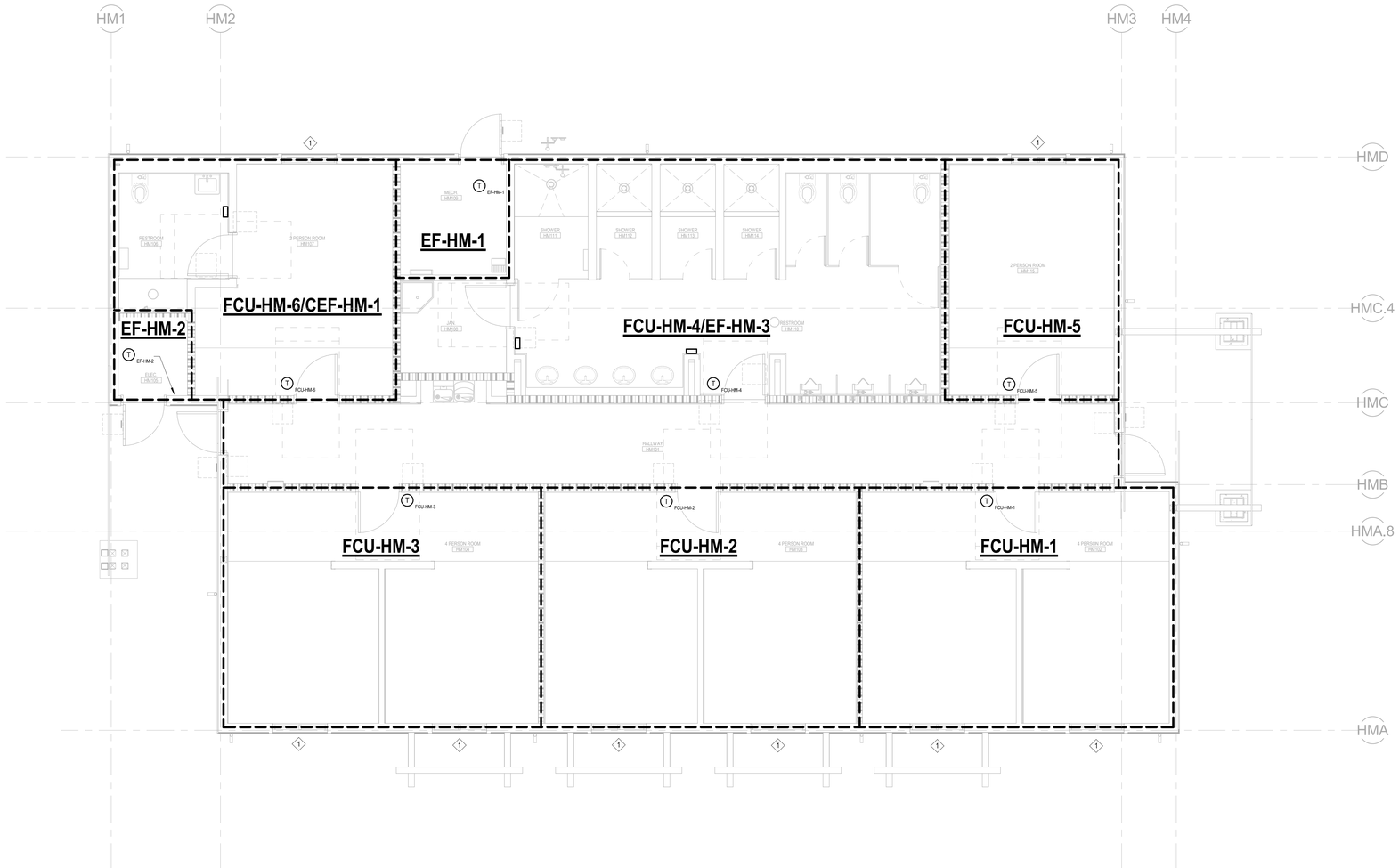

1 M101HM MEN'S HOUSING HVAC ZONE PLAN

SCALE: 1/4" = 1'-0"

Plot Date: 3/16/2021 1:27:17 PM
File Name: L:\Revit Local Files\EDCI_DGS CCC Willits_Dorm_Men_MP18_Central_jduvall\KTH47.rvt

IDENTIFICATION STAMP
DIV. OF THE STATE ARCHITECT
APP: 02-118630 INC:
REVIEWED FOR
SS ☐ FLS ☐ ACS ☑
DATE: 04/13/2021

OFFICE OF THE STATE FIRE MARSHAL
APPROVED FIRE AND PANIC ONLY
Approval of this plan does not authorize or approve any omission or deviation from applicable regulations. Final approval is subject to field inspection. One set of approved plans shall be available on the project site at all times.
PERMIT NO.: 20-N-2332-CP
REVIEWED BY: LEO CATAYLO, OSFM
DATE: 4 / /2021

GENERAL SERVICES
Department of General Services
State of California
Real Estate Services Division
Project Management & Development Branch
707 Third Street, Suite 4-105
West Sacramento, California 95605

NICHOLS MELBURG & ROSSETTO
ARCHITECTS + ENGINEERS
300 Knollcrest Drive
Redding, CA. 96002
(530) 222-3300 (530) 222-3538 FAX
http://www.nmrdesign.com

Copyright © 2019
All ideas, designs, arrangements and plans indicated or represented by this drawing are owned by, and the property of, NICHOLS, MELBURG and ROSSETTO and were created, evolved and developed for use on, and in conjunction with, the specified project. None of such ideas, designs, arrangements or plans shall be used by, or disclosed to any person, firm or corporation for any purpose whatsoever without the written permission of NICHOLS, MELBURG and ROSSETTO.

LICENSE STAMPS

REGISTERED PROFESSIONAL ENGINEER
KEVIN T. DUVALL
M 33498
EXPIRES 9/30/22
MECHANICAL
STATE OF CALIFORNIA
DATE SIGNED: 10-20-20

CONSULTANT

CAPITAL
ENGINEERING CONSULTANTS, INC.
RANCHO CORDOVA, CALIFORNIA
JD - HCJH — PM - DESIGN TEAM
181205.00 — PROJECT NO.

DRAWING STATUS
CONSTRUCTION DOCUMENTS

ISSUE

No.	Date	Description
1	10/22/2020	INITIAL PLAN REVIEW
2	01/22/2021	AGENCY RESUBMITTAL
3	03/22/2021	AGENCY RESUBMITTAL

If drawing is not 30" x 42" it is a reduced print

PROJECT
RESIDENTIAL CENTER, UKIAH: REPLACEMENT OF EXISTING RESIDENTIAL CENTER
440 EAST HILL ROAD
WILLITS, CALIFORNIA 95490
MENDOCINO COUNTY
CALIFORNIA CONSERVATION CORP

Supervisor	Designed	Drawn
		Author

DSA Application No.
02-118630

SHEET TITLE
MEN'S HOUSING HVAC ZONE PLAN

DGS Project Number: 0000000000001826
NMR Project Number: 18-6456

Reference North
Sheet Scale: As indicated
Sheet Number: M101HM

ISSUE DATE
July 9, 2021

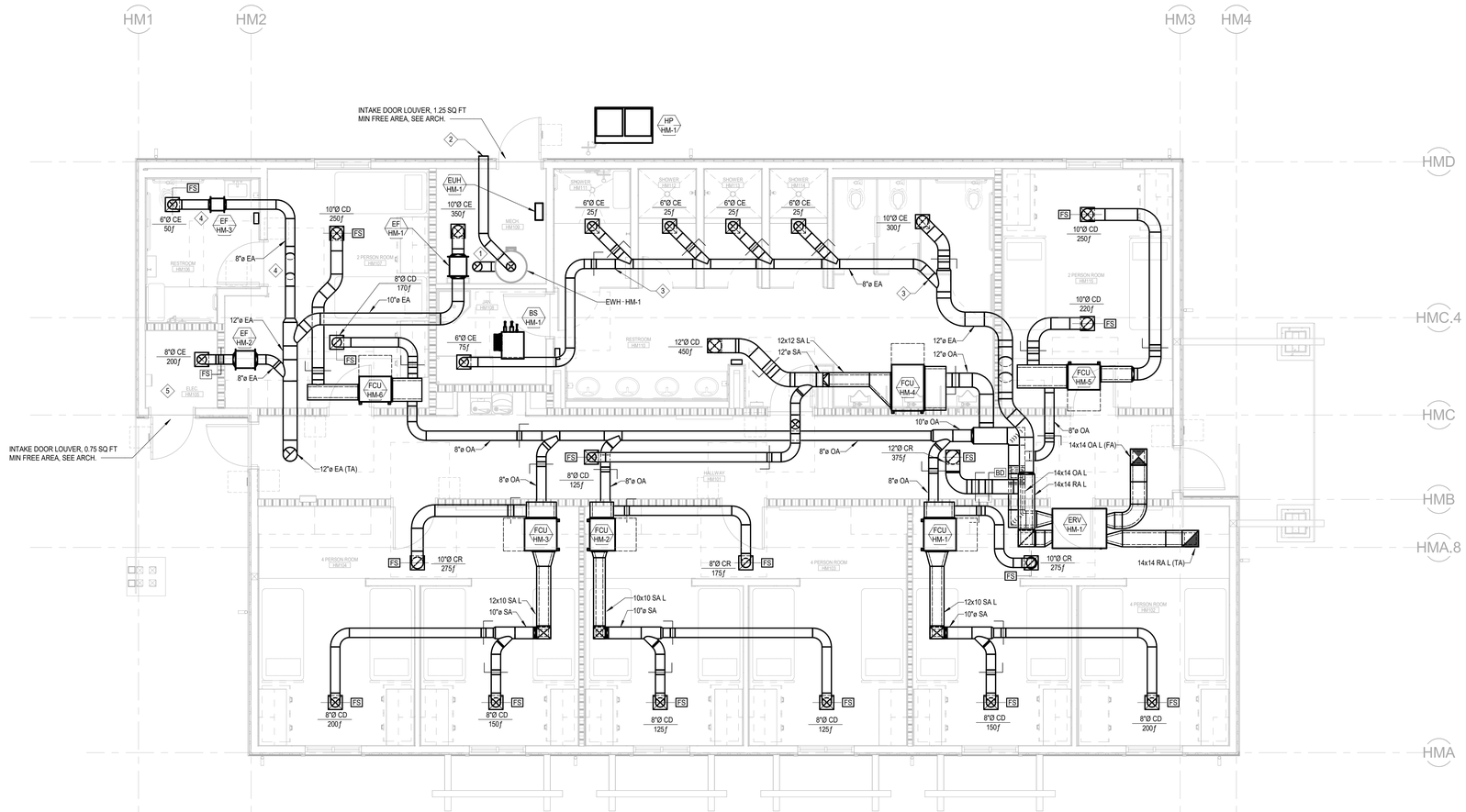

1 M201HM MEN'S HOUSING HVAC FLOOR PLAN

SCALE: 1/4" = 1'-0"

SHEET NOTES:

1. SEE M001 FOR TABLE OF BRANCH DUCT SIZES TO INDIVIDUAL DIFFUSERS, GRILLES & REGISTERS. SIZE SUPPLY AND RETURN AIR DUCT PLENUMS ENTERING AND LEAVING FAN COILS TO MATCH SIZE OF DUCT CONNECTIONS AT FAN COILS. LINE DUCT AS INDICATED ON PLANS.
2. SEE 1/M501 FOR MOUNTING OF COMBINATION FIRE SMOKE DAMPERS.

KEYNOTES:

1. CONNECT WITH 8"Ø DUCT TO WATER HEATER EXHAUST AIR OUTLET WITH MANUFACTURER'S DUCT KIT AND INSTALL MANUFACTURER'S BOOSTER FAN IN VERTICAL DUCT SECTION BELOW ROOF TERMINATION.
2. CONNECT WITH 8"Ø DUCT TO WATER HEATER AIR INLET WITH MANUFACTURER'S DUCT KIT, TERMINATE DUCT AT EXTERIOR WALL WITH GREENHECK 'WC-8' WALL CAP.
3. EXHAUST DUCT, INCLUDING ALL BRANCHES, BETWEEN KEYNOTE LOCATIONS SHALL BE ALUMINUM CONSTRUCTION.
4. EXHAUST BRANCH SERVING SHOWER ROOM SHALL BE ALUMINUM CONSTRUCTION.
5. ELECTRICAL POWER METER, PROVIDED BY BAS CONTRACTOR. COORDINATE LOCATION AND INSTALLATION WITH DIV 26. SEE 2/M604 AND 1/M600.

IDENTIFICATION STAMP
DIV. OF THE STATE ARCHITECT
APP: 02-118630 INC:
REVIEWED FOR
SS ☐ FLS ☐ ACS ☑
DATE: 04/13/2021

OFFICE OF THE STATE FIRE MARSHAL
APPROVED FIRE AND PANIC ONLY
Approval of this plan does not authorize or approve any omission or deviation from applicable regulations. Final approval is subject to field inspection. One set of approved plans shall be available on the project site at all times.
PERMIT NO. 20-N-2332-CP
REVIEWED BY: LEO CATAYLO, OSFM
DATE: 4 / /2021

GENERAL SERVICES
Department of General Services
State of California
Real Estate Services Division
Project Management & Development Branch
707 Third Street, Suite 4-105
West Sacramento, California 95605

NICHOLS MELBURG & ROSSETTO
ARCHITECTS + ENGINEERS
300 Knollcrest Drive
Redding, CA. 96002
(530) 222-3300 (530) 222-3538 FAX
http://www.nmrdesign.com

Copyright © 2019
All ideas, designs, arrangements and plans indicated or represented by this drawing are owned by, and the property of, NICHOLS, MELBURG and ROSSETTO and were created, evolved and developed for use on, and in conjunction with, the specified project. None of such ideas, designs, arrangements or plans shall be used by, or disclosed to any person, firm or corporation for any purpose whatsoever without the written permission of NICHOLS, MELBURG and ROSSETTO

LICENSE STAMPS

REGISTERED PROFESSIONAL ENGINEER
KEVIN S. DAVIS
M 33498
EXPIRES 9/30/22
MECHANICAL
STATE OF CALIFORNIA
DATE SIGNED: 10-20-20

CONSULTANT

CAPITAL
ENGINEERING CONSULTANTS, INC.
RANCHO CORDOVA, CALIFORNIA
JD - HC/JH — PM - DESIGN TEAM
181205.00 — PROJECT NO.

DRAWING STATUS
CONSTRUCTION DOCUMENTS

ISSUE

No.	Date	Description
1	10/22/2020	INITIAL PLAN REVIEW
2	01/22/2021	AGENCY RESUBMITTAL
3	03/22/2021	AGENCY RESUBMITTAL

If drawing is not 30" x 42" it is a reduced print

PROJECT
RESIDENTIAL CENTER, UKIAH: REPLACEMENT OF EXISTING RESIDENTIAL CENTER
440 EAST HILL ROAD
WILLITS, CALIFORNIA 95490
MENDOCINO COUNTY
CALIFORNIA CONSERVATION CORP

Supervisor	Designed	Drawn
		Author

DSA Application No.
02-118630

SHEET TITLE
MEN'S HOUSING HVAC FLOOR PLAN

DGS Project Number	NMR Project Number
0000000000001826	18-6456

Reference North — Sheet Scale 1/4" = 1'-0"
Sheet Number M201HM

ISSUE DATE
July 9, 2021

Plot Date: 3/19/2021 1:27:23 PM
File Name: J:\Revit Local Files\CEQ_DGS CCC Willits_Dorm_Men_MP18_Central_jdavaKTH47.rvt

KEYNOTES:

1. PROVIDE DUCT PLENUM CONNECTION TO LOUVER. SIZED TO MATCH LOUVER DIMENSIONS.

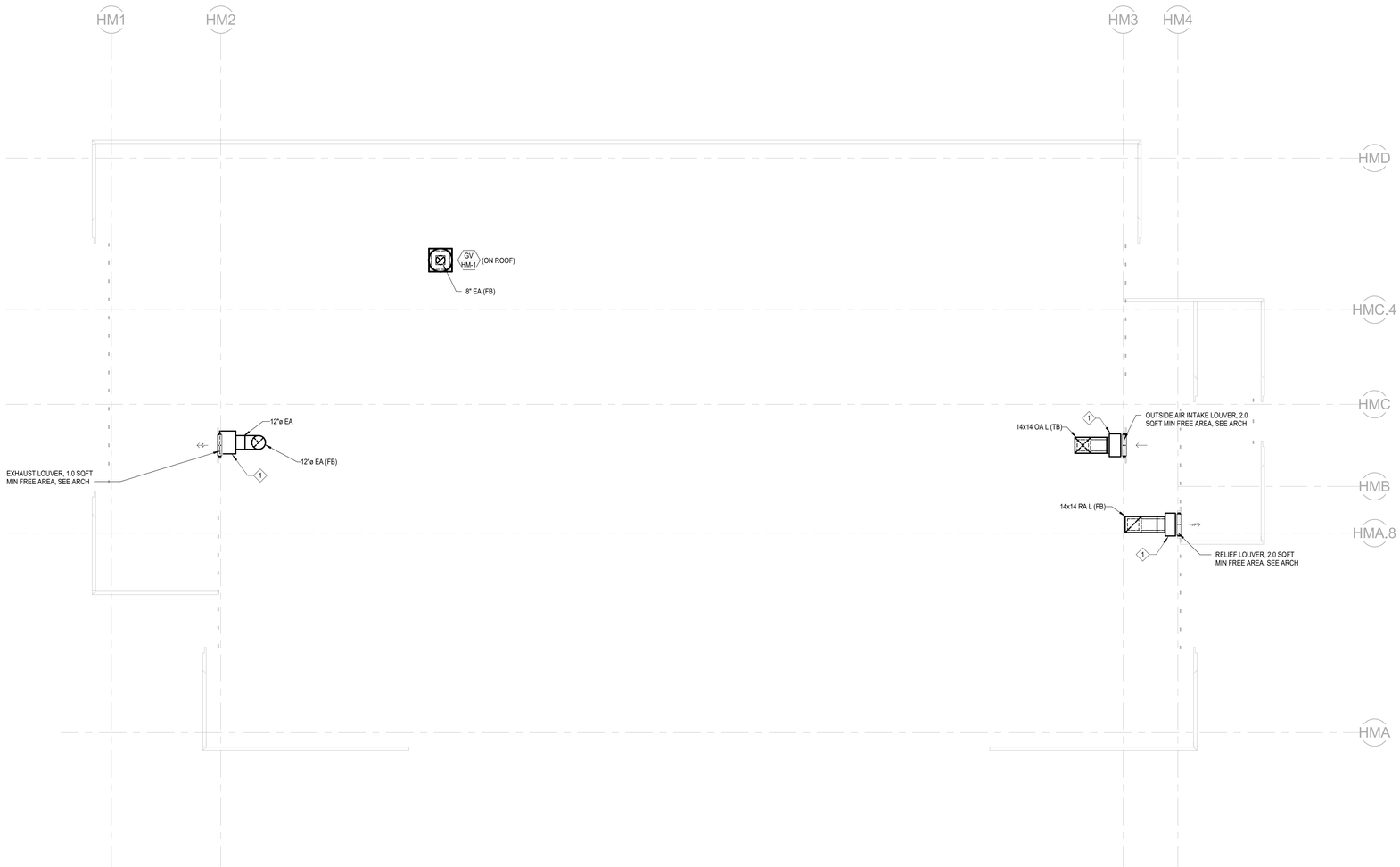

1 M202HM MEN'S HOUSING HVAC PLENUM PLAN

SCALE: 1/4" = 1'-0"

Plot Date: 3/16/2021 1:27:21 PM
File Name: L:\Revit Local Files\21ECI_DGS CCC Willits_Dorm_Men_MP18_Central_jdvnaRKTH47.rvt

IDENTIFICATION STAMP
DIV. OF THE STATE ARCHITECT
APP: 02-118630 INC:
REVIEWED FOR
SS ☐ FLS ☐ ACS ☑
DATE: 04/13/2021

OFFICE OF THE STATE FIRE MARSHAL
APPROVED FIRE AND PANIC ONLY
Approval of this plan does not authorize or approve any omission or deviation from applicable regulations. Final approval is subject to field inspection. One set of approved plans shall be available on the project site at all times.
PERMIT NO. 20-N-2332-CP
REVIEWED BY: LEO CATAYLO, OSFM
DATE: 4 / /2021

GENERAL SERVICES
Department of General Services
State of California
Real Estate Services Division
Project Management & Development Branch
707 Third Street, Suite 4-105
West Sacramento, California 95605

NICHOLS MELBURG & ROSSETTO
ARCHITECTS + ENGINEERS
300 Knollcrest Drive
Redding, CA. 96002
(530) 222-3300 (530) 222-3538 FAX
http://www.nmrdesign.com

Copyright © 2019
All ideas, designs, arrangements and plans indicated or represented by this drawing are owned by, and the property of, NICHOLS, MELBURG and ROSSETTO and were created, evolved and developed for use on, and in conjunction with, the specified project. None of such ideas, designs, arrangements or plans shall be used by, or disclosed to any person, firm or corporation for any purpose whatsoever without the written permission of NICHOLS, MELBURG and ROSSETTO.

LICENSE STAMPS

REGISTERED PROFESSIONAL ENGINEER
M 33498
EXPIRES 9/30/22
MECHANICAL
STATE OF CALIFORNIA
DATE SIGNED: 10-20-20

CONSULTANT

CAPITAL
ENGINEERING CONSULTANTS, INC.
RANCHO CORDOVA, CALIFORNIA
JD - HC/JH — PM - DESIGN TEAM
181205.00 — PROJECT NO.

DRAWING STATUS
CONSTRUCTION DOCUMENTS

ISSUE

No.	Date	Description
1	10/22/2020	INITIAL PLAN REVIEW
2	01/22/2021	AGENCY RESUBMITTAL
3	03/22/2021	AGENCY RESUBMITTAL

If drawing is not 30" x 42" it is a reduced print

PROJECT
RESIDENTIAL CENTER, UKIAH: REPLACEMENT OF EXISTING RESIDENTIAL CENTER
440 EAST HILL ROAD
WILLITS, CALIFORNIA 95490
MENDOCINO COUNTY
CALIFORNIA CONSERVATION CORP

Supervisor	Designed	Drawn
		Author

DSA Application No.
02-118630

SHEET TITLE
MEN'S HOUSING HVAC PLENUM PLAN

DGS Project Number: 0000000000001826
NMR Project Number: 18-6456

Reference North
Sheet Scale: 1/4" = 1'-0"
Sheet Number: M202HM

ISSUE DATE
July 9, 2021

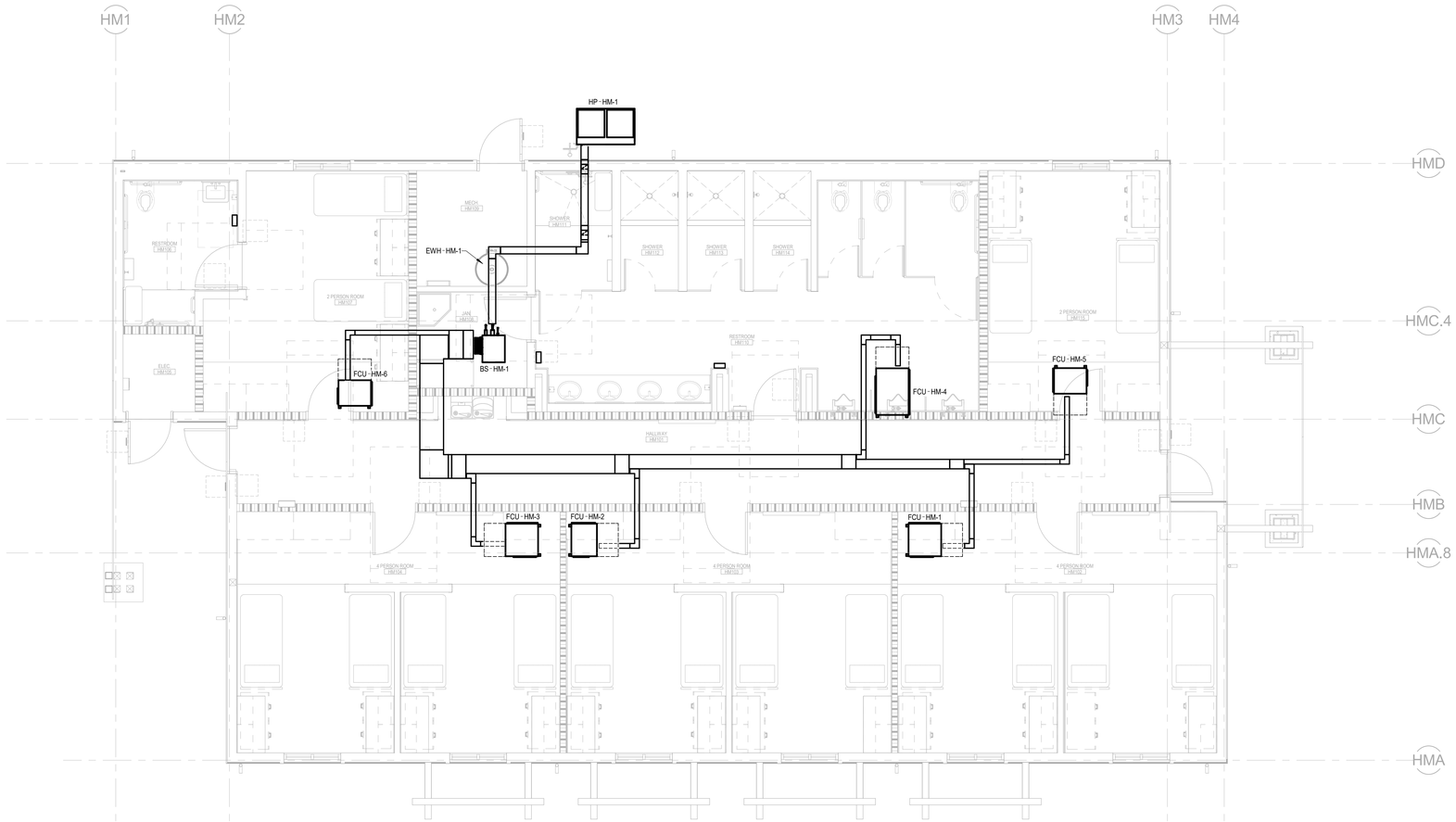

SHEET NOTES:

1. SEE 4/M400 FOR VRF REFRIGERANT PIPING DIAGRAM & SIZES.
2. INDIVIDUAL REFRIGERANT PIPES ARE NOT MODELED. RECTANGULAR SHAPES ON FLOOR PLAN INDICATE PIPE GROUPINGS WITH MULTIPLE REFRIGERANT PIPES ROUTED TOGETHER. SHOWN FOR SPACE COORDINATION AND NOT TO REPRESENT ANY PIPING ENCLOSURE.

1 M301HM MEN'S HOUSING HVAC PIPING FLOOR PLAN

SCALE: 1/4" = 1'-0"

Plot Date: 3/16/2021 1:27:24 PM
File Name: L:\Revit Local Files\ECI_DGS CCC Willits_Dorm_Men_MP18_Central_jdkvakKTH47.rvt

IDENTIFICATION STAMP
DIV. OF THE STATE ARCHITECT
APP: 02-118630 INC:
REVIEWED FOR
SS ☐ FLS ☐ ACS ☑
DATE: 04/13/2021

OFFICE OF THE STATE FIRE MARSHAL
APPROVED FIRE AND PANIC ONLY
Approval of this plan does not authorize or approve any omission or deviation from applicable regulations. Final approval is subject to field inspection. One set of approved plans shall be available on the project site at all times.
PERMIT NO. 20-N-2332-CP
REVIEWED BY: LEO CATAYLO, OSFM
DATE: 4 / /2021

GENERAL SERVICES
Department of General Services
State of California
Real Estate Services Division
Project Management & Development Branch
707 Third Street, Suite 4-105
West Sacramento, California 95605

NICHOLS MELBURG & ROSSETTO
ARCHITECTS + ENGINEERS
300 Knollcrest Drive
Redding, CA. 96002
(530) 222-3300 (530) 222-3538 FAX
http://www.nmrdesign.com

Copyright © 2019
All ideas, designs, arrangements and plans indicated or represented by this drawing are owned by, and the property of, NICHOLS, MELBURG and ROSSETTO and were created, evolved and developed for use on, and in conjunction with, the specified project. None of such ideas, designs, arrangements or plans shall be used by, or disclosed to any person, firm or corporation for any purpose whatsoever without the written permission of NICHOLS, MELBURG and ROSSETTO.

LICENSE STAMPS

REGISTERED PROFESSIONAL ENGINEER
KEVIN T. DAVIS
M 33498
EXPIRES 8/30/22
MECHANICAL
STATE OF CALIFORNIA
DATE SIGNED: 10-20-20

CONSULTANT

CAPITAL
ENGINEERING CONSULTANTS, INC.
RANCHO CORDOVA, CALIFORNIA
JD - HCJH — PM - DESIGN TEAM
181205.00 — PROJECT NO.

DRAWING STATUS
CONSTRUCTION DOCUMENTS

ISSUE

No.	Date	Description
1	10/22/2020	INITIAL PLAN REVIEW
2	01/22/2021	AGENCY RESUBMITTAL
3	03/22/2021	AGENCY RESUBMITTAL

If drawing is not 30" x 42" it is a reduced print

PROJECT
RESIDENTIAL CENTER, UKIAH: REPLACEMENT OF EXISTING RESIDENTIAL CENTER
440 EAST HILL ROAD
WILLITS, CALIFORNIA 95490
MENDOCINO COUNTY
CALIFORNIA CONSERVATION CORP

Supervisor	Designed	Drawn
		Author

DSA Application No.
02-118630

SHEET TITLE
MEN'S HOUSING HVAC PIPING FLOOR PLAN

DGS Project Number: 0000000000001826
NMR Project Number: 18-6456

Reference North: PROJECT NORTH
Sheet Scale: 1/4" = 1'-0"
Sheet Number: M301HM

ISSUE DATE
July 9, 2021

CERTIFICATE OF COMPLIANCE			NRCC-MCH-E
This document is used to demonstrate compliance for mechanical systems that are within the scope of the permit application and are demonstrating compliance using the prescriptive path outlined in §140.4, or §141.0(b)2 for alterations .			
Project Name:	CCC Willits - Men's Housing	**Report Page:**	(Page 1 of 10)
Project Address:		**Date Prepared:**	9/3/2020

A. GENERAL INFORMATION

01	Project Location (city)	Willits	04	Total Conditioned Floor Area	2560
02	Climate Zone	2	05	Total Unconditioned Floor Area	93
03	Occupancy Types Within Project:		06	# of Stories (Habitable Above Grade)	1
☐ Office (B)		☐ Retail (M)	☐ Non-refrigerated Warehouse (S)		
☐ Hotel/ Motel Guest Rooms (R-1)		☐ School (E)	☐ Healthcare Facility (H)		
☒ High-Rise Residential (R-2/R-3)		☐ Relocatable Class Bldg (E)	☒ Other (write in)		See Table J

B. PROJECT SCOPE

This table Includes mechanical systems or components that are within the scope of the permit application and are demonstrating compliance using the prescriptive path outlined in §140.4, or §141.0(b)2 for alterations .

01	02	03
Air System(s)	Wet System Components	Dry System Components
☒ Heating Air System	☐ Water Economizer	☐ Air Economizer
☒ Cooling Air System	☐ Pumps	☐ Electric Resistance Heat
Mechanical Controls	☐ System Piping	☒ Fan Systems
☒ Mechanical Controls	☐ Cooling Towers	☐ Ductwork
	☐ Chillers	☒ Ventilation
	☐ Boilers	☐ Zonal Systems/ Terminal Boxes

CERTIFICATE OF COMPLIANCE			NRCC-MCH-E
Project Name:	CCC Willits - Men's Housing	**Report Page:**	(Page 2 of 10)
Project Address:		**Date Prepared:**	9/3/2020

C. COMPLIANCE RESULTS

Table C will indicate if the project data input into the compliance document is compliant with mechanical requirements. This table is not editable by the user. If this table says "DOES NOT COMPLY" or "COMPLIES with Exceptional Conditions" refer to Table D., or the table indicated as not compliant for guidance.

01		02		03		04		05		06		07		08	09
System Summary §110.1, §110.2, §140.4	AND	Pumps §140.4(k)	AND	Fans/ Economizers §140.4(c), §140.4(e)	AND	System Controls §110.2, §120.2, §140.4(f)	AND	Ventilation §120.1	AND	Terminal Box Controls §140.4(d)	AND	Distribution §120.3, §140.4(l)	AND	Cooling Towers §110.2(e)2	Compliance Results
(See Table F)		(See Table G)		(See Table H)		(See Table I)		(See Table J)		(See Table K)		(See Table L)		(See Table M)	
Yes	AND		AND	Yes	AND	Yes	AND	Yes	AND		AND		AND		COMPLIES
Mandatory Measures Compliance (See Table Q for Details)										COMPLIES					

D. EXCEPTIONAL CONDITIONS

This table is auto-filled with uneditable comments because of selections made or data entered in tables throughout the form.

E. ADDITIONAL REMARKS

This table includes remarks made by the permit applicant to the Authority Having Jurisdiction.

CERTIFICATE OF COMPLIANCE			NRCC-MCH-E
Project Name:	CCC Willits - Men's Housing	**Report Page:**	(Page 3 of 10)
Project Address:		**Date Prepared:**	9/3/2020

F. HVAC SYSTEM SUMMARY (DRY & WET SYSTEMS)

This table is used to demonstrate compliance for mechanical equipment with mandatory requirements found in §110.1 and §110.2(a) and prescriptive requirements found in §140.4(a), §140.4(b) and §140.4(k) or §141.0(b)2 for alterations.

Dry System Equipment Sizing (includes air conditioners, condensers, heat pumps, VRF, furnaces and unit heaters)

01	02	03	04	05	06	07	08	09	10	11
Name or Item Tag	Equipment Category per Tables 110.2	Equipment Type per Tables 110.2 & Title 20	Smallest Size Available[1] §140.4(a)	Equipment Sizing per Mechanical Schedule (Btu/h) §140.4 (a&b)						
				Heating Output[2,3]			Cooling Output[2,3]		Load Calculations[3,4]	
				Per Design (kBtu/h)	Rated (kBtu/h)	Supp. Heating Output (kBtu/h)	Sensible Per Design (kBtu/h)	Rated (kBtu/h)	Total Heating Load	Total Sensible Cooling Load
HP-HM-1	Variable Refrigerant Flow	VRF heat pump, air cooled	Yes	59148	74327	0	64744	68057	21902	23014

[1]*FOOTNOTES: Equipment shall be the smallest size, within the available options of the desired equipment line, necessary to meet the design heating and cooling loads of the building per §140.4(a). Healthcare facilities are excepted.*
[2]*It is common practice to show rated output capacity on the equipment schedule. Sensible cooling output comes from specification sheet tables.*
[3] *If equipment is heating only, leave cooling output and load blank. If equipment is cooling only, leave heating output and load blank.*
[4] *Authority Having Jurisdiction may ask for load calculations used for compliance per §140.4(b).*

Dry System Equipment Efficiency (other than Package Terminal Air Conditioners (PTAC) and Package Terminal Heat Pumps (PTHP))

01	02	03	04	05	06	07	08	09
Name or Item Tag	Size Category (Btu/h)	Heating Mode				Cooling Mode		
		Rating Condition (˚F)	Efficiency Unit	Minimum Efficiency Required per Tables 110.2 / Title 20	Design Efficiency	Efficiency Unit	Minimum Efficiency Required per Tables 110.2 / Title 20	Design Efficiency
HP-HM-1	65,000 and 135,000	47 Fdb/ 43 Fwb OSA	COP	3.3	3.68	EER IEER	11.0 14.6	13.9 21.3

G. PUMPS

This section does not apply to this project.

CERTIFICATE OF COMPLIANCE			NRCC-MCH-E
Project Name:	CCC Willits - Men's Housing	**Report Page:**	(Page 4 of 10)
Project Address:		**Date Prepared:**	9/3/2020

H. FAN SYSTEMS & AIR ECONOMIZERS

This table is used to demonstrate compliance with prescriptive requirements found in §140.4(c), §140.4(e) and §140.4(m) for fan systems. Fan systems serving healthcare facilities, or those serving only process loads, are exempt from these requirements and do not need to be included in Table H.

System Name:	HP-HM-1	**Economizer:**[1]	Differential Temperature	**Economizer Controls:**	Designed per and (m)	**System Fan Type:**	Fixed Flow
01	02	03	04	05	06	07	08
Fan Name or Item Tag	Fan Function	Qty	Maximum Design Supply Airflow (CFM)	HP Unit[2]	Design HP	Fan Power Pressure Drop Adjustment - Table 140.4-B	
						Device	Design Airflow through Device (CFM)
VRF	Other (Transfer, VAV box)	1	1975	BHP	0.02		
VRF	Other (Transfer, VAV box)	1	0	BHP	0.01		
VRF	Other (Transfer, VAV box)	1	0	BHP	0.02		
VRF	Other (Transfer, VAV box)	1	0	BHP	0.02		
VRF	Other (Transfer, VAV box)	1	0	BHP	0.02		
VRF	Other (Transfer, VAV box)	1	0	BHP	0.02		
EF	Exhaust	1	0	BHP	0.03		
Total System Design Supply Airflow (CFM):			1975	Total System Design (B)HP:	0.15	**Maximum System Fan Power (B)HP:**	0

[1] *FOOTNOTES: Computer room economizers must meet requirements of §140.9(a) and will be documented on the NRCC-PRC-E document.*
[2] *If total filter pressure drop (SPa) is greater than 1 in WC, or 245 Pascal then enter it and total fan pressure drop across the fan (SPf) for system.*

CERTIFICATE OF COMPLIANCE			NRCC-MCH-E
Project Name:	CCC Willits - Men's Housing	**Report Page:**	(Page 5 of 10)
Project Address:		**Date Prepared:**	9/3/2020

I. SYSTEM CONTROLS

This table is used to demonstrate compliance with mandatory controls in §110.2 and §120.2 and prescriptive controls in §140.4(f) and (n) or requirements in §141.0(b)2E for altered space conditioning systems.

01	02	03	04	05	06	07	08	09
System Name	System Zoning	Conditioned Floor Area Being Served (ft^2)	Thermostats §110.2(b) & (c)[1], §120.2(a)or §141.0(b)2E	Shut-Off Controls §120.2(e)	Isolation Zone Controls §120.2(g)	Demand Response §120.2(b)	Supply Air Temp. Reset §140.4(f)	Window Interlocks per §140.4(n)
HP-HM-1	Multi-zone w/ DDC to zone	<= 25,000 ft^2	Setback	Auto Timer Switch	4 Hour Timer	EMCS	Included	Provided

[1]*FOOTNOTES: Gravity gas wall heaters, gravity floor heaters, gravity room heaters, non-central electric heaters, fireplaces or decorative gas appliances, wood stoves are not required to have setback thermostats.*
*Notes: Controls with a * require a note in the space below explaining how compliance is achieved. EX: system 1: SA Temp Reset: Exempt because zones compliant with §140.4(d) ; EXCEPTION 1 to §140.4(f)

J. VENTILATION AND INDOOR AIR QUALITY

This table is used to demonstrate compliance with mandatory ventilation requirements in §120.1 and §120.2(e)3B for all nonresidential, high-rise residential and hotel/motel occupancies. For alterations, only ventialtion systems being altered within the scope of the permit application need to be documented in this table. In lieu of this table, the required outdoor ventilation rates and airflows may be shown on the plans or the calculations can be presented in a spreadsheet.

01	☐	Check the box if the project is showing ventilation calculations on the plans, or attaching the calculations instead of completing this table.
02	☒	Check this box if the project included new or altered high-rise residential dwelling units.
03	☐	Check the box if the project is using natural ventilation in any nonresidential or hotel/motel spaces to meet required ventilation rates per §120.1(c)2.

Nonresidential and Hotel/ Motel Ventilation Systems

04		05		06		07
System Name	HP-HM-1	System Design OA CFM Airflow[1]	123.96	System Design Transfer Air CFM	0	Air Filtration per §120.1(c) and §141.0(b)2 [2] Provided per §120.1(c) (NR and Hotel/Motel))
08	09	10 / 11	12	13 / 14	15	16

CERTIFICATE OF COMPLIANCE			NRCC-MCH-E
Project Name:	CCC Willits - Men's Housing	**Report Page:**	(Page 6 of 10)
Project Address:		**Date Prepared:**	9/3/2020

J. VENTILATION AND INDOOR AIR QUALITY

Space Name ot item Tag	Mechanical Ventilation Required per §120.1(c)3 [3]					Exh. Vent per §120.1(c)4		DCV or Sensor Controls per §120.1(d)3, §120.1(d)5, and §120.1(e)3 [6]	
	Occupancy Type[4]	Conditioned Floor Area (ft^2)	# of Shower heads/ toilets	# of people[5]	Required Min OA CFM	Required Min CFM	Provided per Design CFM		
FCU-HM-4	Toilet, public	928			0	0	0	DCV	NA: Not required per §120.1(d)3
								Occ Sensor	

[1] *FOOTNOTES: System CFM should include both mechanical and natural ventilation for the zone/system*
[2] *Air filtration requirements apply to the following three system types per §120.1(c)1A : space conditioning systems utilizing ducts to supply air to occupiable space; supply-only ventilation systems providing outside air to occupiable space; supply side of balanced ventilation systems including heat recovery and energy recovery ventilation systems providing outside air to occupiable space.*
[3] *Uniform Mechanical Code may have more stringent ventilation requirements; the most stringent code requirement takes precedence.*
[4] *See Standards Tables 120.1-A and 120.1-B.*
[5] *For lecture halls with fixed seating, the expected number of occupants shall be shall be determined in accordance with the California Building Code.*
[6] *§120.2(e)3 requires systems serving rooms that are required by §130.1(c) to have lighting occupancy sensing controls to also have occupancy sensing zone controls for ventilation. Examples of spaces which require lighting occupancy sensors include offices 250ft² or smaller, multipurpose rooms less than 1,000 ft², classrooms, conference rooms, restrooms, aisles and open areas in warehouses, library book stack aisles, corridors, stairwells, parking garages, and loading and unloading zones, unless excepted by §130.1(c).*

High-rise Residential Dwelling Unit Ventilation Systems

19	20	21	22	23	24	25	26		27
Space Name ot Item Tag	Mechanical Ventilation Required per §120.1(b)				Ventilation per Design		Local Exhaust		Air Filtration per §120.1(b) [3]
	Conditioned Floor Area (ft^2)	# of Bedrooms	# of Dwelling Units	Required Min OA CFM[1]	Supply Air CFM	Exhaust CFM			
FCU-HM-1	373	1	1	26.2	0	0	☒	Bathroom IAQ	Provided per
							☒	Bathroom IAQ and Vent.	
							☒	Kitchen Range Hood[2]	

CERTIFICATE OF COMPLIANCE			NRCC-MCH-E
Project Name:	CCC Willits - Men's Housing	**Report Page:**	(Page 7 of 10)
Project Address:		**Date Prepared:**	9/3/2020

J. VENTILATION AND INDOOR AIR QUALITY

FCU-HM-2	380	1	1	26.4	0	0	☒	Bathroom IAQ	Provided per
							☒	Bathroom IAQ and Vent.	
							☒	Kitchen Range Hood[2]	
FCU-HM-3	377	1	1	26.3	0	0	☒	Bathroom IAQ	Provided per
							☒	Bathroom IAQ and Vent.	
							☒	Kitchen Range Hood[2]	
FCU-HM-5	206	1	1	21.2	0	0	☒	Bathroom IAQ	Provided per
							☒	Bathroom IAQ and Vent.	
							☒	Kitchen Range Hood[2]	
FCU-HM-6	296	1	1	23.9	0	50	☒	Bathroom IAQ	Provided per
							☒	Bathroom IAQ and Vent.	
							☒	Kitchen Range Hood[2]	
28	Is this a balanced system[4]		No	29	Meeting Outside Air Requirements?				Yes

[1] *FOOTNOTES: Uniform Mechanical Code may have more stringent ventilation requirements; the most stringent code requirement takes precedence.*
[2] *Kitchen range hood will be verified per NA7.18.1 to confirm model is rated by HVI.*
[3] *Air filtration requirements apply to the following three system types per §120.1(c)1A : space conditioning systems utilizing ducts to supply air to occupiable space; supply-only ventilation systems providing outside air to occupiable space; supply side of balanced ventilation systems including heat recovery and energy recovery ventilation systems providing outside air to occupiable space.*
[4] *A balanced ventilation system provides ventilation airflow to each dwelling-unit at a rate equal to or greater than the required minimum rate, but not more than twenty percent.*

K. TERMINAL BOX CONTROLS

This section does not apply to this project.

L. DISTRIBUTION (DUCTWORK and PIPING)

This section does not apply to this project.

M. COOLING TOWERS

This section does not apply to this project.

CERTIFICATE OF COMPLIANCE			NRCC-MCH-E
Project Name:	CCC Willits - Men's Housing	**Report Page:**	(Page 8 of 10)
Project Address:		**Date Prepared:**	9/3/2020

N. DECLARATION OF REQUIRED CERTIFICATES OF INSTALLATION

Selections have been made based on information provided in previous tables of this document. If any selection needs to be changed, please explain why in Table E Additional Remarks. These documents must be provided to the building inspector during construction and can be found online at https://www.energy.ca.gov/title24/2019standards/2019_compliance_documents/Nonresidential_Documents/NRCI/

Yes	No	Form/Title	Field Inspector Pass	Field Inspector Fail
●	○	NRCI-MCH-01-E - Must be submitted for all buildings	☐	☐

O. DECLARATION OF REQUIRED CERTIFICATES OF ACCEPTANCE

Selections have been made based on information provided in previous tables of this document. If any selection needs to be changed, please explain why in Table E Additional Remarks. These documents must be provided to the building inspector during construction and can be found online at https://www.energy.ca.gov/title24/2019standards/2019_compliance_documents/Nonresidential_Documents/NRCA/

Yes	No	Form/Title	Field Inspector Pass	Field Inspector Fail
●	○	NRCA-MCH-02-A - Outdoor Air must be submitted for all newly installed HVAC units. Note: MCH-02-A can be performed in conjunction with MCH-07-A Supply Fan VFD Acceptance (if applicable) since testing activities overlap.	☐	☐
○	●	NRCA-MCH-03-A - Constant Volume Single Zone HVAC NOTE: This form does not automatically move to "Yes'. If Constant Volume Single Zone HVAC Systems are included in the scope, permit applicant should move this form to "Yes".	☐	☐
○	●	NRCA-MCH-04-A - Air Distribution Duct Leakage	☐	☐
○	●	NRCA-MCH-05-A - Air Economizer Controls	☐	☐
○	●	NRCA-MCH-06-A Demand Control Ventilation Systems must be submitted for all systems required to employ demand controlled ventilation (refer to §120.1(c)3) can vary outside ventilation flow rates based on maintaining interior carbon dioxide (CO_2) concentration setpoints.	☐	☐
○	●	NRCA-MCH-07-A Supply Fan Variable Flow Controls	☐	☐
○	●	NRCA-MCH-08-A Valve Leakage Test	☐	☐
○	●	NRCA-MCH-09-A Supply Water Temperature Reset Controls	☐	☐
○	●	NRCA-MCH-10-A Hydronic System Variable Flow Controls	☐	☐
●	○	NRCA-MCH-11-A Automatic Demand Shed Controls	☐	☐
○	●	NRCA-MCH-12-A FDD for Packaged Direct Expansion Units	☐	☐
○	●	NRCA-MCH-13-A Automatic FDD for Air Handling Units and Zone Terminal Units Acceptance	☐	☐

CERTIFICATE OF COMPLIANCE			NRCC-MCH-E
Project Name:	CCC Willits - Men's Housing	**Report Page:**	(Page 9 of 10)
Project Address:		**Date Prepared:**	9/3/2020

O. DECLARATION OF REQUIRED CERTIFICATES OF ACCEPTANCE

○	●	NRCA-MCH-14-A Distributed Energy Storage DX AC Systems Acceptance NOTE: This form does not automatically move to "Yes". If Distributed Energy System DX AC Systems are included in teh scope permit applicant should move this form to "Yes".	☐	☐
○	●	NRCA-MCH-15-A Thermal Energy Storage (TES) System Acceptance NOTE: This form does not automatically move to "Yes". If Chilled water Storage, Ice-on-Coil Internal Melt, Ice-on-Coil External melt, Ice Harvester, Brine, Ice-Slurry, Eutecti Salt, Clathrate Hydrate Slurry (CHS), Cryogenic or Encapsulated (Ice Ball) Systems are included in the scope, permit applicant should move this form to 'Yes".	☐	☐
○	●	NRCA-MCH-16-A Supply Air Temperature Reset Controls	☐	☐
○	●	NRCA-MCH-17-A Condenser Water Temperature Reset Controls	☐	☐
○	●	NRCA-MCH-18-A Energy Management Control Systems	☐	☐
○	●	NRCA-MCH-19-A Occupancy Sensor Controls	☐	☐
●	○	NRCA-MCH-20 Multi-Family Ventilation	☐	☐
●	○	NRCA-MCH-21 Multi-Family Envelope Leakage	☐	☐

P. DECLARATION OF REQUIRED CERTIFICATES OF VERIFICATION

Selections have been made based on information provided in previous tables of this document. If any selection needs to be changed, please explain why in Table E Additional Remarks. These documents must be completed by a HERS Rater and provided to the building inspector during construction. The finsl documents must be creted by a HERS Providrs registry, but drafts can be found online at https://www.energy.ca.gov/title24/2019standards/2019_compliance_documents/Nonresidential_Documents/NRCV/

Yes	No	Form/Title	Field Inspector Pass	Field Inspector Fail
○	●	NRCV-MCH-04-H Duct Leakaage Test *NOTE: Must be completed by a HERS Rater*	☐	☐
●	○	NRCV-MCH-24 Enclosure Air Leakaage Worksheet *NOTE: Must be completed by a HERS Rater*	☐	☐
●	○	NRCV-MCH-27 High-rise Resdential *NOTE: Must be completed by a HERS Rater*	☐	☐
●	○	NRCV-MCH-32 Local Mechanical Exhaust *NOTE: Must be completed by a HERS Rater*	☐	☐

Q. MANDATORY MEASURES DOCUMENTATION LOCATION

This table is used to indicate where mandatory measures are documented in the plan set or construction documentation.

01		02
Compliance with Mandatory Measures documented through MCH Mandatory Measures Note Block[1]	Yes	Plan sheet or construction document location
		M-Sheets

IDENTIFICATION STAMP
DIV. OF THE STATE ARCHITECT
APP: 02-118630 INC:
REVIEWED FOR
SS ☐ FLS ☐ ACS ☑
DATE: 04/13/2021

OFFICE OF THE STATE FIRE MARSHAL
APPROVED FIRE AND PANIC ONLY
Approval of this plan does not authorize or approve any omission or deviation from applicable regulations. Final approval is subject to field inspection. One set of approved plans shall be available on the project site at all times.
PERMIT NO.: 20-N-2332-CP
REVIEWED BY: LITO CATAYLO, OSFM
DATE: 3/1/2021

GENERAL SERVICES
Department of General Services
State of California
Real Estate Services Division
Project Management & Development Branch
707 Third Street, Suite 4-105
West Sacramento, California 95605

NICHOLS MELBURG & ROSSETTO
ARCHITECTS + ENGINEERS
300 Knollcrest Drive
Redding, CA. 96002
(530) 222-3300 (530) 222-3538 FAX
http://www.nmrdesign.com

Copyright © 2019
All ideas, designs, arrangements and plans indicated or represented by this drawing are owned by, and the property of, NICHOLS, MELBURG and ROSSETTO and were created, evolved and developed for use on, and in conjunction with, the specified project. None of such ideas, designs, arrangements or plans shall be used by, or disclosed to any person, firm or corporation for any purpose whatsoever without the written permission of NICHOLS, MELBURG and ROSSETTO.

LICENSE STAMPS
REGISTERED PROFESSIONAL ENGINEER
M 33498
EXPIRES 9/30/22
MECHANICAL
STATE OF CALIFORNIA
DATE SIGNED: 10-20-20

CONSULTANT
CAPITAL
ENGINEERING CONSULTANTS, INC.
RANCHO CORDOVA, CALIFORNIA
JD - HC/JH 181205.00
PM - DESIGN TEAM PROJECT NO.

DRAWING STATUS
CONSTRUCTION DOCUMENTS

ISSUE

No.	Date	Description
1	10/22/2020	INITIAL PLAN REVIEW
2	01/22/2021	AGENCY RESUBMITTAL
3	03/22/2021	AGENCY RESUBMITTAL

If drawing is not 30" x 42" it is a reduced print

PROJECT
RESIDENTIAL CENTER, UKIAH: REPLACEMENT OF EXISTING RESIDENTIAL CENTER
440 EAST HILL ROAD
WILLITS, CALIFORNIA 95490
MENDOCINO COUNTY
CALIFORNIA CONSERVATION CORP

Supervisor | Designed | Drawn Author

DSA Application No.
02-118630

SHEET TITLE
MEN'S HOUSING TITLE 24 COMPLIANCE

DGS Project Number 000000000001826
NMR Project Number 18-6456

Sheet Scale

Sheet Number
M401HM

ISSUE DATE
July 9, 2021

Plot Date: 3/19/2021 1:27:25 PM
File Name: L:\Revit Local Files\CECI_DGS CCC Willits_Dorm_Men_MP18_Central_jduvalKTH47.rvt

STATE OF CALIFORNIA

Mechanical Systems

NRCC-MCH-E

CALIFORNIA ENERGY COMMISSION

CERTIFICATE OF COMPLIANCE			NRCC-MCH-E
Project Name:	CCC Willits - Men's Housing	**Report Page:**	**(Page 10 of 10)**
Project Address:		**Date Prepared:**	9/3/2020

DOCUMENTATION AUTHOR'S DECLARATION STATEMENT	
I certify that this Certificate of Compliance documentation is accurate and complete.	
Documentation Author Name: Jessica Hughey	Documentation Author Signature: [signature]
Company: Capital Engineering Consultants Inc.	Signature Date: 10/20/2020
Address: 11020 Sun Center Dr. Suite 100	CEA/ HERS Certification Identification (if applicable):
City/State/Zip: Rancho Cordova CA 95670	Phone: (916) 850-3500

RESPONSIBLE PERSON'S DECLARATION STATEMENT

I certify the following under penalty of perjury, under the laws of the State of California:

1. The information provided on this Certificate of Compliance is true and correct.
2. I am eligible under Division 3 of the Business and Professions Code to accept responsibility for the building design or system design identified on this Certificate of Compliance (responsible designer)
3. The energy features and performance specifications, materials, components, and manufactured devices for the building design or system design identified on this Certificate of Compliance conform to the requirements of Title 24, Part 1 and Part 6 of the California Code of Regulations.
4. The building design features or system design features identified on this Certificate of Compliance are consistent with the information provided on other applicable compliance documents, worksheets, calculations, plans and specifications submitted to the enforcement agency for approval with this building permit application.
5. I will ensure that a completed signed copy of this Certificate of Compliance shall be made available with the building permit(s) issued for the building, and made available to the enforcement agency for all applicable inspections. I understand that a completed signed copy of this Certificate of Compliance is required to be included with the documentation the builder provides to the building owner at occupancy.

Responsible Designer Name: Kevin D. Stillman	Responsible Designer Signature: [signature]
Company: Capital Engineering Consultants, Inc.	Date Signed: 2020-09-03
Address: 11020 Sun Center Dr. Suite 100	License: M 33498
City/State/Zip: Rancho Cordova CA 95670	Phone:

STATE OF CALIFORNIA

Domestic Water Heating System

NRCC-PLB-E

CALIFORNIA ENERGY COMMISSION

CERTIFICATE OF COMPLIANCE NRCC-PLB-E

This document is used to demonstrate compliance for nonresidential occupancies with requirements in §110.1, §110.3, §120.3, and §140.5, and with requirements in §141.0 for additions and alterations, for domestic water heating scopes using the prescriptive path. For high-rise residential and hotel/motel occupancies compliance is demonstrated with requirements in §110.1, §110.3, §120.3, §150.0 and §150.1(c)8, and with requirements §150.2 for additions.

Project Name:	CCC Willits - Men's Housing	**Report Page:**	**(Page 1 of 9)**
Project Address:		**Date Prepared:**	9/3/2020

A. GENERAL INFORMATION

01	Project Location (city)	Willits	02	Climate Zone	2
03	Occupancy Types Within Project (select all that apply):				
☒ Nonresidential	☒ High-Rise Residential	☐ Hotel/Motel			
☐ State Building	☐ Healthcare Facility	☐ Other (Write In)			

B. PROJECT SCOPE

This table includes domestic water heating systems that are within the scope of the permit application and are demonstrating compliance using the prescriptive paths outlined in §140.5, §150.1(c)8, and §141.0(a), or §141.0(b)2N for additions or alterations. Solar water heating systems are documented on the NRCC-SRA compliance document. Combined hydronic water heating systems are documented on the NRCC-MCH compliance document.

01	02	03		
My project consists of (check all that apply):	System Type[1,2]	System Components		
☒ New system (DHW system being installed for the first time in newly constructed building)	Individual System (serving nonresidential spaces)	☒ Equipment	☒ Distribution	☒ Controls
☒ New system (DHW system being installed for the first time in newly constructed building)	Individual Dwelling Units System(s)	☒ Equipment	☒ Distribution	☒ Controls
☐ System Alteration (equipment, distribution or controls)		☐ Equipment	☐ Distribution	☐ Controls

[1]FOOTNOTES: Point of use water heaters, or other non-central systems used to serve nonresidential spaces, are considered individual systems.

[2] Dwelling units refers to hotel/motel guest rooms and units in a high-rise residential occupancy.

STATE OF CALIFORNIA

Domestic Water Heating System

NRCC-PLB-E

CALIFORNIA ENERGY COMMISSION

CERTIFICATE OF COMPLIANCE			NRCC-PLB-E
Project Name:	CCC Willits - Men's Housing	**Report Page:**	**(Page 2 of 9)**
Project Address:		**Date Prepared:**	9/3/2020

C. COMPLIANCE RESULTS

Table C will indicate if the project data input into the compliance document is compliant with water heating requirements. If this table says "DOES NOT COMPLY" or "COMPLIES with Exceptional Conditions" refer to Table D. or the table indicated as not compliant for guidance.

01	02	03	04
Domestic Hot Water Equipment	Distribution Systems	Controls	**Compliance Results**
Table F	Table G	Table H	
Yes	Yes	Yes	COMPLIES

D. EXCEPTIONAL CONDITIONS

This table is auto-filled with uneditable comments because of selections made or data entered in tables throughout the form.

E. ADDITIONAL REMARKS

This table is includes remarks made by the permit applicant to the Authority Having Jurisdiction.

STATE OF CALIFORNIA

Domestic Water Heating System

NRCC-PLB-E

CALIFORNIA ENERGY COMMISSION

CERTIFICATE OF COMPLIANCE			NRCC-PLB-E
Project Name:	CCC Willits - Men's Housing	**Report Page:**	**(Page 3 of 9)**
Project Address:		**Date Prepared:**	9/3/2020

F. DOMESTIC HOT WATER EQUIPMENT

This table is used to demonstrate compliance with mandatory equipment requirements in §110.1 and §110.3. For high-rise residential and hotel/motel occupancies, compliance with prescriptive requirements in §150.1(c)8 must also be demonstrated and with §150.2 for addition and alteration scopes.

Equipment Schedule: Individual Systems

01	02	03	04	05	06
Name or Item Tag	Equipment Type	Volume (gal)	Max GPM/ First Hour Rating (FHR)	Rated Uniform Energy Factor (UEF)	Minimum Required Uniform Energy Factor (UEF)[1]

[1]FOOTNOTE: Compliant equipment may be found in the Modernized Appliance Efficiency Database System (MAEDBS) on the Energy Commission website: https://cacertappliances.energy.ca.gov/Pages/Search/AdvancedSearch.aspx

Water Heating Equipment in Individual Dwelling Units[1]

Equipment Type (select all that apply):

16	☐	Gas/propane instantaneous water heater with input rating <= 200,000 BTUH and no storage tank. Note: Can not comply using the prescriptive path with a storage tank per §150.1(c)8Ai (New Construction Only)
	☐	Gas/propane storage type water heater with input rating <= 75,000 BTUH (New Construction only)
		☐ Rated volume <= 55 gal
		☐ Rated volume > 55 gal
	☒	A single heat pump water heater with storage tank located in the garage or conditioned space. (New Construction Only)
		☐ Water heater meets the requirements of NEEA Advanced Water Heater Specification Tier 3 or higher.
	☐	A single heat pump water heater with storage tank located in the garage or conditioned space and be placed on an incompressible, rigid insulated surface with minimum R-10. (Alterations in climate zones 1-15 Only)
		☐ Water heater meets the requirements of NEEA Advanced Water Heater Specification Tier 3 or higher.
	☐	No gas connection to existing water heater location for replacement water heater. Consumer electric water heater must meet Title 20 Appliance Efficiency requirements (see Equipment Schedule above) per §150.2(b)1H. (Alterations only)

STATE OF CALIFORNIA

Domestic Water Heating System

NRCC-PLB-E

CALIFORNIA ENERGY COMMISSION

CERTIFICATE OF COMPLIANCE			NRCC-PLB-E
Project Name:	CCC Willits - Men's Housing	**Report Page:**	**(Page 4 of 9)**
Project Address:		**Date Prepared:**	9/3/2020

F. DOMESTIC HOT WATER EQUIPMENT

	Yes	No	Not Applicable	Requirement
17	☐	☐	☒	For gas or propane water heaters serving individual dwelling units, the follow components are included in the design per §150.0(n)1 : (New Construction only) • Dedicated 125V, 20 amp electrical receptacle that is connected to the panel with a 120/240V 3 conductor, 10 AWG copper branch circuit within 3ft from the water heater that's accessible and with both ends of the unused conductor labeled with the word "spare" and be electrically isolated. A single pole circuit breaker space in the panel adjacent to the circuit breaker for the branch circuit is provided labeled with the word "future 240V use"; and • Category III or IV vent, or Type B vent with straight pipe between the outside termination and where the water heater is installed; and • Condensate drain that is no more than 2in higher than the base of the water heater and drains without pump assistance; and [• Gas supply line with a capacity of at least 200,000 BTUH

[1]FOOTNOTE: Dwelling Units refers to hotel/motel guest rooms and units in a high-rise residential occupancy.

Water Heating Equipment All Occupancies

	Yes	No	Not Applicable	Requirement
18	☐	☐	☒	Unfired storage tank insulation shall have Internal + External >=R-16 OR External >=R-12. Label required per §110.3(c)3
19	☐	☐	☒	New state buildings 60% of energy for service water heating from site solar energy or recovered energy per §110.3(c)5
20	☐	☐	☒	Isolation valves for instantaneous water heater with input rating <6.8 kBTUH or 2 kW has been specified per §110.3(c)6

STATE OF CALIFORNIA

Domestic Water Heating System

NRCC-PLB-E

CALIFORNIA ENERGY COMMISSION

CERTIFICATE OF COMPLIANCE			NRCC-PLB-E
Project Name:	CCC Willits - Men's Housing	**Report Page:**	**(Page 5 of 9)**
Project Address:		**Date Prepared:**	9/3/2020

G. DOMESTIC HOT WATER DISTRIBUTION SYSTEM

This table is used to demonstrate compliance for nonresidential occupancies with distribution requirements in §120.3 and §140.5. For high-rise residential and hotel/motel occupancies, compliance is demonstrated with requirements §110.3(c), §120.3, §150.0, §150.1

Distribution in Individual Dwelling Units

	Yes	No	Not Applicable	Requirement
08	○	○	●	The dwelling unit is designed to have fenestration products with a weighted average U-factor <=0.24 plus one of the following options per §150.1(c)8Aii : (New Construction Only) • Compact hot water distribution system field verified by a HERS Rater per Reference Appendix RA4.4.16 • A drain water heat recovery system that is field verified by a HERS rater per Reference Appendix RA3.6.9 ☐ Compact hot water distribution system ☐ A drain water heat recovery system
09	●	○	○	One of the following options is included in the design per §150.1(c)8Aiv : (New Construction only) • Compact hot water distribution system field verified by HERS rater per Reference Appendix RA4.4.6 and a drain water heat recovery system that is field verified by a HERS rater per Reference Appendix RA3.6.9 • A photovoltaic system capacity of 0.3kWdc (for climate zones 2-15) or 1.1kWcd (for climate zones 1 & 16) larger than the requirement specified in §150.1(c)14. ☐ Compact hot water distribution system and a drain water heat recovery system ☒ A photovoltaic system
10	○	○	●	One of the following options is included in the design per §150.1(c)8Av : (New Construction only) • Compact hot water distribution system per Reference Appendix RA4.4.6 for projects in climates zones 1 and 16. • A photovoltaic system capacity of 0.3kWdc (form climate zones 1 and 16) larger than the requirement specified in §150.1(c)14. ☐ Compact hot water distribution system ☐ A photovoltaic system

STATE OF CALIFORNIA

Domestic Water Heating System

NRCC-PLB-E

CALIFORNIA ENERGY COMMISSION

CERTIFICATE OF COMPLIANCE			NRCC-PLB-E
Project Name:	CCC Willits - Men's Housing	**Report Page:**	**(Page 6 of 9)**
Project Address:		**Date Prepared:**	9/3/2020

G. DOMESTIC HOT WATER DISTRIBUTION SYSTEM

Mandatory Pipe Insulation All Occupancies

11	☒	For systems serving dwelling units, pipe insulation for the following applications is specified to have a minimum wall thickness of 1 in or a minimum R-value of 7.7 per §150.0(j)2A : • The first 5ft of cold water pipes form storage tank • All hot water piping with nominal diameter of 3/4 in - 1 in • All hot water piping with nominal diameter < 3/4 in associated with DHW recirculation systems • Piping with nominal diameter < 3/4 from heating source to storage tank or between tanks • Piping with nominal diameter < 3/4 buried below grade • All hot water pipes with nominal diameter < 3/4 from heating source to kitchen fixtures
12	☒	For systems serving nonresidential spaces, pipe insulation for the following applications is specified to comply with Table 120.3-A (see below) per §120.3 : • Recirculating system piping, including supply and return piping of the water heater • The first 8 ft of hot and cold outlet piping, including between storage tank and heat trap, for a nonrecirculating storage system • Pipes that are externally heated
13	☒	Insulation shall be protected from damage, including that due to sunlight, moisture, equipment maintenance, and wind. Insulation exposed to weather shall be installed with a cover suitable for outdoor service per §120.3(b) and §150.0(j)3

TABLE 120.3-A PIPE INSULATION THICKNESS

Fluid Temperature Range (°F)	Conductivity Range (Btu-in per hour per ft² per °F)	Insulation Mean Rating Temp (°F)	Nominal Pipe Diameter (in)		
			< 1	1 to < 1.5	1.5 to < 4
			Minimum Insulation Required		
105-140	0.22 - 0.28	100	1.0 in or R-7.7	1.5 in or R-12.5	1.5 in or R-11

STATE OF CALIFORNIA

Domestic Water Heating System

NRCC-PLB-E

CALIFORNIA ENERGY COMMISSION

CERTIFICATE OF COMPLIANCE			NRCC-PLB-E
Project Name:	CCC Willits - Men's Housing	**Report Page:**	**(Page 7 of 9)**
Project Address:		**Date Prepared:**	9/3/2020

H. DOMESTIC HOT WATER CONTROLS

This table is used to demonstrate compliance with control requirements in §110.3 for all occupancies. For high-rise residential and hotel/motel occupancies, compliance is also demonstrated with requirements in §150.1(c)8.

	Yes	No	Not Applicable	Requirement
01	☒	☐	☐	Construction documents require manufacturer certification that service water-heating systems are equipped with automatic temperature controls capable of adjusting temperature settings per §110.3(a).
02	☐	☐	☒	Systems with capacity > 167,000 BTUH equipped with outlet temperature controls per §110.3(c)1 unless covered by California Plumbing Code 613.0.
03	☐	☐	☒	Controls for circulating pumps or electrical heat trace systems are capable of automatically turning off the system per §110.3(c)2 unless systems serves healthcare facility.
04	☐	☐	☒	For recirculation systems serving multiple dwelling units, design includes automatic pump controls per §150.1(c)8Bii, or §150.2 for additions or alterations.
05	☐	☐	☒	For recirculation systems serving individual dwelling units, design includes manual on/off controls as specified in Reference Appendix RA4.4.9 per §150.1(c)8.
06	☐	☐	☒	For replacement single heat pump water heaters serving individual dwelling units in climate zone 1-15, design includes communication interface that meets demand responsive control requirements of §110.12(a) per §150.2(b)1Hiii.

I. DECLARATION OF REQUIRED CERTIFICATES OF INSTALLATION

Selections have been made based on information provided in this document. If any selection have been changed by permit applicant, an explanation should be included in Table E. Additional Remarks. These documents must be provided to the building inspector during construction and can be found online at https://www.energy.ca.gov/title24/2019standards/2019_compliance_documents/Nonresidential_Documents/NRCI/

Yes	No	Form/Title	Field Inspector Pass	Field Inspector Fail
●	○	NRCI-PLB-01-E - Must be submitted for all buildings	☐	☐
○	●	NRCI-PLB-02-E - Must be submitted for high-rise residential and hotel/motel central hot water distribution systems to be recognized for compliance.	☐	☐
●	○	NRCI-PLB-03-E - Must be submitted for high-rise residential and hotel/motel single dwelling unit hot water distribution systems to be recognized for compliance.	☐	☐

STATE OF CALIFORNIA

Domestic Water Heating System

NRCC-PLB-E

CALIFORNIA ENERGY COMMISSION

CERTIFICATE OF COMPLIANCE			NRCC-PLB-E
Project Name:	CCC Willits - Men's Housing	**Report Page:**	**(Page 8 of 9)**
Project Address:		**Date Prepared:**	9/3/2020

J.DECLARATION OF REQUIRED CERTIFICATES OF ACCEPTANCE

There are no Certificates of Acceptance applicable to service water heating requirements.

K. DECLARATION OF REQUIRED CERTIFICATES OF VERIFICATION

Selections have been made based on information provided in this document. If any selection have been changed by permit applicant, an explanation should be included in Table E. Additional Remarks. These documents must be completed by a HERS Rater and provided to the building inspector during construction. The final documents must be created by a HERS Providers registry, but drafts can be found online at https://www.energy.ca.gov/title24/2019standards/2019_compliance_documents/Nonresidential_Documents/NRCI/

Yes	No	Form/Title	Field Inspector Pass	Field Inspector Fail
○	●	NRCV-PLB-21-H High-rise Residential Central Hot Water Distribution HERS Verification	☐	☐
○	●	NRCV-PLB-22-H High-rise Residential Individual Dwelling Unit Hot Water Distribution HERS Verification	☐	☐

IDENTIFICATION STAMP
DIV. OF THE STATE ARCHITECT
APP: 02-118630 INC:
REVIEWED FOR
SS ☐ FLS ☐ ACS ☑
DATE: 04/13/2021

OFFICE OF THE STATE FIRE MARSHAL
APPROVED FIRE AND PANIC ONLY
Approval of this plan does not authorize or approve any omission or deviation from applicable regulations. Final approval is subject to field inspection. One set of approved plans shall be available on the project site at all times.
PERMIT NO.: 20-N-2332-CP
REVIEWED BY: LITO CATAYLO, OSFM
DATE: 4/1/2021

GENERAL SERVICES
Department of General Services
State of California
Real Estate Services Division
Project Management & Development Branch
707 Third Street, Suite 4-105
West Sacramento, California 95605

NICHOLS MELBURG & ROSSETTO
ARCHITECTS + ENGINEERS
300 Knollcrest Drive
Redding, CA. 96002
(530) 222-3300 (530) 222-3538 FAX
http://www.nmrdesign.com

Copyright © 2019
All ideas, designs, arrangements and plans indicated or represented by this drawing are owned by, and the property of, NICHOLS, MELBURG and ROSSETTO and were created, evolved and developed for use on, and in conjunction with, the specified project. None of such ideas, designs, arrangements or plans shall be used by, or disclosed to any person, firm or corporation for any purpose whatsoever without the written permission of NICHOLS, MELBURG and ROSSETTO.

LICENSE STAMPS
REGISTERED PROFESSIONAL ENGINEER KEVIN D. STILLMAN M 33498 EXPIRES 9/30/22 MECHANICAL STATE OF CALIFORNIA
DATE SIGNED: 10-20-20

CONSULTANT
CAPITAL ENGINEERING CONSULTANTS, INC.
RANCHO CORDOVA, CALIFORNIA
JD - HC/JH 181205.00
PM - DESIGN TEAM PROJECT NO.

DRAWING STATUS
CONSTRUCTION DOCUMENTS

ISSUE

No.	Date	Description
1	10/22/2020	INITIAL PLAN REVIEW
2	01/22/2021	AGENCY RESUBMITTAL
3	03/22/2021	AGENCY RESUBMITTAL

If drawing is not 30" x 42" it is a reduced print

PROJECT
RESIDENTIAL CENTER, UKIAH: REPLACEMENT OF EXISTING RESIDENTIAL CENTER
440 EAST HILL ROAD
WILLITS, CALIFORNIA 95490
MENDOCINO COUNTY
CALIFORNIA CONSERVATION CORP

Supervisor	Designed	Drawn
		Author

DSA Application No.
02-118630

SHEET TITLE
MEN'S HOUSING TITLE 24 COMPLIANCE

DGS Project Number	NMR Project Number
000000000001826	18-6456

Sheet Scale

Sheet Number
M402HM

ISSUE DATE
July 9, 2021

Plot Date: 3/19/2021 1:27:27 PM
File Name: L:\Revit Local Files\CECI_DGS CCC Willits_Dorm_Men_MP18_Central_jduvalKTH47.rvt

STATE OF CALIFORNIA

Domestic Water Heating System

NRCC-PLB-E

CALIFORNIA ENERGY COMMISSION

CERTIFICATE OF COMPLIANCE		NRCC-PLB-E
Project Name:	CCC Willits - Men's Housing	**Report Page:** (Page 9 of 9)
Project Address:		**Date Prepared:** 9/3/2020

DOCUMENTATION AUTHOR'S DECLARATION STATEMENT

I certify that this Certificate of Compliance documentation is accurate and complete.

Documentation Author Name:	Documentation Author Signature:
Jessica Hughey	
Company: Capital Engineering Consultants Inc.	Signature Date: 10/20/2020
Address: 11020 Sun Center Dr. Suite 100	CEA/ HERS Certification Identification (if applicable):
City/State/Zip: Rancho Cordova CA 95670	Phone: (916) 850-3500

RESPONSIBLE PERSON'S DECLARATION STATEMENT

I certify the following under penalty of perjury, under the laws of the State of California:

1. The information provided on this Certificate of Compliance is true and correct.
2. I am eligible under Division 3 of the Business and Professions Code to accept responsibility for the building design or system design identified on this Certificate of Compliance (responsible designer)
3. The energy features and performance specifications, materials, components, and manufactured devices for the building design or system design identified on this Certificate of Compliance conform to the requirements of Title 24, Part 1 and Part 6 of the California Code of Regulations.
4. The building design features or syste n design features identified on this Certificate of Compliance are consistent with the information provided on other applicable compliance documents, worksheets, calculations, plans and specifications submitted to the enforcement agency for approval with this building permit application.
5. I will ensure that a completed signed copy of this Certificate of Compliance shall be made available with the building permit(s) issued for the building, and made available to the enforcement agency for all applicable inspections. I understand that a comleted signed copy of this Certificate of Compliance is required to be included with the documentation the builder provides to the building owner at occupancy.

Responsible Designer Name:	Responsible Designer Signature:
Kevin D. Stillman	
Company: Capital Engineering Consultants, Inc.	Date Signed: 2020-09-03
Address: 11020 Sun Center Dr. Suite 100	License: M 33498
City/State/Zip: Rancho Cordova CA 95670	Phone:

Registration Number:

CA Building Energy Efficiency Standards - 2019 Nonresidential Compliance

Registration Date/Time:

Report Version: 2019.0.001
Schema Version: nrv 20190401

Registration Provider: Energysoft

Report Generated: 2020-09-03 16:26:12

IDENTIFICATION STAMP
DIV. OF THE STATE ARCHITECT
APP: 02-118630 INC:
REVIEWED FOR
SS ☐ FLS ☐ ACS ☑
DATE: 04/13/2021

OFFICE OF THE STATE FIRE MARSHAL
APPROVED FIRE AND PANIC ONLY
Approval of this plan does not authorize or approve any omission or deviation from applicable regulations. Final approval is subject to field inspection. One set of approved plans shall be available on the project site at all times.
PERMIT NO. 20-N-2332-CP
REVIEWED BY: LEO CATAYLO, OSFM
DATE: 4/ /2021

GENERAL SERVICES
Department of General Services
State of California
Real Estate Services Division
Project Management & Development Branch
707 Third Street, Suite 4-105
West Sacramento, California 95605

NICHOLS MELBURG & ROSSETTO
ARCHITECTS + ENGINEERS
300 Knollcrest Drive
Redding, CA. 96002
(530) 222-3300 (530) 222-3538 FAX
http://www.nmrdesign.com

Copyright © 2019
All ideas, designs, arrangements and plans indicated or represented by this drawing are owned by, and the property of, NICHOLS, MELBURG and ROSSETTO and were created, evolved and developed for use on, and in conjunction with, the specified project. None of such ideas, designs, arrangements or plans shall be used by, or disclosed to any person, firm or corporation for any purpose whatsoever without the written permission of NICHOLS, MELBURG and ROSSETTO.

LICENSE STAMPS

REGISTERED PROFESSIONAL ENGINEER
Kevin D. Stillman
M 33498
EXPIRES 9/30/22
MECHANICAL
STATE OF CALIFORNIA
DATE SIGNED: 10-20-20

CONSULTANT

CAPITAL
ENGINEERING CONSULTANTS, INC.
RANCHO CORDOVA, CALIFORNIA
JD - HC/JH — PM - DESIGN TEAM
181205.00 — PROJECT NO.

DRAWING STATUS
CONSTRUCTION DOCUMENTS

ISSUE

No.	Date	Description
1	10/22/2020	INITIAL PLAN REVIEW
2	01/22/2021	AGENCY RESUBMITTAL
3	03/22/2021	AGENCY RESUBMITTAL

If drawing is not 30" x 42" it is a reduced print

PROJECT
RESIDENTIAL CENTER, UKIAH: REPLACEMENT OF EXISTING RESIDENTIAL CENTER
440 EAST HILL ROAD
WILLITS, CALIFORNIA 95490
MENDOCINO COUNTY
CALIFORNIA CONSERVATION CORP

Supervisor	Designed	Drawn
		Author

DSA Application No.
02-118630

SHEET TITLE
MEN'S HOUSING TITLE 24 COMPLIANCE

DGS Project Number: 0000000000001826
NMR Project Number: 18-6456

Sheet Scale

Sheet Number
M403HM

ISSUE DATE
July 9, 2021

Plot Date: 3/18/2021 1:27:26 PM
File Name: L:\Revit Local Files\CEC_DGS CCC Willits_Dorm_Men_MP18_Central_jdvnaRKTH47.rvt

REFRIGERANT CONCENTRATION CALC

SYSTEM	REFRIGERANT		DESIGN ROOM FLOOR AREA [SQ FT]	DESIGN ROOM CLG HEIGHT [FT]	DESIGN ROOM VOLUME [CU FT]	CONCENTRATION [LBS / 1000 CF]	
	TYPE	CHARGE [LBS]				DESIGN	LIMIT
HP/HW-1	R-410A	25.8	206	10'-0"	2,060	12.5	26

NOTES:

1. DESIGN REFRIGERANT CHARGE IS CALCULATED USING BASIS OF DESIGN EQUIPMENT MANUFACTURER'S CATALOG DATA FOR FACTORY PRE-CHARGE AND ADDITIONAL CHARGE FOR ASSUMED LINE LENGTHS. INSTALLING CONTRACTOR SHALL PROVIDE UPDATED CALCULATIONS BASED ON ACTUAL REFRIGERANT CHARGE AND MAKE THEM AVAILABLE FOR REVIEW BY FIELD INSPECTOR OR OTHER AGENCIES.
2. CONCENTRATION LIMITS ARE TAKEN FROM 2019 CALIFORNIA MECHANICAL CODE TABLE 1102.3.

KEYNOTES:

1 PROVIDE WINDOW SENSOR AT OPERABLE WINDOW, FOR INTERLOCK WITH FAN COIL, SEE 1/M601.

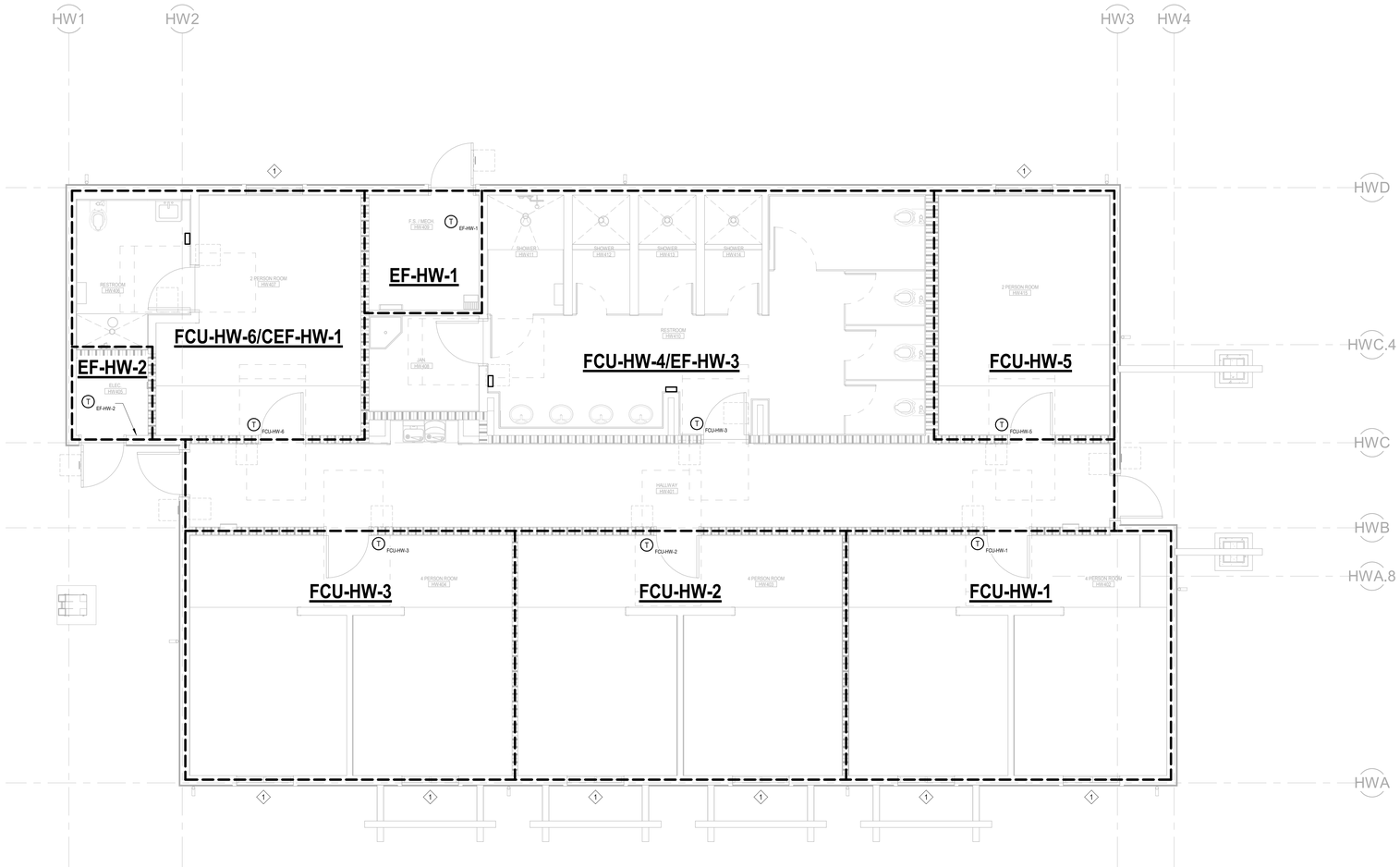

1 M101HW WOMEN'S HOUSING HVAC ZONE PLAN
SCALE: 1/4" = 1'-0"

IDENTIFICATION STAMP
DIV. OF THE STATE ARCHITECT
APP: 02-118630 INC:
REVIEWED FOR
SS ☐ FLS ☐ ACS ☑
DATE: 04/13/2021

OFFICE OF THE STATE FIRE MARSHAL
APPROVED FIRE AND PANIC ONLY
Approval of this plan does not authorize or approve any omission or deviation from applicable regulations. Final approval is subject to field inspection. One set of approved plans shall be available on the project site at all times.
PERMIT NO: 20-N-2332-CP
REVIEWED BY: LEO CATAYLO, OSFM
DATE: 4 / /2021

GENERAL SERVICES
Department of General Services
State of California
Real Estate Services Division
Project Management & Development Branch
707 Third Street, Suite 4-105
West Sacramento, California 95605

NICHOLS MELBURG & ROSSETTO
ARCHITECTS + ENGINEERS
300 Knollcrest Drive
Redding, CA. 96002
(530) 222-3300 (530) 222-3538 FAX
http://www.nmrdesign.com

Copyright © 2019
All ideas, designs, arrangements and plans indicated or represented by this drawing are owned by, and the property of, NICHOLS, MELBURG and ROSSETTO and were created, evolved and developed for use on, and in conjunction with, the specified project. None of such ideas, designs, arrangements or plans shall be used by, or disclosed to any person, firm or corporation for any purpose whatsoever without the written permission of NICHOLS, MELBURG and ROSSETTO.

LICENSE STAMPS

REGISTERED PROFESSIONAL ENGINEER
M 33498
EXPIRES 8/30/22
MECHANICAL
STATE OF CALIFORNIA
DATE SIGNED: 10-20-20

CONSULTANT

CAPITAL
ENGINEERING CONSULTANTS, INC.
RANCHO CORDOVA, CALIFORNIA
JD - HCJH — PM - DESIGN TEAM
181205.00 — PROJECT NO.

DRAWING STATUS
CONSTRUCTION DOCUMENTS

ISSUE

No.	Date	Description
1	10/22/2020	INITIAL PLAN REVIEW
2	01/22/2021	AGENCY RESUBMITTAL
3	03/22/2021	AGENCY RESUBMITTAL

If drawing is not 30" x 42" it is a reduced print

PROJECT
RESIDENTIAL CENTER, UKIAH: REPLACEMENT OF EXISTING RESIDENTIAL CENTER
440 EAST HILL ROAD
WILLITS, CALIFORNIA 95490
MENDOCINO COUNTY
CALIFORNIA CONSERVATION CORP

Supervisor	Designed	Drawn
		Author

DSA Application No.
02-118630

SHEET TITLE
WOMEN'S HOUSING HVAC ZONE PLAN

DGS Project Number: 0000000000001826
NMR Project Number: 18-6456

Reference North
Sheet Scale: As indicated
Sheet Number: M101HW

ISSUE DATE
July 9, 2021

Plot Date: 3/18/2021 12:05:27 PM
File Name: L:\Revit Local Files\CECI_DGS CCC Willits_Dorm_Women_MP18_Central_jduvall\KTH47.rvt

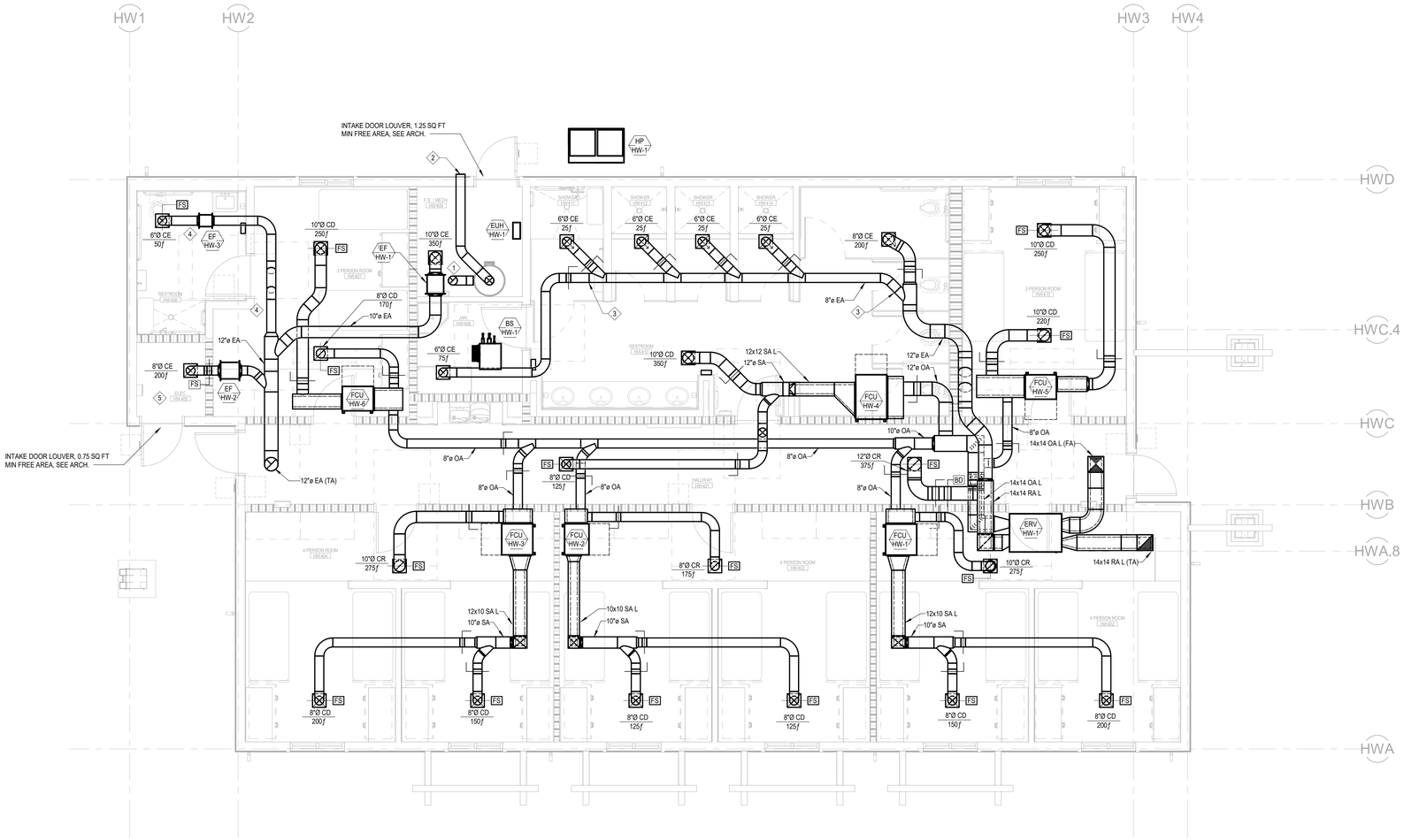

SHEET NOTES:

1. SEE M001 FOR TABLE OF BRANCH DUCT SIZES TO INDIVIDUAL DIFFUSERS, GRILLES & REGISTERS. SIZE SUPPLY AND RETURN AIR DUCT PLENUMS ENTERING AND LEAVING FAN COILS TO MATCH SIZE OF DUCT CONNECTIONS AT FAN COILS. LINE DUCT AS INDICATED ON PLANS.
2. SEE 1/M501 FOR MOUNTING OF COMBINATION FIRE SMOKE DAMPERS.

KEYNOTES:

1. CONNECT 8"Ø DUCT TO WATER HEATER EXHAUST AIR OUTLET WITH MANUFACTURER'S DUCT KIT AND INSTALL MANUFACTURER'S BOOSTER FAN IN VERTICAL DUCT SECTION BELOW ROOF TERMINATION.
2. CONNECT 8"Ø DUCT TO WATER HEATER AIR INLET WITH MANUFACTURER'S DUCT KIT, TERMINATE DUCT AT EXTERIOR WALL WITH GREENHECK 'WC-8' WALL CAP.
3. EXHAUST DUCT, INCLUDING ALL BRANCHES, BETWEEN KEYNOTE LOCATIONS SHALL BE ALUMINUM CONSTRUCTION.
4. EXHAUST BRANCH SERVING SHOWER ROOM SHALL BE ALUMINUM CONSTRUCTION.
5. ELECTRICAL POWER METER, PROVIDED BY BAS CONTRACTOR. COORDINATE LOCATION AND INSTALLATION WITH DIV 26. SEE 2/M604 AND 1/M600.

1 M201HW WOMEN'S HOUSING HVAC FLOOR PLAN
SCALE: 1/4" = 1'-0"

Plot Date: 3/19/2021 12:03:05 PM
File Name: L:\Revit Local Files\CEQ_DGS (CCC Willits_Dorm_Women_MP18_Central_jdvuaKTH47.rvt

IDENTIFICATION STAMP
DIV. OF THE STATE ARCHITECT
APP: 02-118630 INC:
REVIEWED FOR
SS ☐ FLS ☐ ACS ☑
DATE: 04/13/2021

OFFICE OF THE STATE FIRE MARSHAL
APPROVED FIRE AND PANIC ONLY
Approval of this plan does not authorize or approve any omission or deviation from applicable regulations. Final approval is subject to field inspection. One set of approved plans shall be available on the project site at all times.
PERMIT NO. 20-N-2332-CP
REVIEWED BY: LEO CATAYLO, OSFM
DATE: 4 / /2021

DGS GENERAL SERVICES
Department of General Services
State of California
Real Estate Services Division
Project Management & Development Branch
707 Third Street, Suite 4-105
West Sacramento, California 95605

NICHOLS MELBURG & ROSSETTO ARCHITECTS + ENGINEERS
300 Knollcrest Drive
Redding, CA. 96002
(530) 222-3300 (530) 222-3538 FAX
http://www.nmrdesign.com

Copyright © 2019
All ideas, designs, arrangements and plans indicated or represented by this drawing are owned by, and the property of, NICHOLS, MELBURG and ROSSETTO and were created, evolved and developed for use on, and in conjunction with, the specified project. None of such ideas, designs, arrangements or plans shall be used by, or disclosed to any person, firm or corporation for any purpose whatsoever without the written permission of NICHOLS, MELBURG and ROSSETTO.

LICENSE STAMPS
REGISTERED PROFESSIONAL ENGINEER
M 33498
EXPIRES 9/30/22
MECHANICAL
STATE OF CALIFORNIA
DATE SIGNED: 10-20-20

CONSULTANT
CAPITAL ENGINEERING CONSULTANTS, INC.
RANCHO CORDOVA, CALIFORNIA
JD - HC/JH — PM - DESIGN TEAM
181205.00 — PROJECT NO.

DRAWING STATUS
CONSTRUCTION DOCUMENTS

ISSUE

No.	Date	Description
1	10/22/2020	INITIAL PLAN REVIEW
2	01/22/2021	AGENCY RESUBMITTAL
3	03/22/2021	AGENCY RESUBMITTAL

If drawing is not 30" x 42" it is a reduced print

PROJECT
RESIDENTIAL CENTER, UKIAH: REPLACEMENT OF EXISTING RESIDENTIAL CENTER
440 EAST HILL ROAD
WILLITS, CALIFORNIA 95490
MENDOCINO COUNTY
CALIFORNIA CONSERVATION CORP

Supervisor	Designed	Drawn
		Author

DSA Application No.
02-118630

SHEET TITLE
WOMEN'S HOUSING HVAC FLOOR PLAN

DGS Project Number	NMR Project Number
0000000000001826	18-6456

Reference North
Sheet Scale 1/4" = 1'-0"
Sheet Number M201HW

ISSUE DATE
July 9, 2021

KEYNOTES:

1. PROVIDE DUCT PLENUM CONNECTION TO LOUVER. SIZED TO MATCH LOUVER DIMENSIONS.

1 M202HW WOMEN'S HOUSING HVAC PLENUM PLAN
SCALE: 1/4" = 1'-0"

Plot Date: 3/16/2021 12:03:01 PM
File Name: L:\Revit Local Files\CEC_DGS CCC Willits_Dorm_Women_MP18_Central_jduvall\TH47.rvt

IDENTIFICATION STAMP
DIV. OF THE STATE ARCHITECT
APP: 02-118630 INC:
REVIEWED FOR
SS ☐ FLS ☐ ACS ☑
DATE: 04/13/2021

OFFICE OF THE STATE FIRE MARSHAL
APPROVED FIRE AND PANIC ONLY
Approval of this plan does not authorize or approve any omission or deviation from applicable regulations. Final approval is subject to field inspection. One set of approved plans shall be available on the project site at all times.
PERMIT NO. 20-N-2332-CP
REVIEWED BY: LEO CATAYLO, OSFM
DATE: 4 / /2021

GENERAL SERVICES
Department of General Services
State of California
Real Estate Services Division
Project Management & Development Branch
707 Third Street, Suite 4-105
West Sacramento, California 95605

NICHOLS MELBURG & ROSSETTO
ARCHITECTS + ENGINEERS
300 Knollcrest Drive
Redding, CA. 96002
(530) 222-3300 (530) 222-3538 FAX
http://www.nmrdesign.com

Copyright © 2019
All ideas, designs, arrangements and plans indicated or represented by this drawing are owned by, and the property of, NICHOLS, MELBURG and ROSSETTO and were created, evolved and developed for use on, and in conjunction with, the specified project. None of such ideas, designs, arrangements or plans shall be used by, or disclosed to any person, firm or corporation for any purpose whatsoever without the written permission of NICHOLS, MELBURG and ROSSETTO.

LICENSE STAMPS

REGISTERED PROFESSIONAL ENGINEER
M 33498
EXPIRES 9/30/22
MECHANICAL
STATE OF CALIFORNIA
DATE SIGNED: 10-20-20

CONSULTANT

CAPITAL
ENGINEERING CONSULTANTS, INC.
RANCHO CORDOVA, CALIFORNIA
JD - HC/JH — PM - DESIGN TEAM
181205.00 — PROJECT NO.

DRAWING STATUS
CONSTRUCTION DOCUMENTS

ISSUE

No.	Date	Description
1	10/22/2020	INITIAL PLAN REVIEW
2	01/22/2021	AGENCY RESUBMITTAL
3	03/22/2021	AGENCY RESUBMITTAL

If drawing is not 30" x 42" it is a reduced print

PROJECT
RESIDENTIAL CENTER, UKIAH: REPLACEMENT OF EXISTING RESIDENTIAL CENTER
440 EAST HILL ROAD
WILLITS, CALIFORNIA 95490
MENDOCINO COUNTY
CALIFORNIA CONSERVATION CORP

Supervisor	Designed	Drawn
		Author

DSA Application No.
02-118630

SHEET TITLE
WOMEN'S HOUSING HVAC PLENUM PLAN

DGS Project Number: 0000000000001826
NMR Project Number: 18-6456

Reference North
Sheet Scale: 1/4" = 1'-0"
Sheet Number: M202HW

ISSUE DATE
July 9, 2021

SHEET NOTES:

1. SEE 8/M400 FOR VRF REFRIGERANT PIPING DIAGRAM & SIZES.
2. INDIVIDUAL REFRIGERANT PIPES ARE NOT MODELED. RECTANGULAR SHAPES ON FLOOR PLAN INDICATE PIPE GROUPINGS WITH MULTIPLE REFRIGERANT PIPES ROUTED TOGETHER. SHOWN FOR SPACE COORDINATION AND NOT TO REPRESENT ANY PIPING ENCLOSURE.

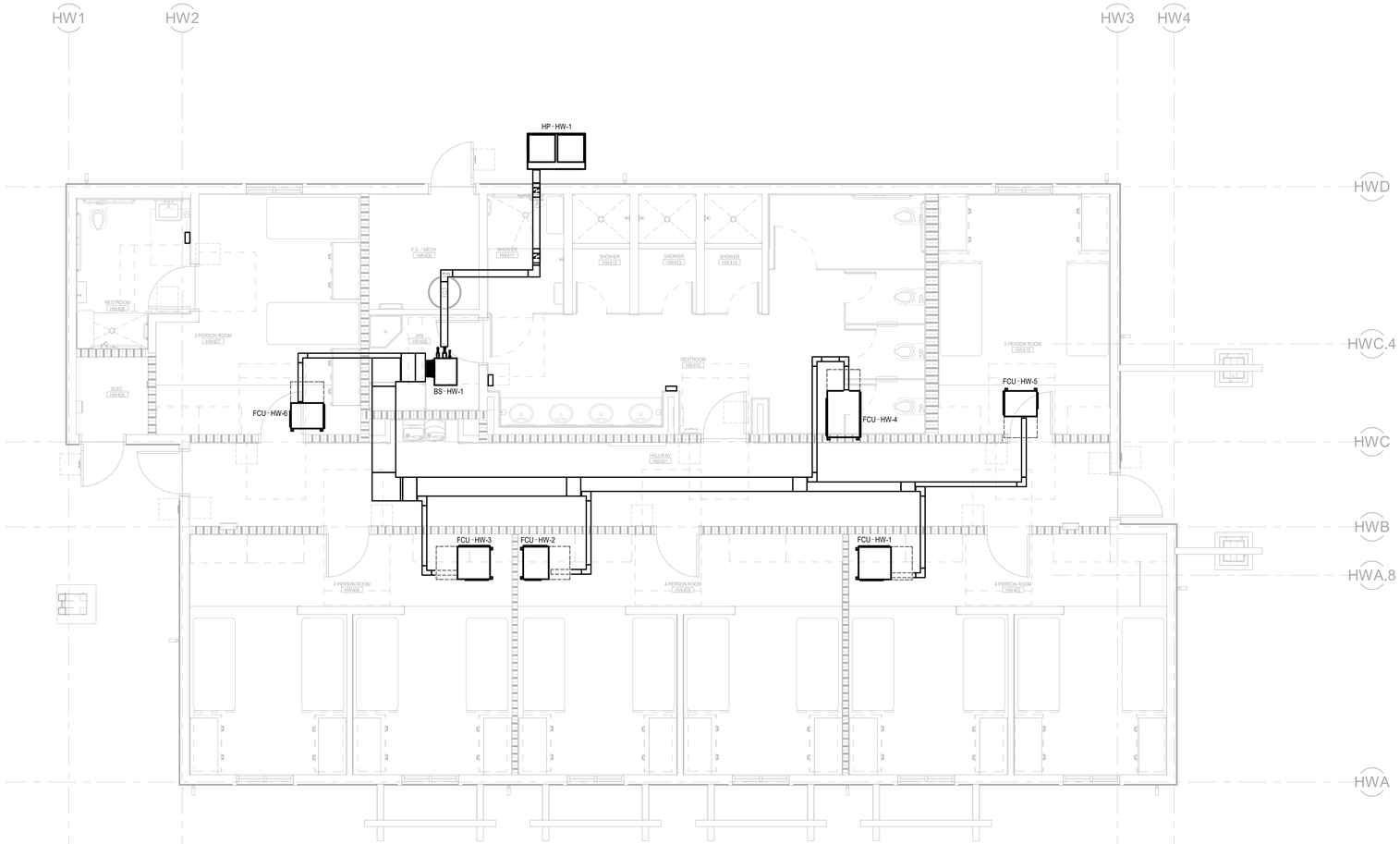

1 M301HW WOMEN'S HOUSING HVAC PIPING FLOOR PLAN

SCALE: 1/4" = 1'-0"

Plot Date: 3/19/2021 12:03:03 PM
File Name: L:\Revit Local Files\CECI_DGS CCC Willits_Dorm_Women_MP18_Central_jdcvalKTH47.rvt

IDENTIFICATION STAMP
DIV. OF THE STATE ARCHITECT
APP: 02-118630 INC:
REVIEWED FOR
SS ☐ FLS ☐ ACS ☑
DATE: 04/13/2021

OFFICE OF THE STATE FIRE MARSHAL
APPROVED FIRE AND PANIC ONLY
Approval of this plan does not authorize or approve any omission or deviation from applicable regulations. Final approval is subject to field inspection. One set of approved plans shall be available on the project site at all times.
PERMIT NO. 20-N-2332-CP
REVIEWED BY: LEO CATAYLO, OSFM
DATE: 4 / /2021

GENERAL SERVICES
Department of General Services
State of California
Real Estate Services Division
Project Management & Development Branch
707 Third Street, Suite 4-105
West Sacramento, California 95605

NICHOLS MELBURG & ROSSETTO
ARCHITECTS + ENGINEERS
300 Knollcrest Drive
Redding, CA. 96002
(530) 222-3300 (530) 222-3538 FAX
http://www.nmrdesign.com

Copyright © 2019
All ideas, designs, arrangements and plans indicated or represented by this drawing are owned by, and the property of, NICHOLS, MELBURG and ROSSETTO and were created, evolved and developed for use on, and in conjunction with, the specified project. None of such ideas, designs, arrangements or plans shall be used by, or disclosed to any person, firm or corporation for any purpose whatsoever without the written permission of NICHOLS, MELBURG and ROSSETTO

LICENSE STAMPS

REGISTERED PROFESSIONAL ENGINEER
KEVIN T. HOLT
M 33498
EXPIRES 9/30/22
MECHANICAL
STATE OF CALIFORNIA
DATE SIGNED: 10-20-20

CONSULTANT

CAPITAL
ENGINEERING CONSULTANTS, INC.
RANCHO CORDOVA, CALIFORNIA
JD - HC/JH (PM - DESIGN TEAM)
181205.00 (PROJECT NO.)

DRAWING STATUS
CONSTRUCTION DOCUMENTS

ISSUE

No.	Date	Description
1	10/22/2020	INITIAL PLAN REVIEW
2	01/22/2021	AGENCY RESUBMITTAL
3	03/22/2021	AGENCY RESUBMITTAL

If drawing is not 30" x 42" it is a reduced print

PROJECT
RESIDENTIAL CENTER, UKIAH: REPLACEMENT OF EXISTING RESIDENTIAL CENTER
440 EAST HILL ROAD
WILLITS, CALIFORNIA 95490
MENDOCINO COUNTY
CALIFORNIA CONSERVATION CORP

Supervisor	Designed	Drawn
		Author

DSA Application No.
02-118630

SHEET TITLE
WOMEN'S HOUSING HVAC PIPING FLOOR PLAN

DGS Project Number: 0000000000001826
NMR Project Number: 18-6456

Reference North
Sheet Scale: 1/4" = 1'-0"
Sheet Number: M301HW

ISSUE DATE
July 9, 2021

STATE OF CALIFORNIA
Mechanical Systems
NRCC-MCH-E — CALIFORNIA ENERGY COMMISSION

CERTIFICATE OF COMPLIANCE		NRCC-MCH-E
Project Name:	CCC Willits - Women's Housing	Report Page: (Page 1 of 10)
Project Address:		Date Prepared: 9/3/2020

This document is used to demonstrate compliance for mechanical systems that are within the scope of the permit application and are demonstrating compliance using the prescriptive path outlined in §140.4, or §141.0(b)2 for alterations .

A. GENERAL INFORMATION

01	Project Location (city)	Willits	04	Total Conditioned Floor Area	2560
02	Climate Zone	2	05	Total Unconditioned Floor Area	93
03	Occupancy Types Within Project:		06	# of Stories (Habitable Above Grade)	1
☐ Office (B)	☐ Retail (M)		☐ Non-refrigerated Warehouse (S)		
☐ Hotel/ Motel Guest Rooms (R-1)	☐ School (E)		☐ Healthcare Facility (H)		
☒ High-Rise Residential (R-2/R-3)	☐ Relocatable Class Bldg (E)		☒ Other (write in)		See Table J

B. PROJECT SCOPE

This table Includes mechanical systems or components that are within the scope of the permit application and are demonstrating compliance using the prescriptive path outlined in §140.4, or §141.0(b)2 for alterations .

01 Air System(s)	02 Wet System Components	03 Dry System Components
☒ Heating Air System	☐ Water Economizer	☐ Air Economizer
☒ Cooling Air System	☐ Pumps	☐ Electric Resistance Heat
Mechanical Controls	☐ System Piping	☒ Fan Systems
☒ Mechanical Controls	☐ Cooling Towers	☐ Ductwork
	☐ Chillers	☒ Ventilation
	☐ Boilers	☐ Zonal Systems/ Terminal Boxes

Registration Number: — Registration Date/Time: — Registration Provider: Energysoft

CA Building Energy Efficiency Standards - 2019 Nonresidential Compliance — Report Version: 2019.0.001 Schema Version: rev 20190401 — Report Generated: 2020-09-03 16:31:24

STATE OF CALIFORNIA
Mechanical Systems
NRCC-MCH-E — CALIFORNIA ENERGY COMMISSION

CERTIFICATE OF COMPLIANCE		NRCC-MCH-E
Project Name:	CCC Willits - Women's Housing	Report Page: (Page 2 of 10)
Project Address:		Date Prepared: 9/3/2020

C. COMPLIANCE RESULTS

Table C will indicate if the project data input into the compliance document is compliant with mechanical requirements. This table is not editable by the user. If this table says "DOES NOT COMPLY" or "COMPLIES with Exceptional Conditions" refer to Table D , or the table indicated as not compliant for guidance.

01		02		03		04		05		06		07		08	09
System Summary §110.1, §110.2, §140.4	AND	Pumps §140.4(k)	AND	Fans/ Economizers §140.4(c), §140.4(e)	AND	System Controls §110.2, §120.2, §140.4(f)	AND	Ventilation §120.1	AND	Terminal Box Controls §140.4(d)	AND	Distribution §120.3, §140.4(l)	AND	Cooling Towers §110.2(e)2	Compliance Results
(See Table F)		(See Table G)		(See Table H)		(See Table I)		(See Table J)		(See Table K)		(See Table L)		(See Table M)	
Yes	AND		AND	Yes	AND	Yes	AND	Yes	AND		AND		AND		COMPLIES
Mandatory Measures Compliance (See Table C for Details)								COMPLIES							

D. EXCEPTIONAL CONDITIONS

This table is auto-filled with uneditable comments because of selections made or data entered in tables throughout the form.

E. ADDITIONAL REMARKS

This table includes remarks made by the permit applicant to the Authority Having Jurisdiction.

Registration Number: — Registration Date/Time: — Registration Provider: Energysoft

CA Building Energy Efficiency Standards - 2019 Nonresidential Compliance — Report Version: 2019.0.001 Schema Version: rev 20190401 — Report Generated: 2020-09-03 16:31:24

STATE OF CALIFORNIA
Mechanical Systems
NRCC-MCH-E — CALIFORNIA ENERGY COMMISSION

CERTIFICATE OF COMPLIANCE		NRCC-MCH-E
Project Name:	CCC Willits - Women's Housing	Report Page: (Page 3 of 10)
Project Address:		Date Prepared: 9/3/2020

F. HVAC SYSTEM SUMMARY (DRY & WET SYSTEMS)

This table is used to demonstrate compliance for mechanical equipment with mandatory requirements found in §110.1 and §110.2(a) and prescriptive requirements found in §140.4(a), §140.4(b) and §140.4(k) or §141.0(b)2 for alterations.

Dry System Equipment Sizing (includes air conditioners, condensers, heat pumps, VRF, furnaces and unit heaters)

01	02	03	04	05	06	07	08	09	10	11
Name or Item Tag	Equipment Category per Tables 110.2	Equipment Type per Tables 110.2 & Title 20	Smallest Size Available[1] §140.4(a)	Equipment Sizing per Mechanical Schedule (Btu/h) §140.4 (a&b)						
				Heating Output[2,3]			Cooling Output[2,3]		Load Calculations[3,4]	
				Per Design (kBtu/h)	Rated (kBtu/h)	Supp. Heating Output (kBtu/h)	Sensible Per Design (kBtu/h)	Rated (kBtu/h)	Total Heating Load	Total Sensible Cooling Load
HP-HW-1	Variable Refrigerant Flow	VRF heat pump, air cooled	Yes	59148	74327	0	64744	68057	23413	23383

[1] *FOOTNOTES: Equipment shall be the smallest size, within the available options of the desired equipment line, necessary to meet the design heating and cooling loads of the building per §140.4(a). Healthcare facilities are excepted.*

[2] *It is common practice to show rated output capacity on the equipment schedule. Sensible cooling output comes from specification sheet tables.*

[3] *If equipment is heating only, leave cooling output and load blank. If equipment is cooling only, leave heating output and load blank.*

[4] *Authority Having Jurisdiction may ask for load calculations used for compliance per §140.4(b).*

Dry System Equipment Efficiency (other than Package Terminal Air Conditioners (PTAC) and Package Terminal Heat Pumps (PTHP))

01	02	03	04	05	06	07	08	09
Name or Item Tag	Size Category (Btu/h)	Heating Mode				Cooling Mode		
		Rating Condition (°F)	Efficiency Unit	Minimum Efficiency Required per Tables 110.2 / Title 20	Design Efficiency	Efficiency Unit	Minimum Efficiency Required per Tables 110.2 / Title 20	Design Efficiency
HP-HW-1	65,000 and 135,000	47 Fdb/ 43 Fwb OSA	COP	3.3	3.68	EER IEER	11.0 14.6	13.9 21.3

G. PUMPS

This section does not apply to this project.

Registration Number: — Registration Date/Time: — Registration Provider: Energysoft

CA Building Energy Efficiency Standards - 2019 Nonresidential Compliance — Report Version: 2019.0.001 Schema Version: rev 20190401 — Report Generated: 2020-09-03 16:31:24

STATE OF CALIFORNIA
Mechanical Systems
NRCC-MCH-E — CALIFORNIA ENERGY COMMISSION

CERTIFICATE OF COMPLIANCE		NRCC-MCH-E
Project Name:	CCC Willits - Women's Housing	Report Page: (Page 4 of 10)
Project Address:		Date Prepared: 9/3/2020

H. FAN SYSTEMS & AIR ECONOMIZERS

This table is used to demonstrate compliance with prescriptive requirements found in §140.4(c), §140.4(e) and §140.4(m) for fan systems. Fan systems serving healthcare facilities, or those serving only process loads, are exempt from these requirements and do not need to be included in Table H.

System Name:	HP-HW-1	Economizer:[1]	Differential Temperature	Economizer Controls:	Designed per and (m)	System Fan Type:	Fixed Flow
01	02	03	04	05	06	07	08
						Fan Power Pressure Drop Adjustment - Table 140.4-B	
Fan Name or Item Tag	Fan Function	Qty	Maximum Design Supply Airflow (CFM)	HP Unit[2]	Design HP	Device	Design Airflow through Device (CFM)
VRF	Other (Transfer, VAV box)	1	1875	BHP	0.02		
VRF	Other (Transfer, VAV box)	1	0	BHP	0.01		
VRF	Other (Transfer, VAV box)	1	0	BHP	0.02		
VRF	Other (Transfer, VAV box)	1	0	BHP	0.02		
VRF	Other (Transfer, VAV box)	1	0	BHP	0.02		
VRF	Other (Transfer, VAV box)	1	0	BHP	0.02		
EF	Exhaust	1	0	BHP	0.03		
Total System Design Supply Airflow (CFM):			1875	Total System Design (B)HP:	0.15	**Maximum System Fan Power (B)HP:**	0

[1] *FOOTNOTES: Computer room economizers must meet requirements of §140.9(a) and will be documented on the NRCC-PRC-E document.*

[2] *If total filter pressure drop (SPa) is greater than 1 in WC, or 245 Pascal then enter it and total fan pressure drop across the fan (SPf) for system.*

Registration Number: — Registration Date/Time: — Registration Provider: Energysoft

CA Building Energy Efficiency Standards - 2019 Nonresidential Compliance — Report Version: 2019.0.001 Schema Version: rev 20190401 — Report Generated: 2020-09-03 16:31:24

STATE OF CALIFORNIA
Mechanical Systems
NRCC-MCH-E — CALIFORNIA ENERGY COMMISSION

CERTIFICATE OF COMPLIANCE		NRCC-MCH-E
Project Name:	CCC Willits - Women's Housing	Report Page: (Page 5 of 10)
Project Address:		Date Prepared: 9/3/2020

I. SYSTEM CONTROLS

This table is used to demonstrate compliance with mandatory controls in §110.2 and §120.2 and prescriptive controls in §140.4(f) and (n) or requirements in §141.0(b)2E for altered space conditioning systems.

01	02	03	04	05	06	07	08	09
System Name	System Zoning	Conditioned Floor Area Being Served (ft^2)	Thermostats §110.2(b) & (c)[1], §120.2(a)or §141.0(b)2E	Shut-Off Controls §120.2(e)	Isolation Zone Controls §120.2(e)	Demand Response §120.2(b)	Supply Air Temp. Reset §140.4(f)	Window Interlocks per §140.4(n)
HP-HW-1	Multi-zone w/ DDC to zone	<= 25,000 ft^2	Setback	Auto Timer Switch	4 Hour Timer	EMCS	Included	Provided

[1] *FOOTNOTES: Gravity gas wall heaters, gravity floor heaters, gravity room heaters, non-central electric heaters, fireplaces or decorative gas appliances, wood stoves are not required to have setback thermostats.*

*Notes: Controls with a * require a note in the space below explaining how compliance is achieved. EX: system 1: SA Temp Reset: Exempt because zones compliant with §140.4(d) ; EXCEPTION 1 to §140.4(f)

J. VENTILATION AND INDOOR AIR QUALITY

This table is used to demonstrate compliance with mandatory ventilation requirements in §120.1 and §120.2(e)3B for all nonresidential, high-rise residential and hotel/motel occupancies. For alterations, only ventsilition systems being altered within the scope of the permit application need to be documented in this table. In lieu of this table, the required outdoor ventilation rates and airflows may be shown on the plans or the calculations can be presented in a spreadsheet.

01	☐	Check the box if the project is showing ventilation calculations on the plans, or attaching the calculations instead of completing this table.
02	☒	Check this box if the project included new or altered high-rise residential dwelling units.
03	☐	Check the box if the project is using natural ventilation in any nonresidential or hotel/motel spaces to meet required ventilation rates per §120.1(c)2.

Nonresidential and Hotel/ Motel Ventilation Systems

04	05			06		07
System Name	HP-HW-1	System Design OA CFM Airflow[1]	123.96	System Design Transfer Air CFM	0	Air Filtration per §120.1(c) and §141.0(b)2 [2] Provided per §120.1(c) (NR and Hotel/Motel))
08	09	10 11	12	13 14	15	16

Registration Number: — Registration Date/Time: — Registration Provider: Energysoft

CA Building Energy Efficiency Standards - 2019 Nonresidential Compliance — Report Version: 2019.0.001 Schema Version: rev 20190401 — Report Generated: 2020-09-03 16:31:24

STATE OF CALIFORNIA
Mechanical Systems
NRCC-MCH-E — CALIFORNIA ENERGY COMMISSION

CERTIFICATE OF COMPLIANCE		NRCC-MCH-E
Project Name:	CCC Willits - Women's Housing	Report Page: (Page 6 of 10)
Project Address:		Date Prepared: 9/3/2020

J. VENTILATION AND INDOOR AIR QUALITY

Space Name ot item Tag	Mechanical Ventilation Required per §120.1(c1) [3]				Exh. Vent per §120.1(c)4		DCV or Sensor Controls per §120.1(d)3, §120.1(d)5, and §120.1(e)3 [6]	
	Occupancy Type[4]	Conditioned Floor Area (ft^2)	# of Shower heads/ toilets	# of people[5]	Required Min OA CFM	Provided per Design CFM	DCV	NA: Not required per §120.1(d)3
							Occ Sensor	
FCU-HW-4	Toilet, public	928			0	0	0		

[1] *FOOTNOTES: System CFM should include both mechanical and natural ventilation for the zone/system*

[2] *Air filtration requirements apply to the following three system types per §120.1(c)1A : space conditioning systems utilizing ducts to supply air to occupiable space; supply-only ventilation systems providing outside air to occupiable space; supply side of balanced ventilation systems including heat recovery and energy recovery ventilation systems providing outside air to occupiable space.*

[3] *Uniform Mechanical Code may have more stringent ventilation requirements; the most stringent code requirement takes precedence.*

[4] *See Standards Tables 120.1-A and 120.1-B.*

[5] *For lecture halls with fixed seating, the expected number of occupants shall be shall be determined in accordance with the California Building Code.*

[6] *§120.2(e)3 requires systems serving rooms that are required by §130.1(c) to have lighting occupancy sensing controls to also have occupancy sensing zone controls for ventilation. Examples of spaces which require lighting occupancy sensors include offices 250ft^2 or smaller, multipurpose rooms less than 1,000 ft^2, classrooms, conference rooms, restrooms, aisles and open areas in warehouses, library book stack aisles, corridors, stairwells, parking garages, and loading and unloading zones, unless excepted by §130.1(c).*

High-rise Residential Dwelling Unit Ventilation Systems

19	20	21	22	23	24	25	26		27
Space Name ot Item Tag	Mechanical Ventilation Required per §120.1(b)				Ventilation per Design		Local Exhaust		Air Filtration per §120.1(b) [3]
	Conditioned Floor Area (ft^2)	# of Bedrooms	# of Dwelling Units	Required Min OA CFM[1]	Supply Air CFM	Exhaust CFM			
FCU-HW-1	373	1	1	26.2	0	0	☒	Bathroom IAQ	Provided per
							☒	Bathroom IAQ and Vent.	
							☒	Kitchen Range Hood[2]	

Registration Number: — Registration Date/Time: — Registration Provider: Energysoft

CA Building Energy Efficiency Standards - 2019 Nonresidential Compliance — Report Version: 2019.0.001 Schema Version: rev 20190401 — Report Generated: 2020-09-03 16:31:24

STATE OF CALIFORNIA
Mechanical Systems
NRCC-MCH-E — CALIFORNIA ENERGY COMMISSION

CERTIFICATE OF COMPLIANCE		NRCC-MCH-E
Project Name:	CCC Willits - Women's Housing	Report Page: (Page 7 of 10)
Project Address:		Date Prepared: 9/3/2020

J. VENTILATION AND INDOOR AIR QUALITY

FCU-HW-2	380	1	1	26.4	0	0	☒	Bathroom IAQ	Provided per
							☒	Bathroom IAQ and Vent.	
							☒	Kitchen Range Hood[2]	
FCU-HW-3	377	1	1	26.3	0	0	☒	Bathroom IAQ	Provided per
							☒	Bathroom IAQ and Vent.	
							☒	Kitchen Range Hood[2]	
FCU-HW-5	206	1	1	21.2	0	0	☒	Bathroom IAQ	Provided per
							☒	Bathroom IAQ and Vent.	
							☒	Kitchen Range Hood[2]	
FCU-HW-6	296	1	1	23.9	0	50	☒	Bathroom IAQ	Provided per
							☒	Bathroom IAQ and Vent.	
							☒	Kitchen Range Hood[2]	
28	Is this a balanced system[4]		No	29	Meeting Outside Air Requirements?				Yes

[1] *FOOTNOTES: Uniform Mechanical Code may have more stringent ventilation requirements; the most stringent code requirement takes precedence.*

[2] *Kitchen range hood will be verified per NA7.18.1 to confirm model is rated by HVI.*

[3] *Air filtration requirements apply to the following three system types per §120.1(c)1A : space conditioning systems utilizing ducts to supply air to occupiable space; supply-only ventilation systems providing outside air to occupiable space; supply side of balanced ventilation systems including heat recovery and energy recovery ventilation systems providing outside air to occupiable space.*

[4] *A balanced ventilation system provides ventilation airflow to each dwelling-unit at a rate equal to or greater than the required minimum rate, but not more than twenty percent.*

K. TERMINAL BOX CONTROLS

This section does not apply to this project.

L. DISTRIBUTION (DUCTWORK and PIPING)

This section does not apply to this project.

M. COOLING TOWERS

This section does not apply to this project.

Registration Number: — Registration Date/Time: — Registration Provider: Energysoft

CA Building Energy Efficiency Standards - 2019 Nonresidential Compliance — Report Version: 2019.0.001 Schema Version: rev 20190401 — Report Generated: 2020-09-03 16:31:24

STATE OF CALIFORNIA
Mechanical Systems
NRCC-MCH-E — CALIFORNIA ENERGY COMMISSION

CERTIFICATE OF COMPLIANCE		NRCC-MCH-E
Project Name:	CCC Willits - Women's Housing	Report Page: (Page 8 of 10)
Project Address:		Date Prepared: 9/3/2020

N. DECLARATION OF REQUIRED CERTIFICATES OF INSTALLATION

Selections have been made based on information provided in previous tables of this document. If any selection needs to be changed, please explain why in Table E Additional Remarks. These documents must be provided to the building inspector during construction and can be found online at https://www.energy.ca.gov/title24/2019standards/2019_compliance_documents/Nonresidential_Documents/NRCI/

Yes	No	Form/Title	Field Inspector Pass	Fail
●	○	NRCI-MCH-01-E - Must be submitted for all buildings	☐	☐

O. DECLARATION OF REQUIRED CERTIFICATES OF ACCEPTANCE

Selections have been made based on information provided in previous tables of this document. If any selection needs to be changed, please explain why in Table E Additional Remarks. These documents must be provided to the building inspector during construction and can be found online at https://www.energy.ca.gov/title24/2019standards/2019_compliance_documents/Nonresidential_Documents/NRCA/

Yes	No	Form/Title	Field Inspector Pass	Fail
●	○	NRCA-MCH-02-A - Outdoor Air must be submitted for all newly installed HVAC units. Note: MCH-02-A can be performed in conjunction with MCH-07-A Supply Fan VFD Acceptance (if applicable) since testing activities overlap.	☐	☐
○	●	NRCA-MCH-03-A - Constant Volume Single Zone HVAC NOTE: This form does not automatically move to 'Yes'. If Constant Volume Single Zone HVAC Systems are included in the scope, permit applicant should move this form to "Yes".	☐	☐
○	●	NRCA-MCH-04-A - Air Distribution Duct Leakage	☐	☐
○	●	NRCA-MCH-05-A - Air Economizer Controls	☐	☐
○	●	NRCA-MCH-06-A Demand Control Ventilation Systems must be submitted for all systems required to employ demand controlled ventilation (refer to §120.1(c)3) can vary outside ventilation flow rates based on maintaining interior carbon dioxide (CO2) concentration setpoints.	☐	☐
○	●	NRCA-MCH-07-A Supply Fan Variable Flow Controls	☐	☐
○	●	NRCA-MCH-08-A Valve Leakage Test	☐	☐
○	●	NRCA-MCH-09-A Supply Water Temperature Reset Controls	☐	☐
○	●	NRCA-MCH-10-A Hydronic System Variable Flow Controls	☐	☐
●	○	NRCA-MCH-11-A Automatic Demand Shed Controls	☐	☐
○	●	NRCA-MCH-12-A FDD for Packaged Direct Expansion Units	☐	☐
○	●	NRCA-MCH-13-A Automatic FDD for Air Handling Units and Zone Terminal Units Acceptance	☐	☐

Registration Number: — Registration Date/Time: — Registration Provider: Energysoft

CA Building Energy Efficiency Standards - 2019 Nonresidential Compliance — Report Version: 2019.0.001 Schema Version: rev 20190401 — Report Generated: 2020-09-03 16:31:24

STATE OF CALIFORNIA
Mechanical Systems
NRCC-MCH-E — CALIFORNIA ENERGY COMMISSION

CERTIFICATE OF COMPLIANCE		NRCC-MCH-E
Project Name:	CCC Willits - Women's Housing	Report Page: (Page 9 of 10)
Project Address:		Date Prepared: 9/3/2020

O. DECLARATION OF REQUIRED CERTIFICATES OF ACCEPTANCE

○	●	NRCA-MCH-14-A Distributed Energy Storage DX AC Systems Acceptance NOTE: This form does not automatically move to "Yes". If Distributed Energy System DX AC Systems are included in teh scope permit applicant should move this form to Yes".	☐	☐
○	●	NRCA-MCH-15-A Thermal Energy Storage (TES) System Acceptance NOTE: This form does not automatically move to "Yes". If Chilled water Storage, Ice-on-Coil Internal Melt, Ice-on-Coil External melt, Ice Harvester, Brine, Ice-Slurry, Eutecti Salt, Clathrate Hydrate Slurry (CHS), Cryogenic or Encapsulated (Ice Ball) Systems are included in the scope, permit applicant should move this form to "Yes".	☐	☐
○	●	NRCA-MCH-16-A Supply Air Temperature Reset Controls	☐	☐
○	●	NRCA-MCH-17-A Condenser Water Temperature Reset Controls	☐	☐
○	●	NRCA-MCH-18-A Energy Management Control Systems	☐	☐
○	●	NRCA-MCH-19-A Occupancy Sensor Controls	☐	☐
●	○	NRCA-MCH-20 Multi-Family Ventilation	☐	☐
●	○	NRCA-MCH-21 Multi-Family Envelope Leakage	☐	☐

P. DECLARATION OF REQUIRED CERTIFICATES OF VERIFICATION

Selections have been made based on information provided in previous tables of this document. If any selection needs to be changed, please explain why in Table E Additional Remarks. These documents must be completed by a HERS Rater and provided to the building inspector during construction. The final documents must be crated by a HERS Providrs registry, but drafts can be found online at https://www.energy.ca.gov/title24/2019standards/2019_compliance_documents/Nonresidential_Documents/NRCV/

Yes	No	Form/Title	Field Inspector Pass	Fail
○	●	NRCV-MCH-04-H Duct Leakaage Test *NOTE: Must be completed by a HERS Rater*	☐	☐
●	○	NRCV-MCH-24 Enclosure Air Leakaage Worksheet *NOTE: Must be completed by a HERS Rater*	☐	☐
●	○	NRCV-MCH-27 High-rise Resdential *NOTE: Must be completed by a HERS Rater*	☐	☐
●	○	NRCV-MCH-32 Local Mechanical Exhaust *NOTE: Must be completed by a HERS Rater*	☐	☐

Q. MANDATORY MEASURES DOCUMENTATION LOCATION

This table is used to indicate where mandatory measures are documented in the plan set or construction documentation.

01		02
Compliance with Mandatory Measures documented through MCH Mandatory Measures Note Block[1]	Yes	Plan sheet or construction document location M-Sheets

Registration Number: — Registration Date/Time: — Registration Provider: Energysoft

CA Building Energy Efficiency Standards - 2019 Nonresidential Compliance — Report Version: 2019.0.001 Schema Version: rev 20190401 — Report Generated: 2020-09-03 16:31:24

Plot Date: 3/19/2021 12:03:03 PM
File Name: L:\Revit Local Files\2ECI_DGS-CCC Willits_Dorm_Women_MP18_Central_jduvalKTH47.rvt

IDENTIFICATION STAMP
DIV. OF THE STATE ARCHITECT
APP: 02-118630 INC:
REVIEWED FOR
SS ☐ FLS ☐ ACS ☑
DATE: 04/13/2021

OFFICE OF THE STATE FIRE MARSHAL
APPROVED FIRE AND PANIC ONLY
Approval of this plan does not authorize or approve any omission or deviation from applicable regulations. Final approval is subject to field inspection. One set of approved plans shall be available on the project site at all times.
PERMIT NO. 20-N-2332-CP
REVIEWED BY: LEO CATAYLO, OSFM
DATE: 4 / /2021

DGS GENERAL SERVICES
Department of General Services
State of California
Real Estate Services Division
Project Management & Development Branch
707 Third Street, Suite 4-105
West Sacramento, California 95605

NICHOLS MELBURG & ROSSETTO ARCHITECTS + ENGINEERS
300 Knollcrest Drive
Redding, CA. 96002
(530) 222-3300 (530) 222-3538 FAX
http://www.nmrdesign.com

Copyright © 2019
All ideas, designs, arrangements and plans indicated or represented by this drawing are owned by, and the property of, NICHOLS, MELBURG and ROSSETTO and were created, evolved and developed for use on, and in conjunction with, the specified project. None of such ideas, designs, arrangements or plans shall be used by, or disclosed to any person, firm or corporation for any purpose whatsoever without the written permission of NICHOLS, MELBURG and ROSSETTO

LICENSE STAMPS
REGISTERED PROFESSIONAL ENGINEER — KEVIN D. BRANT — M 33498 — EXPIRES 9/30/22 — MECHANICAL — STATE OF CALIFORNIA
DATE SIGNED: 10-20-20

CONSULTANT
CAPITAL ENGINEERING CONSULTANTS, INC.
RANCHO CORDOVA, CALIFORNIA
JD - HCJH — PM - DESIGN TEAM
181205.00 — PROJECT NO.

DRAWING STATUS
CONSTRUCTION DOCUMENTS

ISSUE

No.	Date	Description
1	10/22/2020	INITIAL PLAN REVIEW
2	01/22/2021	AGENCY RESUBMITTAL
3	03/22/2021	AGENCY RESUBMITTAL

If drawing is not 30" x 42" it is a reduced print

PROJECT
RESIDENTIAL CENTER, UKIAH: REPLACEMENT OF EXISTING RESIDENTIAL CENTER
440 EAST HILL ROAD
WILLITS, CALIFORNIA 95490
MENDOCINO COUNTY
CALIFORNIA CONSERVATION CORP

Supervisor	Designed	Drawn
		Author

DSA Application No.
02-118630

SHEET TITLE
WOMEN'S HOUSING TITLE 24 COMPLIANCE

DGS Project Number	NMR Project Number
0000000000001826	18-6456

Sheet Scale

Sheet Number
M401HW

ISSUE DATE
July 9, 2021

STATE OF CALIFORNIA
Mechanical Systems
NRCC-MCH-E — CALIFORNIA ENERGY COMMISSION

CERTIFICATE OF COMPLIANCE		NRCC-MCH-E
Project Name:	CCC Willits - Women's Housing	Report Page: (Page 10 of 10)
Project Address:		Date Prepared: 9/3/2020

DOCUMENTATION AUTHOR'S DECLARATION STATEMENT

I certify that this Certificate of Compliance documentation is accurate and complete.

Documentation Author Name: Jessica Hughey	Documentation Author Signature:
Company: Capital Engineering Consultants Inc.	Signature Date: 10/20/2020
Address: 11020 Sun Center Dr. Suite 100	CEA/ HERS Certification Identification (if applicable):
City/State/Zip: Rancho Cordova CA 95670	Phone: (916) 850-3500

RESPONSIBLE PERSON'S DECLARATION STATEMENT

I certify the following under penalty of perjury, under the laws of the State of California:

1. The information provided on this Certificate of Compliance is true and correct.
2. I am eligible under Division 3 of the Business and Professions Code to accept responsibility for the building design or system design identified on this Certificate of Compliance (responsible designer)
3. The energy features and performance specifications, materials, components, and manufactured devices for the building design or system design identified on this Certificate of Compliance conform to the requirements of Title 24, Part 1 and Part 6 of the California Code of Regulations.
4. The building design features or system design features identified on this Certificate of Compliance are consistent with the information provided on other applicable compliance documents, worksheets, calculations, plans and specifications submitted to the enforcement agency for approval with this building permit application.
5. I will ensure that a completed signed copy of this Certificate of Compliance shall be made available with the building permit(s) issued for the building, and made available to the enforcement agency for all applicable inspections. I understand that a completed signed copy of this Certificate of Compliance is required to be included with the documentation the builder provides to the building owner at occupancy.

Responsible Designer Name: Kevin D. Stillman	Responsible Designer Signature:
Company: Capital Engineering Consultants, Inc.	Date Signed: 2020-09-03
Address: 11020 Sun Center Dr. Suite 100	License: M 33498
City/State/Zip: Rancho Cordova CA 95670	Phone:

Registration Number: — Registration Date/Time: — Registration Provider: Energysoft

CA Building Energy Efficiency Standards - 2019 Nonresidential Compliance — Report Version: 2019.0.001, Schema Version: rev 20190401 — Report Generated: 2020-09-03 16:31:24

STATE OF CALIFORNIA
Domestic Water Heating System
NRCC-PLB-E — CALIFORNIA ENERGY COMMISSION

CERTIFICATE OF COMPLIANCE		NRCC-PLB-E
Project Name:	CCC Willits - Women's Housing	Report Page: (Page 3 of 9)
Project Address:		Date Prepared: 9/3/2020

F. DOMESTIC HOT WATER EQUIPMENT

This table is used to demonstrate compliance with mandatory equipment requirements in §110.1 and §110.3. For high-rise residential and hotel/motel occupancies, compliance with prescriptive requirements in §150.1(c)8 must also be demonstrated and with §150.2 for addition and alteration scopes.

Equipment Schedule: Individual Systems

01	02	03	04	05	06
Name or Item Tag	Equipment Type	Volume (gal)	Max GPM/ First Hour Rating (FHR)	Rated Uniform Energy Factor (UEF)	Minimum Required Uniform Energy Factor (UEF)[1]

[1]*FOOTNOTE: Compliant equipment may be found in the Modernized Appliance Efficiency Database System (MAEDBS) on the Energy Commission website: https://cacertappliances.energy.ca.gov/Pages/Search/AdvancedSearch.aspx*

Water Heating Equipment in Individual Dwelling Units[1]

Equipment Type (select all that apply):

16	☐	Gas/propane instantaneous water heater with input rating <= 200,000 BTUH and no storage tank. Note: Can not comply using the prescriptive path with a storage tank per §150.1(c)8A) (New Construction Only)	
	☐	Gas/propane storage type water heater with input rating <= 75,000 BTUH (New Construction only)	
		☐	Rated volume <= 55 gal
		☐	Rated volume > 55 gal
	☒	A single heat pump water heater with storage tank located in the garage or conditioned space. (New Construction Only)	
		☐	Water heater meets the requirements of NEEA Advanced Water Heater Specification Tier 3 or higher.
	☐	A single heat pump water heater with storage tank located in the garage or conditioned space and be placed on an incompressible, rigid insulated surface with minimum R-10. (Alterations in climate zones 1-15 Only)	
		☐	Water heater meets the requirements of NEEA Advanced Water Heater Specification Tier 3 or higher.
	☐	No gas connection to existing water heater location for replacement water heater. Consumer electric water heater must meet Title 20 Appliance Efficiency requirements (see Equipment Schedule above) per §150.2(b)1H. (Alterations only)	

Registration Number: — Registration Date/Time: — Registration Provider: Energysoft

CA Building Energy Efficiency Standards - 2019 Nonresidential Compliance — Report Version: 2019.0.001, Schema Version: rev 20190401 — Report Generated: 2020-09-03 16:31:24

STATE OF CALIFORNIA
Domestic Water Heating System
NRCC-PLB-E — CALIFORNIA ENERGY COMMISSION

CERTIFICATE OF COMPLIANCE		NRCC-PLB-E
Project Name:	CCC Willits - Women's Housing	Report Page: (Page 6 of 9)
Project Address:		Date Prepared: 9/3/2020

G. DOMESTIC HOT WATER DISTRIBUTION SYSTEM

Mandatory Pipe Insulation All Occupancies

11	☒	For systems serving dwelling units, pipe insulation for the following applications is specified to have a minimum wall thickness of 1 in or a minimum R-value of 7.7 per §150.0(j)2A : • The first 5ft of cold water pipes form storage tank • All hot water piping with nominal diameter of 3/4 in - 1 in • All hot water piping with nominal diameter < 3/4 in associated with DHW recirculation systems • Piping with nominal diameter < 3/4 from heating source to storage tank or between tanks • Piping with nominal diameter < 3/4 buried below grade • All hot water pipes with nominal diameter < 3/4 from heating source to kitchen fixtures
12	☒	For systems serving nonresidential spaces, pipe insulation for the following applications is specified to comply with Table 120.3-A (see below) per §120.3 : • Recirculating system piping, including supply and return piping of the water heater • The first 8 ft of hot and cold outlet piping, including between storage tank and heat trap, for a nonrecirculating storage system • Pipes that are externally heated
13	☒	Insulation shall be protected from damage, including that due to sunlight, moisture, equipment maintenance, and wind. Insulation exposed to weather shall be installed with a cover suitable for outdoor service per §120.3(b) and §150.0(j)3

TABLE 120.3-A PIPE INSULATION THICKNESS

Fluid Temperature Range (°F)	Conductivity Range (Btu-in per hour per ft² per °F)	Insulation Mean Rating Temp (°F)	Nominal Pipe Diameter (in)		
			< 1	1 to < 1.5	1.5 to < 4
			Minimum Insulation Required		
105-140	0.22 - 0.28	100	1.0 in or R-7.7	1.5 in or R-12.5	1.5 in or R-11

Registration Number: — Registration Date/Time: — Registration Provider: Energysoft

CA Building Energy Efficiency Standards - 2019 Nonresidential Compliance — Report Version: 2019.0.001, Schema Version: rev 20190401 — Report Generated: 2020-09-03 16:31:24

STATE OF CALIFORNIA
Domestic Water Heating System
NRCC-PLB-E — CALIFORNIA ENERGY COMMISSION

CERTIFICATE OF COMPLIANCE		NRCC-PLB-E
Project Name:	CCC Willits - Women's Housing	Report Page: (Page 1 of 9)
Project Address:		Date Prepared: 9/3/2020

This document is used to demonstrate compliance for nonresidential occupancies with requirements in §110.1, §110.3, §120.3, and §140.5, and with requirements in §141.0 for additions and alterations, for domestic water heating scopes using the prescriptive path. For high-rise residential and hotel/motel occupancies compliance is demonstrated with requirements in §110.1, §110.3, §120.3, §150.0 and §150.1(c)8, and with requirements §150.2 for additions.

A. GENERAL INFORMATION

01	Project Location (city)	Willits	02	Climate Zone	2
03	Occupancy Types Within Project (select all that apply):				
☒	Nonresidential	☒ High-Rise Residential	☐ Hotel/Motel		
☐	State Building	☐ Healthcare Facility	☐ Other (Write In)		

B. PROJECT SCOPE

This table includes domestic water heating systems that are within the scope of the permit application and are demonstrating compliance using the prescriptive paths outlined in §140.5, §150.1(c)8, and §141.0(a), or §141.0(b)2N for additions or alterations. Solar water heating systems are documented on the NRCC-SRA compliance document. Combined hydronic water heating systems are documented on the NRCC-MCH compliance document.

01	02	03		
My project consists of (check all that apply):	System Type[1,2]	System Components		
☒ New system (DHW system being installed for the first time in newly constructed building)	Individual System (serving nonresidential spaces)	☒ Equipment	☒ Distribution	☒ Controls
☒ New system (DHW system being installed for the first time in newly constructed building)	Individual Dwelling Units System(s)	☒ Equipment	☒ Distribution	☒ Controls
☐ System Alteration (equipment, distribution or controls)		☐ Equipment	☐ Distribution	☐ Controls

[1]*FOOTNOTES: Point of use water heaters, or other non-central systems used to serve nonresidential spaces, are considered individual systems.*

[2] *Dwelling units refers to hotel/motel guest rooms and units in a high-rise residential occupancy.*

Registration Number: — Registration Date/Time: — Registration Provider: Energysoft

CA Building Energy Efficiency Standards - 2019 Nonresidential Compliance — Report Version: 2019.0.001, Schema Version: rev 20190401 — Report Generated: 2020-09-03 16:31:24

STATE OF CALIFORNIA
Domestic Water Heating System
NRCC-PLB-E — CALIFORNIA ENERGY COMMISSION

CERTIFICATE OF COMPLIANCE		NRCC-PLB-E
Project Name:	CCC Willits - Women's Housing	Report Page: (Page 4 of 9)
Project Address:		Date Prepared: 9/3/2020

F. DOMESTIC HOT WATER EQUIPMENT

	Yes	No	Not Applicable	Requirement
17	☐	☐	☒	For gas or prcpane water heaters serving individual dwelling units, the follow components are included in the design per §150.0(n)1 : (New Construction only) • Dedicated 125V, 20 amp electrical receptacle that is connected to the panel with a 120/240V 3 conductor, 10 AWG copper branch circuit within 3ft from the water heater that's accessible and with both ends of the unused conductor labeled with the word "spare" and be electrically isolated. A single pole circuit breaker space in the panel adjacent to the circuit breaker for the branch circuit is provided labeled with the word "future 240V use"; and • Category III or IV vent, or Type B vent with straight pipe between the outside termination and where the water heater is installed; and • Condensate drain that is no more than 2in higher than the base of the water heater and drains without pump assistance; and [• Gas supply line with a capacity of at least 200,000 BTUH

[1]*FOOTNOTE: Dwelling Units refers to hotel/motel guest rooms and units in a high-rise residential occupancy.*

Water Heating Equipment All Occupancies

	Yes	No	Not Applicable	Requirement
18	☐	☐	☒	Unfired storage tank insulation shall have Internal + External >=R-16 OR External >=R-12. Label required per §110.3(c)3
19	☐	☐	☒	New state buildings 60% of energy for service water heating from site solar energy or recovered energy per §110.3(c)5
20	☐	☐	☒	Isolation valves for instantaneous water heater with input rating <6.8 kBTUH or 2 kW has been specified per §110.3(c)6

Registration Number: — Registration Date/Time: — Registration Provider: Energysoft

CA Building Energy Efficiency Standards - 2019 Nonresidential Compliance — Report Version: 2019.0.001, Schema Version: rev 20190401 — Report Generated: 2020-09-03 16:31:24

STATE OF CALIFORNIA
Domestic Water Heating System
NRCC-PLB-E — CALIFORNIA ENERGY COMMISSION

CERTIFICATE OF COMPLIANCE		NRCC-PLB-E
Project Name:	CCC Willits - Women's Housing	Report Page: (Page 7 of 9)
Project Address:		Date Prepared: 9/3/2020

H. DOMESTIC HOT WATER CONTROLS

This table is used to demonstrate compliance with control requirements in §110.3 for all occupancies. For high-rise residential and hotel/motel occupancies, compliance is also demonstrated with requirements in §150.1(c)8

	Yes	No	Not Applicable	Requirement
01	☒	☐	☐	Construction documents require manufacturer certification that service water-heating systems are equipped with automatic temperature controls capable of adjusting temperature settings per §110.3(a).
02	☐	☐	☒	Systems with capacity > 167,000 BTUH equipped with outlet temperature controls per §110.3(c)1 unless covered by California Plumbing Code 613.0.
03	☐	☐	☒	Controls for circulating pumps or electrical heat trace systems are capable of automatically turning off the system per §110.3(c)2 unless systems serves healthcare facility.
04	☐	☐	☒	For recirculation systems serving multiple dwelling units, design includes automatic pump controls per §150.1(c)8Bii, or §150.2 for additions or alterations.
05	☐	☐	☒	For recirculation systems serving individual dwelling units, design includes manual on/off controls as specified in Reference Appendix RA4.4.9 per §150.1(c)8.
06	☐	☐	☒	For replacement single heat pump water heaters serving individual dwelling units in climate zone 1-15, design includes communication interface that meets demand responsive control requirements of §110.12(a) per §150.2(b)1Hiii.

I. DECLARATION OF REQUIRED CERTIFICATES OF INSTALLATION

Selections have been made based on information provided in this document. If any selection have been changed by permit applicant, an explanation should be included in Table E. Additional Remarks. These documents must be provided to the building inspector during construction and can be found online at https://www.energy.ca.gov/title24/2019standards/2019_compliance_documents/Nonresidential_Documents/NRCI/

Yes	No	Form/Title	Field Inspector	
			Pass	Fail
●	○	NRCI-PLB-01-E - Must be submitted for all buildings	☐	☐
○	●	NRCI-PLB-02-E - Must be submitted for high-rise residential and hotel/motel central hot water distribution systems to be recognized for compliance.	☐	☐
●	○	NRCI-PLB-03-E - Must be submitted for high-rise residential and hotel/motel single dwelling unit hot water distribution systems to be recognized for compliance.	☐	☐

Registration Number: — Registration Date/Time: — Registration Provider: Energysoft

CA Building Energy Efficiency Standards - 2019 Nonresidential Compliance — Report Version: 2019.0.001, Schema Version: rev 20190401 — Report Generated: 2020-09-03 16:31:24

STATE OF CALIFORNIA
Domestic Water Heating System
NRCC-PLB-E — CALIFORNIA ENERGY COMMISSION

CERTIFICATE OF COMPLIANCE		NRCC-PLB-E
Project Name:	CCC Willits - Women's Housing	Report Page: (Page 2 of 9)
Project Address:		Date Prepared: 9/3/2020

C. COMPLIANCE RESULTS

Table C will indicate if the project data input into the compliance document is compliant with water heating requirements. If this table says "DOES NOT COMPLY" or "COMPLIES with Exceptional Conditions" refer to Table D. or the table indicated as not compliant for guidance.

01	02	03	04
Domestic Hot Water Equipment	Distribution Systems	Controls	Compliance Results
Table F	Table G	Table H	
Yes	Yes	Yes	COMPLIES

D. EXCEPTIONAL CONDITIONS

This table is auto-filled with uneditable comments because of selections made or data entered in tables throughout the form.

E. ADDITIONAL REMARKS

This table is includes remarks made by the permit applicant to the Authority Having Jurisdiction.

Registration Number: — Registration Date/Time: — Registration Provider: Energysoft

CA Building Energy Efficiency Standards - 2019 Nonresidential Compliance — Report Version: 2019.0.001, Schema Version: rev 20190401 — Report Generated: 2020-09-03 16:31:24

STATE OF CALIFORNIA
Domestic Water Heating System
NRCC-PLB-E — CALIFORNIA ENERGY COMMISSION

CERTIFICATE OF COMPLIANCE		NRCC-PLB-E
Project Name:	CCC Willits - Women's Housing	Report Page: (Page 5 of 9)
Project Address:		Date Prepared: 9/3/2020

G. DOMESTIC HOT WATER DISTRIBUTION SYSTEM

This table is used to demonstrate compliance for nonresidential occupancies with distribution requirements in §120.3 and §140.5. For high-rise residential and hotel/motel occupancies, compliance is demonstrated with requirements §110.3(c), §120.3, §150.0, §150.1

Distribution in Individual Dwelling Units

	Yes	No	Not Applicable	Requirement
08	○	○	●	The dwelling unit is designed to have fenestration products with a weighted average U-factor <=0.24 plus one of the following options per §150.1(c)8Aii) : (New Construction Only) • Compact hot water distribution system field verified by a HERS Rater per Reference Appendix RA4.4.16 • A drain water heat recovery system that is field verified by a HERS rater per Reference Appendix RA3.6.9 ☐ Compact hot water distribution system ☐ A drain water heat recovery system
09	●	○	○	One of the following options is included in the design per §150.1(c)8Aiv : (New Construction only) • Compact hot water distribution system field verified by HERS rater per Reference Appendix RA4.4.6 and a drain water heat recovery system that is field verified by a HERS rater per Reference Appendix RA3.6.9 • A photovoltaic system capacity of 0.3kWdc (for climate zones 2-15) or 1.1kWcd (for climate zones 1 & 16) larger than the requirement specified in §150.1(c)14. ☐ Compact hot water distribution system and a drain water heat recovery system ☒ A photovoltaic system
10	○	○	●	One of the following options is included in the design per §150.1(c)8Av : (New Construction only) • Compact hot water distribution system per Reference Appendix RA4.4.6 for projects in climates zones 1 and 16. • A photovoltaic system capacity of 0.3kWdc (form climate zones 1 and 16) larger than the requirement specified in §150.1(c)14. ☐ Compact hot water distribution system ☐ A photovoltaic system

Registration Number: — Registration Date/Time: — Registration Provider: Energysoft

CA Building Energy Efficiency Standards - 2019 Nonresidential Compliance — Report Version: 2019.0.001, Schema Version: rev 20190401 — Report Generated: 2020-09-03 16:31:24

STATE OF CALIFORNIA
Domestic Water Heating System
NRCC-PLB-E — CALIFORNIA ENERGY COMMISSION

CERTIFICATE OF COMPLIANCE		NRCC-PLB-E
Project Name:	CCC Willits - Women's Housing	Report Page: (Page 8 of 9)
Project Address:		Date Prepared: 9/3/2020

J.DECLARATION OF REQUIRED CERTIFICATES OF ACCEPTANCE

There are no Certificates of Acceptance applicable to service water heating requirements.

K. DECLARATION OF REQUIRED CERTIFICATES OF VERIFICATION

Selections have been made based on information provided in this document. If any selection have been changed by permit applicant, an explanation should be included in Table E. Additional Remarks. These documents must be completed by a HERS Rater and provided to the building inspector during construction. The final documents must be created by a HERS Providers registry, but drafts can be found online at https://www.energy.ca.gov/title24/2019standards/2019_compliance_documents/Nonresidential_Documents/NRCI/

Yes	No	Form/Title	Field Inspector	
			Pass	Fail
○	●	NRCV-PLB-21-H High-rise Residential Central Hot Water Distribution HERS Verification	☐	☐
○	●	NRCV-PLB-22-H High-rise Residential Individual Dwelling Unit Hot Water Distribution HERS Verification	☐	☐

Registration Number: — Registration Date/Time: — Registration Provider: Energysoft

CA Building Energy Efficiency Standards - 2019 Nonresidential Compliance — Report Version: 2019.0.001, Schema Version: rev 20190401 — Report Generated: 2020-09-03 16:31:24

IDENTIFICATION STAMP
DIV. OF THE STATE ARCHITECT
APP: 02-118630 INC:
REVIEWED FOR
SS ☐ FLS ☐ ACS ☑
DATE: 04/13/2021

OFFICE OF THE STATE FIRE MARSHAL
APPROVED FIRE AND PANIC ONLY
Approval of this plan does not authorize or approve any omission or deviation from applicable regulations. Final approval is subject to field inspection. One set of approved plans shall be available on the project site at all times.
PERMIT NO. 20-N-2332-CP
REVIEWED BY: LEO CATAYLO, OSFM
DATE: 4/ /2021

DGS GENERAL SERVICES
Department of General Services
State of California
Real Estate Services Division
Project Management & Development Branch
707 Third Street, Suite 4-105
West Sacramento, California 95605

NICHOLS MELBURG & ROSSETTO ARCHITECTS + ENGINEERS
300 Knollcrest Drive
Redding, CA. 96002
(530) 222-3300 (530) 222-3538 FAX
http://www.nmrdesign.com

Copyright © 2019
All ideas, designs, arrangements and plans indicated or represented by this drawing are owned by, and the property of, NICHOLS, MELBURG and ROSSETTO and were created, evolved and developed for use on, and in conjunction with, the specified project. None of such ideas, designs, arrangements or plans shall be used by, or disclosed to any person, firm or corporation for any purpose whatsoever without the written permission of NICHOLS, MELBURG and ROSSETTO.

LICENSE STAMPS

REGISTERED PROFESSIONAL ENGINEER — KEVIN D. STILLMAN — M 33498 — EXPIRES 9/30/22 — MECHANICAL — STATE OF CALIFORNIA
DATE SIGNED: 10-20-20

CONSULTANT

CAPITAL ENGINEERING CONSULTANTS, INC.
RANCHO CORDOVA, CALIFORNIA
JD - HCJH — PM - DESIGN TEAM
181205.00 — PROJECT NO.

DRAWING STATUS
CONSTRUCTION DOCUMENTS

ISSUE

No.	Date	Description
1	10/22/2020	INITIAL PLAN REVIEW
2	01/22/2021	AGENCY RESUBMITTAL
3	03/22/2021	AGENCY RESUBMITTAL

If drawing is not 30" x 42" it is a reduced print

PROJECT
RESIDENTIAL CENTER, UKIAH: REPLACEMENT OF EXISTING RESIDENTIAL CENTER
440 EAST HILL ROAD
WILLITS, CALIFORNIA 95490
MENDOCINO COUNTY
CALIFORNIA CONSERVATION CORP

Supervisor	Designed	Drawn
		Author

DSA Application No.
02-118630

SHEET TITLE
WOMEN'S HOUSING TITLE 24 COMPLIANCE

DGS Project Number	NMR Project Number
0000000000001826	18-6456

Sheet Scale

Sheet Number
M402HW

ISSUE DATE
July 9, 2021

Plot Date: 3/19/2021 12:05:05 PM
File Name: L:\Revit Local Files\2ECI_DGS CCC Willits_Dorm_Women_MP18_Central_jduvalKTH47.rvt

STATE OF CALIFORNIA

Domestic Water Heating System

NRCC-PLB-E — CALIFORNIA ENERGY COMMISSION

CERTIFICATE OF COMPLIANCE	**NRCC-PLB-E**
Project Name: CCC Willits - Women's Housing	**Report Page:** **(Page 9 of 9)**
Project Address:	**Date Prepared:** 9/3/2020

DOCUMENTATION AUTHOR'S DECLARATION STATEMENT

I certify that this Certificate of Compliance documentation is accurate and complete.

Documentation Author Name: Jessica Hughey	Documentation Author Signature:
Company: Capital Engineering Consultants Inc.	Signature Date: 10/20/2020
Address: 11020 Sun Center Dr. Suite 100	CEA/ HERS Certification Identification (if applicable):
City/State/Zip: Rancho Cordova CA 95670	Phone: (916) 850-3500

RESPONSIBLE PERSON'S DECLARATION STATEMENT

I certify the following under penalty of perjury, under the laws of the State of California:

1. The information provided on this Certificate of Compliance is true and correct.
2. I am eligible under Division 3 of the Business and Professions Code to accept responsibility for the building design or system design identified on this Certificate of Compliance (responsible designer)
3. The energy features and performance specifications, materials, components, and manufactured devices for the building design or system design identified on this Certificate of Compliance conform to the requirements of Title 24, Part 1 and Part 6 of the California Code of Regulations.
4. The building design features or system design features identified on this Certificate of Compliance are consistent with the information provided on other applicable compliance documents, worksheets, calculations, plans and specifications submitted to the enforcement agency for approval with this building permit application.
5. I will ensure that a completed signed copy of this Certificate of Compliance shall be made available with the building permit(s) issued for the building, and made available to the enforcement agency for all applicable inspections. I understand that a completed signed copy of this Certificate of Compliance is required to be included with the documentation the builder provides to the building owner at occupancy.

Responsible Designer Name: Kevin D. Stillman	Responsible Designer Signature:
Company: Capital Engineering Consultants, Inc.	Date Signed: 2020-09-03
Address: 11020 Sun Center Dr. Suite 100	License: M 33498
City/State/Zip: Rancho Cordova CA 95670	Phone:

Registration Number:

CA Building Energy Efficiency Standards - 2019 Nonresidential Compliance

Registration Date/Time:

Report Version: 2019.0.001
Schema Version: rev 20190401

Registration Provider: Energysoft

Report Generated: 2020-09-03 16:31:24

IDENTIFICATION STAMP
DIV. OF THE STATE ARCHITECT
APP: 02-118630 INC:
REVIEWED FOR
SS ☐ FLS ☐ ACS ☑
DATE: 04/13/2021

OFFICE OF THE STATE FIRE MARSHAL
APPROVED FIRE AND PANIC ONLY
Approval of this plan does not authorize or approve any omission or deviation from applicable regulations. Final approval is subject to field inspection. One set of approved plans shall be available on the project site at all times.
PERMIT NO. 20-N-2332-CP
REVIEWED BY: LEO CATAYLO, OSFM
DATE: 4 / /2021

DGS GENERAL SERVICES
Department of General Services
State of California
Real Estate Services Division
Project Management & Development Branch
707 Third Street, Suite 4-105
West Sacramento, California 95605

NICHOLS MELBURG & ROSSETTO
ARCHITECTS + ENGINEERS
300 Knollcrest Drive
Redding, CA. 96002
(530) 222-3300 (530) 222-3538 FAX
http://www.nmrdesign.com

Copyright © 2019
All ideas, designs, arrangements and plans indicated or represented by this drawing are owned by, and the property of, NICHOLS, MELBURG and ROSSETTO and were created, evolved and developed for use on, and in conjunction with, the specified project. None of such ideas, designs, arrangements or plans shall be used by, or disclosed to any person, firm or corporation for any purpose whatsoever without the written permission of NICHOLS, MELBURG and ROSSETTO.

LICENSE STAMPS

REGISTERED PROFESSIONAL ENGINEER
Kevin D. Stillman
M 33498
EXPIRES 8/30/22
MECHANICAL
STATE OF CALIFORNIA
DATE SIGNED: 10-20-20

CONSULTANT

CAPITAL
ENGINEERING CONSULTANTS, INC.
RANCHO CORDOVA, CALIFORNIA
JD - HC/JH — PM - DESIGN TEAM
181205.00 — PROJECT NO.

DRAWING STATUS
CONSTRUCTION DOCUMENTS

ISSUE

No.	Date	Description
1	10/22/2020	INITIAL PLAN REVIEW
2	01/22/2021	AGENCY RESUBMITTAL
3	03/22/2021	AGENCY RESUBMITTAL

If drawing is not 30" x 42" it is a reduced print

PROJECT
RESIDENTIAL CENTER, UKIAH: REPLACEMENT OF EXISTING RESIDENTIAL CENTER
440 EAST HILL ROAD
WILLITS, CALIFORNIA 95490
MENDOCINO COUNTY
CALIFORNIA CONSERVATION CORP

Supervisor	Designed	Drawn
		Author

DSA Application No.
02-118630

SHEET TITLE
WOMEN'S HOUSING
TITLE 24 COMPLIANCE

DGS Project Number: 0000000000001826
NMR Project Number: 18-6456

Sheet Scale

Sheet Number
M403HW

ISSUE DATE
July 9, 2021

Plot Date: 3/18/2021 12:03:08 PM
File Name: L:\Revit Local Files\CEC_DGS CCC Willits_Dorm_Women_MP18_Central_jduvall\KTH47.rvt

REFRIGERANT CONCENTRATION CALC

SYSTEM	REFRIGERANT		DESIGN ROOM FLOOR AREA [SQ FT]	DESIGN ROOM CLG HEIGHT [FT]	DESIGN ROOM VOLUME [CU FT]	CONCENTRATION [LBS / 1000 CF]	
	TYPE	CHARGE [LBS]				DESIGN	LIMIT
HP/MP-1	R-410A	25.8	106	11'-0"	1,166	22.1	26
SAC/MP-1	R-410A	1.1	316	9'-6"	3,002	0.4	26

NOTES:

1. DESIGN REFRIGERANT CHARGE IS CALCULATED USING BASIS OF DESIGN EQUIPMENT MANUFACTURER'S CATALOG DATA FOR FACTORY PRE-CHARGE AND ADDITIONAL CHARGE FOR ASSUMED LINE LENGTHS. INSTALLING CONTRACTOR SHALL PROVIDE UPDATED CALCULATIONS BASED ON ACTUAL REFRIGERANT CHARGE AND MAKE THEM AVAILABLE FOR REVIEW BY FIELD INSPECTOR OR OTHER AGENCIES.
2. CONCENTRATION LIMITS ARE TAKEN FROM 2019 CALIFORNIA MECHANICAL CODE TABLE 1102.3.

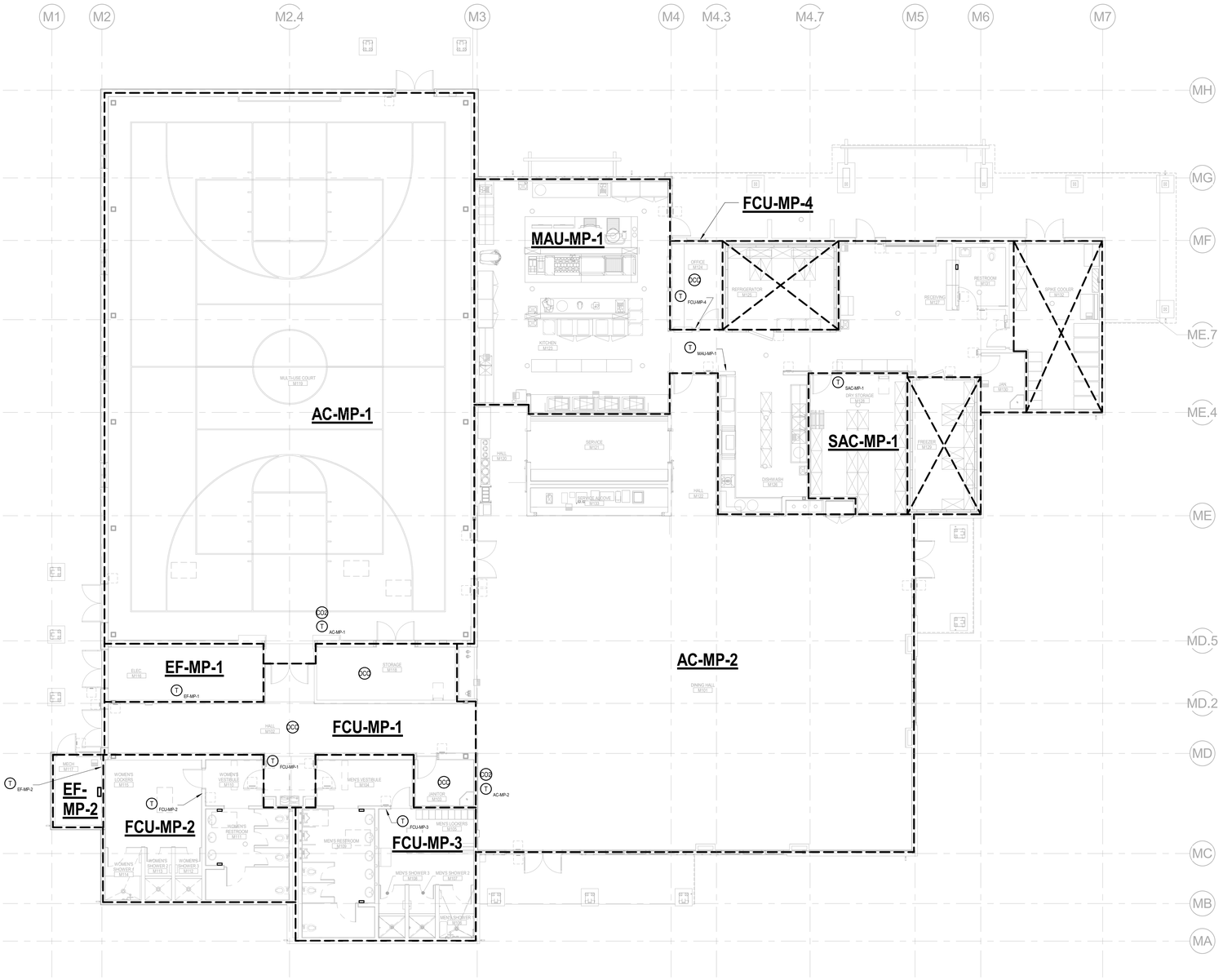

1 M101M MULTI-PURPOSE BLDG HVAC ZONE PLAN

SCALE: 1/8" = 1'-0"

Plot Date: 3/19/2021 1:25:42 PM
File Name: L:\Revit Local Files\#ECI_DGS CCC Willits_MP_MP18_Central_jduvall\KTH47.rvt

IDENTIFICATION STAMP
DIV. OF THE STATE ARCHITECT
APP: 02-118630 INC:
REVIEWED FOR
SS ☐ FLS ☐ ACS ☑
DATE: 04/13/2021

OFFICE OF THE STATE FIRE MARSHAL
APPROVED FIRE AND PANIC ONLY
Approval of this plan does not authorize or approve any omission or deviation from applicable regulations. Final approval is subject to field inspection. One set of approved plans shall be available on the project site at all times.
PERMIT NO. 20-N-2332-CP
REVIEWED BY: LEO CATAYLO, OSFM
DATE: 4/1/2021

GENERAL SERVICES
Department of General Services
State of California
Real Estate Services Division
Project Management & Development Branch
707 Third Street, Suite 4-105
West Sacramento, California 95605

NICHOLS MELBURG & ROSSETTO
ARCHITECTS + ENGINEERS
300 Knollcrest Drive
Redding, CA. 96002
(530) 222-3300 (530) 222-3538 FAX
http://www.nmrdesign.com

Copyright © 2019
All ideas, designs, arrangements and plans indicated or represented by this drawing are owned by, and the property of, NICHOLS, MELBURG and ROSSETTO and were created, evolved and developed for use on, and in conjunction with, the specified project. None of such ideas, designs, arrangements or plans shall be used by, or disclosed to any person, firm or corporation for any purpose whatsoever without the written permission of NICHOLS, MELBURG and ROSSETTO.

LICENSE STAMPS

REGISTERED PROFESSIONAL ENGINEER KEVIN T. HOLM M 33498 EXPIRES 9/30/22 MECHANICAL STATE OF CALIFORNIA
DATE SIGNED: 10-20-20

CONSULTANT

CAPITAL
ENGINEERING CONSULTANTS, INC.
RANCHO CORDOVA, CALIFORNIA
JD - HCJH (PM - DESIGN TEAM)
181205.00 (PROJECT NO.)

DRAWING STATUS
CONSTRUCTION DOCUMENTS

ISSUE

No.	Date	Description
1	10/22/2020	INITIAL PLAN REVIEW
2	01/22/2021	AGENCY RESUBMITTAL
3	03/22/2021	AGENCY RESUBMITTAL

If drawing is not 30" x 42" it is a reduced print

PROJECT
RESIDENTIAL CENTER, UKIAH: REPLACEMENT OF EXISTING RESIDENTIAL CENTER
440 EAST HILL ROAD
WILLITS, CALIFORNIA 95490
MENDOCINO COUNTY
CALIFORNIA CONSERVATION CORP

Supervisor	Designed	Drawn
		Author

DSA Application No.
02-118630

SHEET TITLE
MULTI-PURPOSE BLDG HVAC ZONE PLAN

DGS Project Number: 0000000000001826
NMR Project Number: 18-6456

Reference North
Sheet Scale: As indicated
Sheet Number: M101M

ISSUE DATE
July 9, 2021

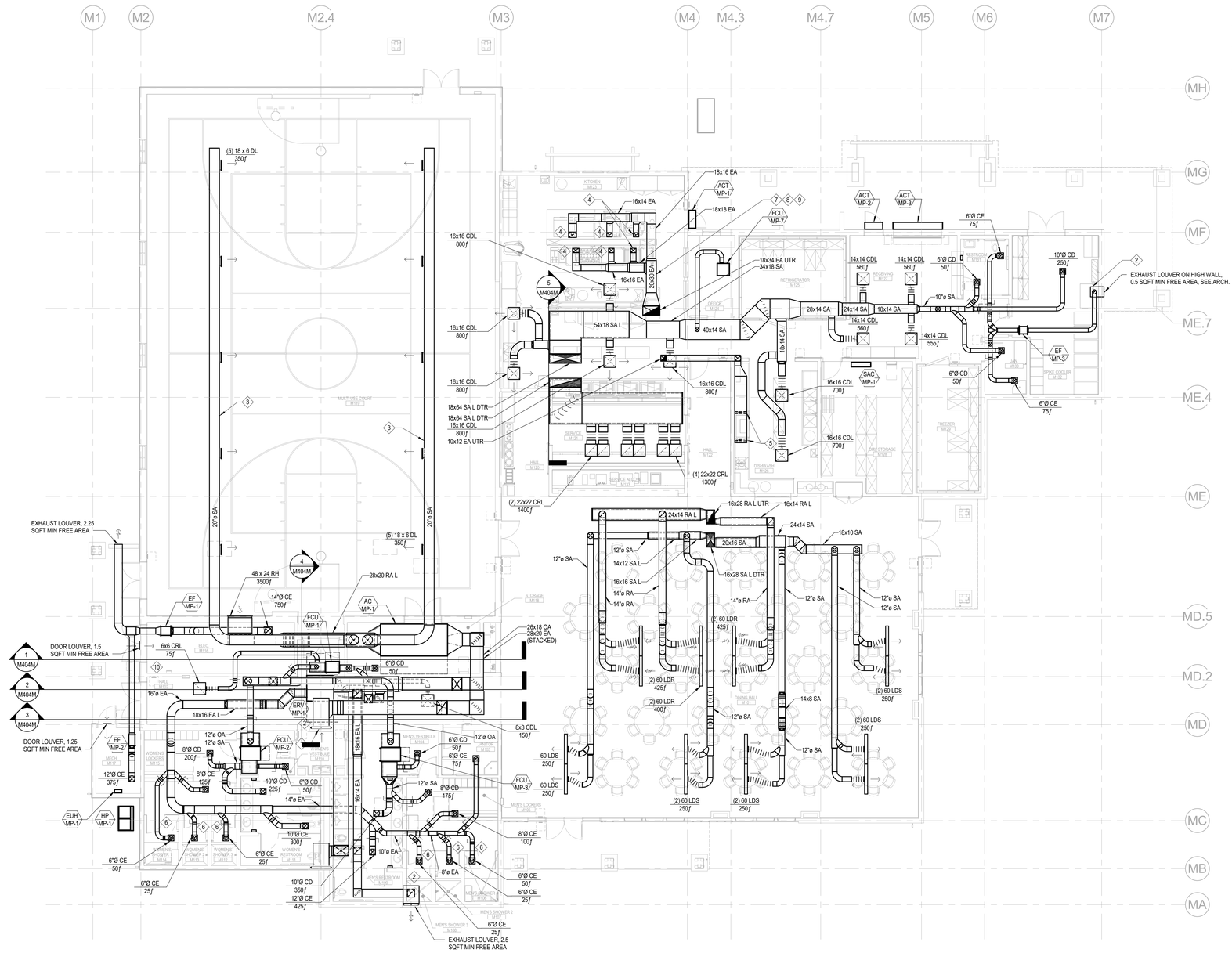

1 M201M MULTI-PURPOSE BLDG HVAC FLOOR PLAN

SCALE: 1/8" = 1'-0"

SHEET NOTES:

1. SEE M001 FOR TABLE OF BRANCH DUCT SIZES TO INDIVIDUAL DIFFUSERS, GRILLES & REGISTERS. SIZE SUPPLY AND RETURN AIR DUCT PLENUMS ENTERING AND LEAVING FAN COILS TO MATCH SIZE OF DUCT CONNECTIONS AT FAN COILS. LINE DUCT AS INDICATED ON PLANS.

KEY NOTES:

1. EXHAUST LOUVER ON HIGH WALL, 11.75 SQFT MIN FREE AREA, SEE ARCH.
2. PROVIDE DUCT PLENUM CONNECTION TO LOUVER. SIZED TO MATCH LOUVER DIMENSIONS.
3. SEE 14/M500 FOR MOUNTING OF GRILLES ON SPIRAL DUCT WITH MANUAL AIR DAMPERS.
4. CONNECT EXHAUST DUCT TO FUME HOODS, SEE FOOD SERVICE PLAN FS-112 FOR MORE INFORMATION.
5. CONNECT EXHAUST DUCT TO DISHWASHER, SEE FOOD SERVICE PLAN FS-112 FOR MORE INFORMATION.
6. EXHAUST BRANCH SERVING SHOWER ROOM SHALL BE ALUMINUM CONSTRUCTION.
7. PROVIDE CONTINUOUS UL-LISTED GREASE DUCT WRAP ASSEMBLY IN ACCORDANCE WITH 2019 CMC 510.7, SPECIFICATION SECTION 23 80 00, AND DETAIL 1/M502. DUCT WRAP SHALL EXEND TO TOP OF HOOD TO PROVIDE CONTINUOUS COVERAGE FROM THE POINT OF CEILING PENETRATION PER 2019 CMC 507.4.
8. ALL HORIZONTAL GREASE DUCT SHALL BE INSTALLED WITH MINIMUM 1/4" PER FOOT SLOPE BACK TOWARDS HOOD CONNECTION.
9. PROVIDE OPENINGS FOR INSPECTION AND CLEANING IN HORIZONTAL GREASE DUCT IN ACCORDANCE WITH 2019 CMC 510.3. OPENINGS IN LISTED DUCT WRAP ASSEMBLY SHALL BE INSTALLED IN STRICT ACCORDANCE WITH THE MANUFACTURER'S LISTED INSTALLATION INSTRUCTIONS.
10. ELECTRICAL POWER METER, PROVIDED BY BAS CONTRACTOR. COORDINATE LOCATION AND INSTALLATION WITH DIV 26. SEE 2/M604 AND 1/M600.

IDENTIFICATION STAMP
DIV. OF THE STATE ARCHITECT
APP: 02-118630 INC:
REVIEWED FOR
SS ☐ FLS ☐ ACS ☑
DATE: 04/13/2021

OFFICE OF THE STATE FIRE MARSHAL
APPROVED FIRE AND PANIC ONLY
Approval of this plan does not authorize or approve any omission or deviation from applicable regulations. Final approval is subject to field inspection. One set of approved plans shall be available on the project site at all times.
PERMIT NO. 20-N-2332-CP
REVIEWED BY: LEO CATAYLO, OSFM
DATE: 4 / /2021

GENERAL SERVICES
Department of General Services
State of California
Real Estate Services Division
Project Management & Development Branch
707 Third Street, Suite 4-105
West Sacramento, California 95605

NICHOLS MELBURG & ROSSETTO ARCHITECTS + ENGINEERS
300 Knollcrest Drive
Redding, CA. 96002
(530) 222-3300 (530) 222-3538 FAX
http://www.nmrdesign.com

Copyright © 2019
All ideas, designs, arrangements and plans indicated or represented by this drawing are owned by, and the property of, NICHOLS, MELBURG and ROSSETTO and were created, evolved and developed for use on, and in conjunction with, the specified project. None of such ideas, designs, arrangements or plans shall be used by, or disclosed to any person, firm or corporation for any purpose whatsoever without the written permission of NICHOLS, MELBURG and ROSSETTO

LICENSE STAMPS

REGISTERED PROFESSIONAL ENGINEER
KEVIN S. BAKER
M 33498
EXPIRES 9/30/22
MECHANICAL
STATE OF CALIFORNIA
DATE SIGNED: 10-20-20

CONSULTANT

CAPITAL
ENGINEERING CONSULTANTS, INC.
RANCHO CORDOVA, CALIFORNIA
JD - HCJH PM - DESIGN TEAM
181205.00 PROJECT NO.

DRAWING STATUS
CONSTRUCTION DOCUMENTS

ISSUE

No.	Date	Description
1	10/22/2020	INITIAL PLAN REVIEW
2	01/22/2021	AGENCY RESUBMITTAL
3	03/22/2021	AGENCY RESUBMITTAL

If drawing is not 30" x 42" it is a reduced print

PROJECT
RESIDENTIAL CENTER, UKIAH: REPLACEMENT OF EXISTING RESIDENTIAL CENTER
440 EAST HILL ROAD
WILLITS, CALIFORNIA 95490
MENDOCINO COUNTY
CALIFORNIA CONSERVATION CORP

Supervisor	Designed	Drawn
		Author

DSA Application No.
02-118630

SHEET TITLE
MULTI-PURPOSE BLDG HVAC FLOOR PLAN

DGS Project Number	NMR Project Number
0000000000001826	18-6456

Reference North
Sheet Scale 1/8" = 1'-0"
Sheet Number M201M

ISSUE DATE
July 9, 2021

Plot Date: 3/16/2021 1:25:49 PM
File Name: L:\Revit Local Files\EECI_DGS CCC Willits_MP_MP18_Central_jdovak\KTH47.rvt

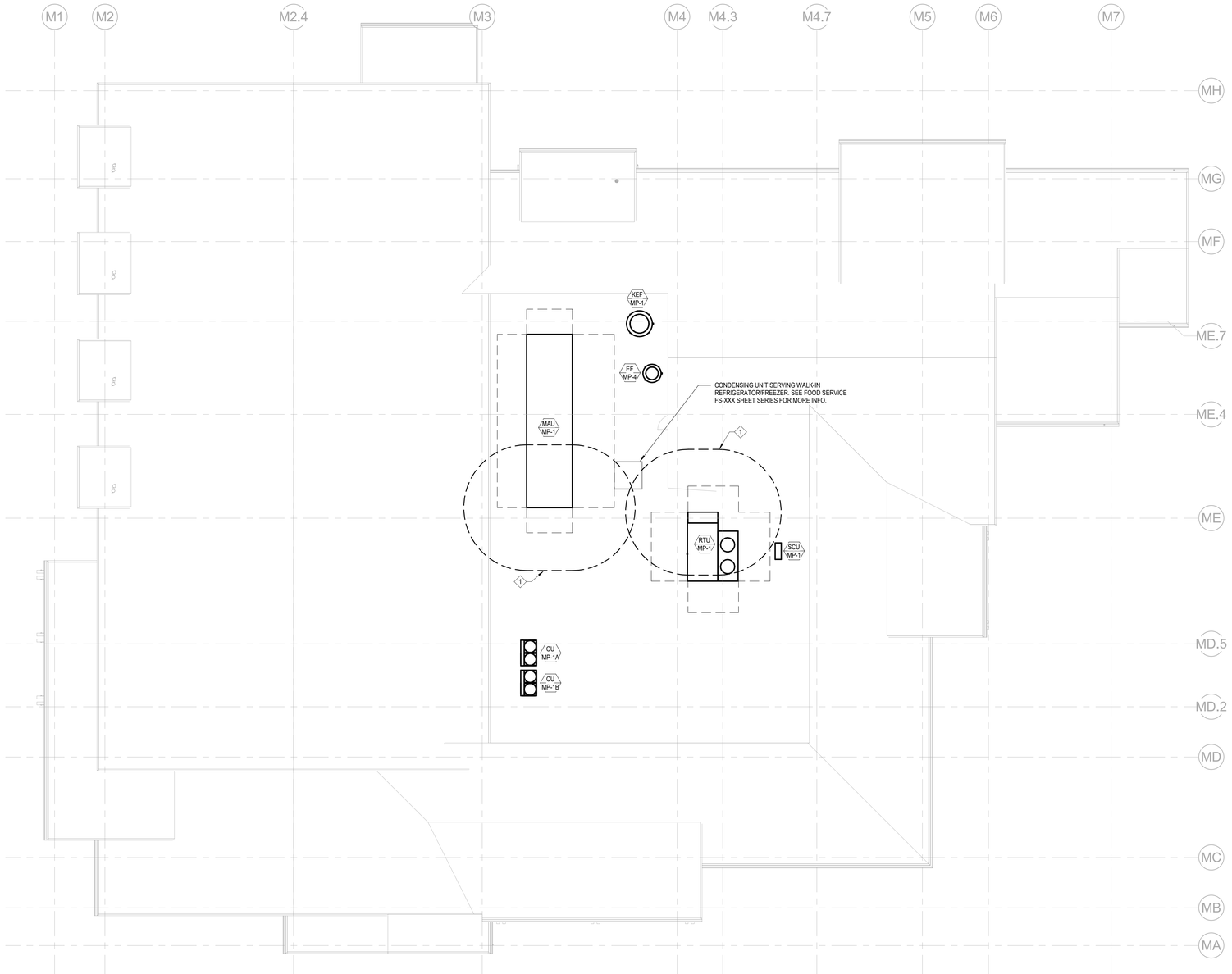

KEY NOTES:

1. MAINTAIN MINIMUM 10' CLEARANCE BETWEEN OUTSIDE AIR INTAKE AND ALL EXHAUST AIR DISCHARGES AND VENT PIPING THROUGH ROOF (VTRs).

1 M202M MULTI-PURPOSE BLDG HVAC ROOF PLAN

SCALE: 1/8" = 1'-0"

Plot Date: 3/19/2021 1:25:52 PM
File Name: J:\Revit Local Files\ECI_DGS CCC Willits_MP_MP18_Central_jduvall\KTH47.rvt

IDENTIFICATION STAMP
DIV. OF THE STATE ARCHITECT
APP: 02-118630 INC:
REVIEWED FOR
SS ☐ FLS ☐ ACS ☑
DATE: 04/13/2021

OFFICE OF THE STATE FIRE MARSHAL
APPROVED FIRE AND PANIC ONLY
Approval of this plan does not authorize or approve any omission or deviation from applicable regulations. Final approval is subject to field inspection. One set of approved plans shall be available on the project site at all times.
PERMIT NO. 20-N-2332-CP
REVIEWED BY: LEO CATAYLO, OSFM
DATE: 4 / /2021

DGS GENERAL SERVICES
Department of General Services
State of California
Real Estate Services Division
Project Management & Development Branch
707 Third Street, Suite 4-105
West Sacramento, California 95605

NICHOLS MELBURG & ROSSETTO
ARCHITECTS + ENGINEERS
300 Knollcrest Drive
Redding, CA. 96002
(530) 222-3300 (530) 222-3538 FAX
http://www.nmrdesign.com

Copyright © 2019
All ideas, designs, arrangements and plans indicated or represented by this drawing are owned by, and the property of, NICHOLS, MELBURG and ROSSETTO and were created, evolved and developed for use on, and in conjunction with, the specified project. None of such ideas, designs, arrangements or plans shall be used by, or disclosed to any person, firm or corporation for any purpose whatsoever without the written permission of NICHOLS, MELBURG and ROSSETTO

LICENSE STAMPS

REGISTERED PROFESSIONAL ENGINEER
KENT T. HOLLOWAY
M 33498
EXPIRES 9/30/22
MECHANICAL
STATE OF CALIFORNIA

DATE SIGNED: 10-20-20

CONSULTANT

CAPITAL
ENGINEERING CONSULTANTS, INC.
RANCHO CORDOVA, CALIFORNIA
JD - HCUH — PM - DESIGN TEAM
181205.00 — PROJECT NO.

DRAWING STATUS
CONSTRUCTION DOCUMENTS

ISSUE

No.	Date	Description
1	10/22/2020	INITIAL PLAN REVIEW
2	01/22/2021	AGENCY RESUBMITTAL
3	03/22/2021	AGENCY RESUBMITTAL

If drawing is not 30" x 42" it is a reduced print

PROJECT
RESIDENTIAL CENTER, UKIAH: REPLACEMENT OF EXISTING RESIDENTIAL CENTER
440 EAST HILL ROAD
WILLITS, CALIFORNIA 95490
MENDOCINO COUNTY
CALIFORNIA CONSERVATION CORP

Supervisor	Designed	Drawn
		Author

DSA Application No.
02-118630

SHEET TITLE
MULTI-PURPOSE BLDG HVAC ROOF PLAN

DGS Project Number: 0000000000001826
NMR Project Number: 18-6456

Reference North
Sheet Scale: 1/8" = 1'-0"
Sheet Number: M202M

ISSUE DATE
July 9, 2021

SHEET NOTES:

1. SEE 5/M400 FOR VRF REFRIGERANT PIPING DIAGRAM & SIZES.
2. SEE 9/M400 FOR AC-1 REFRIGERANT PIPING DIAGRAM & SIZES.
3. SEE SPLIT SYSTEM UNIT SCHEDULES ON M003 FOR REFRIGERANT PIPING BETWEEN SAC-1 & SCU-1.
4. INDIVIDUAL REFRIGERANT PIPES ARE NOT MODELED. RECTANGULAR SHAPES ON FLOOR PLAN INDICATE PIPE GROUPINGS WITH MULTIPLE REFRIGERANT PIPES ROUTED TOGETHER. SHOWN FOR SPACE COORDINATION AND NOT TO REPRESENT ANY PIPING ENCLOSURE.

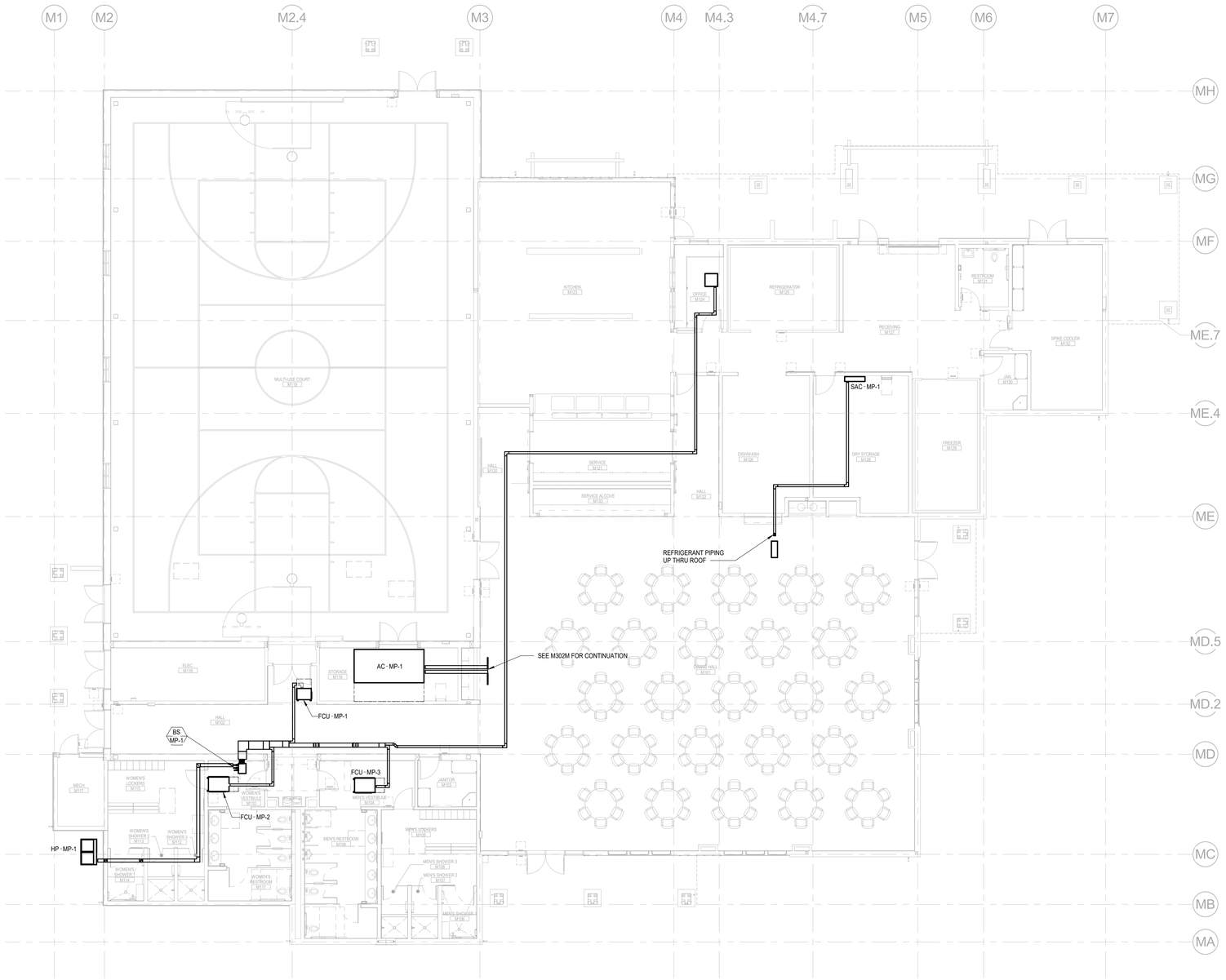

1 / M301M MULTI-PURPOSE BLDG HVAC PIPING FLOOR PLAN

SCALE: 1/8" = 1'-0"

Plot Date: 3/10/2021 1:25:56 PM
File Name: L:\Revit Local Files\DEC_DGS CCC Willits_MP_MP18_Central_jdovalKTH47.rvt

IDENTIFICATION STAMP
DIV. OF THE STATE ARCHITECT
APP: 02-118630 INC:
REVIEWED FOR
SS ☐ FLS ☐ ACS ☑
DATE: 04/13/2021

OFFICE OF THE STATE FIRE MARSHAL
APPROVED FIRE AND PANIC ONLY
Approval of this plan does not authorize or approve any omission or deviation from applicable regulations. Final approval is subject to field inspection. One set of approved plans shall be available on the project site at all times.
PERMIT NO. 20-N-2332-CP
REVIEWED BY: LEO CATAYLO, OSFM
DATE: 4 / /2021

GENERAL SERVICES
Department of General Services
State of California
Real Estate Services Division
Project Management & Development Branch
707 Third Street, Suite 4-105
West Sacramento, California 95605

NICHOLS MELBURG & ROSSETTO
ARCHITECTS + ENGINEERS
300 Knollcrest Drive
Redding, CA. 96002
(530) 222-3300 (530) 222-3538 FAX
http://www.nmrdesign.com

Copyright © 2019
All ideas, designs, arrangements and plans indicated or represented by this drawing are owned by, and the property of, NICHOLS, MELBURG and ROSSETTO and were created, evolved and developed for use on, and in conjunction with, the specified project. None of such ideas, designs, arrangements or plans shall be used by, or disclosed to any person, firm or corporation for any purpose whatsoever without the written permission of NICHOLS, MELBURG and ROSSETTO.

LICENSE STAMPS

REGISTERED PROFESSIONAL ENGINEER
M 33498
EXPIRES 9/30/22
MECHANICAL
STATE OF CALIFORNIA
DATE SIGNED: 10-20-20

CONSULTANT

CAPITAL
ENGINEERING CONSULTANTS, INC.
RANCHO CORDOVA, CALIFORNIA
JD - HCUH — PM - DESIGN TEAM
181205.00 — PROJECT NO.

DRAWING STATUS
CONSTRUCTION DOCUMENTS

ISSUE

No.	Date	Description
1	10/22/2020	INITIAL PLAN REVIEW
2	01/22/2021	AGENCY RESUBMITTAL
3	03/22/2021	AGENCY RESUBMITTAL

If drawing is not 30" x 42" it is a reduced print

PROJECT
RESIDENTIAL CENTER, UKIAH: REPLACEMENT OF EXISTING RESIDENTIAL CENTER
440 EAST HILL ROAD
WILLITS, CALIFORNIA 95490
MENDOCINO COUNTY
CALIFORNIA CONSERVATION CORP

Supervisor	Designed	Drawn
		Author

DSA Application No.
02-118630

SHEET TITLE
MULTI-PURPOSE BLDG HVAC PIPING FLOOR PLAN

DGS Project Number: 0000000000001826
NMR Project Number: 18-6456

Reference North
Sheet Scale: 1/8" = 1'-0"
Sheet Number: M301M

ISSUE DATE
July 9, 2021

SHEET NOTES:

1. SEE 5/M400 FOR VRF REFRIGERANT PIPING DIAGRAM & SIZES.
2. SEE 9/M400 FOR AC-1 REFRIGERANT PIPING DIAGRAM & SIZES.
3. SEE SPLIT SYSTEM UNIT SCHEDULES ON M003 FOR REFRIGERANT PIPING BETWEEN SAC-1 & SCU-1.
4. INDIVIDUAL REFRIGERANT PIPES ARE NOT MODELED. RECTANGULAR SHAPES ON ROOF PLAN INDICATE PIPE GROUPINGS WITH MULTIPLE REFRIGERANT PIPES ROUTED TOGETHER. SHOWN FOR SPACE COORDINATION AND NOT TO REPRESENT ANY PIPING ENCLOSURE.

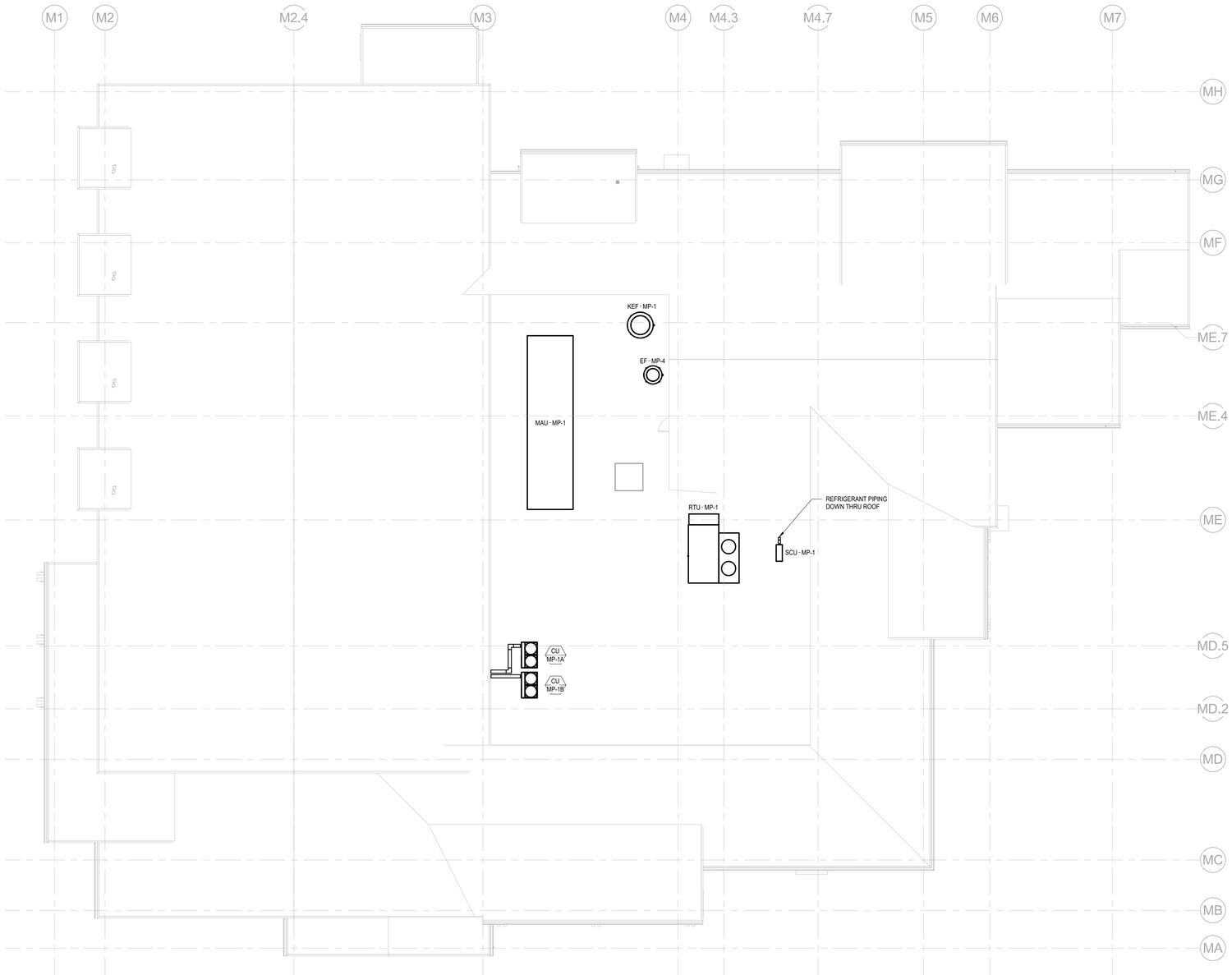

1 M302M MULTI-PURPOSE BLDG HVAC PIPING ROOF PLAN

SCALE: 1/8" = 1'-0"

IDENTIFICATION STAMP
DIV. OF THE STATE ARCHITECT
APP: 02-118630 INC:
REVIEWED FOR
SS ☐ FLS ☐ ACS ☑
DATE: 04/13/2021

OFFICE OF THE STATE FIRE MARSHAL
APPROVED FIRE AND PANIC ONLY
Approval of this plan does not authorize or approve any omission or deviation from applicable regulations. Final approval is subject to field inspection. One set of approved plans shall be available on the project site at all times.
PERMIT NO. 20-N-2332-CP
REVIEWED BY: LEO CATAYLO, OSFM
DATE: 4 / /2021

GENERAL SERVICES
Department of General Services
State of California
Real Estate Services Division
Project Management & Development Branch
707 Third Street, Suite 4-105
West Sacramento, California 95605

NICHOLS MELBURG & ROSSETTO
ARCHITECTS + ENGINEERS
300 Knollcrest Drive
Redding, CA. 96002
(530) 222-3300 (530) 222-3538 FAX
http://www.nmrdesign.com

Copyright © 2019
All ideas, designs, arrangements and plans indicated or represented by this drawing are owned by, and the property of, NICHOLS, MELBURG and ROSSETTO and were created, evolved and developed for use on, and in conjunction with, the specified project. None of such ideas, designs, arrangements or plans shall be used by, or disclosed to any person, firm or corporation for any purpose whatsoever without the written permission of NICHOLS, MELBURG and ROSSETTO.

LICENSE STAMPS

REGISTERED PROFESSIONAL ENGINEER
M 33498
EXPIRES 9/30/22
MECHANICAL
STATE OF CALIFORNIA
DATE SIGNED: 10-20-20

CONSULTANT

CAPITAL
ENGINEERING CONSULTANTS, INC.
RANCHO CORDOVA, CALIFORNIA
JD - HC/JH — PM - DESIGN TEAM
181205.00 — PROJECT NO.

DRAWING STATUS
CONSTRUCTION DOCUMENTS

ISSUE

No.	Date	Description
1	10/22/2020	INITIAL PLAN REVIEW
2	01/22/2021	AGENCY RESUBMITTAL
3	03/22/2021	AGENCY RESUBMITTAL

If drawing is not 30" x 42" it is a reduced print

PROJECT
RESIDENTIAL CENTER, UKIAH: REPLACEMENT OF EXISTING RESIDENTIAL CENTER
440 EAST HILL ROAD
WILLITS, CALIFORNIA 95490
MENDOCINO COUNTY
CALIFORNIA CONSERVATION CORP

Supervisor	Designed	Drawn
		Author

DSA Application No.
02-118630

SHEET TITLE
MULTI-PURPOSE BLDG HVAC PIPING ROOF PLAN

DGS Project Number: 0000000000001826
NMR Project Number: 18-6456

Reference North
Sheet Scale: 1/8" = 1'-0"
Sheet Number: M302M

ISSUE DATE
July 9, 2021

Plot Date: 3/18/2021 1:26:02 PM
File Name: L:\Revit Local Files\DEC_DGS CCC Willits_MP_MP18_Central_jdovak\KTH47.rvt

STATE OF CALIFORNIA
Mechanical Systems
NRCC-MCH-E — CALIFORNIA ENERGY COMMISSION

CERTIFICATE OF COMPLIANCE			NRCC-MCH-E
This document is used to demonstrate compliance for mechanical systems that are within the scope of the permit application and are demonstrating compliance using the prescriptive path outlined in §140.4, or §141.0(b)2 for alterations .			
Project Name:	CCC Willits - Multi-Purpose Building	Report Page:	(Page 1 of 13)
Project Address:		Date Prepared:	9/23/2020

A. GENERAL INFORMATION

01	Project Location (city)	Willits	04	Total Conditioned Floor Area	14208
02	Climate Zone	2	05	Total Unconditioned Floor Area	291
03	Occupancy Types Within Project:		06	# of Stories (Habitable Above Grade)	1
☒ Office (B)		☐ Retail (M)	☐ Non-refrigerated Warehouse (S)		
☐ Hotel/ Motel Guest Rooms (R-1)		☐ School (E)	☐ Healthcare Facility (H)		
☐ High-Rise Residential (R-2/R-3)		☐ Relocatable Class Bldg (E)	☒ Other (write in)		See Table J

B. PROJECT SCOPE
This table Includes mechanical systems or components that are within the scope of the permit application and are demonstrating compliance using the prescriptive path outlined in §140.4, or §141.0(b)2 for alterations .

01	02	03
Air System(s)	Wet System Components	Dry System Components
☒ Heating Air System	☐ Water Economizer	☒ Air Economizer
☒ Cooling Air System	☐ Pumps	☐ Electric Resistance Heat
Mechanical Controls	☐ System Piping	☒ Fan Systems
☒ Mechanical Controls	☐ Cooling Towers	☐ Ductwork
	☐ Chillers	☒ Ventilation
	☐ Boilers	☐ Zonal Systems/ Terminal Boxes

Registration Number: — Registration Date/Time: — Registration Provider: Energysoft
CA Building Energy Efficiency Standards - 2019 Nonresidential Compliance — Report Version: 2019.0.001 Schema Version: rev 20190401 — Report Generated: 2020-09-23 10:53:45

STATE OF CALIFORNIA
Mechanical Systems
NRCC-MCH-E — CALIFORNIA ENERGY COMMISSION

CERTIFICATE OF COMPLIANCE			NRCC-MCH-E
Project Name:	CCC Willits - Multi-Purpose Building	Report Page:	(Page 2 of 13)
Project Address:		Date Prepared:	9/23/2020

C. COMPLIANCE RESULTS
Table C will indicate if the project data input into the compliance document is compliant with mechanical requirements. This table is not editable by the user. If this table says "DOES NOT COMPLY" or "COMPLIES with Exceptional Conditions" refer to Table D., or the table indicated as not compliant for guidance.

01		02		03		04		05		06		07		08	09
System Summary §110.1, §110.2, §140.4	AND	Pumps §140.4(k)	AND	Fans/ Economizers §140.4(c), §140.4(e)	AND	System Controls §110.2, §120.2, §140.4(f)	AND	Ventilation §120.1	AND	Terminal Box Controls §140.4(d)	AND	Distribution §120.3, §140.4(l)	AND	Cooling Towers §110.2(e)2	Compliance Results
(See Table F)		(See Table G)		(See Table H)		(See Table I)		(See Table J)		(See Table K)		(See Table L)		(See Table M)	
Yes	AND		AND	Yes	AND	Yes	AND	Yes	AND		AND		AND		COMPLIES
Mandatory Measures Compliance (See Table Q for Details)										COMPLIES					

D. EXCEPTIONAL CONDITIONS
This table is auto-filled with uneditable comments because of selections made or data entered in tables throughout the form.

E. ADDITIONAL REMARKS
This table includes remarks made by the permit applicant to the Authority Having Jurisdiction.

Registration Number: — Registration Date/Time: — Registration Provider: Energysoft
CA Building Energy Efficiency Standards - 2019 Nonresidential Compliance — Report Version: 2019.0.001 Schema Version: rev 20190401 — Report Generated: 2020-09-23 10:53:45

STATE OF CALIFORNIA
Mechanical Systems
NRCC-MCH-E — CALIFORNIA ENERGY COMMISSION

CERTIFICATE OF COMPLIANCE			NRCC-MCH-E
Project Name:	CCC Willits - Multi-Purpose Building	Report Page:	(Page 3 of 13)
Project Address:		Date Prepared:	9/23/2020

F. HVAC SYSTEM SUMMARY (DRY & WET SYSTEMS)
This table is used to demonstrate compliance for mechanical equipment with mandatory requirements found in §110.1 and §110.2(a) and prescriptive requirements found in §140.4(a), §140.4(b) and §140.4(k) or §141.0(b)2 for alterations.

Dry System Equipment Sizing (includes air conditioners, condensers, heat pumps, VRF, furnaces and unit heaters)

01	02	03	04	05	06	07	08	09	10	11
				Equipment Sizing per Mechanical Schedule (Btu/h) §140.4 (a&b)						
				Heating Output[2,3]			Cooling Output[2,3]		Load Calculations[3,4]	
Name or Item Tag	Equipment Category per Tables 110.2	Equipment Type per Tables 110.2 & Title 20	Smallest Size Available[1] §140.4(a)	Per Design (kBtu/h)	Rated (kBtu/h)	Supp. Heating Output (kBtu/h)	Sensible Per Design (kBtu/h)	Rated (kBtu/h)	Total Heating Load	Total Sensible Cooling Load
AC-MP-1	Unitary Heat Pumps	Air-cooled, pkg (3 phase)	Yes	91716	186000	0	90605	67225	223843	146872
AC-MP-2	Unitary Heat Pumps	Air-cooled, pkg (3 phase)	Yes	39635	80380	0	78828	81528	174369	168195
HP-MP-1	Variable Refrigerant Flow	VRF heat pump, air cooled	Yes	59148	74327	0	63207	68057	25963	30663
MAU-MP-1	Unitary Heat Pumps	Air-cooled, pkg (3 phase)	Yes	332477	397400	136520	446338	394100	639769	254008

[1]*FOOTNOTES: Equipment shall be the smallest size, within the available options of the desired equipment line, necessary to meet the design heating and cooling loads of the building per §140.4(a). Healthcare facilities are excepted.*
[2]*It is common practice to show rated output capacity on the equipment schedule. Sensible cooling output comes from specification sheet tables.*
[3] *If equipment is heating only, leave cooling output and load blank. If equipment is cooling only, leave heating output and load blank.*
[4] *Authority Having Jurisdiction may ask for load calculations used for compliance per §140.4(b).*

Registration Number: — Registration Date/Time: — Registration Provider: Energysoft
CA Building Energy Efficiency Standards - 2019 Nonresidential Compliance — Report Version: 2019.0.001 Schema Version: rev 20190401 — Report Generated: 2020-09-23 10:53:45

STATE OF CALIFORNIA
Mechanical Systems
NRCC-MCH-E — CALIFORNIA ENERGY COMMISSION

CERTIFICATE OF COMPLIANCE			NRCC-MCH-E
Project Name:	CCC Willits - Multi-Purpose Building	Report Page:	(Page 4 of 13)
Project Address:		Date Prepared:	9/23/2020

F. HVAC SYSTEM SUMMARY (DRY & WET SYSTEMS)
Dry System Equipment Efficiency (other than Package Terminal Air Conditioners (PTAC) and Package Terminal Heat Pumps (PTHP))

01	02	03	04	05	06	07	08	09
		Heating Mode				Cooling Mode		
Name or Item Tag	Size Category (Btu/h)	Rating Condition (°F)	Efficiency Unit	Minimum Efficiency Required per Tables 110.2 / Title 20	Design Efficiency	Efficiency Unit	Minimum Efficiency Required per Tables 110.2 / Title 20	Design Efficiency
AC-MP-1	65,000 and 135,000		COP	3.3	4.4	EER IEER	11 12.2	15.1 24
AC-MP-2	65,000 and 135,000		COP	3.3	3.62	EER IEER	11 12.2	12.8 19.3
HP-MP-1	65,000 and 135,000	47 Fdb/ 43 Fwb OSA	COP	3.3	3.7	EER IEER	11.0 14.6	13.9 21.3
MAU-MP-1	240,000		COP	3.2	4.2	EER IEER	9.5 10.6	12 18

G. PUMPS
This section does not apply to this project.

Registration Number: — Registration Date/Time: — Registration Provider: Energysoft
CA Building Energy Efficiency Standards - 2019 Nonresidential Compliance — Report Version: 2019.0.001 Schema Version: rev 20190401 — Report Generated: 2020-09-23 10:53:45

STATE OF CALIFORNIA
Mechanical Systems
NRCC-MCH-E — CALIFORNIA ENERGY COMMISSION

CERTIFICATE OF COMPLIANCE			NRCC-MCH-E
Project Name:	CCC Willits - Multi-Purpose Building	Report Page:	(Page 5 of 13)
Project Address:		Date Prepared:	9/23/2020

H. FAN SYSTEMS & AIR ECONOMIZERS
This table is used to demonstrate compliance with prescriptive requirements found in §140.4(c), §140.4(e) and §140.4(m) for fan systems. Fan systems serving healthcare facilities, or those serving only process loads, are exempt from these requirements and do not need to be included in Table H.

System Name:	AC-MP-1	Economizer:[1]	Differential Temperature	Economizer Controls:	Designed per and (m)	System Fan Type:	Fixed Flow
01	02	03	04	05	06	07	08
						Fan Power Pressure Drop Adjustment - Table 140.4-B	
Fan Name or Item Tag	Fan Function	Qty	Maximum Design Supply Airflow (CFM)	HP Unit[2]	Design HP	Device	Design Airflow through Device (CFM)
SF	Supply	1	3500	BHP	3.31		
RF	Return	1	0	BHP	2.17		
Total System Design Supply Airflow (CFM):			3500	Total System Design (B)HP:	5.48	Maximum System Fan Power (B)HP:	3.29
System Name:	AC-MP-2	Economizer:[1]	Differential Temperature	Economizer Controls:	Designed per and (m)	System Fan Type:	Fixed Flow
01	02	03	04	05	06	07	08
						Fan Power Pressure Drop Adjustment - Table 140.4-B	
Fan Name or Item Tag	Fan Function	Qty	Maximum Design Supply Airflow (CFM)	HP Unit[2]	Design HP	Device	Design Airflow through Device (CFM)
SF	Supply	1	2500	BHP	1.27		
RF	Return	1	0	BHP	0.2		
Total System Design Supply Airflow (CFM):			2500	Total System Design (B)HP:	1.47	Maximum System Fan Power (B)HP:	2.35

Registration Number: — Registration Date/Time: — Registration Provider: Energysoft
CA Building Energy Efficiency Standards - 2019 Nonresidential Compliance — Report Version: 2019.0.001 Schema Version: rev 20190401 — Report Generated: 2020-09-23 10:53:45

STATE OF CALIFORNIA
Mechanical Systems
NRCC-MCH-E — CALIFORNIA ENERGY COMMISSION

CERTIFICATE OF COMPLIANCE			NRCC-MCH-E
Project Name:	CCC Willits - Multi-Purpose Building	Report Page:	(Page 6 of 13)
Project Address:		Date Prepared:	9/23/2020

H. FAN SYSTEMS & AIR ECONOMIZERS

System Name:	HP-MP-1	Economizer:[1]	Differential Temperature	Economizer Controls:	Designed per and (m)	System Fan Type:	Fixed Flow
01	02	03	04	05	06	07	08
						Fan Power Pressure Drop Adjustment - Table 140.4-B	
Fan Name or Item Tag	Fan Function	Qty	Maximum Design Supply Airflow (CFM)	HP Unit[2]	Design HP	Device	Design Airflow through Device (CFM)
VRF	Other (Transfer, VAV box)	1	5075	BHP	0.01		
VRF	Other (Transfer, VAV box)	1	0	BHP	0.02		
EF	Exhaust	1	0	BHP	0		
VRF	Other (Transfer, VAV box)	1	0	BHP	0.02		
EF	Exhaust	1	0	BHP	0		
VRF	Other (Transfer, VAV box)	1	0	BHP	0.02		
Total System Design Supply Airflow (CFM):			5075	Total System Design (B)HP:	0.08	Maximum System Fan Power (B)HP:	2.35
System Name:	MAU-MP-1	Economizer:[1]	Differential Temperature	Economizer Controls:	Designed per and (m)	System Fan Type:	Fixed Flow
01	02	03	04	05	06	07	08
						Fan Power Pressure Drop Adjustment - Table 140.4-B	
Fan Name or Item Tag	Fan Function	Qty	Maximum Design Supply Airflow (CFM)	HP Unit[2]	Design HP	Device	Design Airflow through Device (CFM)
SF	Supply	1	8000	BHP	6.62		
RF	Return	1	0	BHP	3.59		
EF	Exhaust	1	0	BHP	2.87		
Total System Design Supply Airflow (CFM):			8000	Total System Design (B)HP:	13.08	Maximum System Fan Power (B)HP:	7.52

[1] *FOOTNOTES: Computer room economizers must meet requirements of §140.9(a) and will be documented on the NRCC-PRC-E document.*
[2] *If total filter pressure drop (SPa) is greater than 1 in WC, or 245 Pascal then enter it and total fan pressure drop across the fan (SPf) for system.*

Registration Number: — Registration Date/Time: — Registration Provider: Energysoft
CA Building Energy Efficiency Standards - 2019 Nonresidential Compliance — Report Version: 2019.0.001 Schema Version: rev 20190401 — Report Generated: 2020-09-23 10:53:45

STATE OF CALIFORNIA
Mechanical Systems
NRCC-MCH-E — CALIFORNIA ENERGY COMMISSION

CERTIFICATE OF COMPLIANCE			NRCC-MCH-E
Project Name:	CCC Willits - Multi-Purpose Building	Report Page:	(Page 7 of 13)
Project Address:		Date Prepared:	9/23/2020

I. SYSTEM CONTROLS
This table is used to demonstrate compliance with mandatory controls in §110.2 and §120.2 and prescriptive controls in §140.4(f) and (n) or requirements in §141.0(b)2E for altered space conditioning systems.

01	02	03	04	05	06	07	08	09
System Name	System Zoning	Conditioned Floor Area Being Served (ft^2)	Thermostats §110.2(b) & (c)[1], §120.2(a)or §141.0(b)2E	Shut-Off Controls §120.2(e)	Isolation Zone Controls §120.2(g)	Demand Response §120.2(b)	Supply Air Temp. Reset §140.4(f)	Window Interlocks per §140.4(n)
AC-MP-1	Single zone	<= 25,000 ft^2	Setback	Auto Timer Switch	4 Hour Timer	EMCS	Included	Provided
AC-MP-2	Single zone	<= 25,000 ft^2	Setback	Auto Timer Switch	4 Hour Timer	EMCS	Included	Provided
HP-MP-1	Multi-zone w/ DDC to zone	<= 25,000 ft^2	Setback	Auto Timer Switch	4 Hour Timer	EMCS	Included	Provided
MAU-MP-1	Single zone	<= 25,000 ft^2	Setback	Auto Timer Switch	4 Hour Timer	EMCS	Included	Provided

[1]*FOOTNOTES: Gravity gas wall heaters, gravity floor heaters, gravity room heaters, non-central electric heaters, fireplaces or decorative gas appliances, wood stoves are not required to have setback thermostats.*
*Notes: Controls with a * require a note in the space below explaining how compliance is achieved. EX: system 1: SA Temp Reset: Exempt because zones compliant with §140.4(d) ; EXCEPTION 1 to §140.4(f)

J. VENTILATION AND INDOOR AIR QUALITY
This table is used to demonstrate compliance with mandatory ventilation requirements in §120.1 and §120.2(e)3B for all nonresidential, high-rise residential and hotel/motel occupancies. For alterations, only ventialtion systems being altered within the scope of the permit application need to be documented in this table. In lieu of this table, the required outdoor ventilation rates and airflows may be shown on the plans or the calculations can be presented in a spreadsheet.

01	☐	Check the box if the project is showing ventilation calculations on the plans, or attaching the calculations instead of completing this table.
02	☐	Check this box if the project included new or altered high-rise residential dwelling units.
03	☐	Check the box if the project is using natural ventilation in any nonresidential or hotel/motel spaces to meet required ventilation rates per §120.1(c)2.

Nonresidential and Hotel/ Motel Ventilation Systems

Registration Number: — Registration Date/Time: — Registration Provider: Energysoft
CA Building Energy Efficiency Standards - 2019 Nonresidential Compliance — Report Version: 2019.0.001 Schema Version: rev 20190401 — Report Generated: 2020-09-23 10:53:45

STATE OF CALIFORNIA
Mechanical Systems
NRCC-MCH-E — CALIFORNIA ENERGY COMMISSION

CERTIFICATE OF COMPLIANCE			NRCC-MCH-E
Project Name:	CCC Willits - Multi-Purpose Building	Report Page:	(Page 8 of 13)
Project Address:		Date Prepared:	9/23/2020

J. VENTILATION AND INDOOR AIR QUALITY

04		05		06		07
System Name	AC-MP-1	System Design OA CFM Airflow[1]	2528	System Design Transfer Air CFM	0	Air Filtration per §120.1(c) and §141.0(b)2 [2]; Provided per §120.1(c) (NR and Hotel/Motel))

08	09	10	11	12	13	14	15	16	
	Mechanical Ventilation Required per §120.1(c)3 [3]					Exh. Vent per §120.1(c)4			
Space Name ot item Tag	Occupancy Type[4]	Conditioned Floor Area (ft^2)	# of Shower heads/ toilets	# of people[5]	Required Min OA CFM	Required Min CFM	Provided per Design CFM	DCV or Sensor Controls per §120.1(d)3, §120.1(d)5, and §120.1(e)3 [6]	
AC-MP-1	All others	5056			2528	0	0	DCV	NA: Not required per §120.1(d)3
								Occ Sensor	

04		05		06		07
System Name	AC-MP-2	System Design OA CFM Airflow[1]	2200	System Design Transfer Air CFM	0	Air Filtration per §120.1(c) and §141.0(b)2 [2]; Provided per §120.1(c) (NR and Hotel/Motel))

08	09	10	11	12	13	14	15	16	
	Mechanical Ventilation Required per §120.1(c)3 [3]					Exh. Vent per §120.1(c)4			
Space Name ot item Tag	Occupancy Type[4]	Conditioned Floor Area (ft^2)	# of Shower heads/ toilets	# of people[5]	Required Min OA CFM	Required Min CFM	Provided per Design CFM	DCV or Sensor Controls per §120.1(d)3, §120.1(d)5, and §120.1(e)3 [6]	
AC-MP-2	Dining Area	4400			2200	0	0	DCV	Provided per §120.1(d)4
								Occ Sensor	

04		05		06		07
System Name	HP-MP-1	System Design OA CFM Airflow[1]	141.15	System Design Transfer Air CFM	0	Air Filtration per §120.1(c) and §141.0(b)2 [2]; Provided per §120.1(c) (NR and Hotel/Motel))
08	09	10	11	12	13	14	15	16

Registration Number: — Registration Date/Time: — Registration Provider: Energysoft
CA Building Energy Efficiency Standards - 2019 Nonresidential Compliance — Report Version: 2019.0.001 Schema Version: rev 20190401 — Report Generated: 2020-09-23 10:53:45

STATE OF CALIFORNIA
Mechanical Systems
NRCC-MCH-E — CALIFORNIA ENERGY COMMISSION

CERTIFICATE OF COMPLIANCE			NRCC-MCH-E
Project Name:	CCC Willits - Multi-Purpose Building	Report Page:	(Page 9 of 13)
Project Address:		Date Prepared:	9/23/2020

J. VENTILATION AND INDOOR AIR QUALITY

Space Name ot item Tag	Occupancy Type[4]	Conditioned Floor Area (ft^2)	# of Shower heads/ toilets	# of people[5]	Required Min OA CFM	Required Min CFM	Provided per Design CFM	DCV or Sensor Controls per §120.1(d)3, §120.1(d)5, and §120.1(e)3 [6]	
	Mechanical Ventilation Required per §120.1(c)3 [3]					Exh. Vent per §120.1(c)4			
FCU-MP-1	Corridor Transition	835			125.2	0	0	DCV	NA: Not required per §120.1(d)3
								Occ Sensor	
FCU-MP-2	Locker room (all others)	592			0	148	525	DCV	NA: Not required per §120.1(d)3
								Occ Sensor	
FCU-MP-3	Locker room (all others)	646			0	161.5	700	DCV	NA: Not required per §120.1(d)3
								Occ Sensor	
FCU-MP-4	Office space	106			15.9	0	0	DCV	NA: Not required per §120.1(d)3
								Occ Sensor	

04		05		06		07
System Name	MAU-MP-1	System Design OA CFM Airflow[1]	385.95	System Design Transfer Air CFM	0	Air Filtration per §120.1(c) and §141.0(b)2 [2]; Provided per §120.1(c) (NR and Hotel/Motel))

08	09	10	11	12	13	14	15	16	
	Mechanical Ventilation Required per §120.1(c)3 [3]					Exh. Vent per §120.1(c)4			
Space Name ot item Tag	Occupancy Type[4]	Conditioned Floor Area (ft^2)	# of Shower heads/ toilets	# of people[5]	Required Min OA CFM	Required Min CFM	Provided per Design CFM	DCV or Sensor Controls per §120.1(d)3, §120.1(d)5, and §120.1(e)3 [6]	
MAU-MP-1	All others	2573			385.9	1801.1	8190	DCV	NA: Not required per §120.1(d)3
								Occ Sensor	

[1] *FOOTNOTES: System CFM should include both mechanical and natural ventilation for the zone/system*

Registration Number: — Registration Date/Time: — Registration Provider: Energysoft
CA Building Energy Efficiency Standards - 2019 Nonresidential Compliance — Report Version: 2019.0.001 Schema Version: rev 20190401 — Report Generated: 2020-09-23 10:53:45

IDENTIFICATION STAMP
DIV. OF THE STATE ARCHITECT
APP: 02-118630 INC:
REVIEWED FOR
SS ☐ FLS ☐ ACS ☑
DATE: 04/13/2021

OFFICE OF THE STATE FIRE MARSHAL
APPROVED FIRE AND PANIC ONLY
Approval of this plan does not authorize or approve any omission or deviation from applicable regulations. Final approval is subject to field inspection. One set of approved plans shall be available on the project site at all times.
PERMIT NO. 20-N-2332-CP
REVIEWED BY: LITO CATAYLO, OSFM
DATE: 4/ 1 /2021

GENERAL SERVICES
Department of General Services
State of California
Real Estate Services Division
Project Management & Development Branch
707 Third Street, Suite 4-105
West Sacramento, California 95605

NICHOLS MELBURG & ROSSETTO
ARCHITECTS + ENGINEERS
300 Knollcrest Drive
Redding, CA. 96002
(530) 222-3300 (530) 222-3538 FAX
http://www.nmrdesign.com

Copyright © 2019
All ideas, designs, arrangements and plans indicated or represented by this drawing are owned by, and the property of, NICHOLS, MELBURG and ROSSETTO and were created, evolved and developed for use on, and in conjunction with, the specified project. None of such ideas, designs, arrangements or plans shall be used by, or disclosed to any person, firm or corporation for any purpose whatsoever without the written permission of NICHOLS, MELBURG and ROSSETTO.

LICENSE STAMPS
REGISTERED PROFESSIONAL ENGINEER — M 33498 — EXPIRES 9/30/22 — MECHANICAL — STATE OF CALIFORNIA
DATE SIGNED: 10-20-20

CONSULTANT
CAPITAL ENGINEERING CONSULTANTS, INC.
RANCHO CORDOVA, CALIFORNIA
JD - HC/JH — PM - DESIGN TEAM
181205.00 — PROJECT NO.

DRAWING STATUS
CONSTRUCTION DOCUMENTS

ISSUE

No.	Date	Description
1	10/22/2020	INITIAL PLAN REVIEW
2	01/22/2021	AGENCY RESUBMITTAL
3	03/22/2021	AGENCY RESUBMITTAL

If drawing is not 30" x 42" it is a reduced print

PROJECT
RESIDENTIAL CENTER, UKIAH: REPLACEMENT OF EXISTING RESIDENTIAL CENTER
440 EAST HILL ROAD
WILLITS, CALIFORNIA 95490
MENDOCINO COUNTY
CALIFORNIA CONSERVATION CORP

Supervisor — Designed — Drawn: Author

DSA Application No. 02-118630

SHEET TITLE
MULTI-PURPOSE BLDG TITLE 24 COMPLIANCE

DGS Project Number 000000000001826 — NMR Project Number 18-6456

Sheet Scale

Sheet Number **M401M**

ISSUE DATE July 9, 2021

Plot Date: 3/19/2021 1:26:03 PM
File Name: L:\Revit Local Files\CECI_DGS CCC Willits_MP_MP18_Central_jduvalKTH47.rvt

STATE OF CALIFORNIA
Mechanical Systems
NRCC-MCH-E — CALIFORNIA ENERGY COMMISSION

CERTIFICATE OF COMPLIANCE		NRCC-MCH-E
Project Name:	CCC Willits - Multi-Purpose Building	Report Page: (Page 10 of 13)
Project Address:		Date Prepared: 9/23/2020

J. VENTILATION AND INDOOR AIR QUALITY

[2] *Air filtration requirements apply to the following three system types per §120.1(c)1A : space conditioning systems utilizing ducts to supply air to occupiable space; supply-only ventilation systems providing outside air to occupiable space; supply side of balanced ventilation systems including heat recovery and energy recovery ventilation systems providing outside air to occupiable space.*

[3] *Uniform Mechanical Code may have more stringent ventilation requirements; the most stringent code requirement takes precedence.*

[4] *See Standards Tables 120.1-A and 120.1-B.*

[5] *For lecture halls with fixed seating, the expected number of occupants shall be shall be determined in accordance with the California Building Code.*

[6] *§120.2(e)3 requires systems serving rooms that are required by §130.1(c) to have lighting occupancy sensing controls to also have occupancy sensing zone controls for ventilation. Examples of spaces which require lighting occupancy sensors include offices 250ft² or smaller, multipurpose rooms less than 1,000 ft², classrooms, conference rooms, restrooms, aisles and open areas in warehouses, library book stack aisles, corridors, stairwells, parking garages, and loading and unloading zones, unless excepted by §130.1(c).*

K. TERMINAL BOX CONTROLS

This section does not apply to this project.

L. DISTRIBUTION (DUCTWORK and PIPING)

This section does not apply to this project.

M. COOLING TOWERS

This section does not apply to this project.

N. DECLARATION OF REQUIRED CERTIFICATES OF INSTALLATION

Selections have been made based on information provided in previous tables of this document. If any selection needs to be changed, please explain why in Table E Additional Remarks. These documents must be provided to the building inspector during construction and can be found online at https://www.energy.ca.gov/title24/2019standards/2019_compliance_documents/Nonresidential_Documents/NRCI/

Yes	No	Form/Title	Field Inspector Pass	Field Inspector Fail
●	○	NRCI-MCH-01-E - Must be submitted for all buildings	☐	☐

Registration Number: — Registration Date/Time: — Registration Provider: Energysoft

CA Building Energy Efficiency Standards - 2019 Nonresidential Compliance — Report Version: 2019.0.001 Schema Version: rev 20190401 — Report Generated: 2020-09-23 10:53:45

STATE OF CALIFORNIA
Mechanical Systems
NRCC-MCH-E — CALIFORNIA ENERGY COMMISSION

CERTIFICATE OF COMPLIANCE		NRCC-MCH-E
Project Name:	CCC Willits - Multi-Purpose Building	Report Page: (Page 11 of 13)
Project Address:		Date Prepared: 9/23/2020

O. DECLARATION OF REQUIRED CERTIFICATES OF ACCEPTANCE

Selections have been made based on information provided in previous tables of this document. If any selection needs to be changed, please explain why in Table E Additional Remarks. These documents must be provided to the building inspector during construction and can be found online at https://www.energy.ca.gov/title24/2019standards/2019_compliance_documents/Nonresidential_Documents/NRCA/

Yes	No	Form/Title	Field Inspector Pass	Field Inspector Fail
●	○	NRCA-MCH-02-A - Outdoor Air must be submitted for all newly installed HVAC units. Note: MCH-02-A can be performed in conjunction with MCH-07-A Supply Fan VFD Acceptance (if applicable) since testing activities overlap.	☐	☐
○	●	NRCA-MCH-03-A - Constant Volume Single Zone HVAC NOTE: This form does not automatically move to "Yes". If Constant Volume Single Zone HVAC Systems are included in the scope, permit applicant should move this form to "Yes".	☐	☐
○	●	NRCA-MCH-04-A - Air Distribution Duct Leakage	☐	☐
●	○	NRCA-MCH-05-A - Air Economizer Controls	☐	☐
●	○	NRCA-MCH-06-A Demand Control Ventilation Systems must be susmitted for all systems required to employ demand controlled ventilation (refer to §120.1(c)3) can vary outside ventilation flow rates based on maintaining interior carbon dioxide (CO_2) concentration setpoints.	☐	☐
●	○	NRCA-MCH-07-A Supply Fan Variable Flow Controls	☐	☐
○	●	NRCA-MCH-08-A Valve Leakage Test	☐	☐
○	●	NRCA-MCH-09-A Supply Water Temperature Reset Controls	☐	☐
○	●	NRCA-MCH-10-A Hydronic System Variable Flow Controls	☐	☐
●	○	NRCA-MCH-11-A Automatic Demand Shed Controls	☐	☐
●	○	NRCA-MCH-12-A FDD for Packaged Direct Expansion Units	☐	☐
○	●	NRCA-MCH-13-A Automatic FDD for Air Handling Units and Zone Terminal Units Acceptance	☐	☐
○	●	NRCA-MCH-14-A Distributed Energy Storage DX AC Systems Acceptance NOTE: This form does not automatically move :o "Yes". If Distributed Energy System DX AC Systems are included in teh scope permit applicant should move this form to 'Yes".	☐	☐
○	●	NRCA-MCH-15-A Thermal Energy Storage (TES) System Acceptance NOTE: This form does not automatically move to "Yes". If Chilled water Storage, Ice-on-Coil Internal Melt, Ice-on-Coil External melt, Ice Harvester, Brine, Ice-Slurry, Eutecti Salt, Clathrate Hydrate Slurry (CHS), Cryogenic or Encapsulated (Ice Ball) Systems are included in the scope, permit applicant should move this form to "Yes".	☐	☐
○	●	NRCA-MCH-16-A Supply Air Temperature Reset Controls	☐	☐
○	●	NRCA-MCH-17-A Condenser Water Temperature Reset Controls	☐	☐
○	●	NRCA-MCH-18-A Energy Management Control Systems	☐	☐

Registration Number: — Registration Date/Time: — Registration Provider: Energysoft

CA Building Energy Efficiency Standards - 2019 Nonresidential Compliance — Report Version: 2019.0.001 Schema Version: rev 20190401 — Report Generated: 2020-09-23 10:53:45

STATE OF CALIFORNIA
Mechanical Systems
NRCC-MCH-E — CALIFORNIA ENERGY COMMISSION

CERTIFICATE OF COMPLIANCE		NRCC-MCH-E
Project Name:	CCC Willits - Multi-Purpose Building	Report Page: (Page 12 of 13)
Project Address:		Date Prepared: 9/23/2020

O. DECLARATION OF REQUIRED CERTIFICATES OF ACCEPTANCE

○	●	NRCA-MCH-19-A Occupancy Sensor Controls	☐	☐
○	●	NRCA-MCH-20 Multi-Family Ventilation	☐	☐
○	●	NRCA-MCH-21 Multi-Family Envelope Leakage	☐	☐

P. DECLARATION OF REQUIRED CERTIFICATES OF VERIFICATION

Selections have been made based on information provided in previous tables of this document. If any selection needs to be changed, please explain why in Table E Additional Remarks. These documents must be completed by a HERS Rater and provided to the building inspector during construction. The final documents must be creted by a HERS Providrs registry, but drafts can be found online at https://www.energy.ca.gov/title24/2019standards/2019_compliance_documents/Nonresidential_Documents/NRCV/

Yes	No	Form/Title	Field Inspector Pass	Field Inspector Fail
○	●	NRCV-MCH-04-H Duct Leakage Test *NOTE: Must be completed by a HERS Rater*	☐	☐
○	●	NRCV-MCH-24 Enclosure Air Leakage Worksheet *NOTE: Must be completed by a HERS Rater*	☐	☐
○	●	NRCV-MCH-27 High-rise Resdential *NOTE: Must be completed by a HERS Rater*	☐	☐
○	●	NRCV-MCH-32 Local Mechanical Exhaust *NOTE: Must be completed by a HERS Rater*	☐	☐

Q. MANDATORY MEASURES DOCUMENTATION LOCATION

This table is used to indicate where mandatory measures are documented in the plan set or construction documentation.

01		02
Compliance with Mandatory Measures documented through MCH Mandatory Measures Note Block[1]	Yes	Plan sheet or construction document location: M-Sheets

Registration Number: — Registration Date/Time: — Registration Provider: Energysoft

CA Building Energy Efficiency Standards - 2019 Nonresidential Compliance — Report Version: 2019.0.001 Schema Version: rev 20190401 — Report Generated: 2020-09-23 10:53:45

STATE OF CALIFORNIA
Mechanical Systems
NRCC-MCH-E — CALIFORNIA ENERGY COMMISSION

CERTIFICATE OF COMPLIANCE		NRCC-MCH-E
Project Name:	CCC Willits - Multi-Purpose Building	Report Page: (Page 13 of 13)
Project Address:		Date Prepared: 9/23/2020

DOCUMENTATION AUTHOR'S DECLARATION STATEMENT

I certify that this Certificate of Compliance documentation is accurate and complete.

Documentation Author Name: Jessica Hughey	Documentation Author Signature:
Company: Capital Engineering Consultants Inc.	Signature Date: 10/20/2020
Address: 11020 Sun Center Dr. Suite 100	CEA/ HERS Certification Identification (if applicable):
City/State/Zip: Rancho Cordova CA 95670	Phone: (916) 850-3500

RESPONSIBLE PERSON'S DECLARATION STATEMENT

I certify the following under penalty of perjury, under the laws of the State of California:
1. The information provided on this Certificate of Compliance is true and correct.
2. I am eligible under Division 3 of the Business and Professions Code to accept responsibility for the building design or system design identified on this Certificate of Compliance (responsible designer)
3. The energy features and performance specifications, materials, components, and manufactured devices for the building design or system design identified on this Certificate of Compliance conform to the requirements of Title 24, Part 1 and Part 6 of the California Code of Regulations.
4. The building design features or system design features identified on this Certificate of Compliance are consistent with the information provided on other applicable compliance documents, worksheets, calculations, plans and specifications submitted to the enforcement agency for approval with this building permit application.
5. I will ensure that a completed signed copy of this Certificate of Compliance shall be made available with the building permit(s) issued for the building, and made available to the enforcement agency for all applicable inspections. I understand that a completed signed copy of this Certificate of Compliance is required to be included with the documentation the builder provides to the building owner at occupancy.

Responsible Designer Name: Kevin D. Stillman	Responsible Designer Signature:
Company: Capital Engineering Consultants, Inc.	Date Signed: 2020-09-23
Address: 11020 Sun Center Dr. Suite 100	License: M 33498
City/State/Zip: Rancho Cordova CA 95670	Phone:

Registration Number: — Registration Date/Time: — Registration Provider: Energysoft

CA Building Energy Efficiency Standards - 2019 Nonresidential Compliance — Report Version: 2019.0.001 Schema Version: rev 20190401 — Report Generated: 2020-09-23 10:53:45

STATE OF CALIFORNIA
Domestic Water Heating System
NRCC-PLB-E — CALIFORNIA ENERGY COMMISSION

CERTIFICATE OF COMPLIANCE		NRCC-PLB-E
Project Name:	CCC Willits - Multi-Purpose Building	Report Page: (Page 1 of 7)
Project Address:		Date Prepared: 9/23/2020

This document is used to demonstrate compliance for nonresidential occupancies with requirements in §110.1, §110.3, §120.3, and §140.5, and with requirements in §141.0 for additions and alterations, for domestic water heating scopes using the prescriptive path. For high-rise residential and hotel/motel occupancies compliance is demonstrated with requirements in §110.1, §110.3, §120.3, §150.0 and §150.1(c)8, and with requirements §150.2 for additions.

A. GENERAL INFORMATION

01	Project Location (city)	Willits	02	Climate Zone	2
03	Occupancy Types Within Project (select all that apply):				
☒ Nonresidential	☐ High-Rise Residential	☐ Hotel/Motel			
☐ State Building	☐ Healthcare Facility	☐ Other (Write In)			

B. PROJECT SCOPE

This table includes domestic water heating systems that are within the scope of the permit application and are demonstrating compliance using the prescriptive paths outlined in §140.5, §150.1(c)8, and §141.0(a), or §141.0(b)2N for additions or alterations. Solar water heating systems are documented on the NRCC-SRA compliance document. Combined hydronic water heating systems are documented on the NRCC-MCH compliance document.

01	02	03		
My project consists of (check all that apply):	System Type[1,2]	System Components		
☒ New system (DHW system being installed for the first time in newly constructed building)	Individual System (serving nonresidential spaces)	☒ Equipment	☒ Distribution	☒ Controls
☐ System Alteration (equipment, distribution or controls)		☐ Equipment	☐ Distribution	☐ Controls

[1] *FOOTNOTES: Point of use water heaters, or other non-central systems used to serve nonresidential spaces, are considered individual systems.*

[2] *Dwelling units refers to hotel/motel guest rooms and units in a high-rise residential occupancy.*

Registration Number: — Registration Date/Time: — Registration Provider: Energysoft

CA Building Energy Efficiency Standards - 2019 Nonresidential Compliance — Report Version: 2019.0.001 Schema Version: rev 20190401 — Report Generated: 2020-09-23 10:53:45

STATE OF CALIFORNIA
Domestic Water Heating System
NRCC-PLB-E — CALIFORNIA ENERGY COMMISSION

CERTIFICATE OF COMPLIANCE		NRCC-PLB-E
Project Name:	CCC Willits - Multi-Purpose Building	Report Page: (Page 2 of 7)
Project Address:		Date Prepared: 9/23/2020

C. COMPLIANCE RESULTS

Table C will indicate if the project data input into the compliance document is compliant with water heating requirements. If this table says "DOES NOT COMPLY" or "COMPLIES with Exceptional Conditions" refer to Table D or the table indicated as not compliant for guidance.

01	02	03	04
Domestic Hot Water Equipment	Distribution Systems	Controls	Compliance Results
Table F	Table G	Table H	
Yes	Yes	Yes	COMPLIES

D. EXCEPTIONAL CONDITIONS

This table is auto-filled with uneditable comments because of selections made or data entered in tables throughout the form.

E. ADDITIONAL REMARKS

This table is includes remarks made by the permit applicant to the Authority Having Jurisdiction.

Registration Number: — Registration Date/Time: — Registration Provider: Energysoft

CA Building Energy Efficiency Standards - 2019 Nonresidential Compliance — Report Version: 2019.0.001 Schema Version: rev 20190401 — Report Generated: 2020-09-23 10:53:45

STATE OF CALIFORNIA
Domestic Water Heating System
NRCC-PLB-E — CALIFORNIA ENERGY COMMISSION

CERTIFICATE OF COMPLIANCE		NRCC-PLB-E
Project Name:	CCC Willits - Multi-Purpose Building	Report Page: (Page 3 of 7)
Project Address:		Date Prepared: 9/23/2020

F. DOMESTIC HOT WATER EQUIPMENT

This table is used to demonstrate compliance with mandatory equipment requirements in §110.1 and §110.3. For high-rise residential and hotel/motel occupancies, compliance with prescriptive requirements in §150.1(c)8 must also be demonstrated and with §150.2 for addition and alteration scopes.

Equipment Schedule: Individual Systems

01	02	03	04	05	06
Name or Item Tag	Equipment Type	Volume (gal)	Max GPM/ First Hour Rating (FHR)	Rated Uniform Energy Factor (UEF)	Minimum Required Uniform Energy Factor (UEF)[1]
Instantaneous Electric	Electric Storage	<=2	FHR >=75	0.98	0

[1] *FOOTNOTE: Compliant equipment may be found in the Modernized Appliance Efficiency Database System (MAEDBS) on the Energy Commission website: https://cacertappliances.energy.ca.gov/Pages/Search/AdvancedSearch.aspx*

Water Heating Equipment All Occupancies

	Yes	No	Not Applicable	Requirement
18	☐	☐	☒	Unfired storage tank insulation shall have Internal + External >=R-16 OR External >=R-12. Label required per §110.3(c)3
19	☐	☐	☒	New state buildings 60% of energy for service water heating from site solar energy or recovered energy per §110.3(c)5
20	☐	☐	☒	Isolation valves for instantaneous water heater with input rating <6.8 kBTUH or 2 kW has been specified per §110.3(c)6

Registration Number: — Registration Date/Time: — Registration Provider: Energysoft

CA Building Energy Efficiency Standards - 2019 Nonresidential Compliance — Report Version: 2019.0.001 Schema Version: rev 20190401 — Report Generated: 2020-09-23 10:53:45

STATE OF CALIFORNIA
Domestic Water Heating System
NRCC-PLB-E — CALIFORNIA ENERGY COMMISSION

CERTIFICATE OF COMPLIANCE		NRCC-PLB-E
Project Name:	CCC Willits - Multi-Purpose Building	Report Page: (Page 4 of 7)
Project Address:		Date Prepared: 9/23/2020

G. DOMESTIC HOT WATER DISTRIBUTION SYSTEM

This table is used to demonstrate compliance for nonresidential occupancies with distribution requirements in §120.3 and §140.5. For high-rise residential and hotel/motel occupancies, compliance is demonstrated with requirements §110.3(c), §120.3, §150.0, §150.1

Mandatory Pipe Insulation All Occupancies

12	☒	For systems serving nonresidential spaces, pipe insulation for the following applications is specified to comply with Table 120.3-A (see below) per §120.3 : • Recirculating system piping, including supply and return piping of the water heater • The first 8 ft of hot and cold outlet piping, including between storage tank and heat trap, for a nonrecirculating storage system • Pipes that are externally heated
13	☒	Insulation shall be protected from damage, including that due to sunlight, moisture, equipment maintenance, and wind. Insulation exposed to weather shall be installed with a cover suitable for outdoor service per §120.3(b) and §150.0(j)3

TABLE 120.3-A PIPE INSULATION THICKNESS

Fluid Temperature Range (°F)	Conductivity Range (Btu-in per hour per ft² per °F)	Insulation Mean Rating Temp (°F)	Nominal Pipe Diameter (in)		
			< 1	1 to < 1.5	1.5 to < 4
			Minimum Insulation Required		
105-140	0.22 - 0.28	100	1.0 in or R-7.7	1.5 in or R-12.5	1.5 in or R-11

Registration Number: — Registration Date/Time: — Registration Provider: Energysoft

CA Building Energy Efficiency Standards - 2019 Nonresidential Compliance — Report Version: 2019.0.001 Schema Version: rev 20190401 — Report Generated: 2020-09-23 10:53:45

STATE OF CALIFORNIA
Domestic Water Heating System
NRCC-PLB-E — CALIFORNIA ENERGY COMMISSION

CERTIFICATE OF COMPLIANCE		NRCC-PLB-E
Project Name:	CCC Willits - Multi-Purpose Building	Report Page: (Page 5 of 7)
Project Address:		Date Prepared: 9/23/2020

H. DOMESTIC HOT WATER CONTROLS

This table is used to demonstrate compliance with control requirements in §110.3 for all occupancies. For high-rise residential and hotel/motel occupancies, compliance is also demonstrated with requirements in §150.1(c)8

	Yes	No	Not Applicable	Requirement
01	☒	☐	☐	Construction documents require manufacturer certification that service water-heating systems are equipped with automatic temperature controls capable of adjusting temperature settings per §110.3(a).
02	☐	☐	☒	Systems with capacity > 167,000 BTUH equipped with outlet temperature controls per §110.3(c)1 unless covered by California Plumbing Code 613.0.
03	☐	☐	☒	Controls for circulating pumps or electrical heat trace systems are capable of automatically turning off the system per §110.3(c)2 unless systems serves healthcare facility.
04	☐	☐	☒	For recirculation systems serving multiple dwelling units, design includes automatic pump controls per §150.1(c)8Bii, or §150.2 for additions or alterations.
05	☐	☐	☒	For recirculation systems serving individual dwelling units, design includes manual on/off controls as specified in Reference Appendix RA4.4.9 per §150.1(c)8.
06	☐	☐	☒	For replacement single heat pump water heaters serving individual dwelling units in climate zone 1-15, design includes communication interface that meets demand responsive control requirements of §110.12(a) per §150.2(b)1Hiii.

I. DECLARATION OF REQUIRED CERTIFICATES OF INSTALLATION

Selections have been made based on information provided in this document. If any selection have been changed by permit applicant, an explanation should be included in Table E. Additional Remarks. These documents must be provided to the building inspector during construction and can be found online at https://www.energy.ca.gov/title24/2019standards/2019_compliance_documents/Nonresidential_Documents/NRCI/

Yes	No	Form/Title	Field Inspector Pass	Field Inspector Fail
●	○	NRCI-PLB-01-E - Must be submitted for all buildings	☐	☐
○	●	NRCI-PLB-02-E - Must be submitted for high-rise residential and hotel/motel central hot water distribution systems to be recognized for compliance.	☐	☐
○	●	NRCI-PLB-03-E - Must be submitted for high-rise residential and hotel/motel single dwelling unit hot water distribution systems to be recognized for compliance.	☐	☐

Registration Number: — Registration Date/Time: — Registration Provider: Energysoft

CA Building Energy Efficiency Standards - 2019 Nonresidential Compliance — Report Version: 2019.0.001 Schema Version: rev 20190401 — Report Generated: 2020-09-23 10:53:45

Plot Date: 5/18/2021 1:26:55 PM
File Name: J:\Revit Local Files\CEC_DGS CCC Willits_MP_MP18_Central_jdavaKT1447.rvt

IDENTIFICATION STAMP
DIV. OF THE STATE ARCHITECT
APP: 02-118630 INC:
REVIEWED FOR
SS ☐ FLS ☐ ACS ☑
DATE: 04/13/2021

OFFICE OF THE STATE FIRE MARSHAL
APPROVED FIRE AND PANIC ONLY
Approval of this plan does not authorize or approve any omission or deviation from applicable regulations. Final approval is subject to field inspection. One set of approved plans shall be available on the project site at all times.
PERMIT NO. 20-N-2332-CP
REVIEWED BY: LEO CATAYLO, OSFM
DATE: 4/1/2021

GENERAL SERVICES
Department of General Services
State of California
Real Estate Services Division
Project Management & Development Branch
707 Third Street, Suite 4-105
West Sacramento, California 95605

NICHOLS MELBURG & ROSSETTO
ARCHITECTS + ENGINEERS
300 Knollcrest Drive
Redding, CA. 96002
(530) 222-3300 (530) 222-3538 FAX
http://www.nmrdesign.com

Copyright © 2019
All ideas, designs, arrangements and plans indicated or represented by this drawing are owned by, and the property of, NICHOLS, MELBURG and ROSSETTO and were created, evolved and developed for use on, and in conjunction with, the specified project. None of such ideas, designs, arrangements or plans shall be used by, or disclosed to any person, firm or corporation for any purpose whatsoever without the written permission of NICHOLS, MELBURG and ROSSETTO

LICENSE STAMPS

REGISTERED PROFESSIONAL ENGINEER — KEVIN D. STILLMAN — M 33498 — EXPIRES 9/30/22 — MECHANICAL — STATE OF CALIFORNIA
DATE SIGNED: 10-20-20

CONSULTANT

CAPITAL
ENGINEERING CONSULTANTS, INC.
RANCHO CORDOVA, CALIFORNIA
JD - HC/JH — PM - DESIGN TEAM
181205.00 — PROJECT NO.

DRAWING STATUS
CONSTRUCTION DOCUMENTS

ISSUE

No.	Date	Description
1	10/22/2020	INITIAL PLAN REVIEW
2	01/22/2021	AGENCY RESUBMITTAL
3	03/22/2021	AGENCY RESUBMITTAL

If drawing is not 30" x 42" it is a reduced print

PROJECT
RESIDENTIAL CENTER, UKIAH: REPLACEMENT OF EXISTING RESIDENTIAL CENTER
440 EAST HILL ROAD
WILLITS, CALIFORNIA 95490
MENDOCINO COUNTY
CALIFORNIA CONSERVATION CORP

Supervisor	Designed	Drawn
		Author

DSA Application No.
02-118630

SHEET TITLE
MULTI-PURPOSE BLDG TITLE 24 COMPLIANCE

DGS Project Number: 0000000000001826
NMR Project Number: 18-6456

Sheet Scale

Sheet Number
M402M

ISSUE DATE
July 9, 2021

STATE OF CALIFORNIA
Domestic Water Heating System
NRCC-PLB-E — CALIFORNIA ENERGY COMMISSION

CERTIFICATE OF COMPLIANCE			**NRCC-PLB-E**
Project Name:	CCC Willits - Multi-Purpose Building	**Report Page:**	**(Page 6 of 7)**
Project Address:		**Date Prepared:**	9/23/2020

J.DECLARATION OF REQUIRED CERTIFICATES OF ACCEPTANCE

There are no Certificates of Acceptance applicable to service water heating requirements.

K. DECLARATION OF REQUIRED CERTIFICATES OF VERIFICATION

Selections have been made based on information provided in this document. If any selection have been changed by permit applicant, an explanation should be included in Table E. Additional Remarks. These documents must be completed by a HERS Rater and provided to the building inspector during construction. The final documents must be created by a HERS Providers registry, but drafts can be found online at https://www.energy.ca.gov/title24/2019standards/2019_compliance_documents/Nonresidential_Documents/NRCI/

Yes	No	Form/Title	Field Inspector Pass	Field Inspector Fail
○	●	NRCV-PLB-21-H High-rise Residential Central Hot Water Distribution HERS Verification	☐	☐
○	●	NRCV-PLB-22-H High-rise Residential Individual Dwelling Unit Hot Water Distribution HERS Verification	☐	☐

Registration Number: | Registration Date/Time: | Registration Provider: Energysoft

CA Building Energy Efficiency Standards - 2019 Nonresidential Compliance | Report Version: 2019.0.001 Schema Version: rev 20190401 | Report Generated: 2020-09-23 10:53:45

STATE OF CALIFORNIA
Domestic Water Heating System
NRCC-PLB-E — CALIFORNIA ENERGY COMMISSION

CERTIFICATE OF COMPLIANCE			**NRCC-PLB-E**
Project Name:	CCC Willits - Multi-Purpose Building	**Report Page:**	**(Page 7 of 7)**
Project Address:		**Date Prepared:**	9/23/2020

DOCUMENTATION AUTHOR'S DECLARATION STATEMENT

I certify that this Certificate of Compliance documentation is accurate and complete.

Documentation Author Name: Jessica Hughey	Documentation Author Signature:
Company: Capital Engineering Consultants Inc.	Signature Date: 10/21/2020
Address: 11020 Sun Center Dr. Suite 100	CEA/ HERS Certification Identification (if applicable):
City/State/Zip: Rancho Cordova CA 95670	Phone: (916) 850-3500

RESPONSIBLE PERSON'S DECLARATION STATEMENT

I certify the following under penalty of perjury, under the laws of the State of California:
1. The information provided on this Certificate of Compliance is true and correct.
2. I am eligible under Division 3 of the Business and Professions Code to accept responsibility for the building design or system design identified on this Certificate of Compliance (responsible designer)
3. The energy features and performance specifications, materials, components, and manufactured devices for the building design or system design identified on this Certificate of Compliance conform to the requirements of Title 24, Part 1 and Part 6 of the California Code of Regulations.
4. The building design features or system design features identified on this Certificate of Compliance are consistent with the information provided on other applicable compliance documents, worksheets, calculations, plans and specifications submitted to the enforcement agency for approval with this building permit application.
5. I will ensure that a completed signed copy of this Certificate of Compliance shall be made available with the building permit(s) issued for the building, and made available to the enforcement agency for all applicable inspections. I understand that a completed signed copy of this Certificate of Compliance is required to be included with the documentation the builder provides to the building owner at occupancy.

Responsible Designer Name: Kevin D. Stillman	Responsible Designer Signature:
Company: Capital Engineering Consultants, Inc.	Date Signed: 2020-09-23
Address: 11020 Sun Center Dr. Suite 100	License: M 33498
City/State/Zip: Rancho Cordova CA 95670	Phone:

Registration Number: | Registration Date/Time: | Registration Provider: Energysoft

CA Building Energy Efficiency Standards - 2019 Nonresidential Compliance | Report Version: 2019.0.001 Schema Version: rev 20190401 | Report Generated: 2020-09-23 10:53:45

STATE OF CALIFORNIA
Process Systems
NRCC-PRC-E — CALIFORNIA ENERGY COMMISSION

CERTIFICATE OF COMPLIANCE			**NRCC-PRC-E**
Project Name:	CCC Willits - Multi-Purpose Building	**Report Page:**	**(Page 1 of 6)**
Project Address:		**Date Prepared:**	10/21/2020

A. GENERAL INFORMATION

01	Project Location (city)	Willits	04	Total Conditioned Floor Area	14208
02	Climate Zone	2	05	Total Unconditioned Floor Area	291
03	Occupancy Types Within Project:		06	# of Stories (Habitable Above Grade)	1
☒	Office	☐ Retail	☐	Non-refrigerated Warehouse	
☐	Hotel/ Motel	☐ School	☐	Healthcare Facility	
☐	High-Rise Residential	☐ Relocatable Class Bldg	☒	Other (write in)	

B. PROJECT SCOPE

This table includes process systems that are within the scope of the permit application and are demonstrating compliance using the prescriptive path outlined in §140.9 or §141.1 for alterations.

My project consists of: (check all that apply):

01		02	
☐	Refrigerated Spaces <3,000 ft² total (no Title 24, Pt6 requirements)	☐	Elevator Lighting & Ventilation Controls (mandatory §120.6(f))
☐	Refrigerated Spaces >=3,000 ft² Total (mandatory §120.6(a))	☐	Escalator & Moving Walkway Speed Controls (mandatory §120.6(g))
☐	Food Stores >8,000 ft² cfa (mandatory §120.6(b))	☐	Computer Rooms >20 W/ ft² Power Density (prescriptive §140.9(a))[1]
☐	Enclosed Parking Garage Exhaust >=10,000 cfm (mandatory §120.6(c))	☒	Commercial Kitchen Ventilation/Exhaust (prescriptive §140.9(b))[1]
☐		☐	Laboratory Exhaust/Factory Exhaust & Fume Hood (prescriptive §140.9(c))[1]
☐	Compressed Air Systems Combined HP >= 25 (mandatory §120.6(e))		

[1] *FOOTNOTES: These building features can comply using the performance method. If using the performance method for these features, compliance should be demonstrated on the NRCC-PRF-E.*

Alert! Refrigerated Warehouses and refrigerated spaces that are less than 3,000 square feet do not have requirements under Title 24, Part 6 and therefore are not documented on the NRCC-PRC-E. Systems serving these spaces shall meet the requirements of the Appliance Efficiency Regulations for walk-in coolers or freezers contained in the Appliance Efficiency Regulations (California Code of Regulations, Title 20, Sections 1601 through 1608).

Registration Number: | Registration Date/Time: | Registration Provider: Energysoft

CA Building Energy Efficiency Standards - 2019 Nonresidential Compliance | Report Version: 2019.0.001 Schema Version: rev 20190401 | Report Generated: 2020-10-21 15:25:42

STATE OF CALIFORNIA
Process Systems
NRCC-PRC-E — CALIFORNIA ENERGY COMMISSION

CERTIFICATE OF COMPLIANCE			**NRCC-PRC-E**
Project Name:	CCC Willits - Multi-Purpose Building	**Report Page:**	**(Page 2 of 6)**
Project Address:		**Date Prepared:**	10/21/2020

C. COMPLIANCE RESULTS

Results in this table are automatically calculated from data input and calculations in Tables F through O. Note: If any cell on this table says "COMPLIES with Exceptional Conditions" refer to Table D. Exceptional Conditions for guidance or see applicable Table referenced below.

01	02	03	04	05	06	07	08	09	10	11
Refrigerated Warehouse/ Space §120.6(a) (See Table F)	Commercial Refrigeration §120.6(b) (See Table G)	Parking Garage Exhaust §120.6(c) (See Table H)	Process Boilers §120.6(d) (See Table I)	Compressed Air Systems §120.6(e) (See Table J)	Elevators §120.6(f) (See Table K)	Escalators & Moving Walkways §120.6(g) (See Table L)	Computer Rooms §140.9(a) (See Table M)	Commercial Kitchens §140.9(b) (See Table N)	Laboratory/Factory Exhaust §140.9(c) (See Table O)	**Compliance Results**
								Yes		COMPLIES

D. EXCEPTIONAL CONDITIONS

This table is auto-filled with uneditable comments because of selections made or data entered in tables throughout the form.

E. ADDITIONAL REMARKS

This table includes remarks made by the permit applicant to the Authority Having Jurisdiction.

F. REFRIGERATED WAREHOUSES/SPACES

This section does not apply to this project.

G. COMMERCIAL REFRIGERATION

This section does not apply to this project.

H. ENCLOSED PARKING GARAGE EXHAUST

This section does not apply to this project.

I. PROCESS BOILER

This section does not apply to this project.

J. COMPRESSED AIR SYSTEMS

This section does not apply to this project.

Registration Number: | Registration Date/Time: | Registration Provider: Energysoft

CA Building Energy Efficiency Standards - 2019 Nonresidential Compliance | Report Version: 2019.0.001 Schema Version: rev 20190401 | Report Generated: 2020-10-21 15:25:42

STATE OF CALIFORNIA
Process Systems
NRCC-PRC-E — CALIFORNIA ENERGY COMMISSION

CERTIFICATE OF COMPLIANCE			**NRCC-PRC-E**
Project Name:	CCC Willits - Multi-Purpose Building	**Report Page:**	**(Page 3 of 6)**
Project Address:		**Date Prepared:**	10/21/2020

K. ELEVATOR LIGHTING AND VENTILATION

This section does not apply to this project.

L. ESCALATORS AND MOVING WALKWAYS SPEED CONTROLS

This section does not apply to this project.

M. COMPUTER ROOM SYSTEM SUMMARY

This section does not apply to this project.

N. COMMERCIAL KITCHEN EXHAUST AND VENTILATION

This table contains all new and replacement hoods being installed within the scope of the permit application. The inputs within Table N are used to demonstrate compliance within §140.9(b).

Kitchen Ventilation §140.9(b)2

1	☐	Existing kitchen hoods not being replaced as part of an addition or alteration (do not need to meet requirements)
	Requirements	
2	Replacement Air to Hood Compliance Method §140.9(b)1A	
	Not providing replacement air directly to the hood(s)	
3	Mechanically cooled or heated makeup air delivered to any space with a kitchen hood is designed per 140.9(b)2A to not exceed the greater of:	
	The hood exhaust flow minus the available transfer air from adjacent spaces	
4	Location that is supplying transfer air:	
5	The kitchen/ dining facility has a total Type I and Type II kitchen hood exhaust airflow > 5000 cfm and is designed to have one of the following per 140.9(b)2B:	
	Demand ventilation system(s) on at least 75% of the exhaust air per 140.9(b)2Bii	

Kitchen Exhaust: Airflow Rate §140.9(b)1B

Registration Number: | Registration Date/Time: | Registration Provider: Energysoft

CA Building Energy Efficiency Standards - 2019 Nonresidential Compliance | Report Version: 2019.0.001 Schema Version: rev 20190401 | Report Generated: 2020-10-21 15:25:42

STATE OF CALIFORNIA
Process Systems
NRCC-PRC-E — CALIFORNIA ENERGY COMMISSION

CERTIFICATE OF COMPLIANCE			**NRCC-PRC-E**
Project Name:	CCC Willits - Multi-Purpose Building	**Report Page:**	**(Page 4 of 6)**
Project Address:		**Date Prepared:**	10/21/2020

N. COMMERCIAL KITCHEN EXHAUST AND VENTILATION

1	Kitchen Name or Item Tag	Kitchen	Compliance Method per §140.9(b)1B		Type1 hood design exhaust rates do not exceed the maximum allowed per §140.9(b)1 as documented below	
02	03	04	05	06	07	08
Name or Item Tag	Hood Type[1]	Hood Style	Hood Length (ft)	Equipment Duty	Design Hood Exhaust Rate CFM	Max Hood Exhaust Rate Allowed CFM
	Type I	Single Island	8	Light Duty	1680	2240
	Type I	Single Island	9	Light Duty	1890	2520
	Type I	Single Island	8	Light Duty	1980	2240
	Type I	Single Island	9	Light Duty	2164	2520

[1] *FOOTNOTES: Type II hoods do not have a max hood exhaust air rate per §140.9(b)1B*

O. LABORATORY AND FACTORY EXHAUST AND FUME HOODS

This section does not apply to this project.

P. DECLARATION OF REQUIRED CERTIFICATES OF INSTALLATION

Selections have been made based on information provided in this document. If any selection have been changed by permit applicant, an explanation should be included in Table E. Additional Remarks. These documents must be provided to the building inspector during construction and can be found online at https://www.energy.ca.gov/title24/2019standards/2019_compliance_documents/Nonresidential_Documents/NRCI/

Yes	No	Form/Title	Field Inspector Pass	Field Inspector Fail
●	○	NRCI-PRC-01-E - Covered Process	☐	☐

Registration Number: | Registration Date/Time: | Registration Provider: Energysoft

CA Building Energy Efficiency Standards - 2019 Nonresidential Compliance | Report Version: 2019.0.001 Schema Version: rev 20190401 | Report Generated: 2020-10-21 15:25:42

STATE OF CALIFORNIA
Process Systems
NRCC-PRC-E — CALIFORNIA ENERGY COMMISSION

CERTIFICATE OF COMPLIANCE			**NRCC-PRC-E**
Project Name:	CCC Willits - Multi-Purpose Building	**Report Page:**	**(Page 5 of 6)**
Project Address:		**Date Prepared:**	10/21/2020

Q. DECLARATION OF REQUIRED CERTIFICATES OF ACCEPTANCE

Selections have been made based on information provided in this document. If any selection have been changed by permit applicant, an explanation should be included in Table E. Additional Remarks. These documents must be provided to the building inspector during construction and must be completed through an Acceptance Test Technician Certification Provider (ATTCP). For more information visit: http://www.energy.ca.gov/title24/attcp/providers.html

Yes	No	Form/Title	Field Inspector Pass	Field Inspector Fail
○	●	NRCA-PRC-01-F Compressed Air Systems	☐	☐
●	○	NRCA-PRC-02-F Kitchen Exhaust	☐	☐
○	●	NRCA-PRC-03-F Garage Exhaust	☐	☐
○	●	NRCA-PRC-04-F Refrigerated Warehouses - Evaporator Fan Motor Controls	☐	☐
○	●	NRCA-PRC-05-F Refrigerated Warehouses - Evaporative Condenser Controls	☐	☐
○	●	NRCA-PRC-06-F Refrigerated Warehouses - Air Cooled Condenser Controls	☐	☐
○	●	NRCA-PRC-16 Refrigerated Warehouses - Adiabatic Condenser Controls	☐	☐
○	●	NRCA-PRC-07 Refrigerated Warehouses - Variable Speed Compressor	☐	☐
○	●	NRCA-PRC-08-F Refrigerated Warehouses - Electric Resistance Underslab Heating System	☐	☐
○	●	NRCA-PRC-12-F Elevator Lighting & Ventilation Controls	☐	☐
○	●	NRCA-PRC-13-F Escalators & Moving Walkways Speed Controls	☐	☐
○	●	NRCA-PRC-14-F Lab Exhaust Ventilation Systems	☐	☐
○	●	NRCA-PRC-15-F Fume Hood Automatic Sash Closure Systems	☐	☐

Registration Number: | Registration Date/Time: | Registration Provider: Energysoft

CA Building Energy Efficiency Standards - 2019 Nonresidential Compliance | Report Version: 2019.0.001 Schema Version: rev 20190401 | Report Generated: 2020-10-21 15:25:42

STATE OF CALIFORNIA
Process Systems
NRCC-PRC-E — CALIFORNIA ENERGY COMMISSION

CERTIFICATE OF COMPLIANCE			**NRCC-PRC-E**
Project Name:	CCC Willits - Multi-Purpose Building	**Report Page:**	**(Page 6 of 6)**
Project Address:		**Date Prepared:**	10/21/2020

DOCUMENTATION AUTHOR'S DECLARATION STATEMENT

I certify that this Certificate of Compliance documentation is accurate and complete.

Documentation Author Name: Jessica Hughey	Documentation Author Signature:
Company: Capital Engineering Consultants Inc.	Signature Date: 10/21/2020
Address: 11020 Sun Center Dr. Suite 100	CEA/ HERS Certification Identification (if applicable):
City/State/Zip: Rancho Cordova CA 95670	Phone: (916) 850-3500

RESPONSIBLE PERSON'S DECLARATION STATEMENT

I certify the following under penalty of perjury, under the laws of the State of California:
1. The information provided on this Certificate of Compliance is true and correct.
2. I am eligible under Division 3 of the Business and Professions Code to accept responsibility for the building design or system design identified on this Certificate of Compliance (responsible designer)
3. The energy features and performance specifications, materials, components, and manufactured devices for the building design or system design identified on this Certificate of Compliance conform to the requirements of Title 24, Part 1 and Part 6 of the California Code of Regulations.
4. The building design features or system design features identified on this Certificate of Compliance are consistent with the information provided on other applicable compliance documents, worksheets, calculations, plans and specifications submitted to the enforcement agency for approval with this building permit application.
5. I will ensure that a completed signed copy of this Certificate of Compliance shall be made available with the building permit(s) issued for the building, and made available to the enforcement agency for all applicable inspections. I understand that a completed signed copy of this Certificate of Compliance is required to be included with the documentation the builder provides to the building owner at occupancy.

Responsible Designer Name: Kevin D. Stillman	Responsible Designer Signature:
Company: Capital Engineering Consultants, Inc.	Date Signed: 2020-10-21
Address: 11020 Sun Center Dr. Suite 100	License: M 33498
City/State/Zip: Rancho Cordova CA 95670	Phone:

Registration Number: | Registration Date/Time: | Registration Provider: Energysoft

CA Building Energy Efficiency Standards - 2019 Nonresidential Compliance | Report Version: 2019.0.001 Schema Version: rev 20190401 | Report Generated: 2020-10-21 15:25:42

Plot Date: 3/16/2021 1:26:06 PM
File Name: L:\Revit Local Files\EECI_DGS CCC Willits_MP_MP18_Central_jdovoh\KTH47.rvt

IDENTIFICATION STAMP
DIV. OF THE STATE ARCHITECT
APP: 02-118630 INC:
REVIEWED FOR
SS ☐ FLS ☐ ACS ☑
DATE: 04/13/2021

OFFICE OF THE STATE FIRE MARSHAL
APPROVED FIRE AND PANIC ONLY
Approval of this plan does not authorize or approve any omission or deviation from applicable regulations. Final approval is subject to field inspection. One set of approved plans shall be available on the project site at all times.
PERMIT NO. 20-N-2332-CP
REVIEWED BY: LEO CATAYLO, OSFM
DATE: 4/ /2021

DGS GENERAL SERVICES
Department of General Services
State of California
Real Estate Services Division
Project Management & Development Branch
707 Third Street, Suite 4-105
West Sacramento, California 95605

NICHOLS MELBURG & ROSSETTO ARCHITECTS + ENGINEERS
300 Knollcrest Drive
Redding, CA. 96002
(530) 222-3300 (530) 222-3538 FAX
http://www.nmrdesign.com

Copyright © 2019
All ideas, designs, arrangements and plans indicated or represented by this drawing are owned by, and the property of, NICHOLS, MELBURG and ROSSETTO and were created, evolved and developed for use on, and in conjunction with, the specified project. None of such ideas, designs, arrangements or plans shall be used by, or disclosed to any person, firm or corporation for any purpose whatsoever without the written permission of NICHOLS, MELBURG and ROSSETTO

LICENSE STAMPS

REGISTERED PROFESSIONAL ENGINEER — KEVIN D. STILLMAN — M 33498 — EXPIRES 9/30/22 — MECHANICAL — STATE OF CALIFORNIA
DATE SIGNED: 10-20-20

CONSULTANT

CAPITAL ENGINEERING CONSULTANTS, INC.
RANCHO CORDOVA, CALIFORNIA
JD - HC/JH — PM - DESIGN TEAM
181205.00 — PROJECT NO.

DRAWING STATUS
CONSTRUCTION DOCUMENTS

ISSUE

No.	Date	Description
1	10/22/2020	INITIAL PLAN REVIEW
2	01/22/2021	AGENCY RESUBMITTAL
3	03/22/2021	AGENCY RESUBMITTAL

If drawing is not 30" x 42" it is a reduced print

PROJECT
RESIDENTIAL CENTER, UKIAH: REPLACEMENT OF EXISTING RESIDENTIAL CENTER
440 EAST HILL ROAD
WILLITS, CALIFORNIA 95490
MENDOCINO COUNTY
CALIFORNIA CONSERVATION CORP

Supervisor	Designed	Drawn
		Author

DSA Application No.
02-118630

SHEET TITLE
MULTI-PURPOSE BLDG TITLE 24 COMPLIANCE

DGS Project Number	NMR Project Number
0000000000001826	18-6456

Sheet Scale

Sheet Number
M403M

ISSUE DATE
July 9, 2021

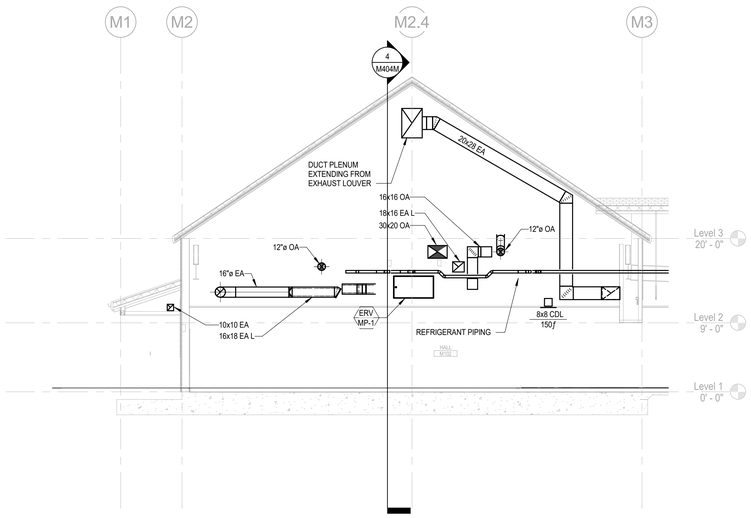

3 M404M HVAC SECTION 3

SCALE: 1/8" = 1'-0"

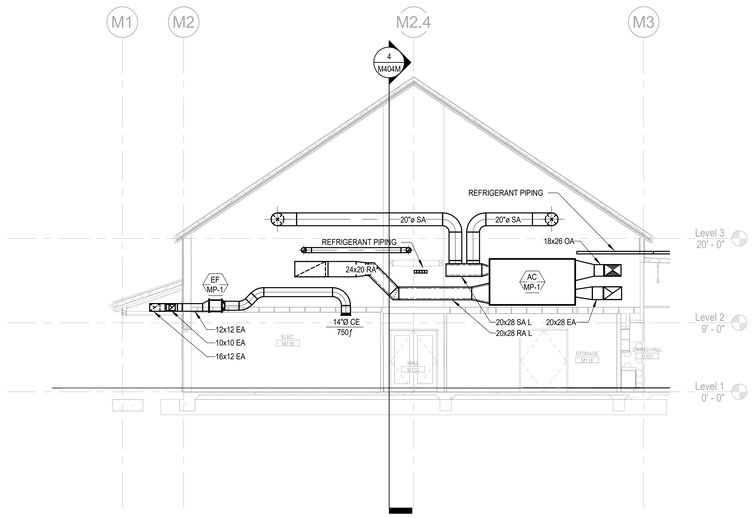

1 M404M HVAC SECTION 1

SCALE: 1/8" = 1'-0"

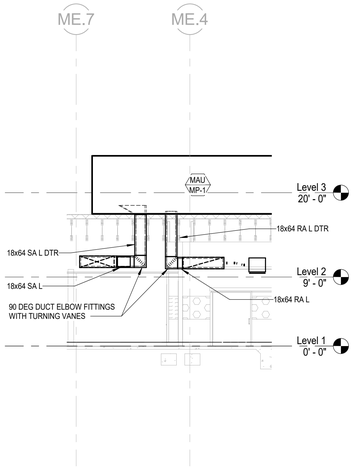

5 M404M HVAC SECTION 5

SCALE: 1/8" = 1'-0"

4 M404M HVAC SECTION 4

SCALE: 1/8" = 1'-0"

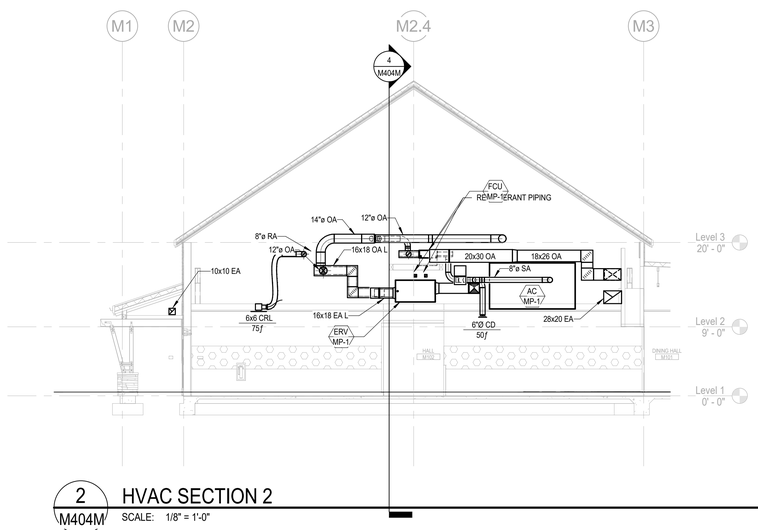

2 M404M HVAC SECTION 2

SCALE: 1/8" = 1'-0"

Plot Date: 3/15/2021 1:26:11 PM
File Name: L:\Revit Local\Files\DECI_DGS CCC Willits_MP_MP18_Central_jdovalKH147.rvt

IDENTIFICATION STAMP
DIV. OF THE STATE ARCHITECT
APP: 02-118630 INC:
REVIEWED FOR
SS ☐ FLS ☐ ACS ☑
DATE: 04/13/2021

OFFICE OF THE STATE FIRE MARSHAL
APPROVED FIRE AND PANIC ONLY
Approval of this plan does not authorize or approve any omission or deviation from applicable regulations. Final approval is subject to field inspection. One set of approved plans shall be available on the project site at all times.
PERMIT NO. 20-N-2332-CP
REVIEWED BY: LEO CATAYLO, OSFM
DATE: 4 / /2021

DGS GENERAL SERVICES
Department of General Services
State of California
Real Estate Services Division
Project Management & Development Branch
707 Third Street, Suite 4-105
West Sacramento, California 95605

NICHOLS MELBURG & ROSSETTO
ARCHITECTS + ENGINEERS
300 Knollcrest Drive
Redding, CA. 960002
(530) 222-3300 (530) 222-3538 FAX
http://www.nmrdesign.com

Copyright © 2019
All ideas, designs, arrangements and plans indicated or represented by this drawing are owned by, and the property of, NICHOLS, MELBURG and ROSSETTO and were created, evolved and developed for use on, and in conjunction with, the specified project. None of such ideas, designs, arrangements or plans shall be used by, or disclosed to any person, firm or corporation for any purpose whatsoever without the written permission of NICHOLS, MELBURG and ROSSETTO.

LICENSE STAMPS

REGISTERED PROFESSIONAL ENGINEER
M 33498
EXPIRES 9/30/22
MECHANICAL
STATE OF CALIFORNIA
DATE SIGNED: 10-20-20

CONSULTANT

CAPITAL
ENGINEERING CONSULTANTS, INC.
RANCHO CORDOVA, CALIFORNIA
JD - HCJH — PM - DESIGN TEAM
18120500 — PROJECT NO.

DRAWING STATUS
CONSTRUCTION DOCUMENTS

ISSUE

No.	Date	Description
1	10/22/2020	INITIAL PLAN REVIEW
2	01/22/2021	AGENCY RESUBMITTAL
3	03/22/2021	AGENCY RESUBMITTAL

If drawing is not 30" x 42" it is a reduced print

PROJECT
RESIDENTIAL CENTER, UKIAH: REPLACEMENT OF EXISTING RESIDENTIAL CENTER
440 EAST HILL ROAD
WILLITS, CALIFORNIA 95490
MENDOCINO COUNTY
CALIFORNIA CONSERVATION CORP

Supervisor	Designed	Drawn
		Author

DSA Application No.
02-118630

SHEET TITLE
MULTI-PURPOSE BLDG
HVAC SECTIONS

DGS Project Number: 000000000001826
NMR Project Number: 18-6456

Sheet Scale: 1/8" = 1'-0"

Sheet Number: M404M

ISSUE DATE
July 9, 2021

KEYNOTES:

1. PROVIDE WINDOW SENSOR AT OPERABLE WINDOW, FOR INTERLOCK WITH FAN COIL, SEE 1/M601.

REFRIGERANT CONCENTRATION CALC

SYSTEM	REFRIGERANT		DESIGN ROOM FLOOR AREA [SQ FT]	DESIGN ROOM CLG HEIGHT [FT]	DESIGN ROOM VOLUME [CU FT]	CONCENTRATION [LBS / 1000 CF]	
	TYPE	CHARGE [LBS]				DESIGN	LIMIT
HP/R-1	R-410A	51.6	222	9'-0"	1,998	25.8	26

NOTES:

1. DESIGN REFRIGERANT CHARGE IS CALCULATED USING BASIS OF DESIGN EQUIPMENT MANUFACTURERS CATALOG DATA FOR FACTORY PRE-CHARGE AND ADDITIONAL CHARGE FOR ASSUMED LINE LENGTHS. INSTALLING CONTRACTOR SHALL PROVIDE UPDATED CALCULATIONS BASED ON ACTUAL REFRIGERANT CHARGE AND MAKE THEM AVAILABLE FOR REVIEW BY FIELD INSPECTOR OR OTHER AGENCIES.
2. CONCENTRATION LIMITS ARE TAKEN FROM 2019 CALIFORNIA MECHANICAL CODE TABLE 1102.3.

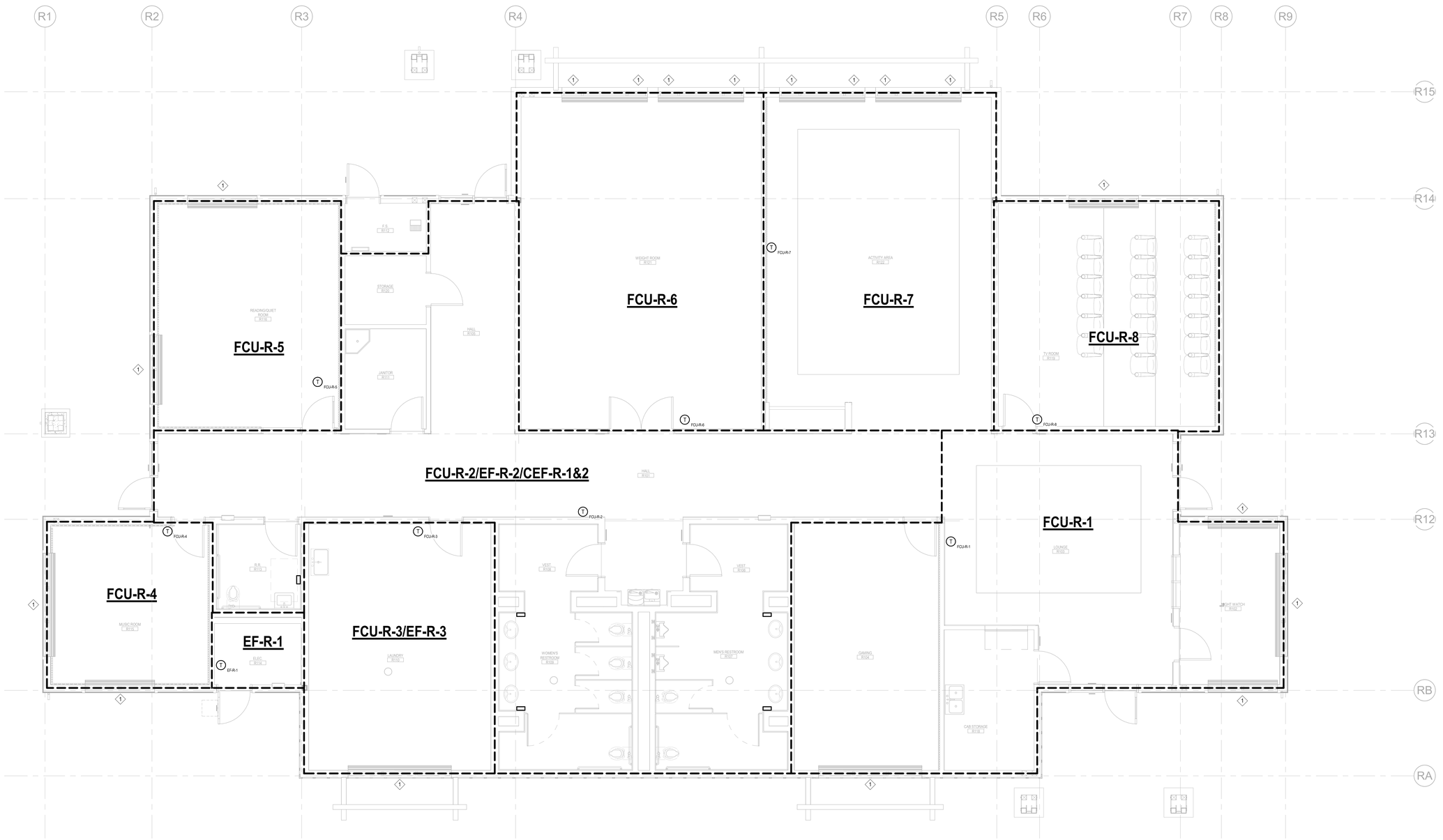

1 M101R RECREATION BLDG HVAC ZONE PLAN

SCALE: 1/4" = 1'-0"

Plot Date: 3/10/2021 1:24:06 PM
File Name: L:\Revit Local Files\CEC_DGS (CCC Willits_Rec_MP18_Central_jdovalKTH47.rvt

IDENTIFICATION STAMP
DIV. OF THE STATE ARCHITECT
APP: 02-118630 INC:
REVIEWED FOR
SS ☐ FLS ☐ ACS ☑
DATE: 04/13/2021

OFFICE OF THE STATE FIRE MARSHAL
APPROVED FIRE AND PANIC ONLY
Approval of this plan does not authorize or approve any omission or deviation from applicable regulations. Final approval is subject to field inspection. One set of approved plans shall be available on the project site at all times.
PERMIT NO. 20-N-2332-CP
REVIEWED BY: LEO CATAYLO, OSFM
DATE: 4/ /2021

DGS GENERAL SERVICES
Department of General Services
State of California
Real Estate Services Division
Project Management & Development Branch
707 Third Street, Suite 4-105
West Sacramento, California 95605

NICHOLS MELBURG & ROSSETTO ARCHITECTS + ENGINEERS
300 Knollcrest Drive
Redding, CA. 96002
(530) 222-3300 (530) 222-3538 FAX
http://www.nmrdesign.com

Copyright © 2019
All ideas, designs, arrangements and plans indicated or represented by this drawing are owned by, and the property of, NICHOLS, MELBURG and ROSSETTO and were created, evolved and developed for use on, and in conjunction with, the specified project. None of such ideas, designs, arrangements or plans shall be used by, or disclosed to any person, firm or corporation for any purpose whatsoever without the written permission of NICHOLS, MELBURG and ROSSETTO.

LICENSE STAMPS

REGISTERED PROFESSIONAL ENGINEER
M 33498
EXPIRES 9/30/22
MECHANICAL
STATE OF CALIFORNIA
DATE SIGNED: 10-20-20

CONSULTANT

CAPITAL ENGINEERING CONSULTANTS, INC.
RANCHO CORDOVA, CALIFORNIA
JD - HCUH — PM - DESIGN TEAM
181205.00 — PROJECT NO.

DRAWING STATUS
CONSTRUCTION DOCUMENTS

ISSUE

No.	Date	Description
1	10/22/2020	INITIAL PLAN REVIEW
2	01/22/2021	AGENCY RESUBMITTAL
3	03/22/2021	AGENCY RESUBMITTAL

If drawing is not 30" x 42" it is a reduced print

PROJECT
RESIDENTIAL CENTER, UKIAH: REPLACEMENT OF EXISTING RESIDENTIAL CENTER
440 EAST HILL ROAD
WILLITS, CALIFORNIA 95490
MENDOCINO COUNTY
CALIFORNIA CONSERVATION CORP

Supervisor	Designed	Drawn
		Author

DSA Application No.
02-118630

SHEET TITLE
RECREATION BLDG HVAC ZONE PLAN

DGS Project Number	NMR Project Number
0000000000001826	18-6456

Reference North: NORTH
Sheet Scale: As indicated
Sheet Number: M101R

ISSUE DATE
July 9, 2021

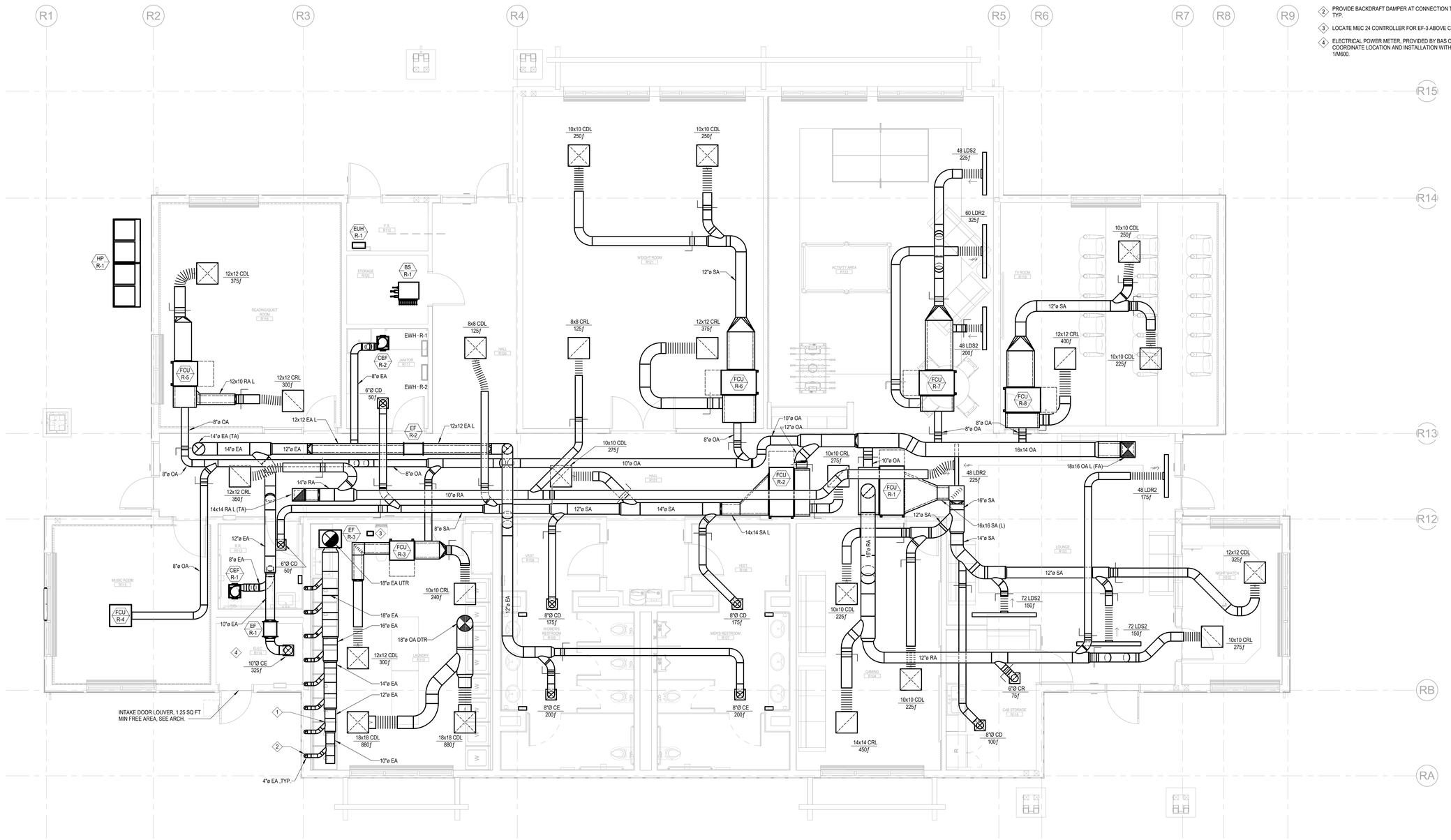

1 M201R RECREATION BLDG HVAC FLOOR PLAN

SCALE: 1/4" = 1'-0"

SHEET NOTES:

1. SEE M001 FOR TABLE OF BRANCH DUCT SIZES TO INDIVIDUAL DIFFUSERS, GRILLES & REGISTERS. SIZE SUPPLY AND RETURN AIR DUCT PLENUMS ENTERING AND LEAVING FAN COILS TO MATCH SIZE OF DUCT CONNECTIONS AT FAN COILS. LINE DUCT AS INDICATED ON PLANS.

KEYNOTES:

1. EXHAUST DUCT BY DIV 23. PROVIDE ACCESS DOOR ON BOTTOM OF EACH STRAIGHT DUCT SECTION FOR CLEANING. EXHAUST DUCT SIZES AND CONFIGURATION IS SHOWN PER "SPEED QUEEN" SDE DRYER INSTALLATION MANUAL. CONTRACTOR SHALL COORDINATE ALL DRYER EXHAUST DUCT WITH DRYER MANUFACTURER'S INSTALLATION REQUIREMENTS AND WITH INSTALLING LAUNDRY EQUIPMENT CONTRACTOR. EXHAUST DUCTWORK FOR THE DRYERS SHALL BE ALUMINUM CONSTRUCTION.
2. PROVIDE BACKDRAFT DAMPER AT CONNECTION TO INDIVIDUAL DRYER, TYP.
3. LOCATE MEC 24 CONTROLLER FOR EF-3 ABOVE CEILING.
4. ELECTRICAL POWER METER, PROVIDED BY BAS CONTRACTOR. COORDINATE LOCATION AND INSTALLATION WITH DIV 26. SEE 2/M604 AND 1/M600.

IDENTIFICATION STAMP
DIV. OF THE STATE ARCHITECT
APP: 02-118630 INC:
REVIEWED FOR
SS ☐ FLS ☐ ACS ☑
DATE: 04/13/2021

OFFICE OF THE STATE FIRE MARSHAL
APPROVED FIRE AND PANIC ONLY
Approval of this plan does not authorize or approve any omission or deviation from applicable regulations. Final approval is subject to field inspection. One set of approved plans shall be available on the project site at all times.
PERMIT NO. 20-N-2332-CP
REVIEWED BY: LEO CATAYLO, OSFM
DATE: 4 / /2021

DGS GENERAL SERVICES
Department of General Services
State of California
Real Estate Services Division
Project Management & Development Branch
707 Third Street, Suite 4-105
West Sacramento, California 95605

NICHOLS MELBURG & ROSSETTO ARCHITECTS + ENGINEERS
300 Knollcrest Drive
Redding, CA. 96002
(530) 222-3300 (530) 222-3538 FAX
http://www.nmrdesign.com

Copyright © 2019
All ideas, designs, arrangements and plans indicated or represented by this drawing are owned by, and the property of, NICHOLS, MELBURG and ROSSETTO and were created, evolved and developed for use on, and in conjunction with, the specified project. None of such ideas, designs, arrangements or plans shall be used by, or disclosed to any person, firm or corporation for any purpose whatsoever without the written permission of NICHOLS, MELBURG and ROSSETTO

LICENSE STAMPS

REGISTERED PROFESSIONAL ENGINEER — KEVIN S. BELL — M 33498 — EXPIRES 9/30/22 — MECHANICAL — STATE OF CALIFORNIA
DATE SIGNED: 10-20-20

CONSULTANT

CAPITAL ENGINEERING CONSULTANTS, INC.
RANCHO CORDOVA, CALIFORNIA
JD - HC/JH — PM - DESIGN TEAM
181205.00 — PROJECT NO.

DRAWING STATUS
CONSTRUCTION DOCUMENTS

ISSUE

No.	Date	Description
1	10/22/2020	INITIAL PLAN REVIEW
2	01/22/2021	AGENCY RESUBMITTAL
3	03/22/2021	AGENCY RESUBMITTAL

If drawing is not 30" x 42" it is a reduced print

PROJECT
RESIDENTIAL CENTER, UKIAH: REPLACEMENT OF EXISTING RESIDENTIAL CENTER
440 EAST HILL ROAD
WILLITS, CALIFORNIA 95490
MENDOCINO COUNTY
CALIFORNIA CONSERVATION CORP

Supervisor	Designed	Drawn
		Author

DSA Application No.
02-118630

SHEET TITLE
RECREATION BLDG HVAC FLOOR PLAN

DGS Project Number: 000000000001826
NMR Project Number: 18-6456

Reference North: NORTH
Sheet Scale: 1/4" = 1'-0"
Sheet Number: M201R

ISSUE DATE
July 9, 2021

Plot Date: 3/19/2021 1:24:11 PM
File Name: L:\Revit Local Files\CEQ_DGS CCC Willits_Rec_MP18_Central_jduval\KTH47.rvt

KEYNOTES:

1. PROVIDE DUCT PLENUM CONNECTION TO LOUVER. SIZED TO MATCH LOUVER DIMENSIONS.
2. MAINTAIN MINIMUM 10' CLEARANCE BETWEEN OUTSIDE AIR INTAKE AND ALL EXHAUST AIR DISCHARGES AND VENT PIPING THROUGH ROOF (VTRs).

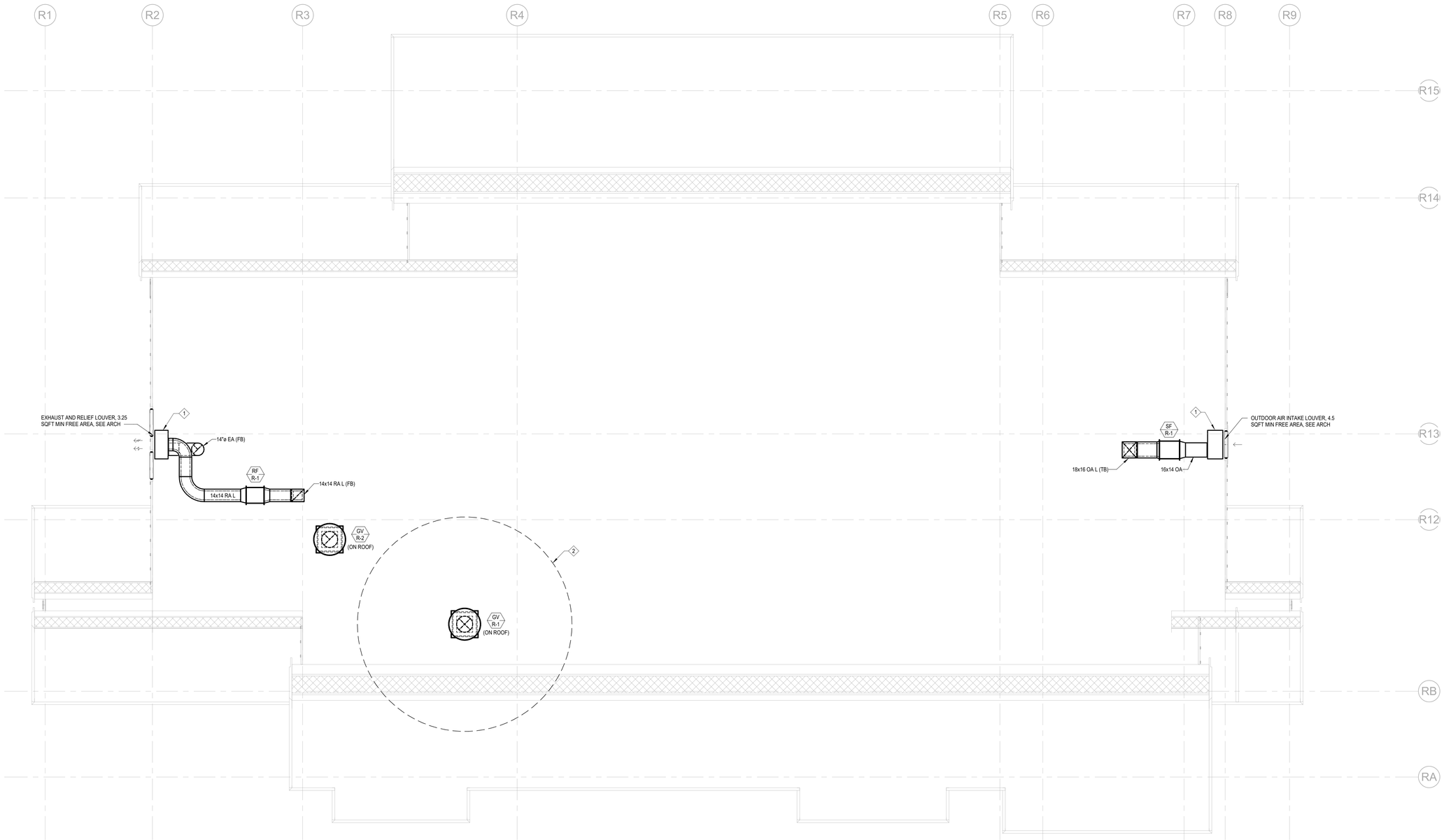

1 M202R RECREATION BLDG HVAC PLENUM PLAN

SCALE: 1/4" = 1'-0"

Plot Date: 3/16/2021 1:24:13 PM
File Name: L:\Revit Local Files\DEC_DGS CCC Willits_Rec_MP18_Central_jdouwKTH47.rvt

IDENTIFICATION STAMP
DIV. OF THE STATE ARCHITECT
APP: 02-118630 INC:
REVIEWED FOR
SS ☐ FLS ☐ ACS ☑
DATE: 04/13/2021

OFFICE OF THE STATE FIRE MARSHAL
APPROVED FIRE AND PANIC ONLY
Approval of this plan does not authorize or approve any omission or deviation from applicable regulations. Final approval is subject to field inspection. One set of approved plans shall be available on the project site at all times.
PERMIT NO. 20-N-2332-CP
REVIEWED BY: LEO CATAYLO, OSFM
DATE: 4 / /2021

DGS GENERAL SERVICES
Department of General Services
State of California
Real Estate Services Division
Project Management & Development Branch
707 Third Street, Suite 4-105
West Sacramento, California 95605

NICHOLS MELBURG & ROSSETTO
ARCHITECTS + ENGINEERS
300 Knollcrest Drive
Redding, CA. 96002
(530) 222-3300 (530) 222-3538 FAX
http://www.nmrdesign.com

Copyright © 2019
All ideas, designs, arrangements and plans indicated or represented by this drawing are owned by, and the property of, NICHOLS, MELBURG and ROSSETTO and were created, evolved and developed for use on, and in conjunction with, the specified project. None of such ideas, designs, arrangements or plans shall be used by, or disclosed to any person, firm or corporation for any purpose whatsoever without the written permission of NICHOLS, MELBURG and ROSSETTO.

LICENSE STAMPS

REGISTERED PROFESSIONAL ENGINEER
M 33498
EXPIRES 9/30/22
MECHANICAL
STATE OF CALIFORNIA
DATE SIGNED: 10-20-20

CONSULTANT

CAPITAL
ENGINEERING CONSULTANTS, INC.
RANCHO CORDOVA, CALIFORNIA
JD - HC/JH — PM - DESIGN TEAM
181205.00 — PROJECT NO.

DRAWING STATUS
CONSTRUCTION DOCUMENTS

ISSUE

No.	Date	Description
1	10/22/2020	INITIAL PLAN REVIEW
2	01/22/2021	AGENCY RESUBMITTAL
3	03/22/2021	AGENCY RESUBMITTAL

If drawing is not 30" x 42" it is a reduced print

PROJECT
RESIDENTIAL CENTER, UKIAH: REPLACEMENT OF EXISTING RESIDENTIAL CENTER
440 EAST HILL ROAD
WILLITS, CALIFORNIA 95490
MENDOCINO COUNTY
CALIFORNIA CONSERVATION CORP

Supervisor	Designed	Drawn
		Author

DSA Application No.
02-118630

SHEET TITLE
RECREATION BLDG HVAC PLENUM PLAN

DGS Project Number	NMR Project Number
000000000001826	18-6456

Reference North: NORTH
Sheet Scale: 1/4" = 1'-0"
Sheet Number: M202R

ISSUE DATE
July 9, 2021

SHEET NOTES:

1. SEE 3/M400 FOR VRF REFRIGERANT PIPING DIAGRAM & SIZES.
2. INDIVIDUAL REFRIGERANT PIPES ARE NOT MODELED. RECTANGULAR SHAPES ON FLOOR PLAN INDICATE PIPE GROUPINGS WITH MULTIPLE REFRIGERANT PIPES ROUTED TOGETHER. SHOWN FOR SPACE COORDINATION AND NOT TO REPRESENT ANY PIPING ENCLOSURE.

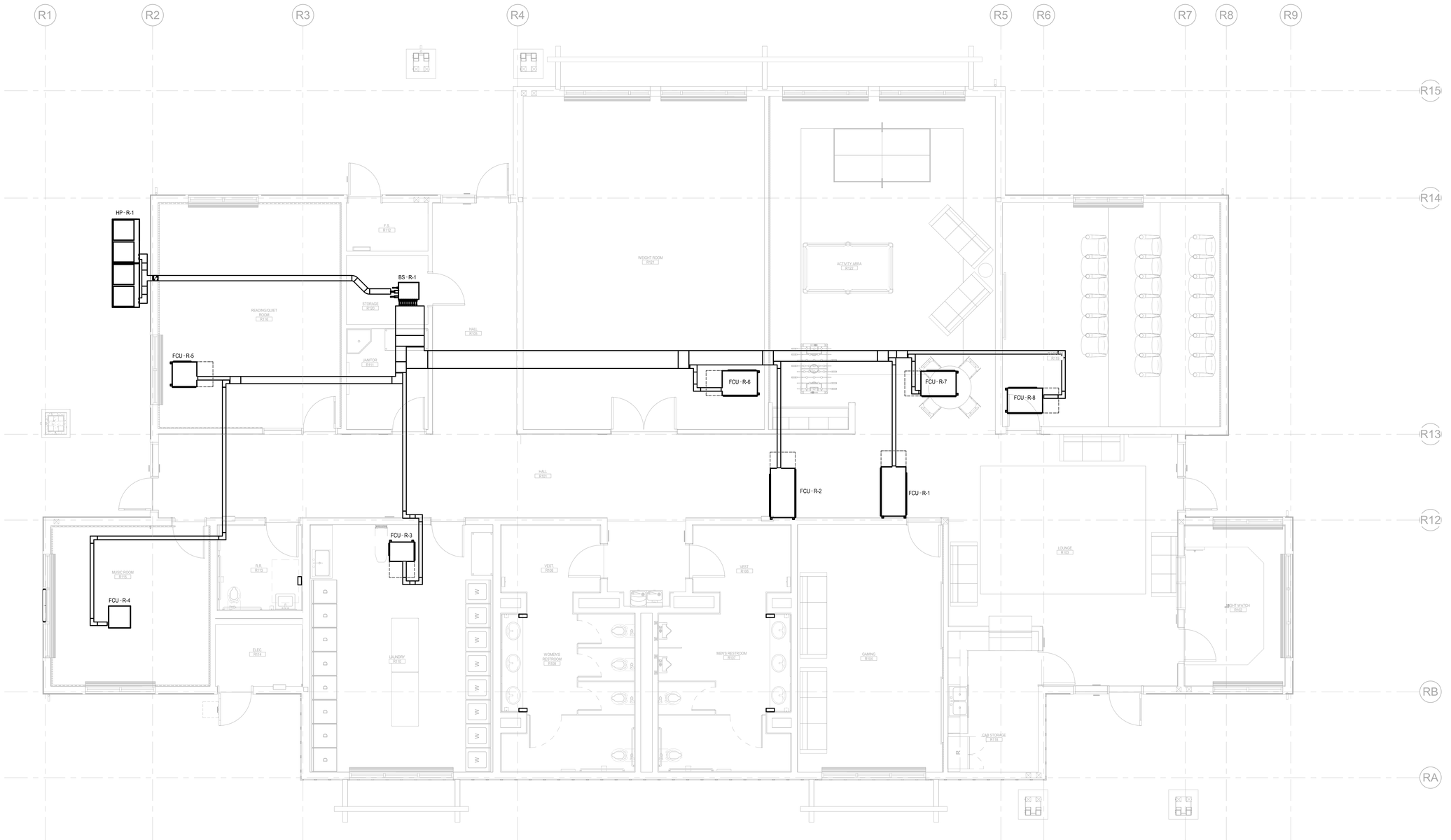

1 M301R RECREATION BLDG HVAC PIPING FLOOR PLAN

SCALE: 1/4" = 1'-0"

Plot Date: 3/19/2021 1:24:17 PM
File Name: J:\Revit Local Files\EDI_DGS CCC Willits_Rec_MP18_Central_jdovak\KTH47.rvt

IDENTIFICATION STAMP
DIV. OF THE STATE ARCHITECT
APP: 02-118630 INC:
REVIEWED FOR
SS ☐ FLS ☐ ACS ☑
DATE: 04/13/2021

OFFICE OF THE STATE FIRE MARSHAL
APPROVED FIRE AND PANIC ONLY
Approval of this plan does not authorize or approve any omission or deviation from applicable regulations. Final approval is subject to field inspection. One set of approved plans shall be available on the project site at all times.
PERMIT NO. 20-N-2332-CP
REVIEWED BY: LEO CATAYLO, OSFM
DATE: 4 / /2021

GENERAL SERVICES
Department of General Services
State of California
Real Estate Services Division
Project Management & Development Branch
707 Third Street, Suite 4-105
West Sacramento, California 95605

NICHOLS MELBURG & ROSSETTO
ARCHITECTS + ENGINEERS
300 Knollcrest Drive
Redding, CA. 96002
(530) 222-3300 (530) 222-3538 FAX
http://www.nmrdesign.com

Copyright © 2019
All ideas, designs, arrangements and plans indicated or represented by this drawing are owned by, and the property of, NICHOLS, MELBURG and ROSSETTO and were created, evolved and developed for use on, and in conjunction with, the specified project. None of such ideas, designs, arrangements or plans shall be used by, or disclosed to any person, firm or corporation for any purpose whatsoever without the written permission of NICHOLS, MELBURG and ROSSETTO

LICENSE STAMPS

REGISTERED PROFESSIONAL ENGINEER — KATHY DAVIS — M 33498 — EXPIRES 9/30/22 — MECHANICAL — STATE OF CALIFORNIA

DATE SIGNED: 10-20-20

CONSULTANT

CAPITAL
ENGINEERING CONSULTANTS, INC.
RANCHO CORDOVA, CALIFORNIA
JD - HCJH — PM - DESIGN TEAM
181205.00 — PROJECT NO.

DRAWING STATUS
CONSTRUCTION DOCUMENTS

ISSUE

No.	Date	Description
1	10/22/2020	INITIAL PLAN REVIEW
2	01/22/2021	AGENCY RESUBMITTAL
3	03/22/2021	AGENCY RESUBMITTAL

If drawing is not 30" x 42" it is a reduced print

PROJECT
RESIDENTIAL CENTER, UKIAH: REPLACEMENT OF EXISTING RESIDENTIAL CENTER
440 EAST HILL ROAD
WILLITS, CALIFORNIA 95490
MENDOCINO COUNTY
CALIFORNIA CONSERVATION CORP

Supervisor	Designed	Drawn
		Author

DSA Application No.
02-118630

SHEET TITLE
RECREATION BLDG HVAC PIPING FLOOR PLAN

DGS Project Number: 0000000000001826
NMR Project Number: 18-6456

Reference North: NORTH
Sheet Scale: 1/4" = 1'-0"
Sheet Number: M301R

ISSUE DATE
July 9, 2021

STATE OF CALIFORNIA

Mechanical Systems

NRCC-MCH-E — CALIFORNIA ENERGY COMMISSION

CERTIFICATE OF COMPLIANCE	**NRCC-MCH-E**
This document is used to demonstrate compliance for mechanical systems that are within the scope of the permit application and are demonstrating compliance using the prescriptive path outlined in §140.4, or §141.0(b)2 for alterations .	
Project Name: CCC Willits - Recreation Building	**Report Page:** (Page 1 of 10)
Project Address:	**Date Prepared:** 9/3/2020

A. GENERAL INFORMATION

01	Project Location (city)	Willits	04	Total Conditioned Floor Area	5246
02	Climate Zone	2	05	Total Unconditioned Floor Area	53
03	Occupancy Types Within Project:		06	# of Stories (Habitable Above Grade)	1
☐	Office (B)	☐ Retail (M)	☐	Non-refrigerated Warehouse (S)	
☐	Hotel/ Motel Guest Rooms (R-1)	☐ School (E)	☐	Healthcare Facility (H)	
☐	High-Rise Residential (R-2/R-3)	☐ Relocatable Class Bldg (E)	☒	Other (write in)	See Table J

B. PROJECT SCOPE

This table Includes mechanical systems or components that are within the scope of the permit application and are demonstrating compliance using the prescriptive path outlined in §140.4, or §141.0(b)2 for alterations .

01	02	03
Air System(s)	Wet System Components	Dry System Components
☒ Heating Air System	☐ Water Economizer	☐ Air Economizer
☒ Cooling Air System	☐ Pumps	☐ Electric Resistance Heat
Mechanical Controls	☐ System Piping	☒ Fan Systems
☒ Mechanical Controls	☐ Cooling Towers	☐ Ductwork
	☐ Chillers	☒ Ventilation
	☐ Boilers	☐ Zonal Systems/ Terminal Boxes

STATE OF CALIFORNIA

Mechanical Systems

NRCC-MCH-E — CALIFORNIA ENERGY COMMISSION

CERTIFICATE OF COMPLIANCE	**NRCC-MCH-E**
Project Name: CCC Willits - Recreation Building	**Report Page:** (Page 2 of 10)
Project Address:	**Date Prepared:** 9/3/2020

C. COMPLIANCE RESULTS

Table C will indicate if the project data input into the compliance document is compliant with mechanical requirements. This table is not editable by the user. If this table says "DOES NOT COMPLY" or "COMPLIES with Exceptional Conditions" refer to Table D., or the table indicated as not compliant for guidance.

01		02		03		04		05		06		07		08	09
System Summary §110.1, §110.2, §140.4	AND	Pumps §140.4(k)	AND	Fans/ Economizers §140.4(c), §140.4(e)	AND	System Controls §110.2, §120.2, §140.4(f)	AND	Ventilation §120.1	AND	Terminal Box Controls §140.4(d)	AND	Distribution §120.3, §140.4(l)	AND	Cooling Towers §110.2(e)2	Compliance Results
(See Table F)		(See Table G)		(See Table H)		(See Table I)		(See Table J)		(See Table K)		(See Table L)		(See Table M)	
Yes	AND		AND	Yes	AND	Yes	AND	Yes	AND		AND		AND		COMPLIES
Mandatory Measures Compliance (See Table Q for Details)										COMPLIES					

D. EXCEPTIONAL CONDITIONS

This table is auto-filled with uneditable comments because of selections made or data entered in tables throughout the form.

E. ADDITIONAL REMARKS

This table includes remarks made by the permit applicant to the Authority Having Jurisdiction.

STATE OF CALIFORNIA

Mechanical Systems

NRCC-MCH-E — CALIFORNIA ENERGY COMMISSION

CERTIFICATE OF COMPLIANCE	**NRCC-MCH-E**
Project Name: CCC Willits - Recreation Building	**Report Page:** (Page 3 of 10)
Project Address:	**Date Prepared:** 9/3/2020

F. HVAC SYSTEM SUMMARY (DRY & WET SYSTEMS)

This table is used to demonstrate compliance for mechanical equipment with mandatory requirements found in §110.1 and §110.2(a) and prescriptive requirements found in §140.4(a), §140.4(b) and §140.4(k) or §141.0(b)2 for alterations.

Dry System Equipment Sizing (includes air conditioners, condensers, heat pumps, VRF, furnaces and unit heaters)

01	02	03	04	05	06	07	08	09	10	11
Name or Item Tag	Equipment Category per Tables 110.2	Equipment Type per Tables 110.2 & Title 20	Smallest Size Available[1] §140.4(a)	Equipment Sizing per Mechanical Schedule (Btu/h) §140.4 (a&b)						
				Heating Output[2,3]			Cooling Output[2,3]		Load Calculations[3,4]	
				Per Design (kBtu/h)	Rated (kBtu/h)	Supp. Heating Output (kBtu/h)	Sensible Per Design (kBtu/h)	Rated (kBtu/h)	Total Heating Load	Total Sensible Cooling Load
HP-R-1	Variable Refrigerant Flow	VRF heat pump, air cooled	Yes	142251	178756	0	192051	194640	263722	182149

[1]*FOOTNOTES: Equipment shall be the smallest size, within the available options of the desired equipment line, necessary to meet the design heating and cooling loads of the building per §140.4(a). Healthcare facilities are excepted.*

[2]*It is common practice to show rated output capacity on the equipment schedule. Sensible cooling output comes from specification sheet tables.*

[3] *If equipment is heating only, leave cooling output and load blank. If equipment is cooling only, leave heating output and load blank.*

[4] *Authority Having Jurisdiction may ask for load calculations used for compliance per §140.4(b).*

Dry System Equipment Efficiency (other than Package Terminal Air Conditioners (PTAC) and Package Terminal Heat Pumps (PTHP))

01	02	03	04	05	06	07	08	09
Name or Item Tag	Size Category (Btu/h)	Heating Mode				Cooling Mode		
		Rating Condition (°F)	Efficiency Unit	Minimum Efficiency Required per Tables 110.2 / Title 20	Design Efficiency	Efficiency Unit	Minimum Efficiency Required per Tables 110.2 / Title 20	Design Efficiency
HP-R-1	135,000 and 240,000	47 Fdb/ 43 Fwb OSA	COP	3.2	3.7	EER IEER	10.6 13.9	12.6 20.4

G. PUMPS

This section does not apply to this project.

STATE OF CALIFORNIA

Mechanical Systems

NRCC-MCH-E — CALIFORNIA ENERGY COMMISSION

CERTIFICATE OF COMPLIANCE	**NRCC-MCH-E**
Project Name: CCC Willits - Recreation Building	**Report Page:** (Page 4 of 10)
Project Address:	**Date Prepared:** 9/3/2020

H. FAN SYSTEMS & AIR ECONOMIZERS

This table is used to demonstrate compliance with prescriptive requirements found in §140.4(c), §140.4(e) and §140.4(m) for fan systems. Fan systems serving healthcare facilities, or those serving only process loads, are exempt from these requirements and do not need to be included in Table H.

System Name:	HP-R-1	Economizer:[1]	Differential Temperature	Economizer Controls:	Designed per and (m)	System Fan Type:	Fixed Flow
01	02	03	04	05	06	07	08
Fan Name or Item Tag	Fan Function	Qty	Maximum Design Supply Airflow (CFM)	HP Unit[2]	Design HP	Fan Power Pressure Drop Adjustment - Table 140.4-B	
						Device	Design Airflow through Device (CFM)
VRF	Other (Transfer, VAV box)	1	6760	BHP	0.05		
VRF	Other (Transfer, VAV box)	1	0	BHP	0.05		
EF	Exhaust	1	0	BHP	0.13		
VRF	Other (Transfer, VAV box)	1	0	BHP	0.01		
EF	Exhaust	1	0	BHP	0.74		
VRF	Other (Transfer, VAV box)	1	0	BHP	0.05		
VRF	Other (Transfer, VAV box)	1	0	BHP	0.02		
VRF	Other (Transfer, VAV box)	1	0	BHP	0.03		
VRF	Other (Transfer, VAV box)	1	0	BHP	0.02		
VRF	Other (Transfer, VAV box)	1	0	BHP	0.02		
Total System Design Supply Airflow (CFM):			6760	Total System Design (B)HP:	1.13	Maximum System Fan Power (B)HP:	0

[1] *FOOTNOTES: Computer room economizers must meet requirements of §140.9(a) and will be documented on the NRCC-PRC-E document.*

[2] *If total filter pressure drop (SPa) is greater than 1 in WC, or 245 Pascal then enter it and total fan pressure drop across the fan (SPf) for system.*

STATE OF CALIFORNIA

Mechanical Systems

NRCC-MCH-E — CALIFORNIA ENERGY COMMISSION

CERTIFICATE OF COMPLIANCE	**NRCC-MCH-E**
Project Name: CCC Willits - Recreation Building	**Report Page:** (Page 5 of 10)
Project Address:	**Date Prepared:** 9/3/2020

I. SYSTEM CONTROLS

This table is used to demonstrate compliance with mandatory controls in §110.2 and §120.2 and prescriptive controls in §140.4(f) and (n) or requirements in §141.0(b)2E for altered space conditioning systems.

01	02	03	04	05	06	07	08	09
System Name	System Zoning	Conditioned Floor Area Being Served (ft^2)	Thermostats §110.2(b) & (c)[1], §120.2(a)or §141.0(b)2E	Shut-Off Controls §120.2(e)	Isolation Zone Controls §120.2(g)	Demand Response §120.2(b)	Supply Air Temp. Reset §140.4(f)	Window Interlocks per §140.4(n)
HP-R-1	Multi-zone w/ DDC to zone	<= 25,000 ft^2	Setback	Auto Timer Switch	4 Hour Timer	EMCS	Included	Provided

[1]*FOOTNOTES: Gravity gas wall heaters, gravity floor heaters, gravity room heaters, non-central electric heaters, fireplaces or decorative gas appliances, wood stoves are not required to have setback thermostats.*

*Notes: Controls with a * require a note in the space below explaining how compliance is achieved. EX: system 1: SA Temp Reset: Exempt because zones compliant with §140.4(d) ; EXCEPTION 1 to §140.4(f)

J. VENTILATION AND INDOOR AIR QUALITY

This table is used to demonstrate compliance with mandatory ventilation requirements in §120.1 and §120.2(e)3B for all nonresidential, high-rise residential and hotel/motel occupancies. For alterations, only ventialtion systems being altered within the scope of the permit application need to be documented in this table. In lieu of this table, the required outdoor ventilation rates and airflows may be shown on the plans or the calculations can be presented in a spreadsheet.

01	☐	Check the box if the project is showing ventilation calculations on the plans, or attaching the calculations instead of completing this table.
02	☐	Check this box if the project included new or altered high-rise residential dwelling units.
03	☐	Check the box if the project is using natural ventilation in any nonresidential or hotel/motel spaces to meet required ventilation rates per §120.1(c)2.

Nonresidential and Hotel/ Motel Ventilation Systems

04		05		06		07
System Name	HP-R-1	System Design OA CFM Airflow[1]	623.7	System Design Transfer Air CFM	0	Air Filtration per §120.1(c) and §141.0(b)2 [2]
						Provided per §120.1(c) (NR and Hotel/Motel))
08	09	10 / 11	12	13 / 14	15	16

STATE OF CALIFORNIA

Mechanical Systems

NRCC-MCH-E — CALIFORNIA ENERGY COMMISSION

CERTIFICATE OF COMPLIANCE	**NRCC-MCH-E**
Project Name: CCC Willits - Recreation Building	**Report Page:** (Page 6 of 10)
Project Address:	**Date Prepared:** 9/3/2020

J. VENTILATION AND INDOOR AIR QUALITY

Space Name ot item Tag	Mechanical Ventilation Required per §120.1(c)3 [3]					Exh. Vent per §120.1(c)4		DCV or Sensor Controls per §120.1(d)3, §120.1(d)5, and §120.1(e)3 [6]	
	Occupancy Type[4]	Conditioned Floor Area (ft^2)	# of Shower heads/ toilets	# of people[5]	Required Min OA CFM	Required Min CFM	Provided per Design CFM		
FCU-R-1	All others	1027			154	0	0	DCV	NA: Not required per §120.1(d)3
								Occ Sensor	
FCU-R-2	Toilet, public	1483			0	0	550	DCV	NA: Not required per §120.1(d)3
								Occ Sensor	
FCU-R-3	Coin-operated Laundry	395			118.5	0	1760	DCV	NA: Not required per §120.1(d)3
								Occ Sensor	
FCU-R-4	All others	221			33.2	0	0	DCV	NA: Not required per §120.1(d)3
								Occ Sensor	
FCU-R-5	All others	356			53.4	0	0	DCV	NA: Not required per §120.1(d)3
								Occ Sensor	
FCU-R-6	Health club/ weight rooms	695			104.2	0	0	DCV	NA: Not required per §120.1(d)3
								Occ Sensor	
FCU-R-7	All others	641			96.1	0	0	DCV	NA: Not required per §120.1(d)3
								Occ Sensor	
FCU-R-8	All others	428			64.2	0	0	DCV	NA: Not required per §120.1(d)3
								Occ Sensor	

[1] *FOOTNOTES: System CFM should include both mechanical and natural ventilation for the zone/system*

STATE OF CALIFORNIA

Mechanical Systems

NRCC-MCH-E — CALIFORNIA ENERGY COMMISSION

CERTIFICATE OF COMPLIANCE	**NRCC-MCH-E**
Project Name: CCC Willits - Recreation Building	**Report Page:** (Page 7 of 10)
Project Address:	**Date Prepared:** 9/3/2020

J. VENTILATION AND INDOOR AIR QUALITY

[2] *Air filtration requirements apply to the following three system types per §120.1(c)1A : space conditioning systems utilizing ducts to supply air to occupiable space; supply-only ventilation systems providing outside air to occupiable space; supply side of balanced ventilation systems including heat recovery and energy recovery ventilation systems providing outside air to occupiable space.*

[3] *Uniform Mechanical Code may have more stringent ventilation requirements; the most stringent code requirement takes precedence.*

[4] *See Standards Tables 120.1-A and 120.1-B.*

[5] *For lecture halls with fixed seating, the expected number of occupants shall be shall be determined in accordance with the California Building Code.*

[6] *§120.2(e)3 requires systems serving rooms that are required by §130.1(c) to have lighting occupancy sensing controls to also have occupancy sensing zone controls for ventilation. Examples of spaces which require lighting occupancy sensors include offices 250ft² or smaller, multipurpose rooms less than 1,000 ft², classrooms, conference rooms, restrooms, aisles and open areas in warehouses, library book stack aisles, corridors, stairwells, parking garages, and loading and unloading zones, unless excepted by §130.1(c).*

K. TERMINAL BOX CONTROLS

This section does not apply to this project.

L. DISTRIBUTION (DUCTWORK and PIPING)

This section does not apply to this project.

M. COOLING TOWERS

This section does not apply to this project.

N. DECLARATION OF REQUIRED CERTIFICATES OF INSTALLATION

Selections have been made based on information provided in previous tables of this document. If any selection needs to be changed, please explain why in Table E Additional Remarks. These documents must be provided to the building inspector during construction and can be found online at https://www.energy.ca.gov/title24/2019standards/2019_compliance_documents/Nonresidential_Documents/NRCI/

Yes	No	Form/Title	Field Inspector Pass	Field Inspector Fail
●	○	NRCI-MCH-01-E - Must be submitted for all buildings	☐	☐

STATE OF CALIFORNIA

Mechanical Systems

NRCC-MCH-E — CALIFORNIA ENERGY COMMISSION

CERTIFICATE OF COMPLIANCE	**NRCC-MCH-E**
Project Name: CCC Willits - Recreation Building	**Report Page:** (Page 8 of 10)
Project Address:	**Date Prepared:** 9/3/2020

O. DECLARATION OF REQUIRED CERTIFICATES OF ACCEPTANCE

Selections have been made based on information provided in previous tables of this document. If any selection needs to be changed, please explain why in Table E Additional Remarks. These documents must be provided to the building inspector during construction and can be found online at https://www.energy.ca.gov/title24/2019standards/2019_compliance_documents/Nonresidential_Documents/NRCA/

Yes	No	Form/Title	Field Inspector Pass	Field Inspector Fail
●	○	NRCA-MCH-02-A - Outdoor Air must be submitted for all newly installed HVAC units. Note: MCH-02-A can be performed in conjunction with MCH-07-A Supply Fan VFD Acceptance (if applicable) since testing activities overlap.	☐	☐
○	●	NRCA-MCH-03-A - Constant Volume Single Zone HVAC NOTE: This form does not automatically move to 'Yes'. If Constant Volume Single Zone HVAC Systems are included in the scope, permit applicant should move this form to "Yes".	☐	☐
○	●	NRCA-MCH-04-A - Air Distribution Duct Leakage	☐	☐
○	●	NRCA-MCH-05-A - Air Economizer Controls	☐	☐
○	●	NRCA-MCH-06-A Demand Control Ventilation Systems must be submitted for all systems required to employ demand controlled ventilation (refer to §120.1(c)3) can vary outside ventilation flow rates based on maintaining interior carbon dioxide (CO_2) concentration setpoints.	☐	☐
○	●	NRCA-MCH-07-A Supply Fan Variable Flow Controls	☐	☐
○	●	NRCA-MCH-08-A Valve Leakage Test	☐	☐
○	●	NRCA-MCH-09-A Supply Water Temperature Reset Controls	☐	☐
○	●	NRCA-MCH-10-A Hydronic System Variable Flow Controls	☐	☐
●	○	NRCA-MCH-11-A Automatic Demand Shed Controls	☐	☐
○	●	NRCA-MCH-12-A FDD for Packaged Direct Expansion Units	☐	☐
○	●	NRCA-MCH-13-A Automatic FDD for Air Handling Units and Zone Terminal Units Acceptance	☐	☐
○	●	NRCA-MCH-14-A Distributed Energy Storage DX AC Systems Acceptance NOTE: This form does not automatically move to "Yes". If Distributed Energy System DX AC Systems are included in teh scope permit applicant should move this form to 'Yes".	☐	☐
○	●	NRCA-MCH-15-A Thermal Energy Storage (TES) System Acceptance NOTE: This form does not automatically move to "Yes". If Chilled water Storage, Ice-on-Coil Internal Melt, Ice-on-Coil External melt, Ice Harvester, Brine, Ice-Slurry, Eutecti Salt, Clathrate Hydrate Slurry (CHS), Cryogenic or Encapsulated (Ice Ball) Systems are included in the scope, permit applicant should move this form to 'Yes".	☐	☐
○	●	NRCA-MCH-16-A Supply Air Temperature Reset Controls	☐	☐
○	●	NRCA-MCH-17-A Condenser Water Temperature Reset Controls	☐	☐
○	●	NRCA-MCH-18-A Energy Management Control Systems	☐	☐

STATE OF CALIFORNIA

Mechanical Systems

NRCC-MCH-E — CALIFORNIA ENERGY COMMISSION

CERTIFICATE OF COMPLIANCE	**NRCC-MCH-E**
Project Name: CCC Willits - Recreation Building	**Report Page:** (Page 9 of 10)
Project Address:	**Date Prepared:** 9/3/2020

O. DECLARATION OF REQUIRED CERTIFICATES OF ACCEPTANCE

○	●	NRCA-MCH-19-A Occupancy Sensor Controls	☐	☐
○	●	NRCA-MCH-20 Multi-Family Ventilation	☐	☐
○	●	NRCA-MCH-21 Multi-Family Envelope Leakage	☐	☐

P. DECLARATION OF REQUIRED CERTIFICATES OF VERIFICATION

Selections have been made based on information provided in previous tables of this document. If any selection needs to be changed, please explain why in Table E Additional Remarks. These documents must be completed by a HERS Rater and provided to the building inspector during construction. The finsl documents must be creted by a HERS Providrs registry, but drafts can be found online at https://www.energy.ca.gov/title24/2019standards/2019_compliance_documents/Nonresidential_Documents/NRCV/

Yes	No	Form/Title	Field Inspector Pass	Field Inspector Fail
○	●	NRCV-MCH-04-H Duct Leakaage Test *NOTE: Must be completed by a HERS Rater*	☐	☐
○	●	NRCV-MCH-24 Enclosure Air Leakaage Worksheet *NOTE: Must be completed by a HERS Rater*	☐	☐
○	●	NRCV-MCH-27 High-rise Resdential *NOTE: Must be completed by a HERS Rater*	☐	☐
○	●	NRCV-MCH-32 Local Mechanical Exhaust *NOTE: Must be completed by a HERS Rater*	☐	☐

Q. MANDATORY MEASURES DOCUMENTATION LOCATION

This table is used to indicate where mandatory measures are documented in the plan set or construction documentation.

01		02
Compliance with Mandatory Measures documented through MCH Mandatory Measures Note Block[1]	Yes	Plan sheet or construction document location
		M-Sheets

IDENTIFICATION STAMP
DIV. OF THE STATE ARCHITECT
APP: 02-118630 INC:
REVIEWED FOR
SS ☐ FLS ☐ ACS ☑
DATE: 04/13/2021

OFFICE OF THE STATE FIRE MARSHAL
APPROVED FIRE AND PANIC ONLY
Approval of this plan does not authorize or approve any omission or deviation from applicable regulations. Final approval is subject to field inspection. One set of approved plans shall be available on the project site at all times.
PERMIT NO.: 20-N-2332-CP
REVIEWED BY: LITO CATAYLO, OSFM
DATE: 4/1/2021

GENERAL SERVICES
Department of General Services
State of California
Real Estate Services Division
Project Management & Development Branch
707 Third Street, Suite 4-105
West Sacramento, California 95605

NICHOLS MELBURG & ROSSETTO
ARCHITECTS + ENGINEERS
300 Knollcrest Drive
Redding, CA. 96002
(530) 222-3300 (530) 222-3538 FAX
http://www.nmrdesign.com

Copyright © 2019
All ideas, designs, arrangements and plans indicated or represented by this drawing are owned by, and the property of, NICHOLS, MELBURG and ROSSETTO and were created, evolved and developed for use on, and in conjunction with, the specified project. None of such ideas, designs, arrangements or plans shall be used by, or disclosed to any person, firm or corporation for any purpose whatsoever without the written permission of NICHOLS, MELBURG and ROSSETTO.

LICENSE STAMPS
REGISTERED PROFESSIONAL ENGINEER — M 33498 — EXPIRES 9/30/22 — MECHANICAL — STATE OF CALIFORNIA
DATE SIGNED: 10-20-20

CONSULTANT
CAPITAL ENGINEERING CONSULTANTS, INC.
RANCHO CORDOVA, CALIFORNIA
JD - HC/JH — PM - DESIGN TEAM
181205.00 — PROJECT NO.

DRAWING STATUS
CONSTRUCTION DOCUMENTS

ISSUE

No.	Date	Description
1	10/22/2020	INITIAL PLAN REVIEW
2	01/22/2021	AGENCY RESUBMITTAL
3	03/22/2021	AGENCY RESUBMITTAL

If drawing is not 30" x 42" it is a reduced print

PROJECT
RESIDENTIAL CENTER, UKIAH: REPLACEMENT OF EXISTING RESIDENTIAL CENTER
440 EAST HILL ROAD
WILLITS, CALIFORNIA 95490
MENDOCINO COUNTY
CALIFORNIA CONSERVATION CORP

Supervisor | Designed | Drawn: Author

DSA Application No.
02-118630

SHEET TITLE
RECREATION BLDG TITLE 24 COMPLIANCE

DGS Project Number: 000000000001826 — NMR Project Number: 18-6456

Reference North — NORTH
Sheet Scale
Sheet Number: M401R

ISSUE DATE
July 9, 2021

Plot Date: 3/19/2021 1:24:18 PM
File Name: L:\Revit Local Files\CECI_DGS CCC Willits_Rec_MP18_Central_jduvalKTH47.rvt

STATE OF CALIFORNIA

Mechanical Systems

NRCC-MCH-E — CALIFORNIA ENERGY COMMISSION

CERTIFICATE OF COMPLIANCE		NRCC-MCH-E
Project Name:	CCC Willits - Recreation Building	Report Page: (Page 10 of 10)
Project Address:		Date Prepared: 9/3/2020

DOCUMENTATION AUTHOR'S DECLARATION STATEMENT

I certify that this Certificate of Compliance documentation is accurate and complete.

Documentation Author Name: Jessica Hughey	Documentation Author Signature:
Company: Capital Engineering Consultants Inc.	Signature Date: 10/20/2020
Address: 11020 Sun Center Dr. Suite 100	CEA/ HERS Certification Identification (if applicable):
City/State/Zip: Rancho Cordova CA 95670	Phone: (916) 850-3500

RESPONSIBLE PERSON'S DECLARATION STATEMENT

I certify the following under penalty of perjury, under the laws of the State of California:

1. The information provided on this Certificate of Compliance is true and correct.
2. I am eligible under Division 3 of the Business and Professions Code to accept responsibility for the building design or system design identified on this Certificate of Compliance (responsible designer)
3. The energy features and performance specifications, materials, components, and manufactured devices for the building design or system design identified on this Certificate of Compliance conform to the requirements of Title 24, Part 1 and Part 6 of the California Code of Regulations.
4. The building design features or system design features identified on this Certificate of Compliance are consistent with the information provided on other applicable compliance documents, worksheets, calculations, plans and specifications submitted to the enforcement agency for approval with this building permit application.
5. I will ensure that a completed signed copy of this Certificate of Compliance shall be made available with the building permit(s) issued for the building, and made available to the enforcement agency for all applicable inspections. I understand that a completed signed copy of this Certificate of Compliance is required to be included with the documentation the builder provides to the building owner at occupancy.

Responsible Designer Name: Kevin D. Stillman	Responsible Designer Signature:
Company: Capital Engineering Consultants, Inc.	Date Signed: 2020-09-03
Address: 11020 Sun Center Dr. Suite 100	License: M 33498
City/State/Zip: Rancho Cordova CA 95670	Phone:

STATE OF CALIFORNIA

Domestic Water Heating System

NRCC-PLB-E — CALIFORNIA ENERGY COMMISSION

CERTIFICATE OF COMPLIANCE		NRCC-PLB-E
Project Name:	CCC Willits - Recreation Building	Report Page: (Page 1 of 7)
Project Address:		Date Prepared: 9/3/2020

This document is used to demonstrate compliance for nonresidential occupancies with requirements in §110.1, §110.3, §120.3, and §140.5, and with requirements in §141.0 for additions and alterations, for domestic water heating scopes using the prescriptive path. For high-rise residential and hotel/motel occupancies compliance is demonstrated with requirements in §110.1, §110.3, §120.3, §150.0 and §150.1(c)8, and with requirements §150.2 for additions.

A. GENERAL INFORMATION

01	Project Location (city)	Willits	02	Climate Zone	2
03	Occupancy Types Within Project (select all that apply):				
☒ Nonresidential	☐ High-Rise Residential	☐ Hotel/Motel			
☐ State Building	☐ Healthcare Facility	☐ Other (Write In)			

B. PROJECT SCOPE

This table includes domestic water heating systems that are within the scope of the permit application and are demonstrating compliance using the prescriptive paths outlined in §140.5, §150.1(c)8, and §141.0(a), or §141.0(b)2N for additions or alterations. Solar water heating systems are documented on the NRCC-SRA compliance document. Combined hydronic water heating systems are documented on the NRCC-MCH compliance document.

01	02	03		
My project consists of (check all that apply):	System Type[1,2]	System Components		
☒ New system (DHW system being installed for the first time in newly constructed building)	Individual System (serving nonresidential spaces)	☒ Equipment	☒ Distribution	☒ Controls
☐ System Alteration (equipment, distribution or controls)		☐ Equipment	☐ Distribution	☐ Controls

[1] *FOOTNOTES: Point of use water heaters, or other non-central systems used to serve nonresidential spaces, are considered individual systems.*

[2] *Dwelling units refers to hotel/motel guest rooms and units in a high-rise residential occupancy.*

STATE OF CALIFORNIA

Domestic Water Heating System

NRCC-PLB-E — CALIFORNIA ENERGY COMMISSION

CERTIFICATE OF COMPLIANCE		NRCC-PLB-E
Project Name:	CCC Willits - Recreation Building	Report Page: (Page 2 of 7)
Project Address:		Date Prepared: 9/3/2020

C. COMPLIANCE RESULTS

Table C will indicate if the project data input into the compliance document is compliant with water heating requirements. If this table says "DOES NOT COMPLY" or "COMPLIES with Exceptional Conditions" refer to Table D, or the table indicated as not compliant for guidance.

01	02	03	04
Domestic Hot Water Equipment	Distribution Systems	Controls	Compliance Results
Table F	Table G	Table H	
Yes	Yes	Yes	COMPLIES

D. EXCEPTIONAL CONDITIONS

This table is auto-filled with uneditable comments because of selections made or data entered in tables throughout the form.

E. ADDITIONAL REMARKS

This table is includes remarks made by the permit applicant to the Authority Having Jurisdiction.

STATE OF CALIFORNIA

Domestic Water Heating System

NRCC-PLB-E — CALIFORNIA ENERGY COMMISSION

CERTIFICATE OF COMPLIANCE		NRCC-PLB-E
Project Name:	CCC Willits - Recreation Building	Report Page: (Page 3 of 7)
Project Address:		Date Prepared: 9/3/2020

F. DOMESTIC HOT WATER EQUIPMENT

This table is used to demonstrate compliance with mandatory equipment requirements in §110.1 and §110.3. For high-rise residential and hotel/motel occupancies, compliance with prescriptive requirements in §150.1(c)8 must also be demonstrated and with §150.2 for addition and alteration scopes.

Equipment Schedule: Individual Systems

01	02	03	04	05	06
Name or Item Tag	Equipment Type	Volume (gal)	Max GPM/ First Hour Rating (FHR)	Rated Uniform Energy Factor (UEF)	Minimum Required Uniform Energy Factor (UEF)[1]
Instantaneous Electric	Electric Storage	<=2	FHR >=75	0.98	0

[1] *FOOTNOTE: Compliant equipment may be found in the Modernized Appliance Efficiency Database System (MAEDBS) on the Energy Commission website: https://cacertappliances.energy.ca.gov/Pages/Search/AdvancedSearch.aspx*

Water Heating Equipment All Occupancies

	Yes	No	Not Applicable	Requirement
18	☐	☐	☒	Unfired storage tank insulation shall have Internal + External >=R-16 OR External >=R-12. Label required per §110.3(c)3
19	☐	☐	☒	New state buildings 60% of energy for service water heating from site solar energy or recovered energy per §110.3(c)5
20	☐	☐	☒	Isolation valves for instantaneous water heater with input rating <6.8 kBTUH or 2 kW has been specified per §110.3(c)6

STATE OF CALIFORNIA

Domestic Water Heating System

NRCC-PLB-E — CALIFORNIA ENERGY COMMISSION

CERTIFICATE OF COMPLIANCE		NRCC-PLB-E
Project Name:	CCC Willits - Recreation Building	Report Page: (Page 4 of 7)
Project Address:		Date Prepared: 9/3/2020

G. DOMESTIC HOT WATER DISTRIBUTION SYSTEM

This table is used to demonstrate compliance for nonresidential occupancies with distribution requirements in §120.3 and §140.5. For high-rise residential and hotel/motel occupancies, compliance is demonstrated with requirements §110.3(c), §120.3, §150.0, §150.1

Mandatory Pipe Insulation All Occupancies

12	☒	For systems serving nonresidential spaces, pipe insulation for the following applications is specified to comply with Table 120.3-A (see below) per §120.3 : • Recirculating system piping, including supply and return piping of the water heater • The first 8 ft of hot and cold outlet piping, including between storage tank and heat trap, for a nonrecirculating storage system • Pipes that are externally heated
13	☒	Insulation shall be protected from damage, including that due to sunlight, moisture, equipment maintenance, and wind. Insulation exposed to weather shall be installed with a cover suitable for outdoor service per §120.3(b) and §150.0(j)3

TABLE 120.3-A PIPE INSULATION THICKNESS

Fluid Temperature Range (°F)	Conductivity Range (Btu-in per hour per ft² per °F)	Insulation Mean Rating Temp (°F)	Nominal Pipe Diameter (in)		
			< 1	1 to < 1.5	1.5 to < 4
			Minimum Insulation Required		
105-140	0.22 - 0.28	100	1.0 in or R-7.7	1.5 in or R-12.5	1.5 in or R-11

STATE OF CALIFORNIA

Domestic Water Heating System

NRCC-PLB-E — CALIFORNIA ENERGY COMMISSION

CERTIFICATE OF COMPLIANCE		NRCC-PLB-E
Project Name:	CCC Willits - Recreation Building	Report Page: (Page 5 of 7)
Project Address:		Date Prepared: 9/3/2020

H. DOMESTIC HOT WATER CONTROLS

This table is used to demonstrate compliance with control requirements in §110.3 for all occupancies. For high-rise residential and hotel/motel occupancies, compliance is also demonstrated with requirements in §150.1(c)8.

	Yes	No	Not Applicable	Requirement
01	☒	☐	☐	Construction documents require manufacturer certification that service water-heating systems are equipped with automatic temperature controls capable of adjusting temperature settings per §110.3(a).
02	☐	☐	☒	Systems with capacity > 167,000 BTUH equipped with outlet temperature controls per §110.3(c)1 unless covered by California Plumbing Code 613.0.
03	☐	☐	☒	Controls for circulating pumps or electrical heat trace systems are capable of automatically turning off the system per §110.3(c)2 unless systems serves healthcare facility.
04	☐	☐	☒	For recirculation systems serving mutiple dwelling units, design includes automatic pump controls per §150.1(c)8Bii, or §150.2 for additions or alterations.
05	☐	☐	☒	For recirculation systems serving individual dwelling units, design includes manual on/off controls as specified in Reference Appendix RA4.4.9 per §150.1(c)8.
06	☐	☐	☒	For replacement single heat pump water heaters serving individual dwelling units in climate zone 1-15, design includes communication interface that meets demand responsive control requirements of §110.12(a) per §150.2(b)1Hii.

I. DECLARATION OF REQUIRED CERTIFICATES OF INSTALLATION

Selections have been made based on information provided in this document. If any selection have been changed by permit applicant, an explanation should be included in Table E. Additional Remarks. These documents must be provided to the building inspector during construction and can be found online at https://www.energy.ca.gov/title24/2019standards/2019_compliance_documents/Nonresidential_Documents/NRCI/

Yes	No	Form/Title	Field Inspector Pass	Field Inspector Fail
●	○	NRCI-PLB-01-E - Must be submitted for all buildings	☐	☐
○	●	NRCI-PLB-02-E - Must be submitted for high-rise residential and hotel/motel central hot water distribution systems to be recognized for compliance.	☐	☐
○	●	NRCI-PLB-03-E - Must be submitted for high-rise residential and hotel/motel single dwelling unit hot water distribution systems to be recognized for compliance.	☐	☐

STATE OF CALIFORNIA

Domestic Water Heating System

NRCC-PLB-E — CALIFORNIA ENERGY COMMISSION

CERTIFICATE OF COMPLIANCE		NRCC-PLB-E
Project Name:	CCC Willits - Recreation Building	Report Page: (Page 6 of 7)
Project Address:		Date Prepared: 9/3/2020

J.DECLARATION OF REQUIRED CERTIFICATES OF ACCEPTANCE

There are no Certificates of Acceptance applicable to service water heating requirements.

K. DECLARATION OF REQUIRED CERTIFICATES OF VERIFICATION

Selections have been made based on information provided in this document. If any selection have been changed by permit applicant, an explanation should be included in Table E. Additional Remarks. These documents must be completed by a HERS Rater and provided to the building inspector during construction. The final documents must be created by a HERS Providers registry, but drafts can be found online at https://www.energy.ca.gov/title24/2019standards/2019_compliance_documents/Nonresidential_Documents/NRCI/

Yes	No	Form/Title	Field Inspector Pass	Field Inspector Fail
○	●	NRCV-PLB-21-H High-rise Residential Central Hot Water Distribution HERS Verification	☐	☐
○	●	NRCV-PLB-22-H High-rise Residential Individual Dwelling Unit Hot Water Distribution HERS Verification	☐	☐

STATE OF CALIFORNIA

Domestic Water Heating System

NRCC-PLB-E — CALIFORNIA ENERGY COMMISSION

CERTIFICATE OF COMPLIANCE		NRCC-PLB-E
Project Name:	CCC Willits - Recreation Building	Report Page: (Page 7 of 7)
Project Address:		Date Prepared: 9/3/2020

DOCUMENTATION AUTHOR'S DECLARATION STATEMENT

I certify that this Certificate of Compliance documentation is accurate and complete.

Documentation Author Name: Jessica Hughey	Documentation Author Signature:
Company: Capital Engineering Consultants Inc.	Signature Date: 10/20/2020
Address: 11020 Sun Center Dr. Suite 100	CEA/ HERS Certification Identification (if applicable):
City/State/Zip: Rancho Cordova CA 95670	Phone: (916) 850-3500

RESPONSIBLE PERSON'S DECLARATION STATEMENT

I certify the following under penalty of perjury, under the laws of the State of California:

1. The information provided on this Certificate of Compliance is true and correct.
2. I am eligible under Division 3 of the Business and Professions Code to accept responsibility for the building design or system design identified on this Certificate of Compliance (responsible designer)
3. The energy features and performance specifications, materials, components, and manufactured devices for the building design or system design identified on this Certificate of Compliance conform to the requirements of Title 24, Part 1 and Part 6 of the California Code of Regulations.
4. The building design features or system design features identified on this Certificate of Compliance are consistent with the information provided on other applicable compliance documents, worksheets, calculations, plans and specifications submitted to the enforcement agency for approval with this building permit application.
5. I will ensure that a completed signed copy of this Certificate of Compliance shall be made available with the building permit(s) issued for the building, and made available to the enforcement agency for all applicable inspections. I understand that a completed signed copy of this Certificate of Compliance is required to be included with the documentation the builder provides to the building owner at occupancy.

Responsible Designer Name: Kevin D. Stillman	Responsible Designer Signature:
Company: Capital Engineering Consultants, Inc.	Date Signed: 2020-09-03
Address: 11020 Sun Center Dr. Suite 100	License: M 33498
City/State/Zip: Rancho Cordova CA 95670	Phone:

IDENTIFICATION STAMP
DIV. OF THE STATE ARCHITECT
APP: 02-118630 INC:
REVIEWED FOR
SS ☐ FLS ☐ ACS ☑
DATE: 04/13/2021

OFFICE OF THE STATE FIRE MARSHAL
APPROVED FIRE AND PANIC ONLY
Approval of this plan does not authorize or approve any omission or deviation from applicable regulations. Final approval is subject to field inspection. One set of approved plans shall be available on the project site at all times.
PERMIT NO. 20-N-2332-CP
REVIEWED BY: LEO CATAYLO, OSFM
DATE: 4/ /2021

DGS GENERAL SERVICES
Department of General Services
State of California
Real Estate Services Division
Project Management & Development Branch
707 Third Street, Suite 4-105
West Sacramento, California 95605

NICHOLS MELBURG & ROSSETTO ARCHITECTS + ENGINEERS
300 Knollcrest Drive
Redding, CA. 96002
(530) 222-3300 (530) 222-3538 FAX
http://www.nmrdesign.com

Copyright © 2019
All ideas, designs, arrangements and plans indicated or represented by this drawing are owned by, and the property of, NICHOLS, MELBURG and ROSSETTO and were created, evolved and developed for use on, and in conjunction with, the specified project. None of such ideas, designs, arrangements or plans shall be used by, or disclosed to any person, firm or corporation for any purpose whatsoever without the written permission of NICHOLS, MELBURG and ROSSETTO

LICENSE STAMPS

REGISTERED PROFESSIONAL ENGINEER — KEVIN D. STILLMAN — M 33498 — EXPIRES 9/30/22 — MECHANICAL — STATE OF CALIFORNIA

DATE SIGNED: 10-20-20

CONSULTANT

CAPITAL ENGINEERING CONSULTANTS, INC.
RANCHO CORDOVA, CALIFORNIA
JD - HC/JH — PM - DESIGN TEAM
181205.00 — PROJECT NO.

DRAWING STATUS
CONSTRUCTION DOCUMENTS

ISSUE

No.	Date	Description
1	10/22/2020	INITIAL PLAN REVIEW
2	01/22/2021	AGENCY RESUBMITTAL
3	03/22/2021	AGENCY RESUBMITTAL

If drawing is not 30" x 42" it is a reduced print

PROJECT
RESIDENTIAL CENTER, UKIAH: REPLACEMENT OF EXISTING RESIDENTIAL CENTER
440 EAST HILL ROAD
WILLITS, CALIFORNIA 95490
MENDOCINO COUNTY
CALIFORNIA CONSERVATION CORP

Supervisor	Designed	Drawn
		Author

DSA Application No.
02-118630

SHEET TITLE
RECREATION BLDG TITLE 24 COMPLIANCE

DGS Project Number	NMR Project Number
0000000000001826	18-6456

Reference North: NORTH — Sheet Scale

Sheet Number: M402R

ISSUE DATE
July 9, 2021

Plot Date: 3/15/2021 1:24:20 PM
File Name: L:\Revit Local Files\CECI_DGS CCC Willits_Rec_MP18_Central_jdcruikKTH47.rvt

REFRIGERANT CONCENTRATION CALC

SYSTEM	REFRIGERANT		DESIGN ROOM FLOOR AREA [SQ FT]	DESIGN ROOM CLG HEIGHT [FT]	DESIGN ROOM VOLUME [CU FT]	CONCENTRATION [LBS / 1000 CF]	
	TYPE	CHARGE [LBS]				DESIGN	LIMIT
HP/W-1	R-410A	25.8	129	9'-0"	1,161	22.2	26
SAC/W-1	R-410A	3.6	94	15'-0"	1,410	2.6	26

NOTES:

1. DESIGN REFRIGERANT CHARGE IS CALCULATED USING BASIS OF DESIGN EQUIPMENT MANUFACTURER'S CATALOG DATA FOR FACTORY PRE-CHARGE AND ADDITIONAL CHARGE FOR ASSUMED LINE LENGTHS. INSTALLING CONTRACTOR SHALL PROVIDE UPDATED CALCULATIONS BASED ON ACTUAL REFRIGERANT CHARGE AND MAKE THEM AVAILABLE FOR REVIEW BY FIELD INSPECTOR OR OTHER AGENCIES.
2. CONCENTRATION LIMITS ARE TAKEN FROM 2019 CALIFORNIA MECHANICAL CODE TABLE 1102.3.

KEYNOTES:

1. PROVIDE WINDOW SENSOR AT OPERABLE WINDOW, FOR INTERLOCK WITH FAN COIL, SEE 1/M601.

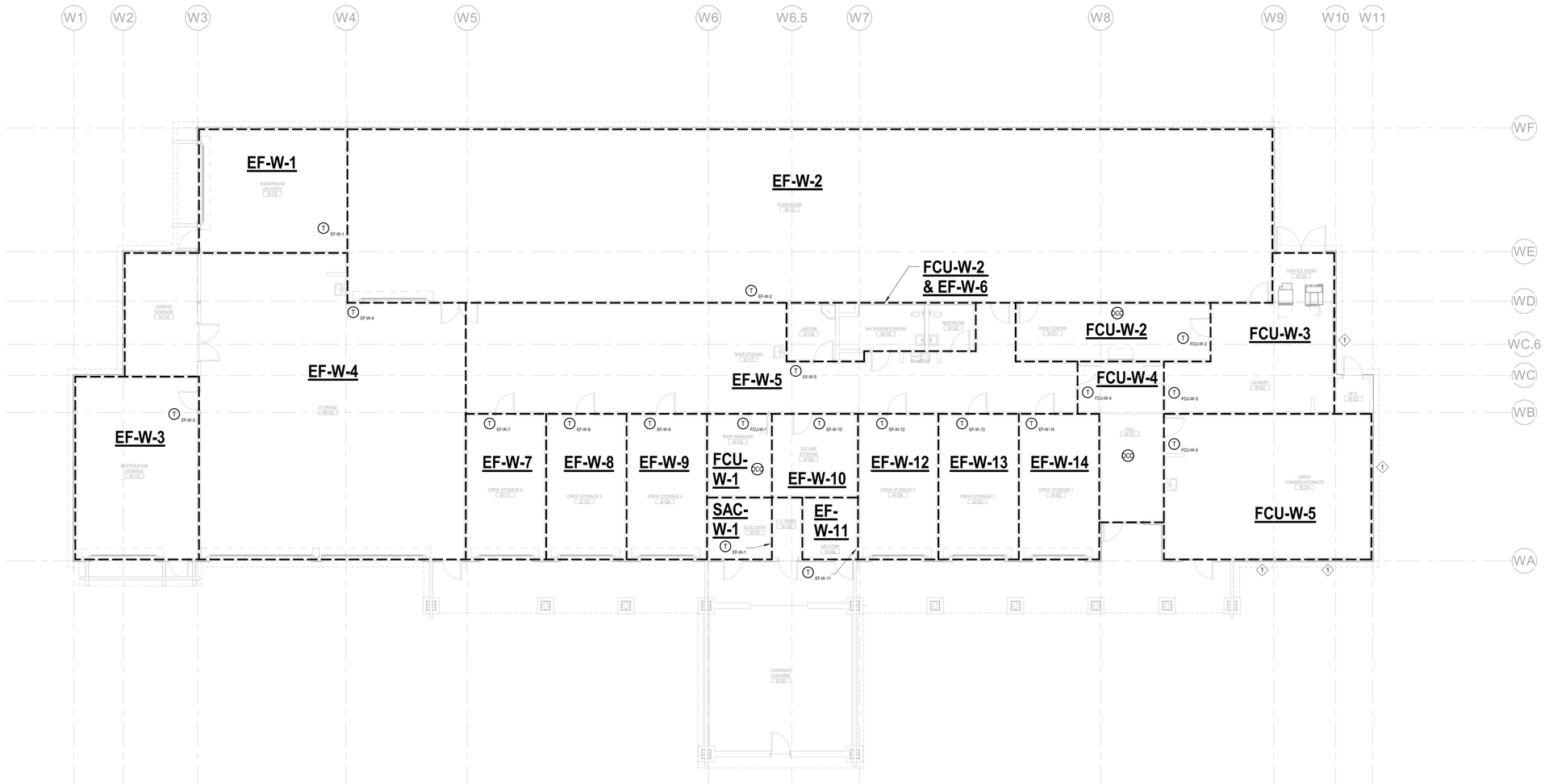

1 M101W WAREHOUSE BLDG HVAC ZONE PLAN

SCALE: 1/8" = 1'-0"

IDENTIFICATION STAMP
DIV. OF THE STATE ARCHITECT
APP: 02-118630 INC:
REVIEWED FOR
SS ☐ FLS ☐ ACS ☑
DATE: 04/13/2021

OFFICE OF THE STATE FIRE MARSHAL
APPROVED FIRE AND PANIC ONLY
Approval of this plan does not authorize or approve any omission or deviation from applicable regulations. Final approval is subject to field inspection. One set of approved plans shall be available on the project site at all times.
PERMIT NO. 20-N-2332-CP
REVIEWED BY: LEO CATAYLO, OSFM
DATE: 4 / /2021

GENERAL SERVICES
Department of General Services
State of California
Real Estate Services Division
Project Management & Development Branch
707 Third Street, Suite 4-105
West Sacramento, California 95605

NICHOLS MELBURG & ROSSETTO
ARCHITECTS + ENGINEERS
300 Knollcrest Drive
Redding, CA. 96002
(530) 222-3300 (530) 222-3538 FAX
http://www.nmrdesign.com

Copyright © 2019
All ideas, designs, arrangements and plans indicated or represented by this drawing are owned by, and the property of, NICHOLS, MELBURG and ROSSETTO and were created, evolved and developed for use on, and in conjunction with, the specified project. None of such ideas, designs, arrangements or plans shall be used by, or disclosed to any person, firm or corporation for any purpose whatsoever without the written permission of NICHOLS, MELBURG and ROSSETTO.

LICENSE STAMPS

REGISTERED PROFESSIONAL ENGINEER
M 33498
EXPIRES 9/30/22
MECHANICAL
STATE OF CALIFORNIA
DATE SIGNED: 10-20-20

CONSULTANT

CAPITAL
ENGINEERING CONSULTANTS, INC.
RANCHO CORDOVA, CALIFORNIA
JD - HCJH — PM - DESIGN TEAM
181205.00 — PROJECT NO.

DRAWING STATUS
CONSTRUCTION DOCUMENTS

ISSUE

No.	Date	Description
1	10/22/2020	INITIAL PLAN REVIEW
2	01/22/2021	AGENCY RESUBMITTAL
3	03/22/2021	AGENCY RESUBMITTAL

If drawing is not 30" x 42" it is a reduced print

PROJECT
RESIDENTIAL CENTER, UKIAH: REPLACEMENT OF EXISTING RESIDENTIAL CENTER
440 EAST HILL ROAD
WILLITS, CALIFORNIA 95490
MENDOCINO COUNTY
CALIFORNIA CONSERVATION CORP

Supervisor	Designed	Drawn
		Author

DSA Application No.
02-118630

SHEET TITLE
WAREHOUSE BLDG HVAC ZONE PLAN

DGS Project Number: 0000000000001826
NMR Project Number: 18-6456

Reference North: NORTH
Sheet Scale: As indicated
Sheet Number: M101W

ISSUE DATE
July 9, 2021

Plot Date: 3/18/2021 1:06:58 PM
File Name: L:\Revit Local Files\DECI_DGS CCC Willits_Warehouse_MP18_Central_jdovalKTH47.rvt

IDENTIFICATION STAMP
DIV. OF THE STATE ARCHITECT
APP: 02-118630 INC:
REVIEWED FOR
SS ☐ FLS ☐ ACS ☑
DATE: 04/13/2021

OFFICE OF THE STATE FIRE MARSHAL
APPROVED FIRE AND PANIC ONLY
Approval of this plan does not authorize or approve any omission or deviation from applicable regulations. Final approval is subject to field inspection. One set of approved plans shall be available on the project site at all times.
PERMIT NO.: 20-N-2332-CP
REVIEWED BY: LITO CATAYLO, OSFM
DATE: 4/ 1 /2021

SHEET NOTES:

1. SEE M001 FOR TABLE OF BRANCH DUCT SIZES TO INDIVIDUAL DIFFUSERS, GRILLES & REGISTERS. SIZE SUPPLY AND RETURN AIR DUCT PLENUMS ENTERING AND LEAVING FAN COILS TO MATCH SIZE OF DUCT CONNECTIONS AT FAN COILS. LINE DUCT AS INDICATED ON PLANS.

KEYNOTES:

1. EXHAUST DUCT BY DIV 23. PROVIDE ACCESS DOOR ON BOTTOM OF EACH STRAIGHT DUCT SECTION FOR CLEANING. DIV 23 CONTRACTOR SHALL COORDINATE ALL DRYER EXHAUST DUCT WITH DRYER MANUFACTURER'S INSTALLATION REQUIREMENTS AND WITH INSTALLING LAUNDRY EQUIPMENT CONTRACTOR. LAUNDRY EXHAUST DUCTS SHALL BE ALUMINUM CONSTRUCTION.
2. EXHAUST BRANCH SERVING SHOWER ROOM SHALL BE ALUMINUM CONSTRUCTION.
3. LOCATE OA INTAKE GRILLES HIGH ON WALL.
4. CONNECT 8" EXHAUST DUCT FROM DRYER OUTLET TO LINT COLLECTOR INLET, SEE LS-111 FOR MORE INFORMATION.
5. CONNECT 10" EXHAUST DUCT TO LINT COLLECTOR OUTLET, SEE LS-111 FOR MORE INFORMATION.
6. ELECTRICAL POWER METER, PROVIDED BY BAS CONTRACTOR. COORDINATE LOCATION AND INSTALLATION WITH DIV 26. SEE 2/M604 AND 1/M600.

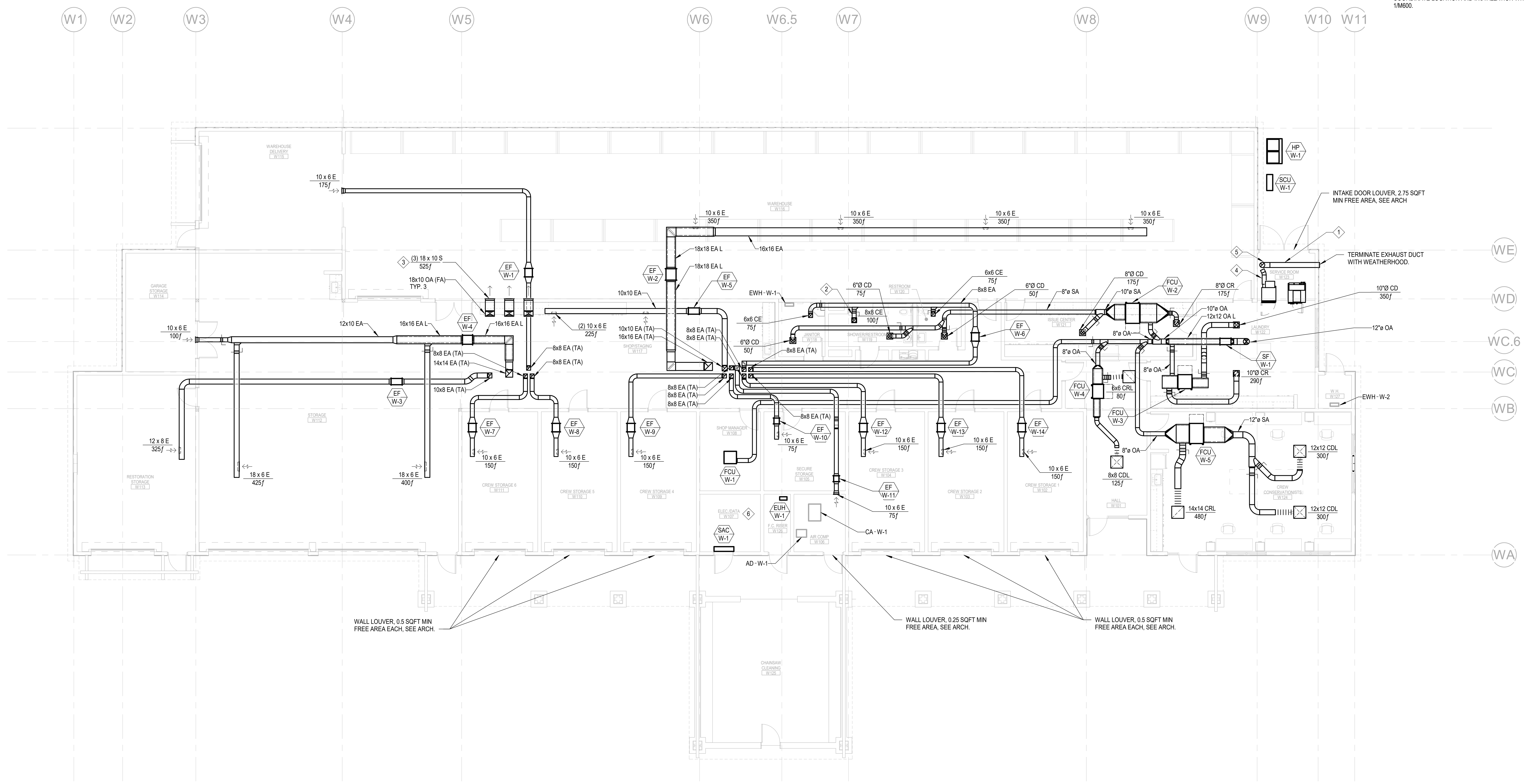

1 M201W WAREHOUSE BLDG HVAC FLOOR PLAN
SCALE: 1/8" = 1'-0"

Plot Date: 3/19/2021 1:10:02 PM
File Name: L:\Revit Local Files\CECI_DGS CCC Willits_Warehouse_MP18_Central_jduvall\KTH47.rvt

GENERAL SERVICES
Department of General Services
State of California
Real Estate Services Division
Project Management & Development Branch
707 Third Street, Suite 4-105
West Sacramento, California 95605

NICHOLS MELBURG & ROSSETTO
ARCHITECTS + ENGINEERS
300 Knollcrest Drive
Redding, CA. 96002
(530) 222-3300 (530) 222-3538 FAX
http://www.nmrdesign.com

Copyright © 2019
All ideas, designs, arrangements and plans indicated or represented by this drawing are owned by, and the property of, NICHOLS, MELBURG and ROSSETTO and were created, evolved and developed for use on, and in conjunction with, the specified project. None of such ideas, designs, arrangements or plans shall be used by, or disclosed to any person, firm or corporation for any purpose whatsoever without the written permission of NICHOLS, MELBURG and ROSSETTO.

LICENSE STAMPS
REGISTERED PROFESSIONAL ENGINEER
KEVIN D. STILLMAN
M 33498
EXPIRES 9/30/22
MECHANICAL
STATE OF CALIFORNIA
DATE SIGNED: 10.20.20

CONSULTANT
CAPITAL
ENGINEERING CONSULTANTS, INC.
RANCHO CORDOVA, CALIFORNIA
JD - HC/JH 181205.00
PM - DESIGN TEAM PROJECT NO.

DRAWING STATUS
CONSTRUCTION DOCUMENTS

ISSUE

No.	Date	Description
1	10/22/2020	INITIAL PLAN REVIEW
2	01/22/2021	AGENCY RESUBMITTAL
3	03/22/2021	AGENCY RESUBMITTAL

If drawing is not 30" x 42" it is a reduced print

PROJECT
RESIDENTIAL CENTER, UKIAH: REPLACEMENT OF EXISTING RESIDENTIAL CENTER
440 EAST HILL ROAD
WILLITS, CALIFORNIA 95490
MENDOCINO COUNTY
CALIFORNIA CONSERVATION CORP

Supervisor	Designed	Drawn
		Author

DSA Application No.
02-118630

SHEET TITLE
WAREHOUSE BLDG HVAC FLOOR PLAN

DGS Project Number	NMR Project Number
000000000001826	18-6456

Reference North: NORTH
Sheet Scale: 1/8" = 1'-0"
Sheet Number: M201W

ISSUE DATE
July 9, 2021

KEYNOTES:

1. PROVIDE DUCT PLENUM CONNECTION TO LOUVER. SIZED TO MATCH LOUVER DIMENSIONS.

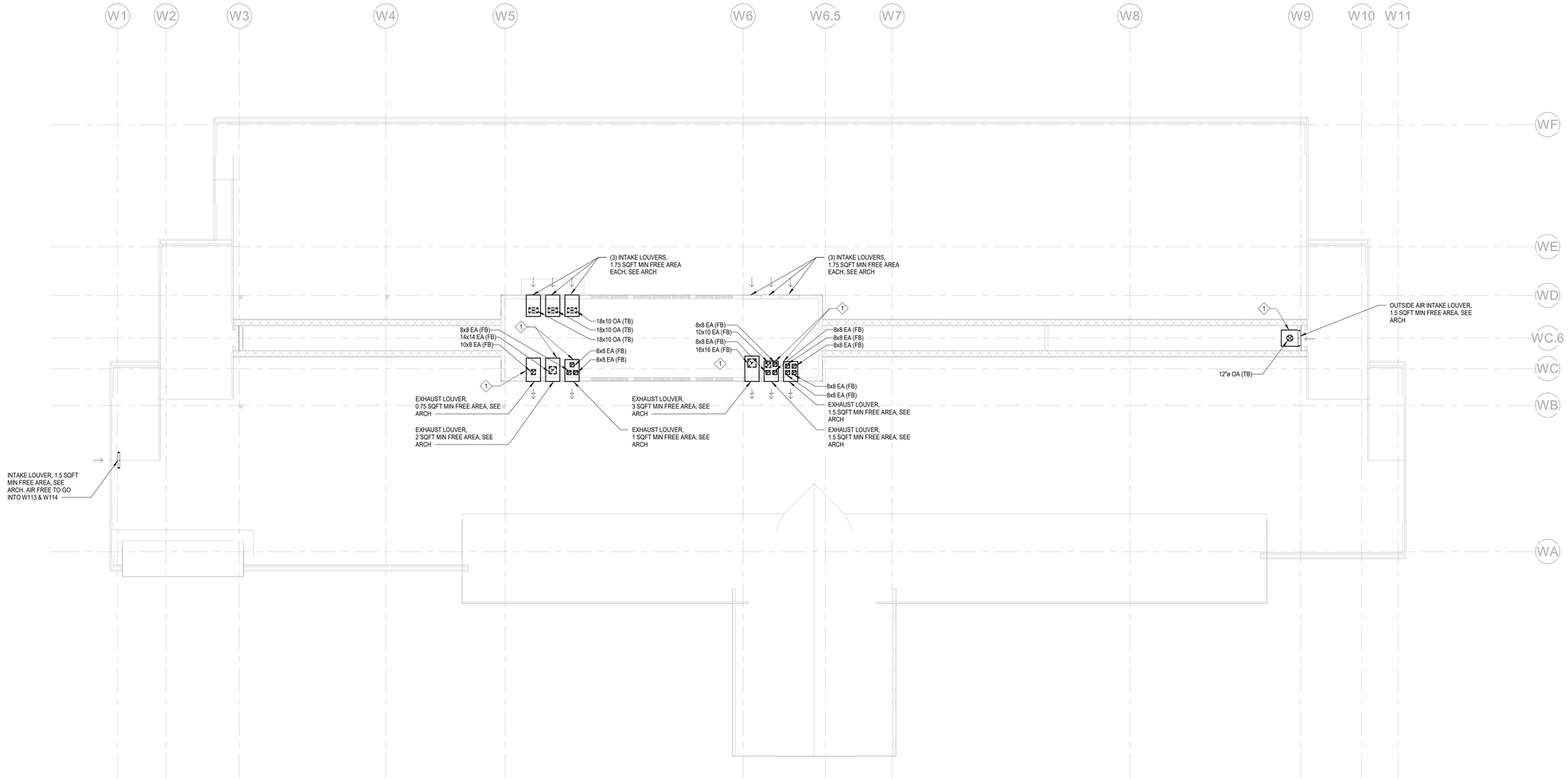

1 WAREHOUSE BLDG HVAC PLENUM PLAN

M202W

SCALE: 1/8" = 1'-0"

Plot Date: 3/18/2021 1:10:42 PM
File Name: I:\Revit Local Files\CED_DGS CCC Willits_Warehouse_MP18_Central_jduvall\KTH47.rvt

IDENTIFICATION STAMP
DIV. OF THE STATE ARCHITECT
APP: 02-118630 INC:
REVIEWED FOR
SS ☐ FLS ☐ ACS ☑
DATE: 04/13/2021

OFFICE OF THE STATE FIRE MARSHAL
APPROVED FIRE AND PANIC ONLY
Approval of this plan does not authorize or approve any omission or deviation from applicable regulations. Final approval is subject to field inspection. One set of approved plans shall be available on the project site at all times.
PERMIT NO. 20-N-2332-CP
REVIEWED BY: LEO CATAYLO, OSFM
DATE: 4 / /2021

DGS GENERAL SERVICES
Department of General Services
State of California
Real Estate Services Division
Project Management & Development Branch
707 Third Street, Suite 4-105
West Sacramento, California 95605

NICHOLS MELBURG & ROSSETTO
ARCHITECTS + ENGINEERS
300 Knollcrest Drive
Redding, CA. 96002
(530) 222-3300 (530) 222-3538 FAX
http://www.nmrdesign.com

Copyright © 2019
All ideas, designs, arrangements and plans indicated or represented by this drawing are owned by, and the property of, NICHOLS, MELBURG and ROSSETTO and were created, evolved and developed for use on, and in conjunction with, the specified project. None of such ideas, designs, arrangements or plans shall be used by, or disclosed to any person, firm or corporation for any purpose whatsoever without the written permission of NICHOLS, MELBURG and ROSSETTO

LICENSE STAMPS

REGISTERED PROFESSIONAL ENGINEER
KEVIN T. HOLMAN
M 33498
EXPIRES 9/30/22
MECHANICAL
STATE OF CALIFORNIA
DATE SIGNED: 10-20-20

CONSULTANT

CAPITAL
ENGINEERING CONSULTANTS, INC.
RANCHO CORDOVA, CALIFORNIA
JD - HC/JH — PM - DESIGN TEAM
181205.00 — PROJECT NO.

DRAWING STATUS
CONSTRUCTION DOCUMENTS

ISSUE

No.	Date	Description
1	10/22/2020	INITIAL PLAN REVIEW
2	01/22/2021	AGENCY RESUBMITTAL
3	03/22/2021	AGENCY RESUBMITTAL

If drawing is not 30" x 42" it is a reduced print

PROJECT
RESIDENTIAL CENTER, UKIAH: REPLACEMENT OF EXISTING RESIDENTIAL CENTER
440 EAST HILL ROAD
WILLITS, CALIFORNIA 95490
MENDOCINO COUNTY
CALIFORNIA CONSERVATION CORP

Supervisor	Designed	Drawn
		Author

DSA Application No.
02-118630

SHEET TITLE
WAREHOUSE BLDG HVAC PLENUM PLAN

DGS Project Number: 0000000000001826
NMR Project Number: 18-6456

Reference North: NORTH
Sheet Scale: 1/8" = 1'-0"
Sheet Number: M202W

ISSUE DATE
July 9, 2021

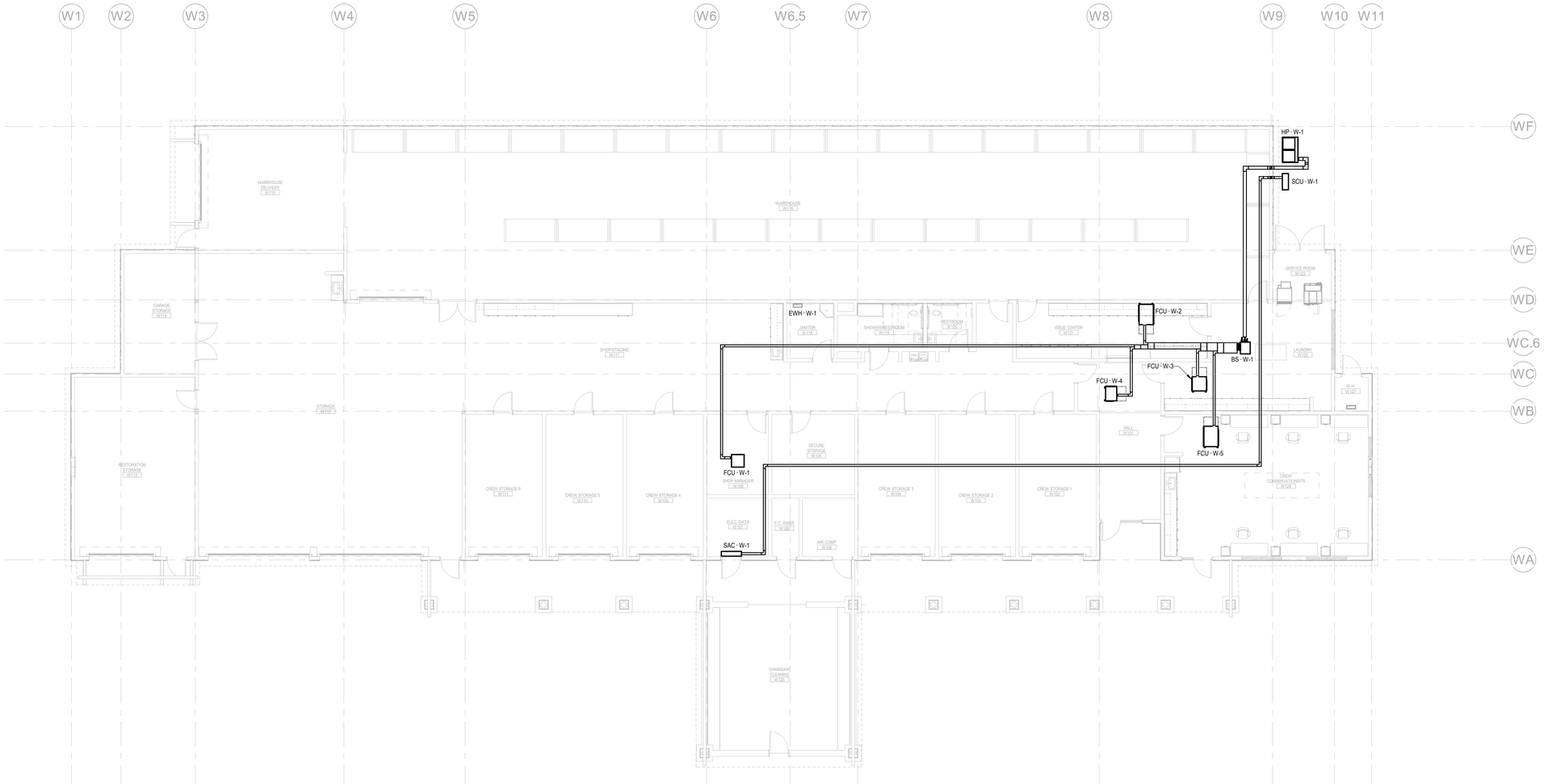

1 M301W WAREHOUSE BLDG HVAC PIPING FLOOR PLAN

SCALE: 1/8" = 1'-0"

SHEET NOTES:

1. SEE 7/M400 FOR VRF REFRIGERANT PIPING DIAGRAM & SIZES.
2. SEE "SPLIT SYSTEM OUTDOOR UNIT SCHEDULE" ON M003 FOR SPLIT SYSTEM REFRIGERANT LINE SIZES.
3. INDIVIDUAL REFRIGERANT PIPES ARE NOT MODELED. RECTANGULAR SHAPES ON FLOOR PLAN INDICATE PIPE GROUPINGS WITH MULTIPLE REFRIGERANT PIPES ROUTED TOGETHER. SHOWN FOR SPACE COORDINATION AND NOT TO REPRESENT ANY PIPING ENCLOSURE.

IDENTIFICATION STAMP
DIV. OF THE STATE ARCHITECT
APP: 02-118630 INC:
REVIEWED FOR
SS ☐ FLS ☐ ACS ☑
DATE: 04/13/2021

OFFICE OF THE STATE FIRE MARSHAL
APPROVED FIRE AND PANIC ONLY
Approval of this plan does not authorize or approve any omission or deviation from applicable regulations. Final approval is subject to field inspection. One set of approved plans shall be available on the project site at all times.
PERMIT NO. 20-N-2332-CP
REVIEWED BY: LEO CATAYLO, OSFM
DATE: 4 / /2021

GENERAL SERVICES
Department of General Services
State of California
Real Estate Services Division
Project Management & Development Branch
707 Third Street, Suite 4-105
West Sacramento, California 95605

NICHOLS MELBURG & ROSSETTO
ARCHITECTS + ENGINEERS
300 Knollcrest Drive
Redding, CA. 96002
(530) 222-3300 (530) 222-3538 FAX
http://www.nmrdesign.com

Copyright © 2019
All ideas, designs, arrangements and plans indicated or represented by this drawing are owned by, and the property of, NICHOLS, MELBURG and ROSSETTO and were created, evolved and developed for use on, and in conjunction with, the specified project. None of such ideas, designs, arrangements or plans shall be used by, or disclosed to any person, firm or corporation for any purpose whatsoever without the written permission of NICHOLS, MELBURG and ROSSETTO

LICENSE STAMPS

REGISTERED PROFESSIONAL ENGINEER
KENT D. DAVIS
M 33498
EXPIRES 9/30/22
MECHANICAL
STATE OF CALIFORNIA
DATE SIGNED: 10-20-20

CONSULTANT

CAPITAL
ENGINEERING CONSULTANTS, INC.
RANCHO CORDOVA, CALIFORNIA
JD - HCUH — PM - DESIGN TEAM
181205.00 — PROJECT NO.

DRAWING STATUS
CONSTRUCTION DOCUMENTS

ISSUE

No.	Date	Description
1	10/22/2020	INITIAL PLAN REVIEW
2	01/22/2021	AGENCY RESUBMITTAL
3	03/22/2021	AGENCY RESUBMITTAL

If drawing is not 30" x 42" it is a reduced print

PROJECT
RESIDENTIAL CENTER, UKIAH: REPLACEMENT OF EXISTING RESIDENTIAL CENTER
440 EAST HILL ROAD
WILLITS, CALIFORNIA 95490
MENDOCINO COUNTY
CALIFORNIA CONSERVATION CORP

Supervisor	Designed	Drawn
		Author

DSA Application No.
02-118630

SHEET TITLE
WAREHOUSE BLDG HVAC PIPING FLOOR PLAN

DGS Project Number: 0000000000001826
NMR Project Number: 18-6456

Reference North: NORTH
Sheet Scale: 1/8" = 1'-0"
Sheet Number: M301W

ISSUE DATE
July 9, 2021

Plot Date: 3/19/2021 1:10:07 PM
File Name: J:\Revit Local Files\CCI_DGS CCC Willits_Warehouse_MP18_Central_jduvall\KTH47.rvt

CERTIFICATE OF COMPLIANCE			NRCC-MCH-E
This document is used to demonstrate compliance for mechanical systems that are within the scope of the permit application and are demonstrating compliance using the prescriptive path outlined in §140.4, or §141.0(b)2 for alterations .			
Project Name:	CCC Willits - Warehouse Building	**Report Page:**	**(Page 1 of 10)**
Project Address:		**Date Prepared:**	9/23/2020

A. GENERAL INFORMATION

01	Project Location (city)	Willits	04	Total Conditioned Floor Area	2053
02	Climate Zone	2	05	Total Unconditioned Floor Area	0
03	Occupancy Types Within Project:		06	# of Stories (Habitable Above Grade)	1
☒	Office (B)	☐ Retail (M)	☐	Non-refrigerated Warehouse (S)	
☐	Hotel/ Motel Guest Rooms (R-1)	☐ School (E)	☐	Healthcare Facility (H)	
☐	High-Rise Residential (R-2/R-3)	☐ Relocatable Class Bldg (E)	☒	Other (write in)	See Table J

B. PROJECT SCOPE

This table Includes mechanical systems or components that are within the scope of the permit application and are demonstrating compliance using the prescriptive path outlined in §140.4, or §141.0(b)2 for alterations .

01		02		03	
Air System(s)		Wet System Components		Dry System Components	
☒	Heating Air System	☐	Water Economizer	☐	Air Economizer
☒	Cooling Air System	☐	Pumps	☐	Electric Resistance Heat
Mechanical Controls		☐	System Piping	☒	Fan Systems
☒	Mechanical Controls	☐	Cooling Towers	☐	Ductwork
		☐	Chillers	☒	Ventilation
		☐	Boilers	☐	Zonal Systems/ Terminal Boxes

CERTIFICATE OF COMPLIANCE			NRCC-MCH-E
Project Name:	CCC Willits - Warehouse Building	**Report Page:**	**(Page 2 of 10)**
Project Address:		**Date Prepared:**	9/23/2020

C. COMPLIANCE RESULTS

Table C will indicate if the project data input into the compliance document is compliant with mechanical requirements. This table is not editable by the user. If this table says "DOES NOT COMPLY" or "COMPLIES with Exceptional Conditions" refer to Table D., or the table indicated as not compliant for guidance.

01		02		03		04		05		06		07		08	09
System Summary §110.1, §110.2, §140.4	AND	Pumps §140.4(k)	AND	Fans/ Economizers §140.4(c), §140.4(e)	AND	System Controls §110.2, §120.2, §140.4(f)	AND	Ventilation §120.1	AND	Terminal Box Controls §140.4(d)	AND	Distribution §120.3, §140.4(l)	AND	Cooling Towers §110.2(e)2	Compliance Results
(See Table F)		(See Table G)		(See Table H)		(See Table I)		(See Table J)		(See Table K)		(See Table L)		(See Table M)	
Yes	AND		AND	Yes	AND	Yes	AND	Yes	AND		AND		AND		COMPLIES
Mandatory Measures Compliance (See Table Q for Details)										COMPLIES					

D. EXCEPTIONAL CONDITIONS

This table is auto-filled with uneditable comments because of selections made or data entered in tables throughout the form.

E. ADDITIONAL REMARKS

This table includes remarks made by the permit applicant to the Authority Having Jurisdiction.

CERTIFICATE OF COMPLIANCE			NRCC-MCH-E
Project Name:	CCC Willits - Warehouse Building	**Report Page:**	**(Page 3 of 10)**
Project Address:		**Date Prepared:**	9/23/2020

F. HVAC SYSTEM SUMMARY (DRY & WET SYSTEMS)

This table is used to demonstrate compliance for mechanical equipment with mandatory requirements found in §110.1 and §110.2(a) and prescriptive requirements found in §140.4(a), §140.4(b) and §140.4(k) or §141.0(b)2 for alterations.

Dry System Equipment Sizing (includes air conditioners, condensers, heat pumps, VRF, furnaces and unit heaters)

01	02	03	04	05	06	07	08	09	10	11
Name or Item Tag	Equipment Category per Tables 110.2	Equipment Type per Tables 110.2 & Title 20	Smallest Size Available[1] §140.4(a)	Equipment Sizing per Mechanical Schedule (Btu/h) §140.4 (a&b)						
				Heating Output[2,3]			Cooling Output[2,3]		Load Calculations[3,4]	
				Per Design (kBtu/h)	Rated (kBtu/h)	Supp. Heating Output (kBtu/h)	Sensible Per Design (kBtu/h)	Rated (kBtu/h)	Total Heating Load	Total Sensible Cooling Load
HP-W-1	Variable Refrigerant Flow	VRF heat pump, air cooled	Yes	59148	74327	0	65926	68057	50697	46316

[1] FOOTNOTES: Equipment shall be the smallest size, within the available options of the desired equipment line, necessary to meet the design heating and cooling loads of the building per §140.4(a). Healthcare facilities are excepted.
[2] It is common practice to show rated output capacity on the equipment schedule. Sensible cooling output comes from specification sheet tables.
[3] If equipment is heating only, leave cooling output and load blank. If equipment is cooling only, leave heating output and load blank.
[4] Authority Having Jurisdiction may ask for load calculations used for compliance per §140.4(b).

Dry System Equipment Efficiency (other than Package Terminal Air Conditioners (PTAC) and Package Terminal Heat Pumps (PTHP))

01	02	03	04	05	06	07	08	09
Name or Item Tag	Size Category (Btu/h)	Heating Mode				Cooling Mode		
		Rating Condition (°F)	Efficiency Unit	Minimum Efficiency Required per Tables 110.2 / Title 20	Design Efficiency	Efficiency Unit	Minimum Efficiency Required per Tables 110.2 / Title 20	Design Efficiency
HP-W-1	65,000 and 135,000	47 Fdb/ 43 Fwb OSA	COP	3.3	3.7	EER IEER	11.0 14.6	13.9 21.3

G. PUMPS

This section does not apply to this project.

CERTIFICATE OF COMPLIANCE			NRCC-MCH-E
Project Name:	CCC Willits - Warehouse Building	**Report Page:**	**(Page 4 of 10)**
Project Address:		**Date Prepared:**	9/23/2020

H. FAN SYSTEMS & AIR ECONOMIZERS

This table is used to demonstrate compliance with prescriptive requirements found in §140.4(c), §140.4(e) and §140.4(m) for fan systems. Fan systems serving healthcare facilities, or those serving only process loads, are exempt from these requirements and do not need to be included in Table H.

System Name:	HP-W-1	Economizer:[1]	Differential Temperature	Economizer Controls:	Designed per and (m)	System Fan Type:	Fixed Flow
01	02	03	04	05	06	07	08
Fan Name or Item Tag	Fan Function	Qty	Maximum Design Supply Airflow (CFM)	HP Unit[2]	Design HP	Fan Power Pressure Drop Adjustment - Table 140.4-B	
						Device	Design Airflow through Device (CFM)
VRF	Other (Transfer, VAV box)	1	1700	BHP	0.02		
VRF	Other (Transfer, VAV box)	1	0	BHP	0.02		
EF	Exhaust	1	0	BHP	0.03		
VRF	Other (Transfer, VAV box)	1	0	BHP	0.02		
VRF	Other (Transfer, VAV box)	1	0	BHP	0.01		
VRF	Other (Transfer, VAV box)	1	0	BHP	0.03		
Total System Design Supply Airflow (CFM):			1700	Total System Design (B)HP:	0.14	Maximum System Fan Power (B)HP:	0

[1] FOOTNOTES: Computer room economizers must meet requirements of §140.9(a) and will be documented on the NRCC-PRC-E document.
[2] If total filter pressure drop (SPa) is greater than 1 in WC, or 245 Pascal then enter it and total fan pressure drop across the fan (SPf) for system.

CERTIFICATE OF COMPLIANCE			NRCC-MCH-E
Project Name:	CCC Willits - Warehouse Building	**Report Page:**	**(Page 5 of 10)**
Project Address:		**Date Prepared:**	9/23/2020

I. SYSTEM CONTROLS

This table is used to demonstrate compliance with mandatory controls in §110.2 and §120.2 and prescriptive controls in §140.4(f) and (n) or requirements in §141.0(b)2E for altered space conditioning systems.

01	02	03	04	05	06	07	08	09
System Name	System Zoning	Conditioned Floor Area Being Served (ft^2)	Thermostats §110.2(b) & (c)[1], §120.2(a)or §141.0(b)2E	Shut-Off Controls §120.2(e)	Isolation Zone Controls §120.2(g)	Demand Response §120.2(b)	Supply Air Temp. Reset §140.4(f)	Window Interlocks per §140.4(n)
HP-W-1	Multi-zone w/ DDC to zone	<= 25,000 ft^2	Setback	Auto Timer Switch	4 Hour Timer	EMCS	Included	Provided

[1] FOOTNOTES: Gravity gas wall heaters, gravity floor heaters, gravity room heaters, non-central electric heaters, fireplaces or decorative gas appliances, wood stoves are not required to have setback thermostats.
*Notes: Controls with a * require a note in the space below explaining how compliance is achieved. EX: system 1: SA Temp Reset: Exempt because zones compliant with §140.4(d) ; EXCEPTION 1 to §140.4(f)

J. VENTILATION AND INDOOR AIR QUALITY

This table is used to demonstrate compliance with mandatory ventilation requirements in §120.1 and §120.2(e)3B for all nonresidential, high-rise residential and hotel/motel occupancies. For alterations, only ventialtion systems being altered within the scope of the permit application need to be documented in this table. In lieu of this table, the required outdoor ventilation rates and airflows may be shown on the plans or the calculations can be presented in a spreadsheet.

01	☐	Check the box if the project is showing ventilation calculations on the plans, or attaching the calculations instead of completing this table.
02	☐	Check this box if the project included new or altered high-rise residential dwelling units.
03	☐	Check the box if the project is using natural ventilation in any nonresidential or hotel/motel spaces to meet required ventilation rates per §120.1(c)2.

Nonresidential and Hotel/ Motel Ventilation Systems

04		05		06		07
System Name	HP-W-1	System Design OA CFM Airflow[1]	307.95	System Design Transfer Air CFM	0	Air Filtration per §120.1(c) and §141.0(b)2 [2] / Provided per §120.1(c) (NR and Hotel/Motel))
08	09	10 / 11	12	13 / 14	15	16

CERTIFICATE OF COMPLIANCE			NRCC-MCH-E
Project Name:	CCC Willits - Warehouse Building	**Report Page:**	**(Page 6 of 10)**
Project Address:		**Date Prepared:**	9/23/2020

J. VENTILATION AND INDOOR AIR QUALITY

Space Name ot item Tag	Mechanical Ventilation Required per §120.1(c)3 [3]					Exh. Vent per §120.1(c)4		DCV or Sensor Controls per §120.1(d)3, §120.1(d)5, and §120.1(e)3 [6]	
	Occupancy Type[4]	Conditioned Floor Area (ft^2)	# of Shower heads/ toilets	# of people[5]	Required Min OA CFM	Required Min CFM	Provided per Design CFM		
FCU-W-1	Office space	129			19.3	0	0	DCV / Occ Sensor	NA: Not required per §120.1(d)3
FCU-W-2	Office space	489			73.4	0	225	DCV / Occ Sensor	NA: Not required per §120.1(d)3
FCU-W-3	Coin-operated Laundry	400			60	0	0	DCV / Occ Sensor	NA: Not required per §120.1(d)3
FCU-W-4	Corridor Transition	279			41.8	0	0	DCV / Occ Sensor	NA: Not required per §120.1(d)3
FCU-W-5	Office space	756			113.4	0	0	DCV / Occ Sensor	NA: Not required per §120.1(d)3

[1] FOOTNOTES: System CFM should include both mechanical and natural ventilation for the zone/system
[2] Air filtration requirements apply to the following three system types per §120.1(c)1A : space conditioning systems utilizing ducts to supply air to occupiable space; supply-only ventilation systems providing outside air to occupiable space; supply side of balanced ventilation systems including heat recovery and energy recovery ventilation systems providing outside air to occupiable space.
[3] Uniform Mechanical Code may have more stringent ventilation requirements; the most stringent code requirement takes precedence.
[4] See Standards Tables 120.1-A and 120.1-B.
[5] For lecture halls with fixed seating, the expected number of occupants shall be shall be determined in accordance with the California Building Code.
[6] §120.2(e)3 requires systems serving rooms that are required by §130.1(c) to have lighting occupancy sensing controls to also have occupancy sensing zone controls for ventilation. Examples of spaces which require lighting occupancy sensors include offices 250ft^2 or smaller, multipurpose rooms less than 1,000 ft^2, classrooms, conference rooms, restrooms, aisles and open areas in warehouses, library book stack aisles, corridors, stairwells, parking garages, and loading and unloading zones, unless excepted by §130.1(c).

CERTIFICATE OF COMPLIANCE			NRCC-MCH-E
Project Name:	CCC Willits - Warehouse Building	**Report Page:**	**(Page 7 of 10)**
Project Address:		**Date Prepared:**	9/23/2020

K. TERMINAL BOX CONTROLS

This section does not apply to this project.

L. DISTRIBUTION (DUCTWORK and PIPING)

This section does not apply to this project.

M. COOLING TOWERS

This section does not apply to this project.

N. DECLARATION OF REQUIRED CERTIFICATES OF INSTALLATION

Selections have been made based on information provided in previous tables of this document. If any selection needs to be changed, please explain why in Table E Additional Remarks. These documents must be provided to the building inspector during construction and can be found online at https://www.energy.ca.gov/title24/2019standards/2019_compliance_documents/Nonresidential_Documents/NRCI/

Yes	No	Form/Title	Field Inspector Pass	Field Inspector Fail
●	○	NRCI-MCH-01-E - Must be submitted for all buildings	☐	☐

CERTIFICATE OF COMPLIANCE			NRCC-MCH-E
Project Name:	CCC Willits - Warehouse Building	**Report Page:**	**(Page 8 of 10)**
Project Address:		**Date Prepared:**	9/23/2020

O. DECLARATION OF REQUIRED CERTIFICATES OF ACCEPTANCE

Selections have been made based on information provided in previous tables of this document. If any selection needs to be changed, please explain why in Table E Additional Remarks. These documents must be provided to the building inspector during construction and can be found online at https://www.energy.ca.gov/title24/2019standards/2019_compliance_documents/Nonresidential_Documents/NRCA/

Yes	No	Form/Title	Field Inspector Pass	Field Inspector Fail
●	○	NRCA-MCH-02-A - Outdoor Air must be submitted for all newly installed HVAC units. Note: MCH-02-A can be performed in conjunction with MCH-07-A Supply Fan VFD Acceptance (if applicable) since testing activities overlap.	☐	☐
○	●	NRCA-MCH-03-A - Constant Volume Single Zone HVAC NOTE: This form does not automatically move to "Yes'. If Constant Volume Single Zone HVAC Systems are included in the scope, permit applicant should move this form to "Yes".	☐	☐
○	●	NRCA-MCH-04-A - Air Distribution Duct Leakage	☐	☐
○	●	NRCA-MCH-05-A - Air Economizer Controls	☐	☐
○	●	NRCA-MCH-06-A Demand Control Ventilation Systems must be submitted for all systems required to employ demand controlled ventilation (refer to §120.1(c)3) can vary outside ventilation flow rates based on maintaining interior carbon dioxide (CO_2) concentration setpoints.	☐	☐
○	●	NRCA-MCH-07-A Supply Fan Variable Flow Controls	☐	☐
○	●	NRCA-MCH-08-A Valve Leakage Test	☐	☐
○	●	NRCA-MCH-09-A Supply Water Temperature Reset Controls	☐	☐
○	●	NRCA-MCH-10-A Hydronic System Variable Flow Controls	☐	☐
●	○	NRCA-MCH-11-A Automatic Demand Shed Controls	☐	☐
○	●	NRCA-MCH-12-A FDD for Packaged Direct Expansion Units	☐	☐
○	●	NRCA-MCH-13-A Automatic FDD for Air Handling Units and Zone Terminal Units Acceptance	☐	☐
○	●	NRCA-MCH-14-A Distributed Energy Storage DX AC Systems Acceptance NOTE: This form does not automatically move to "Yes". If Distributed Energy System DX AC Systems are included in teh scope permit applicant should move this form to 'Yes".	☐	☐
○	●	NRCA-MCH-15-A Thermal Energy Storage (TES) System Acceptance NOTE: This form does not automatically move to "Yes". If Chilled water Storage, Ice-on-Coil Internal Melt, Ice-on-Coil External melt, Ice Harvester, Brine, Ice-Slurry, Eutecti Salt, Clathrate Hydrate Slurry (CHS), Cryogenic or Encapsulated (Ice Ball) Systems are included in the scope, permit applicant should move this form to 'Yes".	☐	☐
○	●	NRCA-MCH-16-A Supply Air Temperature Reset Controls	☐	☐
○	●	NRCA-MCH-17-A Condenser Water Temperature Reset Controls	☐	☐
○	●	NRCA-MCH-18-A Energy Management Control Systems	☐	☐

CERTIFICATE OF COMPLIANCE			NRCC-MCH-E
Project Name:	CCC Willits - Warehouse Building	**Report Page:**	**(Page 9 of 10)**
Project Address:		**Date Prepared:**	9/23/2020

O. DECLARATION OF REQUIRED CERTIFICATES OF ACCEPTANCE

○	●	NRCA-MCH-19-A Occupancy Sensor Controls	☐	☐
○	●	NRCA-MCH-20 Multi-Family Ventilation	☐	☐
○	●	NRCA-MCH-21 Multi-Family Envelope Leakage	☐	☐

P. DECLARATION OF REQUIRED CERTIFICATES OF VERIFICATION

Selections have been made based on information provided in previous tables of this document. If any selection needs to be changed, please explain why in Table E Additional Remarks. These documents must be completed by a HERS Rater and provided to the building inspector during construction. The finsl documents must be creted by a HERS Providrs registry, but drafts can be found online at https://www.energy.ca.gov/title24/2019standards/2019_compliance_documents/Nonresidential_Documents/NRCV/

Yes	No	Form/Title	Field Inspector Pass	Field Inspector Fail
○	●	NRCV-MCH-04-H Duct Leakaage Test *NOTE: Must be completed by a HERS Rater*	☐	☐
○	●	NRCV-MCH-24 Enclosure Air Leakaage Worksheet *NOTE: Must be completed by a HERS Rater*	☐	☐
○	●	NRCV-MCH-27 High-rise Resdential *NOTE: Must be completed by a HERS Rater*	☐	☐
○	●	NRCV-MCH-32 Local Mechanical Exhaust *NOTE: Must be completed by a HERS Rater*	☐	☐

Q. MANDATORY MEASURES DOCUMENTATION LOCATION

This table is used to indicate where mandatory measures are documented in the plan set or construction documentation.

01		02
Compliance with Mandatory Measures documented through MCH Mandatory Measures Note Block[1]	Yes	Plan sheet or construction document location: M-Sheets

IDENTIFICATION STAMP
DIV. OF THE STATE ARCHITECT
APP: 02-118630 INC:
REVIEWED FOR
SS ☐ FLS ☐ ACS ☑
DATE: 04/13/2021

OFFICE OF THE STATE FIRE MARSHAL
APPROVED FIRE AND PANIC ONLY
Approval of this plan does not authorize or approve any omission or deviation from applicable regulations. Final approval is subject to field inspection. One set of approved plans shall be available on the project site at all times.
PERMIT NO.: 20-N-2332-CP
REVIEWED BY: LITO CATAYLO, OSFM
DATE: 4/1/2021

GENERAL SERVICES
Department of General Services
State of California
Real Estate Services Division
Project Management & Development Branch
707 Third Street, Suite 4-105
West Sacramento, California 95605

NICHOLS MELBURG & ROSSETTO
ARCHITECTS + ENGINEERS
300 Knollcrest Drive
Redding, CA. 96002
(530) 222-3300 (530) 222-3538 FAX
http://www.nmrdesign.com

Copyright © 2019
All ideas, designs, arrangements and plans indicated or represented by this drawing are owned by, and the property of, NICHOLS, MELBURG and ROSSETTO and were created, evolved and developed for use on, and in conjunction with, the specified project. None of such ideas, designs, arrangements or plans shall be used by, or disclosed to any person, firm or corporation for any purpose whatsoever without the written permission of NICHOLS, MELBURG and ROSSETTO.

LICENSE STAMPS
REGISTERED PROFESSIONAL ENGINEER · M 33498 · EXPIRES 9/30/22 · MECHANICAL · STATE OF CALIFORNIA
DATE SIGNED: 10-20-20

CONSULTANT
CAPITAL ENGINEERING CONSULTANTS, INC.
RANCHO CORDOVA, CALIFORNIA
JD - HC/JH — PM - DESIGN TEAM
181205.00 — PROJECT NO.

DRAWING STATUS
CONSTRUCTION DOCUMENTS

ISSUE

No.	Date	Description
1	10/22/2020	INITIAL PLAN REVIEW
2	01/22/2021	AGENCY RESUBMITTAL
3	03/22/2021	AGENCY RESUBMITTAL

If drawing is not 30" x 42" it is a reduced print

PROJECT
RESIDENTIAL CENTER, UKIAH: REPLACEMENT OF EXISTING RESIDENTIAL CENTER
440 EAST HILL ROAD
WILLITS, CALIFORNIA 95490
MENDOCINO COUNTY
CALIFORNIA CONSERVATION CORP

Supervisor | Designed | Drawn: Author

DSA Application No.
02-118630

SHEET TITLE
WAREHOUSE BLDG TITLE 24 COMPLIANCE

DGS Project Number 000000000001826
NMR Project Number 18-6456

Reference North — NORTH
Sheet Scale
Sheet Number M401W

ISSUE DATE
July 9, 2021

Plot Date: 3/19/2021 1:10:08 PM
File Name: L:\Revit Local Files\CECI_DGS CCC Willits_Warehouse_MP18_Central_jduvalKTH47.rvt

STATE OF CALIFORNIA

Mechanical Systems

NRCC-MCH-E

CALIFORNIA ENERGY COMMISSION

CERTIFICATE OF COMPLIANCE			NRCC-MCH-E
Project Name:	CCC Willits - Warehouse Building	**Report Page:**	**(Page 10 of 10)**
Project Address:		**Date Prepared:**	9/23/2020

DOCUMENTATION AUTHOR'S DECLARATION STATEMENT

I certify that this Certificate of Compliance documentation is accurate and complete.

Documentation Author Name: Jessica Hughey	Documentation Author Signature: [signature]
Company: Capital Engineering Consultants Inc.	Signature Date: 10/20/2020
Address: 11020 Sun Center Dr. Suite 100	CEA/ HERS Certification Identification (if applicable):
City/State/Zip: Rancho Cordova CA 95670	Phone: (916) 850-3500

RESPONSIBLE PERSON'S DECLARATION STATEMENT

I certify the following under penalty of perjury, under the laws of the State of California:

1. The information provided on this Certificate of Compliance is true and correct.
2. I am eligible under Division 3 of the Business and Professions Code to accept responsibility for the building design or system design identified on this Certificate of Compliance (responsible designer)
3. The energy features and performance specifications, materials, components, and manufactured devices for the building design or system design identified on this Certificate of Compliance conform to the requirements of Title 24, Part 1 and Part 6 of the California Code of Regulations.
4. The building design features or system design features identified on this Certificate of Compliance are consistent with the information provided on other applicable compliance documents, worksheets, calculations, plans and specifications submitted to the enforcement agency for approval with this building permit application.
5. I will ensure that a completed signed copy of this Certificate of Compliance shall be made available with the building permit(s) issued for the building, and made available to the enforcement agency for all applicable inspections. I understand that a completed signed copy of this Certificate of Compliance is required to be included with the documentation the builder provides to the building owner at occupancy.

Responsible Designer Name: Kevin D. Stillman	Responsible Designer Signature: [signature]
Company: Capital Engineering Consultants, Inc.	Date Signed: 2020-09-23
Address: 11020 Sun Center Dr. Suite 100	License: M 33498
City/State/Zip: Rancho Cordova CA 95670	Phone:

STATE OF CALIFORNIA

Domestic Water Heating System

NRCC-PLB-E

CALIFORNIA ENERGY COMMISSION

CERTIFICATE OF COMPLIANCE NRCC-PLB-E

This document is used to demonstrate compliance for nonresidential occupancies with requirements in §110.1, §110.3, §120.3, and §140.5, and with requirements in §141.0 for additions and alterations, for domestic water heating scopes using the prescriptive path. For high-rise residential and hotel/motel occupancies compliance is demonstrated with requirements in §110.1, §110.3, §120.3, §150.0 and §150.1(c)8, and with requirements §150.2 for additions.

Project Name:	CCC Willits - Warehouse Building	**Report Page:**	**(Page 1 of 7)**
Project Address:		**Date Prepared:**	9/23/2020

A. GENERAL INFORMATION

01	Project Location (city)	Willits	02	Climate Zone	2
03	Occupancy Types Within Project (select all that apply):				
☒ Nonresidential	☐ High-Rise Residential	☐ Hotel/Motel			
☐ State Building	☐ Healthcare Facility	☐ Other (Write In)			

B. PROJECT SCOPE

This table includes domestic water heating systems that are within the scope of the permit application and are demonstrating compliance using the prescriptive paths outlined in §140.5, §150.1(c)8, and §141.0(a), or §141.0(b)2N for additions or alterations. Solar water heating systems are documented on the NRCC-SRA compliance document. Combined hydronic water heating systems are documented on the NRCC-MCH compliance document.

01	02	03		
My project consists of (check all that apply):	System Type[1,2]	System Components		
☒ New system (DHW system being installed for the first time in newly constructed building)	Individual System (serving nonresidential spaces)	☒ Equipment	☒ Distribution	☒ Controls
☐ System Alteration (equipment, distribution or controls)		☐ Equipment	☐ Distribution	☐ Controls

[1]*FOOTNOTES: Point of use water heaters, or other non-central systems used to serve nonresidential spaces, are considered individual systems.*

[2] *Dwelling units refers to hotel/motel guest rooms and units in a high-rise residential occupancy.*

STATE OF CALIFORNIA

Domestic Water Heating System

NRCC-PLB-E

CALIFORNIA ENERGY COMMISSION

CERTIFICATE OF COMPLIANCE			NRCC-PLB-E
Project Name:	CCC Willits - Warehouse Building	**Report Page:**	**(Page 2 of 7)**
Project Address:		**Date Prepared:**	9/23/2020

C. COMPLIANCE RESULTS

Table C will indicate if the project data input into the compliance document is compliant with water heating requirements. If this table says "DOES NOT COMPLY" or "COMPLIES with Exceptional Conditions" refer to Table D. or the table indicated as not compliant for guidance.

01	02	03	04
Domestic Hot Water Equipment	Distribution Systems	Controls	**Compliance Results**
Table F	Table G	Table H	
Yes	Yes	Yes	COMPLIES

D. EXCEPTIONAL CONDITIONS

This table is auto-filled with uneditable comments because of selections made or data entered in tables throughout the form.

E. ADDITIONAL REMARKS

This table is includes remarks made by the permit applicant to the Authority Having Jurisdiction.

STATE OF CALIFORNIA

Domestic Water Heating System

NRCC-PLB-E

CALIFORNIA ENERGY COMMISSION

CERTIFICATE OF COMPLIANCE			NRCC-PLB-E
Project Name:	CCC Willits - Warehouse Building	**Report Page:**	**(Page 3 of 7)**
Project Address:		**Date Prepared:**	9/23/2020

F. DOMESTIC HOT WATER EQUIPMENT

This table is used to demonstrate compliance with mandatory equipment requirements in §110.1 and §110.3. For high-rise residential and hotel/motel occupancies, compliance with prescriptive requirements in §150.1(c)8 must also be demonstrated and with §150.2 for addition and alteration scopes.

Equipment Schedule: Individual Systems

01	02	03	04	05	06
Name or Item Tag	Equipment Type	Volume (gal)	Max GPM/ First Hour Rating (FHR)	Rated Uniform Energy Factor (UEF)	Minimum Required Uniform Energy Factor (UEF)[1]
Instantaneous Electric	Electric Storage	<=2	FHR >=75	0.98	0

[1]*FOOTNOTE: Compliant equipment may be found in the Modernized Appliance Efficiency Database System (MAEDBS) on the Energy Commission website: https://cacertappliances.energy.ca.gov/Pages/Search/AdvancedSearch.aspx*

Water Heating Equipment All Occupancies

	Yes	No	Not Applicable	Requirement
18	☐	☐	☒	Unfired storage tank insulation shall have Internal + External >=R-16 OR External >=R-12. Label required per §110.3(c)3
19	☐	☐	☒	New state buildings 60% of energy for service water heating from site solar energy or recovered energy per §110.3(c)5
20	☐	☐	☒	Isolation valves for instantaneous water heater with input rating <6.8 kBTUH or 2 kW has been specified per §110.3(c)6

STATE OF CALIFORNIA

Domestic Water Heating System

NRCC-PLB-E

CALIFORNIA ENERGY COMMISSION

CERTIFICATE OF COMPLIANCE			NRCC-PLB-E
Project Name:	CCC Willits - Warehouse Building	**Report Page:**	**(Page 4 of 7)**
Project Address:		**Date Prepared:**	9/23/2020

G. DOMESTIC HOT WATER DISTRIBUTION SYSTEM

This table is used to demonstrate compliance for nonresidential occupancies with distribution requirements in §120.3 and §140.5. For high-rise residential and hotel/motel occupancies, compliance is demonstrated with requirements §110.3(c), §120.3, §150.0, §150.1

Mandatory Pipe Insulation All Occupancies

12	☒	For systems serving nonresidential spaces, pipe insulation for the following applications is specified to comply with Table 120.3-A (see below) per §120.3 : • Recirculating system piping, including supply and return piping of the water heater • The first 8 ft of hot and cold outlet piping, including between storage tank and heat trap, for a nonrecirculating storage system • Pipes that are externally heated
13	☒	Insulation shall be protected from damage, including that due to sunlight, moisture, equipment maintenance, and wind. Insulation exposed to weather shall be installed with a cover suitable for outdoor service per §120.3(b) and §150.0(j)3

TABLE 120.3-A PIPE INSULATION THICKNESS

Fluid Temperature Range (°F)	Conductivity Range (Btu-in per hour per ft² per °F)	Insulation Mean Rating Temp (°F)	Nominal Pipe Diameter (in)		
			< 1	1 to < 1.5	1.5 to < 4
			Minimum Insulation Required		
105-140	0.22 - 0.28	100	1.0 in or R-7.7	1.5 in or R-12.5	1.5 in or R-11

STATE OF CALIFORNIA

Domestic Water Heating System

NRCC-PLB-E

CALIFORNIA ENERGY COMMISSION

CERTIFICATE OF COMPLIANCE			NRCC-PLB-E
Project Name:	CCC Willits - Warehouse Building	**Report Page:**	**(Page 5 of 7)**
Project Address:		**Date Prepared:**	9/23/2020

H. DOMESTIC HOT WATER CONTROLS

This table is used to demonstrate compliance with control requirements in §110.3 for all occupancies. For high-rise residential and hotel/motel occupancies, compliance is also demonstrated with requirements in §150.1(c)8.

	Yes	No	Not Applicable	Requirement
01	☒	☐	☐	Construction documents require manufacturer certification that service water-heating systems are equipped with automatic temperature controls capable of adjusting temperature settings per §110.3(a).
02	☐	☐	☒	Systems with capacity > 167,000 BTUH equipped with outlet temperature controls per §110.3(c)1 unless covered by California Plumbing Code 613.0.
03	☐	☐	☒	Controls for circulating pumps or electrical heat trace systems are capable of automatically turning off the system per §110.3(c)2 unless systems serves healthcare facility.
04	☐	☐	☒	For recirculation systems serving multiple dwelling units, design includes automatic pump controls per §150.1(c)8Bii, or §150.2 for additions or alterations.
05	☐	☐	☒	For recirculation systems serving individual dwelling units, design includes manual on/off controls as specified in Reference Appendix RA4.4.9 per §150.1(c)8.
06	☐	☐	☒	For replacement single heat pump water heaters serving individual dwelling units in climate zone 1-15, design includes communication interface that meets demand responsive control requirements of §110.12(a) per §150.2(b)1Hiii.

I. DECLARATION OF REQUIRED CERTIFICATES OF INSTALLATION

Selections have been made based on information provided in this document. If any selection have been changed by permit applicant, an explanation should be included in Table E. Additional Remarks. These documents must be provided to the building inspector during construction and can be found online at https://www.energy.ca.gov/title24/2019standards/2019_compliance_documents/Nonresidential_Documents/NRCI/

Yes	No	Form/Title	Field Inspector Pass	Field Inspector Fail
●	○	NRCI-PLB-01-E - Must be submitted for all buildings	☐	☐
○	●	NRCI-PLB-02-E - Must be submitted for high-rise residential and hotel/motel central hot water distribution systems to be recognized for compliance.	☐	☐
○	●	NRCI-PLB-03-E - Must be submitted for high-rise residential and hotel/motel single dwelling unit hot water distribution systems to be recognized for compliance.	☐	☐

STATE OF CALIFORNIA

Domestic Water Heating System

NRCC-PLB-E

CALIFORNIA ENERGY COMMISSION

CERTIFICATE OF COMPLIANCE			NRCC-PLB-E
Project Name:	CCC Willits - Warehouse Building	**Report Page:**	**(Page 6 of 7)**
Project Address:		**Date Prepared:**	9/23/2020

J.DECLARATION OF REQUIRED CERTIFICATES OF ACCEPTANCE

There are no Certificates of Acceptance applicable to service water heating requirements.

K. DECLARATION OF REQUIRED CERTIFICATES OF VERIFICATION

Selections have been made based on information provided in this document. If any selection have been changed by permit applicant, an explanation should be included in Table E. Additional Remarks. These documents must be completed by a HERS Rater and provided to the building inspector during construction. The final documents must be created by a HERS Providers registry, but drafts can be found online at https://www.energy.ca.gov/title24/2019standards/2019_compliance_documents/Nonresidential_Documents/NRCI/

Yes	No	Form/Title	Field Inspector Pass	Field Inspector Fail
○	●	NRCV-PLB-21-H High-rise Residential Central Hot Water Distribution HERS Verification	☐	☐
○	●	NRCV-PLB-22-H High-rise Residential Individual Dwelling Unit Hot Water Distribution HERS Verification	☐	☐

STATE OF CALIFORNIA

Domestic Water Heating System

NRCC-PLB-E

CALIFORNIA ENERGY COMMISSION

CERTIFICATE OF COMPLIANCE			NRCC-PLB-E
Project Name:	CCC Willits - Warehouse Building	**Report Page:**	**(Page 7 of 7)**
Project Address:		**Date Prepared:**	9/23/2020

DOCUMENTATION AUTHOR'S DECLARATION STATEMENT

I certify that this Certificate of Compliance documentation is accurate and complete.

Documentation Author Name: Jessica Hughey	Documentation Author Signature: [signature]
Company: Capital Engineering Consultants Inc.	Signature Date: 10/20/2020
Address: 11020 Sun Center Dr. Suite 100	CEA/ HERS Certification Identification (if applicable):
City/State/Zip: Rancho Cordova CA 95670	Phone: (916) 850-3500

RESPONSIBLE PERSON'S DECLARATION STATEMENT

I certify the following under penalty of perjury, under the laws of the State of California:

1. The information provided on this Certificate of Compliance is true and correct.
2. I am eligible under Division 3 of the Business and Professions Code to accept responsibility for the building design or system design identified on this Certificate of Compliance (responsible designer)
3. The energy features and performance specifications, materials, components, and manufactured devices for the building design or system design identified on this Certificate of Compliance conform to the requirements of Title 24, Part 1 and Part 6 of the California Code of Regulations.
4. The building design features or system design features identified on this Certificate of Compliance are consistent with the information provided on other applicable compliance documents, worksheets, calculations, plans and specifications submitted to the enforcement agency for approval with this building permit application.
5. I will ensure that a completed signed copy of this Certificate of Compliance shall be made available with the building permit(s) issued for the building, and made available to the enforcement agency for all applicable inspections. I understand that a completed signed copy of this Certificate of Compliance is required to be included with the documentation the builder provides to the building owner at occupancy.

Responsible Designer Name: Kevin D. Stillman	Responsible Designer Signature: [signature]
Company: Capital Engineering Consultants, Inc.	Date Signed: 2020-09-23
Address: 11020 Sun Center Dr. Suite 100	License: M 33498
City/State/Zip: Rancho Cordova CA 95670	Phone:

IDENTIFICATION STAMP
DIV. OF THE STATE ARCHITECT
APP: 02-118630 INC:
REVIEWED FOR
SS ☐ FLS ☐ ACS ☑
DATE: 04/13/2021

OFFICE OF THE STATE FIRE MARSHAL
APPROVED FIRE AND PANIC ONLY
Approval of this plan does not authorize or approve any omission or deviation from applicable regulations. Final approval is subject to field inspection. One set of approved plans shall be available on the project site at all times.
PERMIT NO.: 20-N-2332-CP
REVIEWED BY: LITO CATAYLO, OSFM
DATE: 4/1/2021

GENERAL SERVICES
Department of General Services
State of California
Real Estate Services Division
Project Management & Development Branch
707 Third Street, Suite 4-105
West Sacramento, California 95605

NICHOLS MELBURG & ROSSETTO
ARCHITECTS + ENGINEERS
300 Knollcrest Drive
Redding, CA. 96002
(530) 222-3300 (530) 222-3538 FAX
http://www.nmrdesign.com

Copyright © 2019
All ideas, designs, arrangements and plans indicated or represented by this drawing are owned by, and the property of, NICHOLS, MELBURG and ROSSETTO and were created, evolved and developed for use on, and in conjunction with, the specified project. None of such ideas, designs, arrangements or plans shall be used by, or disclosed to any person, firm or corporation for any purpose whatsoever without the written permission of NICHOLS, MELBURG and ROSSETTO.

LICENSE STAMPS
REGISTERED PROFESSIONAL ENGINEER
KEVIN D. STILLMAN
M 33498
EXPIRES 9/30/22
MECHANICAL
STATE OF CALIFORNIA
DATE SIGNED: 10-20-20

CONSULTANT
CAPITAL
ENGINEERING CONSULTANTS, INC.
RANCHO CORDOVA, CALIFORNIA
JD - HC/JH 181205.00
PM - DESIGN TEAM PROJECT NO.

DRAWING STATUS
CONSTRUCTION DOCUMENTS

ISSUE

No.	Date	Description
1	10/22/2020	INITIAL PLAN REVIEW
2	01/22/2021	AGENCY RESUBMITTAL
3	03/22/2021	AGENCY RESUBMITTAL

If drawing is not 30" x 42" it is a reduced print

PROJECT
RESIDENTIAL CENTER, UKIAH: REPLACEMENT OF EXISTING RESIDENTIAL CENTER
440 EAST HILL ROAD
WILLITS, CALIFORNIA 95490
MENDOCINO COUNTY
CALIFORNIA CONSERVATION CORP

Supervisor	Designed	Drawn
		Author

DSA Application No.
02-118630

SHEET TITLE
WAREHOUSE BLDG
TITLE 24 COMPLIANCE

DGS Project Number	NMR Project Number
000000000001826	18-6456

Reference North
NORTH
Sheet Scale
Sheet Number
M402W

ISSUE DATE
July 9, 2021

Plot Date: 3/19/2021 1:10:10 PM
File Name: L:\Revit Local Files\CECI_DGS CCC Willits_Warehouse_MP18_Central_jduvalKTH47.rvt

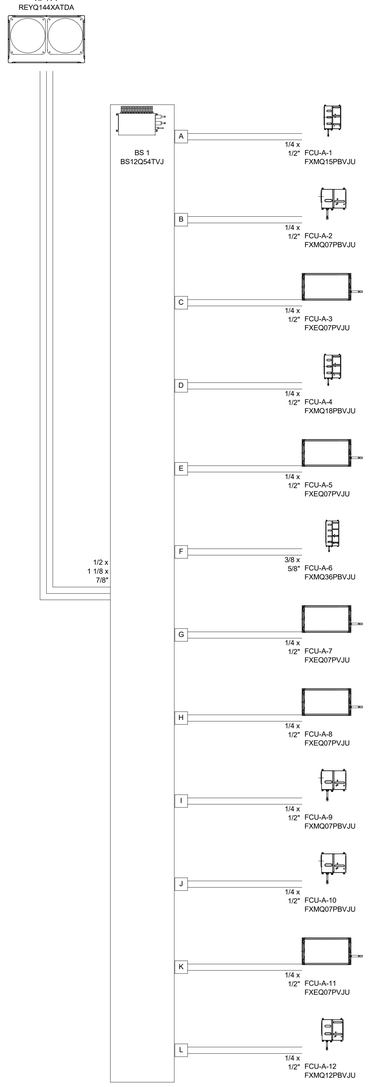

1 M400 HVAC PIPING DIAGRAM - ADMINISTRATION
SCALE: NONE

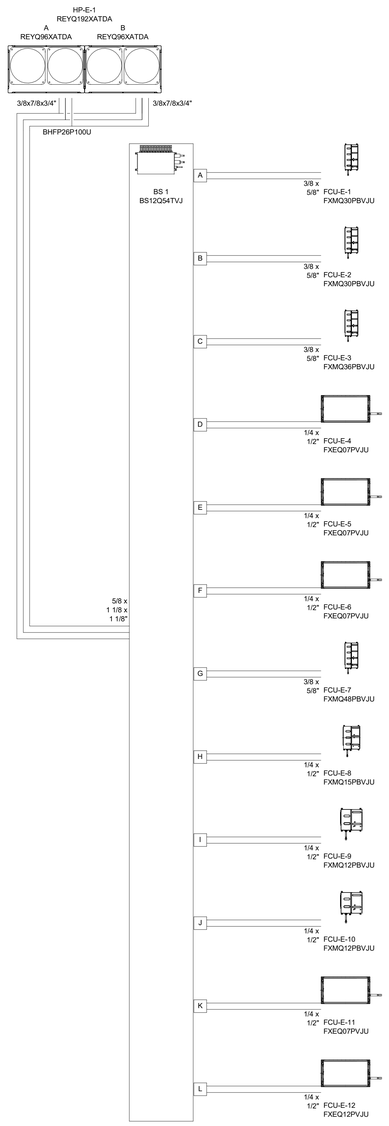

2 M400 HVAC PIPING DIAGRAM - EDUCATION
SCALE: NONE

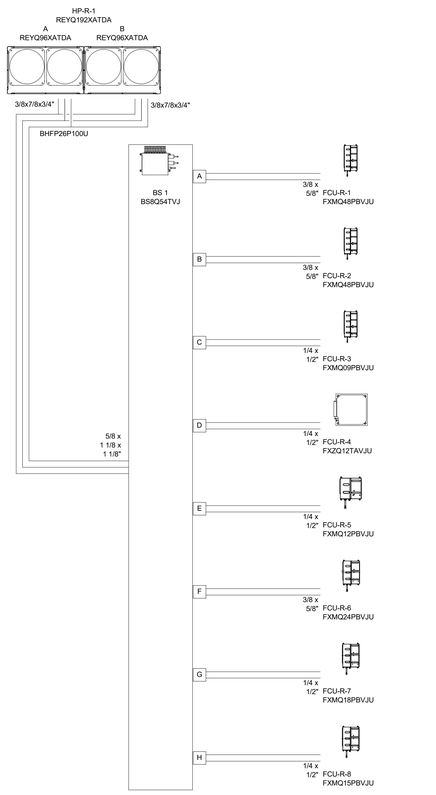

3 M400 HVAC PIPING DIAGRAM - RECREATION
SCALE: NONE

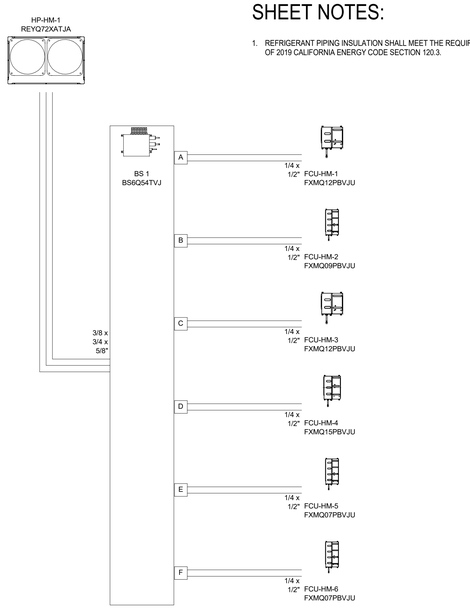

4 M400 HVAC PIPING DIAGRAM - MEN'S DORM
SCALE: NONE

SHEET NOTES:

1. REFRIGERANT PIPING INSULATION SHALL MEET THE REQUIREMENTS OF 2019 CALIFORNIA ENERGY CODE SECTION 120.3.

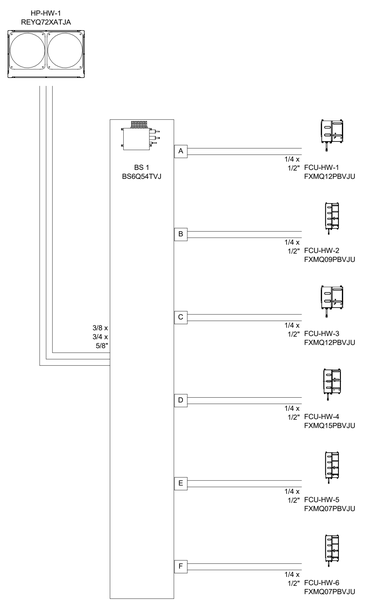

8 M400 HVAC PIPING DIAGRAM - WOMEN'S DORM
SCALE: NONE

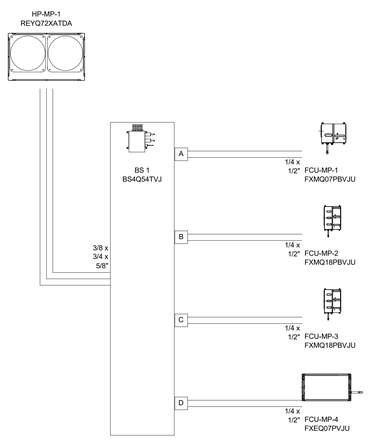

5 M400 HVAC PIPING DIAGRAM - MULTIPURPOSE
SCALE: NONE

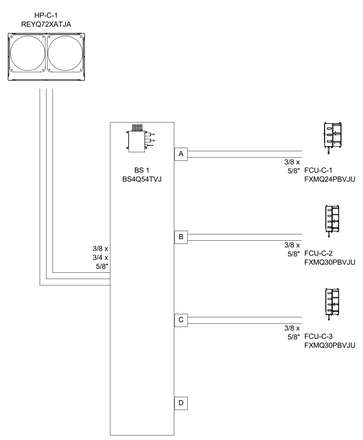

6 M400 HVAC PIPING DIAGRAM - COMET
SCALE: NONE

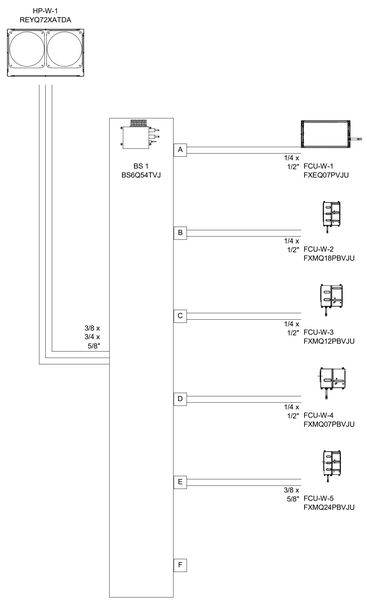

7 M400 HVAC PIPING DIAGRAM - WAREHOUSE
SCALE: NONE

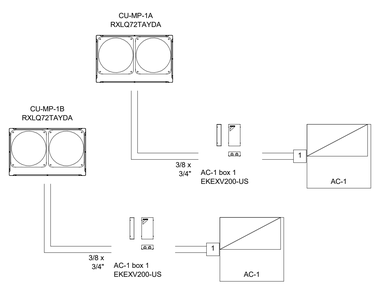

9 M400 HVAC PIPING DIAGRAM - MULTIPURPOSE AC-1
SCALE: NONE

Plot Date: 3/18/2021 11:18:00 PM
File Name: L:\Revit Local Files\DECD_DGS CCC Willits_Schedules_MP18_Central_jdovik\KTH47.rvt

IDENTIFICATION STAMP
DIV. OF THE STATE ARCHITECT
APP: 02-118630 INC:
REVIEWED FOR
SS ☐ FLS ☐ ACS ☑
DATE: 04/13/2021

OFFICE OF THE STATE FIRE MARSHAL
APPROVED FIRE AND PANIC ONLY
Approval of this plan does not authorize or approve any omission or deviation from applicable regulations. Final approval is subject to field inspection. One set of approved plans shall be available on the project site at all times.
PERMIT NO. 20-N-2332-CP
REVIEWED BY: LEO CATAYLO, OSFM
DATE: 4 / /2021

DGS GENERAL SERVICES
Department of General Services
State of California
Real Estate Services Division
Project Management & Development Branch
707 Third Street, Suite 4-105
West Sacramento, California 95605

NICHOLS MELBURG & ROSSETTO
ARCHITECTS + ENGINEERS
300 Knollcrest Drive
Redding, CA. 96002
(530) 222-3300 (530) 222-3538 FAX
http://www.nmrdesign.com

Copyright © 2019
All ideas, designs, arrangements and plans indicated or represented by this drawing are owned by, and the property of, NICHOLS, MELBURG and ROSSETTO and were created, evolved and developed for use on, and in conjunction with, the specified project. None of such ideas, designs, arrangements or plans shall be used by, or disclosed to any person, firm or corporation for any purpose whatsoever without the written permission of NICHOLS, MELBURG and ROSSETTO.

LICENSE STAMPS
REGISTERED PROFESSIONAL ENGINEER
M 33498
EXPIRES 8/30/22
MECHANICAL
STATE OF CALIFORNIA
DATE SIGNED: 10-20-20

CONSULTANT
CAPITAL
ENGINEERING CONSULTANTS, INC.
RANCHO CORDOVA, CALIFORNIA
JD - HC/JH — PM - DESIGN TEAM
181205.00 — PROJECT NO.

DRAWING STATUS
CONSTRUCTION DOCUMENTS

ISSUE

No.	Date	Description
1	10/22/2020	INITIAL PLAN REVIEW
2	01/22/2021	AGENCY RESUBMITTAL
3	03/22/2021	AGENCY RESUBMITTAL

If drawing is not 30" x 42" it is a reduced print

PROJECT
RESIDENTIAL CENTER, UKIAH: REPLACEMENT OF EXISTING RESIDENTIAL CENTER
440 EAST HILL ROAD
WILLITS, CALIFORNIA 95490
MENDOCINO COUNTY
CALIFORNIA CONSERVATION CORPS

Supervisor	Designed	Drawn
		Author

DSA Application No.
02-118630

SHEET TITLE
HVAC PIPING DIAGRAMS

DGS Project Number	NMR Project Number
00000000001826	18-6456

Sheet Scale
1/8" = 1'-0"

Sheet Number
M400

ISSUE DATE
July 9, 2021

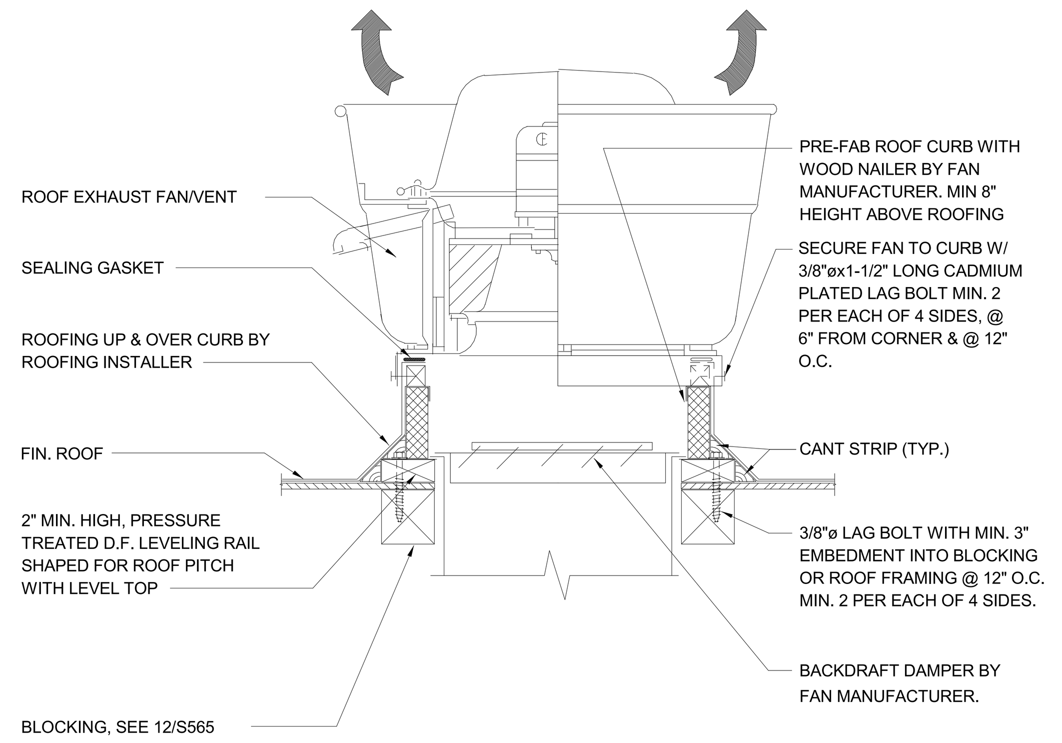

EXHAUST FAN/VENT MOUNTING - ROOF

12 / M500

SCALE : NONE

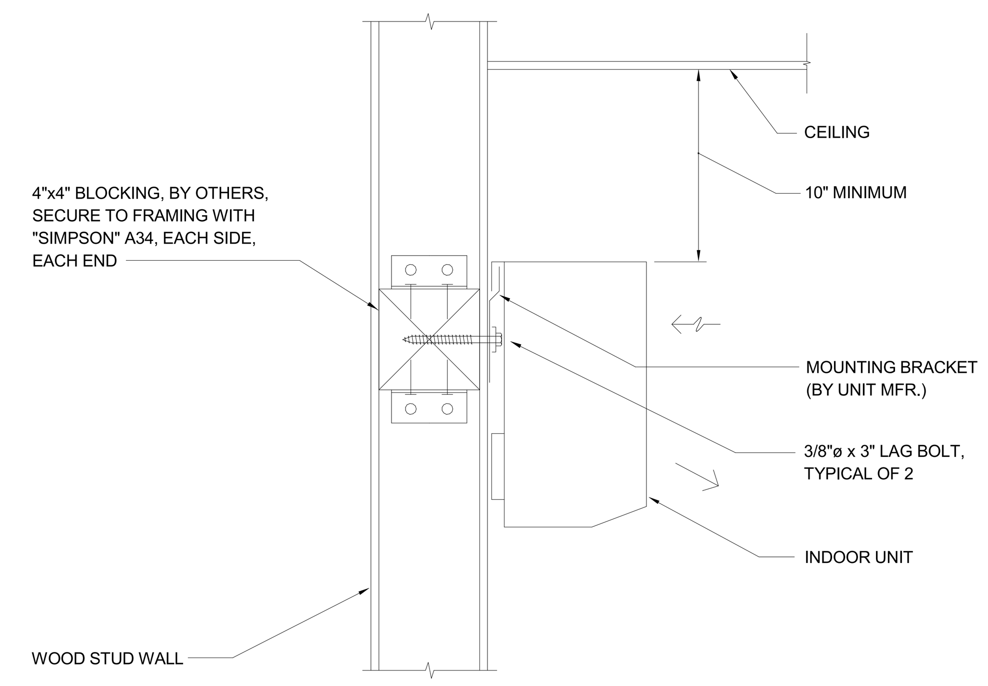

SAC INDOOR WALL MOUNTING

8 / M500

SCALE : NONE

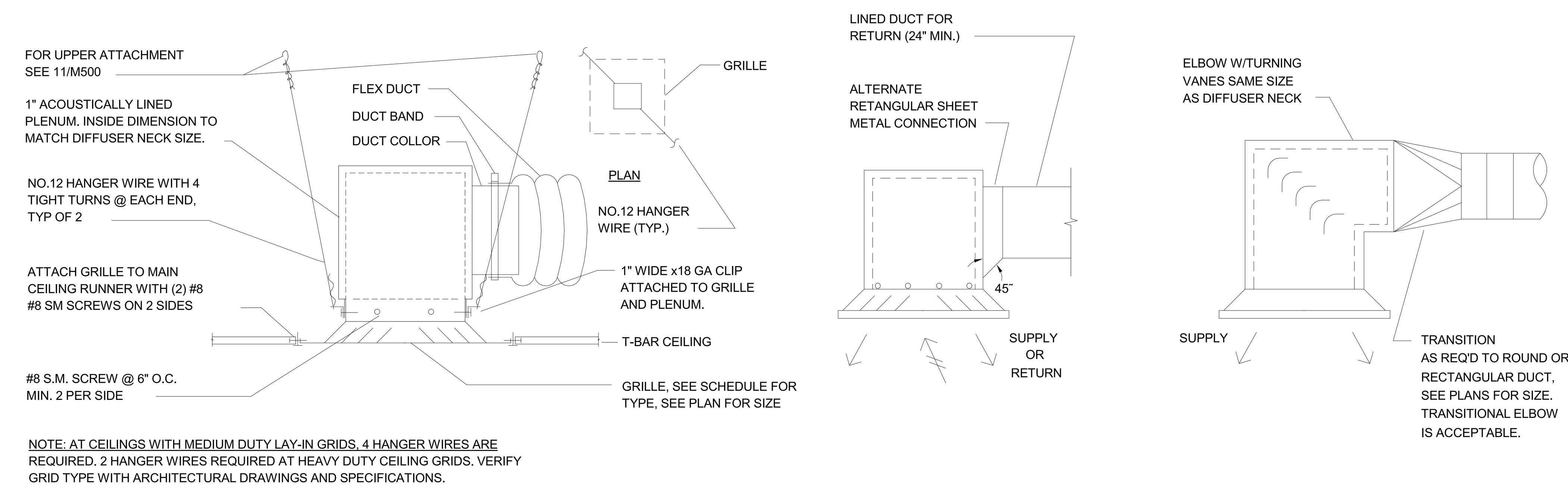

RETURN, EXHAUST, & SUPPLY REGISTER

1 / M500

SCALE : NONE

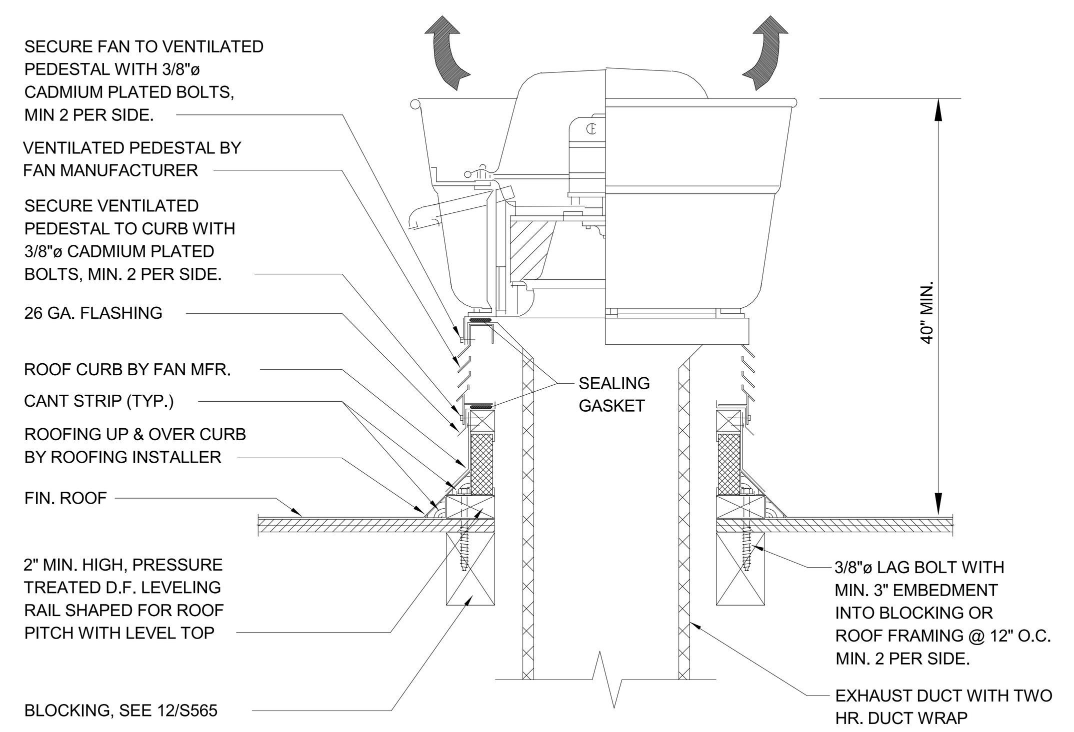

KITCHEN EXHAUST FAN MOUNTING

13 / M500

SCALE : NONE

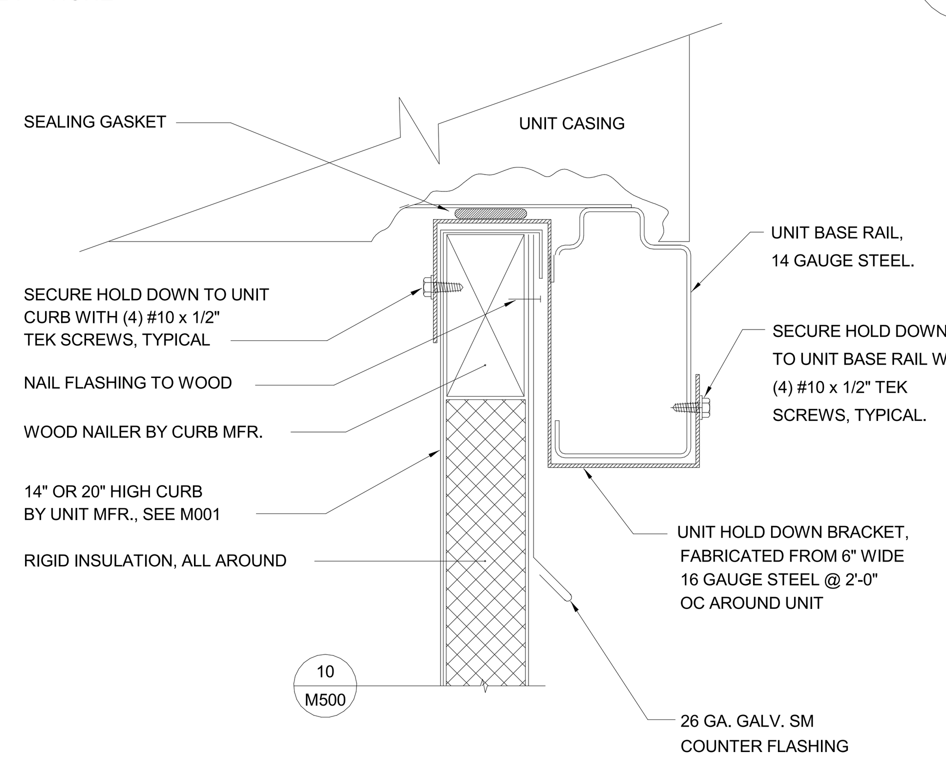

AC UNIT TO CURB MOUNTING

9 / M500

SCALE : NONE

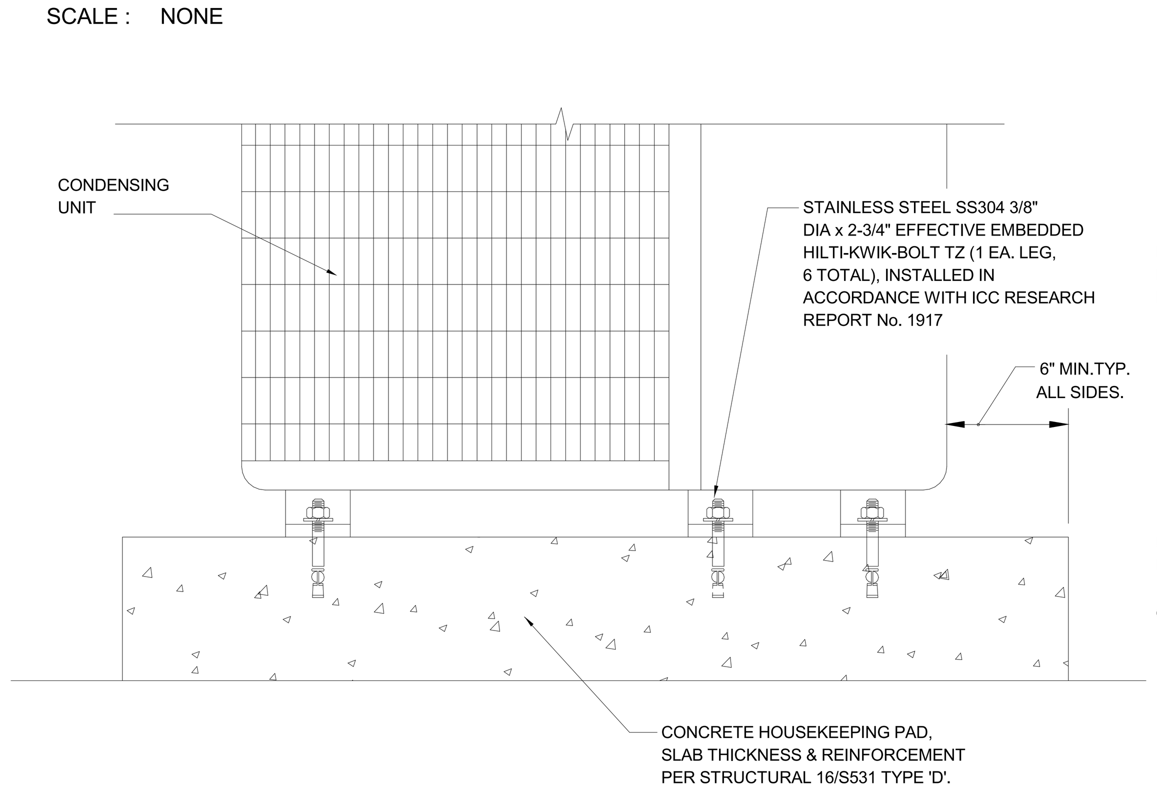

COND. UNIT MOUNTING - ON GRADE

5 / M500

SCALE : NONE

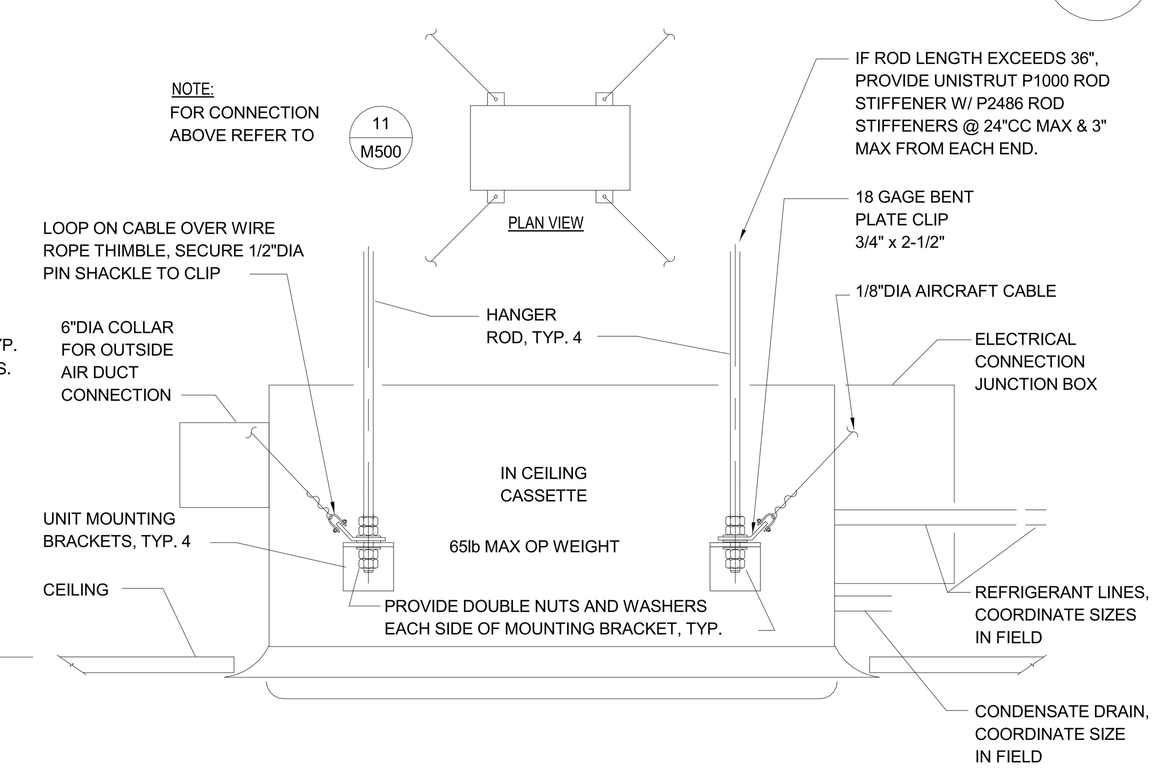

CASSETTE FCU MOUNTING

2 / M500

SCALE : NONE

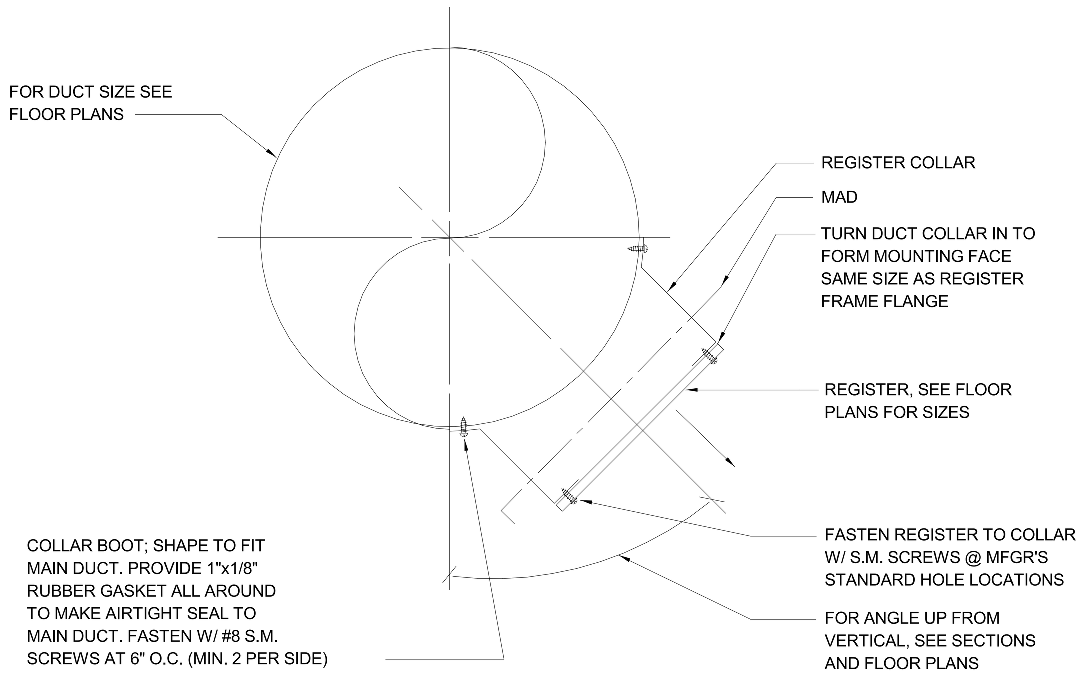

EXPOSED DUCT REGISTER MOUNTING

14 / M500

SCALE : NONE

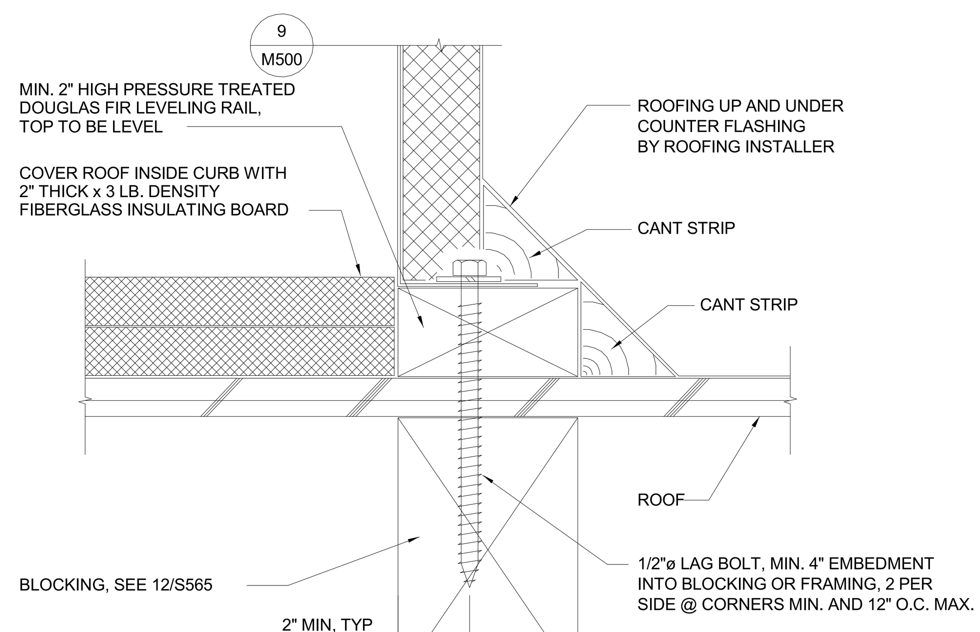

CURB TO STRUCTURE MOUNTING

10 / M500

SCALE : NONE

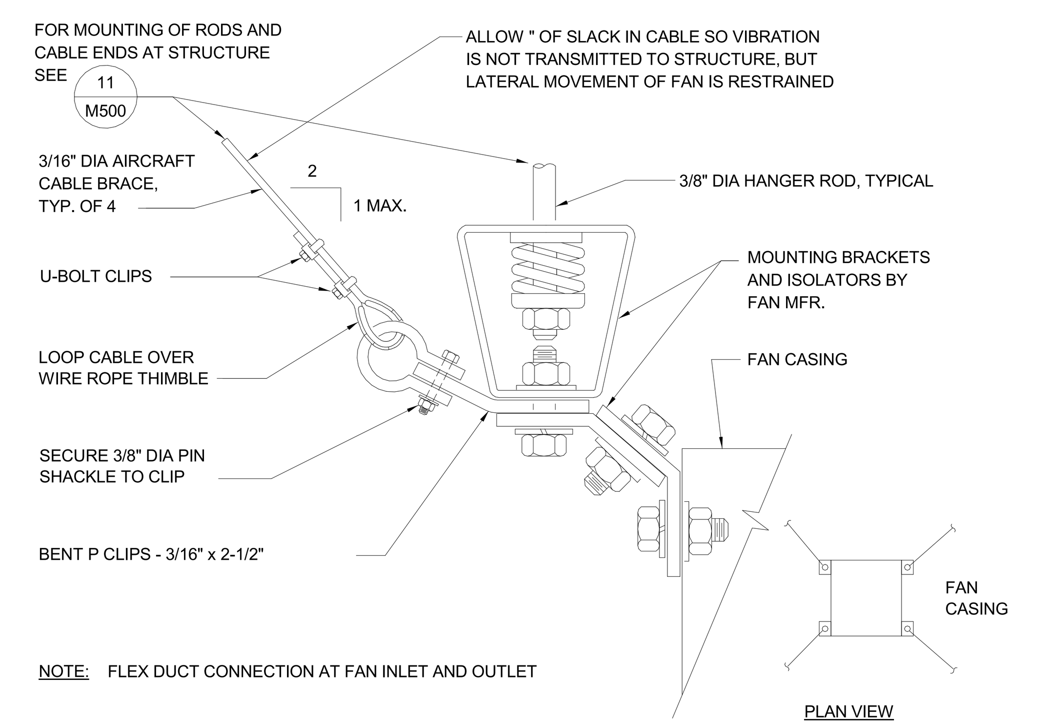

EXHAUST FAN MOUNTING - INLINE

6 / M500

SCALE : NONE

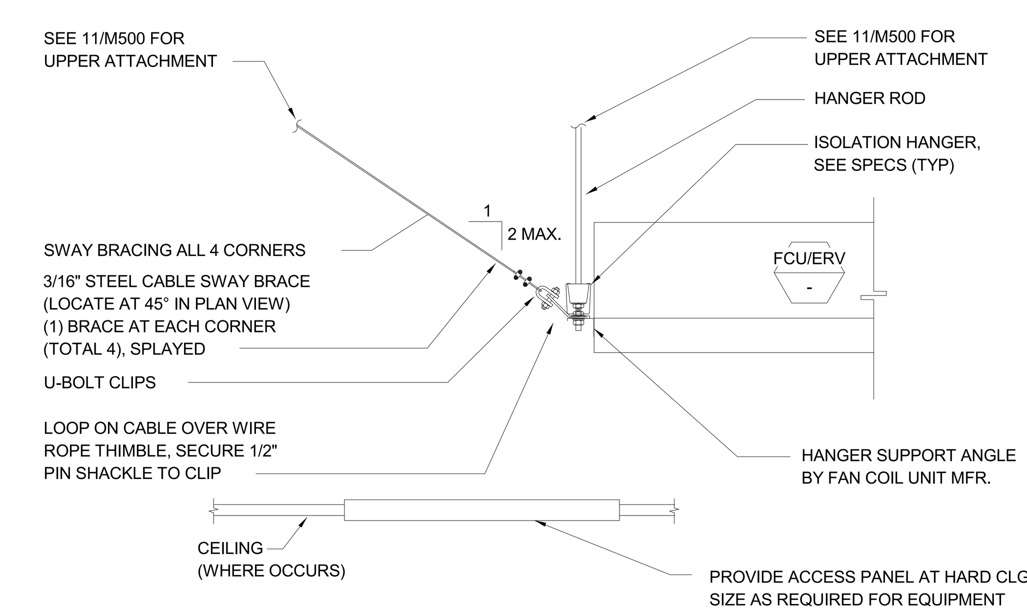

DUCTED FCU/ERV MOUNTING

3 / M500

SCALE : NONE

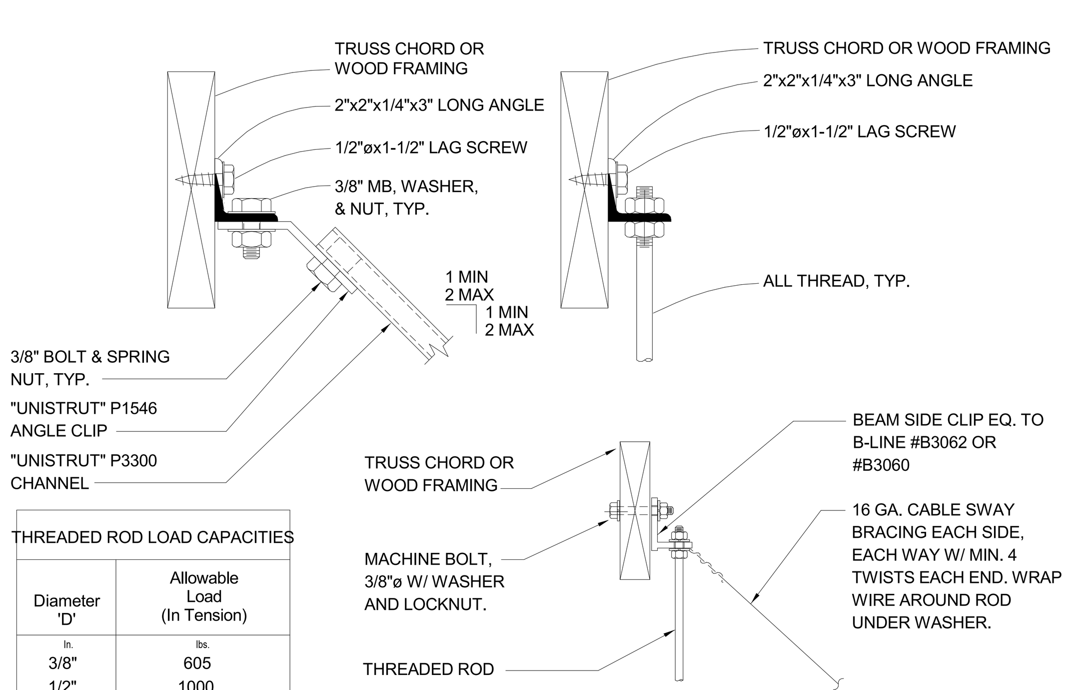

THREADED ROD LOAD CAPACITIES

Diameter 'D'	Allowable Load (In Tension)
In.	lbs.
3/8"	605
1/2"	1000
5/8"	1335
3/4"	1940

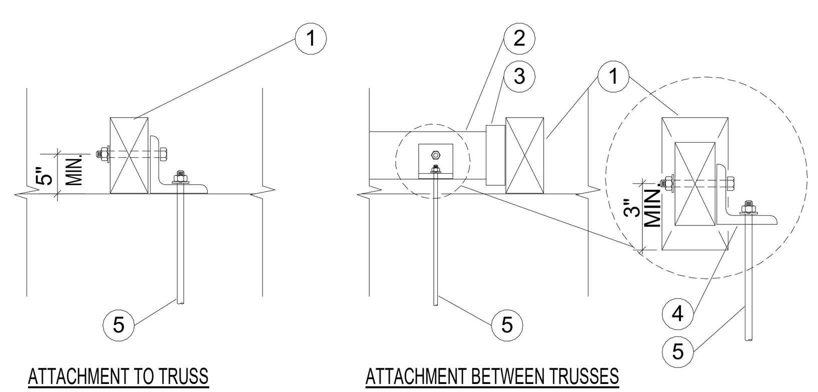

NUMBERED NOTES:

1. WOOD TRUSS CHORD OR WOOD FRAMING
2. 4x4 BLOCKING BETWEEN WOOD CHORDS
3. "SIMPSON" LUS44 HANGER (W/ 10D X 1-1/2" AT 2X FRAMING)
4. L2x2x1/4x3" LONG W/ 3/8" DIA THRU BOLT
5. HANGER ROD

UPPER ATTACHMENT DETAILS

11 / M500

SCALE : NONE

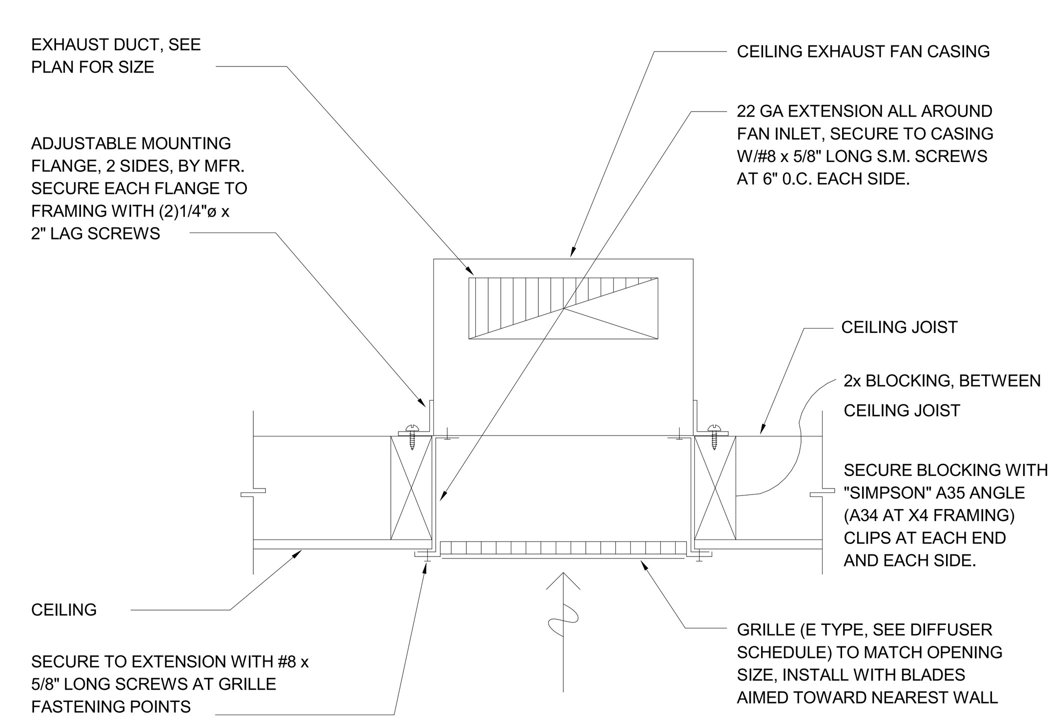

EXHAUST FAN MOUNTING - CEILING

7 / M500

SCALE : NONE

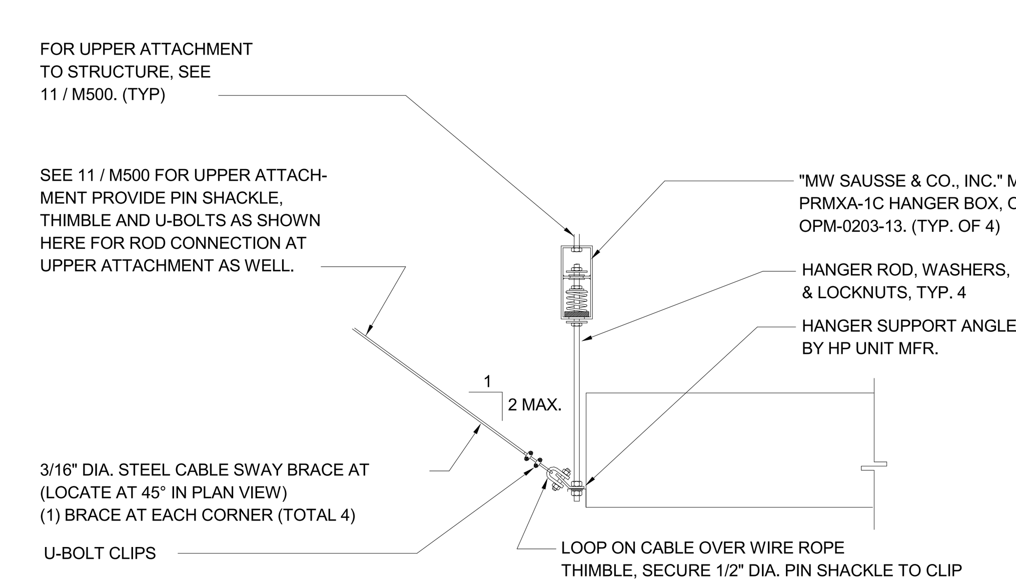

BRANCH SELECTOR MOUNTING

4 / M500

SCALE : NONE

IDENTIFICATION STAMP
DIV. OF THE STATE ARCHITECT
APP: 02-118630 INC:
REVIEWED FOR
SS ☐ FLS ☐ ACS ☑
DATE: 04/13/2021

OFFICE OF THE STATE FIRE MARSHAL
APPROVED FIRE AND PANIC ONLY
Approval of this plan does not authorize or approve any omission or deviation from applicable regulations. Final approval is subject to field inspection. One set of approved plans shall be available on the project site at all times.
PERMIT NO.: 20-N-2332-CP
REVIEWED BY: LITO CATAYLO, OSFM
DATE: 4/1/2021

DGS
GENERAL SERVICES
Department of General Services
State of California
Real Estate Services Division
Project Management & Development Branch
707 Third Street, Suite 4-105
West Sacramento, California 95605

NICHOLS MELBURG & ROSSETTO
ARCHITECTS + ENGINEERS
300 Knollcrest Drive
Redding, CA. 96002
(530) 222-3300 (530) 222-3538 FAX
http://www.nmrdesign.com

Copyright © 2019
All ideas, designs, arrangements and plans indicated or represented by this drawing are owned by, and the property of, NICHOLS, MELBURG and ROSSETTO and were created, evolved and developed for use on, and in conjunction with, the specified project. None of such ideas, designs, arrangements or plans shall be used by, or disclosed to any person, firm or corporation for any purpose whatsoever without the written permission of NICHOLS, MELBURG and ROSSETTO.

LICENSE STAMPS
REGISTERED PROFESSIONAL ENGINEER
M 33498
EXPIRES 9/30/22
MECHANICAL
STATE OF CALIFORNIA
DATE SIGNED: 10-20-20

CONSULTANT
CAPITAL
ENGINEERING CONSULTANTS, INC.
RANCHO CORDOVA, CALIFORNIA
JD - HC/JH — PM - DESIGN TEAM
181205.00 — PROJECT NO.

DRAWING STATUS
CONSTRUCTION DOCUMENTS

ISSUE

No.	Date	Description
1	10/22/2020	INITIAL PLAN REVIEW
2	01/22/2021	AGENCY RESUBMITTAL
3	03/22/2021	AGENCY RESUBMITTAL

If drawing is not 30" x 42" it is a reduced print

PROJECT
RESIDENTIAL CENTER, UKIAH: REPLACEMENT OF EXISTING RESIDENTIAL CENTER
440 EAST HILL ROAD
WILLITS, CALIFORNIA 95490
MENDOCINO COUNTY
CALIFORNIA CONSERVATION CORPS

Supervisor	Designed	Drawn
		Author

DSA Application No.
02-118630

SHEET TITLE
HVAC DETAILS

DGS Project Number	NMR Project Number
000000000001826	18-6456

Sheet Scale: 12" = 1'-0"
Sheet Number: M500

ISSUE DATE
July 9, 2021

Plot Date: 3/19/2021 1:16:10 PM
File Name: L:\Revit Local Files\CECI_DGS CCC Willits_Schedules_MP18_Central_jduvalKTH47.rvt

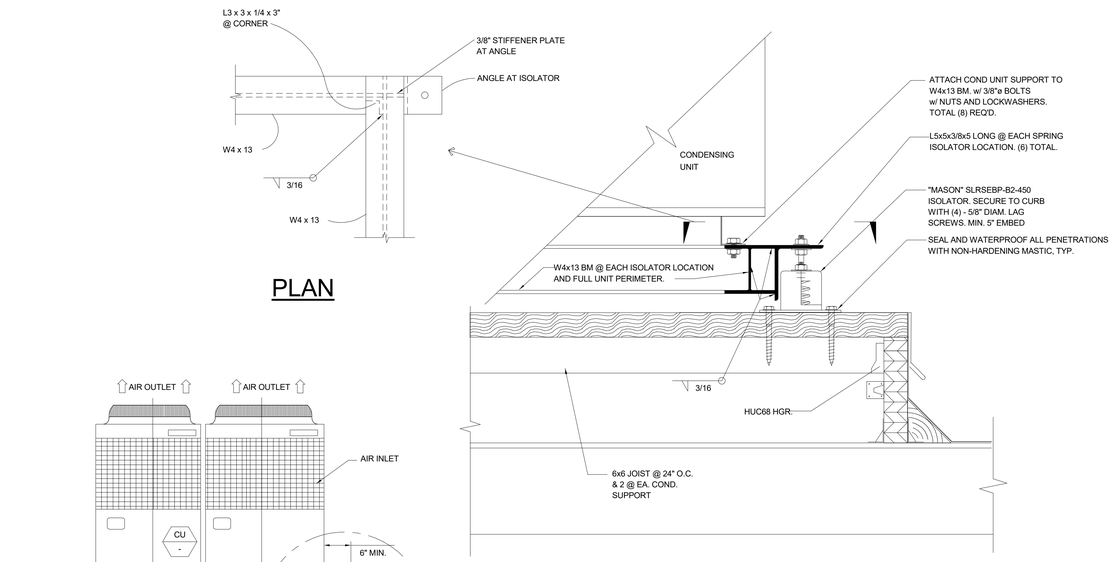

PLAN

SECTION

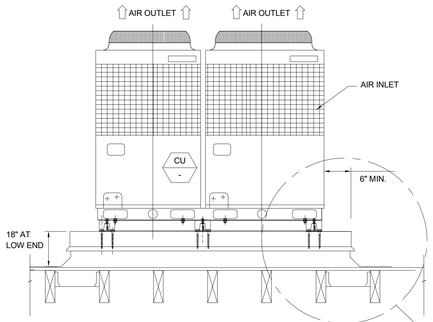

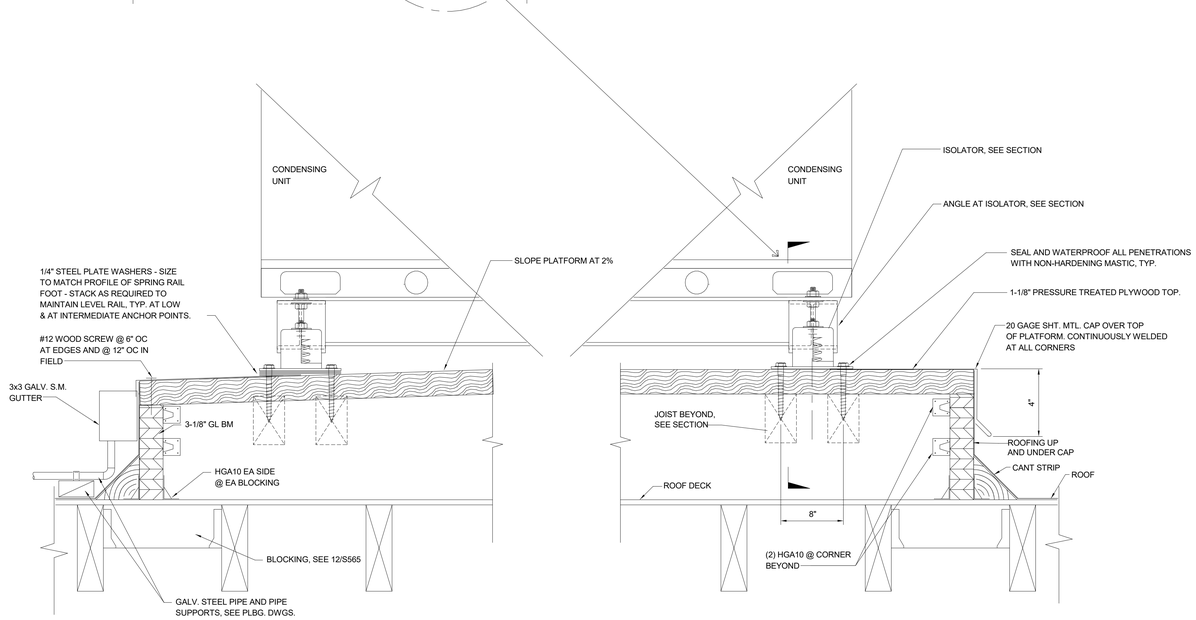

COND. UNIT MOUNTING - SPRING ISOLATORS ON ROOF

SCALE : NONE

2
M501

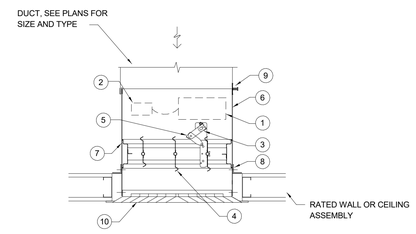

BASIS OF DESIGN PRODUCT: "RUSKIN" FSD60-G
UL555/555S LISTING: R5531
CSFM LISTING: #3235-0245:126

MOUNTING DETAIL - GRILLE

INSTALLATION SHALL BE PER THE DAMPER MANUFACTURER'S U.L. LISTING FOR DAMPER IN THE PLANE OF THE CEILING AND ACTUATOR OUTSIDE OF THE DUCT. MANUFACTURER SHALL PROVIDE ALL COMPONENTS NECESSARY TO INSTALL THE DAMPERS PER THIS REQUIREMENT.

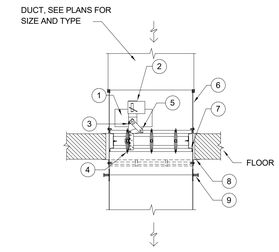

BASIS OF DESIGN PRODUCT: "RUSKIN" FSD60
UL555/555S LISTING: R5531
CSFM LISTING: #3235-0245:0126

MOUNTING DETAIL - FLOOR

INSTALLATION SHALL BE PER THE DAMPER MANUFACTURER'S U.L. LISTING FOR DAMPER IN THE PLANE OF THE FLOOR AND ACTUATOR OUTSIDE OF THE DUCT. MANUFACTURER SHALL PROVIDE ALL COMPONENTS NECESSARY TO INSTALL THE DAMPERS PER THIS REQUIREMENT.

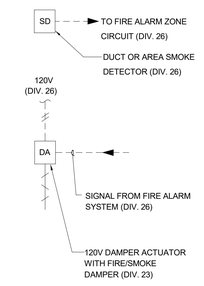

WIRING DIAGRAM

1. WIRE TO CLOSE DAMPER UPON SIGNAL FROM AREA SMOKE DETECTION FROM THE FIRE ALARM SYSTEM.
2. DAMPER ACTUATOR SHALL BE POWER-OPEN, FAIL-CLOSED TYPE.

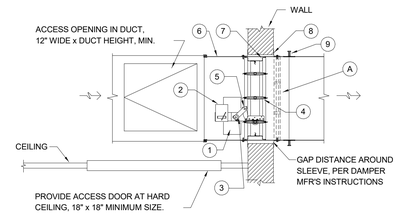

BASIS OF DESIGN PRODUCT: "RUSKIN" FSD60
UL555/555S LISTING: R5531
CSFM LISTING: #3235-0245:0126

MOUNTING DETAIL - WALL

INSTALLATION SHALL BE PER THE DAMPER MANUFACTURER'S U.L. LISTING FOR DAMPER IN THE PLANE OF THE WALL AND ACTUATOR OUTSIDE OF THE DUCT. MANUFACTURER SHALL PROVIDE ALL COMPONENTS NECESSARY TO INSTALL THE DAMPERS PER THIS REQUIREMENT.

FIRE & SMOKE DAMPERS SHALL BE STATE FIRE MARSHALL APPROVED AND INSTALLED IN STRICT ACCORDANCE WITH MANUFACTURERS WRITTEN INSTRUCTIONS. MANUFACTURER'S INSTRUCTIONS SHALL BE MADE AVAILABLE ON-SITE TO THE INSPECTING AUTHORITIES. ACCESS POINTS TO DAMPERS SHALL BE PERMANENTLY IDENTIFIED ON THE EXTERIOR BY A LABEL READING "SMOKE/FIRE DAMPER".

DETAILS SHOWN ARE FOR REFERENCE ONLY.

1. ACTUATOR (LOCATION MAY VARY). DAMPER MAY BE SUPPLIED WITHOUT ACTUATOR INSTALLED. SEE ACTUATOR INSTALLATION INSTRUCTIONS FOR FIELD MOUNTING OF DAMPER ACTUATORS.
2. FIRESTAT OR ELECTRONIC FUSE LINK (EFL)
3. AUXILLIARY OPERATING JACK SHAFT
4. FIRE/SMOKE DAMPER
5. OVER CENTER LOCK
6. DAMPER SLEEVE
7. CAULKING MATERIAL (MAY BE ON EITHER SIDE OF DAMPER FRAME)
8. PICTURE-FRAME OR CONVENTIONAL MOUNTING MOUNTING ANGLES, PER MFR'S INSTRUCTIONS. MIN 1" OVERLAP ON WALL ALL SIDES OF DAMPER
9. S-JOINT OR DUCTMATE CONNECTION TO DUCT
10. GRILLE/DIFFUSER, WHERE APPLICABLE

A. WHERE DAMPER IS LOCATED IN A SECURITY-BARRIER WALL, PROVIDE SECURITY BAR ACCESSORY OPTION, FACTORUY-INSTALLED BY DAMPER MFR. SECURITY BARS SHALL BE WELDED TO DAMPER SLEEVE AND SHALL NOT INVALIDATE THE DAMPER'S UL LISTED INSTALLATION. REFER TO SPECIFICATIONS FOR SECURITY BAR CONSTRUCTION DETAILS.

COMBINATION FIRE/SMOKE DAMPER INSTALLATION

SCALE : NONE

1
M501

Plot Date: 3/15/2021 11:15:10 PM
File Name: L:\Revit Local Files\EEO_DGS CCC Willits_Schedules_MP18_Central_jluvall(KTH47.rvt

IDENTIFICATION STAMP
DIV. OF THE STATE ARCHITECT
APP: 02-118630 INC:
REVIEWED FOR
SS ☐ FLS ☐ ACS ☑
DATE: 04/13/2021

OFFICE OF THE STATE FIRE MARSHAL
APPROVED FIRE AND PANIC ONLY
Approval of this plan does not authorize or approve any omission or deviation from applicable regulations. Final approval is subject to field inspection. One set of approved plans shall be available on the project site at all times.
PERMIT NO. 20-N-2332-CP
REVIEWED BY: LEO CATAYLO, OSFM
DATE: 4 / /2021

DGS GENERAL SERVICES
Department of General Services
State of California
Real Estate Services Division
Project Management & Development Branch
707 Third Street, Suite 4-105
West Sacramento, California 95605

NICHOLS MELBURG & ROSSETTO ARCHITECTS + ENGINEERS
300 Knollcrest Drive
Redding, CA. 96002
(530) 222-3300 (530) 222-3538 FAX
http://www.nmrdesign.com

Copyright © 2019
All ideas, designs, arrangements and plans indicated or represented by this drawing are owned by, and the property of, NICHOLS, MELBURG and ROSSETTO and were created, evolved and developed for use on, and in conjunction with, the specified project. None of such ideas, designs, arrangements or plans shall be used by, or disclosed to any person, firm or corporation for any purpose whatsoever without the written permission of NICHOLS, MELBURG and ROSSETTO.

LICENSE STAMPS

REGISTERED PROFESSIONAL ENGINEER
M 33498
EXPIRES 8/30/22
MECHANICAL
STATE OF CALIFORNIA
DATE SIGNED: 10-20-20

CONSULTANT

CAPITAL
ENGINEERING CONSULTANTS, INC.
RANCHO CORDOVA, CALIFORNIA
JD - HCJH — PM - DESIGN TEAM
181205.00 — PROJECT NO.

DRAWING STATUS
CONSTRUCTION DOCUMENTS

ISSUE

No.	Date	Description
1	10/22/2020	INITIAL PLAN REVIEW
2	01/22/2021	AGENCY RESUBMITTAL
3	03/22/2021	AGENCY RESUBMITTAL

If drawing is not 30" x 42" it is a reduced print

PROJECT
RESIDENTIAL CENTER, UKIAH: REPLACEMENT OF EXISTING RESIDENTIAL CENTER
440 EAST HILL ROAD
WILLITS, CALIFORNIA 95490
MENDOCINO COUNTY
CALIFORNIA CONSERVATION CORPS

Supervisor	Designed	Drawn
		Author

DSA Application No.
02-118630

SHEET TITLE
HVAC DETAILS

DGS Project Number	NMR Project Number
0000000000001826	18-6456

Sheet Scale
12" = 1'-0"

Sheet Number
M501

ISSUE DATE
July 9, 2021

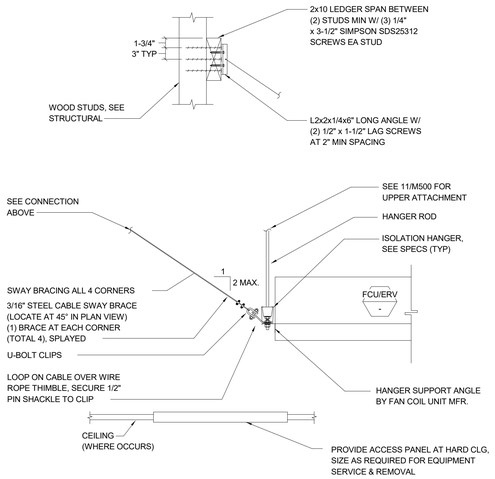

ALT. DUCTED FCU/ERV MOUNTING

5 M502

SCALE : NONE

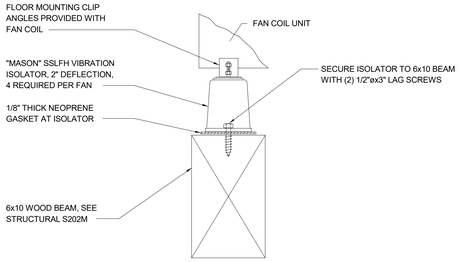

FCU BASE MOUNTING

6 M502

SCALE : NONE

Thermal Ceramics
FireMaster® FastWrap® XL
Access Door Systems
Commercial Kitchen Grease Duct Enclosure System

FireMaster F2-HT-XL3 Door System

NOTE: Available from Thermal Ceramics FireMaster Distributors.

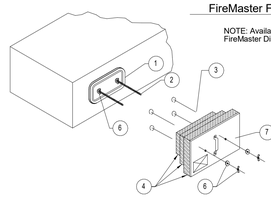

FireMaster Field Fabricated Door System

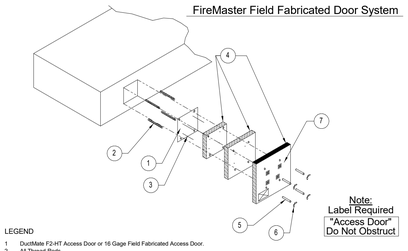

LEGEND
1 DuctMate F2-HT Access Door or 16 Gage Field Fabricated Access Door.
2 All Thread Rods.

LEGEND	
1	DuctMate F2-HT Access Door or 16 Gage Field Fabricated Access Door.
2	All Thread Rods.
3	Installation Pins with Speed Clips.
4	Three Layers of FireMaster FastWrap XL Blanket with Minimum 1" Overlaps and All Edges Sealed with Aluminum Tape.
5	Spool Pieces for Threaded Rods
6	Wing Nuts and Washers
7	Outer Cover Plate Labled "ACCESS DOOR - DO NOT OBSTRUCT"

The integrity of the duct wrap insulation product is limited to the quality of the installation

NOTE: DETAIL FOR REFERENCE ONLY. COMPLETE INSTALLATION SHALL BE PER MANUFACTURERS INSTRUCTIONS.

UL-LISTED DUCT ACCESS DOORS

2 M502

SCALE : NONE

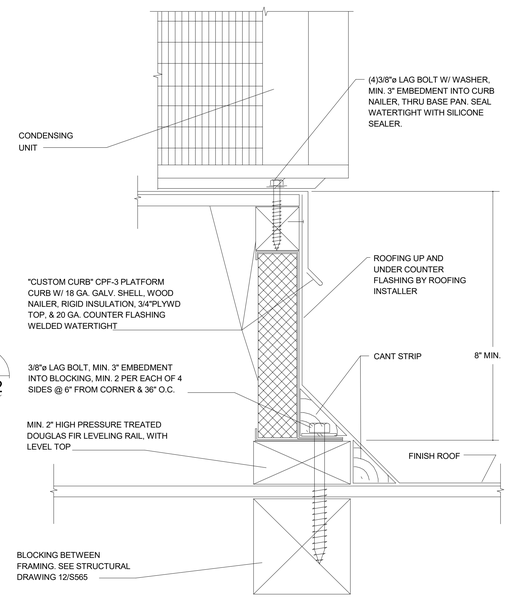

CONDENSING UNIT MOUNTING DETAIL

4 M502

SCALE : NONE

Thermal Ceramics
FireMaster® FastWrap® XL
Commercial Kitchen Grease Duct Enclosure System
Air Ventilation Duct Enclosure System
1 or 2 Hour Shaft Alternative / Zero Clearance to Combustibles

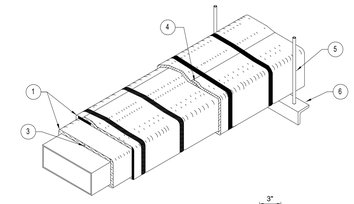

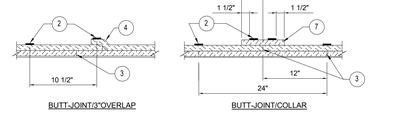

BUTT-JOINT/3"OVERLAP BUTT-JOINT/COLLAR

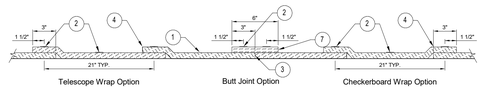

SINGLE LAYER OR OUTSIDE LAYER INSTALLATION OPTIONS

LEGEND	
1	Two Layers of FireMaster FastWrap XL Blanket for Grease Duct Enclosures One Layer of FireMaster FastWrap XL Blanket for Air Ventilation Duct Enclosures
2	Steel banding minimum 1/2" wide by 0.015" thick.
3	Tight butt joints on inner layer
4	Min. 3" overlap on perimeter and between adjacent blanket on outside layer
5	Min. 3/8" diameter hanger rod
6	Min. 2" x 2" x 1/8" angle for Grease Duct Enclosures Min. 1-1/2" x 1-1/2" x 1/8" angle or SMACNA Equivalent for Air Ventilation Duct Enclosures
7	Optional 6" FireMaster FastWrap XL collar

The integrity of Firemaster duct systems is limited to the quality of the installation.

NOTE: DETAIL FOR REFERENCE ONLY. COMPLETE INSTALLATION SHALL BE PER MANUFACTURERS INSTRUCTIONS.

UL LISTED GREASE DUCT WRAP

1 M502

SCALE : NONE

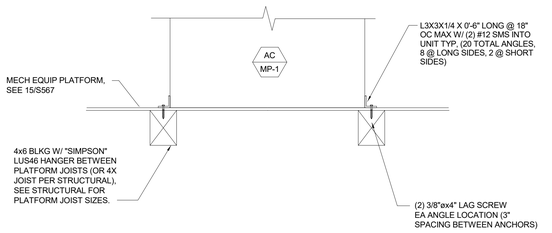

INDOOR AC UNIT MOUNTING

3 M502

SCALE : NONE

IDENTIFICATION STAMP
DIV. OF THE STATE ARCHITECT
APP: 02-118630 INC:
REVIEWED FOR
SS ☐ FLS ☐ ACS ☑
DATE: 04/13/2021

OFFICE OF THE STATE FIRE MARSHAL
APPROVED FIRE AND PANIC ONLY
Approval of this plan does not authorize or approve any omission or deviation from applicable regulations. Final approval is subject to field inspection. One set of approved plans shall be available on the project site at all times.
PERMIT NO. 20-N-2332-CP
REVIEWED BY: LEO CATAYLO, OSFM
DATE: 4/ /2021

DGS GENERAL SERVICES
Department of General Services
State of California
Real Estate Services Division
Project Management & Development Branch
707 Third Street, Suite 4-105
West Sacramento, California 95605

NICHOLS MELBURG & ROSSETTO ARCHITECTS + ENGINEERS
300 Knollcrest Drive
Redding, CA. 96002
(530) 222-3300 (530) 222-3538 FAX
http://www.nmrdesign.com

Copyright © 2019
All ideas, designs, arrangements and plans indicated or represented by this drawing are owned by, and the property of, NICHOLS, MELBURG and ROSSETTO and were created, evolved and developed for use on, and in conjunction with, the specified project. None of such ideas, designs, arrangements or plans shall be used by, or disclosed to any person, firm or corporation for any purpose whatsoever without the written permission of NICHOLS, MELBURG and ROSSETTO.

LICENSE STAMPS

REGISTERED PROFESSIONAL ENGINEER
KRISTY D. DAVIS
M 33498
EXPIRES 9/30/22
MECHANICAL
STATE OF CALIFORNIA
DATE SIGNED: 10-20-20

CONSULTANT

CAPITAL ENGINEERING CONSULTANTS, INC.
RANCHO CORDOVA, CALIFORNIA
JD - HCUH PM - DESIGN TEAM
181205.00 PROJECT NO.

DRAWING STATUS
CONSTRUCTION DOCUMENTS

ISSUE

No.	Date	Description
1	10/22/2020	INITIAL PLAN REVIEW
2	01/22/2021	AGENCY RESUBMITTAL
3	03/22/2021	AGENCY RESUBMITTAL

If drawing is not 30" x 42" it is a reduced print

PROJECT
RESIDENTIAL CENTER, UKIAH: REPLACEMENT OF EXISTING RESIDENTIAL CENTER
440 EAST HILL ROAD
WILLITS, CALIFORNIA 95490
MENDOCINO COUNTY
CALIFORNIA CONSERVATION CORPS

Supervisor	Designed	Drawn
		Author

DSA Application No.
02-118630

SHEET TITLE
HVAC DETAILS

DGS Project Number: 0000000000001826
NMR Project Number: 18-6456

Sheet Scale: 12" = 1'-0"
Sheet Number: M502

ISSUE DATE
July 9, 2021

Plot Date: 3/19/2021 1:18:11 PM
File Name: L:\Revit Local Files\CECI_DGS CCC Willits_Schedules_MP18_Central_jduval\KTH47.rvt

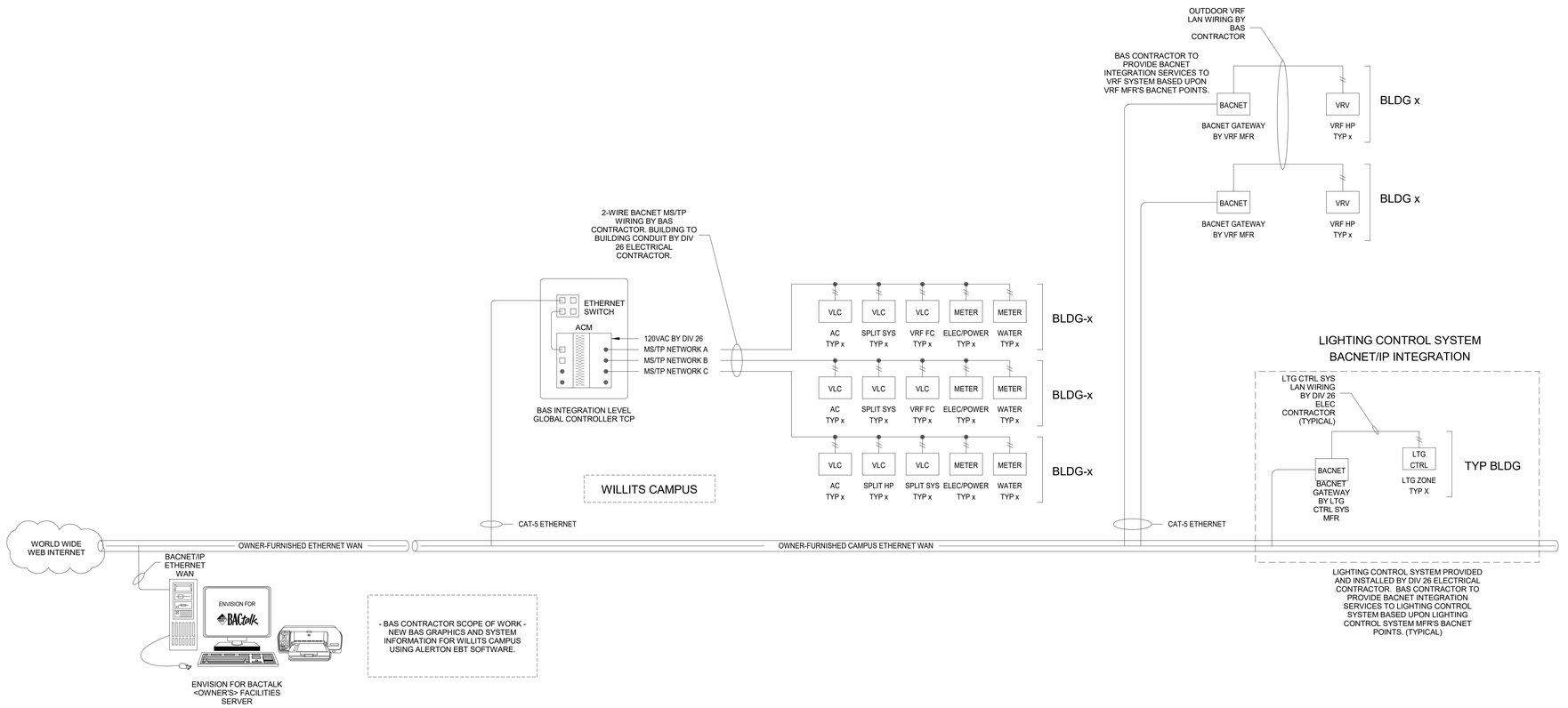

BACNET EMS SYSTEM ARCHITECTURE DIAGRAM

SCALE : NONE

1 M600

Exhaust Fan Operation
1. The exhaust fan will operate to maintain room temperature setpoint as sensed by wall mounted temp sensor.
2. Initial room temperature setpoint shall be 80°F (adjustable).
3. Monitoring - The following conditions shall be monitored by the EMS:
   a. Zone temp.
   b. Status of exhaust fan.
4. Alarm - If the exhaust fan fails to run while commanded to the on state, an alarm shall be displayed and annunciated at the operator's console.

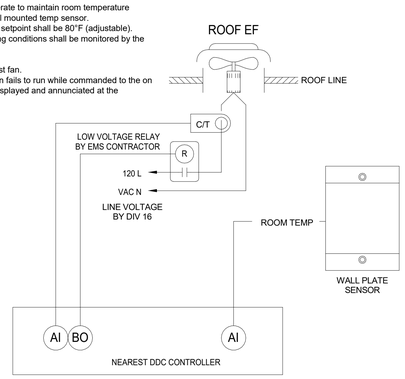

EF CONTROL VIA EMS ROOM TEMP SENSOR

SCALE : NONE

4 M-600

Exhaust Fan Operation
1. The exhaust fan will operate during normal building operating hours through EMS timeclock.
2. Monitoring - The following conditions shall be monitored:
   a. Status of exhaust fan.
3. Alarm - If the exhaust fan fan runs while commanded by the EMS to the off state or if it fails to run while commanded to the on state, an alarm shall be displayed and annunciated at the operator's console.

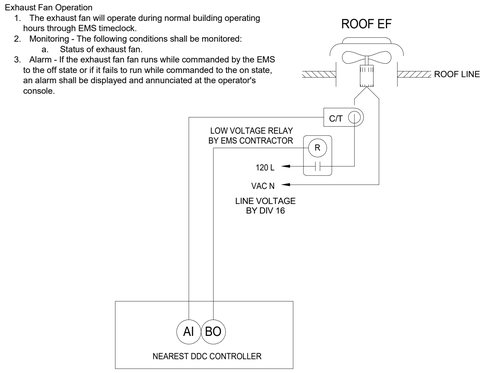

EF CONTROL VIA EMS SCHEDULE

SCALE : NONE

3 M600

Exhaust Fan Operation
1. The exhaust fan will be commanded by the EMS to operate in conjunction with the associated HVAC equipment as designated in the Mechanical Equipment Schedules.
2. Monitoring - The following conditions shall be monitored:
   a. Status of exhaust fan.
3. Alarm - If the exhaust fan fan runs while commanded by the EMS to the off state or if it fails to run while commanded to the on state, an alarm shall be displayed and annunciated at the operator's console.

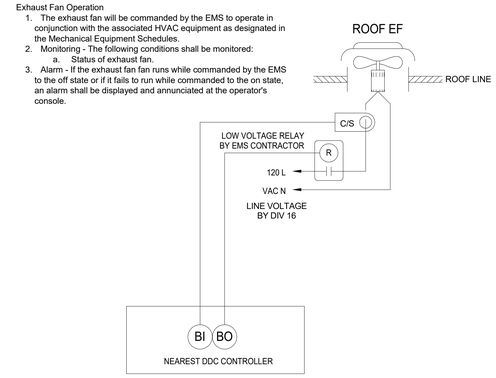

EF INTERLOCKED w/ HVAC UNIT

SCALE : NONE

2 M600

IDENTIFICATION STAMP
DIV. OF THE STATE ARCHITECT
APP: 02-118630 INC:
REVIEWED FOR
SS ☐ FLS ☐ ACS ☑
DATE: 04/13/2021

OFFICE OF THE STATE FIRE MARSHAL
APPROVED FIRE AND PANIC ONLY
Approval of this plan does not authorize or approve any omission or deviation from applicable regulations. Final approval is subject to field inspection. One set of approved plans shall be available on the project site at all times.
PERMIT NO. 20-N-2332-CP
REVIEWED BY: LEO CATAYLO, OSFM
DATE: 4 / /2021

GENERAL SERVICES
Department of General Services
State of California
Real Estate Services Division
Project Management & Development Branch
707 Third Street, Suite 4-105
West Sacramento, California 95605

NICHOLS MELBURG & ROSSETTO
ARCHITECTS + ENGINEERS
300 Knollcrest Drive
Redding, CA. 96002
(530) 222-3300 (530) 222-3538 FAX
http://www.nmrdesign.com

Copyright © 2019
All ideas, designs, arrangements and plans indicated or represented by this drawing are owned by, and the property of, NICHOLS, MELBURG and ROSSETTO and were created, evolved and developed for use on, and in conjunction with, the specified project. None of such ideas, designs, arrangements or plans shall be used by, or disclosed to any person, firm or corporation for any purpose whatsoever without the written permission of NICHOLS, MELBURG and ROSSETTO.

LICENSE STAMPS

REGISTERED PROFESSIONAL ENGINEER — M 33498 — EXPIRES 9/30/22 — MECHANICAL — STATE OF CALIFORNIA
DATE SIGNED: 10-20-20

CONSULTANT

CAPITAL ENGINEERING CONSULTANTS, INC.
RANCHO CORDOVA, CALIFORNIA
JD - HC/JH — PM - DESIGN TEAM
181205.00 — PROJECT NO.

DRAWING STATUS
CONSTRUCTION DOCUMENTS

ISSUE

No.	Date	Description
1	10/22/2020	INITIAL PLAN REVIEW
2	01/22/2021	AGENCY RESUBMITTAL
3	03/22/2021	AGENCY RESUBMITTAL

If drawing is not 30" x 42" it is a reduced print

PROJECT
RESIDENTIAL CENTER, UKIAH: REPLACEMENT OF EXISTING RESIDENTIAL CENTER
440 EAST HILL ROAD
WILLITS, CALIFORNIA 95490
MENDOCINO COUNTY
CALIFORNIA CONSERVATION CORPS

Supervisor	Designed	Drawn
		Author

DSA Application No.
02-118630

SHEET TITLE
HVAC CONTROLS

DGS Project Number: 00000000001826
NMR Project Number: 18-6456

Sheet Scale: 12" = 1'-0"
Sheet Number: M600

ISSUE DATE
July 9, 2021

Plot Date: 3/16/2021 11:15:11 PM
File Name: L:\Revit Local Files\DEC_DGS CCC Willits_Schedules_MP18_Central_JdvraKTH47.rvt

OPERABLE WINDOW INTERLOCK SCHEDULE				
BUILDING	FAN COIL #	ROOM #	NATURAL VENTILATION	OPEN WINDOW(S) FOR NAT. VENT.
ADMINISTRATION	FCU-A-1	A108	YES	1
ADMINISTRATION	FCU-A-2	A106	NO	-
ADMINISTRATION	FCU-A-3	A105	YES	1
ADMINISTRATION	FCU-A-5	A113	YES	1
ADMINISTRATION	FCU-A-6	A103	NO	-
ADMINISTRATION	FCU-A-7	A114	YES	1
ADMINISTRATION	FCU-A-8	A115	YES	1
ADMINISTRATION	FCU-A-10	A116	NO	-
ADMINISTRATION	FCU-A-11	A118	YES	1
ADMINISTRATION	FCU-A-12	A119	YES	2
COMET	FCU-C-1	C120,C121	NO	-
COMET	FCU-C-2	C102,C103,C104	NO	-
EDUCATION	FCU-E-1	E103	NO	-
EDUCATION	FCU-E-2	E104	NO	-
EDUCATION	FCU-E-3	E107	NO	-
EDUCATION	FCU-E-4	E110	YES	1
EDUCATION	FCU-E-5	E111	YES	1
EDUCATION	FCU-E-6	E112	YES	1
EDUCATION	FCU-E-7	E113	NO	-
EDUCATION	FCU-E-10	E121	NO	-
EDUCATION	FCU-E-11	E123	YES	1
EDUCATION	FCU-E-12	E126	YES	1
MEN'S HOUSING	FCU-HM-1	HM102	YES	2
MEN'S HOUSING	FCU-HM-2	HM103	YES	2
MEN'S HOUSING	FCU-HM-3	HM104	YES	2
MEN'S HOUSING	FCU-HM-5	HM115	YES	1
MEN'S HOUSING	FCU-HM-6	HM107	YES	1
WOMEN'S HOUSING	FCU-HW-1	HW402	YES	2
WOMEN'S HOUSING	FCU-HW-2	HW403	YES	2
WOMEN'S HOUSING	FCU-HW-3	HW404	YES	2
WOMEN'S HOUSING	FCU-HW-5	HW415	YES	1
WOMEN'S HOUSING	FCU-HW-6	HW407	YES	1
RECREATION	FCU-R-1	R102,R104	NO	-
RECREATION	FCU-R-3	R110	NO	-
RECREATION	FCU-R-4	R115	YES	1
RECREATION	FCU-R-5	R116	YES	2
RECREATION	FCU-R-6	R121	NO	-
RECREATION	FCU-R-7	R122	NO	-
RECREATION	FCU-R-8	R119	NO	-
WAREHOUSE	FCU-W-3	W122	NO	-
WAREHOUSE	FCU-W-5	W124	YES	3

VRV Fan Coil Unit

1. System Overview
   a. Each VRV Fan Coil unit will be directly controlled by its own dedicated EMS (Energy Management System) unitary controller.
   b. EMS unitary controller will be connected to a wall mounted electronic zone temperature sensor with integral relative humidity sensor.
   c. Electronic zone temperature sensor shall have a touch screen LCD interface which includes: 1) digital pushbuttons for warmer/cooler setpoint control; 2) visual display of room temperature, room humidity and ambient OSA temperature; and 3) digital pushbutton after-hours override timer control, with user adjustable duration. The after-hours override duration shall have the ability to be limited from the front-end.

2. Unit Fan Operation
   a. When the zone is in Occupied Mode or in Afterhours Mode, the fan shall run continuously.
   b. During the Unoccupied Mode as determined by EMS time schedule, the unit fan cycles with demand and the temperature is controlled by the unoccupied space temperature heating and cooling setpoints.

3. Automatic Demand Reduction Controls
   a. EMS shall be programmed with capability to implement centralized demand shed for all non-critical zones upon call for Automatic Demand Reduction. Critical zones shall not be impacted by demand shed conservation measures.

4. Zone Pre-Occupancy Purge
   a. The EMS shall schedule the zone to be in Occupied Mode one hour prior to the actual time of anticipated occupancy.

5. Heating operation
   a. The controller compares the heating setpoint with the space temperature and determines a need-heating control signal to engage VRV Fan Coil unit heating to maintain the room set point.

6. Cooling operation
   a. The controller compares the cooling setpoint with the space temperature and determines a need-cooling control signal to engage VRV Fan Coil unit cooling to maintain the room set point.

7. Monitoring - The following conditions shall be monitored and displayed at EMS Operator Workstation/Graphical User Interface:
   a. Supply air temperature.
   b. Room temperature.
   c. Room humidity.
   d. Current mode (heating/cooling/fan).
   e. Supply air temperature attained last time unit was in heating.
   f. Supply air temperature attained last time unit was in cooling.
   g. Current command status of fan, cooling and heating.
   h. Run time meters on fan.
   i. Unit Alarm.

8. Window Interlocks
   a. The window switch shall be interlocked with the DDC controller, upon any window in the zone opening the DDC controller shall change the setpoints of the interlocked fan coil to 55 deg F (heating) and 90 deg F (cooling).
   b. For zones indicated for natural ventilation, when the required number of window(s) has been opened, the fan coil shall shut off entirely.
   c. Upon all operable window(s) in a fan coil zone closing, the DDC controller shall turn on the fan coil if it was shut off for natural ventilation and change setpoints back to scheduled thermostat setpoints.
   d. Operable windows shall be equipped with a magnetic read switch to provide indication of open/closed status of the window.

OCCUPIED MODE SET POINTS: 76 DEG F COOLING, 72 DEG F HEATING

UNOCCUPIED MODE SET POINTS: 85 DEG F COOLING, 55 DEG F HEATING

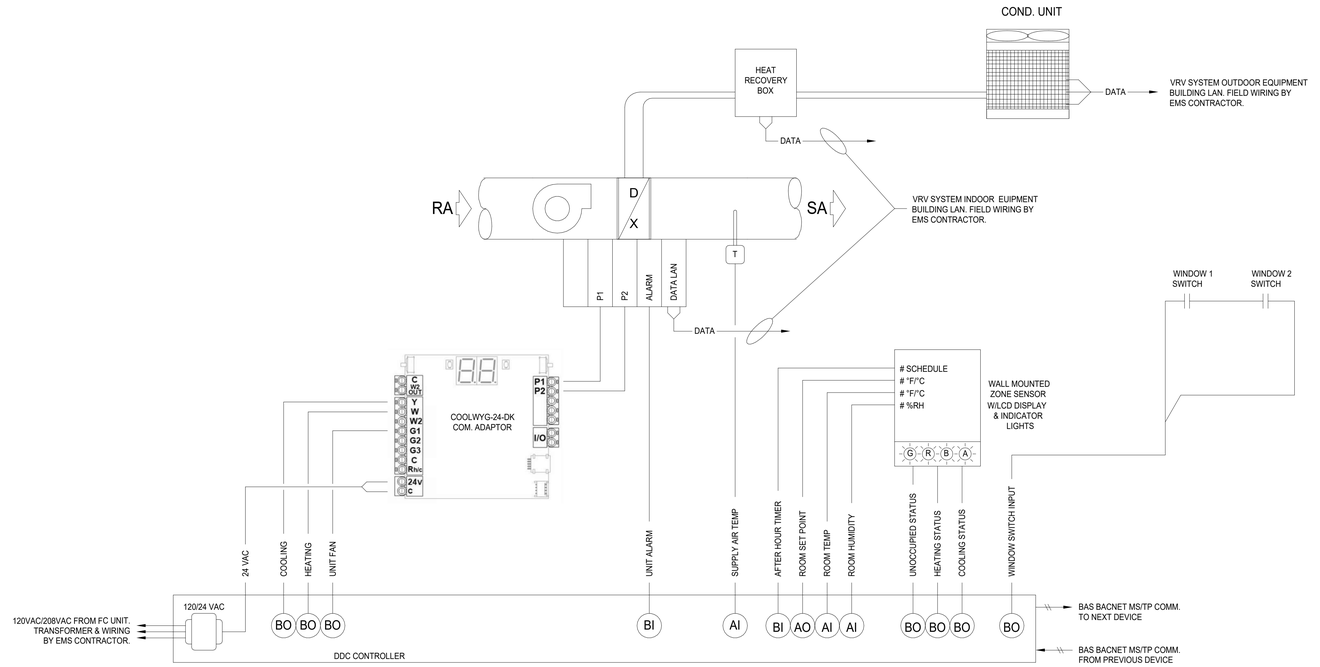

VRF FAN COIL UNIT CONTROL DIAGRAM

SCALE : NONE

1 M601

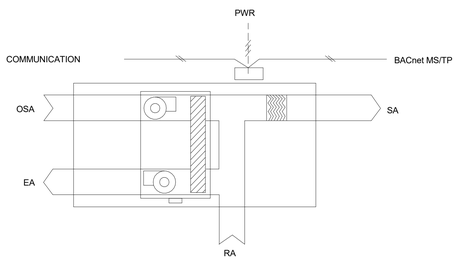

SEQUENCE OF OPERATIONS

ERV SHALL BE ENABLED WHEN VRF FC SYSTEM IS ENABLED TO PROVIDE NEEDED OUT SIDE AIR REQUIREMENTS. ERV UNIT SHALL BE FACTORY CONTROLLED TO MAINTAIN OPTIMUM ENERGY EFFICIENCY.

ERV SHALL HAVE BACNET INTERFACE AND SHALL BE INTEGRATED WITH ALERTON BUILDING CONTROL SYSTEM.

ENERGY RECOVERY VENTILATOR CONTROL

SCALE : NONE

6 M601

Exhaust Fan Operation

1. The exhaust fan will operate during normal building operating hours through EMS timeclock.
2. Fan Speed Control - the fan speed shall be modulated through it's EMC motor input from the manufacturer-provided MEC-24 Modulating Fan Controller, varying fan speed to maintain dryer exhaust manifold pressure. EMS shall monitor fan status.
3. Monitoring - The following conditions shall be monitored:
   a. Status of exhaust fan.
3. Alarm - If the exhaust fan fan runs while commanded by the EMS to the off state or if it fails to run while commanded to the on state, an alarm shall be displayed and annunciated at the operator's console.

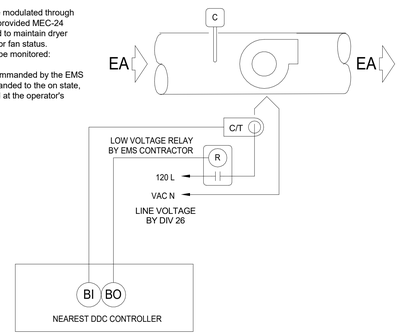

DRYER EXHAUST FAN CONTROL

SCALE : NONE

4 M601

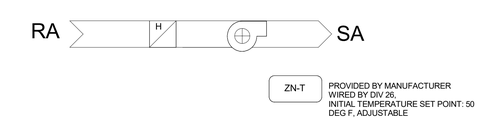

HEATING CONTROL:
THE UNIT WILL BE PROVIDED WITH ITS OWN INTERNAL CONTROLS AND WILL CONTROL FOR A ZONE TEMPERATURE SET POINT. THE MANUFACTURER SHALL PROVIDE A ZONE THERMOSTAT WIRED BY DIV 26.

THERE IS NO MONITORING OR CONTROL BY THE BMS.

ELECTRIC UNIT HEATER CONTROL

SCALE : NONE

5 M601

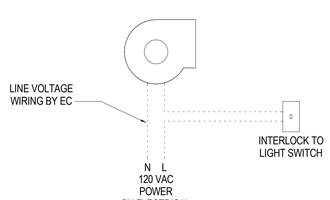

OPERATING SEQUENCE:
FAN SHALL BE WIRED FOR INTERLOCK WITH ROOM LIGHT SWITCH.
FAN SHALL TURN ON/OFF WITH LIGHTS.

EF CONTROL VIA LIGHT SWITCH INTERLOCK

SCALE : NONE

3 M601

Intake / Relief Hood Operation

1. The 2-position Intake / Relief damper will be commanded open by the EMS in conjunction with its associated HVAC equipment. See interlock schedule below.
2. The EMS shall close the Intake / Relief damper any time its associated HVAC equipment is scheduled OFF.
3. Alarm - If the Intake / Relief damper fails to open or close when commanded to do so, an alarm shall be displayed and annunciated at the operator's console.

INTAKE / RELIEF HOOD INTERLOCK SCHEDULE	
HOOD	ASSOCIATED HVAC EQUIP
GV-A-1	SF-A-1
GV-A-2	RF-A-1
GV-A-3	EF-A-2
GV-R-2	EF-R-3

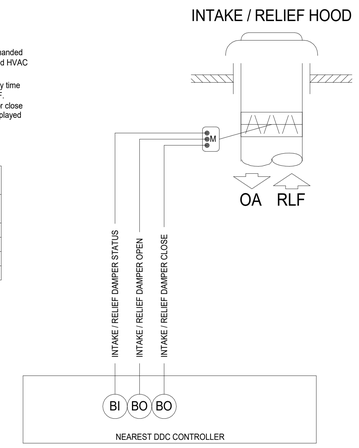

INTAKE HOOD / RELIEF HOOD CONTROL DIAGRAM

SCALE : NONE

2 M601

IDENTIFICATION STAMP
DIV. OF THE STATE ARCHITECT
APP: 02-118630 INC:
REVIEWED FOR
SS ☐ FLS ☐ ACS ☑
DATE: 04/13/2021

OFFICE OF THE STATE FIRE MARSHAL
APPROVED FIRE AND PANIC ONLY
Approval of this plan does not authorize or approve any omission or deviation from applicable regulations. Final approval is subject to field inspection. One set of approved plans shall be available on the project site at all times.
PERMIT NO. 20-N-2332-CP
REVIEWED BY: LEO CATAYLO, OSFM
DATE: 4 / /2021

DGS GENERAL SERVICES
Department of General Services
State of California
Real Estate Services Division
Project Management & Development Branch
707 Third Street, Suite 4-105
West Sacramento, California 95605

NICHOLS MELBURG & ROSSETTO ARCHITECTS + ENGINEERS
300 Knollcrest Drive
Redding, CA. 96002
(530) 222-3300 (530) 222-3538 FAX
http://www.nmrdesign.com

Copyright © 2019
All ideas, designs, arrangements and plans indicated or represented by this drawing are owned by, and the property of, NICHOLS, MELBURG and ROSSETTO and were created, evolved and developed for use on, and in conjunction with, the specified project. None of such ideas, designs, arrangements or plans shall be used by, or disclosed to any person, firm or corporation for any purpose whatsoever without the written permission of NICHOLS, MELBURG and ROSSETTO.

LICENSE STAMPS

REGISTERED PROFESSIONAL ENGINEER
M 33498
EXPIRES 9/30/22
MECHANICAL
STATE OF CALIFORNIA
DATE SIGNED: 10-20-20

CONSULTANT

CAPITAL ENGINEERING CONSULTANTS, INC.
RANCHO CORDOVA, CALIFORNIA
JD - HC/JH — PM - DESIGN TEAM
181205.00 — PROJECT NO.

DRAWING STATUS
CONSTRUCTION DOCUMENTS

ISSUE

No.	Date	Description
1	10/22/2020	INITIAL PLAN REVIEW
2	01/22/2021	AGENCY RESUBMITTAL
3	03/22/2021	AGENCY RESUBMITTAL

If drawing is not 30" x 42" it is a reduced print

PROJECT
RESIDENTIAL CENTER, UKIAH: REPLACEMENT OF EXISTING RESIDENTIAL CENTER
440 EAST HILL ROAD
WILLITS, CALIFORNIA 95490
MENDOCINO COUNTY
CALIFORNIA CONSERVATION CORPS

Supervisor	Designed	Drawn
		Author

DSA Application No.
02-118630

SHEET TITLE
HVAC CONTROLS

DGS Project Number: 00000000001826
NMR Project Number: 18-6456

Sheet Scale: 12" = 1'-0"
Sheet Number: M601

ISSUE DATE
July 9, 2021

Plot Date: 3/18/2021 11:19:11 PM
File Name: L:\Revit Local Files\DEC_DGS CCC Willits_Schedules_MP18_Central_JdvraKTH47.rvt

Heat Pump Unit

1. System Overview
   a. Each Heat Pump unit will be directly controlled by its own dedicated EMS (Energy Management System) unitary controller.
   b. EMS unitary controller will be connected to a wall mounted electronic zone temperature sensor with integral relative humidity sensor.
   c. Electronic zone temperature sensor shall have a touch screen LCD interface which includes: 1) digital pushbuttons for warmer/cooler setpoint control; 2) visual display of room temperature, room humidity and ambient OSA temperature; and 3) digital pushbutton after-hours override timer control, with user adjustable duration. The after-hours override duration shall have the ability to be limited from the front-end.

2. Unit Fan Operation
   a. When the zone is in Occupied Mode or in Afterhours Mode, the fan shall run continuously.
   b. During the Unoccupied Mode as determined by EMS time schedule, the unit fan cycles with demand and the temperature is controlled by the unoccupied space temperature heating and cooling setpoints.

3. Automatic Demand Reduction Controls
   a. EMS shall be programmed with capability to implement centralized demand shed for all non-critical zones upon call for Automatic Demand Reduction. Critical zones shall not be impacted by demand shed conservation measures.

4. Zone Pre-Occupancy Purge
   a. The EMS shall schedule the zone to be in Occupied Mode one hour prior to the actual time of anticipated occupancy.

5. Heating operation
   a. The controller compares the heating setpoint with the space temperature and determines a need-heating control signal to engage the compressor and reversing valve (according to Heat Pump Unit manufacturer's instruction for heating cycle) to maintain the room set point.
   b. If further heating is required after compressor/reversing valve heating is active for 15 minutes (adjustable), engage auxiliary electric heat.

6. Cooling operation
   a. The controller compares the cooling setpoint with the space temperature and determines a need-cooling signal.
   b. The controller will enable the compressor and reversing valve (according to Heat Pump Unit manufacturer's instruction for cooling cycle) to maintain the room set point.

7. Monitoring - The following conditions shall be monitored and displayed at EMS Operator Workstation/Graphical User Interface:
   a. Supply air temperature.
   b. Room temperature.
   c. Room humidity.
   d. Current mode (heating/cooling/fan).
   e. Supply air temperature attained last time unit was in heating.
   f. Supply air temperature attained last time unit was in cooling.
   g. Current command status of fan, compressor, reversing valve and aux heat.
   h. Run time meters on fan, compressor, reversing valve and aux heat.

OCCUPIED MODE SET POINTS: 70 DEG F COOLING, 65 DEG F HEATING
UNOCCUPIED MODE SET POINTS: 70 DEG F COOLING, 50 DEG F HEATING

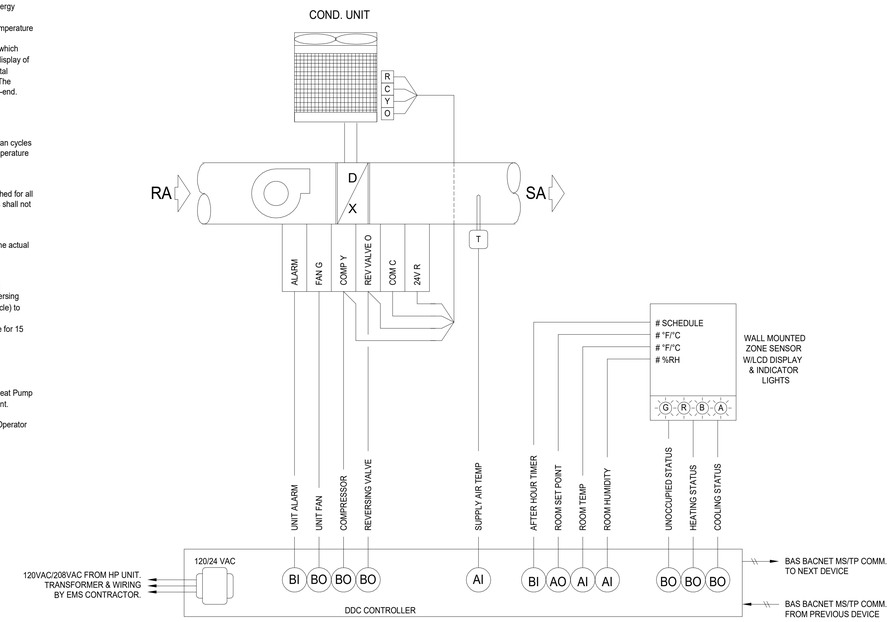

DUCTLESS SPLIT SYSTEM HEAT PUMP UNIT CONTROL DIAGRAM

1
M602

SCALE : NONE

Ductless Split System - Cooling Only

1. System Overview
   a. Each AC unit will be directly controlled by its own dedicated EMS (Energy Management System) unitary controller.
   b. EMS unitary controller will be connected to a wall mounted stainless steel wall plate zone temperature sensor.
2. Unit Fan Operation
   a. The fan shall run continuously as the zone requires cooling operation 24/7.
3. Cooling operation
   a. The controller compares the cooling setpoint with the space temperature and determines a need-cooling signal to stage the compressor as necessary to maintain zone set point.
   b. The zone set point shall be set from the EMS Operator's Workstation and is set to 80°F (adjustable).
   c. An alarm shall be broadcast through the EMS should the zone temperature rise above zone set point by 2°F for more than 5 minutes (adjustable).
4. Monitoring - The following conditions shall be monitored and displayed at EMS Operator Workstation/Graphical User Interface:
   a. Zone temperature.
   b. Current mode (cooling/fan).
   c. Supply air temperature attained last time unit was in cooling.
   d. Current command status of fan and compressor.
   e. Run time meters on fan and compressor.

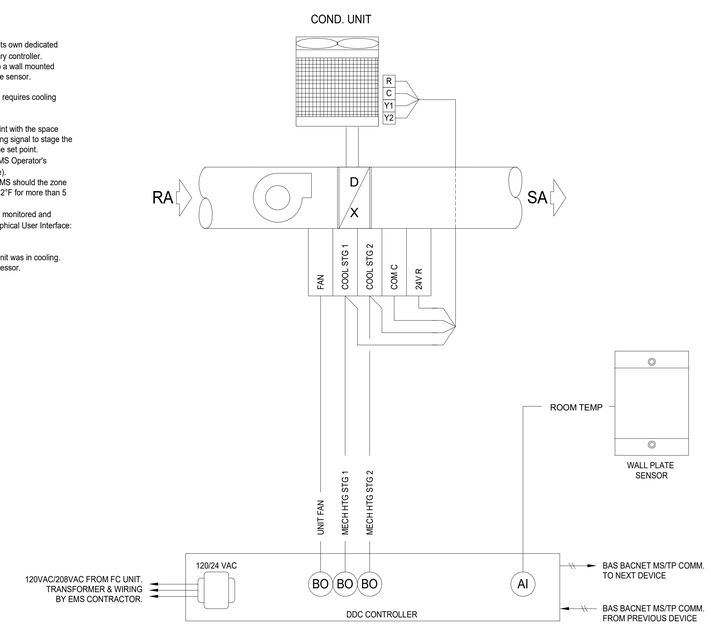

DUCTLESS COOLING ONLY SPLIT SYSTEM AC UNIT CONTROL DIAGRAM

2
M602

SCALE : NONE

IDENTIFICATION STAMP
DIV. OF THE STATE ARCHITECT
APP: 02-118630 INC:
REVIEWED FOR
SS ☐ FLS ☐ ACS ☑
DATE: 04/13/2021

OFFICE OF THE STATE FIRE MARSHAL
APPROVED FIRE AND PANIC ONLY
Approval of this plan does not authorize or approve any omission or deviation from applicable regulations. Final approval is subject to field inspection. One set of approved plans shall be available on the project site at all times.
PERMIT NO. 20-N-2332-CP
REVIEWED BY: LEO CATAYLO, OSFM
DATE: 4 / /2021

DGS GENERAL SERVICES
Department of General Services
State of California
Real Estate Services Division
Project Management & Development Branch
707 Third Street, Suite 4-105
West Sacramento, California 95605

NICHOLS MELBURG & ROSSETTO ARCHITECTS + ENGINEERS
300 Knollcrest Drive
Redding, CA. 96002
(530) 222-3300 (530) 222-3538 FAX
http://www.nmrdesign.com

Copyright © 2019
All ideas, designs, arrangements and plans indicated or represented by this drawing are owned by, and the property of, NICHOLS, MELBURG and ROSSETTO and were created, evolved and developed for use on, and in conjunction with, the specified project. None of such ideas, designs, arrangements or plans shall be used by, or disclosed to any person, firm or corporation for any purpose whatsoever without the written permission of NICHOLS, MELBURG and ROSSETTO.

LICENSE STAMPS

REGISTERED PROFESSIONAL ENGINEER
M 33498
EXPIRES 9/30/22
MECHANICAL
STATE OF CALIFORNIA
DATE SIGNED: 10-20-20

CONSULTANT

CAPITAL
ENGINEERING CONSULTANTS, INC.
RANCHO CORDOVA, CALIFORNIA
JD - HC/JH — PM - DESIGN TEAM
181205.00 — PROJECT NO.

DRAWING STATUS
CONSTRUCTION DOCUMENTS

ISSUE

No.	Date	Description
1	10/22/2020	INITIAL PLAN REVIEW
2	01/22/2021	AGENCY RESUBMITTAL
3	03/22/2021	AGENCY RESUBMITTAL

If drawing is not 30" x 42" it is a reduced print

PROJECT
RESIDENTIAL CENTER, UKIAH: REPLACEMENT OF EXISTING RESIDENTIAL CENTER
440 EAST HILL ROAD
WILLITS, CALIFORNIA 95490
MENDOCINO COUNTY
CALIFORNIA CONSERVATION CORPS

Supervisor	Designed	Drawn
		Author

DSA Application No.
02-118630

SHEET TITLE
HVAC CONTROLS

DGS Project Number: 0000000000001826
NMR Project Number: 18-6456

Sheet Scale: 12" = 1'-0"
Sheet Number: M602

ISSUE DATE
July 9, 2021

Plot Date: 3/18/2021 11:15:12 PM
File Name: L:\Revit Local Files\DEC_DGS CCC Willits_Schedules_MP18_Central_jdovak\KTH47.rvt

Single Zone VAV Packaged AC Unit with Economizer, Automatic Shutdown, Power Exhaust & Demand Control Ventilation

1. System Overview
   a. Each AC unit will be directly controlled by its own dedicated EMS (Energy Management System) unitary controller.
   b. EMS unitary controller will be connected to a wall mounted electronic zone temperature sensor with integral relative humidity sensor and CO2 sensor.
   c. Electronic zone temperature sensor shall have a touch screen LCD interface which includes: 1) digital pushbuttons for warmer/cooler setpoint control; 2) visual display of room temperature, room humidity, room CO2 and ambient OSA temperature; and 3) digital pushbutton after-hours override timer control, with user adjustable duration. The after-hours override duration shall have the ability to be limited from the front-end.
2. Unit Fan Operation
   a. When the zone is in Occupied Mode or in Afterhours Mode, the fan shall run continuously.
   b. During the Unoccupied Mode as determined by EMS time schedule, the unit fan cycles with demand and the temperature is controlled by the unoccupied space temperature heating and cooling setpoints.
3. Minimum Outdoor Air Ventilation
   a. During Occupied Mode or Afterhours Mode, the economizer damper and supply fan VFD shall be commanded by the EMS unitary controller to maintain positions which satisfy the Minimum Outdoor Air ventilation requirements for the zone. When supply fan speed is at less than 100%, the EMS unitary controller shall modulate the economizer damper open further, so as to maintain Minimum Outdoor Air ventilation requirements. Damper position(s) determined by Air Balancing Contractor.
4. Demand Control Ventilation
   a. EMS unitary controller will be connected to a wall mounted CO2 sensor to monitor zone CO2 concentration.
   b. During Occupied Mode or Afterhours Mode, the EMS unitary controller shall reset the outside air damper minimum position as needed to maintain the CO2 concentration below 1,000 ppm. If CO2 concentration exceeds set point by 10% then an alarm shall be generated via the EMS.
5. Automatic Demand Reduction Controls
   a. EMS shall be programmed with capability to implement centralized demand shed for all non-critical zones upon call for Automatic Demand Reduction.
   b. Critical zones shall not be impacted by demand shed conservation measures. Critical zones served by this AC unit include: None.
6. Zone Pre-Occupancy Purge
   a. The EMS shall schedule the zone to be in Occupied Mode one hour prior to the actual time of anticipated occupancy.
7. Heating operation
   a. The controller compares the heating setpoint with the space temperature and determines a need-heating control signal to stage a gas regulating valve on the unit.
   b. During heating mode, reset the supply fan VFD speed to lowest possible value in order to maintain space temperature setpoint.
   c. Economizer to be commanded to Min CFM setpoint and mechanical cooling to be locked out during heating mode.
8. Cooling operation
   a. The controller compares the cooling setpoint with the space temperature and determines a need-cooling signal.
   b. During cooling mode, reset the supply fan VFD speed to lowest possible value in order to maintain space temperature setpoint.
   c. A call for cooling shall enable the economizer to provide free cooling for as long as possible.
   d. Should economizer not provide adequate cooling capacity, EMS unitary controller will engage mechanical cooling. First stage mechanical cooling consists of first stage DX compressor(s).
   e. If further cooling is required to meet demand for cooling, EMS unitary controller will engage second stage DX compressor(s) accordingly.
   f. Mechanical heating to be locked out during cooling mode.
9. Automatic Shutdown (Smoke Detection)
   a. Upon receiving a signal from the fire alarm system (equiped with total coverage smoke detection system), the AC Unit shall shut down via hardwire interlock.
10. Power Exhaust
    a. All Power Exhaust fan operations shall be controlled by separate non-EMS external devices as provided by the AC Unit Manufacturer. End switch shall enable power exhaust to operate when OA damper opens up.
11. Fault Detection Diagnostics
    a. The EMS DDC Controller shall monitor the following economizer actuator Fault Detection Diagnostic conditions and broadcast results via EMS network:
       i. Temperature Sensor Failure/Fault.
       ii. Economizer not economizing when enabled.
       iii. Economizer economizing when disabled.
       iv. Economizer damper modulation failure.
       v. Excess outdoor air.
12. Monitoring - The following conditions shall be monitored and displayed at EMS Operator Workstation/Graphical User Interface:
    a. Supply air temperature.
    b. Room temperature.
    c. Room humidity.
    d. Room CO2 concentration.
    e. Current mode (heating/cooling/fan).
    f. Supply air temperature attained last time unit was in heating.
    g. Supply air temperature attained last time unit was in cooling.
    h. Current command status of fan, economizer, compressor and gas valve.
    i. Run time meters on fan, compressor, and heat.
    j. Fan Status thru Current Switch.
    k. Economizer actuator feedback status.

OCCUPIED MODE SET POINTS: 76 DEG F COOLING, 72 DEG F HEATING

UNOCCUPIED MODE SET POINTS: 85 DEG F COOLING, 55 DEG F HEATING

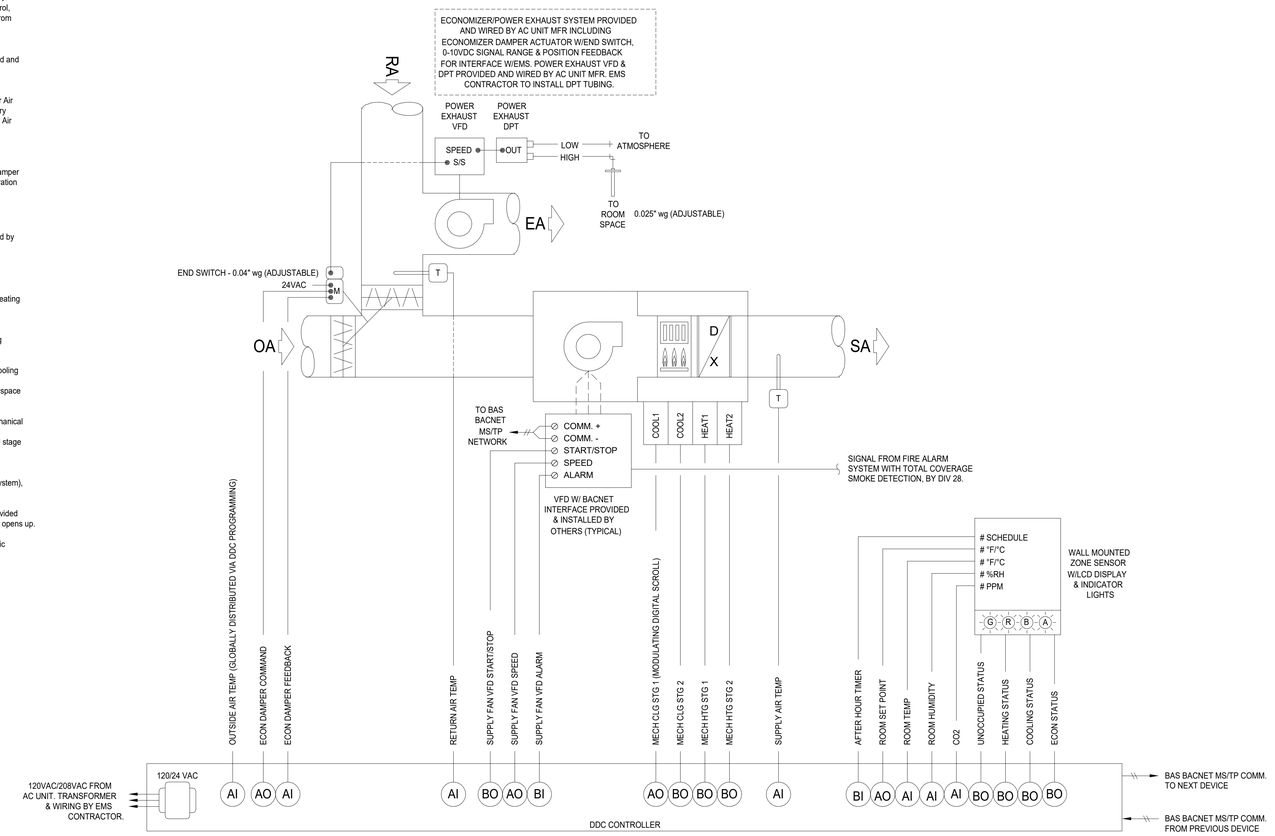

AC UNIT CONTROL DIAGRAM

SCALE : NONE

1
M603

Plot Date: 3/18/2021 1:18:12 PM
File Name: L:\Revit Local Files\CECI_DGS CCC Willits_Schedules_MP18_Central_jduvall\KTH47.rvt

IDENTIFICATION STAMP
DIV. OF THE STATE ARCHITECT
APP: 02-118630 INC:
REVIEWED FOR
SS ☐ FLS ☐ ACS ☑
DATE: 04/13/2021

OFFICE OF THE STATE FIRE MARSHAL
APPROVED FIRE AND PANIC ONLY
Approval of this plan does not authorize or approve any omission or deviation from applicable regulations. Final approval is subject to field inspection. One set of approved plans shall be available on the project site at all times.
PERMIT NO. 20-N-2332-CP
REVIEWED BY: LEO CATAYLO, OSFM
DATE: 4 / /2021

GENERAL SERVICES
Department of General Services
State of California
Real Estate Services Division
Project Management & Development Branch
707 Third Street, Suite 4-105
West Sacramento, California 95605

NICHOLS MELBURG & ROSSETTO ARCHITECTS + ENGINEERS
300 Knollcrest Drive
Redding, CA. 96002
(530) 222-3300 (530) 222-3538 FAX
http://www.nmrdesign.com

Copyright © 2019
All ideas, designs, arrangements and plans indicated or represented by this drawing are owned by, and the property of, NICHOLS, MELBURG and ROSSETTO and were created, evolved and developed for use on, and in conjunction with, the specified project. None of such ideas, designs, arrangements or plans shall be used by, or disclosed to any person, firm or corporation for any purpose whatsoever without the written permission of NICHOLS, MELBURG and ROSSETTO.

LICENSE STAMPS

REGISTERED PROFESSIONAL ENGINEER
M 33498
EXPIRES 9/30/22
MECHANICAL
STATE OF CALIFORNIA
DATE SIGNED: 10-20-20

CONSULTANT

CAPITAL
ENGINEERING CONSULTANTS, INC.
RANCHO CORDOVA, CALIFORNIA
JD - HC/JH PM - DESIGN TEAM
181205.00 PROJECT NO.

DRAWING STATUS
CONSTRUCTION DOCUMENTS

ISSUE

No.	Date	Description
1	10/22/2020	INITIAL PLAN REVIEW
2	01/22/2021	AGENCY RESUBMITTAL
3	03/22/2021	AGENCY RESUBMITTAL

If drawing is not 30" x 42" it is a reduced print

PROJECT
RESIDENTIAL CENTER, UKIAH: REPLACEMENT OF EXISTING RESIDENTIAL CENTER
440 EAST HILL ROAD
WILLITS, CALIFORNIA 95490
MENDOCINO COUNTY
CALIFORNIA CONSERVATION CORPS

Supervisor	Designed	Drawn
		Author

DSA Application No.
02-118630

SHEET TITLE
HVAC CONTROLS

DGS Project Number
0000000000001826

NMR Project Number
18-6456

Sheet Scale
12" = 1'-0"

Sheet Number
M603

ISSUE DATE
July 9, 2021

1. Make Up Air Unit will be directly controlled by its own dedicated EMS unitary controller.
2. The unitary controller will be connected to a wall mounted electronic temperature sensor with LED or LCD display and push buttons for warmer, cooler, OSA temperature, room temperature, room set point, and after-hours override timer.
3. Outside air damper shall be commanded 100% open any time MAU is in cooling mode. The outside air damper shall be commanded to the minimum OA position (1150 CFM) when in heating mode with no kitchen exhaust fans running. The outside air damper shall be modulated from the minimum outside air position to 100% open when the MAU is in heating mode as required to offset exhaust air quantities based on signals to the EMS determining which kitchen exhaust fans are running. The outside air damper shall be commanded 100% open when all kitchen exhaust fans are running. The outside air damper shall be commanded 100% closed any time MAU is not in operation.
4. Heating operation: The unitary controller compares the heating setpoint with the space temperature and determines a heating control signal to engage the gas furnace heating section to maintain space temperature setpoint.
5. Cooling operation: The unitary controller compares the cooling setpoint with the space temperature and determines a cooling signal. Upon a call for cooling the unitary controller shall command the 1st stage cooling on. If the cooling setpoint is still not met the unitary controller shall command the 2nd stage cooling on.
6. Supply fan speed: When the MAU is on the supply fan speed will be controlled via the supply fan VFD. Supply air flow shall be modulated from the minimum supply air setting (5300 CFM) when no kitchen exhaust fans are running to 16000 CFM when all kitchen exhaust fans are running. Controller shall monitor interlocked exhaust fans and space pressure sensor and adjust fan speed accordingly to provide required make-up air.

Single Zone VAV Packaged AC Unit with Economizer, Automatic Shutdown & Power Exhaust

1. System Overview
   a. Each AC unit will be directly controlled by its own dedicated EMS (Energy Management System) unitary controller.
   b. EMS unitary controller will be connected to a wall mounted electronic zone temperature sensor with integral relative humidity sensor and CO2 sensor.
   c. Electronic zone temperature sensor shall have a touch screen LCD interface which includes: 1) digital pushbuttons for warmer/cooler setpoint control; 2) visual display of room temperature, room humidity, room CO2 and ambient OSA temperature; and 3) digital pushbutton after-hours override timer control, with user adjustable duration. The after-hours override duration shall have the ability to be limited from the front-end.
2. Unit Fan Operation
   a. When the zone is in Occupied Mode or in Afterhours Mode, the fan shall run continuously.
   b. During the Unoccupied Mode as determined by EMS time schedule, the unit fan cycles with demand and the temperature is controlled by the unoccupied space temperature heating and cooling setpoints.
3. Minimum Outdoor Air Ventilation
   a. During Occupied Mode or Afterhours Mode, the economizer damper and supply fan VFD shall be commanded by the EMS unitary controller to maintain positions which satisfy the Minimum Outdoor Air ventilation requirements for the zone. When supply fan speed is at less than 100%, the EMS unitary controller shall modulate the economizer damper open further, so as to maintain Minimum Outdoor Air ventilation requirements. Damper position(s) determined by Air Balancing Contractor.
4. Kitchen Exhaust Air Make-up
   a. EMS unitary controller shall reset the economizer OSA damper position to provide required make-up air when the kitchen exhaust hood is switched "ON", as seen by a current switch contact closure.
   b. Whenever a kitchen exhaust hood is switched "ON", the AC Unit shall be automatically enabled, if not already running, to provide make-up air.
5. Automatic Demand Reduction Controls
   a. EMS shall be programmed with capability to implement centralized demand shed for all non-critical zones upon call for Automatic Demand Reduction.
   b. Critical zones shall not be impacted by demand shed conservation measures. Critical zones served by this AC unit include: None.
6. Zone Pre-Occupancy Purge
   a. The EMS shall schedule the zone to be in Occupied Mode one hour prior to the actual time of anticipated occupancy.
7. Heating operation
   a. The controller compares the heating setpoint with the space temperature and determines a need-heating control signal to modulate a 0-10vdc gas regulating valve on the unit.
   b. During heating mode, reset the supply fan VFD speed to lowest possible value in order to maintain space temperature setpoint.
   c. Economizer to be commanded to Min CFM setpoint and mechanical cooling to be locked out during heating mode.
8. Cooling operation
   a. The controller compares the cooling setpoint with the space temperature and determines a need-cooling signal.
   b. During cooling mode, reset the supply fan VFD speed to lowest possible value in order to maintain space temperature setpoint.
   c. A call for cooling shall enable the economizer to provide free cooling for as long as possible.
   d. Should economizer not provide adequate cooling capacity, EMS unitary controller will engage mechanical cooling. First stage mechanical cooling consists of first stage DX compressor(s).
   e. If further cooling is required to meet demand for cooling, EMS unitary controller will engage second stage DX compressor(s) accordingly.
   f. Mechanical heating to be locked out during cooling mode.
9. Automatic Shutdown (Smoke Detection)
   a. Upon receiving a signal from the fire alarm system (equiped with total coverage smoke detection system), the AC Unit shall shut down via hardwire interlock.
10. Power Exhaust
   a. All Power Exhaust fan operations shall be controlled by separate non-EMS external devices as provided by the AC Unit Manufacturer. End switch shall enable power exhaust to operate when OA damper opens up.
   b. Power exhaust shall maintain a building static pressure of 0.01" to 0.03" WC negative (adjustable). Air balance contractor shall set power exhaust setpoint at time of balance.
11. Fault Detection Diagnostics
   a. The EMS DDC Controller shall monitor the following economizer actuator Fault Detection Diagnostic conditions and broadcast results via EMS network:
      i. Temperature Sensor Failure/Fault.
      ii. Economizer not economizing when enabled.
      iii. Economizer economizing when disabled.
      iv. Economizer damper modulation failure.
      v. Excess outdoor air.
12. Monitoring - The following conditions shall be monitored and displayed at EMS Operator Workstation/Graphical User Interface:
   a. Supply air temperature.
   b. Room temperature.
   c. Room humidity.
   d. Room CO2 concentration.
   e. Current mode (heating/cooling/fan).
   f. Supply air temperature attained last time unit was in heating.
   g. Supply air temperature attained last time unit was in cooling.
   h. Current command status of fan, economizer, compressor and gas valve.
   i. Run time meters on fan, compressor, and heat.
   j. Fan Status thru Current Switch.
   k. Economizer actuator feedback status.

OCCUPIED MODE SET POINTS: 76 DEG F COOLING, 72 DEG F HEATING
UNOCCUPIED MODE SET POINTS: 85 DEG F COOLING, 55 DEG F HEATING

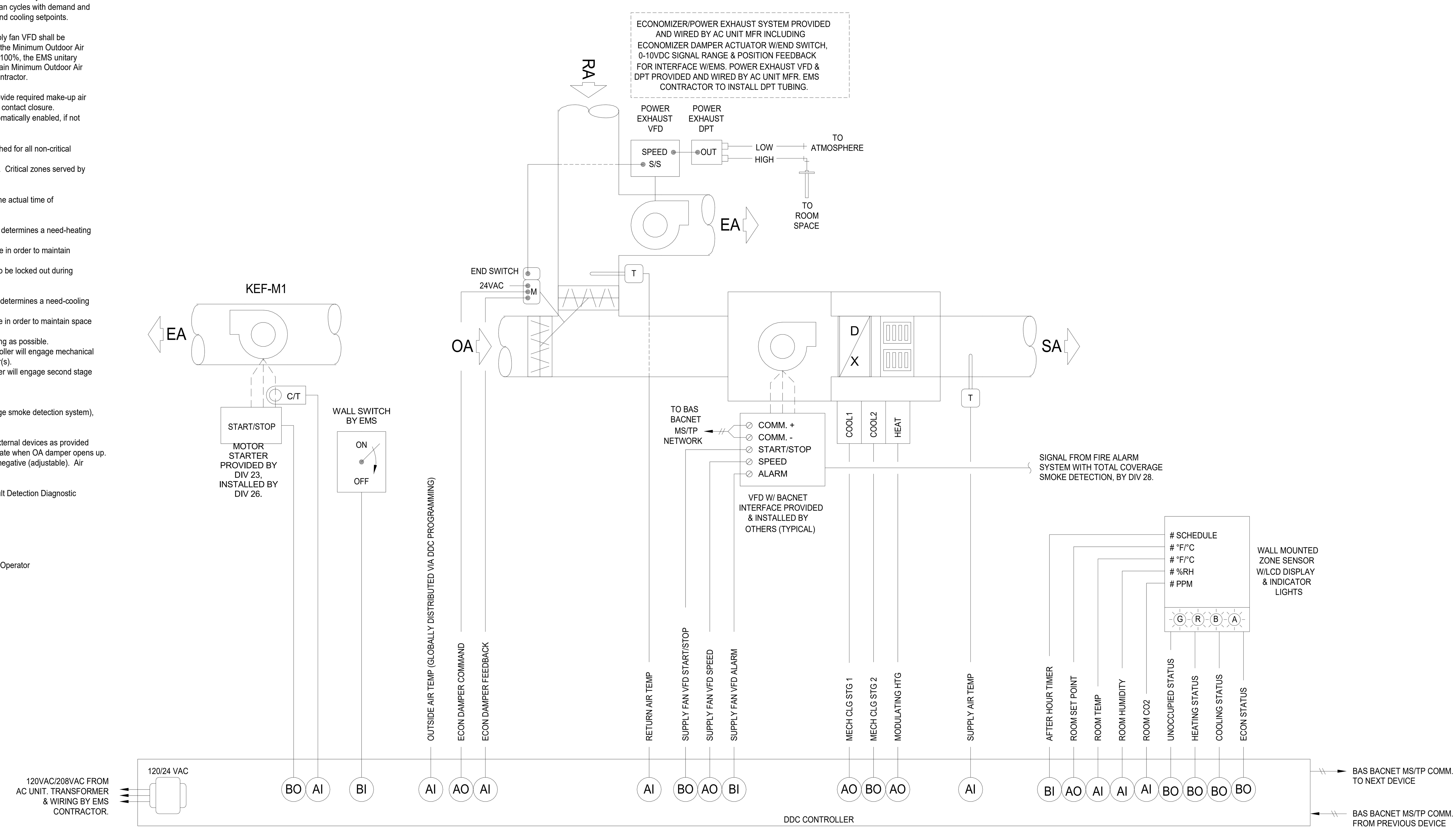

KITCHEN MAU CONTROL DIAGRAM

SCALE : NONE

1
M604

Meter	Building Served	System Type	Pipe Size	Reports To
A-1	ADMIN	DOMESTIC WATER	2"	ALERTON EMS
A-2	ADMIN	ELECTRICITY	-	ALERTON EMS
C-1	COMET	DOMESTIC WATER	2-1/2"	ALERTON EMS
C-2	COMET	ELECTRICITY	-	ALERTON EMS
E-1	EDUCATION	DOMESTIC WATER	2-1/2"	ALERTON EMS
E-2	EDUCATION	ELECTRICITY	-	ALERTON EMS
HM-1	MEN'S HOUSING	DOMESTIC WATER	2-1/2"	ALERTON EMS
HM-2	MEN'S HOUSING	ELECTRICITY	-	ALERTON EMS
HW-1	WOMEN'S HOUSING	DOMESTIC WATER	2"	ALERTON EMS
HW-2	WOMEN'S HOUSING	ELECTRICITY	-	ALERTON EMS
MP-1	MULTIPURPOSE	DOMESTIC WATER	3"	ALERTON EMS
MP-2	MULTIPURPOSE	PROPANE GAS	3/4"	ALERTON EMS
MP-3	MULTIPURPOSE	ELECTRICITY	-	ALERTON EMS
R-1	RECREATION	DOMESTIC WATER	3"	ALERTON EMS
R-2	RECREATION	ELECTRICITY	-	ALERTON EMS
W-1	WAREHOUSE	DOMESTIC WATER	3"	ALERTON EMS
W-2	WAREHOUSE	ELECTRICITY	-	ALERTON EMS

NOTES:
1. SEE PLUMBING FLOOR PLANS FOR METER LOCATIONS.
2. SEE 1/M600 FOR METER INTEGRATION WITH EMS SYSTEM ARCHITECTURE.
3. EMS CONTRACTOR SHALL PROVIDE POWER METERS WITH BACnet MS/TP CAPABILITIES, WATER METERS WITH PULSE OUTPUTS, AND PROPANE METER WITH PULSE OUTPUT. PROVIDE FIELD LEVEL CONTROLLERS AS REQUIRED FOR REPORTING TO EMS.

BUILDING/CAMPUS METERING REQUIREMENTS

SCALE : NONE

2
M604

IDENTIFICATION STAMP
DIV. OF THE STATE ARCHITECT
APP: 02-118630 INC:
REVIEWED FOR
SS ☐ FLS ☐ ACS ☑
DATE: 04/13/2021

OFFICE OF THE STATE FIRE MARSHAL
APPROVED FIRE AND PANIC ONLY
Approval of this plan does not authorize or approve any omission or deviation from applicable regulations. Final approval is subject to field inspection. One set of approved plans shall be available on the project site at all times.
PERMIT NO.: 20-N-2332-CP
REVIEWED BY: LITO CATAYLO, OSFM
DATE: 4/1/2021

GENERAL SERVICES
Department of General Services
State of California
Real Estate Services Division
Project Management & Development Branch
707 Third Street, Suite 4-105
West Sacramento, California 95605

NICHOLS MELBURG & ROSSETTO
ARCHITECTS + ENGINEERS
300 Knollcrest Drive
Redding, CA. 96002
(530) 222-3300 (530) 222-3538 FAX
http://www.nmrdesign.com

Copyright © 2019
All ideas, designs, arrangements and plans indicated or represented by this drawing are owned by, and the property of, NICHOLS, MELBURG and ROSSETTO and were created, evolved and developed for use on, and in conjunction with, the specified project. None of such ideas, designs, arrangements or plans shall be used by, or disclosed to any person, firm or corporation for any purpose whatsoever without the written permission of NICHOLS, MELBURG and ROSSETTO.

LICENSE STAMPS
REGISTERED PROFESSIONAL ENGINEER
M 33498
EXPIRES 9/30/22
MECHANICAL
STATE OF CALIFORNIA
DATE SIGNED: 10-20-20

CONSULTANT
CAPITAL ENGINEERING CONSULTANTS, INC.
RANCHO CORDOVA, CALIFORNIA
JD - HC/JH — PM - DESIGN TEAM
181205.00 — PROJECT NO.

DRAWING STATUS
CONSTRUCTION DOCUMENTS

ISSUE

No.	Date	Description
1	10/22/2020	INITIAL PLAN REVIEW
2	01/22/2021	AGENCY RESUBMITTAL
3	03/22/2021	AGENCY RESUBMITTAL

If drawing is not 30" x 42" it is a reduced print

PROJECT
RESIDENTIAL CENTER, UKIAH: REPLACEMENT OF EXISTING RESIDENTIAL CENTER
440 EAST HILL ROAD
WILLITS, CALIFORNIA 95490
MENDOCINO COUNTY
CALIFORNIA CONSERVATION CORPS

Supervisor | Designed | Drawn: Author

DSA Application No.
02-118630

SHEET TITLE
HVAC CONTROLS

DGS Project Number: 000000000001826
NMR Project Number: 18-6456

Sheet Scale: 12" = 1'-0"

Sheet Number: M604

ISSUE DATE
July 9, 2021

Plot Date: 3/19/2021 1:16:13 PM
File Name: L:\Revit Local Files\CECI_DGS CCC Willits_Schedules_MP18_Central_jduvalKTH47.rvt

PLUMBING ABBREVIATIONS

ABBREVIATION	DESCRIPTION
ABC	ABOVE CEILING
ACC DR	ACCESS DOOR
ACC P	ACCESS PANEL
AFF	ABOVE FINISHED FLOOR
AFG	ABOVE FINISHED GRADE
AFP	ABOVE FINISHED PAVEMENT
AHV	AIR HOSE VALVE
ASH	AUTOMATIC SPRINKLER HEAD
BEL	BELOW
BFF	BELOW FINISHED FLOOR
BFG	BELOW FINISHED GRADE
BFP	BACKFLOW PREVENTER
BLDG	BUILDING
CDC	CALIFORNIA DEPARTMENT OF CORRECTIONS
CFF	CAPPED FOR FUTURE
CLG	CEILING
CMP	CORRUGATED METAL PIPE
COL	COLUMN
CONN	CONNECT/CONNECTION
CONT	CONTINUATION
CWH	COLD WATER HEADER
(D)	DROP
DF	DRINKING FOUNTAIN
DIA	DIAMETER
DN	DOWN
DW	DRY WELL
DW	DISHWASHER
DWG	DRAWING
(E)	EXISTING
EL	ELEVATION
ELEC	ELECTRICAL
EQUIP	EQUIPMENT
ES	EMERGENCY SHOWER
EW	EYE WASH
EWC	ELECTRIC WATER COOLER
FA	FROM ABOVE
FB	FROM BELOW
FD	FLOOR DRAIN
FFE	FINISHED FLOOR ELEVATION
FF	FINISHED FLOOR
FLR	FLOOR
FSR	FIRE SPRINKLER RISER
FT	FLOOR TOILET
/FT	PER FOOT
FTK	FLUSH TANK
FU	FIXTURE UNIT
FV	FLUSH VALVE
GAL	GALLONS
HC	HANDICAPPED
HR	HOUR
HS	HAND SINK
HT	HEIGHT
HTR	HEATER
HWH	HOT WATER HEATER
IE	INVERT ELEVATION
KEC	KITCHEN EQUIPMENT CONTRACTOR
KS	KITCHEN SINK
LV	LAVATORY
MC	MOTOR CONTROLLER
MECH	MECHANICAL
MTD	MOUNTED
(N)	NEW
NC	NORMALLY CLOSED

PLUMBING ABBREVIATIONS

ABBREVIATION	DESCRIPTION
NO	NORMALLY OPEN
NTS	NOT TO SCALE
OFCI	OWNER FURNISHED, CONTRACTOR INSTALLED
OFOI	OWNER FURNISHED, OWNER INSTALLED
OH	OVERHEAD
OS & Y	OUTSIDE SCREW AND YOKE
PH	PHASE
PLBG	PLUMBING
PLP	PROPANE - LOW PRESSURE
PO	PLUGGED OUTLET
PRS	PRE-RINSE SINK
PS	POT SINK
PT	PLASTER TRAP
(R)	RISER
REC	RECESSED
REQD	REQUIRED
REV	REVISION
RM	ROOM
RPBP	REDUCED PRESSURE BACKFLOW PREVENTER
RWL	RAIN WATER LEADER
SD	STORM DRAIN
SH	SHOWER
SPEC	SPECIFICATION
SS	STAINLESS STEEL/SERVICE SINK
STD	STANDARD
STRUC	STRUCTURAL
(TA)	TO ABOVE
(TB)	TO BELOW
T.C.C.	TEMPERATURE CONTROLS CONTRACTOR
TD	TRENCH DRAIN
TEMP	TEMPERATURE
TOC	TOP OF CONCRETE
TS	TAMPER SWITCH
TYP	TYPICAL
UF	UNDER FLOOR
UG	UNDERGROUND
UL	UNDERWRITERS' LABORATORIES
UR	URINAL
US	UNDER SLAB
V	VENT
VTR	VENT THRU ROOF
VO	VALVED OUTLET
VW	VACUUM WASTE
W/	WITH
W/O	WITHOUT
W	WASTE
WC	WATER CLOSET
WC/L	WATER CLOSET AND LAVATORY
WF	WASH FOUNTAIN
ZCV	ZONE CONTROL VALVE

SYMBOLS LEGEND

SYMBOL	ABBREVIATION	DESCRIPTION
	---	3 WAY MODULATING CONTROL VALVE
	---	3 WAY TWO POSITION CONTROL VALVE
	---	3 WAY VALVE
	---	ANCHOR
	---	ANGLE GLOBE VALVE
	AVN	ANGLE VALVE
	AQ	AQUASTAT
	AD	AREA DRAIN
	---	AUTOMATIC AIR VENT
	---	AUTOMATIC FLOW CONTROL
	BFP, BP, DCW	BACKFLOW PREVENTER, REDUCE PRESSURE, DOUBLE CHECKVALVE
	---	BALANCING VALVE
	---	BALL JOINT
	---	BALL VALVE
	---	BOTTOM CONNECTION
	---	BUTTERFLY VALVE
BPT	BPT	BYPASS TIMER
	CBV	CALIBRATED BALANCE VALVE
	CB, RD	CATCH BASIN, ROOF DRAIN
	---	CHECK VALVE
	---	CIRCUIT SETTER VALVE
	CP	CIRCULATING PUMP
	CO	CLEANOUT
DS	DS	DYNAMIC SENSOR
	---	ECCENTRIC REDUCER
	EJ	EXPANSION JOINT
F	FD	FIRE DAMPER
	FDC	FIRE DEPARTMENT CONNECTION
	FHC	FIRE HOSE RACK AND CABINET
	FH	FIRE HYDRANT
FS	FS	FIRE/SMOKE DAMPER
	---	FLEXIBLE CONNECTOR
	---	FLOAT & THERMOSTATIC TRAP
	FD	FLOOR DRAIN
	FS	FLOOR SINK
	---	FLOW ARROW
FE	---	FLOW ELEMENT
	FLV	FLOW LIMITING VALVE
FS	FS	FLOW SWITCH
	GCK	GAGE COCK

SYMBOLS LEGEND

SYMBOL	ABBREVIATION	DESCRIPTION
	GSCK, PC	GAS COCK, PLUG COCK
	GM	GAS METER
	GPR	GAS PRESSURE REGULATOR
	---	GATE VALVE WITH HOSE ADAPTER
	---	GATE VALVE
	---	GLOBE VALVE
	HD	HOPPER DRAIN
	HB	HOSE BIBB
	HB	HOSE BIBB
H X	H	HUMIDISTAT
	---	INVERTED BUCKET TRAP
	---	LIMIT OF DEMOLITION
	---	MANUAL AIR VENT
	---	MODULATING CONTROL VALVE
	---	PIPE BREAK
	---	PIPE CAP
	---	PIPE DOWN
	---	PIPE GUIDE
	---	PIPE UP
	---	POINT OF CONNECTION
	PIV	POST INDICATOR VALVE
	PRV	PRESSURE REGULATING VALVE
	---	PRESSURE RELIEF VALVE
	---	REDUCER
SD	SD	SMOKE DAMPER
SD	SKD	SMOKE DETECTOR
	---	SOLENOID VALVE
	---	STRAINER
TS X	TS	TEMPERATURE SENSOR
	---	TEST PLUG
	---	THERMOMETER
T X	T	THERMOSTAT
	TP	TRAP PRIMER
	---	TWO POSITION CONTROL VALVE
	---	UNION
	---	VALVE IN RISER/DROP
	VB	VALVE IN VALVE BOX
	---	WALL CLEANOUT
	WHA	WATER HAMMER ARRESTOR
WM	WM	WATER METER

PLUMBING GENERAL NOTES

1. ACCESS PANELS SHALL BE PROVIDED AS NECESSARY TO PROPERLY ACCESS THE PLUMBING SYSTEM INCLUDING VALVES, REFER TO SPECIFICATION SECTION 08310.
2. OFFSET VENT THROUGH ROOFS 10'-0" MINIMUM FROM AIR INTAKES AND 4'-0" FROM OUTSIDE WALLS.
3. HVAC EQUIPMENT IS SHOWN FOR THE COORDINATION OF UTILITIES ONLY. REFER TO 'M' SHEETS FOR MORE INFORMATION.
4. THE CONNECTION OF NATURAL GAS LINES TO EQUIPMENT SHALL INCLUDE A LINE SIZE SHUT-OFF VALVE, UNION AND A MINIMUM 6" LONG DIRT LEG WITH ACCESSIBLE END CAP.
5. THE CONNECTION OF CONDENSATE DRAIN LINES TO HVAC EQUIPMENT SHALL INCLUDE A MINIMUM 4" DEEP "P"-TRAP AND PLUGGED TEE AT ALL OFFSETS.
6. PROVIDE WATER HAMMER ARRESTORS (WHA) AS INDICATED ON PLUMBING PLANS AND/OR AS DESCRIBED WITHIN DIVISION 22 SPECIFICATIONS. SIZING SHALL BE IN ACCORDANCE WITH PDI STANDARD WH-201.
7. FOR PIPES PASSING THROUGH, UNDER OR PARALLEL TO BUILDING FOOTINGS, RETAINING WALLS ETC. REFER TO STRUCTURAL DETAILS, 'S' SHEETS, FOR TYPICAL ARRANGEMENT.
8. CONTRACTOR SHALL FIELD VERIFY ALL POINTS OF CONNECTION TO SITE PIPING (LOCATIONS AND INVERT) PRIOR TO EXCAVATION, FABRICATION AND INSTALLATION OF ASSOCIATED PIPING RUNS. NOTIFY ARCHITECT AND OR ENGINEER IMMEDIATELY IF POINTS OF CONNECTION OR INVERTS ARE DIFFERENT THAN REPRESENTED ON THE DRAWINGS.
9. OFFSET ALL RISERS AND DROPS TO AVOID PENETRATIONS AT TOP PLATES.
10. PENETRATION OF PIPES, CONDUIT, ETC., IN WALLS AND/OR FLOORS REQUIRING PROTECTED OPENINGS SHALL BE FIRE STOPPED. MATERIAL SHALL BE A TESTED ASSEMBLY APPROVED BY THE STATE FIRE MARSHAL.
11. SEAL ALL PIPE PENETRATIONS THRU FLOORS WATERTIGHT. DRAWINGS SHALL BE CONSIDERED DIAGRAMMATIC ONLY. CONTRACTOR SHALL FIELD VERIFY WHERE POSSIBLE, EXACT LOCATIONS, SIZES, AND ELEVATIONS OF ALL ITEMS SHOWN PRIOR TO THE INSTALLATION OF ANY NEW WORK.
12. DRAWINGS SHALL BE CONSIDERED DIAGRAMMATIC ONLY. CONTRACTOR SHALL FIELD VERIFY WHERE POSSIBLE, EXACT LOCATIONS, SIZES, AND ELEVATIONS OF ALL ITEMS SHOWN PRIOR TO THE INSTALLATION OF ANY NEW WORK.
13. THE DRAWINGS ARE NOT INTENDED TO SHOW EVERY OFFSET OR FITTING OR EVERY STRUCTURAL DIFFICULTY THAT MAY BE ENCOUNTERED DURING INSTALLATION OF THE WORK. LOCATION OF ALL ITEMS NOT DEFINITELY FIXED BY DIMENSIONS ARE APPROXIMATE ONLY. EXACT LOCATIONS NECESSARY TO SECURE BEST CONDITIONS AND RESULTS MUST BE DETERMINED AT THE JOB SITE AND SHALL HAVE THE APPROVAL OF THE ARCHITECT BEFORE BEING INSTALLED
14. ALL VALVES SHOWN SHALL BE FULL LINE SIZE UNLESS OTHERWISE NOTED.
15. CLOSELY COORDINATE ALL WORK WITH OTHER TRADES PRIOR TO TRENCHING OR INSTALLATION OF NEW. IDENTIFY SIZE AND LOCATIONS OF ALL PENETRATIONS THROUGH FOUNDATIONS, WALLS OR ROOFS PRIOR TO FABRICATION OF ANY SYSTEMS OR ORDERING MATERIALS AFFECTED BY POSSIBLE COORDINATION CONFLICTS.
16. CONCRETE ANCHORS SHALL BE HILTI, KWIK BOLT TZ 3/8" WITH EMBEDMENT AS PER STRUCTURAL PLANS. ANCHORS SHALL BE TESTED PER IR 19-1, INTERPRETIVE REGULATION FOR EXPANSION ANCHORS IN HARDENED CONCRETE. ANCHOR TEST SHALL BE 968 LBS. TENSION.
17. PIPING SHALL BE SUPPORTED AND BRACED IN STRICT COMPLIANCE WITH DIVISION 22 SPECIFICATIONS.
18. PENETRATION OF PIPES, CONDUITS, ETC., IN WALLS AND/OR FLOORS REQUIRING PROTECTED OPENINGS SHALL BE FIRE STOPPED. MATERIAL SHALL BE A TESTED ASSEMBLY APPROVED BY THE STATE FIRE MARSHAL. SEE G130 FOR FIRE-RATED ASSEMBLY PENETRATION DETAILS.
19. ALL NEW SANITARY WASTE PIPING SHOWN SHALL BE SLOPED AT 1/4" PER FOOT MINIMUM UNLESS OTHERWISE NOTED ON PLANS. WHERE SLOPES LESS THAN 1/4" PER FOOT ARE INDICATED, CONTRACTOR SHALL SLOPE NEW PIPING UNIFORMLY BETWEEN UPPER TERMINAL OF PIPE AND THE POINT OF CONNECTION TO THE SITE PIPING (AS INDICATED ON THE CIVIL PLANS) TO ACHIEVE MAXIMUM SLOPE POSSIBLE AND IN NO CASE SHALL THE PIPING BE SLOPED LESS THAN THE MINIMUM INDICATED.
20. CONCEAL ALL PIPING IN WALL FURRING, PARTITIONS, ETC., EXCEPT AT MECHANICAL ROOMS.
21. REFER TO ARCHITECTURAL DRAWINGS FOR BUILDING DIMENSIONS AND EXACT LOCAITONS OF PLUMBING FIXTURES.

MEP COMPONENT ANCHORAGE NOTE

ALL MECHANICAL, PLUMBING, AND ELECTRICAL COMPONENTS SHALL BE ANCHORED AND INSTALLED PER THE DETAILS ON THE DSA APPROVED CONSTRUCTION DOCUMENTS. WHERE NO DETAIL IS INDICATED, THE FOLLOWING COMPONENTS SHALL BE ANCHORED OR BRACED TO MEET THE FORCE AND DISPLACEMENT REQUIREMENTS PRESCRIBED IN THE 2019 CBC, SECTIONS 1617A.1.18 THROUGH 1617A.1.26 AND ASCE 7-16 CHAPTERS 13, 29 AND 30.

1. ALL PERMANENT EQUIPMENT AND COMPONENTS.
2. TEMPORARY OR MOVABLE EQUIPMENT THAT IS PERMANENTLY ATTACHED (e.g. HARD WIRED) TO THE BUILDING UTILITY SERVICES SUCH AS ELECTRICITY, GAS OR WATER.
3. MOVABLE EQUIPMENT THAT IS HEAVIER THAN 400 POUNDS OR HAS A CENTER OF MASS LOCATED 4 FEET OR MORE ABOVE THE ADJACENT FLOOR OR ROOF THAT DIRECTLY SUPPORT THE EQUIPMENT ARE TO BE ANCHORED WITH TEMPORARY ATTACHMENTS.

THE ATTACHEMENT OF THE FOLLOWING MECHANICAL AND ELECTRICAL COMPONENTS SHALL BE POSITIVELY ATTACHED TO THE STRUCTURE, BUT NEED NOT BE DETAILED ON THE PLANS. THESE COMPONENTS SHALL HAVE FLEXIBLE CONNECTIONS PROVIDED BETWEEN THE COMPONENT AND ASSOCIATED DUCTWORK, PIPING, AND CONDUIT.

A. COMPONENTS WEIGHING LESS THAN 400 POUNDS AND HAVE A CENTER OF MASS LOCATED 4 FEET OR LESS ABOVE THE ADJACENT FLOOR OR ROOF LEVEL THAT DIRECTLY SUPPORT THE COMPONENT.
B. COMPONENTS WEIGHING LESS THAN 20 POUNDS, OR IN THE CASE OF DISTRIBUTION SYSTEMS, LESS THAN 5 POUNDS PER FOOT, WHICH ARE SUSPENDED FROM A ROOF OR FLOOR OR HUNG FROM A WALL.

FOR THOSE ELEMENTS THAT DO NOT REQUIRE DETAILS ON THE APPROVED DRAWINGS, THE INSTALLATION SHALL BE SUBJECT TO THE APPROVAL OF THE STRUCTURAL ENGINEER OF RECORD AND THE DSA DISTRICT STRUCTURAL ENGINEER. THE PROJECT INSPECTOR WILL VERIFY THAT ALL COMPONENTS AND EQUIPMENT HAVE BEEN ANCHORED IN ACCORDANCE WITH ABOVE REQUIREMENTS.

PIPING, DUCTWORK & ELECTRICAL DISTRIBUTION SYSTEM BRACING NOTE

PIPING, DUCTWORK, AND ELECTRICAL DISTRIBUTION SYSTEMS SHALL BE BRACED TO COMPLY WITH THE FORCES AND DISPLACEMENTS PRESCRIBED IN ASCE 7-16 SECTION 13.3 AS DEFINED IN ASCE 7-16 SECTION 13.6.8, 13.6.7, 13.6.5.6, AND 2019 CBC, SECTIONS 1616A.1.23, 1616A.1.24, 616A.1.25 AND 1616A.1.26.

THE BRACING AND ATTACHMENTS TO THE STRUCTURE SHALL BE DETAILED ON THE APPROVED DRAWINGS OR THEY SHALL COMPLY WITH ONE OF THE OSHPD PRE-APPROVALS (OPM #)

COPIES OF THE MANUAL SHALL BE AVAILABLE ON THE JOBSITE PRIOR TO THE START OF HANGING THE BRACING OF THE PIPE, DUCTWORK, AND ELECTRICAL DISTRIBUTION SYSTEMS.

THE STRUCTURAL ENGINEER OF RECORD SHALL VERIFY THE ADEQUACY OF THE STRUCTURE TO SUPPORT THE HANGER AND BRACE LOADS.

IDENTIFICATION STAMP
DIV. OF THE STATE ARCHITECT
APP: 02-118630 INC:
REVIEWED FOR
SS ☐ FLS ☐ ACS ☑
DATE: 04/13/2021

OFFICE OF THE STATE FIRE MARSHAL
APPROVED FIRE AND PANIC ONLY
Approval of this plan does not authorize or approve any omission or deviation from applicable regulations. Final approval is subject to field inspection. One set of approved plans shall be available on the project site at all times.
PERMIT NO.: 20-N-2332-CP
REVIEWED BY: LITO CATAYLO, OSFM
DATE: 4/1/2021

GENERAL SERVICES
Department of General Services
State of California
Real Estate Services Division
Project Management & Development Branch
707 Third Street, Suite 4-105
West Sacramento, California 95605

NICHOLS MELBURG & ROSSETTO
ARCHITECTS + ENGINEERS
300 Knollcrest Drive
Redding, CA. 96002
(530) 222-3300 (530) 222-3538 FAX
http://www.nmrdesign.com

Copyright © 2019
All ideas, designs, arrangements and plans indicated or represented by this drawing are owned by, and the property of, NICHOLS, MELBURG and ROSSETTO and were created, evolved and developed for use on, and in conjunction with, the specified project. None of such ideas, designs, arrangements or plans shall be used by, or disclosed to any person, firm or corporation for any purpose whatsoever without the written permission of NICHOLS, MELBURG and ROSSETTO.

LICENSE STAMPS
REGISTERED PROFESSIONAL ENGINEER
M 33498
EXPIRES 9/30/22
MECHANICAL
STATE OF CALIFORNIA
DATE SIGNED: 10-20-20

CONSULTANT
CAPITAL
ENGINEERING CONSULTANTS, INC.
RANCHO CORDOVA, CALIFORNIA
JD - HC/JH — PM - DESIGN TEAM
181205.00 — PROJECT NO.

DRAWING STATUS
CONSTRUCTION DOCUMENTS

ISSUE

No.	Date	Description
1	10/22/2020	INITIAL PLAN REVIEW
2	01/22/2021	AGENCY RESUBMITTAL
3	03/22/2021	AGENCY RESUBMITTAL

If drawing is not 30" x 42" it is a reduced print

PROJECT
RESIDENTIAL CENTER, UKIAH: REPLACEMENT OF EXISTING RESIDENTIAL CENTER
440 EAST HILL ROAD
WILLITS, CALIFORNIA 95490
MENDOCINO COUNTY
CALIFORNIA CONSERVATION CORPS

Supervisor | Designed | Drawn: Author

DSA Application No.
02-118630

SHEET TITLE
PLUMBING LEGENDS & NOTES

DGS Project Number: 000000000001826
NMR Project Number: 18-6456
Sheet Scale: 1" = 1'-0"
Sheet Number: P001

ISSUE DATE
July 9, 2021

Plot Date: 3/19/2021 1:31:29 PM
File Name: L:\Revit Local Files\CECI_DGS CCC Willits_Admin_MP18\CECI_DGS CCC Willits_Admin_MP18_jduval.rvt

MISC. PLUMBING EQUIPMENT SCHEDULE

UNIT	DESCRIPTION
GI MP-1	GREASE INTERCEPTOR "SCHIER" MODEL GB-250, 275 GALLON GREASE INTERCEPTOR, TWO (2) 24" STANDARD MANHOLES, 4" INLET & OUTLET CONNECTIONS. SEE DETAIL 9/P500 OPER. WEIGHT = 2,630 LBS.
FT W-1	DUAL DISPENSING FUEL TANK "CONTAINMENT SOLUTIONS" 2 COMP (1000/1000)UL-2085 ABOVE GROUND VAULT TANK, DIESEL AND GASOLINE DISPENSING PACKAGES, DUAL COMPARTMENT, 1,000 GAL EACH, WITH FUEL LIMITER VALVES, PROVIDE PHASE II VAPOR RECOVERY EQUIPMENT PACKAGE. 11' 11-3/8" x 7'6" x 4'7" H. SYSTEM SHALL COMPLY WITH NFPA 30A. SEE DETAIL 1/P501 SEE 13/C6.02 AND 14/C6.02 FOR SLAB DETAILS AT FUELING TANK SHIPPING WEIGHT = 12,500 LBS. APPROX. FULL WEIGHT = 25,500 LBS.
SOI W-1	SAND-OIL INTERCEPTOR "JENSEN" PRECASE MODEL JP1000EPE-SO, 1000 GALLON SAND-OIL INTERCEPTOR. PROVIDE TWO 24" CAST IRON FRAME AND COVER WITH GASTIGHT GASKET. 5'-4" WIDE x 8'-2" LONG x 6'-3" DEEP AND SAMPLING BOX. 1,000 GALLON LIQUID CAPACITY, COVER WITH H-20 TRAFFIC RATED DESIGN LOAD. SEE DETAIL 10/P500 TANK WEIGHT = 11,000 LBS.
GD 1	GARBAGE DISPOSER "IN-SINK-ERATOR" MODEL EVOLUTION ESSENTIAL, 3/4HP, 120V, 1ø, 60HZ, 8.1 AMP.
WT 1	VEHICLE WASH WATER TREATMENT "WATERMAZE" PRIMARY TREATMENT SYSTEM EQUIVALENT TO MODEL NUMBER CLP-5024B. PROVIDE PRE-TREATMENT SYSTEM OF IN-GROUND FIBERGLASS PITS AND CATCH BASIN WITH H-20 TRAFFIC RATED COVERS PER MANUFACTURER. PROVIDE EBARA SS 1/2 HP SUMP PUMP. PROVIDE ALL PIPING, CONNECTIONS AND ACCESSORIES AS REQUIRED FOR A COMPLETE SYSTEM. SEE ARCHITECTURAL SITE PLAN FOR ADDITIONAL DETAILS COMPONENT WEIGHT VARIES.
AC 1	AIR COMPRESSOR "CALIFORNIA AIR TOOLS" CAT-4620AC, 2 HP, 4 GALLON, OIL FREE, TWIN TANK AIR COMPRESSOR. 5.3 CFM @ 90 PSI. 110V/1PH, 14 AMP.
PW 1	PRESSURE WASHER "LANDA" PG4-20324 INDUSTRIAL STRENGTH, GAS POWERED PORTABLE PRESSURE WASHER. 4.2 GPM @ 2000 PSI.
SP 1	SUMP PUMP "EBARA" SS 8.715-438.0, 1/2 HP, 230V/3PH

PRESSURE REDUCING VALVE SCHEDULE

UNIT	DESCRIPTION
PRV A-1	DOMESTIC WATER PRESSURE REDUCING VALVE "ZURN" MODEL 500XL 1-1/4" PRESSURE REDUCING VALVE WITH STRAINER, THREADED CONNECTIONS, MAX TEMP = 140 DEG F, MAX WORKING PRESSURE = 300 PSI, STANDARD ADJUSTABLE PRESSURE RANGE = 25-75 PSI. PROVIDE WITH BUILT-IN BYPASS OPTION. ANTICIPATED INLET PRESSURE = 120 PSI OUTLET PRESSURE SETPOINT = 60 PSI
PRV C-1	DOMESTIC WATER PRESSURE REDUCING VALVE "ZURN" MODEL 500XL 1-1/4" PRESSURE REDUCING VALVE WITH STRAINER, THREADED CONNECTIONS, MAX TEMP = 140 DEG F, MAX WORKING PRESSURE = 300 PSI, STANDARD ADJUSTABLE PRESSURE RANGE = 25-75 PSI. PROVIDE WITH BUILT-IN BYPASS OPTION. ANTICIPATED INLET PRESSURE = 120 PSI OUTLET PRESSURE SETPOINT = 60 PSI
PRV E-1	DOMESTIC WATER PRESSURE REDUCING VALVE "ZURN" MODEL 500XL 1-1/4" PRESSURE REDUCING VALVE WITH STRAINER, THREADED CONNECTIONS, MAX TEMP = 140 DEG F, MAX WORKING PRESSURE = 300 PSI, STANDARD ADJUSTABLE PRESSURE RANGE = 25-75 PSI. PROVIDE WITH BUILT-IN BYPASS OPTION. ANTICIPATED INLET PRESSURE = 120 PSI OUTLET PRESSURE SETPOINT = 60 PSI
PRV HM-1	DOMESTIC WATER PRESSURE REDUCING VALVE "ZURN" MODEL 500XL 1-1/4" PRESSURE REDUCING VALVE WITH STRAINER, THREADED CONNECTIONS, MAX TEMP = 140 DEG F, MAX WORKING PRESSURE = 300 PSI, STANDARD ADJUSTABLE PRESSURE RANGE = 25-75 PSI. PROVIDE WITH BUILT-IN BYPASS OPTION. ANTICIPATED INLET PRESSURE = 120 PSI OUTLET PRESSURE SETPOINT = 60 PSI
PRV HW-1	DOMESTIC WATER PRESSURE REDUCING VALVE "ZURN" MODEL 500XL 1-1/4" PRESSURE REDUCING VALVE WITH STRAINER, THREADED CONNECTIONS, MAX TEMP = 140 DEG F, MAX WORKING PRESSURE = 300 PSI, STANDARD ADJUSTABLE PRESSURE RANGE = 25-75 PSI. PROVIDE WITH BUILT-IN BYPASS OPTION. ANTICIPATED INLET PRESSURE = 120 PSI OUTLET PRESSURE SETPOINT = 60 PSI
PRV MP-1	DOMESTIC WATER PRESSURE REDUCING VALVE "ZURN" MODEL 500XL 1-1/2" PRESSURE REDUCING VALVE WITH STRAINER, THREADED CONNECTIONS, MAX TEMP = 140 DEG F, MAX WORKING PRESSURE = 300 PSI, STANDARD ADJUSTABLE PRESSURE RANGE = 25-75 PSI. PROVIDE WITH BUILT-IN BYPASS OPTION. ANTICIPATED INLET PRESSURE = 120 PSI OUTLET PRESSURE SETPOINT = 60 PSI
PRV R-1	DOMESTIC WATER PRESSURE REDUCING VALVE "ZURN" MODEL 500XL 1-1/4" PRESSURE REDUCING VALVE WITH STRAINER, THREADED CONNECTIONS, MAX TEMP = 140 DEG F, MAX WORKING PRESSURE = 300 PSI, STANDARD ADJUSTABLE PRESSURE RANGE = 25-75 PSI. PROVIDE WITH BUILT-IN BYPASS OPTION. ANTICIPATED INLET PRESSURE = 120 PSI OUTLET PRESSURE SETPOINT = 60 PSI
PRV W-1	DOMESTIC WATER PRESSURE REDUCING VALVE "ZURN" MODEL 500XL 1-1/4" PRESSURE REDUCING VALVE WITH STRAINER, THREADED CONNECTIONS, MAX TEMP = 140 DEG F, MAX WORKING PRESSURE = 300 PSI, STANDARD ADJUSTABLE PRESSURE RANGE = 25-75 PSI. PROVIDE WITH BUILT-IN BYPASS OPTION. ANTICIPATED INLET PRESSURE = 120 PSI OUTLET PRESSURE SETPOINT = 65 PSI

HYBRID HEAT PUMP WATER HEATER SCHEDULE

EQUIPMENT TAG		MANUFACTURER	MODEL	FIRST HOUR RATING [GAL]	TEMP SETTING [F]	VOLT/PH	RECOMMENDED BREAKER SIZE	UEF	OPERATING WEIGHT	PIPING DETAIL	MOUNTING DETAIL	NOTES
TYPE	UNIT #											
EWH	C-1	AO SMITH	HPTU-80N	86	120	208/1	30 A	3.45	1200	3/P500	1/P500	1,2
EWH	C-2	AO SMITH	HPTU-80N	86	120	208/1	30 A	3.45	1200	3/P500	1/P500	1,2
EWH	HM-1	AO SMITH	HPTU-80N	86	120	208/1	30 A	3.45	1200	3/P500	1/P500	1,2
EWH	HW-1	AO SMITH	HPTU-80N	86	120	208/1	30 A	3.45	1200	3/P500	1/P500	1,2

NOTES:

1. PROVIDE UNIT WITH DUCT ADAPTER AND BOOSTER FAN KIT. INSTALL PER MANUFACTURER'S INSTALLATION REQUIREMENTS.
2. BOOSTER FAN SHALL BE POWERED FROM 115V JUNCTION BOX PER MANUFACTURER'S INSTALLATION INSTRUCTIONS.

ELECTRIC WATER HEATER (TANKLESS) SCHEDULE

EQUIPMENT TAG		MANUFACTURER	MODEL	RECOVERY @ 65 F RISE [GPM]	TEMP SETTING	KW	VOLT/PH	RECOMMENDED BREAKER SIZE	UEF	OPERATING WEIGHT	PIPING DETAIL	NOTES
TYPE	UNIT #											
EWH	A-1	AO SMITH	C2VA-140X	1.5	120 °F	14.0	208/1	2 x 40 A	0.84	15	3/P500	1
EWH	E-1	AO SMITH	C2VA-140X	1.5	120 °F	14.0	208/1	2 X 40 A	0.84	15	3/P500	1
EWH	MP-1	AO SMITH	C4LA-280X	2.9	120 °F	28.0	208/1	2 x 70 A	0.92	25	3/P500	1
EWH	R-1	AO SMITH	C2VA-140X	1.5	120 °F	14.0	208/1	2 x 40 A	0.84	15	3/P500	1
EWH	R-2	AO SMITH	C4LA-280X	2.9	120 °F	28.0	208/1	2 x 70 A	0.92	25	3/P500	1
EWH	W-1	AO SMITH	C4LA-280X	2.9	120 °F	28.0	208/1	2 x 70 A	0.92	25	3/P500	1
EWH	W-2	AO SMITH	C2VA-140X	1.5	120 °F	14.0	208/1	2 x 40 A	0.84	15	3/P500	1

NOTES:

1. MOUNT TO WALL ACCORDING TO MANUFACTURER'S INSTRUCTIONS.

ELECTRIC WATER HEATER (W/ TANK) SCHEDULE

EQUIPMENT TAG		MANUFACTURER	MODEL	STORAGE CAP. [GAL]	RECOVERY @ 100 F RISE [GPH]	TEMP SETTING [F]	INPUT [KW]	VOLT/PH	FLA	OPERATING WEIGHT	MOUNTING DETAIL	PIPING DETAIL	NOTES
TYPE	UNIT #												
EWH	MP-2	AO SMITH	DVE-250A	250	123	140	30	480/3	36	3250	1/P500	3/P500	

AIR COMPRESSOR SCHEDULE

UNIT	LOCATION	"INGERSOLL-RAND" MODEL NO.	HP	STORAGE CAPACITY GALLONS	SCFM	ACFM	PSIG	VOLTAGE	DIMENSIONS L x W x H (IN.)	WEIGHT	PIPING DIAGRAM	NOTES
CA W-1	AIR COMP W106	2340L5	5	60	14.3	5.7	90	230/1ø	24"x33"x69"	450	12 P500	1

NOTES:
1. PROVIDE WITH INGERSOLL-RAND '32296238' AUTOMATIC DRAIN VALVE KIT.

AIR DRYER SCHEDULE

UNIT	LOCATION	"INGERSOLL-RAND" MODEL NO.	SCFM	POWER (kW)	VOLTAGE	DIMENSIONS L x W x H (IN.)	WEIGHT	PIPING DIAGRAM	NOTES
AD W-1	AIR COMP W106	D17EC	10	0.35	115V / 1ø	20"x15"x26"	85	12 P500	--

EXPANSION TANK SCHEDULE

UNIT	LOCATION	"MFR" MODEL NO.	TOTAL VOLUME (GAL)	ACCEPTANCE VOLUME (GAL)	OP. WT. (LBS.)	NOTES
ET A-1	JANITOR A107	"WESSELS" TTA-5	3.5	2.3	55	--
ET C-1	JAN. C112	"WESSELS" TTA-12	5	3.3	70	--
ET C-2	JAN. C110	"WESSELS" TTA-12	5	3.3	70	--
ET E-1	F.S./MECH. E120	"WESSELS" TTA-5	3.5	2.3	55	--
ET HM-1	MECH. HM109	"WESSELS" TTA-12	5	3.3	70	--
ET HW-1	F.S./MECH. HW109	"WESSELS" TTA-12	5	3.3	70	--
ET M-1	MECH. M117	"WESSELS" TTA-5	3.5	2.3	55	--
ET M-2	JAN. M129	"WESSELS" TTA-30	15	10	140	--
ET R-1	JANITOR R111	"WESSELS" TTA-5	3.5	2.3	55	--
ET R-2	JANITOR R111	"WESSELS" TTA-5	3.5	2.3	55	--
ET W-1	JANITOR W118	"WESSELS" TTA-5	3.5	2.3	55	--
ET W-2	W.H. W127	"WESSELS" TTA-5	3.5	2.3	55	--

CIRCULATING PUMP SCHEDULE

UNIT	LOCATION	"MFR" MODEL NO.	GPM	FT OF HEAD	ELEC INPUT [HP]	VOLTAGE	WATTS	CONTROL DIAGRAM	NOTES
CP A-1	JANITOR A107	"B & G" ECOCIRC 19-16	1.75	3.5	0.0057	115V/1ø	4-60	2/P500	--
CP C-1	JAN. C112	"B & G" ECOCIRC 19-16	1.5	2	0.0026	115V/1ø	4-60	2/P500	--
CP C-2	JAN. C110	"B & G" ECOCIRC 19-16	1.5	2	0.0026	115V/1ø	4-60	2/P500	--
CP E-1	F.S./MECH. E120	"B & G" ECOCIRC 19-16	3	3.25	0.0069	115V/1ø	4-60	2/P500	--
CP HM-1	MECH. HM109	"B & G" ECOCIRC 19-16	2	2	0.0030	115V/1ø	4-60	2/P500	--
CP HW-1	F.S./MECH. HW109	"B & G" ECOCIRC 19-16	2	2	0.0030	115V/1ø	4-60	2/P500	--
CP M-1	MECH. M117	"B & G" ECOCIRC 19-16	2.5	5	0.0104	115V/1ø	4-60	2/P500	--
CP M-2	JAN. M129	"B & G" ECOCIRC 19-16	3.25	6	0.0148	115V/1ø	4-60	2/P500	--
CP R-1	JANITOR R111	"B & G" ECOCIRC 19-16	3.5	5	0.0125	115V/1ø	4-60	2/P500	--
CP R-2	JANITOR R111	"B & G" ECOCIRC 19-16	1	1.75	0.0019	115V/1ø	4-60	2/P500	--
CP W-1	JANITOR W118	"B & G" ECOCIRC 20-35	6.0	15.0	0.0833	115V/1ø	4-60	2/P500	--
CP W-2	W.H. W127	"B & G" ECOCIRC 19-16	0.75	1.5	0.0014	115V/1ø	4-60	2/P500	--

Plot Date: 3/10/2021 1:18:15 PM
File Name: L:\Revit Local Files\CECD_DGS CCC Willits_Schedules_MP18_Central_jduvall\KTH47.rvt

IDENTIFICATION STAMP
DIV. OF THE STATE ARCHITECT
APP: 02-118630 INC:
REVIEWED FOR
SS ☐ FLS ☐ ACS ☑
DATE: 04/13/2021

OFFICE OF THE STATE FIRE MARSHAL
APPROVED FIRE AND PANIC ONLY
Approval of this plan does not authorize or approve any omission or deviation from applicable regulations. Final approval is subject to field inspection. One set of approved plans shall be available on the project site at all times.
PERMIT NO. 20-N-2332-CP
REVIEWED BY: LEO CATAYLO, OSFM
DATE: 4 / /2021

DGS GENERAL SERVICES
Department of General Services
State of California
Real Estate Services Division
Project Management & Development Branch
707 Third Street, Suite 4-105
West Sacramento, California 95605

NICHOLS MELBURG & ROSSETTO ARCHITECTS + ENGINEERS
300 Knollcrest Drive
Redding, CA. 96002
(530) 222-3300 (530) 222-3538 FAX
http://www.nmrdesign.com

Copyright © 2019
All ideas, designs, arrangements and plans indicated or represented by this drawing are owned by, and the property of, NICHOLS, MELBURG and ROSSETTO and were created, evolved and developed for use on, and in conjunction with, the specified project. None of such ideas, designs, arrangements or plans shall be used by, or disclosed to any person, firm or corporation for any purpose whatsoever without the written permission of NICHOLS, MELBURG and ROSSETTO

LICENSE STAMPS

REGISTERED PROFESSIONAL ENGINEER — M 33498 — EXPIRES 9/30/22 — MECHANICAL — STATE OF CALIFORNIA
DATE SIGNED: 10-20-20

CONSULTANT

CAPITAL ENGINEERING CONSULTANTS, INC.
RANCHO CORDOVA, CALIFORNIA
JD - HCUH — PM - DESIGN TEAM
181205.00 — PROJECT NO.

DRAWING STATUS
CONSTRUCTION DOCUMENTS

ISSUE

No.	Date	Description
1	10/22/2020	INITIAL PLAN REVIEW
2	01/22/2021	AGENCY RESUBMITTAL
3	03/22/2021	AGENCY RESUBMITTAL

If drawing is not 30" x 42" it is a reduced print

PROJECT
RESIDENTIAL CENTER, UKIAH: REPLACEMENT OF EXISTING RESIDENTIAL CENTER
440 EAST HILL ROAD
WILLITS, CALIFORNIA 95490
MENDOCINO COUNTY
CALIFORNIA CONSERVATION CORPS

Supervisor	Designed	Drawn
		Author

DSA Application No.
02-118630

SHEET TITLE
PLUMBING SCHEDULES

DGS Project Number: 000000000001826
NMR Project Number: 18-6456

Sheet Scale: 12" = 1'-0"
Sheet Number: P002

ISSUE DATE
July 9, 2021

PLUMBING FIXTURE CONNECTION SCHEDULE

ADA	SYMBOL	FIXTURE	FIXTURE MANUFACTURER AND MODEL No.	FAUCET OR VALVE MANUFACTURER AND MODEL No.	TRIM MANUFACTURER AND MODEL No.	REMARKS	VENT	WASTE		COLD WATER		HOT WATER	
								BRANCH	OUTLET	BRANCH	OUTLET	BRANCH	OUTLET
♿	WC-1	WATER CLOSET WALL MOUNTED FLUSH VALVE ADA	"AMERICAN STANDARD" AFWALL NO. 3351.101, 1.1 GPF, WALL HUNG, VITREOUS CHINA, ELONGATED, SIPHON JET ACTION, 1-1/2" TOP SPUD, 16 1/2" RIM HEIGHT.	"SLOAN" ECOS 8111-1.6/1.1, BATTERY POWERED, EXPOSED SENSOR FLUSH VALVE, 1.6/1.1 GPF. W/ TRAP PRIMER OPTION.	SEAT: "CHURCH" MODEL 295SSCT OR "BEMIS" MODEL 1955SSCT. PROVIDE WITH SELF-SUSTAINING CONCEALED CHECK HINGES, ONE PIECE STEEL POST HINGES, WHITE COLER. CARRIER: "J.R. SMITH" 100 OR 200 SERIES OR "ZURN" Z1203 AND Z1204 SERIES PROVIDE REAR SUPPORT LUG AND ANCHOR FOOT ASSEMBLY. WHERE SPACE CONSTRAINTS DO NOT ALLOW FOR THE ABOVE CARRIER MODELS, PROVIDE "ZURN" ZN1201-N OR ZN1202-N NARROW WALL CARRIER.	MOUNT AT HEIGHT INDICATED ON ARCHITECTURAL DRAWINGS.	2"	4"	4"	1-1/4"	1"	-	-
	WC-2	WATER CLOSET WALL MOUNTED FLUSH VALVE	"AMERICAN STANDARD" AFWALL NO. 3351.101, 1.1 GPF, WALL HUNG, VITREOUS CHINA, ELONGATED, SIPHON JET ACTION, 1-1/2" TOP SPUD.	"SLOAN" ECOS 8111-1.6/1.1, BATTERY POWERED, EXPOSED SENSOR FLUSH VALVE, 1.6/1.1 GPF. W/ TRAP PRIMER OPTION.	SEAT: "CHURCH" MODEL 295SSCT OR "BEMIS" MODEL 1955SSCT. PROVIDE WITH SELF-SUSTAINING CONCEALED CHECK HINGES, ONE PIECE STEEL POST HINGES, WHITE COLER. CARRIER: "J.R. SMITH" 100 OR 200 SERIES OR "ZURN" Z1203 AND Z1204 SERIES PROVIDE REAR SUPPORT LUG AND ANCHOR FOOT ASSEMBLY. WHERE SPACE CONSTRAINTS DO NOT ALLOW FOR THE ABOVE CARRIER MODELS, PROVIDE "ZURN" ZN1201-N OR ZN1202-N NARROW WALL CARRIER.	MOUNT AT HEIGHT INDICATED ON ARCHITECTURAL DRAWINGS.	2"	4"	4"	1-1/4"	1"	-	-
♿	UR-1	URINAL WALL MOUNTED FLUSH VALVE ADA	"AMERICAN STANDARD" PINTBROOK NO. 6002.001, 0.125 GPF, WALL HUNG, VITREOUS CHINA, SIPHON JET ACTION, 3/4" TOP SPUD, 2" THREADED OUTLET.	"SLOAN" ROYAL 186 SFSM-0.125. BATTERY POWERED, EXPOSED SENSOR FLUSH VALVE, 0.125 GPF.	CARRIER: "J.R. SMITH" 637 SERIES OR "ZURN" Z1222	MOUNT AT HEIGHT INDICATED ON ARCHITECTURAL DRAWINGS.	1-1/2"	2"	2"	1"	3/4"	-	-
♿	L-1	LAVATORY WALL MOUNTED ADA	"AMERICAN STANDARD" LUCERNE NO. 0355.012, WALL HUNG, VITREOUS CHINA WITH CONTOURED BACK AND SIDE SPLASH SHIELDS, FRONT OVERFLOW, CONCEALED ARM RECESS, 4" CENTERS, 20" x 18" D SHAPED BOWL.	"SLOAN" OPTIMA EBF-187-4-BAT-0.35GPM-BDT. 4" DECK MOUNT MIXING FAUCET, INFRARED SENSOR WITH BATTERY POWER SUPPLY, BELOW DECK THERMOSTATIC MIXING VALVE SET FOR HOT WATER OUTLET AT 105°F. 0.35 GPM MULTI-LAMINAR SPRAY. MAXIMUM TIME TO REACH HOT WATER SET POINT - 10 SECONDS. ADA COMPLIANT.	ADA COMPLIANT. LAVATORY GRID DRAIN WITH 4-1/4" OFFSET TAILPIECE, INTEGRAL PERFORATED GRID NO. 7723.018, CHROME FINISH. MOUNT P-TRAP FLUSH TO WALL, AND PROVIDE INSULATED DRAIN PIPING. CARRIER: "J.R. SMITH" 0700 OR "ZURN" Z1231	MOUNT AT HEIGHT INDICATED ON ARCHITECTURAL DRAWINGS. PROVIDE CONCEALED ARMS AND FLOOR SUPPORT, WITH FEET OF SUPPORT SECURELY ANCHORED TO FLOOR. IN ADDITION ANCHOR TOP OF SUPPORT TO WALL CONSTRUCTION.	1-1/2"	2"	1-1/2"	3/4"	1/2"	3/4"	1/2"
♿	L-2	LAVATORY COUNTER MOUNTED ADA	SOLID SURFACE LAVATORY INTEGRAL TO COUNTERTOP, SEE ARCHITECTURAL.	"SLOAN" OPTIMA EBF-187-4-BAT-0.35GPM-BDT. 4" DECK MOUNT MIXING FAUCET, INFRARED SENSOR WITH BATTERY POWER SUPPLY, BELOW DECK THERMOSTATIC MIXING VALVE SET FOR HOT WATER OUTLET AT 105°F. 0.35 GPM MULTI-LAMINAR SPRAY. MAXIMUM TIME TO REACH HOT WATER SET POINT - 10 SECONDS. ADA COMPLIANT.	ADA COMPLIANT. LAVATORY GRID DRAIN WITH 4-1/4" OFFSET TAILPIECE, INTEGRAL PERFORATED GRID NO. 7723.018, CHROME FINISH. MOUNT P-TRAP FLUSH TO WALL, AND PROVIDE INSULATED DRAIN PIPING.	COUNTER MOUNTED	1-1/2"	2"	1-1/2"	3/4"	1/2"	3/4"	1/2"
♿	SH-1	SHOWER FLUSH MOUNTED ADA	"SYMMONS" ORIGINS 9605-PLR-1.5-NS-VP, FLUSH MOUNTED INDIVIDUAL WALL SHOWER WITH FIXED SHOWER HEAD AND ADJUSTABLE HAND SHOWER, ADA COMPLIANT	COMPLETE WITH HOT AND COLD WATER PRESSURE BALANCED MIXING VALVES, 1.5 GPM FLOW CONTROL, TEMPTROL PRESSURE BALANCING VALBE WITH ADJUSTABLE STOP SCREW TO LIMIT HANDLE TURN, VANDAL RESISTANT ESCUTCHEON SCREWS, NON-SHARED DIVERTER VALVE.	INTEGRAL	MOUNT AT HEIGHT INDICATED ON ARCHITECTURAL DRAWINGS. SEE PLAN FOR ACCESSIBLE SEAT AND BAR LOCATION.	-	-	-	3/4"	1/2"	3/4"	1/2"
	SH-2	SHOWER FLUSH MOUNTED	"SYMMONS" ORIGINS 9605-PLR-1.5-LHS-NS-VP, FLUSH MOUNTED INDIVIDUAL WALL SHOWER, LESS HAND SHOWER TO INCLUDE ONLY WALL MOUNTED SHOWERHEAD	COMPLETE WITH HOT AND COLD WATER PRESSURE BALANCED MIXING VALVES, 1.5 GPM FLOW CONTROL, TEMPTROL PRESSURE BALANCING VALBE WITH ADJUSTABLE STOP SCREW TO LIMIT HANDLE TURN, VANDAL RESISTANT ESCUTCHEON SCREWS, NON-SHARED DIVERTER VALVE.	INTEGRAL	MOUNT AT HEIGHT INDICATED ON ARCHITECTURAL DRAWINGS.	-	-	-	3/4"	1/2"	3/4"	1/2"
♿	S-1	SINK COUNTER MOUNTED ADA	"ELKAY" MODEL LRADQ2219-6S-BP, 19" FRONT TO BACK, 22" WIDE x 6-1/2" DEPTH OVERALL. 18 GAUGE STAINLESS STEEL, LEDGE BACK WITH SELF- RIM. PROVIDE SINGLE HOLE. PROVIDE REAR DRAIN LOCATION. PROVIDE FACTORY ADHERED VANDAL RESISTANT BACKING PLATE AT FAUCET, AND SLOT AT FAUCET FOR VANDAL RESISTANT PINS.	"CHICAGO" ECAST 50-E35-317ABCP FAUCET, 1.5 GPM, 4" WRISTBLADE HANDLE, GN2A 5-1/4" RIGID/SWING GOOSENECK SPOUT, POLISHED CHROME FINISH, CERAMIC MIXING CARTRIDGE, VOLUME CONTROL, INTEGRAL WATER-HAMMER ARRESTOR, 3/8" COPPER SUPPLY TUBE INLETS.	"ELKAY" MODEL LKAD35, OFFSET CRUMB CUP STRAINER WITH REMOVABLE BASKET AND P-TRAP. INSTALL P-TRAP FLUSH TO WALL.	PROVIDE CLEANOUT FOR EACH FIXTURE.	1-1/2"	2"	1-1/2"	3/4"	1/2"	3/4"	1/2"
♿	S-2	SINK COUNTER MOUNTED TWO COMPARTMENT ADA	"ELKAY" MODEL LRADQ33-19-60 ,19" FRONT TO BACK, 33" WIDE x 6" DEPTH OVERALL. 18 GAUGE STAINLESS STEEL, TWO COMPARTMENT WITH LEDGE BACK, SELF-RIM. PROVIDE FAUCET HOLES ON 8" CENTERS. PROVIDE REAR DRAIN LOCATION FOR BOTH COMPARTMENTS.	"CHICAGO" ECAST 1100-E35-317ABCP (VVAVVP), WITH INDEXED WRIST BLADE HANDLES, 8" LONG SWIVEL SPOUT AND 1.5 GPM VANDAL RESISTANT LAMINAR FLOW AERATOR.	"ELKAY" MODEL LKAD35, OFFSET CRUMB CUP STRAINER WITH REMOVABLE BASKET AND P-TRAP FOR EACH COMPARTMENT. INSTALL P-TRAP FLUSH TO WALL.	PROVIDE CLEANOUT FOR EACH FIXTURE.	1-1/2"	2"	1-1/2"	3/4"	1/2"	3/4"	1/2"
	S-3	SINK COUNTER MOUNTED	"ELKAY" MODEL LRS3322, 33" WIDE, 22" FRONT TO BACK x 7-5/8" DEPTH OVERALL. 18 GAUGE STAINLESS STEEL. BOWL DIMENSIONS: 28" x 16" x 7-1/2".	"CHICAGO" ECAST 1100-E35-317ABCP (VVAVVP), WITH INDEXED WRIST BLADE HANGLES, 8" LONG SWIVEL SPOUT AND 1.5 GPM VANDAL REISTANT LAMINAR FLOR AERATOR.	"ELKAY" MODEL LKAD35, OFFSET CRUMB CUP STRAINER WITH REMOVABLE BASKET AND P-TRAP. INSTALL P-TRAP FLUSH TO WALL.	PROVIDE CLEANOUT FOR EACH FIXTURE.	1-1/2"	2"	1-1/2"	3/4"	1/2"	3/4"	1/2"
	SS-1	SERVICE SINK FLOOR MOUNTED	"FIAT" MODEL TSBCR1000, 28" x 28" x 12" DEEP, FLOOR MOUNTED, MOLDED STONE, WITH STAINLESS STEEL BUMPER GUARDS	"CHICAGO" MODEL 540-LD-897-WXF FAUCET 8" O.C. WITH LEVER HANDLES, CHROME FINISH, VACUUM BREAKER, TOP BRACE, PAIL HOOK AND 3/4" HOSE THREAD OUTLET AND CAST IRON TRAP.	"FIAT" MODEL 1453-BB STRAINER, PROVIDE SUITABLE BLOCKING FOR TOP BRACE AS PART OF ROUGH-IN FOR FAUCET WITH P-TRAP	PROVIDE "FIAT" MODEL 832-AA HOSE & BRACKET AND "FIAT" MODEL 889-CC MOP RACK	2"	2"	2"	3/4"	3/4"	3/4"	3/4"
♿	DF-1	DRINKING FOUNTAIN WALL MOUNTED DUAL HEIGHT ADA	"ELKAY" EZH20 MODEL LZSTLDDWSVRLK, BOTTLE FILLING STATION WITH BI-LEVEL FILTERED, NON-REFRIGERATED MODEL. 1.5 GPM FILL RATE. STAINLESS STEEL.		WITH P-TRAP	115V AND 60HZ, 1.1 F.L. AMPS, 15 RATED WATTS.	1-1/2"	2"	2"	3/4"	1/2"	-	-
♿	ESH/EW	EMERGENCY SHOWER EYE WASH ADA	"BRADLEY" MODEL S19-314-BF-SS, COMBINATION SHOWER AND EYE WASH, BARRIER FREE, STAINLESS STEEL.	PROVIDE NAVIGATOR S19-2150 EFX20 EMERGENCY THERMOSTATIC MIXING VALVE SET FOR WATER OUTLET AT 65°F .	INTEGRAL		-	-	-	1-1/4"	1-1/4"	1-1/4"	1-1/4"
♿	EW	EYE WASH ADA	"BRADLEY" MODEL S19-214-BF, EYE/FACE WASH, BARRIER FREE, STAINLESS STEEL, WITH FREEZE PROTECTION.	PROVIDE NAVIGATOR S19-2000 EFX8 EMERGENCY THERMOSTATIC MIXING VALVE SET FOR WATER OUTLET AT 65°F.	INTEGRAL		1-1/2"	1-1/4"	2"	3/4"	1/2"	3/4"	1/2"
	HB-1	HOSE BIBB	"J.R. SMITH" MODEL 5509 -EXTERIOR WALL MOUNT, NON-FREEZE.		WITH INTEGRAL VACUUM BREAKER	PROVIDE RECESSED 16 GA. STAINLESS STEEL HINGED BOX WITH FULL 180° HINGED LOCKING COVER. MOUNT 18" ABOVE FINISHED GRADE OR FLOOR	-	-	-	3/4"	3/4"	-	-
	HB-2	HOSE BIBB	"WOODFORD" B24-INTERIOR WALL MOUNTED BRASS CONCEALED BOX TYPE WITH LOCKABLE COVER.			MOUNT 18" ABOVE FINISHED GRADE OR FLOOR	-	-	-	3/4"	3/4"	-	-
	HB-3	HOSE BIBB	"WOODFORD" RHY2-MS, ROOF HYDRANT, ANTI FREEZE			FOR ROOF TOP MOUNTING INSTALLATION	-	-	-	3/4"	3/4"	-	-
	HB-4	HOSE BIBB HOT & COLD	"WOODFORD" MODEL 22, HOT & COLD WALL FAUCET, ANTI FREEZE				-	-	-	3/4"	3/4"	3/4"	3/4"
♿	FSH	FOOT SHOWER	"OUTDOOR SHOWER COMPANY" FSFS-200-CHV, ADA METERED FOOT SHOWER, STAINLESS STEEL, 6" DIAMETER BASE, 30"-36" STANDARD HEIGHT			PROVIDE COLD WATER LINE WITH DRAIN FOR WINTERIZATION TO PREVENT FREEZING	-	-	-	3/4"	1/2"	-	-
	FD	FLOOR DRAIN	"ZURN" MODEL Z-415	TYPE "B" STRAINER FOR EXPOSED CONCRETE TYPE "S" STRAINER FOR TILE FLOOR TYPE "SL STRAINER FOR COMPOSITION FLOOR	PROVIDE FLASHING RING AND CLAMP AT FLOORS WITH WATER RESISTANT MEMBRANE. SET TOP OF DRAIN SLIGHTLY BELOW FLOOR TO INSURE DRAINAGE. INSTALL VENTED P-TRAP. WHERE TRAP PRIMERS ARE INDICATED PROVIDE PROPER CONNECTION TO P-TRAP.		2"	2" 3" 4"	2" 3" 4"	-	-	-	-
	FDH	FLOOR DRAIN HEAVY DUTY	"ZURN" MODEL Z-662, 16" SQUARE TOP DRAIN	PROVIDE WITH HEAVY-DUTY SLOTTED LOOSE GRATE WITH SUSPENDED SEDIMENT BUCKET	PROVIDE FLASHING RING AND CLAMP AT FLOORS WITH WATER RESISTANT MEMBRANE. SET TOP OF DRAIN SLIGHTLY BELOW GRADE TO INSURE DRAINAGE. INSTALL VENTED P-TRAP. WHERE TRAP PRIMERS ARE INDICATED PROVIDE PROPER CONNECTION TO P-TRAP.		2"	4"	4"	-	-	-	-
	FS	FLOOR SINK	"ZURN" MODEL Z-1751 FOR GENERAL SPACES "ZURN" MODEL Z-1901-KC-2 FOR MECHANICAL SPACES		PROVIDE ANCHOR FLANGE, SEEPAGE PAN AND CLAMPING COLLAR. PROVIDE WHITE A.R.E. SEDIMENT BUCKET. PROVIDE 1/2 GRATE.	INSTALL FS FLUSH WITH FLOOR	2"	2" 3" 4"	2" 3" 4"	-	-	-	-
	TD	TRENCH DRAIN	"JR SMITH" MODEL 9930 ENVIRO-FLO II, 5.25" WIDE POLYPROPYLENE DRAIN, WITH INTEGRAL REBAR SUPPORT, CLOSING END OUTLET CAP, AND RESIN COMPOSITE GRATE, END DRAIN OUTLET.		HEAVY DUTY, CLASS C, SLOTTED 1-1/2 x 13/16 RESIN COMPOSITE GRATE (16.3 SQ IN)		2"	4"	-	-	-	-	-
	HR	HOSE REEL	"REELCRAFT" MODEL 4435, PREMIUM DUTY SPRING RETRACTABLE REEL, 1/4" HOSE DIAMETER, 35' HOSE LENGTH, 300 PSI MAX PRESSURE.			1/4" COMPRESSED AIR CONNECTION. NO DOMESTIC WATER OR SANITARY SEWER CONNECTIONS.	-	-	-	-	-	-	-
	TP-1	TRAP PRIMER	"PPP" PRIME-RITE TRAP PRIMER VALVE, MODEL FVP-1VB FOR FLUSH VALVES	PROVIDE WITH VACUUM BREAKER.		INSTALL PER MANUFACTURERS INSTRUCTIONS. PROVIDE DISTRIBUTION UNIT WITH FEEDER PIPING FOR A MAX. OF FOUR TRAPS WHEN NEEDED. PROVIDE SURFACE MOUNT BOX IN CHASES & MECHANICAL ROOMS. PROVIDE RECESSED BOX WITH ACCESS DOOR ALL OTHER LOCATIONS.	-	-	-	1/2"	1/2"	-	-
	TP-2	ELECTRONIC TRAP PRIMER	"PPP" PRIME-RITE TRAP PRIMER VALVE, MODEL MP-500	PROVIDE BALL VALVE AT EACH TP LOCATION. PROVIDE 115V CONNECTION.		INSTALL PER MANUFACTURERS INSTRUCTIONS. PROVIDE DISTRIBUTION UNIT WITH FEEDER PIPING FOR A MAX. OF FOUR TRAPS WHEN NEEDED. PROVIDE SURFACE MOUNT BOX IN CHASES & MECHANICAL ROOMS. PROVIDE RECESSED BOX WITH ACCESS DOOR ALL OTHER LOCATIONS.	-	-	-	1/2"	1/2"	-	-
	RIM	REFRIGERATOR ICE MAKER	"GUY GRAY" MODEL SSIB2AB LEAD FREE ICE MAKER HOOK-UP, WITH 1/2" FIP INLET AND 1/4" COMPRESSION OUTLET	INTEGRAL	INTEGRAL	PROVIDE STAINLESS STEEL BOX AND STAINLESS STEEL FACE PLATE.	-	-	-	1/2"	1/4"	-	-
	RD/OF	ROOF DRAIN OVERFLOW	COMBINATION ROOF DRAIN AND OVERFLOW 4" DIA PIPE SIZE MAX. - "ZURN" MODEL Z165 5" DIA AND 6" DIA - "ZURN" MODEL Z164	SECURE DECK PLATE TO ROOF. PROVIDE 6" HIGH CAST IRON VANDAL PROOF DOME TYPE STRAINER INLET AND CLAMPING COLLARS FOR PRIMARY AND OVERFLOW. 2-5/16" FROM DECK PLATE TO OVERFLOW INLET.		PROVIDE CLEANOUT FOR EACH FIXTURE.	-	- 4" 5" 6"	- 4" 5" 6"	-	-	-	-

IDENTIFICATION STAMP
DIV. OF THE STATE ARCHITECT
APP: 02-118630 INC:
REVIEWED FOR
SS ☐ FLS ☐ ACS ☑
DATE: 04/13/2021

OFFICE OF THE STATE FIRE MARSHAL
APPROVED FIRE AND PANIC ONLY
Approval of this plan does not authorize or approve any omission or deviation from applicable regulations. Final approval is subject to field inspection. One set of approved plans shall be available on the project site at all times.
PERMIT NO. 20-N-2332-CP
REVIEWED BY: LEO CATAYLO, OSFM
DATE: 4 / /2021

DGS GENERAL SERVICES
Department of General Services
State of California
Real Estate Services Division
Project Management & Development Branch
707 Third Street, Suite 4-105
West Sacramento, California 95605

NICHOLS MELBURG & ROSSETTO ARCHITECTS + ENGINEERS
300 Knollcrest Drive
Redding, CA. 96002
(530) 222-3300 (530) 222-3538 FAX
http://www.nmrdesign.com

Copyright © 2019
All ideas, designs, arrangements and plans indicated or represented by this drawing are owned by, and the property of, NICHOLS, MELBURG and ROSSETTO and were created, evolved and developed for use on, and in conjunction with, the specified project. None of such ideas, designs, arrangements or plans shall be used by, or disclosed to any person, firm or corporation for any purpose whatsoever without the written permission of NICHOLS, MELBURG and ROSSETTO.

LICENSE STAMPS

REGISTERED PROFESSIONAL ENGINEER — M 33498 — EXPIRES 9/30/22 — MECHANICAL — STATE OF CALIFORNIA
DATE SIGNED: 10-20-20

CONSULTANT

CAPITAL ENGINEERING CONSULTANTS, INC.
RANCHO CORDOVA, CALIFORNIA
JD - HC/JH — PM - DESIGN TEAM
181205.00 — PROJECT NO.

DRAWING STATUS
CONSTRUCTION DOCUMENTS

ISSUE

No.	Date	Description
1	10/22/2020	INITIAL PLAN REVIEW
2	01/22/2021	AGENCY RESUBMITTAL
3	03/22/2021	AGENCY RESUBMITTAL

If drawing is not 30" x 42" it is a reduced print

PROJECT
RESIDENTIAL CENTER, UKIAH: REPLACEMENT OF EXISTING RESIDENTIAL CENTER
440 EAST HILL ROAD
WILLITS, CALIFORNIA 95490
MENDOCINO COUNTY
CALIFORNIA CONSERVATION CORPS

Supervisor	Designed	Drawn
		Author

DSA Application No.
02-118630

SHEET TITLE
PLUMBING FIXTURE SCHEDULE

DGS Project Number: 0000000000001826
NMR Project Number: 18-6456

Sheet Scale: 12" = 1'-0"

Sheet Number: P003

ISSUE DATE
July 9, 2021

Plot Date: 3/16/2021 1:13:31 PM
File Name: L:\Revit Local Files\CECI_DGS CCC Willits_Admin_MP18\CECI_DGS CCC Willits_Admin_MP18_jduval.rvt

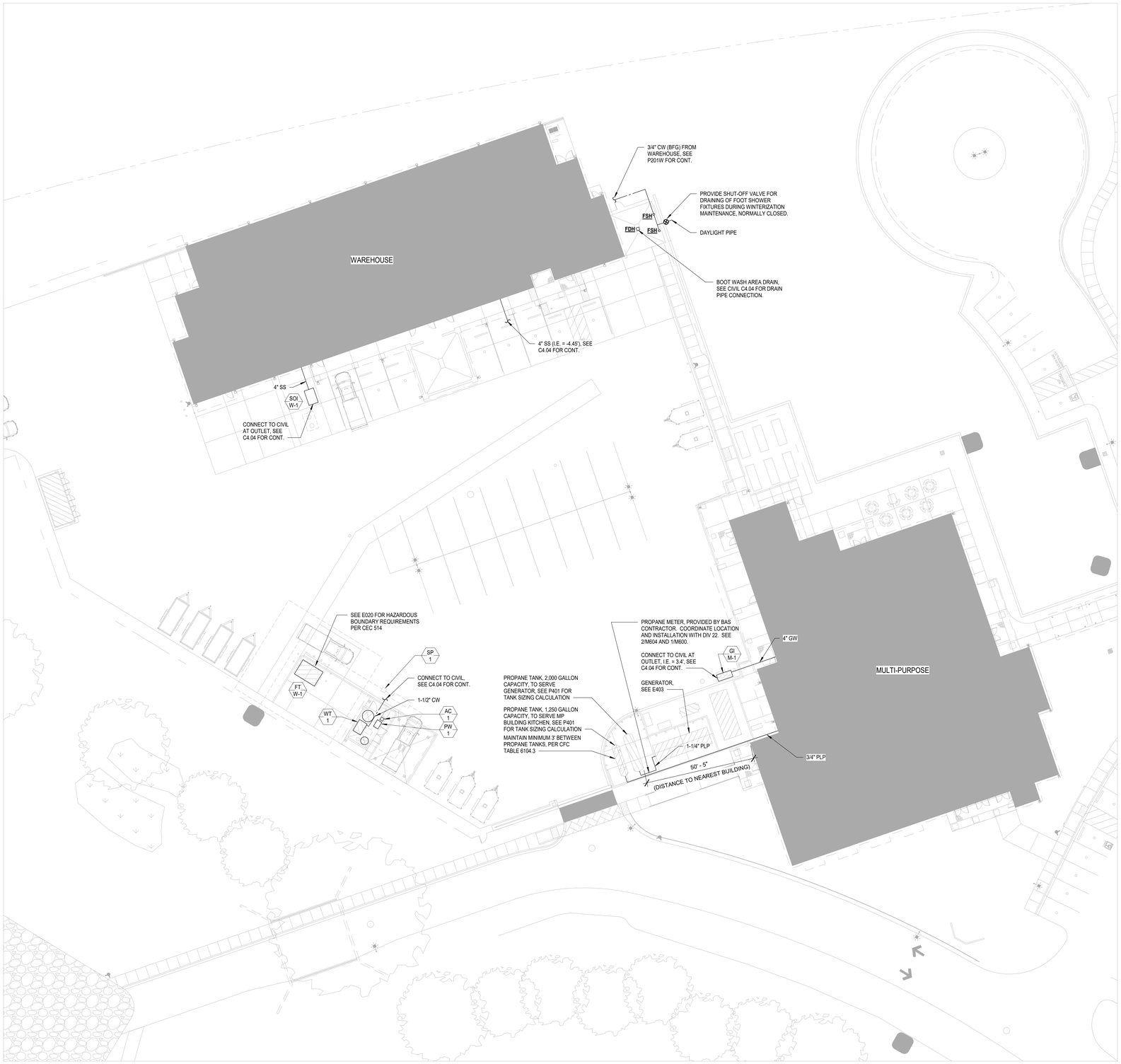

1 P101 PLUMBING SITE PLAN

SCALE: 1" = 20'-0"

Plot Date: 3/19/2021 1:10:11 PM
File Name: ...\Revit Local Files\CEQ_DGS CCC Willits_Warehouse_MP18_Central_jduvall\KTH47.rvt

IDENTIFICATION STAMP
DIV. OF THE STATE ARCHITECT
APP: 02-118630 INC:
REVIEWED FOR
SS ☐ FLS ☐ ACS ☑
DATE: 04/13/2021

OFFICE OF THE STATE FIRE MARSHAL
APPROVED FIRE AND PANIC ONLY
Approval of this plan does not authorize or approve any omission or deviation from applicable regulations. Final approval is subject to field inspection. One set of approved plans shall be available on the project site at all times.
PERMIT NO. 20-N-2332-CP
REVIEWED BY: LEO CATAYLO, OSFM
DATE: 4 / /2021

GENERAL SERVICES
Department of General Services
State of California
Real Estate Services Division
Project Management & Development Branch
707 Third Street, Suite 4-105
West Sacramento, California 95605

NICHOLS MELBURG & ROSSETTO
ARCHITECTS + ENGINEERS
300 Knollcrest Drive
Redding, CA. 96002
(530) 222-3300 (530) 222-3538 FAX
http://www.nmrdesign.com

Copyright © 2019
All ideas, designs, arrangements and plans indicated or represented by this drawing are owned by, and the property of, NICHOLS, MELBURG and ROSSETTO and were created, evolved and developed for use on, and in conjunction with, the specified project. None of such ideas, designs, arrangements or plans shall be used by, or disclosed to any person, firm or corporation for any purpose whatsoever without the written permission of NICHOLS, MELBURG and ROSSETTO

LICENSE STAMPS

REGISTERED PROFESSIONAL ENGINEER
KEVIN T. HOLT
M 35498
EXPIRES 9/30/22
MECHANICAL
STATE OF CALIFORNIA
DATE SIGNED: 10-20-20

CONSULTANT

CAPITAL
ENGINEERING CONSULTANTS, INC.
RANCHO CORDOVA, CALIFORNIA
JD - HC/JH (PM - DESIGN TEAM)
181205.00 (PROJECT NO.)

DRAWING STATUS
CONSTRUCTION DOCUMENTS

ISSUE

No.	Date	Description
1	10/22/2020	INITIAL PLAN REVIEW
2	01/22/2021	AGENCY RESUBMITTAL
3	03/22/2021	AGENCY RESUBMITTAL

If drawing is not 30" x 42" it is a reduced print

PROJECT
RESIDENTIAL CENTER, UKIAH: REPLACEMENT OF EXISTING RESIDENTIAL CENTER
440 EAST HILL ROAD
WILLITS, CALIFORNIA 95490
MENDOCINO COUNTY
CALIFORNIA CONSERVATION CORP

Supervisor	Designed	Drawn
		Author

DSA Application No.
02-118630

SHEET TITLE
PLUMBING SITE PLAN

DGS Project Number: 0000000000001826
NMR Project Number: 18-6456

Reference North: NORTH
Sheet Scale: 1" = 20'-0"
Sheet Number: P101

ISSUE DATE
July 9, 2021

PLUMBING FIXTURE CALCULATION

ADMINISTRATION BUILDING

PLUMBING FIXTURE CALCULATION WORKSHEET FOR SIZING WATER AND WASTE MAINS
FROM 2019 CALIFORNIA PLUMBING CODE, APPENDIX A (DOMESTIC WATER), CHAPTER 7 (WASTE).

FIXTURE NO.	TYPE	COLD WATER FU	COLD WATER TOTAL	HOT WATER TOTAL @ 75%	WASTE FU	WASTE TOTAL
2	WC (F.V.)	5	10	-	4	8
1	DF/EWC	0.5	0.5	-	0.5	0.5
1	HB (1ST ONLY)	2.5	2.5	-	0	0
2	HB (EA ADD.)	1	2	-	0	0
1	RIM	1	1	-	0.5	0.5
2	LAV (PRI)	1	2	1.5	1	2
1	SINK	1	1	0.75	2	2
1	SS	3	3	2.25	3	3
3	FS (2")	0	0	-	2	6
	TOTAL UNITS		22	4.5		22

SYSTEM IS SIZED USING FLUSH VALVES:

TOTAL CW SIZE TO SERVICE (22 FU)	37	GPM
PRESSURE AT BUILDING P.O.C.	60	PSI
HIGHEST FIXTURE	8	FT
PRESSURE LOSS FROM HEIGHT	3.5	PSI
PRESSURE LOSS FROM METER	5	PSI
PRESSURE LOSS FROM OTHER DEVICES	15	PSI
TOTAL PRESSURE LOSS	23.5	PSI
REQUIRED AT CRITICAL FIXTURE	30	PSI
PRESSURE AVAILABLE FOR FRICTION LOSS	6.5	PSI
TOTAL DEVELOPED LENGTH	190	FT
AVAILABLE DROP PER 100 FT	3.42	PSI
DROP PER 100 FT USED FOR PIPE SIZING	1.299	PSI
PIPE SIZE	2	IN
SEWER SIZE (22 FU)	4	IN

KEY NOTES:

1. DISCHARGE 3/4" CONDENSATE TO SINK/LAV TAILPIECE.
2. DISCHARGE 3/4" CONDENSATE TO SERVICE SINK.
3. DOMESTIC WATER BUILDING SHUT-OFF VALVE, IN VALVE BOX.
4. BUILDING WATER METER, PROVIDED BY BAS CONTRACTOR. COORDINATE LOCATION AND INSTALLATION WITH DIV 22. SEE 2/M604 AND 1/M600.
5. SEE DETAIL 11/P500 FOR HWR PIPING AT SINGLE FAUCET.

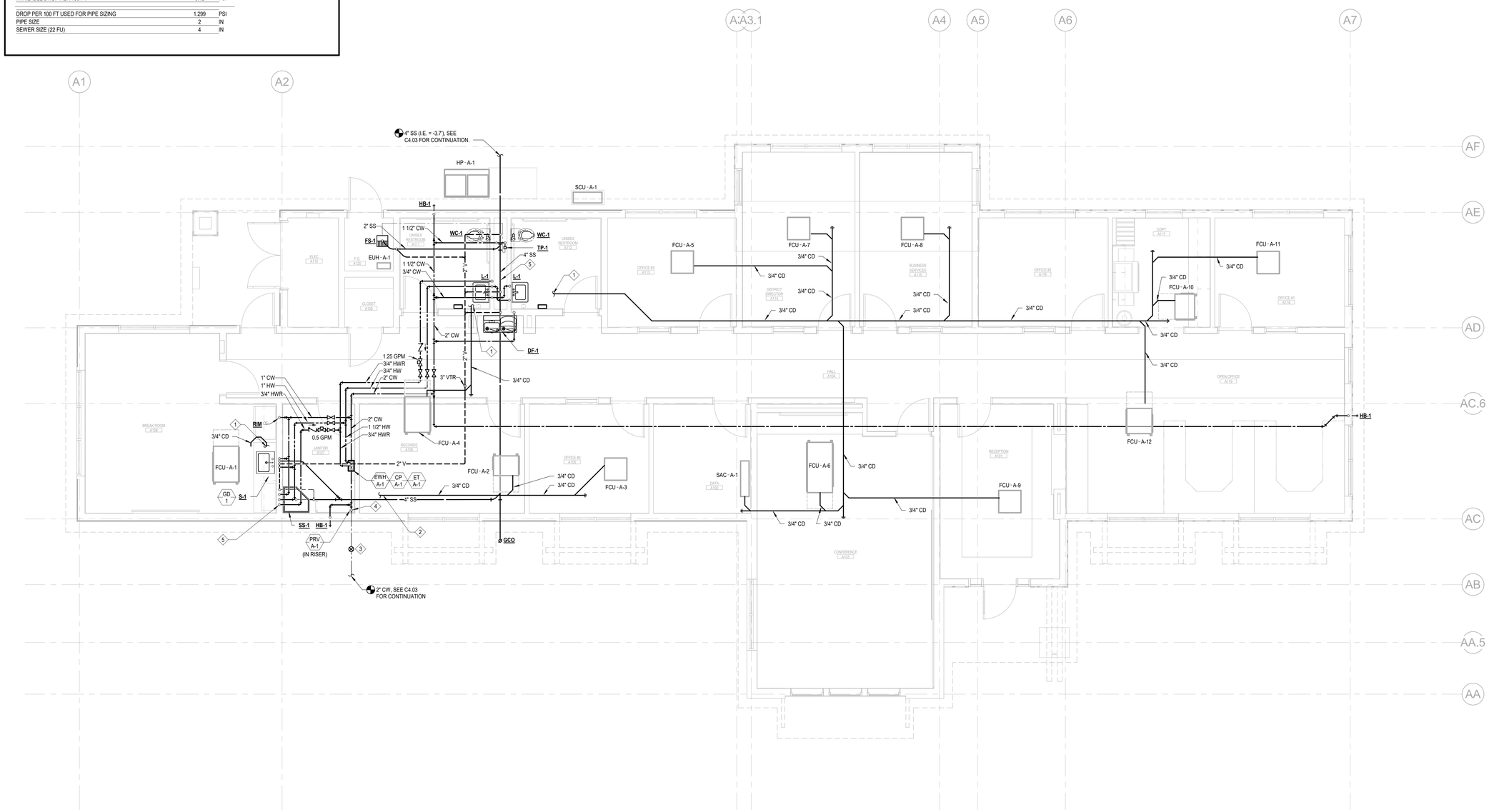

1 P201A ADMINISTRATION BLDG PLUMBING FLOOR PLAN

SCALE: 1/4" = 1'-0"

IDENTIFICATION STAMP
DIV. OF THE STATE ARCHITECT
APP: 02-118630 INC:
REVIEWED FOR
SS ☐ FLS ☐ ACS ☑
DATE: 04/13/2021

OFFICE OF THE STATE FIRE MARSHAL
APPROVED FIRE AND PANIC ONLY
Approval of this plan does not authorize or approve any omission or deviation from applicable regulations. Final approval is subject to field inspection. One set of approved plans shall be available on the project site at all times.
PERMIT NO. 20-N-2332-CP
REVIEWED BY: LEO CATAYLO, OSFM
DATE: 4 / /2021

GENERAL SERVICES
Department of General Services
State of California
Real Estate Services Division
Project Management & Development Branch
707 Third Street, Suite 4-105
West Sacramento, California 95605

NICHOLS MELBURG & ROSSETTO
ARCHITECTS + ENGINEERS
300 Knollcrest Drive
Redding, CA. 96002
(530) 222-3300 (530) 222-3538 FAX
http://www.nmrdesign.com

Copyright © 2019
All ideas, designs, arrangements and plans indicated or represented by this drawing are owned by, and the property of, NICHOLS, MELBURG and ROSSETTO and were created, evolved and developed for use on, and in conjunction with, the specified project. None of such ideas, designs, arrangements or plans shall be used by, or disclosed to any person, firm or corporation for any purpose whatsoever without the written permission of NICHOLS, MELBURG and ROSSETTO.

LICENSE STAMPS

REGISTERED PROFESSIONAL ENGINEER — M 33498 — MECHANICAL — EXPIRES 8/30/22 — STATE OF CALIFORNIA
DATE SIGNED: 10-20-20

CONSULTANT

CAPITAL
Engineering Consultants, Inc.
Rancho Cordova, California
JD - HCJH — PM - DESIGN TEAM
181205.00 — PROJECT NO.

DRAWING STATUS
CONSTRUCTION DOCUMENTS

ISSUE

No.	Date	Description
1	10/22/2020	INITIAL PLAN REVIEW
2	01/22/2021	AGENCY RESUBMITTAL
3	03/22/2021	AGENCY RESUBMITTAL

If drawing is not 30" x 42" it is a reduced print

PROJECT
RESIDENTIAL CENTER, UKIAH: REPLACEMENT OF EXISTING RESIDENTIAL CENTER
440 EAST HILL ROAD
WILLITS, CALIFORNIA 95490
MENDOCINO COUNTY
CALIFORNIA CONSERVATION CORPS

Supervisor	Designed	Drawn
		Author

DSA Application No.
02-118630

SHEET TITLE
ADMINISTRATION BLDG PLUMBING FLOOR PLAN

DGS Project Number	NMR Project Number
0000000000001826	18-6456

Reference North — Sheet Scale: As indicated — Sheet Number: P201A

ISSUE DATE
July 9, 2021

Plot Date: 3/16/2021 1:13:33 PM
File Name: L:\Revit Local Files\EECI_DGS CCC Willits_Admin_MP18\EECI_DGS CCC Willits_Admin_MP18_jdoval.rvt

KEY NOTES:

1. MAINTAIN MINIMUM 10' CLEARANCE BETWEEN OUTSIDE AIR INTAKE AND ALL EXHAUST AIR DISCHARGES AND VENT PIPING THROUGH ROOF (VTRs).

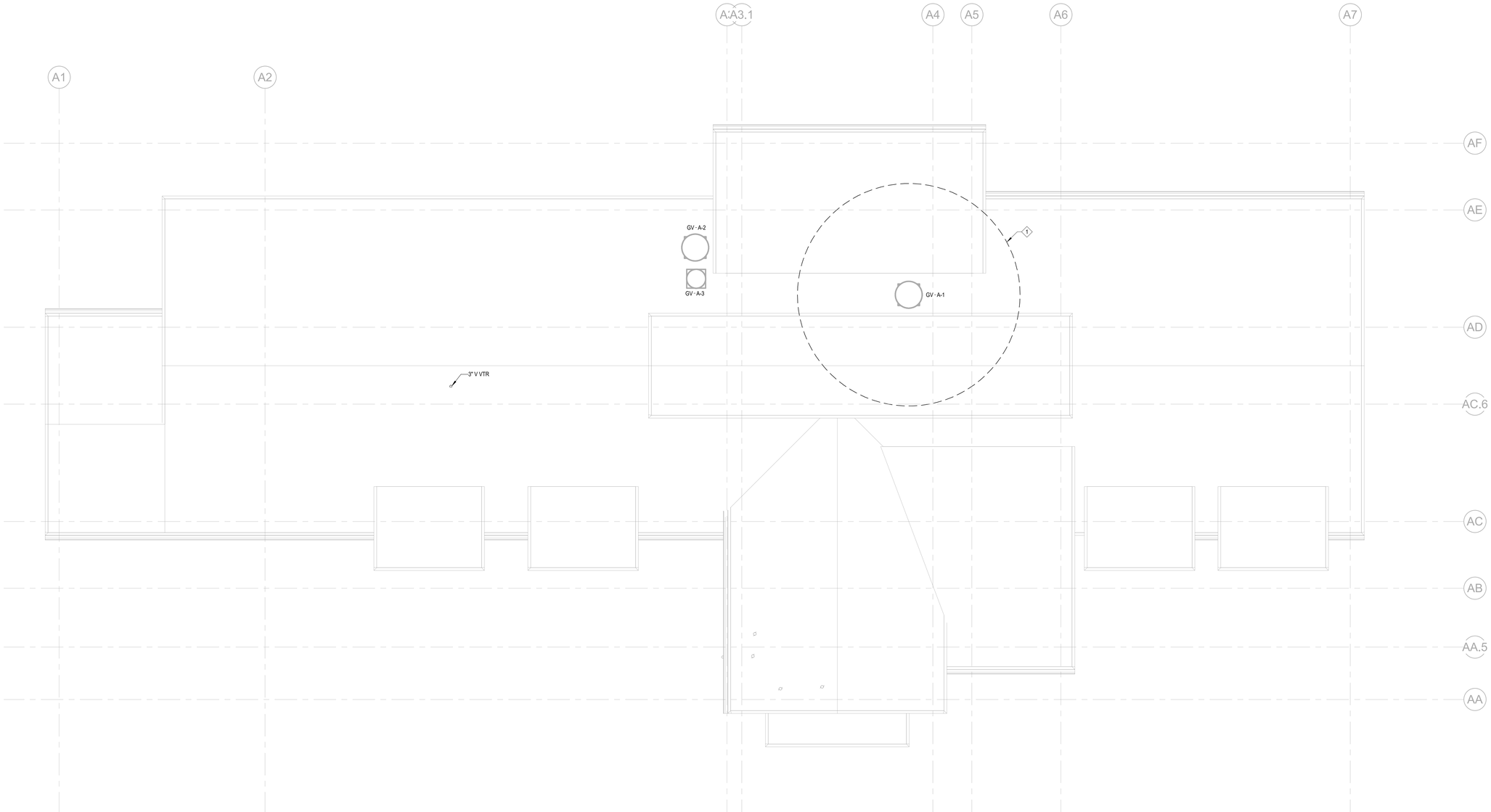

1 P202A ADMINISTRATION BUILDING PLUMBING ROOF PLAN

SCALE: 1/4" = 1'-0"

IDENTIFICATION STAMP
DIV. OF THE STATE ARCHITECT
APP: 02-118630 INC:
REVIEWED FOR
SS ☐ FLS ☐ ACS ☑
DATE: 04/13/2021

OFFICE OF THE STATE FIRE MARSHAL
APPROVED FIRE AND PANIC ONLY
Approval of this plan does not authorize or approve any omission or deviation from applicable regulations. Final approval is subject to field inspection. One set of approved plans shall be available on the project site at all times.
PERMIT NO. 20-N-2332-CP
REVIEWED BY: LEO CATAYLO, OSFM
DATE: 4 / /2021

DGS GENERAL SERVICES
Department of General Services
State of California
Real Estate Services Division
Project Management & Development Branch
707 Third Street, Suite 4-105
West Sacramento, California 95605

NICHOLS MELBURG & ROSSETTO
ARCHITECTS + ENGINEERS
300 Knollcrest Drive
Redding, CA. 96002
(530) 222-3300 (530) 222-3538 FAX
http://www.nmrdesign.com

Copyright © 2019
All ideas, designs, arrangements and plans indicated or represented by this drawing are owned by, and the property of, NICHOLS, MELBURG and ROSSETTO and were created, evolved and developed for use on, and in conjunction with, the specified project. None of such ideas, designs, arrangements or plans shall be used by, or disclosed to any person, firm or corporation for any purpose whatsoever without the written permission of NICHOLS, MELBURG and ROSSETTO.

LICENSE STAMPS

REGISTERED PROFESSIONAL ENGINEER
M 33498
EXPIRES 9/30/22
MECHANICAL
STATE OF CALIFORNIA
DATE SIGNED: 10-20-20

CONSULTANT

CAPITAL
ENGINEERING CONSULTANTS, INC.
RANCHO CORDOVA, CALIFORNIA
JD - HC/JH — PM - DESIGN TEAM
181205.00 — PROJECT NO.

DRAWING STATUS
CONSTRUCTION DOCUMENTS

ISSUE

No.	Date	Description
1	10/22/2020	INITIAL PLAN REVIEW
2	01/22/2021	AGENCY RESUBMITTAL
3	03/22/2021	AGENCY RESUBMITTAL

If drawing is not 30" x 42" it is a reduced print

PROJECT
RESIDENTIAL CENTER, UKIAH: REPLACEMENT OF EXISTING RESIDENTIAL CENTER
440 EAST HILL ROAD
WILLITS, CALIFORNIA 95490
MENDOCINO COUNTY
CALIFORNIA CONSERVATION CORPS

Supervisor	Designed	Drawn
		Author

DSA Application No.
02-118630

SHEET TITLE
ADMINISTRATION BLDG PLUMBING ROOF PLAN

DGS Project Number: 0000000000001826
NMR Project Number: 18-6456

Reference North: GRID NORTH
Sheet Scale: 1/4" = 1'-0"
Sheet Number: P202A

ISSUE DATE
July 9, 2021

Plot Date: 3/18/2021 1:13:34 PM
File Name: L:\Revit Local Files\DECI_DGS CCC Willits_Admin_MP18\DECI_DGS CCC Willits_Admin_MP18_jduval.rvt

PLUMBING FIXTURE CALCULATION

COMET BUILDING

PLUMBING FIXTURE CALCULATION WORKSHEET FOR SIZING WATER AND WASTE MAINS
FROM 2019 CALIFORNIA PLUMBING CODE, APPENDIX A (DOMESTIC WATER), CHAPTER 7 (WASTE).

FIXTURE		COLD WATER		HOT WATER	WASTE	
NO.	TYPE	FU	TOTAL	TOTAL @ 75%	FU	TOTAL
6	WC (F.V.)	5	30	-	4	24
3	UR	4	12	-	2	6
2	DF/EWC	0.5	1	-	0.5	1
1	HB (1ST ONLY)	2.5	2.5	-	0	0
1	HB (EA ADD.)	1	1	-	0	0
8	LAV (PUB)	1	8	6	2	16
2	SS	3	6	4.5	3	6
8	SH	2	16	12	2	16
2	FS (2")	0	0	-	2	4
2	FD (2")	0	0	-	0	0
	TOTAL UNITS		76.5	22.5		73

SYSTEM IS SIZED USING FLUSH VALVES:

TOTAL CW SIZE TO SERVICE (76.5 FU)	60	GPM
PRESSURE AT BUILDING P.O.C.	60	PSI
HIGHEST FIXTURE	12	FT
PRESSURE LOSS FROM HEIGHT	5.2	PSI
PRESSURE LOSS FROM METER	5	PSI
PRESSURE LOSS FROM OTHER DEVICES	15	PSI
TOTAL PRESSURE LOSS	25.2	PSI
REQUIRED AT CRITICAL FIXTURE	30	PSI
PRESSURE AVAILABLE FOR FRICTION LOSS	4.8	PSI
TOTAL DEVELOPED LENGTH	115	FT
AVAILABLE DROP PER 100 FT	4.17	PSI
DROP PER 100 FT USED FOR PIPE SIZING	1.299	PSI
PIPE SIZE	3	IN
SEWER SIZE (73 FU)	4	IN

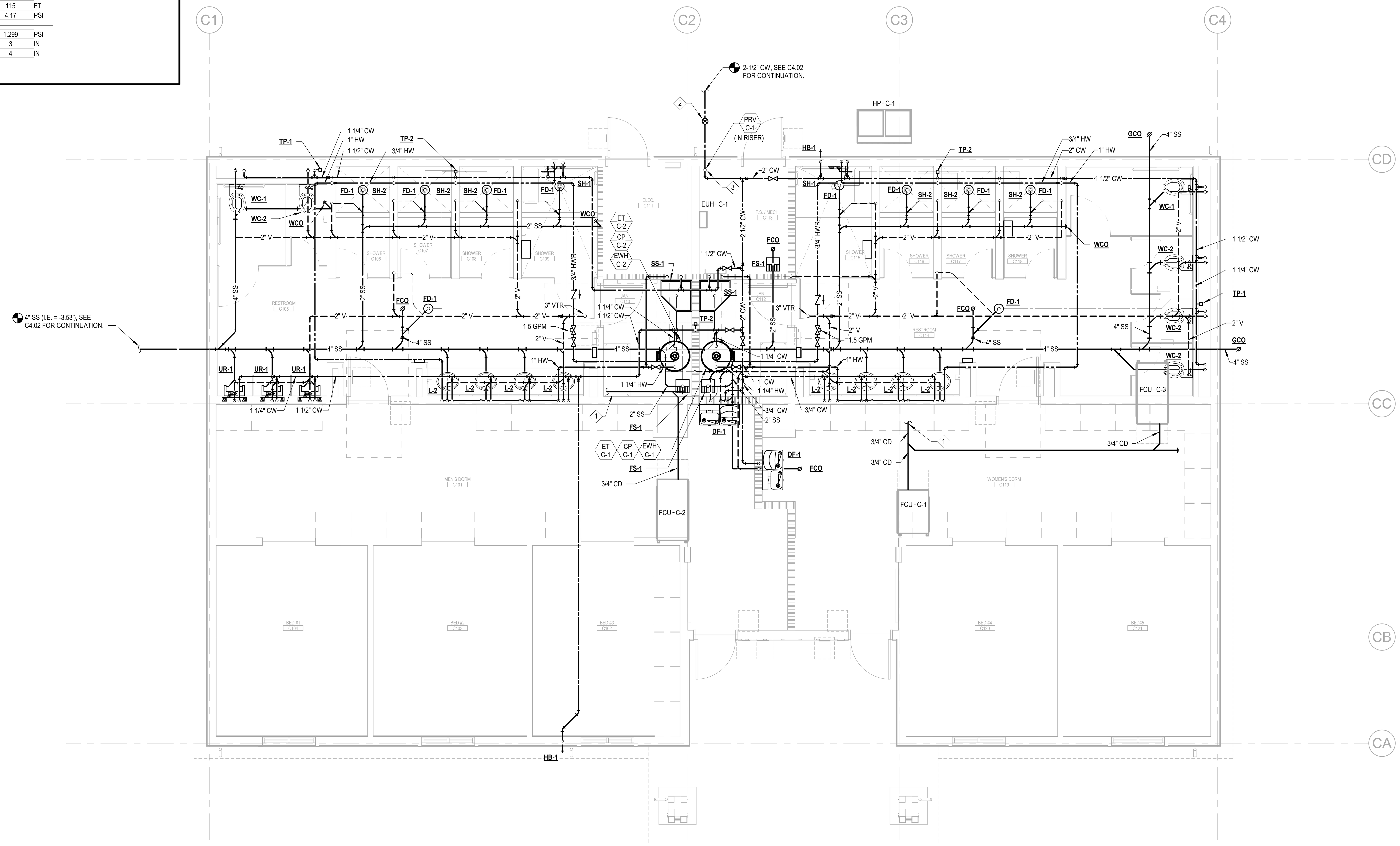

KEY NOTES:

1. DISCHARGE 3/4" CONDENSATE TO SINK/LAV TAILPIECE.
2. DOMESTIC WATER BUILDING SHUT-OFF VALVE, IN VALVE BOX.
3. BUILDING WATER METER, PROVIDED BY BAS CONTRACTOR. COORDINATE LOCATION AND INSTALLATION WITH DIV 22. SEE 2/M604 AND 1/M600.

1 P201C — COMET BLDG PLUMBING FLOOR PLAN
SCALE: 1/4" = 1'-0"

Plot Date: 3/19/2021 1:29:55 PM
File Name: L:\Revit Local Files\CECI_DGS CCC Willits_Comet_MP18_Central_jduvalKTH47.rvt

IDENTIFICATION STAMP
DIV. OF THE STATE ARCHITECT
APP: 02-118630 INC:
REVIEWED FOR
SS ☐ FLS ☐ ACS ☑
DATE: 04/13/2021

OFFICE OF THE STATE FIRE MARSHAL
APPROVED FIRE AND PANIC ONLY
Approval of this plan does not authorize or approve any omission or deviation from applicable regulations. Final approval is subject to field inspection. One set of approved plans shall be available on the project site at all times.
PERMIT NO.: 20-N-2332-CP
REVIEWED BY: LITO CATAYLO, OSFM
DATE: 4/1/2021

DGS GENERAL SERVICES
Department of General Services
State of California
Real Estate Services Division
Project Management & Development Branch
707 Third Street, Suite 4-105
West Sacramento, California 95605

NM&R
NICHOLS MELBURG & ROSSETTO
ARCHITECTS + ENGINEERS
300 Knollcrest Drive
Redding, CA. 96002
(530) 222-3300 (530) 222-3538 FAX
http://www.nmrdesign.com

Copyright © 2019
All ideas, designs, arrangements and plans indicated or represented by this drawing are owned by, and the property of, NICHOLS, MELBURG and ROSSETTO and were created, evolved and developed for use on, and in conjunction with, the specified project. None of such ideas, designs, arrangements or plans shall be used by, or disclosed to any person, firm or corporation for any purpose whatsoever without the written permission of NICHOLS, MELBURG and ROSSETTO.

LICENSE STAMPS
REGISTERED PROFESSIONAL ENGINEER — M 33498 — EXPIRES 9/30/22 — MECHANICAL — STATE OF CALIFORNIA
DATE SIGNED: 10-20-20

CONSULTANT
CAPITAL ENGINEERING CONSULTANTS, INC.
RANCHO CORDOVA, CALIFORNIA
JD - HC/JH — PM - DESIGN TEAM
181205.00 — PROJECT NO.

DRAWING STATUS
CONSTRUCTION DOCUMENTS

ISSUE

No.	Date	Description
1	10/22/2020	INITIAL PLAN REVIEW
2	01/22/2021	AGENCY RESUBMITTAL
3	03/22/2021	AGENCY RESUBMITTAL

If drawing is not 30" x 42" it is a reduced print

PROJECT
RESIDENTIAL CENTER, UKIAH: REPLACEMENT OF EXISTING RESIDENTIAL CENTER
440 EAST HILL ROAD
WILLITS, CALIFORNIA 95490
MENDOCINO COUNTY
CALIFORNIA CONSERVATION CORP

Supervisor	Designed	Drawn
		Author

DSA Application No.
02-118630

SHEET TITLE
COMET BLDG PLUMBING FLOOR PLAN

DGS Project Number: 000000000001826
NMR Project Number: 18-6456

Reference North: NORTH
Sheet Scale: As indicated
Sheet Number: P201C

ISSUE DATE
July 9, 2021

PLUMBING FIXTURE CALCULATION

COMET BUILDING

PLUMBING FIXTURE CALCULATION WORKSHEET FOR SIZING WATER AND WASTE MAINS
FROM 2019 CALIFORNIA PLUMBING CODE, APPENDIX A (DOMESTIC WATER), CHAPTER 7 (WASTE).

FIXTURE NO.	TYPE	COLD WATER FU	COLD WATER TOTAL	HOT WATER TOTAL @ 75%	WASTE FU	WASTE TOTAL
7	WC (F.V.)	5	35	-	4	28
2	UR	4	8	-	2	4
1	DF/EWC	0.5	0.5	-	0.5	0.5
1	HB (1ST ONLY)	2.5	2.5	-	0	0
2	HB (EA ADD.)	1	2	-	0	0
6	LAV (PUB)	1	6	4.5	2	12
1	LAV (PRI)	1	1	0.75	1	1
1	SS	3	3	2.25	3	3
1	FS (2")	0	0	-	2	2
2	FD (2")	0	0	-	0	0
	TOTAL UNITS		58	7.5		50.5

SYSTEM IS SIZED USING FLUSH VALVES:

TOTAL CW SIZE TO SERVICE (58 FU)	53	GPM
PRESSURE AT BUILDING P.O.C.	60	PSI
HIGHEST FIXTURE	8	FT
PRESSURE LOSS FROM HEIGHT	3.5	PSI
PRESSURE LOSS FROM METER	5	PSI
PRESSURE LOSS FROM OTHER DEVICES	15	PSI
TOTAL PRESSURE LOSS	23.5	PSI
REQUIRED AT CRITICAL FIXTURE	30	PSI
PRESSURE AVAILABLE FOR FRICTION LOSS	6.5	PSI
TOTAL DEVELOPED LENGTH	156	FT
AVAILABLE DROP PER 100 FT	4.17	PSI
DROP PER 100 FT USED FOR PIPE SIZING	1.299	PSI
PIPE SIZE	2-1/2	IN
SEWER SIZE (50.5 FU)	4	IN

KEY NOTES:

1. DISCHARGE 3/4" CONDENSATE TO SINK/LAV TAILPIECE.
2. DOMESTIC WATER BUILDING SHUT-OFF VALVE, IN VALVE BOX.
3. BUILDING WATER METER, PROVIDED BY BAS CONTRACTOR. COORDINATE LOCATION AND INSTALLATION WITH DIV 22. SEE 2/M604 AND 1/M600.

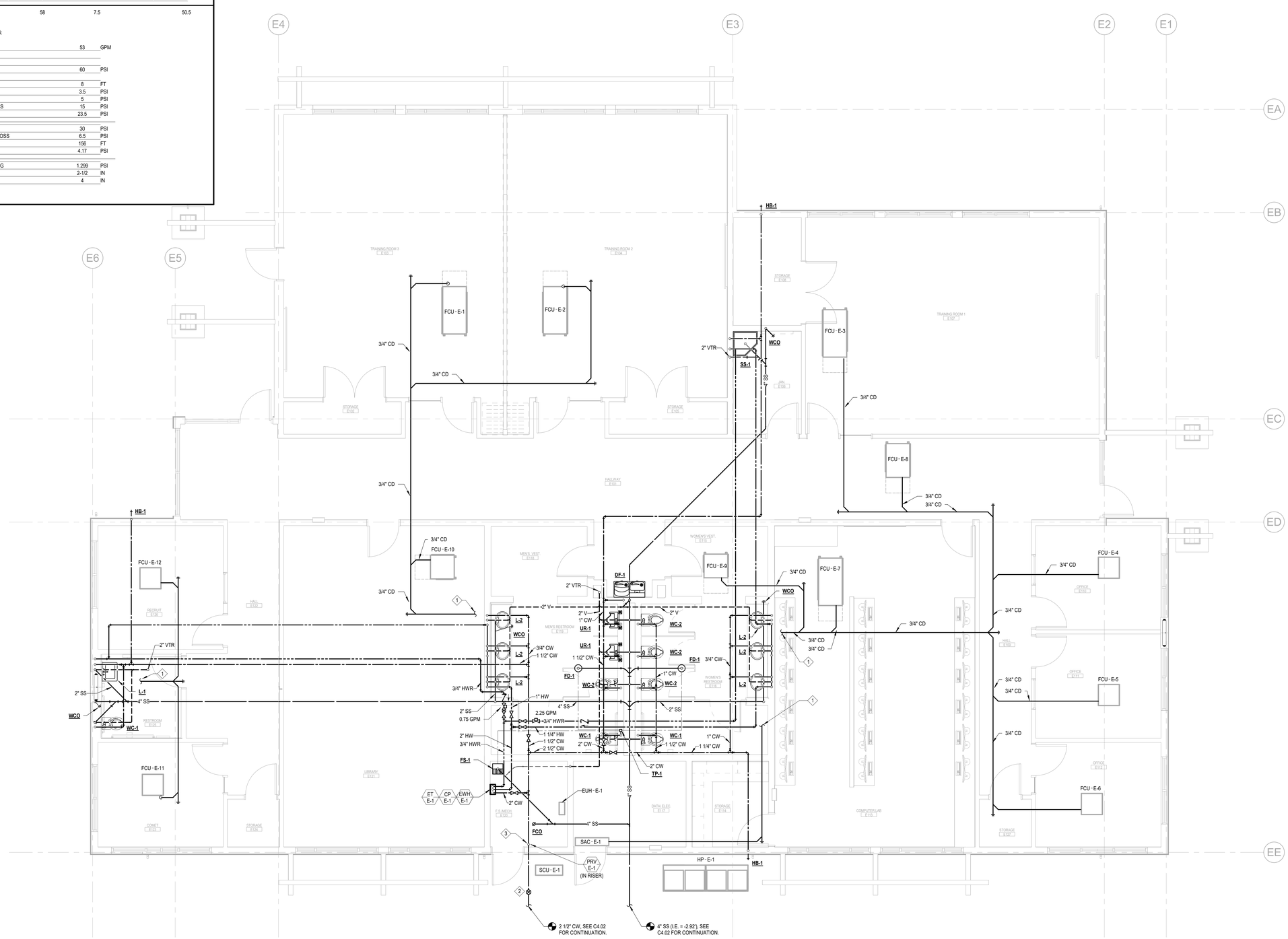

1 P201E EDUCATION BLDG PLUMBING FLOOR PLAN

SCALE: 1/4" = 1'-0"

Plot Date: 3/18/2021 1:28:32 PM
File Name: L:\Revit Local Files\EDCI_DGS CCC Willits_ED_MP18_Central_jdavisKTH47.rvt

IDENTIFICATION STAMP
DIV. OF THE STATE ARCHITECT
APP: 02-118630 INC:
REVIEWED FOR
SS ☐ FLS ☐ ACS ☑
DATE: 04/13/2021

OFFICE OF THE STATE FIRE MARSHAL
APPROVED FIRE AND PANIC ONLY
Approval of this plan does not authorize or approve any omission or deviation from applicable regulations. Final approval is subject to field inspection. One set of approved plans shall be available on the project site at all times.
PERMIT NO. 20-N-2332-CP
REVIEWED BY: LEO CATAYLO, OSFM
DATE: 4 / /2021

GENERAL SERVICES
Department of General Services
State of California
Real Estate Services Division
Project Management & Development Branch
707 Third Street, Suite 4-105
West Sacramento, California 95605

NICHOLS MELBURG & ROSSETTO ARCHITECTS + ENGINEERS
300 Knollcrest Drive
Redding, CA. 96002
(530) 222-3300 (530) 222-3538 FAX
http://www.nmrdesign.com

Copyright © 2019
All ideas, designs, arrangements and plans indicated or represented by this drawing are owned by, and the property of, NICHOLS, MELBURG and ROSSETTO and were created, evolved and developed for use on, and in conjunction with, the specified project. None of such ideas, designs, arrangements or plans shall be used by, or disclosed to any person, firm or corporation for any purpose whatsoever without the written permission of NICHOLS, MELBURG and ROSSETTO.

LICENSE STAMPS

REGISTERED PROFESSIONAL ENGINEER
TIMOTHY K. HOLT DAVIS
M 33498
EXPIRES 9/30/22
MECHANICAL
STATE OF CALIFORNIA
DATE SIGNED: 10-20-20

CONSULTANT

CAPITAL
ENGINEERING CONSULTANTS, INC.
RANCHO CORDOVA, CALIFORNIA
JD - HCJH (PM - DESIGN TEAM)
181205.00 (PROJECT NO.)

DRAWING STATUS
CONSTRUCTION DOCUMENTS

ISSUE

No.	Date	Description
1	10/22/2020	INITIAL PLAN REVIEW
2	01/22/2021	AGENCY RESUBMITTAL
3	03/22/2021	AGENCY RESUBMITTAL

If drawing is not 30" x 42" it is a reduced print

PROJECT
RESIDENTIAL CENTER, UKIAH: REPLACEMENT OF EXISTING RESIDENTIAL CENTER
440 EAST HILL ROAD
WILLITS, CALIFORNIA 95490
MENDOCINO COUNTY
CALIFORNIA CONSERVATION CORP

Supervisor	Designed	Drawn
		Author

DSA Application No.
02-118630

SHEET TITLE
EDUCATION BLDG PLUMBING FLOOR PLAN

DGS Project Number	NMR Project Number
0000000000001826	18-6456

Reference North
Sheet Scale: As indicated
Sheet Number: P201E

ISSUE DATE
July 9, 2021

PLUMBING FIXTURE CALCULATION

MEN'S HOUSING BUILDING

PLUMBING FIXTURE CALCULATION WORKSHEET FOR SIZING WATER AND WASTE MAINS
FROM 2019 CALIFORNIA PLUMBING CODE, APPENDIX A (DOMESTIC WATER), CHAPTER 7 (WASTE).

FIXTURE NO.	TYPE	COLD WATER FU	COLD WATER TOTAL	HOT WATER TOTAL @ 75%	WASTE FU	WASTE TOTAL
3	WC (F.V., PUB)	5	15	-	4	12
1	WC (F.V., PRI)	5	5	-	3	3
3	UR	4	12	-	2	6
1	DF/EWC	0.5	0.5	-	0.5	0.5
1	HB (1ST ONLY)	2.5	2.5	-	0	0
2	HB (EA ADD.)	1	2	-	0	0
4	LAV (PUB)	1	4	3	2	8
1	LAV (PRI)	1	1	0.75	1	1
1	SS	3	3	2.25	3	3
5	SH	2	10	7.5	2	10
1	FS (2")	0	0	-	2	2
1	FD (2")	0	0	-	0	0
	TOTAL UNITS		55	13.5		45.5

SYSTEM IS SIZED USING FLUSH VALVES:

TOTAL CW SIZE TO SERVICE (55 FU)	52	GPM
PRESSURE AT BUILDING P.O.C.	60	PSI
HIGHEST FIXTURE	12	FT
PRESSURE LOSS FROM HEIGHT	5.2	PSI
PRESSURE LOSS FROM METER	5	PSI
PRESSURE LOSS FROM OTHER DEVICES	15	PSI
TOTAL PRESSURE LOSS	25.2	PSI
REQUIRED AT CRITICAL FIXTURE	30	PSI
PRESSURE AVAILABLE FOR FRICTION LOSS	4.8	PSI
TOTAL DEVELOPED LENGTH	120	FT
AVAILABLE DROP PER 100 FT	4.0	PSI
DROP PER 100 FT USED FOR PIPE SIZING	1.299	PSI
PIPE SIZE	2-1/2	IN
SEWER SIZE (45.5 FU)	4	IN

KEYNOTES:

1. DISCHARGE 3/4" CONDENSATE TO SINK/LAV TAILPIECE.
2. DOMESTIC WATER BUILDING SHUT-OFF VALVE, IN VALVE BOX.
3. BUILDING WATER METER, PROVIDED BY BAS CONTRACTOR. COORDINATE LOCATION AND INSTALLATION WITH DIV 22. SEE 2/M604 AND 1/M600.

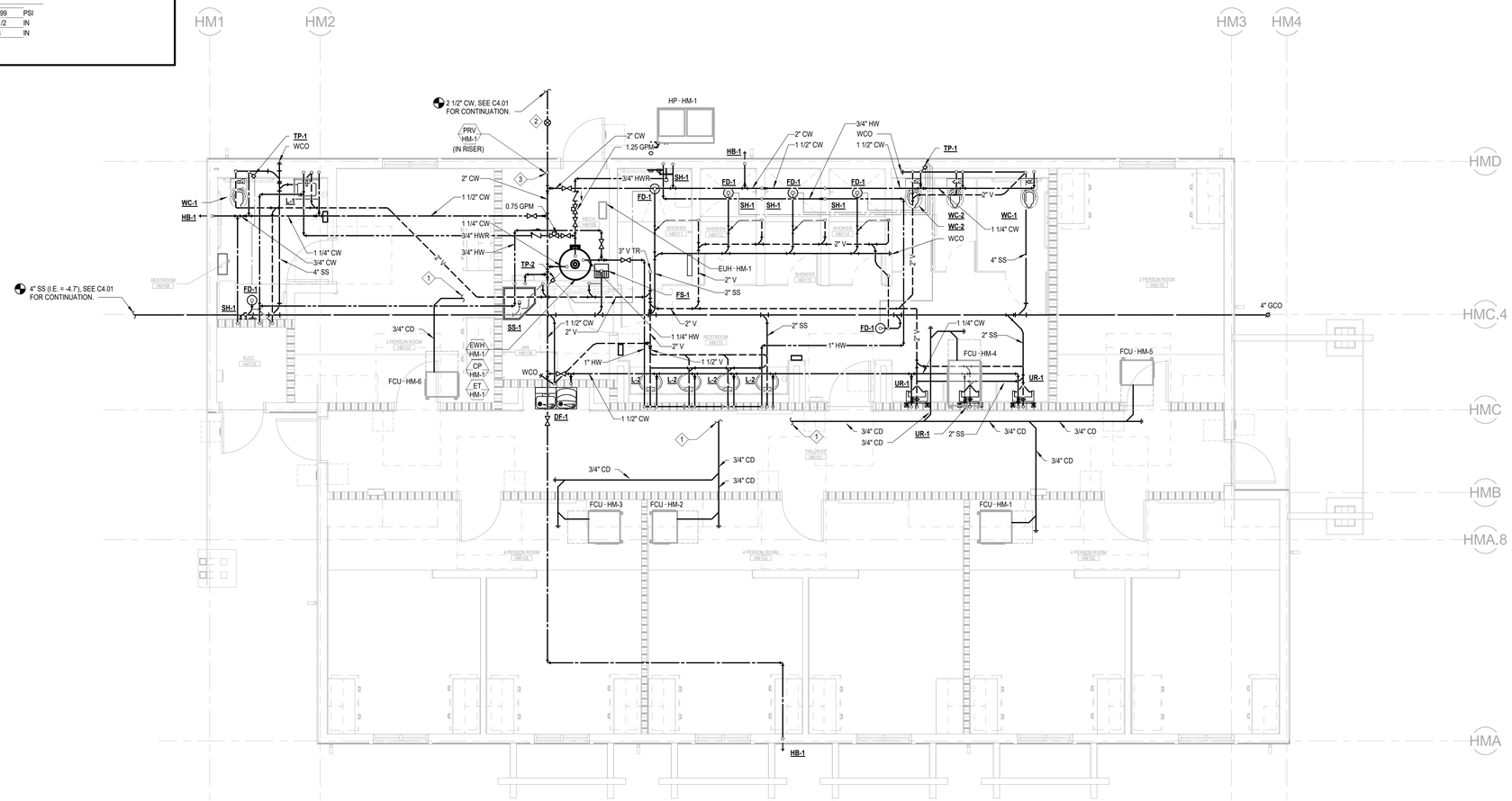

1 P201HM — MEN'S HOUSING PLUMBING FLOOR PLAN

SCALE: 1/4" = 1'-0"

IDENTIFICATION STAMP
DIV. OF THE STATE ARCHITECT
APP: 02-118630 INC:
REVIEWED FOR
SS ☐ FLS ☐ ACS ☑
DATE: 04/13/2021

OFFICE OF THE STATE FIRE MARSHAL
APPROVED FIRE AND PANIC ONLY
Approval of this plan does not authorize or approve any omission or deviation from applicable regulations. Final approval is subject to field inspection. One set of approved plans shall be available on the project site at all times.
PERMIT NO. 20-N-2332-CP
REVIEWED BY: LEO CATAYLO, OSFM
DATE: 4 / /2021

DGS GENERAL SERVICES
Department of General Services
State of California
Real Estate Services Division
Project Management & Development Branch
707 Third Street, Suite 4-105
West Sacramento, California 95605

NICHOLS MELBURG & ROSSETTO ARCHITECTS + ENGINEERS
300 Knollcrest Drive
Redding, CA. 96002
(530) 222-3300 (530) 222-3538 FAX
http://www.nmrdesign.com

Copyright © 2019
All ideas, designs, arrangements and plans indicated or represented by this drawing are owned by, and the property of, NICHOLS, MELBURG and ROSSETTO and were created, evolved and developed for use on, and in conjunction with, the specified project. None of such ideas, designs, arrangements or plans shall be used by, or disclosed to any person, firm or corporation for any purpose whatsoever without the written permission of NICHOLS, MELBURG and ROSSETTO.

LICENSE STAMPS

REGISTERED PROFESSIONAL ENGINEER — DAVID M. DWYER — M 33498 — EXPIRES 9/30/22 — MECHANICAL — STATE OF CALIFORNIA
DATE SIGNED: 10-20-20

CONSULTANT

CAPITAL ENGINEERING CONSULTANTS, INC.
RANCHO CORDOVA, CALIFORNIA
JD - HCUH — PM - DESIGN TEAM
181205.00 — PROJECT NO.

DRAWING STATUS
CONSTRUCTION DOCUMENTS

ISSUE

No.	Date	Description
1	10/22/2020	INITIAL PLAN REVIEW
2	01/22/2021	AGENCY RESUBMITTAL
3	03/22/2021	AGENCY RESUBMITTAL

If drawing is not 30" x 42" it is a reduced print

PROJECT
RESIDENTIAL CENTER, UKIAH: REPLACEMENT OF EXISTING RESIDENTIAL CENTER
440 EAST HILL ROAD
WILLITS, CALIFORNIA 95490
MENDOCINO COUNTY
CALIFORNIA CONSERVATION CORP

Supervisor	Designed	Drawn
		Author

DSA Application No.
02-118630

SHEET TITLE
MEN'S HOUSING PLUMBING FLOOR PLAN

DGS Project Number	NMR Project Number
000000000001826	18-6456

Reference North — Sheet Scale: As indicated
Sheet Number: P201HM

ISSUE DATE
July 9, 2021

Plot Date: 3/19/2021 1:27:32 PM
File Name: L:\Revit Local Files\CEC_DGS CCC Willits_Dorm_Men_MP18_Central_jdurall\KTH47.rvt

PLUMBING FIXTURE CALCULATION

WOMEN'S HOUSING BUILDING

PLUMBING FIXTURE CALCULATION WORKSHEET FOR SIZING WATER AND WASTE MAINS
FROM 2019 CALIFORNIA PLUMBING CODE, APPENDIX A (DOMESTIC WATER), CHAPTER 7 (WASTE).

FIXTURE NO.	TYPE	COLD WATER FU	COLD WATER TOTAL	HOT WATER TOTAL @ 75%	WASTE FU	WASTE TOTAL
4	WC (F.V., PUB)	5	20	-	4	16
1	WC (F.V., PRI)	5	5	-	3	3
0	UR	4	0	-	2	0
1	DF/EWC	0.5	0.5	-	0.5	0.5
1	HB (1ST ONLY)	2.5	2.5	-	0	0
2	HB (EA ADD.)	1	2	-	0	0
4	LAV (PUB)	1	4	3	2	8
1	LAV (PRI)	1	1	0.75	1	1
1	SS	3	3	2.25	3	3
5	SH	2	10	7.5	2	10
1	FS (2")	0	0	-	2	2
1	FD (2")	0	0	-	0	0
	TOTAL UNITS		48	13.5		43.5

SYSTEM IS SIZED USING FLUSH VALVES:

TOTAL CW SIZE TO SERVICE (48 FU)	49	GPM
PRESSURE AT BUILDING P.O.C.	60	PSI
HIGHEST FIXTURE	12	FT
PRESSURE LOSS FROM HEIGHT	5.2	PSI
PRESSURE LOSS FROM METER	5	PSI
PRESSURE LOSS FROM OTHER DEVICES	15	PSI
TOTAL PRESSURE LOSS	25.2	PSI
REQUIRED AT CRITICAL FIXTURE	30	PSI
PRESSURE AVAILABLE FOR FRICTION LOSS	4.8	PSI
TOTAL DEVELOPED LENGTH	120	FT
AVAILABLE DROP PER 100 FT	4.0	PSI
DROP PER 100 FT USED FOR PIPE SIZING	1.299	PSI
PIPE SIZE	2-1/2	IN
SEWER SIZE (43.5 FU)	4	IN

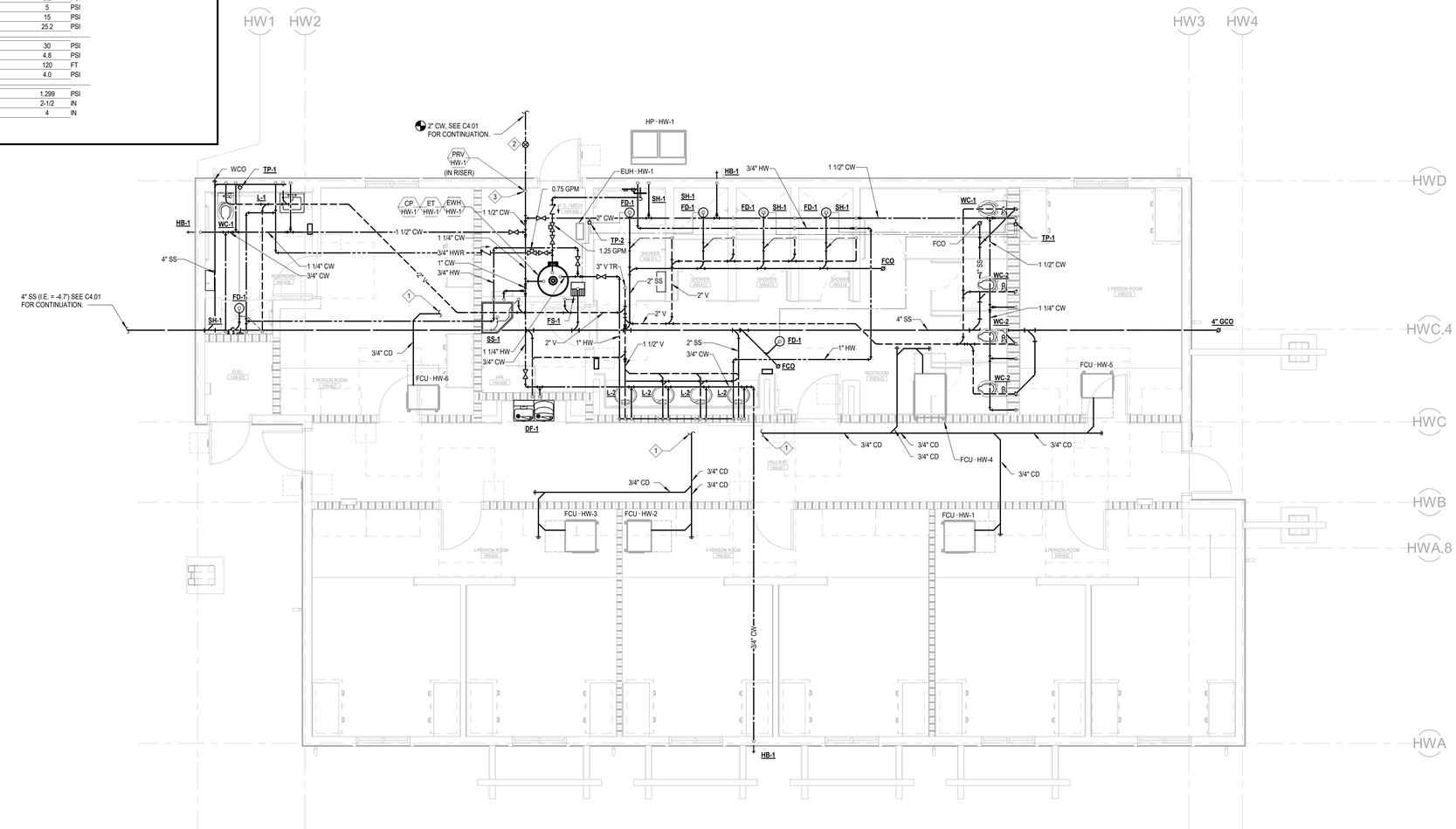

KEYNOTES:

1. DISCHARGE 3/4" CONDENSATE TO SINK/LAV TAILPIECE.
2. DOMESTIC WATER BUILDING SHUT-OFF VALVE, IN VALVE BOX.
3. BUILDING WATER METER, PROVIDED BY BAS CONTRACTOR. COORDINATE LOCATION AND INSTALLATION WITH DIV 22. SEE 2/M604 AND 1/M600.

1 P201HW WOMEN'S HOUSING PLUMBING FLOOR PLAN
SCALE: 1/4" = 1'-0"

IDENTIFICATION STAMP
DIV. OF THE STATE ARCHITECT
APP: 02-118630 INC:
REVIEWED FOR
SS ☐ FLS ☐ ACS ☑
DATE: 04/13/2021

OFFICE OF THE STATE FIRE MARSHAL
APPROVED FIRE AND PANIC ONLY
Approval of this plan does not authorize or approve any omission or deviation from applicable regulations. Final approval is subject to field inspection. One set of approved plans shall be available on the project site at all times.
PERMIT NO. 20-N-2332-CP
REVIEWED BY: LEO CATAYLO, OSFM
DATE: 4 / /2021

GENERAL SERVICES
Department of General Services
State of California
Real Estate Services Division
Project Management & Development Branch
707 Third Street, Suite 4-105
West Sacramento, California 95605

NICHOLS MELBURG & ROSSETTO ARCHITECTS + ENGINEERS
300 Knollcrest Drive
Redding, CA. 96002
(530) 222-3300 (530) 222-3538 FAX
http://www.nmrdesign.com

Copyright © 2019
All ideas, designs, arrangements and plans indicated or represented by this drawing are owned by, and the property of, NICHOLS, MELBURG and ROSSETTO and were created, evolved and developed for use on, and in conjunction with, the specified project. None of such ideas, designs, arrangements or plans shall be used by, or disclosed to any person, firm or corporation for any purpose whatsoever without the written permission of NICHOLS, MELBURG and ROSSETTO

LICENSE STAMPS

REGISTERED PROFESSIONAL ENGINEER — KEVIN S. BRANT — M 33498 — EXPIRES 9/30/22 — MECHANICAL — STATE OF CALIFORNIA
DATE SIGNED: 10-20-20

CONSULTANT

CAPITAL ENGINEERING CONSULTANTS, INC.
RANCHO CORDOVA, CALIFORNIA
JD - HC/JH — PM - DESIGN TEAM
181205.00 — PROJECT NO.

DRAWING STATUS
CONSTRUCTION DOCUMENTS

ISSUE

No.	Date	Description
1	10/22/2020	INITIAL PLAN REVIEW
2	01/22/2021	AGENCY RESUBMITTAL
3	03/22/2021	AGENCY RESUBMITTAL

If drawing is not 30" x 42" it is a reduced print

PROJECT
RESIDENTIAL CENTER, UKIAH: REPLACEMENT OF EXISTING RESIDENTIAL CENTER
440 EAST HILL ROAD
WILLITS, CALIFORNIA 95490
MENDOCINO COUNTY
CALIFORNIA CONSERVATION CORP

Supervisor	Designed	Drawn
		Author

DSA Application No.
02-118630

SHEET TITLE
WOMEN'S HOUSING PLUMBING FLOOR PLAN

DGS Project Number: 0000000000001826
NMR Project Number: 18-6456

Reference North
Sheet Scale: As indicated
Sheet Number: P201HW

ISSUE DATE
July 9, 2021

Plot Date: 3/16/2021 12:03:08 PM
File Name: L:\Revit Local Files\CEC_DGS CCC Willits_Dorm_Women_MP18_Central_jduvall\KTH47.rvt

SHEET NOTES:

1. KITCHEN EQUIPMENT TAGS SHOWN FOR REFERENCE ONLY. SEE FOOD SERVICE FS-xxx SHEET SERIES FOR MORE INFORMATION.

   (XX) — KITCHEN EQUIPMENT TAG

KEY NOTES:

1. DISCHARGE 3/4" CONDENSATE DRAIN TO FLOOR SINK.
2. DOMESTIC WATER BUILDING SHUT-OFF VALVE, IN VALVE BOX.
3. PROVIDE VACUUM BREAKER AT WATER CONNECTION TO FOOD SERVICE FIXTURE/EQUIPMENT, FOR ANTI-SIPHON PROTECTION.
4. SPILL OVERFLOW RAINWATER LEADER 12" ABOVE FINISHED GRADE WITH DOWNSPOUT NOZZLE. SEE 3/P501.

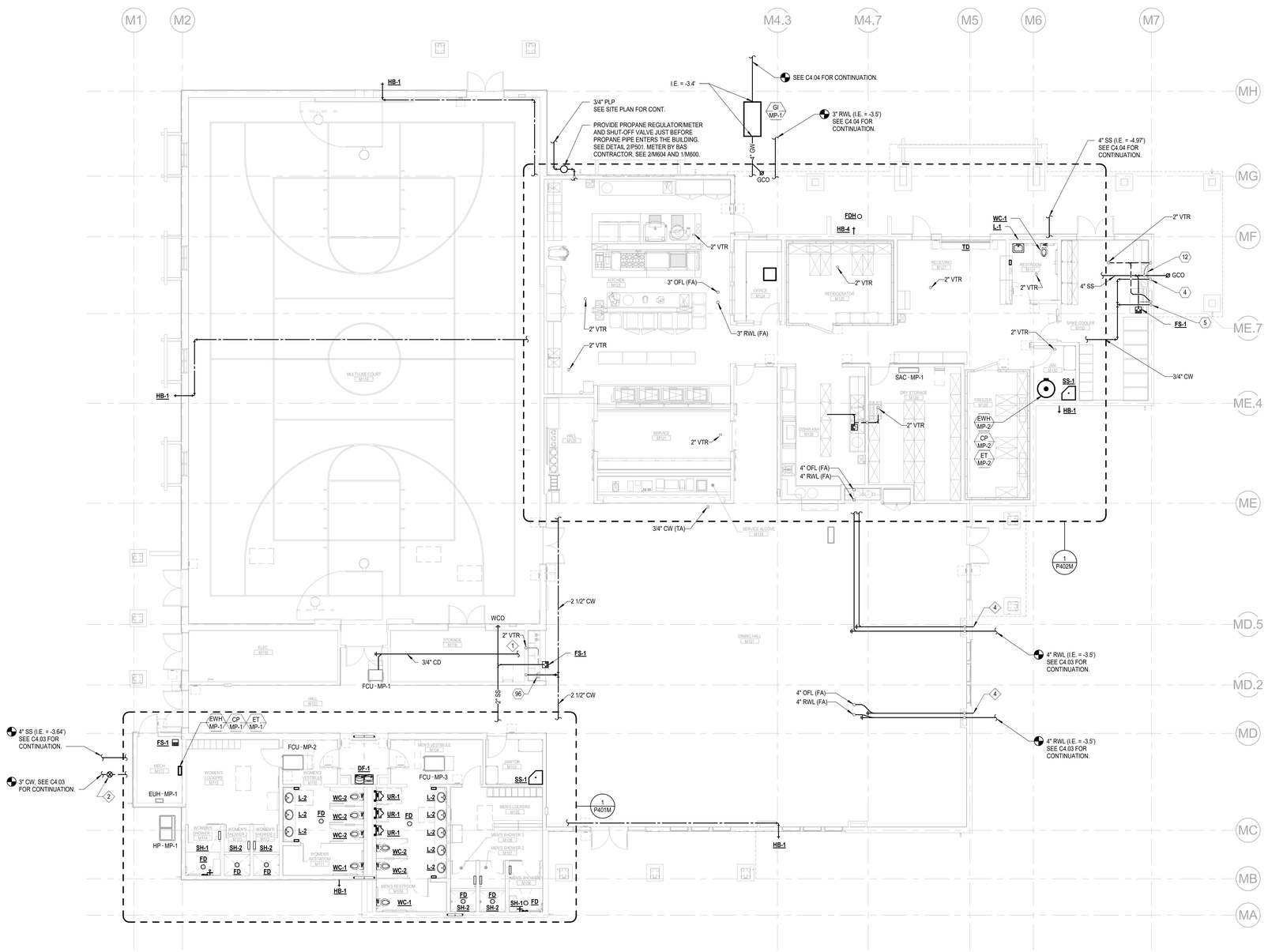

1 P201M — MULTI-PURPOSE BLDG PLUMBING FLOOR PLAN

SCALE: 1/8" = 1'-0"

IDENTIFICATION STAMP
DIV. OF THE STATE ARCHITECT
APP: 02-118630 INC:
REVIEWED FOR
SS ☐ FLS ☐ ACS ☑
DATE: 04/13/2021

OFFICE OF THE STATE FIRE MARSHAL
APPROVED FIRE AND PANIC ONLY
Approval of this plan does not authorize or approve any omission or deviation from applicable regulations. Final approval is subject to field inspection. One set of approved plans shall be available on the project site at all times.
PERMIT NO. 20-N-2332-CP
REVIEWED BY: LEO CATAYLO, OSFM
DATE: 4 / /2021

DGS GENERAL SERVICES
Department of General Services
State of California
Real Estate Services Division
Project Management & Development Branch
707 Third Street, Suite 4-105
West Sacramento, California 95605

NICHOLS MELBURG & ROSSETTO ARCHITECTS + ENGINEERS
300 Knollcrest Drive
Redding, CA. 96002
(530) 222-3300 (530) 222-3538 FAX
http://www.nmrdesign.com

Copyright © 2019
All ideas, designs, arrangements and plans indicated or represented by this drawing are owned by, and the property of, NICHOLS, MELBURG and ROSSETTO and were created, evolved and developed for use on, and in conjunction with, the specified project. None of such ideas, designs, arrangements or plans shall be used by, or disclosed to any person, firm or corporation for any purpose whatsoever without the written permission of NICHOLS, MELBURG and ROSSETTO.

LICENSE STAMPS

REGISTERED PROFESSIONAL ENGINEER — M 33498 — EXPIRES 9/30/22 — MECHANICAL — STATE OF CALIFORNIA
DATE SIGNED: 10-20-20

CONSULTANT

CAPITAL ENGINEERING CONSULTANTS, INC.
RANCHO CORDOVA, CALIFORNIA
JD - HC/JH — PM - DESIGN TEAM
181205.00 — PROJECT NO.

DRAWING STATUS
CONSTRUCTION DOCUMENTS

ISSUE

No.	Date	Description
1	10/22/2020	INITIAL PLAN REVIEW
2	01/22/2021	AGENCY RESUBMITTAL
3	03/22/2021	AGENCY RESUBMITTAL

If drawing is not 30" x 42" it is a reduced print

PROJECT
RESIDENTIAL CENTER, UKIAH: REPLACEMENT OF EXISTING RESIDENTIAL CENTER
440 EAST HILL ROAD
WILLITS, CALIFORNIA 95490
MENDOCINO COUNTY
CALIFORNIA CONSERVATION CORP

Supervisor	Designed	Drawn
		Author

DSA Application No.
02-118630

SHEET TITLE
MULTI-PURPOSE BLDG PLUMBING FLOOR PLAN

DGS Project Number: 0000000000001826
NMR Project Number: 18-6456

Reference North
Sheet Scale: 1/8" = 1'-0"
Sheet Number: P201M

ISSUE DATE
July 9, 2021

Plot Date: 3/19/2021 1:28:15 PM
File Name: L:\Revit Local\Files\DEC_DGS CCC Willits_MP_MP18_Central_jdurvak\TH47.rvt

KEY NOTES:

1. MAINTAIN MINIMUM 10' CLEARANCE BETWEEN OUTSIDE AIR INTAKE AND ALL EXHAUST AIR DISCHARGES AND VENT PIPING THROUGH ROOF (VTRs).

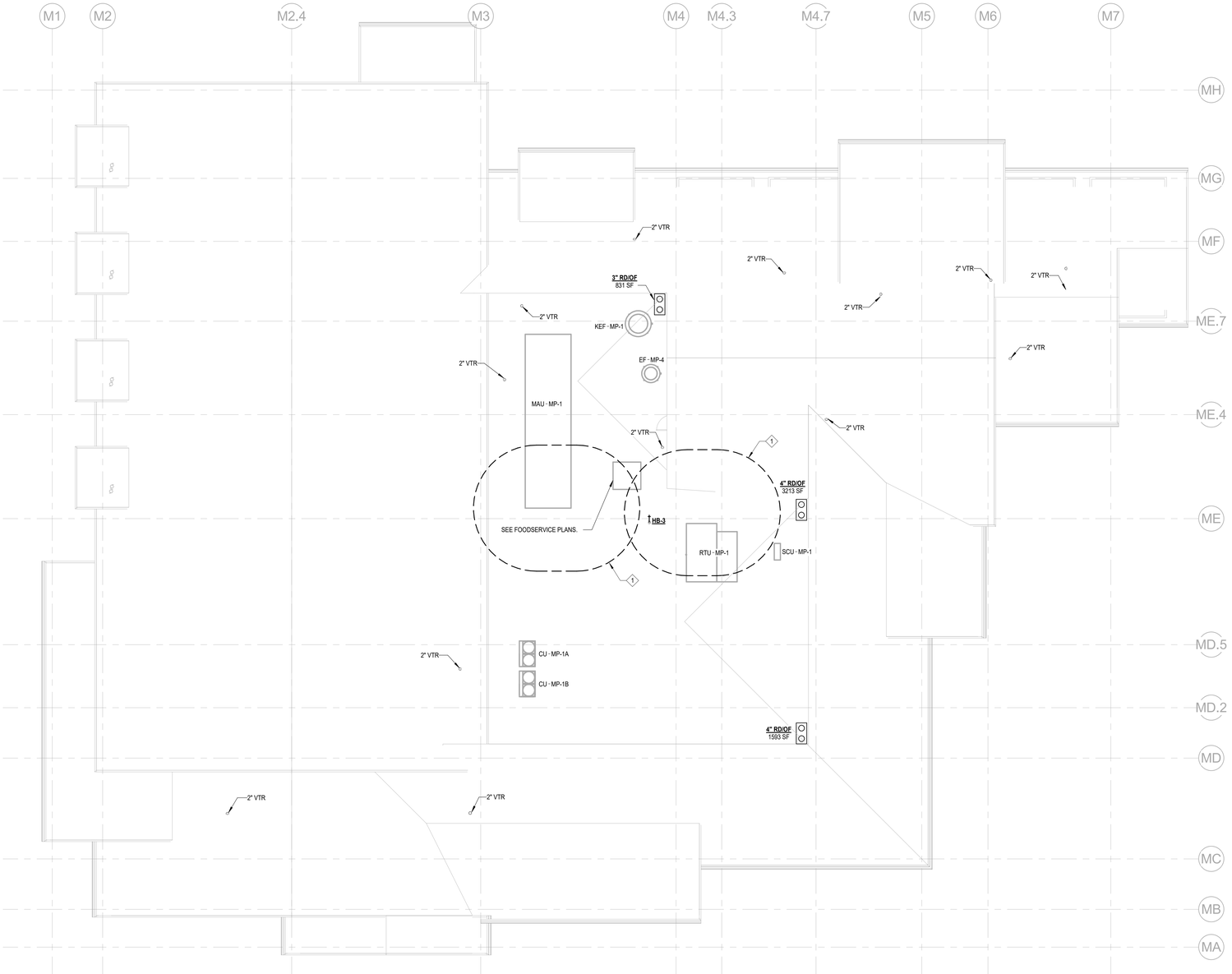

1 P202M MULTI-PURPOSE BLDG PLUMBING ROOF PLAN

SCALE: 1/8" = 1'-0"

Plot Date: 3/16/2021 1:26:17 PM
File Name: L:\Revit Local Files\DECI_DGS CCC Willits_MP_MP18_Central_jdovak\KTH47.rvt

IDENTIFICATION STAMP
DIV. OF THE STATE ARCHITECT
APP: 02-118630 INC:
REVIEWED FOR
SS ☐ FLS ☐ ACS ☑
DATE: 04/13/2021

OFFICE OF THE STATE FIRE MARSHAL
APPROVED FIRE AND PANIC ONLY
Approval of this plan does not authorize or approve any omission or deviation from applicable regulations. Final approval is subject to field inspection. One set of approved plans shall be available on the project site at all times.
PERMIT NO. 20-N-2332-CP
REVIEWED BY: LEO CATAYLO, OSFM
DATE: 4 / /2021

DGS GENERAL SERVICES
Department of General Services
State of California
Real Estate Services Division
Project Management & Development Branch
707 Third Street, Suite 4-105
West Sacramento, California 95605

NICHOLS MELBURG & ROSSETTO
ARCHITECTS + ENGINEERS
300 Knollcrest Drive
Redding, CA. 96002
(530) 222-3300 (530) 222-3538 FAX
http://www.nmrdesign.com

Copyright © 2019
All ideas, designs, arrangements and plans indicated or represented by this drawing are owned by, and the property of, NICHOLS, MELBURG and ROSSETTO and were created, evolved and developed for use on, and in conjunction with, the specified project. None of such ideas, designs, arrangements or plans shall be used by, or disclosed to any person, firm or corporation for any purpose whatsoever without the written permission of NICHOLS, MELBURG and ROSSETTO.

LICENSE STAMPS

REGISTERED PROFESSIONAL ENGINEER
M 33498
EXPIRES 9/30/22
MECHANICAL
STATE OF CALIFORNIA
DATE SIGNED: 10-20-20

CONSULTANT

CAPITAL
ENGINEERING CONSULTANTS, INC.
RANCHO CORDOVA, CALIFORNIA
JD - HC/JH — PM - DESIGN TEAM
181205.00 — PROJECT NO.

DRAWING STATUS
CONSTRUCTION DOCUMENTS

ISSUE

No.	Date	Description
1	10/22/2020	INITIAL PLAN REVIEW
2	01/22/2021	AGENCY RESUBMITTAL
3	03/22/2021	AGENCY RESUBMITTAL

If drawing is not 30" x 42" it is a reduced print

PROJECT
RESIDENTIAL CENTER, UKIAH: REPLACEMENT OF EXISTING RESIDENTIAL CENTER
440 EAST HILL ROAD
WILLITS, CALIFORNIA 95490
MENDOCINO COUNTY
CALIFORNIA CONSERVATION CORP

Supervisor	Designed	Drawn
		Author

DSA Application No.
02-118630

SHEET TITLE
MULTI-PURPOSE BLDG PLUMBING ROOF PLAN

DGS Project Number: 0000000000001826
NMR Project Number: 18-6456

Reference North
Sheet Scale: 1/8" = 1'-0"
Sheet Number: P202M

ISSUE DATE
July 9, 2021

PLUMBING FIXTURE CALCULATION

MULTIPPURPOSE BUILDING

PLUMBING FIXTURE CALCULATION WORKSHEET FOR SIZING WATER AND WASTE MAINS
FROM 2016 CALIFORNIA PLUMBING CODE, APPENDIX A (DOMESTIC WATER), CHAPTER 7 (WASTE).

FIXTURE NO.	TYPE	COLD WATER FU	COLD WATER TOTAL	HOT WATER TOTAL @ 75%	WASTE FU	WASTE TOTAL
8	WC (F.V.) (PUB)	5	40	-	4	32
3	UR (F.V.)	4	12	-	2	6
8	LAV (PUB)	1	8	6	2	16
6	LAV/HS (PRI)	1	6	4.5	1	6
3	KIT. SINK (1 COMP.)	4	12	9	3	9
1	KIT. SINK (2 COMP.)	4	4	3	3	3
1	KIT. SINK (3 COMP.)	4	4	3	3	3
1	COMM. DISHWASH	4	4	3	3	3
2	40 GAL TILT SKILLET/KETTLE	4	8	6	3	6
1	HR/VACUUM BREAKER	2	2	1.5	0	0
2	SINK	1	2	1.5	2	4
2	SS	3	6	4.5	3	6
6	SHOWER	2	12	9	2	12
2	IM	1	2	-	0.5	1
3	WATER (CW ONLY)	1	3	-	0	0
2	WATER (CW & HW)	1	2	1.5	0	0
1	DF/EWC	0.5	0.5	-	1	1
12	FD (2")	0	0	-	0	0
3	TD (4")	0	0	-	4	12
16	FS (2")	0	0	-	2	32
1	HB (1ST ONLY)	2.5	2.5	-	0	0
6	HB (EA ADD.)	1	6	-	0	0
	TOTAL UNITS		136	52.5		152

SYSTEM IS SIZED USING FLUSH VALVES:

TOTAL CW SIZE TO SERVICE (136 FU)	75	GPM
PRESSURE AT BUILDING P.O.C.	60	PSI
HIGHEST FIXTURE	18	FT
PRESSURE LOSS FROM HEIGHT	8	PSI
PRESSURE LOSS FROM METER	5	PSI
PRESSURE LOSS FROM OTHER DEVICES	15	PSI
TOTAL PRESSURE LOSS	28	PSI
REQUIRED AT CRITICAL FIXTURE	25	PSI
PRESSURE AVAILABLE FOR FRICTION LOSS	7	PSI
TOTAL DEVELOPED LENGTH	300	FT
AVAILABLE DROP PER 100 FT	2.33	PSI
DROP PER 100 FT USED FOR PIPE SIZING	1.299	PSI
PIPE SIZE	3	IN
SEWER SIZE (152 FU)	4	IN

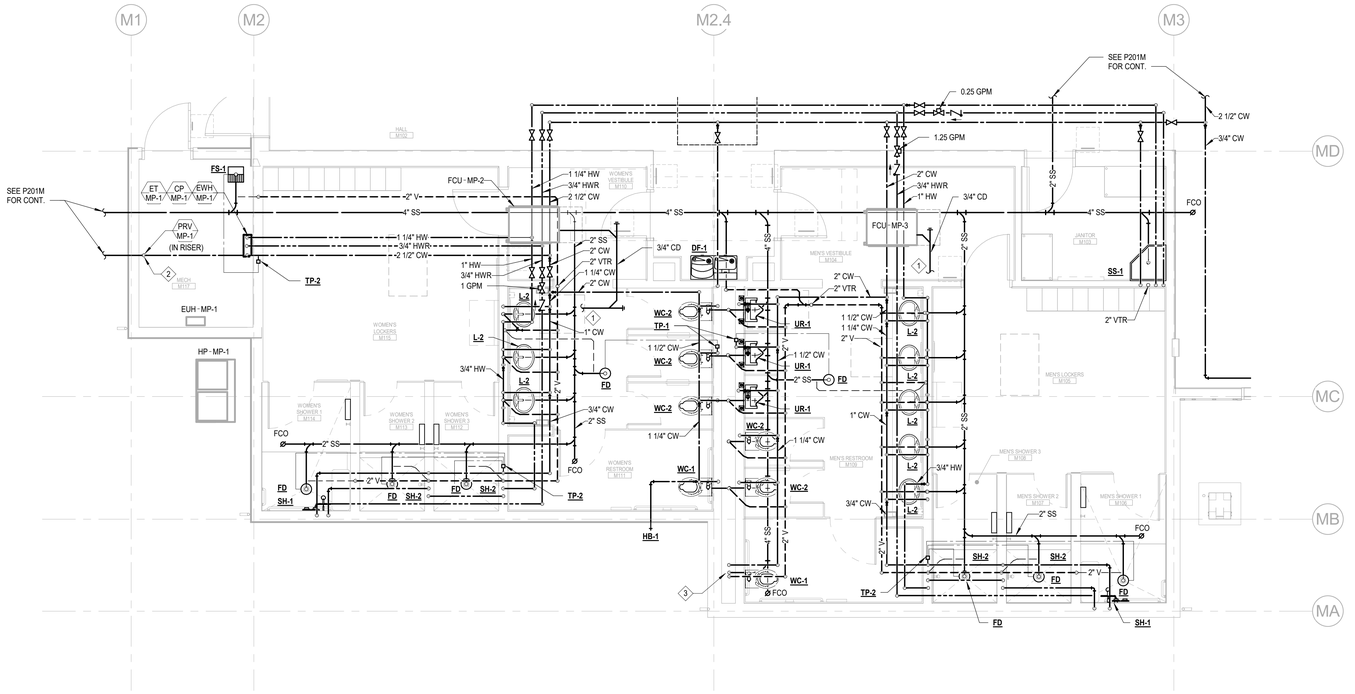

1 P401M ENLARGED RESTROOM PLUMBING PLAN

SCALE: 1/4" = 1'-0"

PROPANE TANK CALCULATION

MULTIPPURPOSE BUILDING

ALL PROPANE PIPING SHALL COMPLY WITH 2019 CALIFORNIA PLUMBING CODE

GAS EQUIPMENT	QTY	MBH
OPEN BURNER RANGE	1	270
GRIDDLE/OVEN	1	126
BROILER	1	90
TOTAL MBH		**486**

(486,000 BTU/HR) / (2,488 BTU/FT³-GAS PROPANE) = 195 FT³ PROPANE/HR

(195 FT³ PROPANE/HR) / (36.38 FT³/GAL-PROPANE) = 5.37 GAL-PROPANE/HR

(1000 GALLON PROPANE TANK) / (5.37 GAL/HR) = 186 HOURS CONTINUOUS USE

APPROXIMATE 50% USAGE. 186 HRS / 0.5 = 372 HRS

4 HOURS/DAY PEAK USE

93 DAYS BETWEEN RE-FILL.*

* ACTUAL DAYS BETWEEN REFILL WILL VARY BASED ON ACTUAL USAGE.

PROPANE TANK CALCULATION

GENERATOR

ALL PROPANE PIPING SHALL COMPLY WITH 2019 CALIFORNIA PLUMBING CODE

GAS EQUIPMENT	QTY	MBH
ELECTRICAL GENERATOR	1	1364
TOTAL MBH		**1364**

(1,364,000 BTU/HR) / (2,488 BTU/FT³-GAS PROPANE) = 548 FT³ PROPANE/HR

(548 FT³ PROPANE/HR) / (36.38 FT³/GAL-PROPANE) = 15.07 GAL-PROPANE/HR

(2000 GALLON PROPANE TANK) / (15.07 GAL/HR) = 132 HOURS CONTINUOUS USE

5.5 DAYS CONTINUOUS USE*

* ACTUAL DAYS BETWEEN REFILL WILL VARY BASED ON ACTUAL USAGE.

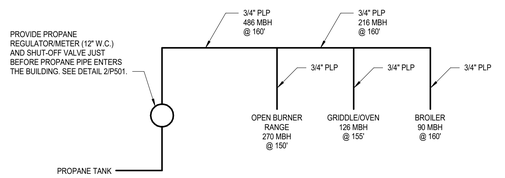

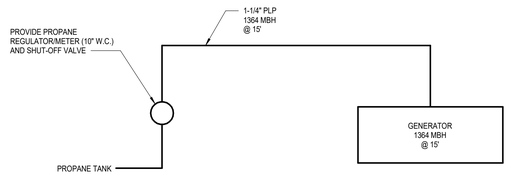

2 P401M PROPANE RISER DIAGRAMS

SCALE: NONE

IDENTIFICATION STAMP
DIV. OF THE STATE ARCHITECT
APP: 02-118630 INC:
REVIEWED FOR
SS ☐ FLS ☐ ACS ☑
DATE: 04/13/2021

OFFICE OF THE STATE FIRE MARSHAL
APPROVED FIRE AND PANIC ONLY
Approval of this plan does not authorize or approve any omission or deviation from applicable regulations. Final approval is subject to field inspection. One set of approved plans shall be available on the project site at all times.
PERMIT NO. 20-N-2332-CP
REVIEWED BY: LEO CATAYLO, OSFM
DATE: 4 / /2021

DGS GENERAL SERVICES
Department of General Services
State of California
Real Estate Services Division
Project Management & Development Branch
707 Third Street, Suite 4-105
West Sacramento, California 95605

NICHOLS MELBURG & ROSSETTO ARCHITECTS + ENGINEERS
300 Knollcrest Drive
Redding, CA. 96002
(530) 222-3300 (530) 222-3538 FAX
http://www.nmrdesign.com

Copyright © 2019
All ideas, designs, arrangements and plans indicated or represented by this drawing are owned by, and the property of, NICHOLS, MELBURG and ROSSETTO and were created, evolved and developed for use on, and in conjunction with, the specified project. None of such ideas, designs, arrangements or plans shall be used by, or disclosed to any person, firm or corporation for any purpose whatsoever without the written permission of NICHOLS, MELBURG and ROSSETTO

LICENSE STAMPS

REGISTERED PROFESSIONAL ENGINEER KEVIN S. BUTT M 33498 EXPIRES 9/30/22 MECHANICAL STATE OF CALIFORNIA
DATE SIGNED: 10-20-20

CONSULTANT

CAPITAL ENGINEERING CONSULTANTS, INC.
RANCHO CORDOVA, CALIFORNIA
JD - HC/JH PM - DESIGN TEAM
181205.00 PROJECT NO.

DRAWING STATUS
CONSTRUCTION DOCUMENTS

ISSUE

No.	Date	Description
1	10/22/2020	INITIAL PLAN REVIEW
2	01/22/2021	AGENCY RESUBMITTAL
3	03/22/2021	AGENCY RESUBMITTAL

If drawing is not 30" x 42" it is a reduced print

PROJECT
RESIDENTIAL CENTER, UKIAH: REPLACEMENT OF EXISTING RESIDENTIAL CENTER
440 EAST HILL ROAD
WILLITS, CALIFORNIA 95490
MENDOCINO COUNTY
CALIFORNIA CONSERVATION CORP

Supervisor	Designed	Drawn
		Author

DSA Application No.
02-118630

SHEET TITLE
MULTI-PURPOSE BLDG PLUMBING ENLARGED FLOOR PLAN & CALCULATION

DGS Project Number: 000000000001826
NMR Project Number: 18-6456

Reference North: TRUE NORTH
Sheet Scale: As indicated
Sheet Number: P401M

ISSUE DATE
July 9, 2021

Plot Date: 3/15/2021 1:20:21 PM
File Name: L:\Revit Local Files\CECI_DGS CCC Willits_MP_MP18_Central_jdovalK?H47.rvt

SHEET NOTES:

1. KITCHEN EQUIPMENT TAGS SHOWN FOR REFERENCE ONLY. SEE FOOD SERVICE FS-xxx SHEET SERIES FOR MORE INFORMATION.

   (XX) — KITCHEN EQUIPMENT TAG

KEY NOTES:

1. DISCHARGE 3/4" CONDENSATE DRAIN TO FLOOR SINK.
2. PROVIDE VACUUM BREAKER AT WATER CONNECTION TO FOOD SERVICE FIXTURE/EQUIPMENT, FOR ANTI-SIPHON PROTECTION.
3. SPILL OVERFLOW RAINWATER LEADER 12" ABOVE FINISHED GRADE WITH DOWNSPOUT NOZZLE. SEE 3/P501.
4. SEE FS-113 FOR CONDENSATE PIPING REQUIREMENTS (HEAT TAPE) AND ROUTING WITHIN WALK-IN COOLER/FREEZER.
5. AUTOMATIC GAS SHUT-OFF VALVE W/ STRAINER FOR INTEGRATION WITH STREIVOR 'DEMANDAIRE' CONTROLS. SEE FS215 FOR MORE INFORMATION. 120V/15A.

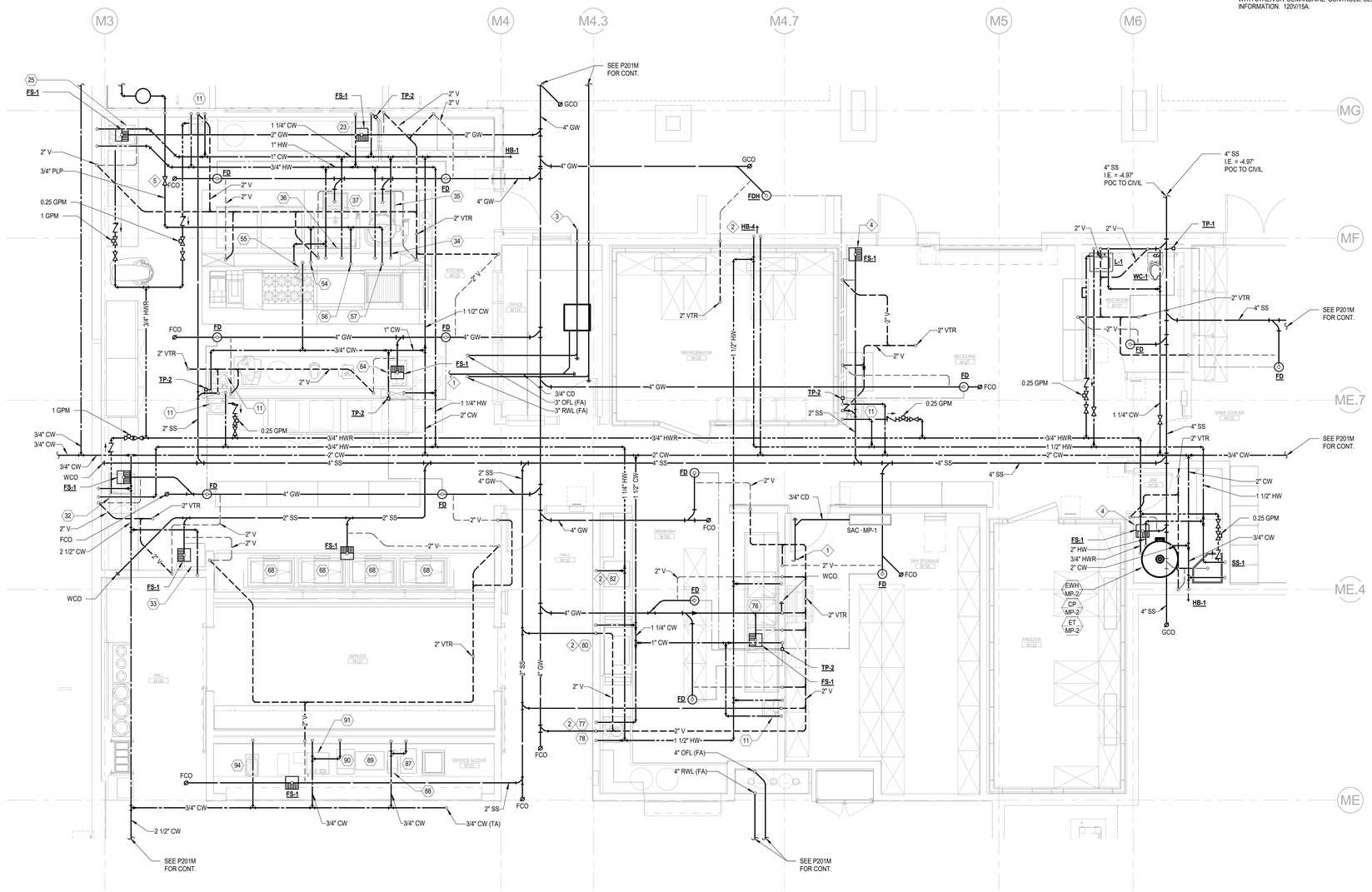

1 P402M ENLARGED KITCHEN PLUMBING PLAN

SCALE: 1/4" = 1'-0"

IDENTIFICATION STAMP
DIV. OF THE STATE ARCHITECT
APP: 02-118630 INC:
REVIEWED FOR
SS ☐ FLS ☐ ACS ☑
DATE: 04/13/2021

OFFICE OF THE STATE FIRE MARSHAL
APPROVED FIRE AND PANIC ONLY
Approval of this plan does not authorize or approve any omission or deviation from applicable regulations. Final approval is subject to field inspection. One set of approved plans shall be available on the project site at all times.
PERMIT NO. 20-N-2332-CP
REVIEWED BY: LEO CATAYLO, OSFM
DATE: 4 / /2021

DGS GENERAL SERVICES
Department of General Services
State of California
Real Estate Services Division
Project Management & Development Branch
707 Third Street, Suite 4-105
West Sacramento, California 95605

NICHOLS MELBURG & ROSSETTO ARCHITECTS + ENGINEERS
300 Knollcrest Drive
Redding, CA. 96002
(530) 222-3300 (530) 222-3538 FAX
http://www.nmrdesign.com

Copyright © 2019
All ideas, designs, arrangements and plans indicated or represented by this drawing are owned by, and the property of, NICHOLS, MELBURG and ROSSETTO and were created, evolved and developed for use on, and in conjunction with, the specified project. None of such ideas, designs, arrangements or plans shall be used by, or disclosed to any person, firm or corporation for any purpose whatsoever without the written permission of NICHOLS, MELBURG and ROSSETTO.

LICENSE STAMPS

REGISTERED PROFESSIONAL ENGINEER — M 33498 — EXPIRES 9/30/22 — MECHANICAL — STATE OF CALIFORNIA
DATE SIGNED: 10-20-20

CONSULTANT

CAPITAL ENGINEERING CONSULTANTS, INC.
RANCHO CORDOVA, CALIFORNIA
JD - HC/JH — PM - DESIGN TEAM
181205.00 — PROJECT NO.

DRAWING STATUS
CONSTRUCTION DOCUMENTS

ISSUE

No.	Date	Description
1	10/22/2020	INITIAL PLAN REVIEW
2	01/22/2021	AGENCY RESUBMITTAL
3	03/22/2021	AGENCY RESUBMITTAL

If drawing is not 30" x 42" it is a reduced print

PROJECT
RESIDENTIAL CENTER, UKIAH: REPLACEMENT OF EXISTING RESIDENTIAL CENTER
440 EAST HILL ROAD
WILLITS, CALIFORNIA 95490
MENDOCINO COUNTY
CALIFORNIA CONSERVATION CORP

Supervisor	Designed	Drawn
		Author

DSA Application No.
02-118630

SHEET TITLE
MULTI-PURPOSE BLDG PLUMBING ENLARGED FLOOR PLAN

DGS Project Number: 000000000001826
NMR Project Number: 18-6456

Reference North
Sheet Scale: 1/4" = 1'-0"
Sheet Number: P402M

ISSUE DATE
July 9, 2021

Plot Date: 3/15/2021 4:06:27 PM
File Name: L:\Revit Local Files\CECI_DGS CCC Willits_MP_MP18\CECI_DGS CCC Willits_MP_MP18_dkrval.rvt

PLUMBING FIXTURE CALCULATION

RECREATION BUILDING

PLUMBING FIXTURE CALCULATION WORKSHEET FOR SIZING WATER AND WASTE MAINS
FROM 2019 CALIFORNIA PLUMBING CODE, APPENDIX A (DOMESTIC WATER), CHAPTER 7 (WASTE).

FIXTURE NO.	TYPE	COLD WATER FU	COLD WATER TOTAL	HOT WATER TOTAL @ 75%	WASTE FU	WASTE TOTAL
7	WC (F.V., PUB)	5	35	-	4	28
2	UR	4	8	-	2	4
1	DF/EWC	0.5	0.5	-	0.5	0.5
1	HB (1ST ONLY)	2.5	2.5	-	0	0
2	HB (EA ADD.)	1	2	-	0	0
6	LAV (PUB)	1	6	4.5	2	12
1	LAV (PRI)	1	1	0.75	1	1
3	SINK	1	3	2.25	2	6
1	SS	3	3	2.25	3	3
8	WASHER	4	32	24	3	24
2	FS (2")	0	0	-	2	4
2	FD (2")	0	0	-	0	0
	TOTAL UNITS		93	33.75		82.5

SYSTEM IS SIZED USING FLUSH VALVES:

TOTAL CW SIZE TO SERVICE (93 FU)	65	GPM
PRESSURE AT BUILDING P.O.C.	60	PSI
HIGHEST FIXTURE	8	FT
PRESSURE LOSS FROM HEIGHT	3.5	PSI
PRESSURE LOSS FROM METER	5	PSI
PRESSURE LOSS FROM OTHER DEVICES	15	PSI
TOTAL PRESSURE LOSS	23.5	PSI
REQUIRED AT CRITICAL FIXTURE	30	PSI
PRESSURE AVAILABLE FOR FRICTION LOSS	6.5	PSI
TOTAL DEVELOPED LENGTH	225	FT
AVAILABLE DROP PER 100 FT	2.89	PSI
DROP PER 100 FT USED FOR PIPE SIZING	1.299	PSI
PIPE SIZE	3	IN
SEWER SIZE (82.5 FU)	4	IN

KEY NOTES:

1. DISCHARGE 3/4" CONDENSATE TO SINK/LAV TAILPIECE.
2. DOMESTIC WATER BUILDING SHUT-OFF VALVE, IN VALVE BOX.
3. BUILDING WATER METER, PROVIDED BY BAS CONTRACTOR. COORDINATE LOCATION AND INSTALLATION WITH DIV 22. SEE 2/M604 AND 1/M600.

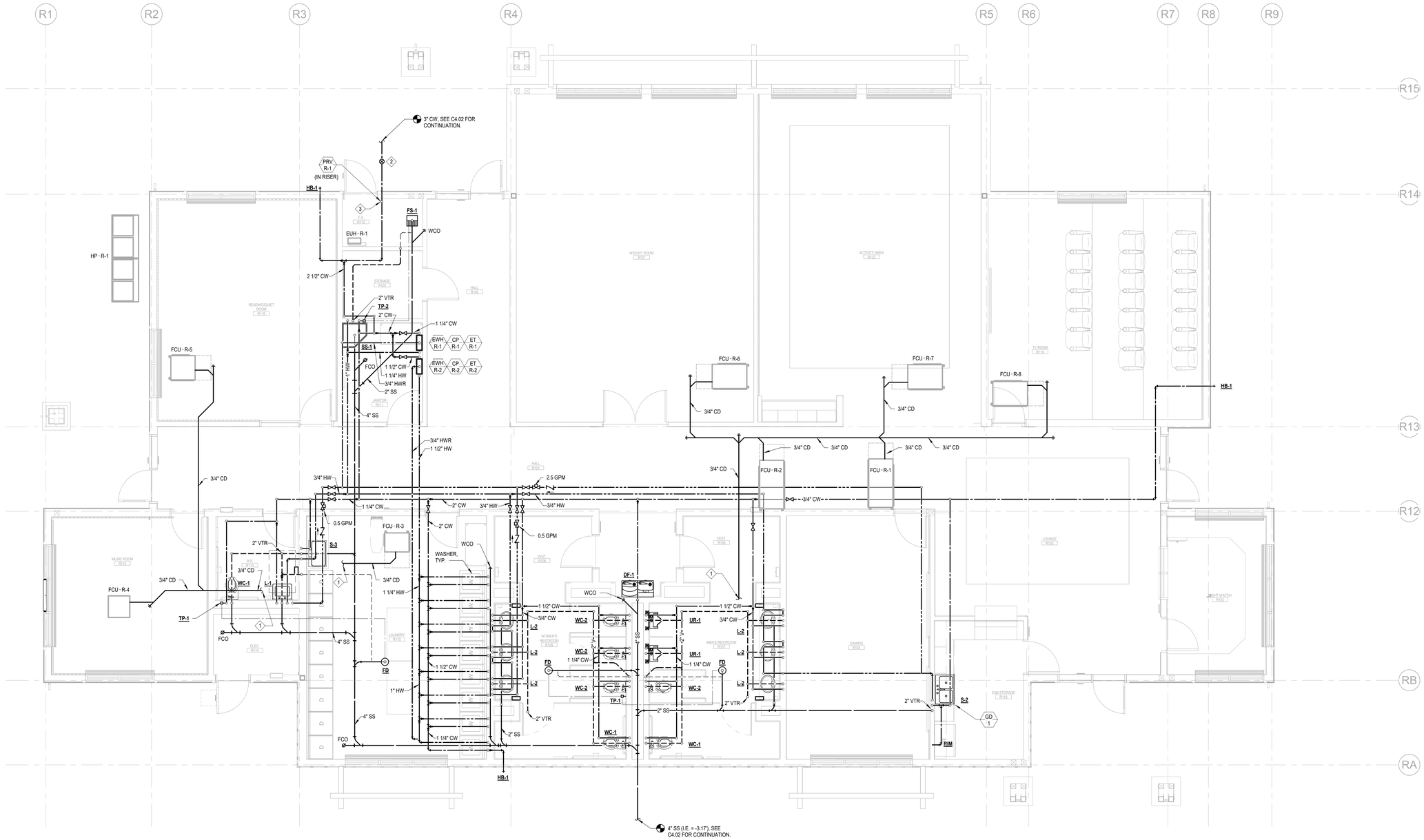

1 P201R RECREATION BLDG PLUMBING FLOOR PLAN

SCALE: 1/4" = 1'-0"

Plot Date: 3/19/2021 1:24:25 PM
File Name: L:\Revit Local Files\#CECI_DGS CCC Willits_Rec_MP18_Central_jdovish\KTH47.rvt

IDENTIFICATION STAMP
DIV. OF THE STATE ARCHITECT
APP: 02-118630 INC:
REVIEWED FOR
SS ☐ FLS ☐ ACS ☑
DATE: 04/13/2021

OFFICE OF THE STATE FIRE MARSHAL
APPROVED FIRE AND PANIC ONLY
Approval of this plan does not authorize or approve any omission or deviation from applicable regulations. Final approval is subject to field inspection. One set of approved plans shall be available on the project site at all times.
PERMIT NO. 20-N-2332-CP
REVIEWED BY: LEO CATAYLO, OSFM
DATE: 4 / /2021

GENERAL SERVICES
Department of General Services
State of California
Real Estate Services Division
Project Management & Development Branch
707 Third Street, Suite 4-105
West Sacramento, California 95605

NICHOLS MELBURG & ROSSETTO
ARCHITECTS + ENGINEERS
300 Knollcrest Drive
Redding, CA. 96002
(530) 222-3300 (530) 222-3538 FAX
http://www.nmrdesign.com

Copyright © 2019
All ideas, designs, arrangements and plans indicated or represented by this drawing are owned by, and the property of, NICHOLS, MELBURG and ROSSETTO and were created, evolved and developed for use on, and in conjunction with, the specified project. None of such ideas, designs, arrangements or plans shall be used by, or disclosed to any person, firm or corporation for any purpose whatsoever without the written permission of NICHOLS, MELBURG and ROSSETTO.

LICENSE STAMPS

REGISTERED PROFESSIONAL ENGINEER — KRISTY T. HOWARD — M 33498 — EXPIRES 9/30/22 — MECHANICAL — STATE OF CALIFORNIA
DATE SIGNED: 10-20-20

CONSULTANT

CAPITAL
ENGINEERING CONSULTANTS, INC.
RANCHO CORDOVA, CALIFORNIA
JD - HCUH — PM - DESIGN TEAM
181205.00 — PROJECT NO.

DRAWING STATUS
CONSTRUCTION DOCUMENTS

ISSUE

No.	Date	Description
1	10/22/2020	INITIAL PLAN REVIEW
2	01/22/2021	AGENCY RESUBMITTAL
3	03/22/2021	AGENCY RESUBMITTAL

If drawing is not 30" x 42" it is a reduced print

PROJECT
RESIDENTIAL CENTER, UKIAH: REPLACEMENT OF EXISTING RESIDENTIAL CENTER
440 EAST HILL ROAD
WILLITS, CALIFORNIA 95490
MENDOCINO COUNTY
CALIFORNIA CONSERVATION CORP

Supervisor	Designed	Drawn
		Author

DSA Application No.
02-118630

SHEET TITLE
RECREATION BLDG PLUMBING FLOOR PLAN

DGS Project Number	NMR Project Number
0000000000001826	18-6456

Reference North: NORTH
Sheet Scale: As indicated
Sheet Number: P201R

ISSUE DATE
July 9, 2021

KEYNOTES:

1. PROVIDE DUCT PLENUM CONNECTION TO LOUVER. SIZED TO MATCH LOUVER DIMENSIONS.
2. MAINTAIN MINIMUM 10' CLEARANCE BETWEEN OUTSIDE AIR INTAKE AND ALL EXHAUST AIR DISCHARGES AND VENT PIPING THROUGH ROOF (VTRs).

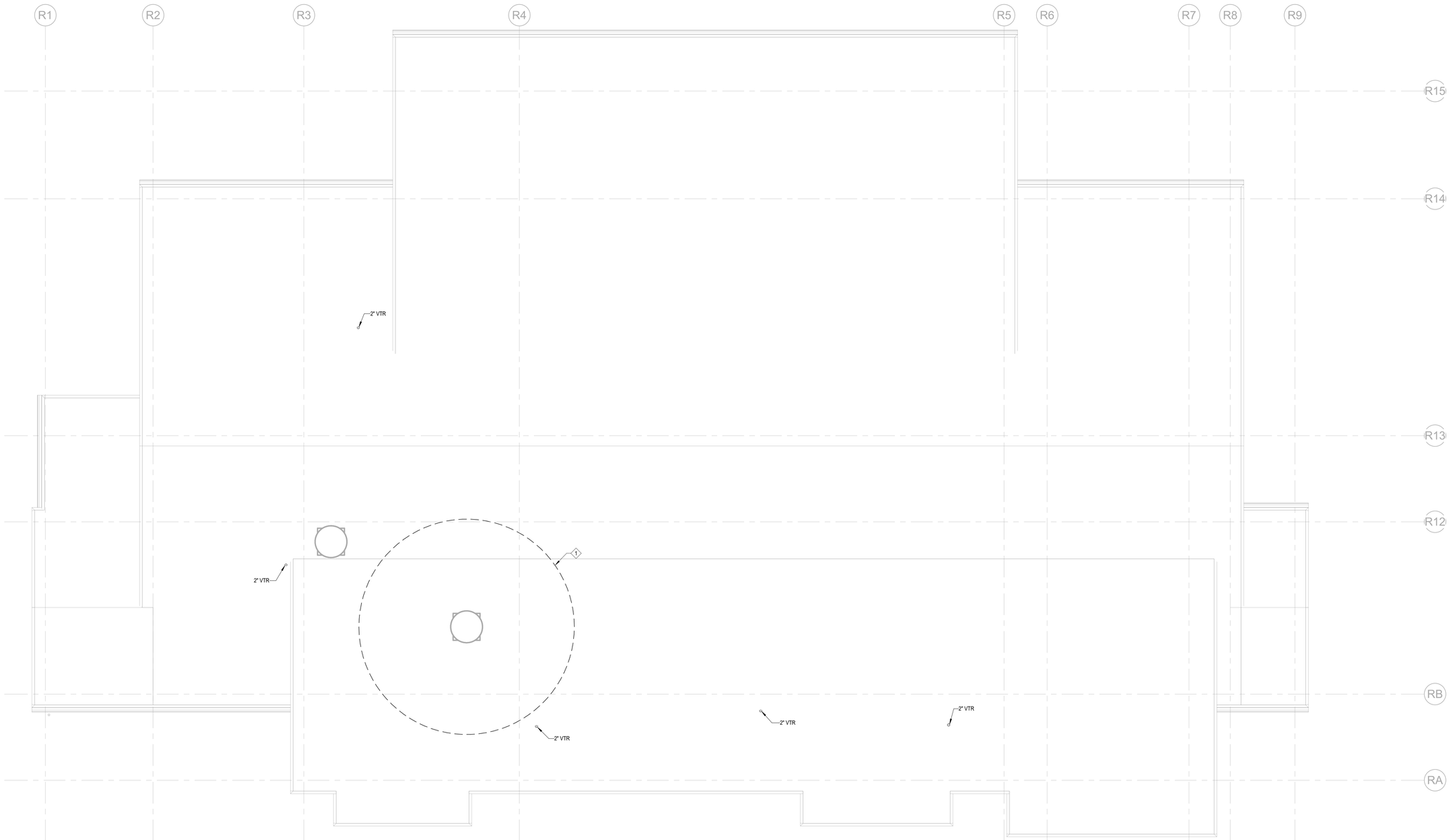

1 P202R RECREAION BLDG PLUMBING ROOF PLAN

SCALE: 1/4" = 1'-0"

Plot Date: 3/18/2021 1:24:26 PM
File Name: L:\Revit Local Files\CECI_DGS CCC Willits_Rec_MP18_Central_jdouwKTH47.rvt

IDENTIFICATION STAMP
DIV. OF THE STATE ARCHITECT
APP: 02-118630 INC:
REVIEWED FOR
SS ☐ FLS ☐ ACS ☑
DATE: 04/13/2021

OFFICE OF THE STATE FIRE MARSHAL
APPROVED FIRE AND PANIC ONLY
Approval of this plan does not authorize or approve any omission or deviation from applicable regulations. Final approval is subject to field inspection. One set of approved plans shall be available on the project site at all times.
PERMIT NO. 20-N-2332-CP
REVIEWED BY: LEO CATAYLO, OSFM
DATE: 4 / /2021

DGS GENERAL SERVICES
Department of General Services
State of California
Real Estate Services Division
Project Management & Development Branch
707 Third Street, Suite 4-105
West Sacramento, California 95605

NICHOLS MELBURG & ROSSETTO
ARCHITECTS + ENGINEERS
300 Knollcrest Drive
Redding, CA. 96002
(530) 222-3300 (530) 222-3538 FAX
http://www.nmrdesign.com

Copyright © 2019
All ideas, designs, arrangements and plans indicated or represented by this drawing are owned by, and the property of, NICHOLS, MELBURG and ROSSETTO and were created, evolved and developed for use on, and in conjunction with, the specified project. None of such ideas, designs, arrangements or plans shall be used by, or disclosed to any person, firm or corporation for any purpose whatsoever without the written permission of NICHOLS, MELBURG and ROSSETTO.

LICENSE STAMPS

REGISTERED PROFESSIONAL ENGINEER
M 33498
EXPIRES 9/30/22
MECHANICAL
STATE OF CALIFORNIA
DATE SIGNED: 10-20-20

CONSULTANT

CAPITAL
ENGINEERING CONSULTANTS, INC.
RANCHO CORDOVA, CALIFORNIA
JD - HC/JH — PM - DESIGN TEAM
181205.00 — PROJECT NO.

DRAWING STATUS
CONSTRUCTION DOCUMENTS

ISSUE

No.	Date	Description
1	10/22/2020	INITIAL PLAN REVIEW
2	01/22/2021	AGENCY RESUBMITTAL
3	03/22/2021	AGENCY RESUBMITTAL

If drawing is not 30" x 42" it is a reduced print

PROJECT
RESIDENTIAL CENTER, UKIAH: REPLACEMENT OF EXISTING RESIDENTIAL CENTER
440 EAST HILL ROAD
WILLITS, CALIFORNIA 95490
MENDOCINO COUNTY
CALIFORNIA CONSERVATION CORP

Supervisor	Designed	Drawn
		Author

DSA Application No.
02-118630

SHEET TITLE
RECREATION BLDG PLUMBING ROOF PLAN

DGS Project Number: 00000000001826
NMR Project Number: 18-6456

Reference North: NORTH
Sheet Scale: 1/4" = 1'-0"
Sheet Number: P202R

ISSUE DATE
July 9, 2021

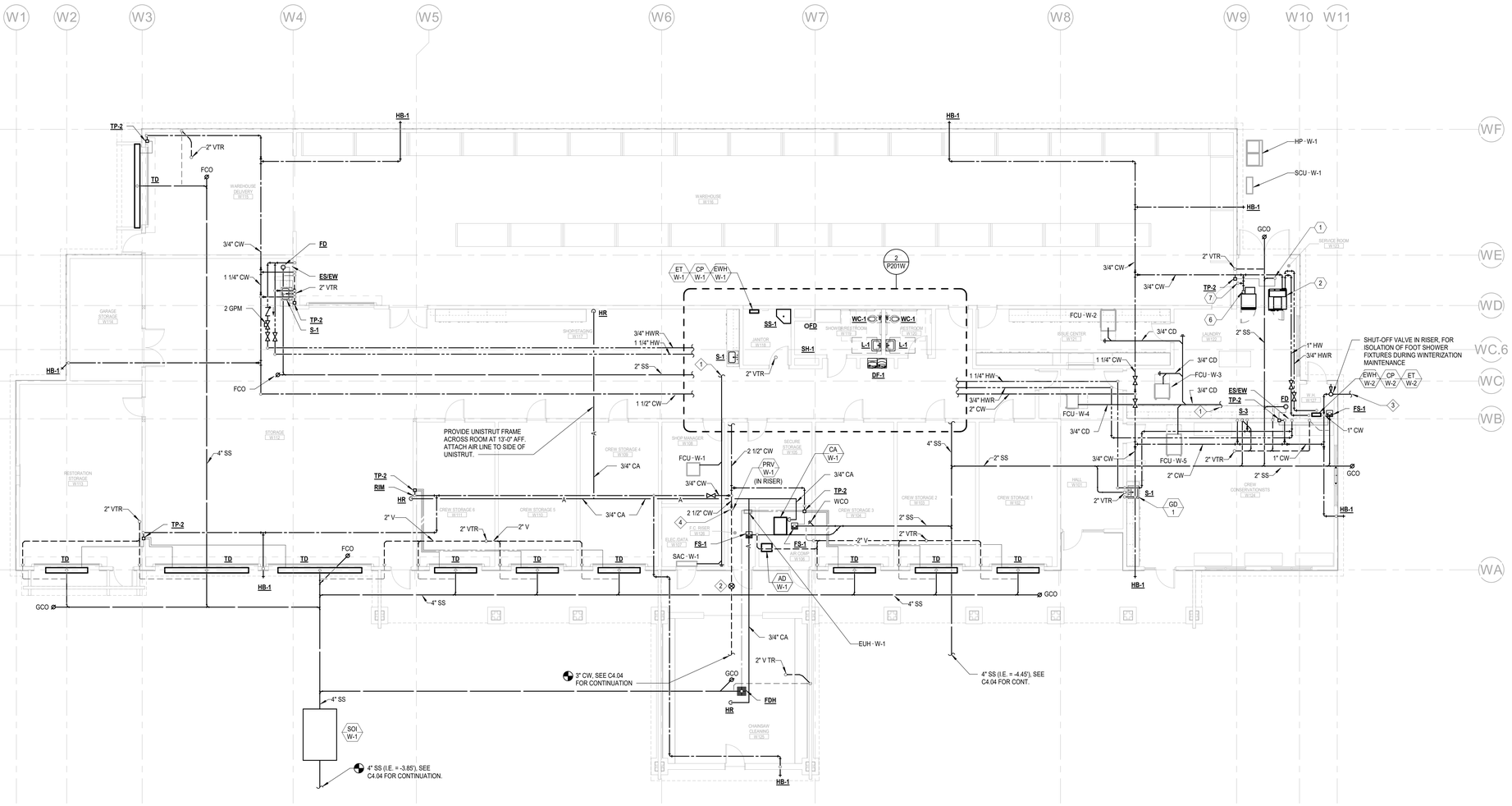

1 P201W WAREHOUSE BLDG PLUMBING FLOOR PLAN

SCALE: 1/8" = 1'-0"

PLUMBING FIXTURE CALCULATION

WAREHOUSE BUILDING

PLUMBING FIXTURE CALCULATION WORKSHEET FOR SIZING WATER AND WASTE MAINS FROM 2019 CALIFORNIA PLUMBING CODE, APPENDIX A (DOMESTIC WATER), CHAPTER 7 (WASTE).

FIXTURE NO.	TYPE	COLD WATER FU	COLD WATER TOTAL	HOT WATER TOTAL @ 75%	WASTE FU	WASTE TOTAL
2	WC (F.V., PRI)	5	10	-	3	6
1	DF/EWC	0.5	0.5	-	0.5	0.5
1	HB (1ST ONLY)	2.5	2.5	-	0	0
6	HB (EA ADD.)	1	6	-	0	0
2	LAV (PRI)	1	2	1.5	1	2
4	SINK	1	4	3	2	8
1	SS	3	3	2.25	3	3
1	SH	2	2	1.5	2	2
2	ES/EW	25	50	37.5	20	40
1	WASHER	4	4	3	3	3
1	RIM	1	1	-	0.5	0.5
2	FS (2")	0	0	-	2	4
11	TD (2")	0	0	-	4	44
	TOTAL UNITS		85	48.75		113

SYSTEM IS SIZED USING FLUSH VALVES:

TOTAL CW SIZE TO SERVICE (85 FU)	63	GPM
PRESSURE AT BUILDING P.O.C.	65	PSI
HIGHEST FIXTURE	15	FT
PRESSURE LOSS FROM HEIGHT	6.5	PSI
PRESSURE LOSS FROM METER	5	PSI
PRESSURE LOSS FROM OTHER DEVICES	15	PSI
TOTAL PRESSURE LOSS	26.5	PSI
REQUIRED AT CRITICAL FIXTURE	30	PSI
PRESSURE AVAILABLE FOR FRICTION LOSS	8.5	PSI
TOTAL DEVELOPED LENGTH	300	FT
AVAILABLE DROP PER 100 FT	2.83	PSI
DROP PER 100 FT USED FOR PIPE SIZING	1.299	PSI
PIPE SIZE	3	IN
SEWER SIZE (113 FU)	4	IN

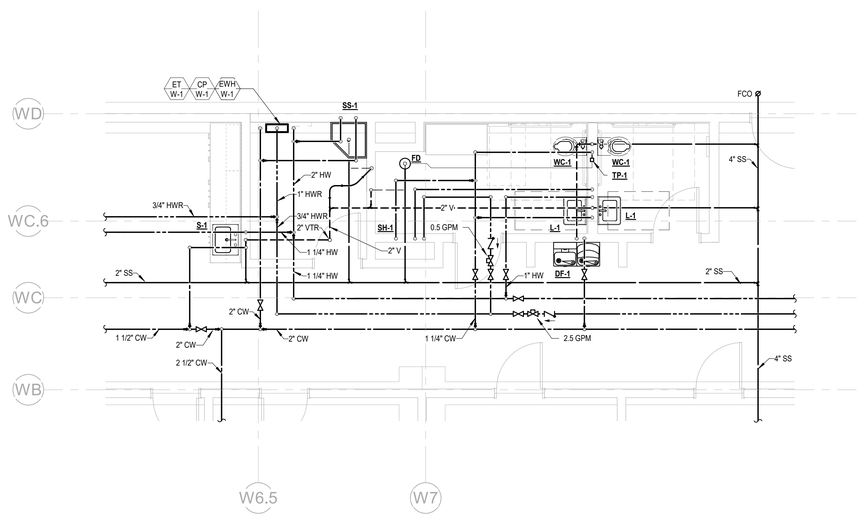

2 P201W PLUMBING ENLARGED PLAN

SCALE: 1/4" = 1'-0"

SHEET NOTES:

1. LAUNDRY EQUIPMENT TAGS SHOWN FOR REFERENCE ONLY. SEE LAUNDRY EQUIPMENT PLAN LS-111 FOR MORE INFORMATION.

(XX) — LAUNDRY EQUIPMENT TAG

KEY NOTES:

1. DISCHARGE 3/4" CONDENSATE TO SINK/LAV TAILPIECE.
2. DOMESTIC WATER BUILDING SHUT-OFF VALVE, IN VALVE BOX.
3. ROUTE 3/4" CW UNDERGROUND TO BOOT WASH AREA. SEE P101 FOR CONT.
4. BUILDING WATER METER, PROVIDED BY BAS CONTRACTOR. COORDINATE LOCATION AND INSTALLATION WITH DIV 22. SEE 2/M604 AND 1/M600.

IDENTIFICATION STAMP
DIV. OF THE STATE ARCHITECT
APP: 02-118630 INC:
REVIEWED FOR
SS ☐ FLS ☐ ACS ☑
DATE: 04/13/2021

OFFICE OF THE STATE FIRE MARSHAL
APPROVED FIRE AND PANIC ONLY
Approval of this plan does not authorize or approve any omission or deviation from applicable regulations. Final approval is subject to field inspection. One set of approved plans shall be available on the project site at all times.
PERMIT NO. 20-N-2332-CP
REVIEWED BY: LEO CATAYLO, OSFM
DATE: 4 / /2021

DGS GENERAL SERVICES
Department of General Services
State of California
Real Estate Services Division
Project Management & Development Branch
707 Third Street, Suite 4-105
West Sacramento, California 95605

NICHOLS MELBURG & ROSSETTO ARCHITECTS + ENGINEERS
300 Knollcrest Drive
Redding, CA. 96002
(530) 222-3300 (530) 222-3538 FAX
http://www.nmrdesign.com

Copyright © 2019
All ideas, designs, arrangements and plans indicated or represented by this drawing are owned by, and the property of, NICHOLS, MELBURG and ROSSETTO and were created, evolved and developed for use on, and in conjunction with, the specified project. None of such ideas, designs, arrangements or plans shall be used by, or disclosed to any person, firm or corporation for any purpose whatsoever without the written permission of NICHOLS, MELBURG and ROSSETTO.

LICENSE STAMPS

REGISTERED PROFESSIONAL ENGINEER — M 33498 — EXPIRES 9/30/22 — MECHANICAL — STATE OF CALIFORNIA
DATE SIGNED: 10-20-20

CONSULTANT

CAPITAL ENGINEERING CONSULTANTS, INC.
RANCHO CORDOVA, CALIFORNIA
JD - HC/JH — PM - DESIGN TEAM
181205.00 — PROJECT NO.

DRAWING STATUS
CONSTRUCTION DOCUMENTS

ISSUE

No.	Date	Description
1	10/22/2020	INITIAL PLAN REVIEW
2	01/22/2021	AGENCY RESUBMITTAL
3	03/22/2021	AGENCY RESUBMITTAL

If drawing is not 30" x 42" it is a reduced print

PROJECT
RESIDENTIAL CENTER, UKIAH: REPLACEMENT OF EXISTING RESIDENTIAL CENTER
440 EAST HILL ROAD
WILLITS, CALIFORNIA 95490
MENDOCINO COUNTY
CALIFORNIA CONSERVATION CORP

Supervisor	Designed	Drawn
		Author

DSA Application No.
02-118630

SHEET TITLE
WAREHOUSE BLDG PLUMBING FLOOR PLAN

DGS Project Number: 0000000000001826
NMR Project Number: 18-6456

Reference North: NORTH
Sheet Scale: As indicated
Sheet Number: P201W

ISSUE DATE
July 9, 2021

Plot Date: 3/19/2021 1:15:15 PM
File Name: L:\Revit Local\ Files\CEC_DGS CCC Willits_Warehouse_MP18_Central_jdluvall\KTH47.rvt

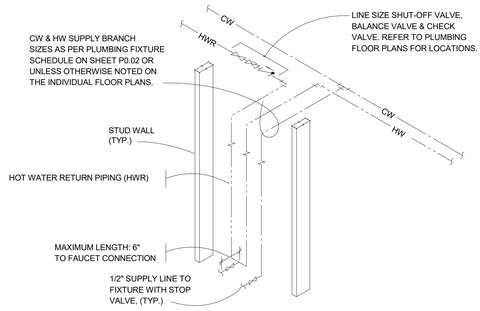

HWR PIPING AT SINGLE FAUCET

11 / P500

SCALE : NONE

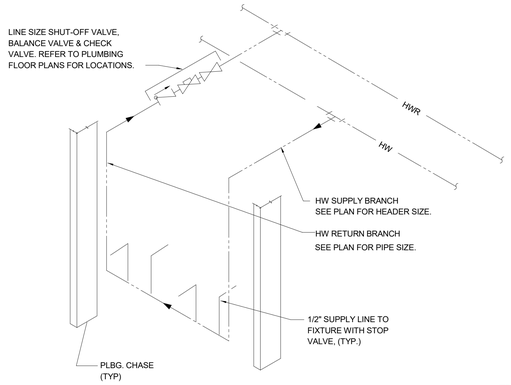

HWR PIPING AT PLUMBING CHASE

8 / P500

SCALE : NONE

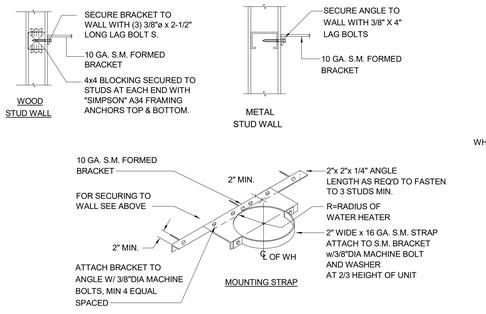

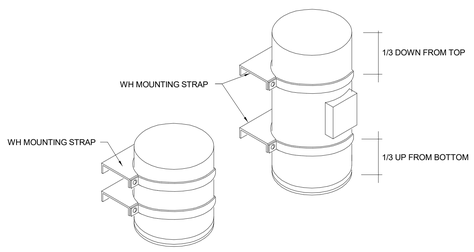

WATER HEATER MOUNTING - TANK

1 / P500

SCALE : NONE

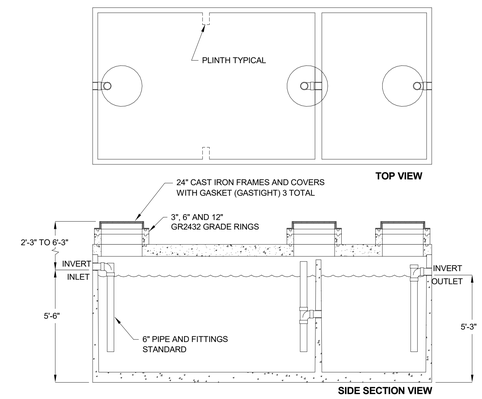

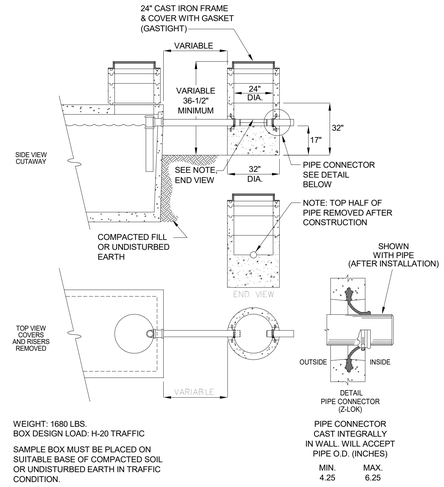

GREASE INTERCEPTOR AND SAMPLE BOX

9 / P500

SCALE : NONE

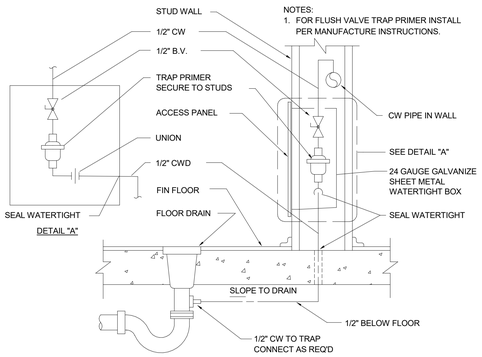

TRAP PRIMER TO FLOOR DRAIN

5 / P500

SCALE : NONE

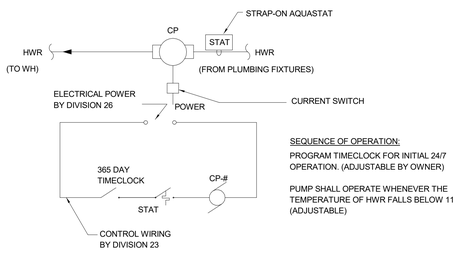

WATER HEATER CONTROL

2 / P500

SCALE : NONE

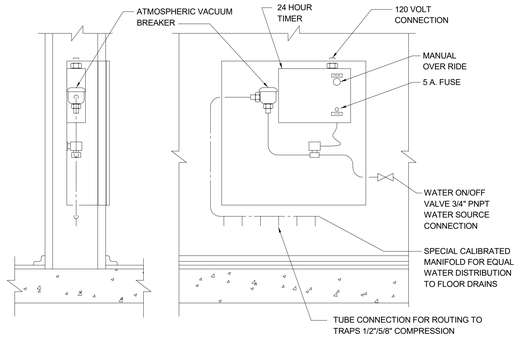

ELECTRONIC TRAP PRIMER ASSEMBLY

6 / P500

SCALE : NONE

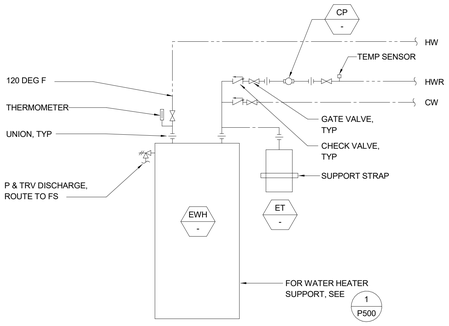

WATER HEATER PIPING

3 / P500

SCALE : NONE

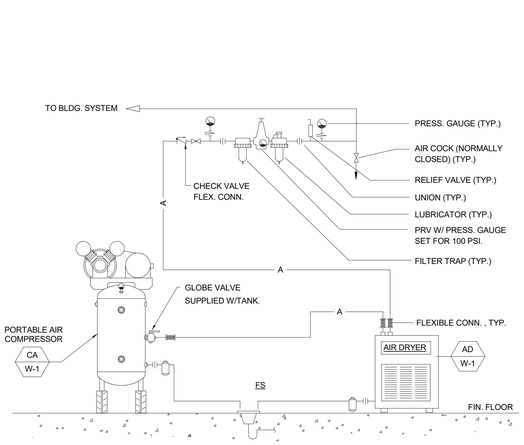

AIR COMPRESSOR PIPING

12 / P500

SCALE : NONE

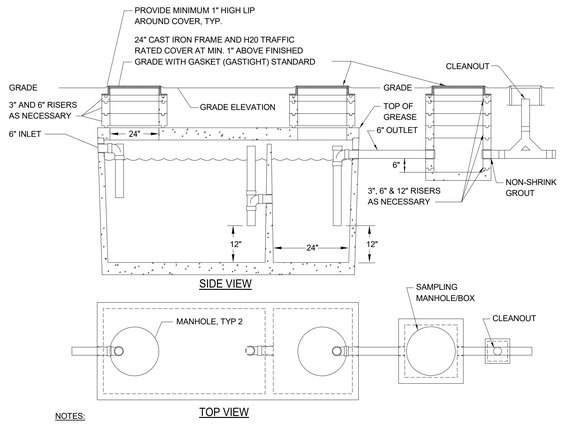

SAND OIL INTERCEPTOR

10 / P500

SCALE : NONE

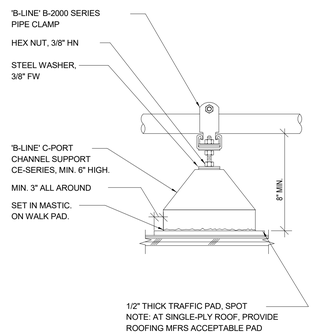

PIPE ON ROOF MOUNTING

7 / P500

SCALE : NONE

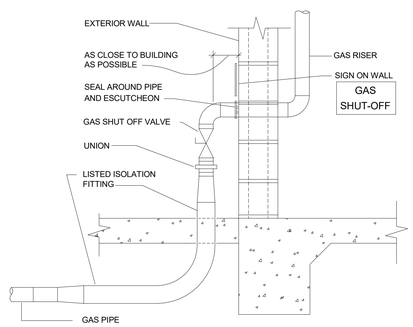

GAS SHUT-OFF VALVE

4 / P500

SCALE : NONE

IDENTIFICATION STAMP
DIV. OF THE STATE ARCHITECT
APP: 02-118630 INC:
REVIEWED FOR
SS ☐ FLS ☐ ACS ☑
DATE: 04/13/2021

OFFICE OF THE STATE FIRE MARSHAL
APPROVED FIRE AND PANIC ONLY
Approval of this plan does not authorize or approve any omission or deviation from applicable regulations. Final approval is subject to field inspection. One set of approved plans shall be available on the project site at all times.
PERMIT NO. 20-N-2332-CP
REVIEWED BY: LEO CATAYLO, OSFM
DATE: 4 / /2021

GENERAL SERVICES
Department of General Services
State of California
Real Estate Services Division
Project Management & Development Branch
707 Third Street, Suite 4-105
West Sacramento, California 95605

NICHOLS MELBURG & ROSSETTO ARCHITECTS + ENGINEERS
300 Knollcrest Drive
Redding, CA. 96002
(530) 222-3300 (530) 222-3538 FAX
http://www.nmrdesign.com

Copyright © 2019
All ideas, designs, arrangements and plans indicated or represented by this drawing are owned by, and the property of, NICHOLS, MELBURG and ROSSETTO and were created, evolved and developed for use on, and in conjunction with, the specified project. None of such ideas, designs, arrangements or plans shall be used by, or disclosed to any person, firm or corporation for any purpose whatsoever without the written permission of NICHOLS, MELBURG and ROSSETTO

LICENSE STAMPS

REGISTERED PROFESSIONAL ENGINEER — KENT D. SMITH — M 33498 — EXPIRES 9/30/22 — MECHANICAL — STATE OF CALIFORNIA
DATE SIGNED: 10-20-20

CONSULTANT

CAPITAL ENGINEERING CONSULTANTS, INC.
RANCHO CORDOVA, CALIFORNIA
JD - HC/JH — PM - DESIGN TEAM
181205.00 — PROJECT NO.

DRAWING STATUS
CONSTRUCTION DOCUMENTS

ISSUE

No.	Date	Description
1	10/22/2020	INITIAL PLAN REVIEW
2	01/22/2021	AGENCY RESUBMITTAL
3	03/22/2021	AGENCY RESUBMITTAL

If drawing is not 30" x 42" it is a reduced print

PROJECT
RESIDENTIAL CENTER, UKIAH: REPLACEMENT OF EXISTING RESIDENTIAL CENTER
440 EAST HILL ROAD
WILLITS, CALIFORNIA 95490
MENDOCINO COUNTY
CALIFORNIA CONSERVATION CORPS

Supervisor	Designed	Drawn
		Author

DSA Application No.
02-118630

SHEET TITLE
PLUMBING DETAILS

DGS Project Number: 0000000000001826
NMR Project Number: 18-6456

Sheet Scale: 12" = 1'-0"
Sheet Number: P500

ISSUE DATE
July 9, 2021

Plot Date: 3/19/2021 1:18:16 PM
File Name: L:\Revit Local Files\CECI_DGS CCC Willits_Schedules_MP18_Central_jduvall(KTH47.rvt

NOTE:
OVERALL SHIPPING DIMENSION: 14'-11" L X 7'-6" W X 7'-2" H

ITEM	SIZE	SUGGESTED FUNCTION
1	2"	MECHANICAL GAUGE
2	4"	PHASE 1 VAPOR RECOVERY
3	1/2"	DRAIN FOR SPILLBOX
4	4"	FILL
5	15 GAL.	15 GAL SPILL BOX,
6	4"	ELECTRONIC LEVEL GAUGE
7	2"	SUCTION PUMP/SPARE
8	6"	PRIMARY TANK EMERGENCY VENT
9	2"	SPARE
10	4"	SUBMERSIBLE PUMP
11	2"	VENT/SPARE
12	2"	SECONDARY WORKING VENT
13	6"	SECONDARY CONTAINMENT EMERGENCY VENT
14	2"	SECONDARY MONITOR PIPE
15	4"	FIRE RATED MATERIAL FILL
16	N/A	9822 DISPENSER BRACKET,
17		ASTRA PUMP REGISTER BRACKET,
18		HIGH HOSE RETRACTOR BRACKET,

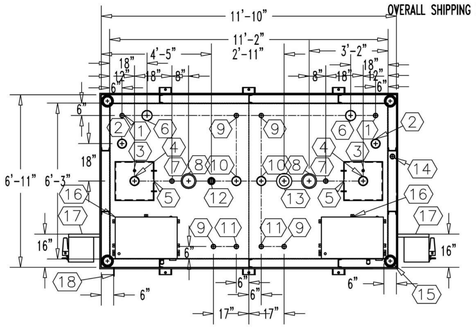

TOP VIEW

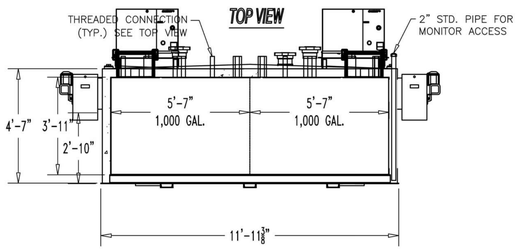

ELEVATION

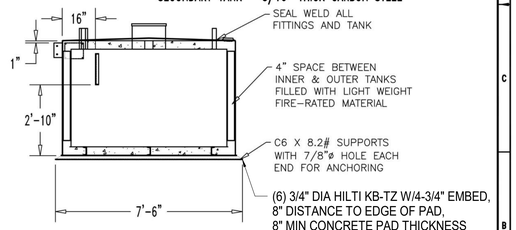

END VIEW

TANK SPECIFICATIONS
VENTING CAPACITY: COMP 1 - 147,000 CUBIC FEET PER HOUR
COMP 2 - 147,000 CUBIC FEET PER HOUR
SECONDARY TANK - 265,000 CUBIC FEET PER HOUR
MATERIAL: PRIMARY TANK - 3/16" THICK CARBON STEEL
SECONDARY TANK - 3/16" THICK CARBON STEEL

PRODUCT CODE	GALLONS	DESCRIPTION	OVERALL SIZE	SHIP WT.
V4AA202MVS527	2000	2 COMP (1000/1000)U/L-2085 ABOVE GROUND VAULT TANK	11'-10" L 6'-11" W X 4'-9" H	12,500 LBS

THIS DRAWING AND DESIGN SHOWN HEREIN IS THE PROPERTY OF CONTAINMENT SOLUTIONS. USE OR COPIES THEREOF CANNOT BE MADE WITHOUT WRITTEN CONSENT.

CUSTOMER NAME

APPROVED BY: _____ DATE: _____

CONTAINMENT SOLUTIONS®

DRAWN BY: D. ROVANG	DATE DRAWN:01-21-05
DWG NUMBER: 5101707A	SCALE:1=50
REV:A | REV BY:DAR | DATE:02-01-05	SHEET:1 OF 1

1 DUAL DISPENSING FUEL TANK
P501
SCALE: NONE

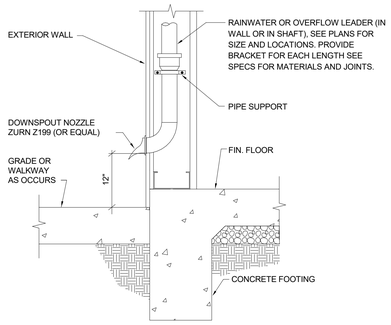

RWL/OFL DOWNSPOUT
3
P501
SCALE : NONE

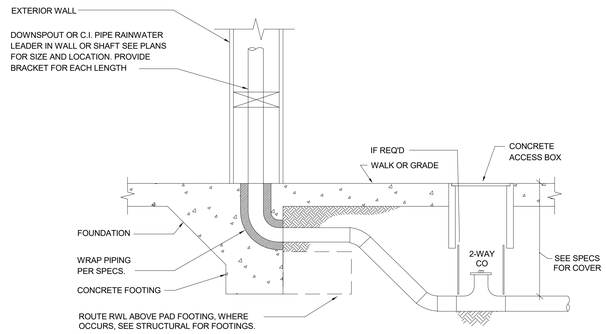

RWL TO SITE MAIN
4
P501
SCALE : NONE

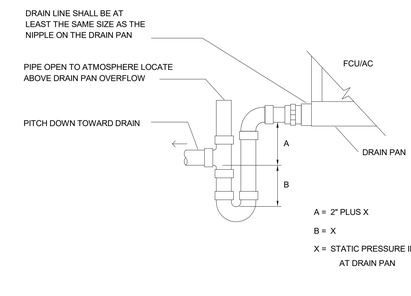

CONDENSATE TRAP ASSEMBLY
5
P501
SCALE : NONE

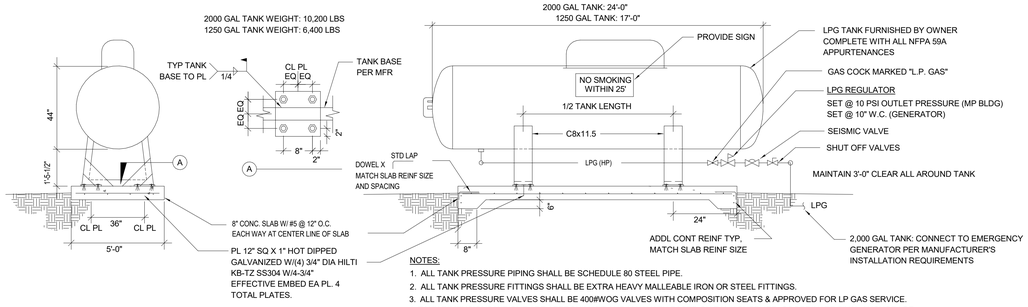

NOTES:
1. ALL TANK PRESSURE PIPING SHALL BE SCHEDULE 80 STEEL PIPE.
2. ALL TANK PRESSURE FITTINGS SHALL BE EXTRA HEAVY MALLEABLE IRON OR STEEL FITTINGS.
3. ALL TANK PRESSURE VALVES SHALL BE 400#WOG VALVES WITH COMPOSITION SEATS & APPROVED FOR LP GAS SERVICE.
4. TANK DIMENSIONS/WEIGHT ARE APPROXIMATE AND MAY VARY BASED ON TANK SUPPLIER. COORDINATE FINAL ANCHORAGE DIMENSIONS WITH STRUCTURAL ENGINEER PRIOR TO INSTALLATION.

LPG TANK DETAIL - TYP FOR BOTH GENERATOR TANK AND MP BLDG TANK
6
P501
SCALE : NONE

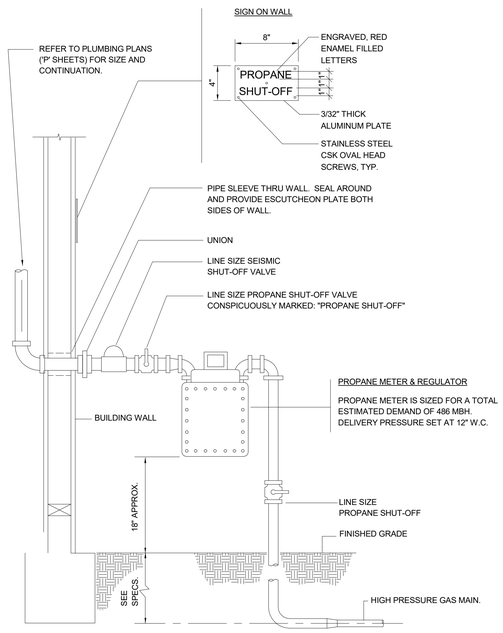

GAS METER DETAIL
2
P501
SCALE : NONE

IDENTIFICATION STAMP
DIV. OF THE STATE ARCHITECT
APP: 02-118630 INC:
REVIEWED FOR
SS ☐ FLS ☐ ACS ☑
DATE: 04/13/2021

OFFICE OF THE STATE FIRE MARSHAL
APPROVED FIRE AND PANIC ONLY
Approval of this plan does not authorize or approve any omission or deviation from applicable regulations. Final approval is subject to field inspection. One set of approved plans shall be available on the project site at all times.
PERMIT NO. 20-N-2332-CP
REVIEWED BY: LEO CATAYLO, OSFM
DATE: 4 / /2021

DGS GENERAL SERVICES
Department of General Services
State of California
Real Estate Services Division
Project Management & Development Branch
707 Third Street, Suite 4-105
West Sacramento, California 95605

NICHOLS MELBURG & ROSSETTO ARCHITECTS + ENGINEERS
300 Knollcrest Drive
Redding, CA. 96002
(530) 222-3300 (530) 222-3538 FAX
http://www.nmrdesign.com

Copyright © 2019
All ideas, designs, arrangements and plans indicated or represented by this drawing are owned by, and the property of, NICHOLS, MELBURG and ROSSETTO and were created, evolved and developed for use on, and in conjunction with, the specified project. None of such ideas, designs, arrangements or plans shall be used by, or disclosed to any person, firm or corporation for any purpose whatsoever without the written permission of NICHOLS, MELBURG and ROSSETTO

LICENSE STAMPS
REGISTERED PROFESSIONAL ENGINEER KEVIN S. DARE M 33498 EXPIRES 9/30/22 MECHANICAL STATE OF CALIFORNIA
DATE SIGNED: 10-20-20

CONSULTANT
CAPITAL ENGINEERING CONSULTANTS, INC.
RANCHO CORDOVA, CALIFORNIA
JD - HC/JH PM - DESIGN TEAM
181205.00 PROJECT NO.

DRAWING STATUS
CONSTRUCTION DOCUMENTS

ISSUE

No.	Date	Description
1	10/22/2020	INITIAL PLAN REVIEW
2	01/22/2021	AGENCY RESUBMITTAL
3	03/22/2021	AGENCY RESUBMITTAL

If drawing is not 30" x 42" it is a reduced print

PROJECT
RESIDENTIAL CENTER, UKIAH: REPLACEMENT OF EXISTING RESIDENTIAL CENTER
440 EAST HILL ROAD
WILLITS, CALIFORNIA 95490
MENDOCINO COUNTY
CALIFORNIA CONSERVATION CORPS

Supervisor	Designed	Drawn
		Author

DSA Application No.
02-118630

SHEET TITLE
PLUMBING DETAILS

DGS Project Number	NMR Project Number
0000000000001826	18-6456

Sheet Scale
12" = 1'-0"
Sheet Number
P501

ISSUE DATE
July 9, 2021

Plot Date: 3/19/2021 1:16:18 PM
File Name: L:\Revit Local Files\CED_DGS CCC Willits_Schedules_MP18_Central_jdcvalKTH47.rvt

DEFERRED SUBMITTAL NOTES

ENTIRE AUTOMATIC SPRINKLER SYSTEM IS A DEFERRED-APPROVAL ITEM.

DEFERRED SUBMITTALS FOR THE PERMIT SHALL BE SUBMITTED BY GENERAL CONTRACTOR FOR FIRE SPRINKLER SYSTEMS INCLUDING ANY MECHANICAL, ELECTRICAL, AND PLUMBING MODIFICATIONS TO ACCOMMODATE THE FIRE SPRINKLER SYSTEMS.

THE GENERAL CONTRACTOR SHALL BE RESPONSIBLE FOR HIRING LICENSED PROFESSIONALS AS REQUIRED TO DESIGN AND CONSTRUCT THE SYSTEMS INCLUDING PROVIDING SERVICES FOR THE PREPARATION OF DRAWINGS NECESSARY TO OBTAIN A REVIEW AND PERMIT APPROVAL FROM THE AUTHORITY HAVING JURISDICTION OVER THE PROJECT.

DEFERRED SUBMITTAL ITEMS SHALL NOT BE INSTALLED UNTIL THE DESIGNATED SUBMITTAL DOCUMENTS HAVE BEEN APPROVED BY THE OFFICE OF THE STATE FIRE MARSHAL AND AUTHORITIES HAVING JURISDICTION.

DEFERRED SUBMITTAL SHALL INCLUDE COMPREHENSIVE ENGINEERING ANALYSIS BY A CALIFORNIA LICENSED FIRE PROTECTION ENGINEER USING PERFORMANCE REQUIREMENTS AND DESIGN CRITERIA INDICATED ON THESE DRAWINGS AND THE CONTENTS OF SECTION 21 10 00 & SECTION 28 31 00 (INCLUDING RELATED AND/OR REFERENCED REQUIREMENTS IDENTIFIED THEREIN). SUBMITTAL SHALL INCLUDE COMPLETE HYDRAULIC CALCULATIONS AND CUTSHEETS FOR MATERIALS AND PRODUCTS USED IN THE SYSTEM.

REFER TO SPECIFICATIONS SECTION 21 10 00 FOR DELEGATED DESIGN REQUIREMENT DETAILS.

ANCHORAGE & BRACING NOTES

1. SHOP DRAWINGS AND ENGINEERING CALCULATION FOR ANCHORAGE, SUPPORT, AND SEISMIC BRACING OF MECHANICAL EQUIPMENT, PIPING AND ETC NOT SHOWN ON DRAWINGS SHALL BE PROVIDED BY THE CONTRACTOR AND SHALL BE SUBMITTED TO THE ARCHITECT/ENGINEER FOR REVIEW PRIOR TO FABRICATION. ALL SUBMITTALS SHALL BE SIGNED BY A CIVIL OR STRUCTURAL ENGINEER REGISTERED IN THE STATE OF CA.
2. ALL FIRE PROTECTION EQUIPMENT SHALL BE ANCHORED OR BRACED TO MEET THE HORIZONTAL AND VERTICAL FORCES PRESCRIBED IN ASCE 7-16 SECTION 13.3 AS DEFINED IN SECTIONS 13.6.8, 13.6.7, 16.6.5.6, AND 2019 CBC SECTIONS 1617A.1.20, 1615A.1.21, AND 1615A.1.22.
3. THE BRACING AND ATTACHMENTS TO STRUCTURE SHALL COMPLY WITH ONE OF THE OSHPD PRE-APPOVALS WITH AN OPA #, SUCH AS "MASON INDUSTRIES" (OPA 349) OR "ISAT" (OPA 485) AS MODIFIED TO SATISFY THE ANCHORAGE REQUIREMENTS OF ACI 318, APPENDIX D. COPIES OF THE MANUAL SHALL BE ON THE JOBSITE PRIOR TO STARTING HANGING AND BRACING OF THE PIPE DISTRIBUTIONS SYSTEMS.
4. THE STRUCTURAL ENGINEER OF RECORD SHALL VERIFY THE ADEQUACY OF THE STRUCTURE TO SUPPORT BRACE LOADS.

FIRE SPRINKLER LEGEND

SYMBOL	ABBREVIATION	DESCRIPTION
AFS	AFS	AUTOMATIC FIRE SPRINKLER PIPING
BFP/WM	BFP/WM	BACKFLOW PREVENTOR/WATER METER
CSP	CSP	COMBINATION WET STAND PIPE AND AUTOMATIC SPRINKLER PIPING
	FDC	FIRE DEPARTMENT CONNECTION
	FH	FIRE HYDRANT
F	F	FIRE SPRINKLER PIPING
D	D	FIRE SPRINKLER PIPING DRAIN
	FSR	FIRE SPRINKLER RISER
OS & Y	OS & Y	OUTSIDE STEM & YOKE VALVE
PIV	PIV	POST INDICATOR VALVE
WSP	WSP	WET STAND PIPE
		UPRIGHT FIRE SPRINKLER HEAD
		PENDANT FIRE SPRINKLER HEAD
		SIDEWALL FIRE SPRINKLER HEAD
	(FA), (TA)	FROM ABOVE, TO ABOVE
	(FB), (TB)	FROM BELOW, TO BELOW

SPRINKLER SYSTEM DESIGN BASIS

BASIS OF DESIGN - SUPPLY PRESSURE

STATIC PRESSURE AVAILABLE IN SITE FIRE LOOP MAIN:	80 PSI (FIELD VERIFY)
RESIDUAL PRESSURE AVAILABLE IN SITE FIRE LOOP MAIN:	72 PSI (FIELD VERIFY)
BFP & SERVICE PRESSURE LOSSES:	7 PSI
NOTE: BFP PRESSURE LOSS DOWNSTREAM OF SITE FIRE LOOP.	
RESIDUAL PRESSURE AVAILABLE AT RISER:	65 PSI
PRESSURE REQUIRED AT REMOTE SPRINKLER HEAD:	20 PSI

NOTE: CONTRACTOR SHALL OBTAIN FIRE WATER FLOW AND PRESSURE TEST DATED WITHIN 6 MONTHS OF PERMIT SUBMITTAL.

DESIGN WATER DEMAND

BASIS OF DESIGN SPRINKLER FLOW BASED ON DENSITY/AREA CURVES OF NFPA 13 - FIGURE 19.3.3.1.1:

ORDINARY HZ, GR-1*, 1500SF @ 0.15 GPM/FT2	= 225 GPM
HOSE STREAM ALLOWANCE**	= 250 GPM
TOTAL DESIGN WATER DEMAND	= 475 GPM

* ORDINARY HAZARD, GROUP 1 IS DRIVING DEMAND FOR FLOW DETERMINATION
** COMBINED HOSE STREAM FOR ORDINARY HAZARD 1

FIRE PROTECTION NOTES

1. THE INSTALLING CONTRACTOR SHALL IDENTIFY A HYDRAULICALLY DESIGNED SPRINKLER SYSTEM WITH A PERMANENTLY MARKED WEATHERPROOF METAL OR RIGID PLASTIC SIGN, SECURE WITH CORROSION-RESISTANT WIRE, CHAIN, OR OTHER APPROVED MEANS. SUCH SIGNS SHALL BE PLACED AT THE ALARM VALVE, DRY PIPE VALVE, PREACTION VALVE OR DELUGE VALVE SUPPLYING THE CORRESPONDING HYDRAULICALLY DESIGNED AREA. THE AREA SHALL INCLUDE THE FOLLOWING INFORMATION:
   A. LOCATION OF THE DESIGN AREA OR AREAS
   B. DISCHARGE DENSITIES OVER THE DESIGN AREA OR AREAS
   C. REQUIRED FLOW AND RESIDUAL PRESSURE DEMAND AT THE BASE OF THE RISER
   D. HOSE STREAM DEMAND INCLUDED IN ADDITION TO THE SPRINKLER DEMAND (2016 EDITION OF NFPA 13, SECTION 28.5 & 28.6)
2. A CABINET WITH A STOCK OF SPARE SPRINKLERS AND SPECIAL SPRINKLER WRENCH SHALL BE PROVIDED. LOCATION OF THE CABINET, NUMBER AND TYPE OF SPRINKLERS SHALL CONFORM TO NFPA 13, 2019 EDITION, SECTION 16.2.7.3.
3. DRAWINGS SHALL BE CONSIDERED DIAGRAMMATIC ONLY. CONTRACTOR SHALL FIELD VERIFY WHERE POSSIBLE EXACT LOCATIONS, SIZES AND ELEVATIONS OF ALL DUCTWORK, PIPING CONNECTIONS, OTHER WORK, ETC., PRIOR TO THE INSTALLATION OF ANY NEW WORK.
4. CONTRACTOR SHALL BE RESPONSIBLE FOR ANY REVISIONS, TRANSITIONS, OFFSETS, ETC., TO AVOID DUCTWORK, PIPING, EQUIPMENT OR STRUCTURE AND TO MAKE A COMPLETE AND FUNCTIONING SYSTEM.
5. INSTALL ALL WORK TO CLEAR ARCHITECTURAL, STRUCTURAL MEMBERS AND MECHANICAL SYSTEMS. ADJUST PIPING AS NECESSARY. NO ITEM SUCH AS PIPE, ETC., SHALL BE IN CONTACT WITH ANY EQUIPMENT. INSTALL ALL PIPING AS HIGH AS POSSIBLE OR AS SPECIFIED ON DRAWINGS TO MAINTAIN MAXIMUM ACCESSIBILITY.
6. THE ENTIRE SYSTEM IS TO BE DESIGNED IN ACCORDANCE WITH THE 2019 CALIFORNIA BUILDING CODE, LOCAL AND STATE FIRE MARSHAL REQUIREMENTS, THE LATEST EDITIONS OF THE NFPA CODES, AND ALL OTHER REGULATIONS THAT MAY APPLY.
7. INSTALLATION OF THE SPRINKLER SYSTEM SHALL NOT BE STARTED UNTIL COMPLETE PLANS AND SPECIFICATIONS, INCLUDING WATER SUPPLY INFORMATION HAVE BEEN APPROVED BY THE STATE FIRE MARSHAL AND ENGINEER OF RECORD. AT VARIOUS STAGES AND UPON COMPLETION, THE SYSTEM MUST BE TESTED IN THE PRESENCE OF THE STATE FIRE MARSHAL AND THE INSPECTOR OF RECORD.
8. ALL AREAS OUTLINED ON PLANS SHALL BE FIRE SPRINKLERED. SEE PLANS FOR LOCATIONS. REFER TO DIVISION 21 SPECIFICATION FOR A COMPLETE DESCRIPTION OF FIRE PROTECTION REQUIREMENTS.
9. THE LOCATIONS OF RISERS, FEED MAINS, CROSS MAINS AND BRANCH PIPING WHERE SHOWN ON THE DRAWINGS IS APPROXIMATE. FINAL LOCATION IS THE CONTRACTOR'S RESPONSIBILITY AND SHALL BE IN COMPLIANCE WITH THE SPECIFICATIONS AND ALL APPLICABLE CODES AND REGULATIONS.
10. ALL PIPING, HEADS, AND SPRINKLER WORK SHALL BE COORDINATED TO THE ARCHITECTURAL, STRUCTURAL, MECHANICAL, AND ELECTRICAL WORK. PIPING SHALL BE CONCEALED, EXCEPT WHERE SO INDICATED OR WHERE ABSOLUTELY NECESSARY TO BE EXPOSED. EXPOSED PIPING SHALL BE PLACED AS APPROVED BY THE STATE FIRE MARSHAL PRIOR TO INSTALLATION.
11. IN GENERAL, HEADS SHALL BE SYMMETRICALLY LOCATED IN CENTER OF CEILING PANELS AND FULLY COORDINATED WITH CEILING OR SOFFIT LIGHT FIXTURES AND AIR CONDITIONING INLETS AND OUTLETS.
12. PROVIDE SPRINKLER HEADS AS REQUIRED ON TOP OF SHAFTS, AT ELEVATORS, UNDER STAIRWAYS, ETC.
13. PROVIDE SEMI-RECESSED HEADS IN OCCUPIED SPACES, PROVIDE PENDANT HEADS AT MECHANICAL SPACES AND EXPOSED SPACES.
14. SLEEVE EACH PIPE THRU CONCRETE SLABS AND SEAL WATERTIGHT. PROVIDE CEILING ESCUTCHEON AS REQUIRED. COORDINATE LOCATION OF ALL PIPE PENETRATIONS THRU CONCRETE SLABS WITH GENERAL CONTRACTOR.
15. FIRE SPRINKLER HYDRAULIC DESIGN DENSITY SHALL BE PER NFPA 13.
16. FOR EXPOSED AREAS PIPING SHALL RUN PARALLEL TO STRUCTURE AND BEAMS, AS HIGH AS POSSIBLE, CONCEAL ADJACENT TO BEAMS AND STRUCTURE WHEREVER POSSIBLE. PIPING SHALL BE EXPOSED, PAINTED. HEADS SHALL BE UPRIGHT AND/OR SIDEWALL, STANDARD BRONZE FINISH.
17. PROTECT PENETRATIONS OF RATED FIRE ASSEMBLIES IN ACCORDANCE WITH THE CBC. REFER TO DETAILS 3/FP001 AND 4/FP001 FOR PENETRATION DETAILS.
18. NO PIPING SHALL BE INSTALLED IN OR OVER ANY ELECTRICAL OR DATA ROOMS OR OVER ELECTRICAL EQUIPMENT OTHER THAN TO SERVE HEADS WITHIN THE ROOM.
19. HILTI IS THE BASIS OF DESIGN FOR DETAILS 3/FP001 AND 4/FP001, ALTERNATE MANUFACTURERS WITH EQUAL PRODUCTS MEETING DIV 7 SPECIFICATION REQUIREMENTS ARE ACCEPTABLE. ALTERNATE MANUFACTURER'S UL DETAILS SHALL BE SUBMITTED AND AVAILABLE AT THE JOBSITE.

CLASSIFIED C UL US
Classified by Underwriters Laboratories, Inc. to UL 1479 and CAN/ULC-S115

System No. W-L-5029

ANSI/UL1479 (ASTM E814)	CAN/ULC S115
F Ratings — 1, 2 and 3 Hr (See Items 1, 3 and 4)	F Ratings — 1, 2 and 3 Hr (See Items 1, 3 and 4)
T Ratings — 0, 1/2, 1 and 1-1/4 Hr (See Item 3)	FT Ratings — 0, 1/2, 1 and 1-1/4 Hr (See Item 3)
L Rating At Ambient — 4 CFM/Sq Ft	FH Ratings — 1, 2 and 3 Hr (See Items 1, 2 and 4)
L Rating At 400 F — Less Than 1 CFM/Sq Ft	FTH Ratings — 0, 1/2, 1 and 1-1/4 Hr (See Item 3)
	L Rating At Ambient — 4 CFM/Sq Ft
	L Rating At 400 F — Less Than 1 CFM/Sq Ft

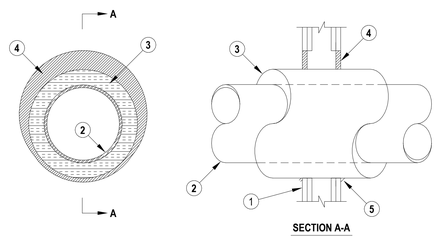

SECTION A-A

1. Wall Assembly — The 1, 2 or 3 hr fire-rated gypsum board/stud wall assembly shall be constructed of the materials and in the manner specified in the individual U300, U400, V400 or W400 Series Wall and Partition Designs in the UL Fire Resistance Directory and shall include the following construction features:
   A. Studs — Wall framing may consist of either wood studs or steel channel studs. Wood studs to consist of nom 2 by 4 in. (51 by 102 mm) lumber spaced 16 in. (406 mm) OC. Steel studs to be min 2-1/2 in. (64 mm) wide for 1 and 2 hr F and FH rating and 3-1/2 in. (89 mm) wide for 3 hr F and FH rating and spaced max 24 in. (610 mm) OC.
   B. Gypsum Board* — Min 5/8 in. (16 mm) thick with square or tapered edges. The gypsum board type, thickness, number of layers, fastener type and sheet orientation shall be as specified in the individual Wall and Partition Design. Max diam of opening is 18-5/8 in. (473 mm).
   The hourly F and FH Ratings of the firestop system are equal to the hourly fire rating of the wall assembly in which it is installed.
2. Through Penetrants — One metallic pipe or tubing to be installed within the firestop system. Pipe or tubing to be rigidly supported on both sides of wall assembly. The following types and sizes of metallic pipes or tubing may be used:
   A. Steel Pipe — Nom 12 in. (305 mm) diam (or smaller) Schedule 10 (or heavier) steel pipe.
   B. Iron Pipe — Nom 12 in. (305 mm) diam (or smaller) cast or ductile iron pipe.
   C. Copper Tubing — Nom 6 in. (152 mm) diam (or smaller) Type L (or heavier) copper tubing. When the hourly F or FH Rating of the firestop system is 3 hr, the nom diam of copper tube shall not exceed 4 in. (102 mm).
   D. Copper Pipe — Nom 6 in. (152 mm) diam (or smaller) Regular (or heavier) copper pipe. When the hourly F or FH Rating of the firestop system is 3 hr, the nom diam of copper pipe shall not exceed 4 in. (102 mm).
3. Pipe Covering* — Nom 1, 1-1/2 or 2 in. (25, 38 or 51 mm) thick hollow cylindrical heavy density (min 3.5 pcf or 56 kg/m3) glass fiber units jacketed on the outside with an all service jacket. Longitudinal joints sealed with metal fasteners or factory-applied self-sealing lap tape. Transverse joints secured with metal fasteners or with butt tape supplied with the product. For 1 and 2 hr F and FH Ratings, the annular space between insulated penetrant and periphery of opening shall be min 0 in. (point contact) to max 1-7/8 in. (48 mm). For 3 hr F and FH Ratings, the annular space shall be min 0 in. (point contact) to max 1-1/4 in. (32 mm).
   See Pipe and Equipment Covering — Materials (BRGU) category in the Building Material Directory for the names of manufacturers. Any pipe covering material meeting the above specifications and bearing the UL Classification Marking with a Flame Spread Index of 25 or less and a Smoke Developed Index of 50 or less may be used.
   The hourly T, FT, FTH Ratings of the firestop system are 1/2 hr for 1 hr rated walls and 1 hr for 2 hr rated walls. For 3 hr rated walls, the hourly T, FT and FTH Ratings when steel and iron pipes are used are 1 hr. For 3 hr rated walls, the hourly T, FT and FTH Ratings when copper penetrants are used are 1-1/4 hr for 2 in. (51 mm) thick pipe covering and 0 hr for pipe covering thickness less than 2 in. (51 mm).

3A. Pipe Covering* — (Not Shown) — As an alternate to Item 3, max 2 in. (51 mm) thick cylindrical calcium silicate (min 14 pcf) units sized to the outside diam of the pipe or tube may be used. Pipe insulation secured with stainless steel bands or min 18 AWG stainless steel wire spaced max 12 in. (305 mm) OC. When the alternate pipe covering is used, the T and FT Rating shall be as specified in item 3 above.
See Pipe and Equipment Covering — Materials (BRGU) category in the Building Materials Directory for names of manufacturers. Any pipe covering material meeting the above specifications and bearing the UL Classification Marking with a Flame Spread Index of 25 or less and a Smoke Developed Index of 50 or less may be used.

4. Fill, Void or Cavity Material* — Sealant — For 1 and 2 hr F and FH Rating, min 5/8 in. (16 mm) thickness of fill material applied within the annulus, flush with both surfaces of wall. For 3 hr F and FH Rating, min 1 in. (25 mm) thickness of fill material applied within the annulus, flush with both surfaces of wall. At the point contact location between pipe covering and gypsum board, a min 1/2 in. (13 mm) diam bead of fill material shall be applied at the pipe covering/gypsum board interface on both surfaces of wall.
   HILTI CONSTRUCTION CHEMICALS, DIV OF HILTI INC — FS-One Sealant

*Bearing the UL Classification Mark

Hilti Firestop Systems

Reproduced by HILTI, Inc. Courtesy of Underwriters Laboratories, Inc. May 30, 2012

4 PIPE PENETRATION DETAIL (STUD)

FP001 SCALE : NONE

CLASSIFIED C UL US
Classified by Underwriters Laboratories, Inc. to UL 1479 and CAN/ULC-S115

System No. C-AJ-5091
F Rating — 2 Hr
T Ratings — 0 and 1 Hr (See Items 2 and 4)
L Rating At Ambient — 4 CFM/Sq Ft
L Rating At 400 F — Less Than 1 CFM/Sq Ft

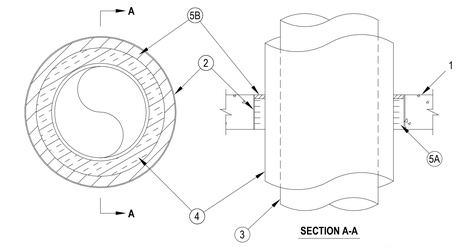

SECTION A-A

1. Floor or Wall Assembly — Min 4-1/2 in. (114 mm) thick reinforced lightweight or normal weight (100-150 pcf or 1600-2400 kg/m3) concrete. Wall may also be constructed of any UL Classified Concrete Blocks*. Max diam of opening is 29 in. (737 mm).
   See Concrete Blocks (CAZT) category in the Fire Resistance directory for names of manufacturers.
2. Metallic Sleeve — (Optional) — Nom 30 in. (762 mm) diam (or smaller) Schedule 10 (or heavier) steel pipe sleeve cast or grouted into floor or wall assembly, flush with floor or wall surfaces or extending a max of 3 in. (76 mm) above floor or beyond both surfaces of wall. If the steel sleeve extends beyond the top surface of the floor or both surfaces of the wall, the T Rating of the firestop system is 0 hr.

2A. Sheet Metal Sleeve — (Optional) - Max 6 in. (152 mm) diam, min 26 ga galv steel provided with a 26 ga galv steel square flange spot welded to the sleeve at approximately mid- height, or flush with bottom of sleeve in floors, and sized to be a min of 2 in. (51 mm) larger than the sleeve diam. The sleeve is to be cast in place flush with bottom surface of floor and may extend a max of 1 in. (25 mm) above the top surface of the floor.

2B. Sheet Metal Sleeve — (Optional) - Max 12 in. (305 mm) diam, min 24 ga galv steel provided with a 24 ga galv steel square flange spot welded to the sleeve at approximately mid- height, or flush with bottom of sleeve in floors, and sized to be a min of 2 in. (51 mm) larger than the sleeve diam. The sleeve is to be cast in place flush with bottom surface of floor and may extend a max of 1 in. (25 mm) above the top surface of the floor.

3. Through Penetrants — One metallic pipe or tubing to be installed either concentrically or eccentrically within the firestop system. Pipe or tubing to be rigidly supported on both sides of floor or wall assembly. The following types and sizes of metallic pipes or tubing may be used:
   A. Steel Pipe — Nom 12 in. (305 mm) diam (or smaller) Schedule 10 (or heavier) steel pipe.
   B. Iron Pipe — Nom 12 in. (305 mm) diam (or smaller) cast or ductile iron pipe.
   C. Copper Pipe — Nom 6 in. (152 mm) diam (or smaller) Regular (or heavier) copper pipe.
   D. Copper Tubing — Nom 6 in. (152 mm) diam (or smaller) Type L (or heavier) copper tubing.
4. Pipe Covering — Min 1/2 in. (13 mm) to max 2 in. (51 mm) thick hollow cylindrical heavy density (min 3.5 pcf or 56 kg/m3) glass fiber units jacketed on the outside with an all-service jacket. Longitudinal joints sealed with metal fasteners or factory-applied, self-sealing lap tape. Transverse joints secured with metal fasteners or with butt tape supplied with the product. The annular space between the insulated pipe and the edge of the periphery of the opening shall be min 1/2 in. (13 mm) to max 12 in. (305 mm). When thickness of pipe covering is less than 2 in. (51 mm), the T Rating for the firestop system is 0 hr.
   See Pipe Equipment Covering — Materials — (BRGU) category in the Building Materials Directory for names of manufacturers. Any pipe covering material meeting the above specifications and bearing the UL Classification Marking with a Flame Spread Index of 25 or less and a Smoke Developed Index of 50 or less may be used.

4A. Pipe Covering — (Not Shown) — As an alternate to Item 4, max 2 in. (51 mm) thick cylindrical calcium silicate (min 14 pcf or 224 kg/m3) units sized to the outside diam of the pipe or tube may be used. Pipe insulation secured with stainless steel bands or min 18 AWG stainless steel wire spaced max 12 in. (305 mm) OC. The annular space shall be min 1/2 in. (13 mm) to max 12 in. (305 mm).

5. Firestop System — The firestop system shall consist of the following:
   A. Packing Material — Min 4 in. (102 mm) thickness of min 4 pcf (64 kg/m3) mineral wool batt insulation firmly packed into opening as a permanent form. Packing material to be recessed from top surface of floor or from both surfaces of wall as required to accommodate the required thickness of fill material.
   B. Fill, Void or Cavity Material* — Sealant — Min 1/2 in. (13 mm) thickness of fill material applied within the annulus, flush with top surface of floor or with both surfaces of wall.
   HILTI CONSTRUCTION CHEMICALS, DIV OF HILTI INC — FS-One Sealant

*Bearing the UL Classification Mark

Hilti Firestop Systems

Reproduced by HILTI, Inc. Courtesy of Underwriters Laboratories, Inc. July 18, 2011

3 PIPE PENETRATION DETAIL (MASONRY)

FP001 SCALE : NONE

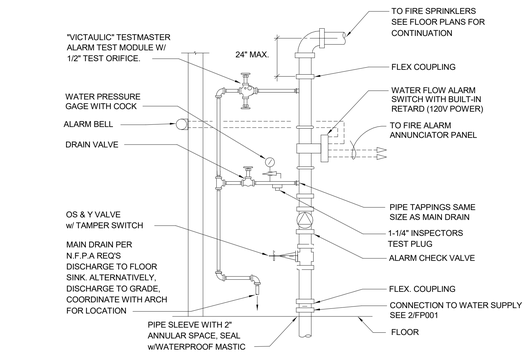

WET PIPE FIRE SPRINKLER RISER

SCALE : NONE — 1 FP001

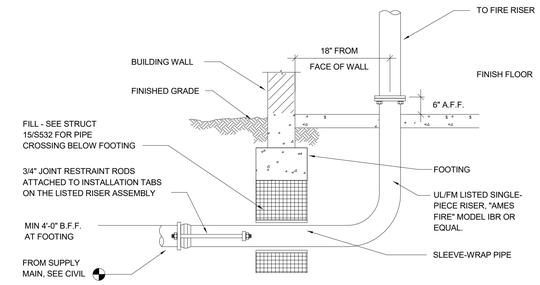

FIRE WATER SERVICE ENTRANCE

SCALE : NONE — 2 FP001

IDENTIFICATION STAMP
DIV. OF THE STATE ARCHITECT
APP: 02-118630 INC:
REVIEWED FOR
SS ☐ FLS ☐ ACS ☑
DATE: 04/13/2021

OFFICE OF THE STATE FIRE MARSHAL
APPROVED FIRE AND PANIC ONLY
Approval of this plan does not authorize or approve any omission or deviation from applicable regulations. Final approval is subject to field inspection. One set of approved plans shall be available on the project site at all times.
PERMIT NO. 20-N-2332-CP
REVIEWED BY: LEO CATAYLO, OSFM
DATE: 4 / /2021

DGS GENERAL SERVICES
Department of General Services
State of California
Real Estate Services Division
Project Management & Development Branch
707 Third Street, Suite 4-105
West Sacramento, California 95605

NICHOLS MELBURG & ROSSETTO ARCHITECTS + ENGINEERS
300 Knollcrest Drive
Redding, CA. 96002
(530) 222-3300 (530) 222-3538 FAX
http://www.nmrdesign.com

Copyright © 2019
All ideas, designs, arrangements and plans indicated or represented by this drawing are owned by, and the property of, NICHOLS, MELBURG and ROSSETTO and were created, evolved and developed for use on, and in conjunction with, the specified project. None of such ideas, designs, arrangements or plans shall be used by, or disclosed to any person, firm or corporation for any purpose whatsoever without the written permission of NICHOLS, MELBURG and ROSSETTO.

LICENSE STAMPS

REGISTERED PROFESSIONAL ENGINEER — M 33498 — EXPIRES 9/30/22 — MECHANICAL — STATE OF CALIFORNIA
DATE SIGNED: 10-20-20

CONSULTANT

CAPITAL ENGINEERING CONSULTANTS, INC.
RANCHO CORDOVA, CALIFORNIA
JD - HCJH — PM - DESIGN TEAM
181205.00 — PROJECT NO.

DRAWING STATUS
CONSTRUCTION DOCUMENTS

ISSUE

No.	Date	Description
1	10/22/2020	INITIAL PLAN REVIEW
2	01/22/2021	AGENCY RESUBMITTAL
3	03/22/2021	AGENCY RESUBMITTAL

If drawing is not 30" x 42" it is a reduced print

PROJECT
RESIDENTIAL CENTER, UKIAH: REPLACEMENT OF EXISTING RESIDENTIAL CENTER
440 EAST HILL ROAD
WILLITS, CALIFORNIA 95490
MENDOCINO COUNTY
CALIFORNIA CONSERVATION CORPS

Supervisor	Designed	Drawn
		Author

DSA Application No.
02-118630

SHEET TITLE
FIRE PROTECTION LEGENDS, NOTES, & DETAILS

DGS Project Number	NMR Project Number
000000000001826	18-6456

Sheet Scale: As indicated
Sheet Number: FP001

ISSUE DATE
July 9, 2021

Plot Date: 3/19/2021 1:31:06 PM
File Name: L:\Revit Local Files\CEC_DGS CCC Willits_Admin_MP18\CEC_DGS CCC Willits_Admin_MP18_jduval.rvt

DEFERRED SUBMITTAL

THE ENTIRE AUTOMATIC FIRE SPRINKLER SYSTEM IS A DEFERRED-APPROVAL ITEM.

DEFERRED SUBMITTALS FOR PERMITS SHALL BE SUBMITTED BY OTHERS INCLUDING SPRINKLER, MECHANICAL, ELECTRICAL, AND PLUMBING. THE GENERAL CONTRACTOR SHALL BE RESPONSIBLE FOR HIRING ***LICENSED PROFESSIONALS AS REQUIRED TO DESIGN AND BUILD THE SYSTEMS*** AS WELL AS PROVIDE SERVICES TO INCLUDE THE PREPARATION OF DRAWINGS AS REQUIRED FOR PERMIT FROM THE AUTHORITY HAVING JURISDICTION OVER THE PROJECT FOR REVIEW & APPROVAL. ***THE DEFERRED SUBMITTAL ITEMS SHALL NOT BE INSTALLED UNTIL THE DESIGN AND SUBMITTAL DOCUMENTS HAVE BEEN APPROVED BY THE OFFICE OF THE STATE FIRE MARSHAL.***

DEFERRED SUBMITTAL SHALL INCLUDE COMPREHENSIVE ENGINEERING ANALYSIS BY A CA LICENSED PROFESSIONAL FIRE PROTECTION ENGINEER, USING PERFORMANCE REQUIREMENTS AND DESIGN CRITERIA INDICATED ON THESE DRAWINGS AND THE CONTENTS OF SECTION 21 10 00. SUBMITTAL SHALL INCLUDE COMPLETE HYDRAULIC CALCULATIONS AND CUTSHEETS FOR MATERIALS AND PRODUCTS USED IN THE SYSTEM.

GENERAL NOTES

THE INSTALLING CONTRACTOR SHALL IDENTIFY A HYDRAULICALLY DESIGNED SPRINKLER SYSTEM WITH A PERMANENTLY MARKED WEATHERPROOF METAL OR RIGID PLASTIC SIGN, SECURE WITH CORROSION-RESISTANT WIRE, CHAIN, OR OTHER APPROVED MEANS. SUCH SIGNS SHALL BE PLACED AT THE ALARM VALVE, DRY PIPE VALVE, PREACTION VALVE, OR DELUGE VALVE SUPPLYING THE CORRESPONDING HYDRAULICALLY DESIGNED AREA.
THE AREA SHALL INCLUDE THE FOLLOWING INFORMATION:
a. LOCATION OF THE DESIGN AREA OR AREAS.
b. DISCHARGE DENSITIES OVER THE DESIGN AREA OR AREAS
c. REQUIRED FLOW AND RESIDUAL PRESSURE DEMAND AT THE BASE OF THE RISER
d. HOSE STREAM DEMAND INCLUDED IN ADDITION TO THE SPRINKLER DEMAND (2016 EDITION OF NFPA 13, SECTION 28.5 & 28.6)

THE AUTOMATIC FIRE SPRINKLER SYSTEM SHALL CONFORM TO THE REQUIREMENTS OF NFPA 13, 2016 ED. INSTALLATION OF THE FIRE SPRINKLER SYSTEM SHALL NOT BE STARTED UNTIL COMPLETE PLANS AND SPECIFICATIONS (INCLUDING WATER SUPPLY INFORMATION AND TYPE OF SYSTEM, IF ANY) HAVE BEEN APPROVED BY THE STATE FIRE MARSHAL. AT VARIOUS STAGES AND UPON COMPLETION, THE SYSTEM SHALL BE TESTED IN THE PRESENCE OF THE STATE FIRE MARSHAL AND THE INSPECTOR OF RECORD.

PROVIDE FIRESTOPPING DESIGN AND DETAILS SHOWING THE REQUIRED CLEARANCES AND FLEXIBLE FIRE-STOP SYSTEM/SEALANT WHERE SPRINKLER PIPING PENETRATES RATED WALLS WHERE OPENINGS ARE REQUIRED TO BE PROTECTED (2019 CBC SECTION 714)

A CABINET WITH A STOCK OF SPARE SPRINKLERS AND SPECIAL SPRINKLER WRENCH SHALL BE PROVIDED. LOCATION OF THE CABINET, NUMBER AND TYPE OF SPRINKLERS SHALL CONFORM TO NFPA 13 2016 ED, SECTION 16.2.7.3.

SCHEMATIC FOR REFERENCE ONLY

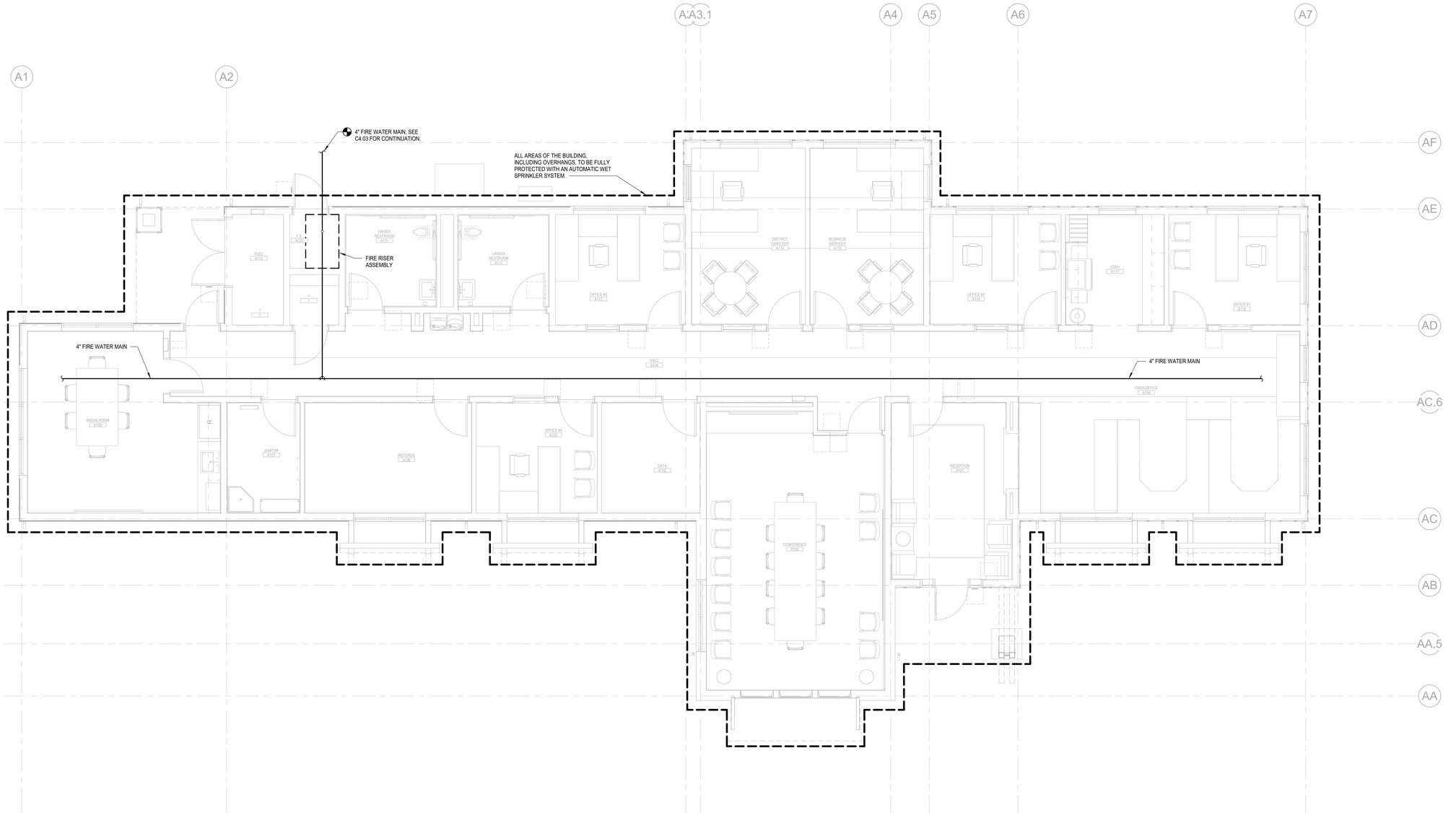

1 FP201A ADMINISTRATION BLDG FIRE PROTECTION FLOOR PLAN

SCALE: 1/4" = 1'-0"

Plot Date: 3/18/2021 1:31:11 PM
File Name: L:\Revit Local Files\CECI_DGS CCC Willits_Admin_MP18\CECI_DGS CCC Willits_Admin_MP18_jdcval.rvt

IDENTIFICATION STAMP
DIV. OF THE STATE ARCHITECT
APP: 02-118630 INC:
REVIEWED FOR
SS ☐ FLS ☐ ACS ☑
DATE: 04/13/2021

OFFICE OF THE STATE FIRE MARSHAL
APPROVED FIRE AND PANIC ONLY
Approval of this plan does not authorize or approve any omission or deviation from applicable regulations. Final approval is subject to field inspection. One set of approved plans shall be available on the project site at all times.
PERMIT NO. 20-N-2332-CP
REVIEWED BY: LEO CATAYLO, OSFM
DATE: 4 / 1 /2021

GENERAL SERVICES
Department of General Services
State of California
Real Estate Services Division
Project Management & Development Branch
707 Third Street, Suite 4-105
West Sacramento, California 95605

NICHOLS MELBURG & ROSSETTO
ARCHITECTS + ENGINEERS
300 Knollcrest Drive
Redding, CA. 96002
(530) 222-3300 (530) 222-3538 FAX
http://www.nmrdesign.com

Copyright © 2019
All ideas, designs, arrangements and plans indicated or represented by this drawing are owned by, and the property of, NICHOLS, MELBURG and ROSSETTO and were created, evolved and developed for use on, and in conjunction with, the specified project. None of such ideas, designs, arrangements or plans shall be used by, or disclosed to any person, firm or corporation for any purpose whatsoever without the written permission of NICHOLS, MELBURG and ROSSETTO.

LICENSE STAMPS

REGISTERED PROFESSIONAL ENGINEER — M 33498 — EXPIRES 9/30/22 — MECHANICAL — STATE OF CALIFORNIA
DATE SIGNED: 10-20-20

CONSULTANT

CAPITAL
ENGINEERING CONSULTANTS, INC.
RANCHO CORDOVA, CALIFORNIA
JD - HC/JH — PM - DESIGN TEAM
181205.00 — PROJECT NO.

DRAWING STATUS
CONSTRUCTION DOCUMENTS

ISSUE

No.	Date	Description
1	10/22/2020	INITIAL PLAN REVIEW
2	01/22/2021	AGENCY RESUBMITTAL
3	03/22/2021	AGENCY RESUBMITTAL

If drawing is not 30" x 42" it is a reduced print

PROJECT
RESIDENTIAL CENTER, UKIAH: REPLACEMENT OF EXISTING RESIDENTIAL CENTER
440 EAST HILL ROAD
WILLITS, CALIFORNIA 95490
MENDOCINO COUNTY
CALIFORNIA CONSERVATION CORPS

Supervisor	Designed	Drawn
		Author

DSA Application No.
02-118630

SHEET TITLE
ADMINISTRATION BLDG FIRE PROTECTION FLOOR PLAN

DGS Project Number: 0000000000001826
NMR Project Number: 18-6456

Reference North: GRID NORTH
Sheet Scale: 1/4" = 1'-0"
Sheet Number: FP201A

ISSUE DATE
July 9, 2021

DEFERRED SUBMITTAL

THE ENTIRE AUTOMATIC FIRE SPRINKLER SYSTEM IS A DEFERRED-APPROVAL ITEM.

DEFERRED SUBMITTALS FOR PERMITS SHALL BE SUBMITTED BY OTHERS INCLUDING SPRINKLER, MECHANICAL, ELECTRICAL, AND PLUMBING. THE GENERAL CONTRACTOR SHALL BE RESPONSIBLE FOR HIRING ***LICENSED PROFESSIONALS AS REQUIRED TO DESIGN AND BUILD THE SYSTEMS*** AS WELL AS PROVIDE SERVICES TO INCLUDE THE PREPARATION OF DRAWINGS AS REQUIRED FOR PERMIT FROM THE AUTHORITY HAVING JURISDICTION OVER THE PROJECT FOR REVIEW & APPROVAL. ***THE DEFERRED SUBMITTAL ITEMS SHALL NOT BE INSTALLED UNTIL THE DESIGN AND SUBMITTAL DOCUMENTS HAVE BEEN APPROVED BY THE OFFICE OF THE STATE FIRE MARSHAL.***

DEFERRED SUBMITTAL SHALL INCLUDE COMPREHENSIVE ENGINEERING ANALYSIS BY A CA LICENSED PROFESSIONAL FIRE PROTECTION ENGINEER, USING PERFORMANCE REQUIREMENTS AND DESIGN CRITERIA INDICATED ON THESE DRAWINGS AND THE CONTENTS OF SECTION 21 10 00. SUBMITTAL SHALL INCLUDE COMPLETE HYDRAULIC CALCULATIONS AND CUTSHEETS FOR MATERIALS AND PRODUCTS USED IN THE SYSTEM.

GENERAL NOTES

THE INSTALLING CONTRACTOR SHALL IDENTIFY A HYDRAULICALLY DESIGNED SPRINKLER SYSTEM WITH A PERMANENTLY MARKED WEATHERPROOF METAL OR RIGID PLASTIC SIGN, SECURE WITH CORROSION-RESISTANT WIRE, CHAIN, OR OTHER APPROVED MEANS. SUCH SIGNS SHALL BE PLACED AT THE ALARM VALVE, DRY PIPE VALVE, PREACTION VALVE, OR DELUGE VALVE SUPPLYING THE CORRESPONDING HYDRAULICALLY DESIGNED AREA.
THE AREA SHALL INCLUDE THE FOLLOWING INFORMATION:
a. LOCATION OF THE DESIGN AREA OR AREAS.
b. DISCHARGE DENSITIES OVER THE DESIGN AREA OR AREAS
c. REQUIRED FLOW AND RESIDUAL PRESSURE DEMAND AT THE BASE OF THE RISER
d. HOSE STREAM DEMAND INCLUDED IN ADDITION TO THE SPRINKLER DEMAND (2016 EDITION OF NFPA 13, SECTION 28.5 & 28.6)

THE AUTOMATIC FIRE SPRINKLER SYSTEM SHALL CONFORM TO THE REQUIREMENTS OF NFPA 13, 2016 ED. INSTALLATION OF THE FIRE SPRINKLER SYSTEM SHALL NOT BE STARTED UNTIL COMPLETE PLANS AND SPECIFICATIONS (INCLUDING WATER SUPPLY INFORMATION AND TYPE OF SYSTEM, IF ANY) HAVE BEEN APPROVED BY THE STATE FIRE MARSHAL. AT VARIOUS STAGES AND UPON COMPLETION, THE SYSTEM SHALL BE TESTED IN THE PRESENCE OF THE STATE FIRE MARSHAL AND THE INSPECTOR OF RECORD.

PROVIDE FIRESTOPPING DESIGN AND DETAILS SHOWING THE REQUIRED CLEARANCES AND FLEXIBLE FIRE-STOP SYSTEM/SEALANT WHERE SPRINKLER PIPING PENETRATES RATED WALLS WHERE OPENINGS ARE REQUIRED TO BE PROTECTED (2019 CBC SECTION 714)

A CABINET WITH A STOCK OF SPARE SPRINKLERS AND SPECIAL SPRINKLER WRENCH SHALL BE PROVIDED. LOCATION OF THE CABINET, NUMBER AND TYPE OF SPRINKLERS SHALL CONFORM TO NFPA 13 2016 ED, SECTION 16.2.7.3.

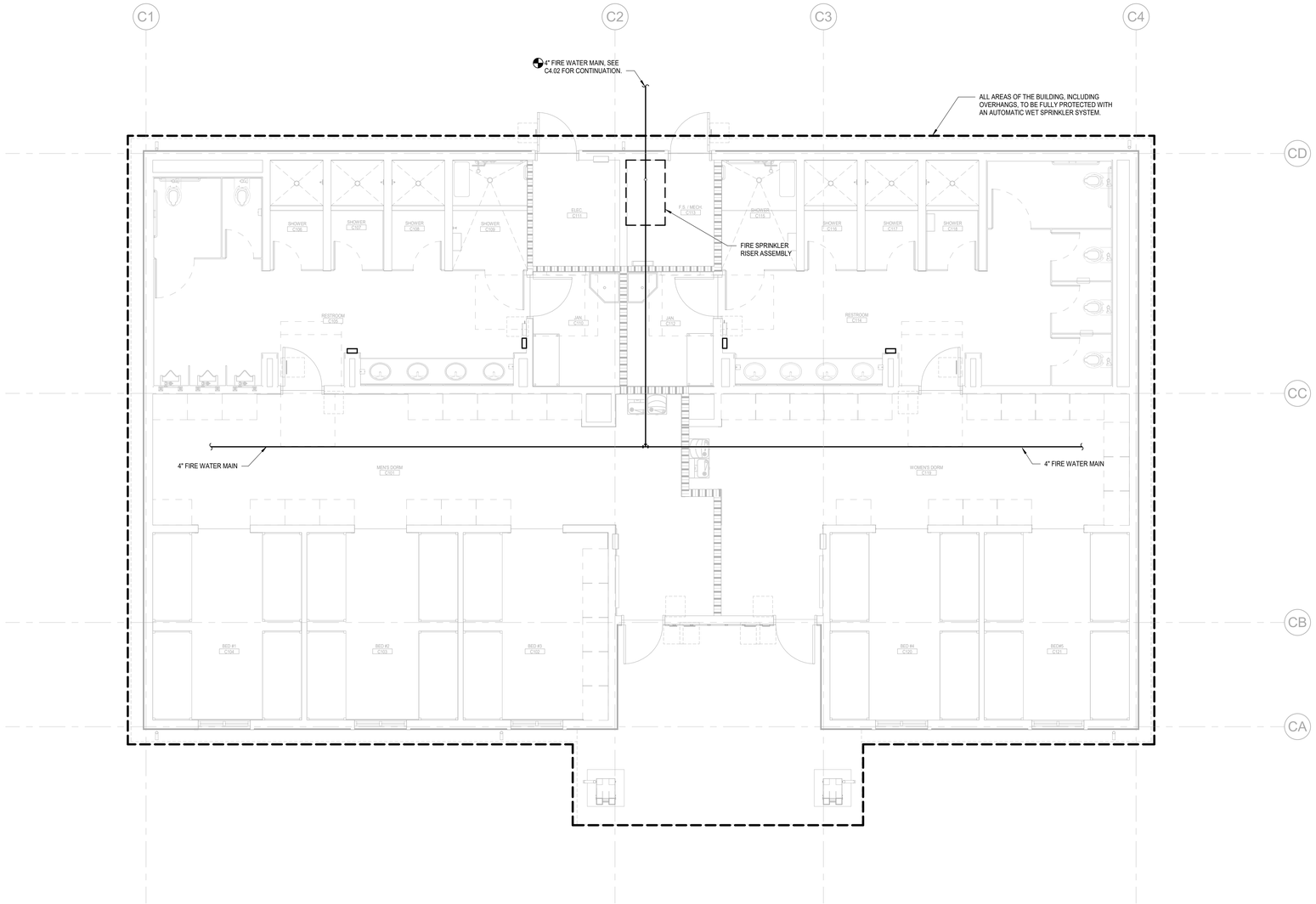

1 FP201C — COMET BLDG FIRE PROTECTION FLOOR PLAN

SCALE: 1/4" = 1'-0"

SCHEMATIC FOR REFERENCE ONLY

IDENTIFICATION STAMP
DIV. OF THE STATE ARCHITECT
APP: 02-118630 INC:
REVIEWED FOR
SS ☐ FLS ☐ ACS ☑
DATE: 04/13/2021

OFFICE OF THE STATE FIRE MARSHAL
APPROVED FIRE AND PANIC ONLY
Approval of this plan does not authorize or approve any omission or deviation from applicable regulations. Final approval is subject to field inspection. One set of approved plans shall be available on the project site at all times.
PERMIT NO. 20-N-2332-CP
REVIEWED BY: LEO CATAYLO, OSFM
DATE: 4 / /2021

GENERAL SERVICES
Department of General Services
State of California
Real Estate Services Division
Project Management & Development Branch
707 Third Street, Suite 4-105
West Sacramento, California 95605

NICHOLS MELBURG & ROSSETTO
ARCHITECTS + ENGINEERS
300 Knollcrest Drive
Redding, CA. 96002
(530) 222-3300 (530) 222-3538 FAX
http://www.nmrdesign.com

Copyright © 2019
All ideas, designs, arrangements and plans indicated or represented by this drawing are owned by, and the property of, NICHOLS, MELBURG and ROSSETTO and were created, evolved and developed for use on, and in conjunction with, the specified project. None of such ideas, designs, arrangements or plans shall be used by, or disclosed to any person, firm or corporation for any purpose whatsoever without the written permission of NICHOLS, MELBURG and ROSSETTO.

LICENSE STAMPS

REGISTERED PROFESSIONAL ENGINEER
M 33498
EXPIRES 9/30/22
MECHANICAL
STATE OF CALIFORNIA
DATE SIGNED: 10-20-20

CONSULTANT

CAPITAL
ENGINEERING CONSULTANTS, INC.
RANCHO CORDOVA, CALIFORNIA
JD - HC/JH — PM - DESIGN TEAM
181205.00 — PROJECT NO.

DRAWING STATUS
CONSTRUCTION DOCUMENTS

ISSUE

No.	Date	Description
1	10/22/2020	INITIAL PLAN REVIEW
2	01/22/2021	AGENCY RESUBMITTAL
3	03/22/2021	AGENCY RESUBMITTAL

If drawing is not 30" x 42" it is a reduced print

PROJECT
RESIDENTIAL CENTER, UKIAH: REPLACEMENT OF EXISTING RESIDENTIAL CENTER
440 EAST HILL ROAD
WILLITS, CALIFORNIA 95490
MENDOCINO COUNTY
CALIFORNIA CONSERVATION CORP

Supervisor	Designed	Drawn
		Author

DSA Application No.
02-118630

SHEET TITLE
COMET BLDG FIRE PROTECTION FLOOR PLAN

DGS Project Number	NMR Project Number
000000000001826	18-6456

Reference North: NORTH
Sheet Scale: 1/4" = 1'-0"
Sheet Number: FP201C

ISSUE DATE
July 9, 2021

Plot Date: 3/16/2021 1:23:37 PM
File Name: L:\Revit Local Files\CED_DGS CCC Willits_Comet_MP18_Central_jduvall\KTH47.rvt

DEFERRED SUBMITTAL

THE ENTIRE AUTOMATIC FIRE SPRINKLER SYSTEM IS A DEFERRED-APPROVAL ITEM.

DEFERRED SUBMITTALS FOR PERMITS SHALL BE SUBMITTED BY OTHERS INCLUDING SPRINKLER, MECHANICAL, ELECTRICAL, AND PLUMBING. THE GENERAL CONTRACTOR SHALL BE RESPONSIBLE FOR HIRING ***LICENSED PROFESSIONALS AS REQUIRED TO DESIGN AND BUILD THE SYSTEMS*** AS WELL AS PROVIDE SERVICES TO INCLUDE THE PREPARATION OF DRAWINGS AS REQUIRED FOR PERMIT FROM THE AUTHORITY HAVING JURISDICTION OVER THE PROJECT FOR REVIEW & APPROVAL. ***THE DEFERRED SUBMITTAL ITEMS SHALL NOT BE INSTALLED UNTIL THE DESIGN AND SUBMITTAL DOCUMENTS HAVE BEEN APPROVED BY THE OFFICE OF THE STATE FIRE MARSHAL.***

DEFERRED SUBMITTAL SHALL INCLUDE COMPREHENSIVE ENGINEERING ANALYSIS BY A CA LICENSED PROFESSIONAL FIRE PROTECTION ENGINEER, USING PERFORMANCE REQUIREMENTS AND DESIGN CRITERIA INDICATED ON THESE DRAWINGS AND THE CONTENTS OF SECTION 21 10 00. SUBMITTAL SHALL INCLUDE COMPLETE HYDRAULIC CALCULATIONS AND CUTSHEETS FOR MATERIALS AND PRODUCTS USED IN THE SYSTEM.

GENERAL NOTES

THE INSTALLING CONTRACTOR SHALL IDENTIFY A HYDRAULICALLY DESIGNED SPRINKLER SYSTEM WITH A PERMANENTLY MARKED WEATHERPROOF METAL OR RIGID PLASTIC SIGN, SECURE WITH CORROSION-RESISTANT WIRE, CHAIN, OR OTHER APPROVED MEANS. SUCH SIGNS SHALL BE PLACED AT THE ALARM VALVE, DRY PIPE VALVE, PREACTION VALVE, OR DELUGE VALVE SUPPLYING THE CORRESPONDING HYDRAULICALLY DESIGNED AREA.
THE AREA SHALL INCLUDE THE FOLLOWING INFORMATION:
a. LOCATION OF THE DESIGN AREA OR AREAS.
b. DISCHARGE DENSITIES OVER THE DESIGN AREA OR AREAS
c. REQUIRED FLOW AND RESIDUAL PRESSURE DEMAND AT THE BASE OF THE RISER
d. HOSE STREAM DEMAND INCLUDED IN ADDITION TO THE SPRINKLER DEMAND (2016 EDITION OF NFPA 13, SECTION 28.5 & 28.6)

THE AUTOMATIC FIRE SPRINKLER SYSTEM SHALL CONFORM TO THE REQUIREMENTS OF NFPA 13, 2016 ED. INSTALLATION OF THE FIRE SPRINKLER SYSTEM SHALL NOT BE STARTED UNTIL COMPLETE PLANS AND SPECIFICATIONS (INCLUDING WATER SUPPLY INFORMATION AND TYPE OF SYSTEM, IF ANY) HAVE BEEN APPROVED BY THE STATE FIRE MARSHAL. AT VARIOUS STAGES AND UPON COMPLETION, THE SYSTEM SHALL BE TESTED IN THE PRESENCE OF THE STATE FIRE MARSHAL AND THE INSPECTOR OF RECORD.

PROVIDE FIRESTOPPING DESIGN AND DETAILS SHOWING THE REQUIRED CLEARANCES AND FLEXIBLE FIRE-STOP SYSTEM/SEALANT WHERE SPRINKLER PIPING PENETRATES RATED WALLS WHERE OPENINGS ARE REQUIRED TO BE PROTECTED (2019 CBC SECTION 714)

A CABINET WITH A STOCK OF SPARE SPRINKLERS AND SPECIAL SPRINKLER WRENCH SHALL BE PROVIDED. LOCATION OF THE CABINET, NUMBER AND TYPE OF SPRINKLERS SHALL CONFORM TO NFPA 13 2016 ED, SECTION 16.2.7.3.

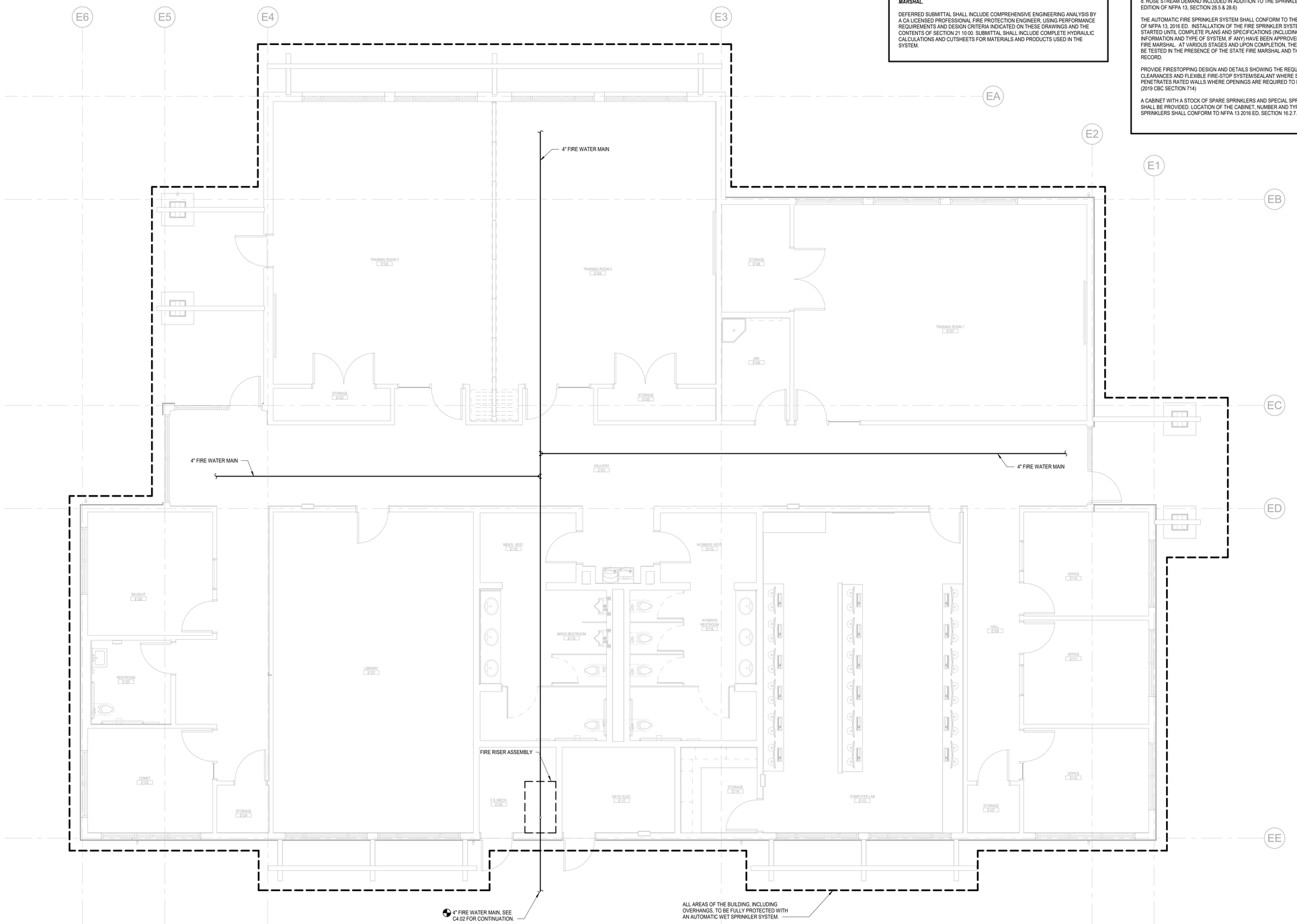

1 FP201E EDUCATION BLDG FIRE PROTECTION FLOOR PLAN

SCALE: 1/4" = 1'-0"

SCHEMATIC FOR REFERENCE ONLY

IDENTIFICATION STAMP
DIV. OF THE STATE ARCHITECT
APP: 02-118630 INC:
REVIEWED FOR
SS ☐ FLS ☐ ACS ☑
DATE: 04/13/2021

OFFICE OF THE STATE FIRE MARSHAL
APPROVED FIRE AND PANIC ONLY
Approval of this plan does not authorize or approve any omission or deviation from applicable regulations. Final approval is subject to field inspection. One set of approved plans shall be available on the project site at all times.
PERMIT NO. 20-N-2332-CP
REVIEWED BY: LEO CATAYLO, OSFM
DATE: 4 / /2021

GENERAL SERVICES
Department of General Services
State of California
Real Estate Services Division
Project Management & Development Branch
707 Third Street, Suite 4-105
West Sacramento, California 95605

NICHOLS MELBURG & ROSSETTO
ARCHITECTS + ENGINEERS
300 Knollcrest Drive
Redding, CA. 96002
(530) 222-3300 (530) 222-3538 FAX
http://www.nmrdesign.com

Copyright © 2019
All ideas, designs, arrangements and plans indicated or represented by this drawing are owned by, and the property of, NICHOLS, MELBURG and ROSSETTO and were created, evolved and developed for use on, and in conjunction with, the specified project. None of such ideas, designs, arrangements or plans shall be used by, or disclosed to any person, firm or corporation for any purpose whatsoever without the written permission of NICHOLS, MELBURG and ROSSETTO.

LICENSE STAMPS

REGISTERED PROFESSIONAL ENGINEER
M 33498
EXPIRES 9/30/22
MECHANICAL
STATE OF CALIFORNIA
DATE SIGNED: 10-20-20

CONSULTANT

CAPITAL
ENGINEERING CONSULTANTS, INC.
RANCHO CORDOVA, CALIFORNIA
JD - HC/JH — PM - DESIGN TEAM
181205.00 — PROJECT NO.

DRAWING STATUS
CONSTRUCTION DOCUMENTS

ISSUE

No.	Date	Description
1	10/22/2020	INITIAL PLAN REVIEW
2	01/22/2021	AGENCY RESUBMITTAL
3	03/22/2021	AGENCY RESUBMITTAL

If drawing is not 30" x 42" it is a reduced print

PROJECT
RESIDENTIAL CENTER, UKIAH: REPLACEMENT OF EXISTING RESIDENTIAL CENTER
440 EAST HILL ROAD
WILLITS, CALIFORNIA 95490
MENDOCINO COUNTY
CALIFORNIA CONSERVATION CORP

Supervisor	Designed	Drawn
		Author

DSA Application No.
02-118630

SHEET TITLE
EDUCATION BLDG FIRE PROTECTION FLOOR PLAN

DGS Project Number: 0000000000001826
NMR Project Number: 18-6456

Reference North
Sheet Scale: 1/4" = 1'-0"
Sheet Number: FP201E

ISSUE DATE
July 9, 2021

Plot Date: 3/16/2021 1:28:15 PM
File Name: L:\Revit Local Files\EDCI_DGS CCC Willits_ED_MP18_Central_jdvoa\KT147.rvt

DEFERRED SUBMITTAL

THE ENTIRE AUTOMATIC FIRE SPRINKLER SYSTEM IS A DEFERRED-APPROVAL ITEM.

DEFERRED SUBMITTALS FOR PERMITS SHALL BE SUBMITTED BY OTHERS INCLUDING SPRINKLER, MECHANICAL, ELECTRICAL, AND PLUMBING. THE GENERAL CONTRACTOR SHALL BE RESPONSIBLE FOR HIRING ***LICENSED PROFESSIONALS AS REQUIRED TO DESIGN AND BUILD THE SYSTEMS*** AS WELL AS PROVIDE SERVICES TO INCLUDE THE PREPARATION OF DRAWINGS AS REQUIRED FOR PERMIT FROM THE AUTHORITY HAVING JURISDICTION OVER THE PROJECT FOR REVIEW & APPROVAL. ***THE DEFERRED SUBMITTAL ITEMS SHALL NOT BE INSTALLED UNTIL THE DESIGN AND SUBMITTAL DOCUMENTS HAVE BEEN APPROVED BY THE OFFICE OF THE STATE FIRE MARSHAL.***

DEFERRED SUBMITTAL SHALL INCLUDE COMPREHENSIVE ENGINEERING ANALYSIS BY A CA LICENSED PROFESSIONAL FIRE PROTECTION ENGINEER, USING PERFORMANCE REQUIREMENTS AND DESIGN CRITERIA INDICATED ON THESE DRAWINGS AND THE CONTENTS OF SECTION 21 10 00. SUBMITTAL SHALL INCLUDE COMPLETE HYDRAULIC CALCULATIONS AND CUTSHEETS FOR MATERIALS AND PRODUCTS USED IN THE SYSTEM.

GENERAL NOTES

THE INSTALLING CONTRACTOR SHALL IDENTIFY A HYDRAULICALLY DESIGNED SPRINKLER SYSTEM WITH A PERMANENTLY MARKED WEATHERPROOF METAL OR RIGID PLASTIC SIGN, SECURE WITH CORROSION-RESISTANT WIRE, CHAIN, OR OTHER APPROVED MEANS. SUCH SIGNS SHALL BE PLACED AT THE ALARM VALVE, DRY PIPE VALVE, PREACTION VALVE, OR DELUGE VALVE SUPPLYING THE CORRESPONDING HYDRAULICALLY DESIGNED AREA.
THE AREA SHALL INCLUDE THE FOLLOWING INFORMATION:
a. LOCATION OF THE DESIGN AREA OR AREAS.
b. DISCHARGE DENSITIES OVER THE DESIGN AREA OR AREAS
c. REQUIRED FLOW AND RESIDUAL PRESSURE DEMAND AT THE BASE OF THE RISER
d. HOSE STREAM DEMAND INCLUDED IN ADDITION TO THE SPRINKLER DEMAND (2016 EDITION OF NFPA 13, SECTION 28.5 & 28.6)

THE AUTOMATIC FIRE SPRINKLER SYSTEM SHALL CONFORM TO THE REQUIREMENTS OF NFPA 13, 2016 ED. INSTALLATION OF THE FIRE SPRINKLER SYSTEM SHALL NOT BE STARTED UNTIL COMPLETE PLANS AND SPECIFICATIONS (INCLUDING WATER SUPPLY INFORMATION AND TYPE OF SYSTEM, IF ANY) HAVE BEEN APPROVED BY THE STATE FIRE MARSHAL. AT VARIOUS STAGES AND UPON COMPLETION, THE SYSTEM SHALL BE TESTED IN THE PRESENCE OF THE STATE FIRE MARSHAL AND THE INSPECTOR OF RECORD.

PROVIDE FIRESTOPPING DESIGN AND DETAILS SHOWING THE REQUIRED CLEARANCES AND FLEXIBLE FIRE-STOP SYSTEM/SEALANT WHERE SPRINKLER PIPING PENETRATES RATED WALLS WHERE OPENINGS ARE REQUIRED TO BE PROTECTED (2019 CBC SECTION 714)

A CABINET WITH A STOCK OF SPARE SPRINKLERS AND SPECIAL SPRINKLER WRENCH SHALL BE PROVIDED. LOCATION OF THE CABINET, NUMBER AND TYPE OF SPRINKLERS SHALL CONFORM TO NFPA 13 2016 ED, SECTION 16.2.7.3.

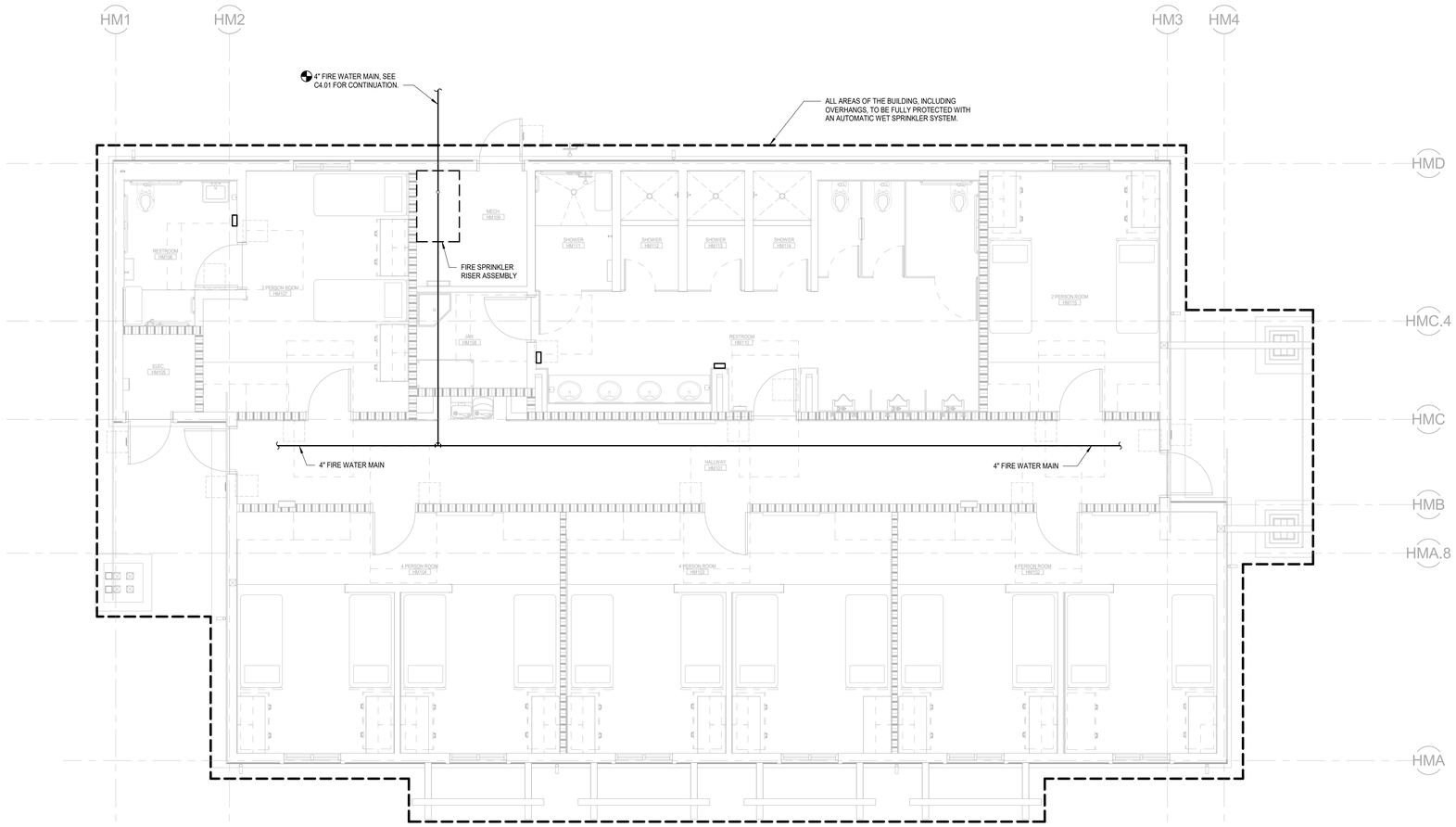

1 FP201HM MEN'S HOUSING FIRE PROTECTION FLOOR PLAN
SCALE: 1/4" = 1'-0"

SCHEMATIC FOR REFERENCE ONLY

IDENTIFICATION STAMP
DIV. OF THE STATE ARCHITECT
APP: 02-118630 INC:
REVIEWED FOR
SS ☐ FLS ☐ ACS ☑
DATE: 04/13/2021

OFFICE OF THE STATE FIRE MARSHAL
APPROVED FIRE AND PANIC ONLY
Approval of this plan does not authorize or approve any omission or deviation from applicable regulations. Final approval is subject to field inspection. One set of approved plans shall be available on the project site at all times.
PERMIT NO. 20-N-2332-CP
REVIEWED BY: LEO CATAYLO, OSFM
DATE: 4 / /2021

GENERAL SERVICES
Department of General Services
State of California
Real Estate Services Division
Project Management & Development Branch
707 Third Street, Suite 4-105
West Sacramento, California 95605

NICHOLS MELBURG & ROSSETTO
ARCHITECTS + ENGINEERS
300 Knollcrest Drive
Redding, CA. 96002
(530) 222-3300 (530) 222-3538 FAX
http://www.nmrdesign.com

Copyright © 2019
All ideas, designs, arrangements and plans indicated or represented by this drawing are owned by, and the property of, NICHOLS, MELBURG and ROSSETTO and were created, evolved and developed for use on, and in conjunction with, the specified project. None of such ideas, designs, arrangements or plans shall be used by, or disclosed to any person, firm or corporation for any purpose whatsoever without the written permission of NICHOLS, MELBURG and ROSSETTO.

LICENSE STAMPS

REGISTERED PROFESSIONAL ENGINEER
M 33498
EXPIRES 9/30/22
MECHANICAL
STATE OF CALIFORNIA
DATE SIGNED: 10-20-20

CONSULTANT

CAPITAL
ENGINEERING CONSULTANTS, INC.
RANCHO CORDOVA, CALIFORNIA
JD - HCJH — PM - DESIGN TEAM
181205.00 — PROJECT NO.

DRAWING STATUS
CONSTRUCTION DOCUMENTS

ISSUE

No.	Date	Description
1	10/22/2020	INITIAL PLAN REVIEW
2	01/22/2021	AGENCY RESUBMITTAL
3	03/22/2021	AGENCY RESUBMITTAL

If drawing is not 30" x 42" it is a reduced print

PROJECT
RESIDENTIAL CENTER, UKIAH: REPLACEMENT OF EXISTING RESIDENTIAL CENTER
440 EAST HILL ROAD
WILLITS, CALIFORNIA 95490
MENDOCINO COUNTY
CALIFORNIA CONSERVATION CORP

Supervisor	Designed	Drawn
		Author

DSA Application No.
02-118630

SHEET TITLE
MEN'S HOUSING FIRE PROTECTION FLOOR PLAN

DGS Project Number	NMR Project Number
0000000000001826	18-6456

Reference North — Sheet Scale: 1/4" = 1'-0"
Sheet Number: FP201HM

ISSUE DATE
July 9, 2021

Plot Date: 3/18/2021 1:27:14 PM
File Name: L:\Revit Local Files\DECI_DGS CCC Willits_Dorm_Men_MP18_Central_jdavak\TH47.rvt

DEFERRED SUBMITTAL

THE ENTIRE AUTOMATIC FIRE SPRINKLER SYSTEM IS A DEFERRED-APPROVAL ITEM.

DEFERRED SUBMITTALS FOR PERMITS SHALL BE SUBMITTED BY OTHERS INCLUDING SPRINKLER, MECHANICAL, ELECTRICAL, AND PLUMBING. THE GENERAL CONTRACTOR SHALL BE RESPONSIBLE FOR HIRING ***LICENSED PROFESSIONALS AS REQUIRED TO DESIGN AND BUILD THE SYSTEMS*** AS WELL AS PROVIDE SERVICES TO INCLUDE THE PREPARATION OF DRAWINGS AS REQUIRED FOR PERMIT FROM THE AUTHORITY HAVING JURISDICTION OVER THE PROJECT FOR REVIEW & APPROVAL. ***THE DEFERRED SUBMITTAL ITEMS SHALL NOT BE INSTALLED UNTIL THE DESIGN AND SUBMITTAL DOCUMENTS HAVE BEEN APPROVED BY THE OFFICE OF THE STATE FIRE MARSHAL.***

DEFERRED SUBMITTAL SHALL INCLUDE COMPREHENSIVE ENGINEERING ANALYSIS BY A CA LICENSED PROFESSIONAL FIRE PROTECTION ENGINEER, USING PERFORMANCE REQUIREMENTS AND DESIGN CRITERIA INDICATED ON THESE DRAWINGS AND THE CONTENTS OF SECTION 21 10 00. SUBMITTAL SHALL INCLUDE COMPLETE HYDRAULIC CALCULATIONS AND CUTSHEETS FOR MATERIALS AND PRODUCTS USED IN THE SYSTEM.

GENERAL NOTES

THE INSTALLING CONTRACTOR SHALL IDENTIFY A HYDRAULICALLY DESIGNED SPRINKLER SYSTEM WITH A PERMANENTLY MARKED WEATHERPROOF METAL OR RIGID PLASTIC SIGN, SECURE WITH CORROSION-RESISTANT WIRE, CHAIN, OR OTHER APPROVED MEANS. SUCH SIGNS SHALL BE PLACED AT THE ALARM VALVE, DRY PIPE VALVE, PREACTION VALVE, OR DELUGE VALVE SUPPLYING THE CORRESPONDING HYDRAULICALLY DESIGNED AREA.
THE AREA SHALL INCLUDE THE FOLLOWING INFORMATION:
a. LOCATION OF THE DESIGN AREA OR AREAS.
b. DISCHARGE DENSITIES OVER THE DESIGN AREA OR AREAS
c. REQUIRED FLOW AND RESIDUAL PRESSURE DEMAND AT THE BASE OF THE RISER
d. HOSE STREAM DEMAND INCLUDED IN ADDITION TO THE SPRINKLER DEMAND (2016 EDITION OF NFPA 13, SECTION 28.5 & 28.6)

THE AUTOMATIC FIRE SPRINKLER SYSTEM SHALL CONFORM TO THE REQUIREMENTS OF NFPA 13, 2016 ED. INSTALLATION OF THE FIRE SPRINKLER SYSTEM SHALL NOT BE STARTED UNTIL COMPLETE PLANS AND SPECIFICATIONS (INCLUDING WATER SUPPLY INFORMATION AND TYPE OF SYSTEM, IF ANY) HAVE BEEN APPROVED BY THE STATE FIRE MARSHAL. AT VARIOUS STAGES AND UPON COMPLETION, THE SYSTEM SHALL BE TESTED IN THE PRESENCE OF THE STATE FIRE MARSHAL AND THE INSPECTOR OF RECORD.

PROVIDE FIRESTOPPING DESIGN AND DETAILS SHOWING THE REQUIRED CLEARANCES AND FLEXIBLE FIRE-STOP SYSTEM/SEALANT WHERE SPRINKLER PIPING PENETRATES RATED WALLS WHERE OPENINGS ARE REQUIRED TO BE PROTECTED (2019 CBC SECTION 714)

A CABINET WITH A STOCK OF SPARE SPRINKLERS AND SPECIAL SPRINKLER WRENCH SHALL BE PROVIDED. LOCATION OF THE CABINET, NUMBER AND TYPE OF SPRINKLERS SHALL CONFORM TO NFPA 13 2016 ED, SECTION 16.2.7.3.

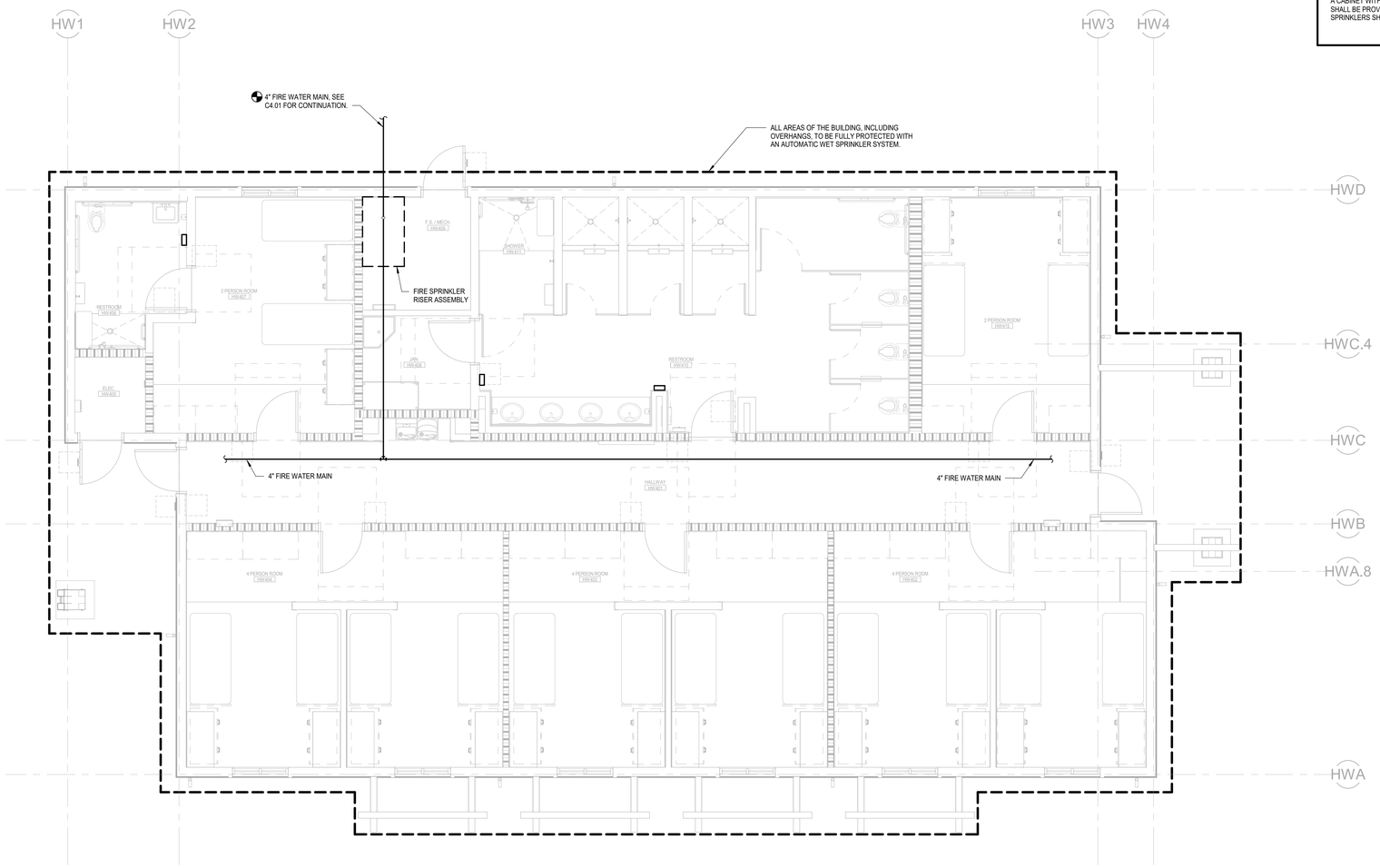

SCHEMATIC FOR REFERENCE ONLY

1 FP201HW WOMEN'S HOUSING FIRE PROTECTION FLOOR PLAN
SCALE: 1/4" = 1'-0"

Plot Date: 3/18/2021 12:02:05 PM
File Name: L:\Revit Local Files\CEC_DGS CCC Willits_Dorm_Women_MP18_Central_jdvnalKTH47.rvt

IDENTIFICATION STAMP
DIV. OF THE STATE ARCHITECT
APP: 02-118630 INC:
REVIEWED FOR
SS ☐ FLS ☐ ACS ☑
DATE: 04/13/2021

OFFICE OF THE STATE FIRE MARSHAL
APPROVED FIRE AND PANIC ONLY
Approval of this plan does not authorize or approve any omission or deviation from applicable regulations. Final approval is subject to field inspection. One set of approved plans shall be available on the project site at all times.
PERMIT NO. 20-N-2332-CP
REVIEWED BY: LEO CATAYLO, OSFM
DATE: 4 / /2021

GENERAL SERVICES
Department of General Services
State of California
Real Estate Services Division
Project Management & Development Branch
707 Third Street, Suite 4-105
West Sacramento, California 95605

NICHOLS MELBURG & ROSSETTO
ARCHITECTS + ENGINEERS
300 Knollcrest Drive
Redding, CA. 96002
(530) 222-3300 (530) 222-3538 FAX
http://www.nmrdesign.com

Copyright © 2019
All ideas, designs, arrangements and plans indicated or represented by this drawing are owned by, and the property of, NICHOLS, MELBURG and ROSSETTO and were created, evolved and developed for use on, and in conjunction with, the specified project. None of such ideas, designs, arrangements or plans shall be used by, or disclosed to any person, firm or corporation for any purpose whatsoever without the written permission of NICHOLS, MELBURG and ROSSETTO.

LICENSE STAMPS

REGISTERED PROFESSIONAL ENGINEER
M 33498
EXPIRES 9/30/22
MECHANICAL
STATE OF CALIFORNIA
DATE SIGNED: 10-20-20

CONSULTANT

CAPITAL
ENGINEERING CONSULTANTS, INC.
RANCHO CORDOVA, CALIFORNIA
JD - HCJH — PM - DESIGN TEAM
181205.00 — PROJECT NO.

DRAWING STATUS
CONSTRUCTION DOCUMENTS

ISSUE

No.	Date	Description
1	10/22/2020	INITIAL PLAN REVIEW
2	01/22/2021	AGENCY RESUBMITTAL
3	03/22/2021	AGENCY RESUBMITTAL

If drawing is not 30" x 42" it is a reduced print

PROJECT
RESIDENTIAL CENTER, UKIAH: REPLACEMENT OF EXISTING RESIDENTIAL CENTER
440 EAST HILL ROAD
WILLITS, CALIFORNIA 95490
MENDOCINO COUNTY
CALIFORNIA CONSERVATION CORP

Supervisor	Designed	Drawn
		Author

DSA Application No.
02-118630

SHEET TITLE
WOMEN'S HOUSING FIRE PROTECTION FLOOR PLAN

DGS Project Number: 000000000001826
NMR Project Number: 18-6456

Reference North
Sheet Scale: 1/4" = 1'-0"
Sheet Number: FP201HW

ISSUE DATE
July 9, 2021

DEFERRED SUBMITTAL

THE ENTIRE AUTOMATIC FIRE SPRINKLER SYSTEM IS A DEFERRED-APPROVAL ITEM.

DEFERRED SUBMITTALS FOR PERMITS SHALL BE SUBMITTED BY OTHERS INCLUDING SPRINKLER, MECHANICAL, ELECTRICAL, AND PLUMBING. THE GENERAL CONTRACTOR SHALL BE RESPONSIBLE FOR HIRING ***LICENSED PROFESSIONALS AS REQUIRED TO DESIGN AND BUILD THE SYSTEMS*** AS WELL AS PROVIDE SERVICES TO INCLUDE THE PREPARATION OF DRAWINGS AS REQUIRED FOR PERMIT FROM THE AUTHORITY HAVING JURISDICTION OVER THE PROJECT FOR REVIEW & APPROVAL. ***THE DEFERRED SUBMITTAL ITEMS SHALL NOT BE INSTALLED UNTIL THE DESIGN AND SUBMITTAL DOCUMENTS HAVE BEEN APPROVED BY THE OFFICE OF THE STATE FIRE MARSHAL.***

DEFERRED SUBMITTAL SHALL INCLUDE COMPREHENSIVE ENGINEERING ANALYSIS BY A CA LICENSED PROFESSIONAL FIRE PROTECTION ENGINEER, USING PERFORMANCE REQUIREMENTS AND DESIGN CRITERIA INDICATED ON THESE DRAWINGS AND THE CONTENTS OF SECTION 21 10 00. SUBMITTAL SHALL INCLUDE COMPLETE HYDRAULIC CALCULATIONS AND CUTSHEETS FOR MATERIALS AND PRODUCTS USED IN THE SYSTEM.

GENERAL NOTES

THE INSTALLING CONTRACTOR SHALL IDENTIFY A HYDRAULICALLY DESIGNED SPRINKLER SYSTEM WITH A PERMANENTLY MARKED WEATHERPROOF METAL OR RIGID PLASTIC SIGN, SECURE WITH CORROSION-RESISTANT WIRE, CHAIN, OR OTHER APPROVED MEANS. SUCH SIGNS SHALL BE PLACED AT THE ALARM VALVE, DRY PIPE VALVE, PREACTION VALVE, OR DELUGE VALVE SUPPLYING THE CORRESPONDING HYDRAULICALLY DESIGNED AREA.
THE AREA SHALL INCLUDE THE FOLLOWING INFORMATION:
a. LOCATION OF THE DESIGN AREA OR AREAS.
b. DISCHARGE DENSITIES OVER THE DESIGN AREA OR AREAS
c. REQUIRED FLOW AND RESIDUAL PRESSURE DEMAND AT THE BASE OF THE RISER
d. HOSE STREAM DEMAND INCLUDED IN ADDITION TO THE SPRINKLER DEMAND (2016 EDITION OF NFPA 13, SECTION 28.5 & 28.6)

THE AUTOMATIC FIRE SPRINKLER SYSTEM SHALL CONFORM TO THE REQUIREMENTS OF NFPA 13, 2016 ED. INSTALLATION OF THE FIRE SPRINKLER SYSTEM SHALL NOT BE STARTED UNTIL COMPLETE PLANS AND SPECIFICATIONS (INCLUDING WATER SUPPLY INFORMATION AND TYPE OF SYSTEM, IF ANY) HAVE BEEN APPROVED BY THE STATE FIRE MARSHAL. AT VARIOUS STAGES AND UPON COMPLETION, THE SYSTEM SHALL BE TESTED IN THE PRESENCE OF THE STATE FIRE MARSHAL AND THE INSPECTOR OF RECORD.

PROVIDE FIRESTOPPING DESIGN AND DETAILS SHOWING THE REQUIRED CLEARANCES AND FLEXIBLE FIRE-STOP SYSTEM/SEALANT WHERE SPRINKLER PIPING PENETRATES RATED WALLS WHERE OPENINGS ARE REQUIRED TO BE PROTECTED (2019 CBC SECTION 714)

A CABINET WITH A STOCK OF SPARE SPRINKLERS AND SPECIAL SPRINKLER WRENCH SHALL BE PROVIDED. LOCATION OF THE CABINET, NUMBER AND TYPE OF SPRINKLERS SHALL CONFORM TO NFPA 13 2016 ED, SECTION 16.2.7.3.

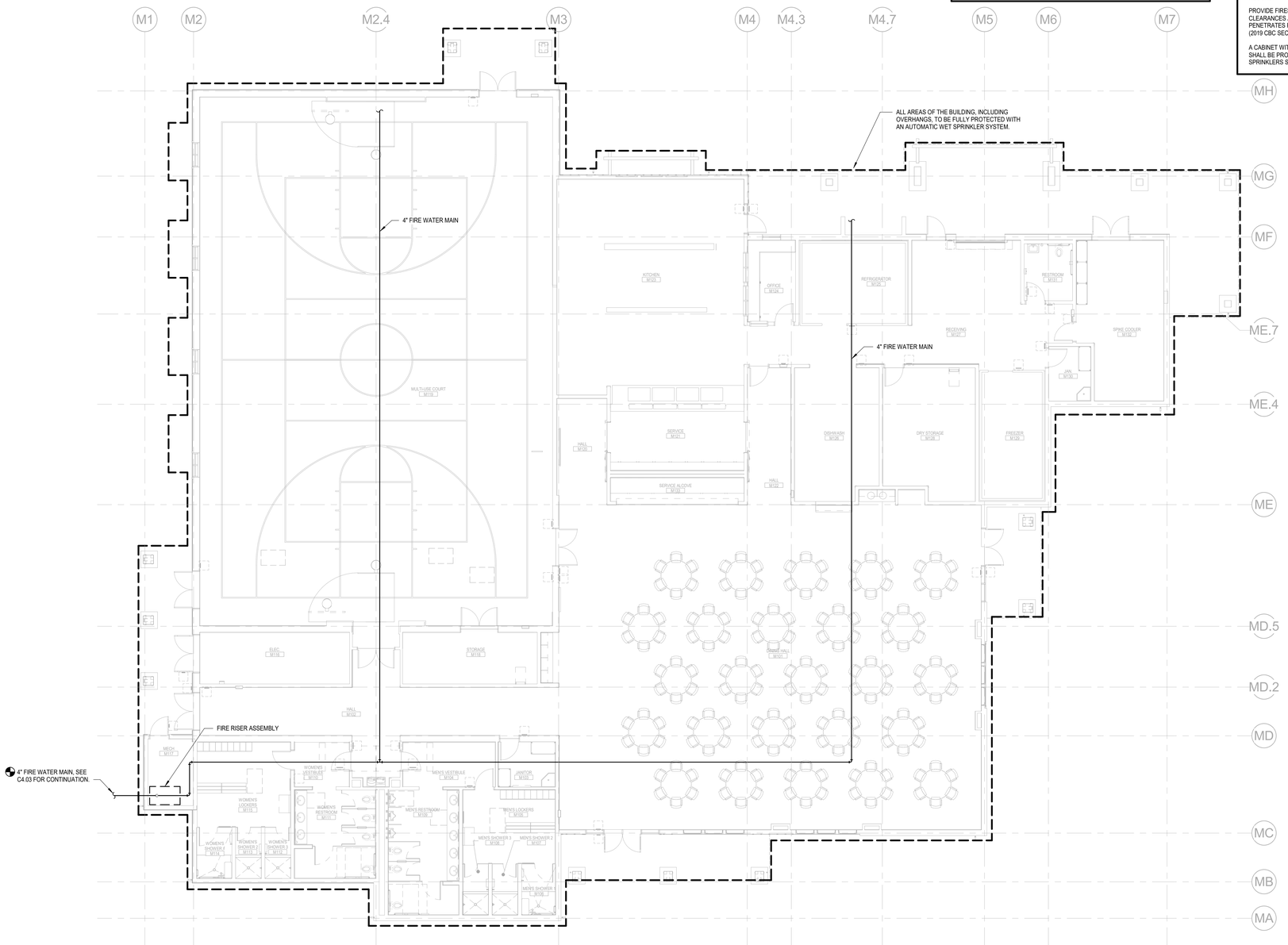

1 FP201M — MULTI-PURPOSE BLDG FIRE PROTECTION FLOOR PLAN
SCALE: 1/8" = 1'-0"

SCHEMATIC FOR REFERENCE ONLY

Plot Date: 3/18/2021 1:25:38 PM
File Name: L:\Revit Local Files\DECI_DGS CCC Willits_MP_MP18_Central_jdavis\KTH47.rvt

IDENTIFICATION STAMP
DIV. OF THE STATE ARCHITECT
APP: 02-118630 INC:
REVIEWED FOR
SS ☐ FLS ☐ ACS ☑
DATE: 04/13/2021

OFFICE OF THE STATE FIRE MARSHAL
APPROVED FIRE AND PANIC ONLY
Approval of this plan does not authorize or approve any omission or deviation from applicable regulations. Final approval is subject to field inspection. One set of approved plans shall be available on the project site at all times.
PERMIT NO. 20-N-2332-CP
REVIEWED BY: LEO CATAYLO, OSFM
DATE: 4 / 1 /2021

GENERAL SERVICES
Department of General Services
State of California
Real Estate Services Division
Project Management & Development Branch
707 Third Street, Suite 4-105
West Sacramento, California 95605

NICHOLS MELBURG & ROSSETTO
ARCHITECTS + ENGINEERS
300 Knollcrest Drive
Redding, CA. 96002
(530) 222-3300 (530) 222-3538 FAX
http://www.nmrdesign.com

Copyright © 2019
All ideas, designs, arrangements and plans indicated or represented by this drawing are owned by, and the property of, NICHOLS, MELBURG and ROSSETTO and were created, evolved and developed for use on, and in conjunction with, the specified project. None of such ideas, designs, arrangements or plans shall be used by, or disclosed to any person, firm or corporation for any purpose whatsoever without the written permission of NICHOLS, MELBURG and ROSSETTO.

LICENSE STAMPS

REGISTERED PROFESSIONAL ENGINEER — M 33498 — EXPIRES 9/30/22 — MECHANICAL — STATE OF CALIFORNIA
DATE SIGNED: 10-20-20

CONSULTANT

CAPITAL
ENGINEERING CONSULTANTS, INC.
RANCHO CORDOVA, CALIFORNIA
JD - HC/JH — PM - DESIGN TEAM
181205.00 — PROJECT NO.

DRAWING STATUS
CONSTRUCTION DOCUMENTS

ISSUE

No.	Date	Description
1	10/22/2020	INITIAL PLAN REVIEW
2	01/22/2021	AGENCY RESUBMITTAL
3	03/22/2021	AGENCY RESUBMITTAL

If drawing is not 30" x 42" it is a reduced print

PROJECT
RESIDENTIAL CENTER, UKIAH: REPLACEMENT OF EXISTING RESIDENTIAL CENTER
440 EAST HILL ROAD
WILLITS, CALIFORNIA 95490
MENDOCINO COUNTY
CALIFORNIA CONSERVATION CORP

Supervisor	Designed	Drawn
		Author

DSA Application No.
02-118630

SHEET TITLE
MULTI-PURPOSE BLDG FIRE PROTECTION FLOOR PLAN

DGS Project Number: 0000000000001826
NMR Project Number: 18-6456

Reference North
Sheet Scale: 1/8" = 1'-0"
Sheet Number: FP201M

ISSUE DATE
July 9, 2021

DEFERRED SUBMITTAL

THE ENTIRE AUTOMATIC FIRE SPRINKLER SYSTEM IS A DEFERRED-APPROVAL ITEM.

DEFERRED SUBMITTALS FOR PERMITS SHALL BE SUBMITTED BY OTHERS INCLUDING SPRINKLER, MECHANICAL, ELECTRICAL, AND PLUMBING. THE GENERAL CONTRACTOR SHALL BE RESPONSIBLE FOR HIRING ***LICENSED PROFESSIONALS AS REQUIRED TO DESIGN AND BUILD THE SYSTEMS*** AS WELL AS PROVIDE SERVICES TO INCLUDE THE PREPARATION OF DRAWINGS AS REQUIRED FOR PERMIT FROM THE AUTHORITY HAVING JURISDICTION OVER THE PROJECT FOR REVIEW & APPROVAL. ***THE DEFERRED SUBMITTAL ITEMS SHALL NOT BE INSTALLED UNTIL THE DESIGN AND SUBMITTAL DOCUMENTS HAVE BEEN APPROVED BY THE OFFICE OF THE STATE FIRE MARSHAL.***

DEFERRED SUBMITTAL SHALL INCLUDE COMPREHENSIVE ENGINEERING ANALYSIS BY A CA LICENSED PROFESSIONAL FIRE PROTECTION ENGINEER, USING PERFORMANCE REQUIREMENTS AND DESIGN CRITERIA INDICATED ON THESE DRAWINGS AND THE CONTENTS OF SECTION 21 10 00. SUBMITTAL SHALL INCLUDE COMPLETE HYDRAULIC CALCULATIONS AND CUTSHEETS FOR MATERIALS AND PRODUCTS USED IN THE SYSTEM.

GENERAL NOTES

THE INSTALLING CONTRACTOR SHALL IDENTIFY A HYDRAULICALLY DESIGNED SPRINKLER SYSTEM WITH A PERMANENTLY MARKED WEATHERPROOF METAL OR RIGID PLASTIC SIGN, SECURE WITH CORROSION-RESISTANT WIRE, CHAIN, OR OTHER APPROVED MEANS. SUCH SIGNS SHALL BE PLACED AT THE ALARM VALVE, DRY PIPE VALVE, PREACTION VALVE, OR DELUGE VALVE SUPPLYING THE CORRESPONDING HYDRAULICALLY DESIGNED AREA.
THE AREA SHALL INCLUDE THE FOLLOWING INFORMATION:
a. LOCATION OF THE DESIGN AREA OR AREAS.
b. DISCHARGE DENSITIES OVER THE DESIGN AREA OR AREAS
c. REQUIRED FLOW AND RESIDUAL PRESSURE DEMAND AT THE BASE OF THE RISER
d. HOSE STREAM DEMAND INCLUDED IN ADDITION TO THE SPRINKLER DEMAND (2016 EDITION OF NFPA 13, SECTION 28.5 & 28.6)

THE AUTOMATIC FIRE SPRINKLER SYSTEM SHALL CONFORM TO THE REQUIREMENTS OF NFPA 13, 2016 ED. INSTALLATION OF THE FIRE SPRINKLER SYSTEM SHALL NOT BE STARTED UNTIL COMPLETE PLANS AND SPECIFICATIONS (INCLUDING WATER SUPPLY INFORMATION AND TYPE OF SYSTEM, IF ANY) HAVE BEEN APPROVED BY THE STATE FIRE MARSHAL. AT VARIOUS STAGES AND UPON COMPLETION, THE SYSTEM SHALL BE TESTED IN THE PRESENCE OF THE STATE FIRE MARSHAL AND THE INSPECTOR OF RECORD.

PROVIDE FIRESTOPPING DESIGN AND DETAILS SHOWING THE REQUIRED CLEARANCES AND FLEXIBLE FIRE-STOP SYSTEM/SEALANT WHERE SPRINKLER PIPING PENETRATES RATED WALLS WHERE OPENINGS ARE REQUIRED TO BE PROTECTED (2019 CBC SECTION 714)

A CABINET WITH A STOCK OF SPARE SPRINKLERS AND SPECIAL SPRINKLER WRENCH SHALL BE PROVIDED. LOCATION OF THE CABINET, NUMBER AND TYPE OF SPRINKLERS SHALL CONFORM TO NFPA 13 2016 ED, SECTION 16.2.7.3.

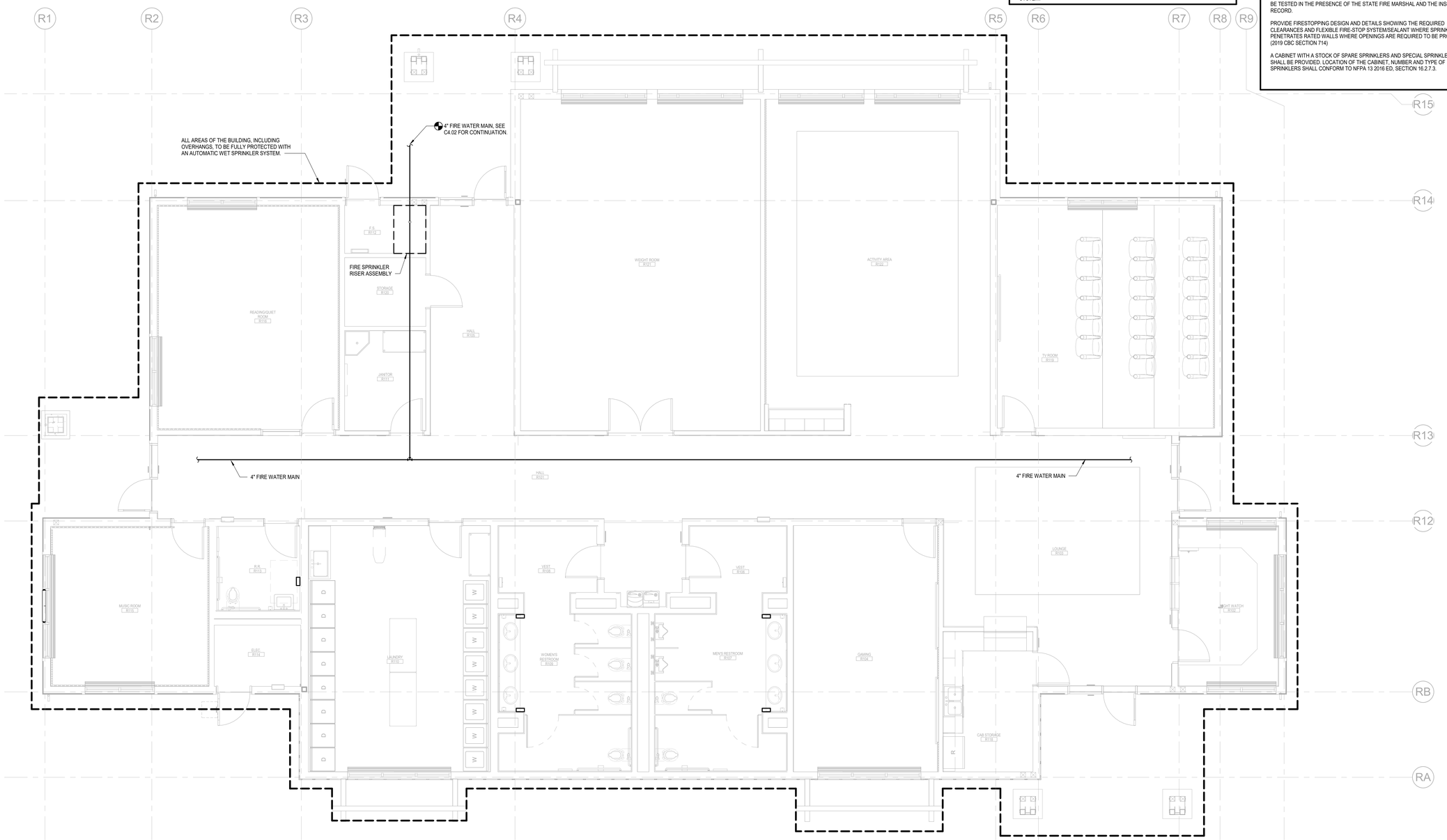

1 FP201R RECREATION BLDG FIRE PROTECTION FLOOR PLAN

SCALE: 1/4" = 1'-0"

SCHEMATIC FOR REFERENCE ONLY

IDENTIFICATION STAMP
DIV. OF THE STATE ARCHITECT
APP: 02-118630 INC:
REVIEWED FOR
SS ☐ FLS ☐ ACS ☑
DATE: 04/13/2021

OFFICE OF THE STATE FIRE MARSHAL
APPROVED FIRE AND PANIC ONLY
Approval of this plan does not authorize or approve any omission or deviation from applicable regulations. Final approval is subject to field inspection. One set of approved plans shall be available on the project site at all times.
PERMIT NO. 20-N-2332-CP
REVIEWED BY: LEO CATAYLO, OSFM
DATE: 4 / /2021

GENERAL SERVICES
Department of General Services
State of California
Real Estate Services Division
Project Management & Development Branch
707 Third Street, Suite 4-105
West Sacramento, California 95605

NICHOLS MELBURG & ROSSETTO
ARCHITECTS + ENGINEERS
300 Knollcrest Drive
Redding, CA. 96002
(530) 222-3300 (530) 222-3538 FAX
http://www.nmrdesign.com

Copyright © 2019
All ideas, designs, arrangements and plans indicated or represented by this drawing are owned by, and the property of, NICHOLS, MELBURG and ROSSETTO and were created, evolved and developed for use on, and in conjunction with, the specified project. None of such ideas, designs, arrangements or plans shall be used by, or disclosed to any person, firm or corporation for any purpose whatsoever without the written permission of NICHOLS, MELBURG and ROSSETTO

LICENSE STAMPS

REGISTERED PROFESSIONAL ENGINEER
KATHY D. DAVIS
M 33498
EXPIRES 9/30/22
MECHANICAL
STATE OF CALIFORNIA

DATE SIGNED: 10-20-20

CONSULTANT

CAPITAL
ENGINEERING CONSULTANTS, INC.
RANCHO CORDOVA, CALIFORNIA
JD - HC/JH — PM - DESIGN TEAM
181205.00 — PROJECT NO.

DRAWING STATUS
CONSTRUCTION DOCUMENTS

ISSUE

No.	Date	Description
1	10/22/2020	INITIAL PLAN REVIEW
2	01/22/2021	AGENCY RESUBMITTAL
3	03/22/2021	AGENCY RESUBMITTAL

If drawing is not 30" x 42" it is a reduced print

PROJECT
RESIDENTIAL CENTER, UKIAH: REPLACEMENT OF EXISTING RESIDENTIAL CENTER
440 EAST HILL ROAD
WILLITS, CALIFORNIA 95490
MENDOCINO COUNTY
CALIFORNIA CONSERVATION CORP

Supervisor	Designed	Drawn
		Author

DSA Application No.
02-118630

SHEET TITLE
RECREATION BLDG FIRE PROTECTION FLOOR PLAN

DGS Project Number: 0000000000001826
NMR Project Number: 18-6456

Reference North: NORTH
Sheet Scale: 1/4" = 1'-0"
Sheet Number: FP201R

ISSUE DATE
July 9, 2021

Plot Date: 3/19/2021 1:24:03 PM
File Name: J:\Revit Local Files\ECI_DGS CCC Willits_Rec_MP18_Central_jdovak\KTH47.rvt

DEFERRED SUBMITTAL

THE ENTIRE AUTOMATIC FIRE SPRINKLER SYSTEM IS A DEFERRED-APPROVAL ITEM.

DEFERRED SUBMITTALS FOR PERMITS SHALL BE SUBMITTED BY OTHERS INCLUDING SPRINKLER, MECHANICAL, ELECTRICAL, AND PLUMBING. THE GENERAL CONTRACTOR SHALL BE RESPONSIBLE FOR HIRING ***LICENSED PROFESSIONALS AS REQUIRED TO DESIGN AND BUILD THE SYSTEMS*** AS WELL AS PROVIDE SERVICES TO INCLUDE THE PREPARATION OF DRAWINGS AS REQUIRED FOR PERMIT FROM THE AUTHORITY HAVING JURISDICTION OVER THE PROJECT FOR REVIEW & APPROVAL. ***THE DEFERRED SUBMITTAL ITEMS SHALL NOT BE INSTALLED UNTIL THE DESIGN AND SUBMITTAL DOCUMENTS HAVE BEEN APPROVED BY THE OFFICE OF THE STATE FIRE MARSHAL.***

DEFERRED SUBMITTAL SHALL INCLUDE COMPREHENSIVE ENGINEERING ANALYSIS BY A CA LICENSED PROFESSIONAL FIRE PROTECTION ENGINEER, USING PERFORMANCE REQUIREMENTS AND DESIGN CRITERIA INDICATED ON THESE DRAWINGS AND THE CONTENTS OF SECTION 21 10 00. SUBMITTAL SHALL INCLUDE COMPLETE HYDRAULIC CALCULATIONS AND CUTSHEETS FOR MATERIALS AND PRODUCTS USED IN THE SYSTEM.

GENERAL NOTES

THE INSTALLING CONTRACTOR SHALL IDENTIFY A HYDRAULICALLY DESIGNED SPRINKLER SYSTEM WITH A PERMANENTLY MARKED WEATHERPROOF METAL OR RIGID PLASTIC SIGN, SECURE WITH CORROSION-RESISTANT WIRE, CHAIN, OR OTHER APPROVED MEANS. SUCH SIGNS SHALL BE PLACED AT THE ALARM VALVE, DRY PIPE VALVE, PREACTION VALVE, OR DELUGE VALVE SUPPLYING THE CORRESPONDING HYDRAULICALLY DESIGNED AREA.
THE AREA SHALL INCLUDE THE FOLLOWING INFORMATION:
a. LOCATION OF THE DESIGN AREA OR AREAS.
b. DISCHARGE DENSITIES OVER THE DESIGN AREA OR AREAS
c. REQUIRED FLOW AND RESIDUAL PRESSURE DEMAND AT THE BASE OF THE RISER
d. HOSE STREAM DEMAND INCLUDED IN ADDITION TO THE SPRINKLER DEMAND (2016 EDITION OF NFPA 13, SECTION 28.5 & 28.6)

THE AUTOMATIC FIRE SPRINKLER SYSTEM SHALL CONFORM TO THE REQUIREMENTS OF NFPA 13, 2016 ED. INSTALLATION OF THE FIRE SPRINKLER SYSTEM SHALL NOT BE STARTED UNTIL COMPLETE PLANS AND SPECIFICATIONS (INCLUDING WATER SUPPLY INFORMATION AND TYPE OF SYSTEM, IF ANY) HAVE BEEN APPROVED BY THE STATE FIRE MARSHAL. AT VARIOUS STAGES AND UPON COMPLETION, THE SYSTEM SHALL BE TESTED IN THE PRESENCE OF THE STATE FIRE MARSHAL AND THE INSPECTOR OF RECORD.

PROVIDE FIRESTOPPING DESIGN AND DETAILS SHOWING THE REQUIRED CLEARANCES AND FLEXIBLE FIRE-STOP SYSTEM/SEALANT WHERE SPRINKLER PIPING PENETRATES RATED WALLS WHERE OPENINGS ARE REQUIRED TO BE PROTECTED (2019 CBC SECTION 714)

A CABINET WITH A STOCK OF SPARE SPRINKLERS AND SPECIAL SPRINKLER WRENCH SHALL BE PROVIDED. LOCATION OF THE CABINET, NUMBER AND TYPE OF SPRINKLERS SHALL CONFORM TO NFPA 13 2016 ED, SECTION 16.2.7.3.

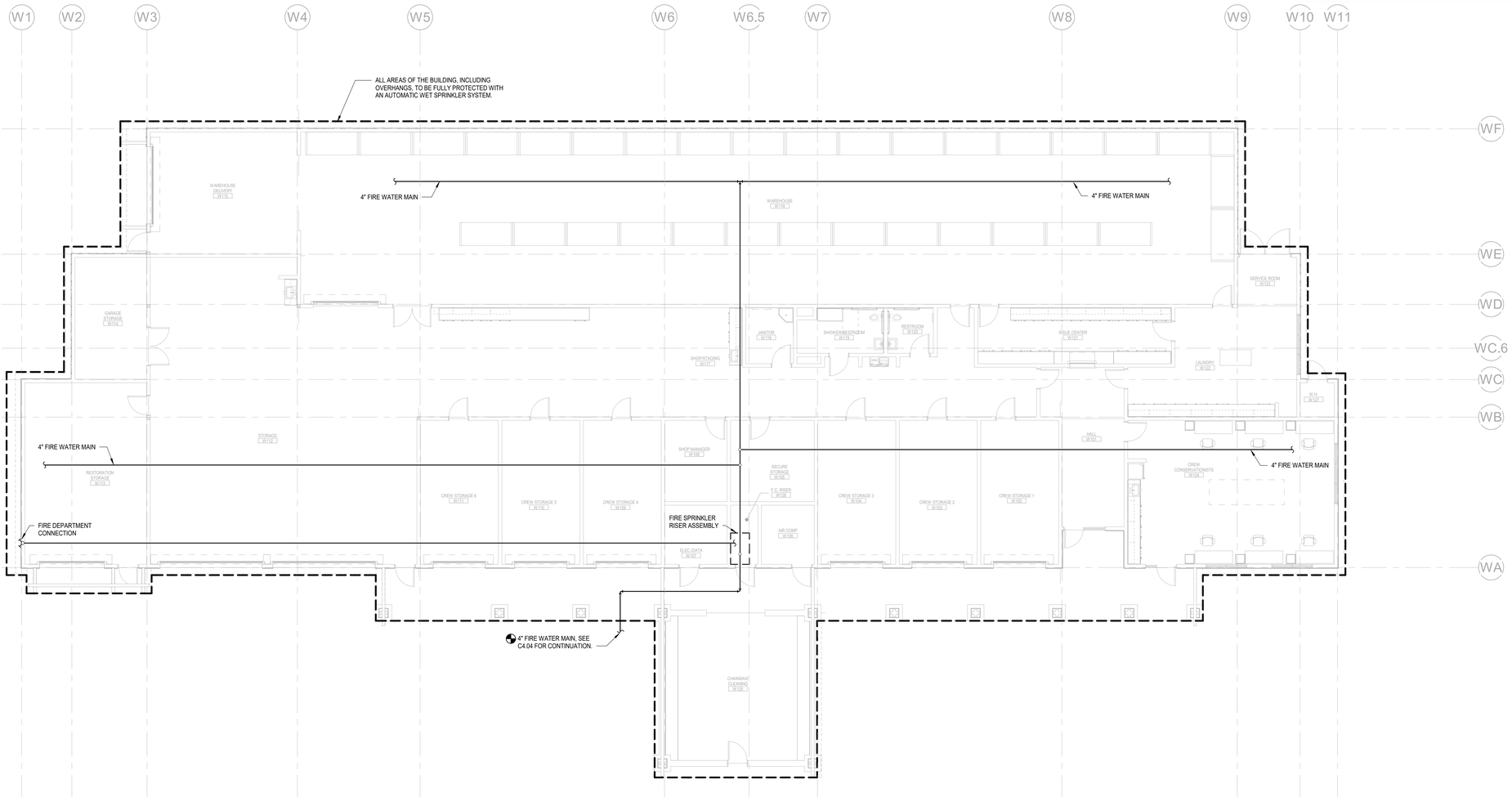

1 FP201W — WAREHOUSE BLDG FIRE PROTECTION FLOOR PLAN

SCALE: 1/8" = 1'-0"

SCHEMATIC FOR REFERENCE ONLY

IDENTIFICATION STAMP
DIV. OF THE STATE ARCHITECT
APP: 02-118630 INC:
REVIEWED FOR
SS ☐ FLS ☐ ACS ☑
DATE: 04/13/2021

OFFICE OF THE STATE FIRE MARSHAL
APPROVED FIRE AND PANIC ONLY
Approval of this plan does not authorize or approve any omission or deviation from applicable regulations. Final approval is subject to field inspection. One set of approved plans shall be available on the project site at all times.
PERMIT NO. 20-N-2332-CP
REVIEWED BY: LEO CATAYLO, OSFM
DATE: 4 / /2021

GENERAL SERVICES
Department of General Services
State of California
Real Estate Services Division
Project Management & Development Branch
707 Third Street, Suite 4-105
West Sacramento, California 95605

NICHOLS MELBURG & ROSSETTO ARCHITECTS + ENGINEERS
300 Knollcrest Drive
Redding, CA. 96002
(530) 222-3300 (530) 222-3538 FAX
http://www.nmrdesign.com

Copyright © 2019
All ideas, designs, arrangements and plans indicated or represented by this drawing are owned by, and the property of, NICHOLS, MELBURG and ROSSETTO and were created, evolved and developed for use on, and in conjunction with, the specified project. None of such ideas, designs, arrangements or plans shall be used by, or disclosed to any person, firm or corporation for any purpose whatsoever without the written permission of NICHOLS, MELBURG and ROSSETTO

LICENSE STAMPS

REGISTERED PROFESSIONAL ENGINEER — KENT D. DAVIS — M 33498 — EXPIRES 9/30/22 — MECHANICAL — STATE OF CALIFORNIA

DATE SIGNED: 10-20-20

CONSULTANT

CAPITAL ENGINEERING CONSULTANTS, INC.
RANCHO CORDOVA, CALIFORNIA
JD - HCUH — PM - DESIGN TEAM
181205.00 — PROJECT NO.

DRAWING STATUS
CONSTRUCTION DOCUMENTS

ISSUE

No.	Date	Description
1	10/22/2020	INITIAL PLAN REVIEW
2	01/22/2021	AGENCY RESUBMITTAL
3	03/22/2021	AGENCY RESUBMITTAL

If drawing is not 30" x 42" it is a reduced print

PROJECT
RESIDENTIAL CENTER, UKIAH: REPLACEMENT OF EXISTING RESIDENTIAL CENTER
440 EAST HILL ROAD
WILLITS, CALIFORNIA 95490
MENDOCINO COUNTY
CALIFORNIA CONSERVATION CORP

Supervisor	Designed	Drawn
		Author

DSA Application No.
02-118630

SHEET TITLE
WAREHOUSE BLDG FIRE PROTECTION FLOOR PLAN

DGS Project Number: 0000000000001826
NMR Project Number: 18-6456

Reference North: NORTH
Sheet Scale: 1/8" = 1'-0"
Sheet Number: FP201W

ISSUE DATE
July 9, 2021

Plot Date: 3/19/2021 1:09:55 PM
File Name: J:\Revit Local Files\ECI_DGS CCC Willits_Warehouse_MP18_Central_jduvall\KTH47.rvt

IDENTIFICATION STAMP
DIV. OF THE STATE ARCHITECT
APP: 02-118630 INC:
REVIEWED FOR
SS ☐ FLS ☐ ACS ☑
DATE: 04/13/2021

OFFICE OF THE STATE FIRE MARSHAL
APPROVED FIRE AND PANIC ONLY
Approval of this plan does not authorize or approve any omission or deviation from applicable regulations. Final approval is subject to field inspection. One set of approved plans shall be available on the project site at all times.
PERMIT NO.: 20-N-2332-CP
REVIEWED BY: LITO CATAYLO, OSFM
DATE: 3/1/2021

GENERAL SERVICES
Department of General Services
State of California
Real Estate Services Division
Project Management & Development Branch
707 Third Street, Suite 4-105
West Sacramento, California 95605

NICHOLS MELBURG & ROSSETTO
ARCHITECTS + ENGINEERS
300 Knollcrest Drive
Redding, CA. 96002
(530) 222-3300 (530) 222-3538 FAX
http://www.nmrdesign.com

Copyright © 2020
All ideas, designs, arrangements and plans indicated or represented by this drawing are owned by, and the property of, NICHOLS, MELBURG and ROSSETTO and were created, evolved and developed for use on, and in conjunction with, the specified project. None of such ideas, designs, arrangements or plans shall be used by, or disclosed to any person, firm or corporation for any purpose whatsoever without the written permission of NICHOLS, MELBURG and ROSSETTO.

LICENSE STAMPS

LICENSED ARCHITECT KYLE MATTI C-27504 REN. 10/31/21 STATE OF CALIFORNIA

CONSULTANT

ARCHITECT	**ASSOCIATE ARCHITECT**	**LANDSCAPE ARCHITECT**	**STRUCTURAL ENGINEER**	**CIVIL ENGINEER**	**MECHANICAL ENGINEER**	**ELECTRICAL ENGINEER**	**FOOD SERVICE**
NICHOLS, MELBURG & ROSSETTO 300 Knollcrest Drive Redding, CA 96002 (530) 222-3300 PHONE (530) 222-3538 FAX	LIONAKIS 1919 Nineteenth Street Sacramento, CA 95811 (916) 558-1900 PHONE (916) 558-1919 FAX	MICHAEL LANDER ASLA 20270 Lupine Drive Redding, CA 96002 (530) 223-2488 PHONE	LIONAKIS 1919 Nineteenth Street Sacramento, CA 95811 (916) 558-1900 PHONE (916) 558-1919 FAX	BKF ENGINEERING 200 Fourth Street, Suite 300 Santa Rosa, CA 95401 (707) 583-8530 PHONE (707) 583-8539 FAX	CAPITAL ENGINEERING CONSULTANTS, INC. 11020 Sun Center Drive, Suite 100 Rancho Cordova, CA 95670 (916) 851-3500 PHONE	TK1SC 15231 Laguna Canyon Road, Suite 100 Irvine, CA 92618 (949) 751-5800 PHONE (949) 751-5811 FAX	THE MARSHALL ASSOCIATES 240 3rd Street, Suite 2-B Oakland, CA 94607 (415) 677-1200 PHONE (415) 677-1210 FAX

STANDARDS

ALL CONTRACTORS PERFORMING WORK ON THIS PROJECT SHALL COMPLY WITH THE REQUIREMENTS OF 2019 CFC CHAPTER 11, 33 AND NFPA 241 FIRE-PREVENTION PROGRAM THROUGHOUT ALL PHASES OF CONSTRUCTION.

APPLICABLE STANDARDS:

ALL WORK PERFORMED & PRODUCTS FURNISHED SHALL COMPLY AS APPLICABLE WITH THE LATEST REGULATIONS OF:

- 2016 NFPA 13 AUTOMATIC SPRINKLER SYSTEMS (CALIFORNIA AMENDED)
- 2016 NFPA 14 INSTALLATION OF STANDPIPE AND HOSE SYSTEMS (CALIFORNIA AMENDED)
- NFPA 17A, STANDARD FOR WET CHEMICAL EXTINGUISHING SYSTEMS
- 2016 NFPA 20, PUMPS FOR FIRE PROTECTION
- 2016 NFPA 24, FIRE SERVICE MAINS (CALIFORNIA AMENDED)
- 2013 NFPA 25, INSPECTION, TESTING & MAINTENANCE OF WATER-BASED FIRE PROTECTION SYSTEMS (CALIFORNIA AMENDED)
- 2018 NFPA 30, FLAMMABLE AND COMBUSTIBLE LIQUIDS CODE
- 2018 NFPA 30A, MOTOR FUEL DISPENSING FACILITIES AND REPAIR GARAGES
- 2017 NFPA 58, LIQUIFIED PETROLEUM GAS CODE
- 2016 NFPA 72 NATIONAL FIRE ALARM CODE (CALIFORNIA AMENDED)
- 2016 NFPA 80, STANDARD FOR FIRE DOORS AND OTHER OPENING PROTECTIVES
- 2012 UL 305, STANDARD FOR PANIC HARDWARE
- 2003 UL 464, AUDIBLE SIGNAL APPLIANCES
- 1997 UL 2085, STANDARD FOR PROTECTED ABOVE-GROUND TANKS FOR FLAMMABLE AND COMBUSTIBLE LIQUIDS

AGENCY REVIEW

DIVISION OF THE STATE ARCHITECT (DSA) REVIEW IS LIMITED TO ACCESSIBILITY COMPLIANCE FOR THIS PROJECT. FIRE/LIFE SAFETY SHALL BE REVIEWED BY THE CALIFORNIA STATE FIRE MARSHAL (CSFM/SFM).

CALIFORNIA STATE FIRE MARSHAL AND THE DIVISION OF THE STATE ARCHITECT - ACCESSIBILITY COMPLIANCE SECTION SHALL REVIEW AND APPROVE SCOPE OF PROPOSED CHANGES PRIOR TO INSTALLATION OR IMPLEMENTATION OF WORK IN THE FIELD.

GRADING PLANS, DRAINAGE IMPROVEMENTS, ROAD AND ACCESS REQUIREMENTS AND ENVIRONMENTAL HEALTH CONSIDERATIONS SHALL COMPLY WITH ALL LOCAL ORDINANCES.

DEFERRED SUBMITTALS

ALL DEFERRED SUBMITTALS SHALL FIRST BE SUBMITTED TO THE REGISTERED DESIGN PROFESSIONAL WHO SHALL REVIEW THEM AND FORWARD THEM TO THE APPROPRIATE AGENCY, AS NOTED BELOW IN PARENTHESIS, WITH A NOTATION INDICATING THAT THE DEFERRED SUBMITTAL DOCUMENTS HAVE BEEN REVIEWED AND FOUND TO BE IN GENERAL CONFORMANCE WITH THE DESIGN OF THE BUILDING. THE DEFERRED SUBMITTAL ITEMS SHALL NOT BE INSTALLED UNTIL THE DEFERRED SUBMITTAL DOCUMENTS HAVE BEEN APPROVED BY THE BUILDING OFFICIAL. CBC 107.3.4.2

- FIRE SUPPRESSION SYSTEM (DEFERRED FIRE PROTECTION APPROVAL)
- KITCHEN HOOD FIRE SUPPRESSION SYSTEM (DEFERRED FIRE PROTECTION APPROVAL)
- HAZMAT STORAGE STRUCTURE DRY CHEMICAL FIRE SUPPRESSION SYSTEM (DEFERRED FIRE PROTECTION APPROVAL)

CONTRACTOR SHALL OBTAIN APPROVAL OF FIRE SPRINKLER AND FIRE ALARM SYSTEMS FROM THE OFFICE OF THE STATE FIRE MARSHAL PRIOR TO SUBMISSION OF SUBMITTAL TO THE DESIGN ARCHITECT. SEND SUBMITTAL TO:

OFFICE OF THE STATE FIRE MARSHAL
FIRE & LIFE SAFETY DIVISION
2251 HARVARD STREET, SUITE 130
SACRAMENTO, CA 95815
(916) 568-2957

SUBMITTAL DOCUMENTS SHALL INCLUDE THE FOLLOWING INFORMATION:
PROJECT NAME: RESIDENTIAL CENTER, UKIAH: REPLACEMENT OF EXISTING RESIDENTIAL CENTER
PROJECT NUMBER: 000000000001826

CALIFORNIA STATE FIRE MARSHAL (CSFM) FILE #: SEE LIST ON THIS SHEET
DEFERRED APPROVALS (CSFM):

1 - AUTOMATIC FIRE SPRINKLER SYSTEM
2 - KITCHEN HOOD AND DUCT FIRE SUPPRESSION SYSTEM
3 - FIRE ALARM SYSTEM FABRICATION (SHOP DRAWINGS)

SUBMITTALS SHALL INCLUDED APPLICABLE DRAWINGS, DETAILS, NOTES, ELEMENTS, PRODUCT INFORMATION, ETC. SHOP DRAWINGS SHALL BE SIGNED & SEALED BY THE LICENSED C-10 OR C-16 CONTRACTOR/INSTALLER FOR FIRE ALARM & FIRE SUPPRESSION SYSTEMS.

VICINITY MAP

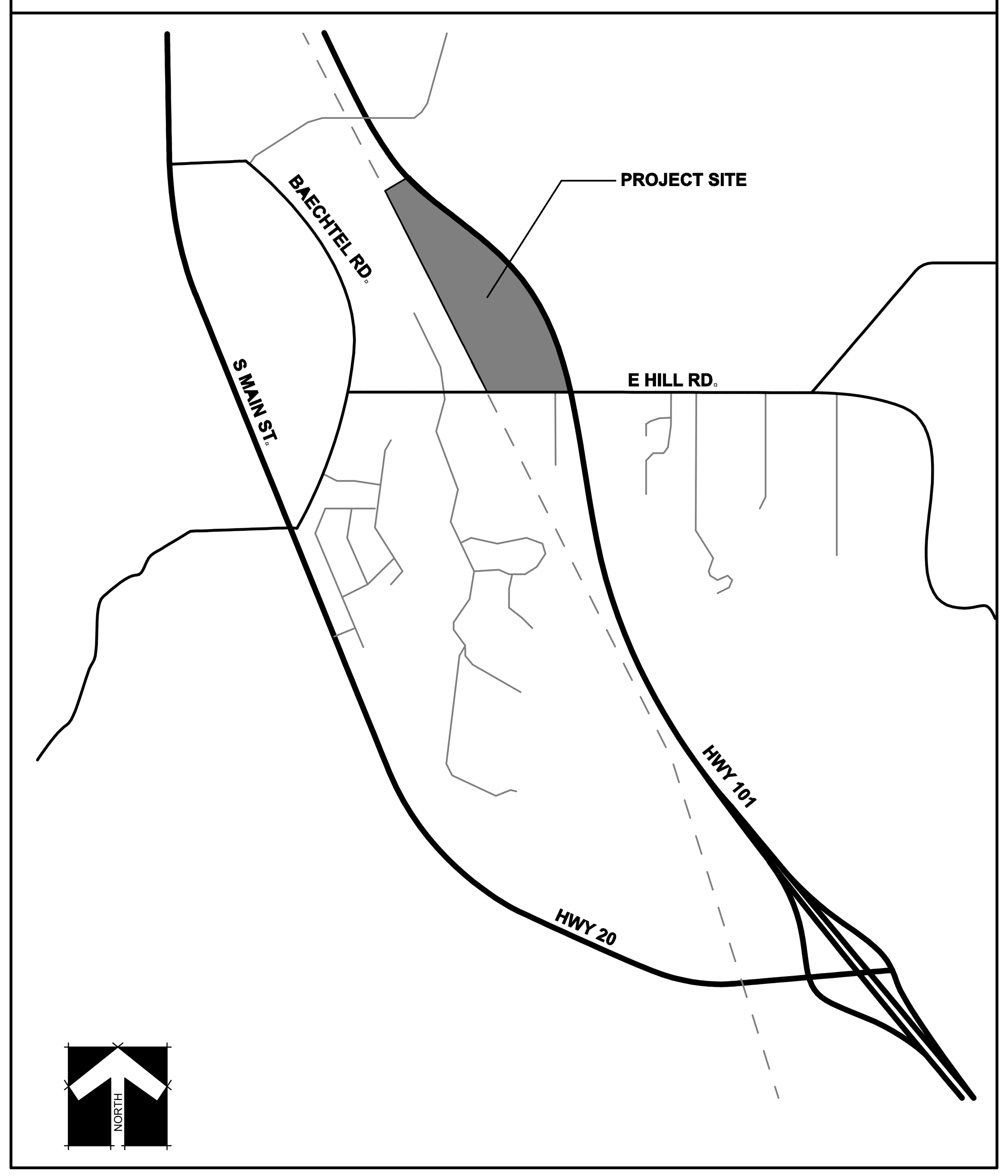

CODES

APPLICABLE CODES:
ALL WORK PERFORMED & PRODUCTS FURNISHED SHALL COMPLY AS APPLICABLE WITH THE LATEST REGULATIONS OF:

- 2019 CALIFORNIA BUILDING STANDARDS ADMINISTRATIVE CODE, PART 1, TITLE 24 C.C.R.
- 2019 CALIFORNIA BUILDING CODE (CBC), PART 2, TITLE 24 C.C.R.
- 2019 CALIFORNIA ELECTRICAL CODE (CEC), PART 3, TITLE 24 C.C.R.
- 2019 CALIFORNIA MECHANICAL CODE (CMC), PART 4, TITLE 24 C.C.R.
- 2019 CALIFORNIA PLUMBING CODE (CPC), PART 5, TITLE 24 C.C.R.
- 2019 CALIFORNIA ENERGY CODE, PART 6, TITLE 24 C.C.R.
- 2019 CALIFORNIA FIRE CODE, PART 9, TITLE 24 C.C.R.
- 2019 CALIFORNIA EXISTING BUILDING CODE, PART 10, TITLE 24 C.C.R.
- 2019 CALIFORNIA GREEN BUILDING STANDARDS CODE, PART 11, TITLE 24 C.C.R.
- 2019 CALIFORNIA REFERENCED STANDARDS CODE, PART 12, TITLE 24 C.C.R.
- TITLE 19 CALIFORNIA CODE OF REGULATIONS - PUBLIC SAFETY, DIVISION 1 STATE FIRE MARSHAL
- ASME BPVC (BOILER AND PRESSURE VESSEL CODE) SECTION VIII, DIVISION 1
- 2019 CALIFORNIA CODE OF REGULATIONS TITLE 8, CHAPTER 4, SUBCHAPTER 1 (UNIFIED PRESSURE VESSEL SAFETY ORDERS)

DGS# 1826
CSFM# SEE BELOW

<u>ADMINISTRATION BUILDING & SITE</u> - 20-N-2332-CP
<u>COMET BUILDING</u> - 21-N-0197-CP
<u>EDUCATION BUILDING</u> - 21-N-0198-CP
<u>MENS HOUSING 1</u> - 21-N-0199-CP
<u>MENS HOUSING 2</u> - 21-N-0200-CP
<u>MENS HOUSING 3</u> - 21-N-0201-CP
<u>WOMENS HOUSING 4</u> - 21-N-0202-CP
<u>WOMENS HOUSING 5</u> - 21-N-0203-CP
<u>WOMENS HOUSING 6</u> - 21-N-0204-CP
<u>MULTI-PURPOSE BUILDING</u> - 21-N-0205-CP
<u>RECREATION BUILDING</u> - 21-N-0206-CP
<u>WAREHOUSE BUILDING</u> - 21-N-0207-CP

NOTE: SEE SHEETS G100 & G101 FOR CLARIFICATION OF WHICH BUILDING EACH APPLICATION NUMBER PERTAINS TO

PROJECT NARRATIVE

THE PROJECT WILL CONSTRUCT A NEW CCC RESIDENTIAL CENTER IN WILLITS, CA THAT WILL CONSIST OF 66,728 TOTAL SQUARE FEET (SF). THIS RESIDENTIAL CENTER WILL INCLUDE TWELVE BUILDINGS CONSISTING OF AN ADMINISTRATION BUILDING, SEVEN DORMITORIES, AN EDUCATION BUILDING, A RECREATION BUILDING, A MULTI-PURPOSE WITH KITCHEN AND DINING ROOM WAREHOUSE WITH WORK AREA AND A HAZARDOUS MATERIALS STORAGE STRUCTURE. THE SITE WILL INCLUDE ASPHALT PAVED SURFACES FOR DRIVEWAYS AND PARKING AND CONCRETE PAVING FOR SERVICE AND STAGING AREAS AND WALKWAYS. THE FACILITY IS TO BE DESIGNED BASED ON THE PROTOTYPE AND CCC'S RESIDENTIAL NEEDS TO HOUSE 120 PERMANENT CORPS MEMBERS. THE FACILITY IS INTENDED TO BE DESIGNED TO ZERO NET ENERGY (ZNE) PER THE GOVERNOR'S EXECUTIVE ORDER B-18-12 AND ACHIEVE AT MINIMUM A LEADERSHIP IN ENERGY AND ENVIRONMENTAL DESIGN (LEED) SILVER CERTIFICATION.

PROJECT DATA

ASSESSOR'S PARCEL NUMBER: 007-100-28 & 007-180-18

ZONING: HEAVY INDUSTRIAL & INDUSTRIAL PARK

PROJECT STREET ADDRESS: 440 EAST HILL ROAD, WILLITS, CA 95490

PARCEL AREA: 26.7 ACRES

TOTAL BUILDING CONDITIONED FLOOR AREA: 66,728 S.F.

ADMIN.	3,529 SQ. FT.
COMET	3,233 SQ. FT.
MEN'S HOUSING	(3) AT 3,005 SQ. FT EACH
WOMEN'S HOUSING	(3) AT 3,005 SQ. FT. EACH
EDUCATION	6,155 SQ. FT.
MULTIPURPOSE	16,244 SQ. FT.
RECREATION	5,834 SQ. FT.
WAREHOUSE	13,703 SQ. FT.

REQUIRED MINIMUM SETBACKS: FRONT AND REAR – 20 FEET; SIDE YARD – 10 FEET; STREET RIGHT OF WAY AT EAST HILL ROAD – 30 FEET

WILDLAND URBAN INTERFACE: SITE IS LOCATED WITHIN A LOCAL RESPONSIBILITY AREA (LITTLE LAKE FIRE PROTECTION DISTRICT) AND IS DESIGNATED A MODERATE RISK (CBC CHAPTER 7A IS NOT APPLICABLE)

DRAWING STATUS
CONSTRUCTION DOCUMENTS

ISSUE

No.	Date	Description
1	10/20/2020	INITIAL PLAN REVIEW
2	01/22/2021	AGENCY RESUBMITTAL
3	03/22/2021	AGENCY RESUBMITTAL

If drawing is not 30" x 42" it is a reduced print

PROJECT
RESIDENTIAL CENTER, UKIAH: REPLACEMENT OF EXISTING RESIDENTIAL CENTER
440 EAST HILL ROAD
WILLITS, CALIFORNIA 95490
MENDOCINO COUNTY
CALIFORNIA CONSERVATION CORP

Supervisor	Designed	Drawn
KJM	DMH	AMP

DSA Application No.
02-118630

SHEET TITLE
COVER SHEET
VOLUME III

DGS Project Number 000000000001826
NMR Project Number 18-6456

Reference North: NORTH
Sheet Scale
Sheet Number G001

ISSUE DATE
July 9, 2021

Plot Date: 3/23/2021 4:55:29 PM
File Name: BIM 360://CCC Willits Residential Center/A_CCC-WRC-COMMON.rvt

SHEET INDEX

VOLUME I

GENERAL

G001	COVER SHEET VOLUME I
G002	SHEET INDEX
G003	GENERAL NOTES AND ABBREVIATIONS
G010	CALGREEN CHECKLIST
G011	CALGREEN CHECKLIST
G012	CALGREEN CHECKLIST
G100	SITE CODE ANALYSIS & ACCESSIBILITY PLAN - SOUTH
G101	SITE CODE ANALYSIS & ACCESSIBILITY PLAN - NORTH
G110	LIFE SAFETY PLAN - ADMIN & WAREHOUSE BUILDINGS
G111	LIFE SAFETY PLAN - COMET & HOUSING BUILDINGS
G112	LIFE SAFETY PLAN - EDUCATION & RECREATION BUILDINGS
G113	LIFE SAFETY PLAN - MULTI-PURPOSE BUILDING
G120	CEILING, ROOF, & FLOOR ASSEMBLIES
G121	WALL ASSEMBLIES
G130	ASSEMBLY PENETRATIONS
G210	ACCESSIBILITY DETAILS - SITE AND PARKING
G212	ACCESSIBILITY DETAILS
G213	ACCESSIBILITY DETAILS
G300	SIGNAGE PLANS - ADMIN & WAREHOUSE BUILDINGS
G301	SIGNAGE PLANS - COMET, HOUSING, EDUCATION & RECREATION BLDGS
G302	SIGNAGE PLAN - MULTI-PURPOSE BUILDINGS
G400	WETLANDS PROTECTION SITE PLAN

CIVIL

C0.01	NOTES, LEGEND AND ABBREVIATIONS
C0.02	KEY MAP
C1.01	DEMOLITION PLAN (NORTH)
C1.02	DEMOLITION PLAN (SOUTH)
C2.00	PLAN & PROFILE EAST HILL ROAD
C2.01	PLAN & PROFILE ROAD "A"
C2.02	PLAN & PROFILE ROAD "A"
C2.03	PLAN & PROFILE ROAD "B"
C2.04	PLAN & PROFILE ROAD "B"
C2.05	PLAN & PROFILE ROAD "C"
C2.06	PLAN & PROFILE ROAD "C"
C2.07	PLAN & PROFILE BRIDGE ROAD
C2.08	CROSS SECTIONS ROAD "A"
C2.09	CROSS SECTIONS ROAD "B"
C2.10	CROSS SECTIONS ROAD "C"
C2.11	CROSS SECTIONS BRIDGE ROAD
C3.01	GRADING PLAN HOUSING AREA
C3.02	GRADING PLAN RECREATION AREA
C3.03	GRADING PLAN ADMIN AND PARKING
C3.04	GRADING PLAN WAREHOUSE, STORAGE AND PARKING AREA
C3.05	GRADING PLAN CREW STAGING AREA
C3.06	GRADING PLAN SOLAR AREA AND EXERCISE TRAIL
C4.01	UTILITY PLAN HOUSING AREA
C4.02	UTILITY PLAN RECREATION AREA
C4.03	UTILITY PLAN ADMIN AND PARKING
C4.04	UTILITY PLAN WAREHOUSE, STORAGE AND PARKING AREA
C4.05	UTILITY PLAN CREW STAGING AREA
C4.06	UTILITY PLAN SOLAR AREA AND EXERCISE TRAIL
C4.07	UTILITY PLAN STORMDRAIN PROFILES
C4.08	UTILITY PLAN SEWER LIFT STATION
C5.01	STRIPING PLAN RECREATION AREA
C5.02	STRIPING PLAN ADMIN AND PARKING
C5.03	STRIPING PLAN WAREHOUSE, STORAGE AND PARKING AREA
C6.01	CIVIL CONSTRUCTION DETAILS & SECTIONS
C6.02	CIVIL CONSTRUCTION DETAILS
C6.03	STANDARD DETAILS
C6.04	STANDARD DETAILS
C7.01	EROSION & SEDIMENT CONTROL PLAN (NORTH)
C7.02	EROSION & SEDIMENT CONTROL PLAN (SOUTH)

LANDSCAPE

L1	PLANTING SCHEDULE
L2	PLANTING PLAN
L3	PLANTING PLAN
L4	PLANTING PLAN
L5	IRRIGATION SCHEDULE
L6	IRRIGATION PLAN
L7	IRRIGATION PLAN
L8	IRRIGATION PLAN
L9	IRRIGATION DETAILS
L10	MITIGATION WETLAND PLANTING PLAN

ARCHITECTURAL SITE

A010	OVERALL SITE PLAN
A020	SITE PLAN - SOUTH
A021	SITE PLAN - NORTH
A030	ENLARGED SITE PLAN - SOUTHEAST
A031	ENLARGED SITE PLAN - SOUTHWEST
A032	ENLARGED SITE PLAN - EAST
A033	ENLARGED SITE PLAN - WEST
A034	ENLARGED SITE PLAN - NORTH
A035	ENLARGED SITE PLAN - PV ARRAY
A050	PARTIAL SITE PLANS
A051	PARTIAL SITE PLANS
A060	SITE DETAILS
A061	SITE DETAILS
A062	SITE DETAILS
A063	SITE DETAILS
A064	SITE DETAILS

ARCHITECTURAL - ADMINISTRATION BUILDING

A201A	ADMINISTRATION FLOOR PLAN, DIMENSION PLAN
A221A	ADMINISTRATION ENLARGED FLOOR PLANS
A240A	ADMINISTRATION ROOF PLAN, REFLECTED CEILING PLAN
A300A	ADMINISTRATION EXTERIOR ELEVATIONS
A400A	ADMINISTRATION BUILDING SECTIONS
A401A	ADMINISTRATION BUILDING SECTIONS
A402A	ADMINISTRATION BUILDING SECTIONS
A403A	ADMINISTRATION BUILDING SECTIONS
A500A	ADMINISTRATION INTERIOR ELEVATIONS

ARCHITECTURAL - COMET BUILDING

A201C	COMET FLOOR PLAN, DIMENSION PLAN, ROOF PLAN, RCP
A220C	ENLARGED FLOOR PLAN
A300C	COMET EXTERIOR ELEVATIONS
A400C	COMET BUILDING SECTIONS
A401C	COMET BUILDING SECTIONS
A500C	COMET INTERIOR ELEVATIONS
A501C	COMET INTERIOR ELEVATIONS

ARCHITECTURAL - EDUCATION BUILDING

A201E	EDUCATION FLOOR PLAN, DIMENSION PLAN & ENLARGED PLANS
A211E	EDUCATION ROOF PLAN & REFLECTED CEILING PLAN
A300E	EDUCATION EXTERIOR ELEVATIONS
A400E	EDUCATION BUILDING SECTION
A401E	EDUCATION BUILDING SECTION
A402E	EDUCATION BUILIDING SECTION
A500E	EDUCATION INTERIOR ELEVATIONS

ARCHITECTURAL - HOUSING MEN (BLDG'S 1,2,3)

A201HM	MEN'S HOUSING FLOOR PLAN, DIMENSION PLAN, ROOF PLAN, RCP
A220HM	MEN'S HOUSING ENLARGED FLOOR PLAN
A300HM	MEN'S HOUSING EXTERIOR ELEVATIONS
A400HM	MEN'S HOUSING BUILDING SECTIONS
A401HM	MEN'S HOUSING BUILDING SECTIONS
A500HM	MEN'S HOUSING INTERIOR ELEVATIONS

ARCHITECTURAL-HOUSING WOMEN (BLGS 4,5,6)

A201HW	WOMEN'S HOUSING FLOOR PLAN, DIMENSION PLAN, ROOF PLAN, RCP
A220HW	WOMEN'S HOUSING ENLARGED FLOOR PLAN
A300HW	WOMEN'S HOUSING EXTERIOR ELEVATIONS
A400HW	WOMEN'S HOUSING BUILDING SECTIONS
A401HW	WOMEN'S HOUSING BUILDING SECTIONS
A500HW	WOMEN'S HOUSING INTERIOR ELEVATIONS

ARCHITECTURAL MULTI-PURPOSE BUILDING

A201M	MULTI-PURPOSE FLOOR PLAN
A210M	MULTI-PURPOSE DIMENSION PLAN
A220M	MULTI-PURPOSE ENLARGED PLAN
A230M	MULTI-PURPOSE BASKETBALL COURT STRIPING PLAN
A240M	MULTI-PURPOSE ROOF PLAN
A250M	MULTI-PURPOSE REFLECTED CEILING PLAN
A300M	MULTI-PURPOSE EXTERIOR ELEVATIONS
A301M	MULTI-PURPOSE EXTERIOR ELEVATIONS
A401M	MULTI-PURPOSE BUILDING SECTION
A402M	MULTI-PURPOSE BUILDING SECTION
A403M	MULTI-PURPOSE BUILDING SECTION
A404M	MULTI-PURPOSE BUILDING SECTION
A405M	MULTI-PURPOSE BUILDING SECTION
A406M	MULTI-PURPOSE BUILDING SECTION
A407M	MULTI-PURPOSE BUILDING SECTION
A408M	MULTI-PURPOSE BUILDING SECTION
A409M	MULTI-PURPOSE BUILDING SECTION
A410M	MULTI-PURPOSE BUILDING SECTION
A500M	MULTI-PURPOSE INTERIOR ELEVATIONS
A501M	MULTI-PURPOSE INTERIOR ELEVATIONS
A502M	MULTI-PURPOSE INTERIOR ELEVATIONS
A503M	MULTI-PURPOSE INTERIOR ELEVATIONS

ARCHITECTURAL - RECREATION BUILDING

A201R	RECREATION BLDG. FLOOR PLAN & DIMENSION PLAN & ENLARGED PLANS
A211R	RECREATION BLDG. ROOF PLAN & REFLECTED CEILING PLAN
A300R	RECREATION BLDG. EXTERIOR ELEVATIONS
A400R	RECREATION BLDG. BUILDING SECTIONS
A401R	RECREATION BLDG. BUILDING SECTIONS
A500R	RECREATION BLDG. INTERIOR ELEVATION
A501R	RECREATION BLDG. INTERIOR ELEVATION

ARCHITECTURAL - WAREHOUSE BUILDING

A201W	WAREHOUSE BLDG. FLOOR PLAN
A211W	WAREHOUSE BLDG. DIMENSION PLAN
A220W	WAREHOUSE BLDG ENLARGED FLOOR PLAN
A240W	WAREHOUSE BLDG. ROOF PLAN
A251W	WAREHOUSE BLDG. REFLECTED CEILING PLAN
A300W	WAREHOUSE BLDG. EXTERIOR ELEVATIONS
A301W	WAREHOUSE BLDG. EXTERIOR ELEVATIONS
A401W	WAREHOUSE BLDG. SECTIONS
A402W	WAREHOUSE BLDG. SECTIONS
A403W	WAREHOUSE BLDG. SECTIONS
A404W	WAREHOUSE BLDG. SECTIONS
A405W	WAREHOUSE BLDG. SECTIONS
A406W	WAREHOUSE BLDG. SECTIONS
A407W	WAREHOUSE BLDG. SECTIONS
A501W	WAREHOUSE BLDG. INTERIOR ELEVATIONS
A502W	WAREHOUSE BLDG. INTERIOR ELEVATIONS

ARCHITECTURAL - COMMON SHEETS

A710	DOOR SCHEDULE
A711	DOOR & FRAME TYPES
A712	DOOR & FRAME DETAILS
A713	DOOR & FRAME DETAILS
A720	WINDOW & LOUVER TYPES
A721	WINDOW & LOUVER DETAILS
A722	WINDOW & LOUVER DETAILS
A800	EXTERIOR DETAILS - BUILDING ENVELOPE
A810	EXTERIOR DETAILS - ROOFING
A811	EXTERIOR DETAILS - ROOFING
A820	EXTERIOR DETAILS - MISCELLANEOUS
A900	FINISH SCHEDULE
A901	FINISH SCHEDULE
A902	FINISH SCHEDULE
A930	INTERIOR DETAILS - CEILINGS
A931	INTERIOR DETAILS - CEILINGS
A940	INTERIOR DETAILS - CASEWORK DETAILS
A960	INTERIOR DETAILS - MISCELLANEOUS
A961	INTERIOR DETAILS - MISCELLANEOUS
A965	INTERIOR DETAILS - SIGNAGE DETAILS
A980	WALL PROTECTION

INTERIOR DESIGN

ID201	FINISH FLOOR PLAN - ADMIN & WAREHOUSE BUILDING
ID202	FINISH FLOOR PLAN - COMET & HOUSING BUILDINGS
ID203	FINISH FLOOR PLAN - EDUCATION & RECREATION BUILDING
ID204	FINISH FLOOR PLAN - MULTI-PURPOSE BUILDING

VOLUME II

GENERAL

G001	COVER SHEET VOLUME II
G002	SHEET INDEX

STRUCTURAL

S001	GENERAL NOTES
S011	TYPICAL NOTES
S012	TYPICAL NOTES
S013	TYPICAL NOTES
S201A	ADMINISTRATION FOUNDATION PLAN
S202A	ADMINISTRATION ROOF FRAMING PLAN
S211A	ADMINISTRATION 3D VIEWS
S401A	ADMINISTRATION STRUCTURAL BUILDING SECTIONS
S402A	ADMINISTRATION STRUCTURAL BUILDING SECTIONS
S201C	COMET FOUNDATION PLAN
S202C	COMET ROOF FRAMING PLAN
S211C	COMET 3D VIEWS
S401C	COMET STRUCTURAL BUILDING SECTIONS
S201E	EDUCATION FOUNDATION PLAN
S202E	EDUCATION ROOF FRAMING PLAN
S211E	EDUCATION 3D VIEWS
S401E	EDUCATION STRUCTURAL BUILDING SECTIONS
S402E	EDUCATION STRUCTURAL BUILDING SECTIONS
S201HM	MEN'S HOUSING FOUNDATION PLAN
S202HM	MEN'S HOUSING ROOF FRAMING PLAN
S211HM	MEN'S HOUSING 3D VIEWS
S401HM	MEN'S HOUSING STRUCTURAL BUILDING SECTIONS
S201HW	WOMEN'S HOUSING FOUNDATION PLAN
S202HW	WOMEN'S HOUSING ROOF FRAMING PLAN
S211HW	WOMEN'S HOUSING 3D VIEWS
S401HW	WOMEN'S HOUSING STRUCTURAL BUILDING SECTIONS
S201M	MULTI-PURPOSE FOUNDATION PLAN
S202M	MULTI-PURPOSE ROOF FRAMING PLAN
S203M	MULTI-PURPOSE ROOF COLLECTOR/STRAP/SP NAILING PLAN
S211M	MULTI-PURPOSE 3D VIEWS
S401M	MULTI-PURPOSE STRUCTURAL BUILDING SECTIONS
S402M	MULTI-PURPOSE STRUCTURAL BUILDING SECTIONS
S403M	MULTI-PURPOSE STRUCTURAL BUILDING SECTIONS
S404M	MULTI-PURPOSE STRUCTURAL BUILDING SECTIONS
S201R	RECREATION FOUNDATION PLAN
S202R	RECREATION ROOF FRAMING PLAN
S211R	RECREATION 3D VIEWS
S401R	RECREATION STRUCTURAL BUILDING SECTIONS
S402R	RECREATION STRUCTURAL BUILDING SECTIONS
S201W	WAREHOUSE FOUNDATION PLAN
S202W	WAREHOUSE ROOF FRAMING PLAN
S211W	WAREHOUSE 3D VIEWS
S401W	WAREHOUSE STRUCTURAL BUILDING SECTIONS
S402W	WAREHOUSE STRUCTURAL BUILDING SECTIONS
S531	DETAILS - TYPICAL CONCRETE
S532	DETAILS - TYPICAL CONCRETE
S551	DETAILS - STRUCTURAL STEEL
S561	DETAILS - TYPICAL WOOD FRAMING
S562	DETAILS - TYPICAL WOOD FRAMING
S563	DETAILS - TYPICAL WOOD SHEAR WALL FRAMING
S564	DETAILS - TYPICAL WOOD TRUSS FRAMING
S565	DETAILS - TYPICAL MANUFACTURED LUMBER FRAMING
S566	DETAILS - WOOD FRAMING
S567	DETAILS - WOOD FRAMING
S568	DETAILS - WOOD FRAMING
S569	DETAILS - WOOD FRAMING
S570	DETAILS - WOOD FRAMING
S571	DETAILS - WOOD FRAMING
S701	CLT AND GLB TRUSS DETAILS
S702	DETAILS
S703	DETAILS - WOOD FRAMING

MECHANICAL

M001	HVAC LEGENDS & NOTES
M002	HVAC SCHEDULES
M003	HVAC SCHEDULES
M101A	ADMINISTRATION BLDG HVAC ZONE PLAN
M201A	ADMINISTRATION BLDG HVAC FLOOR PLAN
M202A	ADMINISTRATION BLDG HVAC ROOF PLAN
M301A	ADMINISTRATION BLDG HVAC PIPING FLOOR PLAN
M401A	ADMINISTRATION BLDG TITLE 24 COMPLIANCE
M402A	ADMINISTRATION BLDG TITLE 24 COMPLIANCE
M403A	ADMINISTRATION BLDG TITLE 24 COMPLIANCE
M101C	COMET BLDG HVAC ZONE PLAN
M201C	COMET BLDG HVAC FLOOR PLAN
M202C	COMET BLDG HVAC PLENUM PLAN
M301C	COMET BLDG HVAC PIPING FLOOR PLAN
M401C	COMET BLDG TITLE 24 COMPLIANCE
M402C	COMET BLDG TITLE 24 COMPLIANCE
M403C	COMET BLDG TITLE 24 COMPLIANCE
M101E	EDUCATION BLDG HVAC ZONE PLAN
M201E	EDUCATION BLDG HVAC FLOOR PLAN
M202E	EDUCATION BLDG HVAC PLENUM PLAN
M301E	EDUCATION BLDG HVAC PIPING FLOOR PLAN
M401E	EDUCATION BLDG TITLE 24 COMPLIANCE
M402E	EDUCATION BLDG TITLE 24 COMPLIANCE
M101HM	MEN'S HOUSING HVAC ZONE PLAN
M201HM	MEN'S HOUSING HVAC FLOOR PLAN
M202HM	MEN'S HOUSING HVAC PLENUM PLAN
M301HM	MEN'S HOUSING HVAC PIPING FLOOR PLAN
M401HM	MEN'S HOUSING TITLE 24 COMPLIANCE
M402HM	MEN'S HOUSING TITLE 24 COMPLIANCE
M403HM	MEN'S HOUSING TITLE 24 COMPLIANCE
M101HW	WOMEN'S HOUSING HVAC ZONE PLAN
M201HW	WOMEN'S HOUSING HVAC FLOOR PLAN
M202HW	WOMEN'S HOUSING HVAC PLENUM PLAN
M301HW	WOMEN'S HOUSING HVAC PIPING FLOOR PLAN
M401HW	WOMEN'S HOUSING TITLE 24 HOUSING
M402HW	WOMEN'S HOUSING TITLE 24 HOUSING
M403HW	WOMEN'S HOUSING TITLE 24 HOUSING
M101M	MULTI-PURPOSE BLDG HVAC ZONE PLAN
M201M	MULTI-PURPOSE BLDG HVAC FLOOR PLAN
M202M	MULTI-PURPOSE BLDG HVAC ROOF PLAN
M301M	MULTI-PURPOSE BLDG HVAC PIPING FLOOR PLAN
M302M	MULTI-PURPOSE BLDG HVAC PIPING ROOF PLAN
M401M	MULTI-PURPOSE BLDG TITLE 24 COMPLIANCE
M402M	MULTI-PURPOSE BLDG TITLE 24 COMPLIANCE
M403M	MULTI-PURPOSE BLDG TITLE 24 COMPLIANCE
M404M	MULTI-PURPOSE BLDG TITLE 24 COMPLIANCE
M101R	RECREATION BLDG HVAC ZONE PLAN
M201R	RECREATION BLDG HVAC FLOOR PLAN
M202R	RECREATION BLDG HVAC PLENUM PLAN
M301R	RECREATION BLDG HVAC PIPING FLOOR PLAN
M401R	RECREATION BLDG TITLE 24 COMPLIANCE
M402R	RECREATION BLDG TITLE 24 COMPLIANCE
M101W	WAREHOUSE BLDG HVAC ZONE PLAN
M201W	WAREHOUSE BLDG HVAC FLOOR PLAN
M202W	WAREHOUSE BLDG HVAC PLENUM PLAN
M301W	WAREHOUSE BLDG HVAC PIPING FLOOR PLAN
M401W	WAREHOUSE BLDG TITLE 24 COMPLIANCE
M402W	WAREHOUSE BLDG TITLE 24 COMPLIANCE
M400	HVAC PIPING DIAGRAMS
M500	HVAC DETAILS
M501	HVAC DETAILS
M502	HVAC DETAILS
M600	HVAC CONTROLS
M601	HVAC CONTROLS
M602	HVAC CONTROLS
M603	HVAC CONTROLS
M604	HVAC CONTROLS

PLUMBING

P001	PLUMBING LEGENDS & NOTES
P002	PLUMBING SCHEDULES
P003	PLUMBING FIXTURE SCHEDULE
P101	PLUMBING SITE PLAN
P201A	ADMINISTRATION BLDG PLUMBING FLOOR PLAN
P202A	ADMINISTRATION BLDG PLUMBING ROOF PLAN
P201C	COMET BLDG PLUMBING FLOOR PLAN
P201E	EDUCATION BLDG PLUMBING FLOOR PLAN
P201HM	MEN'S HOUSING PLUMBING FLOOR PLAN
P201HW	WOMEN'S HOUSING PLUMBING FLOOR PLAN
P201M	MULTI-PURPOSE BLDG PLUMBING FLOOR PLAN
P202M	MULTI-PURPOSE BLDG PLUMBING ROOF PLAN
P401M	MULTI-PURPOSE PLUMBING ENLARGED FLOOR PLAN & CALCULATION
P402M	MULTI-PURPOSE BLDG PLUMBING ENLARGED FLOOR PLAN
P201R	RECREATION BLDG PLUMBING FLOOR PLAN
P202R	RECREATION BLDG PLUMBING ROOF PLAN
P201W	WAREHOUSE BLDG PLUMBING FLOOR PLAN
P500	PLUMBING DETAILS
P501	PLUMBING DETAILS

FIRE PROTECTION

FP001	FIRE PROTECTION LEGENDS, NOTES, & DETAILS
FP201A	ADMINISTRATION BLDG FIRE PROTECTION FLOOR PLAN
FP201C	COMET BLDG FIRE PROTECTION FLOOR PLAN
FP201E	EDUCATION BLDG FIRE PROTECTION FLOOR PLAN
FP201HM	MEN'S HOUSING FIRE PROTECTION FLOOR PLAN
FP201HW	WOMEN'S HOUSING FIRE PROTECTION FLOOR PLAN
FP201M	MULTI-PURPOSE BLDG FIRE PROTECTION FLOOR PLAN
FP201R	RECREATION BLDG FIRE PROTECTION FLOOR PLAN
FP201W	WAREHOUSE BLDG FIRE PROTECTION FLOOR PLAN

VOLUME III

GENERAL

G001	COVER SHEET VOLUME III
G002	SHEET INDEX

ELECTRICAL

E001	SYMBOL LIST
E020	SITE PLAN - SOUTH
E021	SITE PLAN - NORTH
E022	SITE LIGHTING PLAN
E023	ENLARGED SITE PLANS
E024	SITE LIGHTING PHOTOMETRIC PLAN
E030	ENLARGED SITE UTILITY PLAN
E101A	ADMINISTRATION BUILDING LIGHTING PLAN
E102A	ADMINISTRATION BUILDING EMERGENCY LIGHTING PHOTOMETRIC PLAN
E201A	ADMINISTRATION BUILDING POWER AND SIGNAL PLAN
E301A	ADMINISTRATION BUILDING MECHANICAL POWER PLAN
E407A	ADMINISTRATION BUILDING PANEL SCHEDULES
E505A	TITLE 24 ADMIN BUILDING
E101C	COMET LIGHTING PLAN
E102C	COMET EMERGENCY LIGHTING PHOTOMETRIC PLAN
E201C	COMET POWER AND SIGNAL PLAN
E301C	COMET MECHANICAL POWER PLAN
E407C	COMET PANEL SCHEDULES
E505C	TITLE 24 COMET BUILDING
E101E	EDUCATION BUILDING LIGHTING PLAN
E102E	EDUCATION BUILDING EMERGENCY LIGHTING PHOTOMETRIC PLAN
E201E	EDUCATION BUILDING POWER AND SIGNAL PLAN
E301E	EDUCATION BUILDING MECHANICAL POWER PLAN
E407E	EDUCATION BUILDING PANEL SCHEDULES
E505E	TITLE 24 EDUCATION BUILDING
E101HM	MEN'S HOUSING LIGHTING PLAN
E102HM	MEN'S HOUSING EMERGENCY LIGHTING PHOTOMETRIC PLAN
E201HM	MEN'S HOUSING POWER AND SIGNAL PLAN
E301HM	MEN'S HOUSING MECHANICAL POWER PLAN
E407HM	MEN'S HOUSING PANEL SCHEDULES
E505HM	TITLE 24 MEN'S HOUSING
E101HW	WOMEN'S HOUSING LIGHTING PLAN
E102HW	WOMEN'S HOUSING EMERGENCY LIGHTING PHOTOMETRIC PLAN
E201HW	WOMEN'S HOUSING POWER AND SIGNAL PLAN
E301HW	WOMEN'S HOUSING MECHANICAL POWER PLAN
E407HW	WOMEN'S HOUSING PANEL SCHEDULES
E505HW	TITLE 24 WOMEN'S HOUSING
E101M	MULTI-PURPOSE BUILDING LIGHTING PLAN
E102M	MULTI-PURPOSE BUILDING EMERGENCY LIGHTING PHOTOMETRIC PLAN
E201M	MULTI-PURPOSE BUILDING POWER AND SIGNAL PLAN
E202M	MULTI-PURPOSE BUILDING ENLARGED KITCHEN PLAN
E301M	MULTI-PURPOSE BUILDING MECHANICAL POWER PLAN
E407M	MULTI-PURPOSE BUILDING PANEL SCHEDULES
E505M	TITLE 24 MULTI-PURPOSE BUILDING
E101R	RECREATION BUILDING LIGHTING PLAN
E102R	RECREATION BUILDING EMERGENCY LIGHTING PHOTOMETRIC PLAN
E201R	RECREATION BUILDING POWER AND SIGNAL PLAN
E301R	RECREATION BUILDING MECHANICAL POWER PLAN
E407R	RECREATION BUILDING PANEL SCHEDULES
E505R	TITLE 24 RECREATION BUILDING
E101W	WAREHOUSE BUILDING LIGHTING PLAN
E102W	WAREHOUSE BUILDING EMERGENCY LIGHTING PHOTOMETRIC PLAN
E201W	WAREHOUSE BUILDING POWER AND SIGNAL PLAN
E301W	WAREHOUSE BUILDING MECHANICAL POWER PLAN
E407W	WAREHOUSE BUILDING PANEL SCHEDULES
E505W	TITLE 24 WAREHOUSE BUILDING
E401	SINGLE LINE DIAGRAM
E402	POWER SYSTEM STUDY AND TRANSFORMER SCHEDULE
E403	GENERATOR SCHEDULE
E404	GENERATOR SPECIFICATIONS
E405	ATS SCHEDULE
E406	SPD SCHEDULE
E501	LIGHTING FIXTURE SCHEDULE
E503	DISTRIBUTED LIGHTING CONTROLS
E504	SEQUENCE OF OPERATION
E505	TITLE 24 POWER DISTRIBUTION
E506	TITLE 24 EXTERIOR LIGHTING
E601	DETAILS
E602	DETAILS
E603	DETAILS
E604	DETAILS
E605	AV DETAILS
E606	AV DETAILS
E701	TELECOM PATHWAYS AND GROUNDING
E801	PV SITE PLAN
E802	PV SINGLE LINE DIAGRAM
E803	PV EQUIPMENT
E804	PV EQUIPMENT
E805	PV EQUIPMENT
E806	PV SIGNAGE

FIRE ALARM

FA001	FIRE ALARM SYMBOL LIST
FA002	FIRE ALARM DETAILS
FA010	FIRE ALARM RISER DIAGRAM
FA011	FIRE ALARM RISER DIAGRAM
FA012	FIRE ALARM CALCULATIONS
FA201A	ADMINISTRATION BUILDING FIRE ALARM PLAN
FA201C	COMET FIRE ALARM PLAN
FA201E	EDUCATION BUILDING FIRE ALARM PLAN
FA201HM	MEN'S HOUSING FIRE ALARM PLAN
FA201HW	WOMEN'S HOUSING FIRE ALARM PLAN
FA201M	MULTI-PURPOSE BUILDING FIRE ALARM PLAN
FA201R	RECREATION BUILDING FIRE ALARM PLAN
FA201W	WAREHOUSE BUILDING FIRE ALARM PLAN

TELECOMMUNICATIONS

T020	SIGNAL SITE PLAN - SOUTH
T021	SIGNAL SITE PLAN - NORTH
T050	FACEPLATE DETAILS
T051	DETAILS
T052	TECHNOLOGY SINGLE LINE DIAGRAM
T053	CCTV SINGLE LINE DIAGRAM
T054	ACCESS SINGLE LINE DIAGRAM
T055	SECURITY CAMERA DETAILS
T056	SECURITY DOOR HARDWARE DETAILS
T057	LV DETAILS

FOOD SERVICE / LAUNDRY

FS-111	FOOD SERVICE EQUIPMENT PLAN
FS-112	FOOD SERVICE BUILDING CONDITIONS & VENTILATION PLAN
FS-113	FOOD SERVICE PLUMBING ROUGH-IN PLAN
FS-114	FOOD SERVICE ELECTRICAL ROUGH-IN PLAN
FS-211	FOOD SERVICE ELEVATIONS
FS-212	FOOD SERVICE ELEVATIONS
FS-213	FOOD SERVICE ELEVATIONS
FS-214	FOOD SERVICE MANUFACTURER DRAWING - EXHAUST HOOD
FS-215	FOOD SERVICE MANUFACTURER DRAWING - FIRE SUPPRESSION
FS-216	FOOD SERVICE MANUFACTURER DRAWING - DEMANDAIRE
FS-217	FOOD SERVICE MANUFACTURER DRAWING - UTILITY WALL
FS-218	FOOD SERVICE MANUFACTURER DRAWING - REFRIGERATION
FS-219	FOOD SERVICE MANUFACTURER DRAWING - REFRIGERATION
LS-111	LAUNDRY EQUIPMENT PLAN

IDENTIFICATION STAMP
DIV. OF THE STATE ARCHITECT
APP: 02-118630 INC:
REVIEWED FOR
SS ☐ FLS ☐ ACS ☑
DATE: 04/13/2021

OFFICE OF THE STATE FIRE MARSHAL
APPROVED FIRE AND PANIC ONLY
Approval of this plan does not authorize or approve any omission or deviation from applicable regulations. Final approval is subject to field inspection. One set of approved plans shall be available on the project site at all times.
PERMIT NO.: 20-N-2332-CP
REVIEWED BY: LITO CATAYLO, OSFM
DATE: 4/1/2021

DGS GENERAL SERVICES
Department of General Services
State of California
Real Estate Services Division
Project Management & Development Branch
707 Third Street, Suite 4-105
West Sacramento, California 95605

NM&R
NICHOLS MELBURG & ROSSETTO
ARCHITECTS + ENGINEERS
300 Knollcrest Drive
Redding, CA. 96002
(530) 222-3300 (530) 222-3538 FAX
http://www.nmrdesign.com

Copyright © 2020
All ideas, designs, arrangements and plans indicated or represented by this drawing are owned by, and the property of, NICHOLS, MELBURG and ROSSETTO and were created, evolved and developed for use on, and in conjunction with, the specified project. None of such ideas, designs, arrangements or plans shall be used by, or disclosed to any person, firm or corporation for any purpose whatsoever without the written permission of NICHOLS, MELBURG and ROSSETTO.

LICENSE STAMPS
LICENSED ARCHITECT KYLE MATTI C-27504 REN. 10/31/21 STATE OF CALIFORNIA

CONSULTANT

DRAWING STATUS
CONSTRUCTION DOCUMENTS

ISSUE

No.	Date	Description
1	10/20/2020	INITIAL PLAN REVIEW
2	01/22/2021	AGENCY RESUBMITTAL
3	03/22/2021	AGENCY RESUBMITTAL

If drawing is not 30" x 42" it is a reduced print

PROJECT
RESIDENTIAL CENTER, UKIAH: REPLACEMENT OF EXISTING RESIDENTIAL CENTER
440 EAST HILL ROAD
WILLITS, CALIFORNIA 95490
MENDOCINO COUNTY
CALIFORNIA CONSERVATION CORP

Supervisor	Designed	Drawn
KJM	DMH	DMH

DSA Application No.
02-118630

SHEET TITLE
SHEET INDEX

DGS Project Number: 000000000001826
NMR Project Number: 18-6456

Reference North
NORTH

Sheet Scale

Sheet Number
G002

ISSUE DATE
July 9, 2021

Plot Date: 3/26/2021 12:46:51 PM
File Name: BIM 360://CCC Willits Residential Center/A_CCC-WRC-COMMON.rvt

ABBREVIATIONS

4S/DP	4" SQUARE BY 2-1/8" DEEP BOX	GFCI	GROUND FAULT CIRCUIT INTERRUPTER	NO	NORMALLY OPENED
ADA	AMERICAN WITH DISABILITIES ACT	GFP	GROUND FAULT PROTECTION	NF	NON-FUSED
A.F.F.	ABOVE FINISH FLOOR	GE or GEC	GROUNDING ELECTRODE CONDUCTOR	NIC	NOT IN CONTRACT
A.F.G.	ABOVE FINISH GRADE	HACR	HEATING AIR CONDITIONING REFRIGERATION	N.T.S.	NOT TO SCALE
AWG	AMERICAN WIRE GAUGE			NL	NIGHT LIGHT
AMP, A	AMPERE	HOA	HAND-OFF-AUTO	NO. or #	NUMBER
A.I.C. or AIC	AMPERES INTERRUPTING CAPACITY (SYMMETRICAL)	HVAC	HEATING, VENTILATING AND AIR CONDITIONING	OFCI	OWNER FURNISHED, CONTRACTOR INSTALLED
A.F.C. or AFC	AVAILABLE FAULT CURRENT	H.,W.,D.,L.	HEIGHT, WIDTH, DEPTH, LENGTH	%Z	PERCENT IMPEDANCE
AF/AT	AMP FRAME, AMP TRIP	HID	HIGH INTENSITY DISCHARGE	PH. or ø	PHASE
AHJ	AUTHORITY HAVING JURISDICTION	HP	HORSEPOWER	PC	PHOTOCELL
AS/AF	AMP SWITCH, AMP FUSE	HPS	HIGH PRESSURE SODIUM	P.C.	PLUMBING CONTRACTOR
ATS	AUTOMATIC TRANSFER SWITCH	IN. or "	INCHES	P	POLE
AVG	AVERAGE	I/G	ISOLATED GROUND	PVC	POLY VINYL CHLORIDE
BJ	BONDING JUMPER	IBC	INTERNATIONAL BUILDING CODE	PDU	POWER DISTRIBUTION UNIT
BDF	BUILDING DISTRIBUTION FRAME	I.D.C.S.	INTEGRATED DIMMING CONTROL PANEL	PRIMARY	OVER 600 VOLTS
BR	BRANCH	IDF	INTERMEDIATE DISTRIBUTION FRAME	PROVIDE	FURNISH, INSTALL AND CONNECT
BLDG	BUILDING	JBOX	JUNCTION BOX	PT	POTENTIAL TRANSFORMER
CBC	CALIFORNIA BUILDING CODE	K	DEGREE KELVIN	PA	PUBLIC ADDRESS
CEC	CALIFORNIA ELECTRICAL CODE	KCMIL	THOUSAND CIRCULAR MILS	(R)	DENOTES RELOCATED DEVICE LOCATION.
CIRC., CKT.	CIRCUIT	KVA	KILOVOLT AMPERES		
CB	CIRCUIT BREAKER	KW	KILOWATT	REC, RECEPT	RECEPTACLE
CSFD	COMBINATION SMOKE FIRE DAMPER	KWH	KILOWATT HOUR	REF	REFRIGERATOR
C	CONDUIT	LCL	LONG CONTINUOUS LOAD	RGS	RIGID GALVANIZED STEEL
C.O.	CONDUIT ONLY, COMPLETE WITH PULLSTRING	LF, L.F.	LINEAR FEET	RMS	ROOT MEAN SQUARE
		LTG, LTS	LIGHTING	SCC	SHORT CIRCUIT CURRENT
CONN	CONNECTED	LPS	LOW PRESSURE SODIUM	SCCR	SHORT CIRCUIT CURRENT RATING
CPT	CONTROL POWER TRANSFORMER	MAX.	MAXIMUM	SCS	STRUCTURED CABLING SYSTEM
CLCB	CURRENT LIMITING CIRCUIT BREAKER	MBJ	MAIN BONDING JUMPER	SFD	SMOKE FIRE DAMPER
CLF	CURRENT LIMITING FUSE	MDF	MAIN DISTRIBUTION FRAME	SECONDARY	600 VOLTS AND LESS
CT	CURRENT TRANSFORMER	MOCP	MAXIMUM OVERCURRENT PROTECTION	SMACNA	SHEET METAL AND AIR COND. CONTRACTOR'S NAT'L ASSOC.
(D)	EXISTING DEVICE TO BE DEMOLISHED	MCB	MAIN CIRCUIT BREAKER		
DAS	DISTRIBUTED ANTENNA SYSTEM	MLO	MAIN LUGS ONLY	SQ.	SQUARE
DIA	DIAMETER	M.C.	MECHANICAL CONTRACTOR	SSBJ	SUPPLY SIDE BONDING JUMPER
DISC	DISCONNECT	M	METER	SBJ	SYSTEM BONDING JUMPER
DIST	DISTRIBUTION	M/M	METER MAIN	TC	TIMECLOCK
D.P.C.S.	DIMMING PANEL CONTROL STATION	MV	MERCURY VAPOR	TEL/DATA	TELEPHONE AND DATA
E.C.	ELECTRICAL CONTRACTOR	MH	METAL HALIDE	TV	TELEVISION
EMS	ENERGY MANAGEMENT CONTROL SYSTEM	MIN.	MINIMUM	T.V.S.S.	TRANSIENT VOLTAGE SURGE SUPPRESSION
EMT	ELECTRICAL METALLIC TUBING	MCA	MINIMUM CIRCUIT AMPS		
ENT	ELECTRICAL NON-METALLIC TUBING	MCC	MOTOR CONTROL CENTER	TYP	TYPICAL
EWC	ELECTRIC WATER COOLER	MCM	THOUSAND CIRCULAR MILS	U.G.P.S.	UNDERGROUND PULL SECTION
E.P.O.	EMERGENCY POWER OFF	MCP	MOTOR CIRCUIT PROTECTOR	U.O.N.	UNLESS OTHERWISE NOTED
E-O-L	END-OF-LINE CIRCUIT TERMINATOR	MFR.	MANUFACTURER	U.P.S. or UPS	UNINTERRUPTIBLE POWER SYSTEM
EF	EXHAUST FAN	MTD	MOUNTED	VAV	VARIABLE AIR VOLUME
EGC or EG or E/G	EQUIPMENT GROUND (GREEN)	MW	MICROWAVE	V	VOLTS
(E)	EXISTING DEVICE TO REMAIN	NATS	NON AUTOMATIC DISCONNECT	VA	VOLT AMPERES
EP	EXPLOSION PROOF	NEC	NATIONAL ELECTRICAL CODE	VD	VOLTAGE DROP
(ER)	EXISTING DEVICE TO BE RELOCATED	NEMA	NATIONAL ELECTRICAL MANUFACTURER'S ASSOCIATION	WP	WEATHERPROOF
FT or '	FEET			W	WIRE
FA or F.A.	FIRE ALARM	NC	NORMALLY CLOSED	XFMR	TRANSFORMER
FLA	FULL LOAD AMPS				
GRD	GROUND				

FIRE ALARM SYSTEM SYMBOLS

SEE FIRE ALARM OR CENTRAL MONITORING SYSTEM DRAWINGS FOR FIRE ALARM SYMBOLS.

SIGNAL SYSTEM SYMBOLS

- B — WALL MOUNTED CLOCK, FIELD VERIFY MOUNTING HEIGHT PRIOR TO INSTALLATION. "B" INDICATES BATTERY OPERATED CLOCK. "D" INDICATES DIGITAL CLOCK, "NO LETTER" INDICATES ANALOG CLOCK. REFER TO SPECIFICATIONS.
- C — CONCEALED CLOCK CONDUIT RUN 1/2" CONDUIT, OR AS NOTED, WITH CONDUCTORS PER SPECIFICATIONS.
- FV — TV OUTLET, WALL MOUNTED. STUB A 3/4" C.O. UP 6" ABOVE THE ACCESSIBLE CEILING AND PROVIDE BUSHING.
- FV — TV OUTLET FLUSH CEILING MOUNTED.
- TV — CONCEALED TELEVISION CONDUIT RUN, 3/4" CONDUIT, OR AS NOTED, WITH CONDUCTORS - REFER TO SPECIFICATIONS.
- MM — MICROPHONE OUTLET, WALL MOUNTED. PROVIDE 3/4" C.O. (WITH PULL ROPE) UP TO 6" ABOVE ACCESSIBLE CEILING SPACE. PROVIDE BUSHING AT EACH END.
- M — MICROPHONE OUTLET, FLUSH CEILING MOUNTED.
- M — CONCEALED MICROPHONE CONDUIT RUN, 3/4" CONDUIT, OR AS NOTED, WITH CONDUCTORS - REFER TO SPECIFICATIONS.
- SV — SURFACE WALL MOUNTED SPEAKER, "V" INDICATES VOLUME CONTROL.
- SV — SURFACE MOUNTED SPEAKER , "V" INDICATES VOLUME CONTROL.
- SV — FLUSH WALL MOUNTED SPEAKER , "V" INDICATES VOLUME CONTROL.
- SV — CEILING FLUSH MOUNTED SPEAKER , "V" INDICATES VOLUME CONTROL.
- SV — ABOVE CEILING MOUNTED SPEAKER , "V" INDICATES VOLUME CONTROL.
- V — VOLUME CONTROL, WALL MOUNTED.
- S — CONCEALED SPEAKER CONDUIT RUN 3/4" CONDUIT, OR AS NOTED, WITH CONDUCTORS - REFER TO SPECIFICATIONS.

MEP EQUIPMENT ANCHORAGE NOTE:

ALL MECHANICAL, ELECTRICAL AND PLUMBING COMPONENTS SHALL BE ANCHORED AND INSTALLED PER THE DETAILS ON THE DSA APPROVED CONSTRUCTION DOCUMENTS. WHERE NO DETAIL IS INDICATED, THE FOLLOWING COMPONENTS SHALL BE ANCHORED OR BRACED TO MEET THE FORCE AND DISPLACEMENT REQUIREMENTS PRESCRIBED IN THE 2016 CBC, SECTIONS 1616A.1.18 THROUGH 1616A.1.26 AND ASCE 7-10, CHAPTERS 13, 26 AND 30.

A. ALL PERMANENT EQUIPMENT AND COMPONENTS.

B. TEMPORARY OR MOVABLE EQUIPMENT THAT IS PERMANENTLY ATTACHED (EG. HARD WIRED) TO THE BUILDING UTILITY SERVICES SUCH AS ELECTRICITY, GAS OR WATER.

C. MOVABLE EQUIPMENT WHICH IS STATIONED IN ONE PLACE FOR MORE THAN 8 HOURS AND HEAVIER THAN 400 POUNDS ARE REQUIRED TO BE ANCHORED WITH TEMPORARY ATTACHMENTS.

THE FOLLOWING MECHANICAL AND ELECTRICAL COMPONENTS SHALL BE POSITIVELY ATTACHED TO THE STRUCTURE, BUT THE ATTACHMENT NEED NOT BE DETAILED ON THE PLANS. THESE COMPONENTS SHALL HAVE FLEXIBLE CONNECTIONS PROVIDED BETWEEN THE COMPONENT AND ASSOCIATED DUCTWORK, PIPING, AND CONDUIT.

A. COMPONENTS WEIGHING LESS THAN 400 POUNDS AND HAVE A CENTER OF MASS LOCATED 4 FEET OR LESS ABOVE THE ADJACENT FLOOR OR ROOF LEVEL THAT DIRECTLY SUPPORT THE COMPONENT.

B. COMPONENTS WEIGHING LESS THAN 20 POUNDS, OR IN THE CASE OF DISTRIBUTED SYSTEMS, LESS THAN 5 POUNDS PER FOOT, WHICH ARE SUSPENDED FROM A ROOF OR FLOOR OR HUNG FROM A WALL.

FOR THOSE ELEMENTS THAT DO NOT REQUIRE DETAILS ON THE APPROVED DRAWINGS, THE INSTALLATION SHALL BE SUBJECT TO THE APPROVAL OF THE DESIGN PROFESSIONAL IN GENERAL RESPONSIBLE CHARGE OR STRUCTURAL ENGINEER DELEGATED RESPONSIBILITY AND THE DSA STRUCTURAL ENGINEER. THE PROJECT INSPECTOR WILL VERIFY THAT ALL COMPONENTS AND EQUIPMENT HAVE BEEN ANCHORED IN ACCORDANCE WITH THE ABOVE REQUIREMENTS.

PIPING, DUCTWORK AND ELECTRICAL DISTRIBUTION SYSTEM BRACING NOTE:

PIPING, DUCTWORK AND ELECTRICAL DISTRIBUTION SYSTEMS SHALL BE BRACED TO COMPLY WITH THE FORCES AND DISPLACEMENTS PRESCRIBED IN ASCE 7-10 SECTION 13.3 AS DEFINED IN ASCE 7-10 SECTION 13.6.5.6, 13.6.7, 13.6.8 AND 2016 CBC, SECTIONS 1616A.1.23, 1616A.1.24, 1616A.1.25 AND 1616A.1.26.

THE METHOD OF SHOWING BRACING AND ATTACHMENTS TO THE STRUCTURE FOR THE IDENTIFIED DISTRIBUTION SYSTEM ARE AS NOTED BELOW. WHEN BRACING AND ATTACHMENTS ARE BASED ON A PREAPPROVED INSTALLATION GUIDE (E.G. SMACNA OR OSHPD OPM), COPIES OF THE BRACING SYSTEM INSTALLATION GUIDE OR MANUAL SHALL BE AVAILABLE ON THE JOBSITE PRIOR TO THE START OF AND DURING THE HANGING AND BRACING OF THE DISTRIBUTION SYSTEMS. THE STRUCTURAL ENGINEER OF RECORD SHALL VERIFY THE ADEQUACY OF THE STRUCTURE TO SUPPORT THE HANGER AND BRACE LOADS.

MECHANICAL PIPING (MP), MECHANICAL DUCTS (MD), PLUMBING PIPING (PP), ELECTRICAL DISTRIBUTION SYSTEMS (E):

MP☐ MD☐ PP☐ E☐ OPTION 1: DETAILED ON THE APPROVED DRAWINGS WITH PROJECT SPECIFIC NOTES AND DETAILS.

MP☐ MD☐ PP☐ E☒ OPTION 2: SHALL COMPLY WITH THE APPLICABLE OSHPD PRE-APPROVAL (OPM#) #0052-13 & #0043-13.

MP☐ MD☐ PP☐ OPTION 3: SHALL COMPLY WITH THE SMACNA SEISMIC RESTRAINT MANUAL, OSHPD EDITION (2009), INCLUDING ANY ADDENDA. FASTENERS AND OTHER ATTACHMENTS NOT SPECIFICALLY IDENTIFIED IN THE SMACNA SEISMIC RESTRAINT MANUAL, OSHPD EDITION, ARE DETAILED ON THE APPROVED DRAWINGS WITH PROJECT SPECIFIC NOTES AND DETAILS. THE DETAILS SHALL ACCOUNT FOR THE APPLICABLE SEISMIC HAZARD LEVEL _____ AND CONNECTION LEVEL _____ FOR THE PROJECT AND CONDITIONS.

ANNOTATIONS

- A — PANEL CALLOUT, "A" INDICATES PANELBOARD OR EQUIPMENT DESIGNATION.
- AC / 2 — MECHANICAL EQUIPMENT CALLOUT, "AC" INDICATES UNIT TYPE AND "2" INDICATES UNIT NUMBER. REFER TO MECHANICAL DRAWINGS FOR EXACT LOCATION AND ELECTRICAL REQUIREMENTS.
- 3 / E-1 — DETAIL CALLOUT, "3" INDICATES DETAIL NUMBER "E-1" INDICATES SHEET NUMBER.
- 2 — PLAN NOTE REFERENCE, REFER TO NOTES ON SHEET, OR AS DIRECTED.
- 4 — REVISION REFERENCE.
- WYE CONFIGURATION — DELTA CONFIGURATION — GROUND

CCTV SYSTEM SYMBOLS

- CCVMS — VIDEO MANAGEMENT SYSTEM - CCTV HEADEND - SEE SPECIFICATIONS.
- CCWS — CCTV WORKSTATION AND MONITOR - SEE SPECIFICATIONS.
- CCTV FIXED POSITION CAMERA - SEE SPECIFICATIONS.
- CCTV PAN/TILT CAMERA - SEE SPECIFICATIONS.
- CC — CCTV SYSTEM BRANCH CIRCUIT PER CCTV SYSTEM RISER DIAGRAM AND/OR SPECIFICATIONS.

TELEPHONE/DATA SYMBOLS

- TELEPHONE OUTLET BOX, WALL MOUNTED. STUB A 1" C.O. UP 6" ABOVE THE ACCESSIBLE CEILING AND PROVIDE A BUSHING. 4S/DP MINIMUM WITH SINGLE GANG RING.
  "W" = WALL MOUNTED PHONE
  "P" = PUBLIC (PAY) PHONE. VERIFY ALL REQUIREMENTS WITH THE TELEPHONE UTILITY COMPANY. PROVIDE 1" C.O. (MIN) TO THE MAIN TELEPHONE BACKBOARD. MOUNTING HEIGHT AS REQUIRED.
- DATA OUTLET BOX, WALL MOUNTED. STUB A 1" C.O. UP 6-INCHES ABOVE THE ACCESSIBLE CEILING AND PROVIDE A BUSHING. 4S/DP MINIMUM WITH SINGLE GANG RING.
- COMBINATION TELEPHONE AND DATA OUTLET BOX, WALL MOUNTED. STUB A 1" C.O. UP 6-INCHES ABOVE THE ACCESSIBLE CEILING AND PROVIDE A BUSHING. 4S/DP MINIMUM WITH SINGLE GANG RING.
- TELEPHONE OUTLET BOX, FLUSH MOUNTED IN CEILING - MOUNT FLUSH IN FLOOR WHEN INDICATED IN A FLOOR BOX SYMBOL.
- DATA OUTLET BOX FLUSH MOUNTED IN CEILING - MOUNT FLUSH IN FLOOR WHEN INDICATED IN A FLOOR BOX SYMBOL.
- COMBINATION TELEPHONE AND DATA OUTLET BOX FLUSH MOUNTED IN CEILING - MOUNT FLUSH IN FLOOR WHEN INDICATED IN A FLOOR BOX SYMBOL.
- TELEPHONE OUTLET BOX, WALL MOUNTED 6-INCHES ABOVE COUNTER OR SPLASH. STUB A 1" C.O. UP 6-INCHES ABOVE THE ACCESSIBLE CEILING AND PROVIDE A BUSHING. 4S/DP MINIMUM WITH SINGLE GANG RING.
- DATA OUTLET BOX, WALL MOUNTED 6-INCHES ABOVE COUNTER OR SPLASH. STUB A 1" C.O. UP 6-INCHES ABOVE THE ACCESSIBLE CEILING AND PROVIDE A BUSHING. 4S/DP MINIMUM WITH SINGLE GANG RING.
- COMBINATION TELEPHONE AND DATA OUTLET BOX, WALL MOUNTED 6-INCHES ABOVE COUNTER OR SPLASH. STUB A 1" C.O. UP 6-INCHES ABOVE THE ACCESSIBLE CEILING AND PROVIDE A BUSHING. 4S/DP MINIMUM WITH SINGLE GANG RING.
- COMBINATION TELEPHONE AND DATA OUTLET BOX MOUNTED IN ACCESSIBLE CEILING SPACE OR IN FLOOR BOX PER PLAN FOR FLEXIBLE CONNECTION TO FURNITURE SYSTEM. VERIFY CONNECTION REQUIREMENTS WITH MANUFACTURER PRIOR TO ROUGH-IN - MOUNT FLUSH IN FLOOR WHEN INDICATED IN A FLOOR BOX SYMBOL.
- COMBINATION TELEPHONE AND DATA OUTLET, WALL MOUNTED AT +18-INCHES A.F.F. FOR FLEXIBLE CONNECTION TO FURNITURE SYSTEM. PROVIDE THE FOLLOWING:
  - IN A NON-RATED INSULATED WALL, OR NON-RATED UNINSULATED WALL, PROVIDE A 2-GANG MUD RING OR CADDY #RBS SERIES BOX MOUNTING BRACKET (EQUAL BY B-LINE OR RAYCO) WITH (2) 1-1/2"C.O. WITH PULL STRING TO ACCESSIBLE CEILING. PROVIDE 1-1/2" BUSHINGS AT CONDUIT ENDS. REFER TO ARCHITECTURAL PLANS FOR WALL CONSTRUCTION/TYPE AND CEILING CONDITIONS.
  - IN A RATED WALL, PROVIDE (1) 4S/DP BOX WITH (2) 1-1/4"C.O. AND (1) 4S/DP BOX WITH (1) 1-1/4"C.O. WITH PULL STRINGS IN EACH CONDUIT TO ACCESSIBLE CEILING. PROVIDE 1-1/4" BUSHINGS AT CONDUIT ENDS. UTILIZE CADDY #RBS SERIES BOX MOUNTING BRACKET TO MAINTAIN BOX ALIGNMENT (EQUAL BY B-LINE OR RAYCO). UTILIZE FIRESTOPPING SYSTEM PADS RATED FOR USE ON THE INSIDE OR OUTSIDE OF THE BOX (STI OR EQUAL) AS REQUIRED TO MAINTAIN RATING OF WALL OR MEMBRANE. REFER TO ARCHITECTURAL PLANS FOR WALL CONSTRUCTION/TYPE AND CEILING CONDITIONS.
- T1 — CONCEALED TELEPHONE/DATA CONDUIT RUN, 1-INCH CONDUIT ONLY (MIN). SEE TABLE FOR CONDUIT SIZE VARIATIONS.
  T2 = 1-1/4" C.O. T3 = 1-1/2" C.O. T4 = 2" C.O.
- FLUSH MOUNTED, LOCKABLE TERMINAL CABINET WITH TERMINAL STRIPS AS REQUIRED.
- SURFACE MOUNTED, LOCKABLE TERMINAL CABINET WITH TERMINAL STRIPS AS REQUIRED.
- TELEPHONE TERMINAL BACKBOARD SIZED AS NOTED, REFER TO SYSTEM GROUND DETAIL.
- A — WIRELESS ACCESS POINT OUTLET BOX WITH CONDUCTORS MOUNTED ABOVE CEILING - PROVIDE 4S DP J-BOX AND WEATHERPROOF BLANK COVER WITH CONDUIT AND CONDUCTORS WHEN INDICATED ON BUILDING EXTERIOR. ELECTRONICS ARE OFOI, UNLESS OTHERWISE NOTED IN SPECIFICATIONS. SEE FACEPLATE DETAIL AND LAN SYSTEM BLOCK DIAGRAM FOR MORE INFORMATION.

LIGHTING SYMBOLS

SITE LIGHTING FIXTURE SYMBOLS DEPICTED WITH CAPITAL LETTER(S) ADJACENT TO RESPECTIVE SYMBOL(S) INDICATE(S) LIGHT FIXTURE MOUNTING BASE DETAIL(S). SEE LIGHTING FIXTURE SCHEDULE FOR FIXTURE SYMBOL INFORMATION.

- 1a — LIGHTING FIXTURE CALL OUT, NUMBER(S) AND/OR UPPER CASE LETTER(S) (i.e. "1") INDICATES FIXTURE TYPE (REFER TO LIGHTING FIXTURE SCHEDULE). LOWER CASE LETTER (i.e. "a") ADJACENT TO FIXTURE TYPE INDICATES BALLAST OPTION (SEE GENERAL LIGHTING FIXTURE SCHEDULE NOTES).
- J — INDICATES FINAL CONNECTION TO A LIGHTING FIXTURE, NUMBER OF CONDUCTORS AS REQUIRED.

LIGHTING CONTROL SYMBOLS

SEE THE DISTRIBUTED LIGHTING CONTROL SPECIFICATIONS FOR MORE INFORMATION.

- LOW-VOLTAGE WIRING BETWEEN OCCUPANCY SENSORS, VACANCY SENSORS, DAY-LIGHTING CONTROLS, LOW-VOLTAGE SWITCHES, AND SWITCHPACKS. CONDUCTOR TYPE AND QUANTITY PER MANUFACTURER'S RECOMMENDATIONS AND WIRING DIAGRAMS.
- H — WALL MOUNTED DIMMER. SEE SINGE POLE SWITCH SYMBOL FOR RELATED SUBSCRIPTS. QUANTITY OF ADJACENT LOWER CASE LETTERS INDICATES QUANTITY OF DIMMERS REQUIRED. PROVIDE DIMMER TYPE TO MATCH INDICATED BALLAST TYPE AND CONTROL REQUIREMENTS.
- X(y), X(y), X(y,z) — WALL MOUNTED STAND ALONE OCCUPANCY SENSOR. QUANTITY OF ADJACENT LOWER CASE LETTERS INDICATES QUANTITY OF RELAYS CIRCUITS REQUIRED - SEE CONTROL CONFIGURATIONS BELOW FOR MORE INFORMATION. EXACT CONTROL FUNCTION IS DETERMINED BY THE BALLAST/FIXTURE TYPE.
- H X(y), H X(y), H X(y) — WALL MOUNTED NON-NETWORKED / INTERCONNECTED/ NETWORKED, SYSTEM-BASED OCCUPANCY SENSOR. QUANTITY OF ADJACENT LOWER CASE LETTERS INDICATES QUANTITY OF RELAYS/DIMMING CIRCUITS REQUIRED - SEE CONTROL CONFIGURATIONS BELOW FOR MORE INFORMATION. EXACT CONTROL FUNCTION IS DETERMINED BY THE BALLAST/FIXTURE TYPE. ADJACENT UPPER CASE LETTER ("H") INDICATES CONNECTION TO HVAC SYSTEM CONTROLS.
- H,DM,AV,P y,(y) — 1-WAY / 2-WAY DIRECTIONAL CEILING MOUNTED, NON-NETWORKED / INTERCONNECTED/ NETWORKED, SYSTEM-BASED OCCUPANCY SENSOR. QUANTITY OF ADJACENT LOWER CASE LETTERS INDICATES QUANTITY OF RELAYS / DIMMING CIRCUITS REQUIRED - SEE CONTROL CONFIGURATIONS BELOW FOR MORE INFORMATION. EXACT CONTROL FUNCTION IS DETERMINED BY THE BALLAST/FIXTURE TYPE. ADJACENT UPPER CASE LETTER ("H") INDICATES CONNECTION TO HVAC SYSTEM CONTROLS VIA CONTROLLED DRY-CONTACT CLOSURE. ADJACENT UPPER CASE LETTERS ("DM") INDICATES DUAL MODE CONTROL AT CORRIDORS, STAIRWELLS AND WAREHOUSE AISLEWAYS. ADJACENT UPPER CASE LETTERS ("AV") INDICATES CONNECTION TO AV CONTROL SYSTEM. ADJACENT UPPER CASE LETTER ("P") INDICATES CONNECTION TO MOVEABLE PARTITION INTERFACE, SENSOR & STATUS INDICATOR.
- H Ky, H Vy, H y, H DM — LOW VOLTAGE MOMENTARY SWITCHES, WALL MOUNTED, FOR MANUAL "ON/OFF SWITCHING" AND "DIMMING" (STEPPED / CONTINUOUS) CONTROL OF LIGHTING WHICH IS CONTROLLED BY CEILING MOUNTED OCCUPANCY SENSORS. ADJACENT LOWER CASE LETTERS INDICATES QUANTITY OF SWITCHLEGS TO BE CONTROLLED. EXACT CONTROL FUNCTION IS DETERMINED BY THE BALLAST/FIXTURE TYPE. UPPER CASE SUBSCRIPT "K" INDICATES LOCKING SWITCH FOR THE SUBSEQUENT LOWER CASE LETTER. UPPER CASE SUBSCRIPT "V" INDICATES VANDAL RESISTANT SWITCH. UPPER CASE SUBSCRIPT "DM" INDICATES DUAL MODE CONTROL SWITCH.
- S (50) y* — AUTOMATIC SWITCHING / STEP-DIMMING DAYLIGHTING CONTROLLER USED TO SWITCH OFF LIGHTS WHEN SUFFICIENT NATURAL LIGHT IS PRESENT. NUMBER IN PARENTHESIS INDICATES THE AVERAGE WORKPLANE "TARGET ILLUMINATION" SYMBOL VALUE. ADJACENT LOWER CASE LETTER(S) INDICATES SWITCH LEG(S) CONTROLLED. ADJACENT "+, ++ AND "" INDICATES PORTION OF SWITCHLEG CONTROLLED BY SENSOR WHERE "+" INDICATES PRIMARY SIDELIT DAYLIT ZONE, "++" INDICATES SECONDARY SIDELIT DAYLIT ZONE, AND "" INDICATES SKYLIT DAYLIT ZONE
- AV (50) y* — AUTOMATIC CONTINUOUS DIMMING DAYLIGHTING CONTROLLER USED TO DIM LIGHTS WHEN SUFFICIENT NATURAL LIGHT IS PRESENT. NUMBER IN PARENTHESIS INDICATES THE AVERAGE WORKPLANE "TARGET ILLUMINATION" SYMBOL VALUE. ADJACENT LOWER CASE LETTER(S) INDICATES SWITCH LEG(S) CONTROLLED. ADJACENT "+, ++ AND "" INDICATES PORTION OF SWITCHLEG CONTROLLED BY SENSOR WHERE "+" INDICATES PRIMARY SIDELIT DAYLIT ZONE, "++" INDICATES SECONDARY SIDELIT DAYLIT ZONE, AND "" INDICATES SKYLIT DAYLIT ZONE

CONTROL CONFIGURATIONS:

- y — "y" INDICATES THAT SWITCH LEG "y" TO BE CONFIGURED IN A "AUTO ON 100% / AUTO OFF" AND BE CONTROLLED (CONTINUOUSLY DIMMED) BY THE ASSOCIATED CEILING SENSOR REMOTE SWITCH ON THE WALL.
- y,(y) — "y,(y)" INDICATES THAT SWITCH LEG "y" TO BE CONFIGURED IN A "AUTO ON 50% / MANUAL ON 100% / AUTO OFF" AND BE CONTROLLED (CONTINUOUSLY DIMMED) BY THE ASSOCIATED DISTRIBUTED LIGHTING CONTROLS. .
- (y) — "(y)" INDICATES THAT SWITCH LEG "y" IS TO BE CONFIGURED IN A "MANUAL ON / AUTO OFF" (VACANCY SENSOR) AND BE CONTROLLED BY THE ASSOCIATED DISTRIBUTED LIGHTING CONTROLS.

MISCELLANEOUS SYSTEM SYMBOLS

- ICP — INVERTER CONTROL PANEL - SEE INVERTER SPECIFICATIONS.
- IAP — INVERTER ANNUNCIATOR PANEL - SEE INVERTER SPECIFICATIONS.
- GAP — GENERATOR ANNUNCIATOR PANEL - SEE GENERATOR SYSTEM SPECIFICATIONS FOR MORE INFORMATION.
- IDCS — INTEGRATED DIMMING CONTROL STATION (IDCS) PANEL - WALL MOUNTED. SEE IDCS SYSTEM SPECIFICATIONS FOR MORE INFORMATION.
- DPCS — DIMMING PANEL CONTROL STATION (DPCS) PANEL - WALL MOUNTED. SEE DPCS SYSTEM SPECIFICATIONS FOR MORE INFORMATION.
- L — LIGHTING CONTROL SYSTEM LOCAL SWITCH - WALL MOUNTED. SEE LIGHTING CONTROL SYSTEM SPECIFICATIONS FOR MORE INFORMATION.
- O — LIGHTING CONTROL SYSTEM OVERRIDE SWITCH - WALL MOUNTED. SEE LIGHTING CONTROL SYSTEM SPECIFICATIONS FOR MORE INFORMATION.
- M — LIGHTING CONTROL SYSTEM MASTER SWITCH - WALL MOUNTED. SEE LIGHTING CONTROL SYSTEM SPECIFICATIONS FOR MORE INFORMATION.
- R — IDCS/DPCS SYSTEM REMOTE STATION SWITCH - WALL MOUNTED. SEE IDCS SYSTEM AND/OR DPCS SYSTEM SPECIFICATIONS FOR MORE INFORMATION
- P — IDCS/DPCS SYSTEM PARTITION STATION SWITCH - WALL MOUNTED. SEE IDCS SYSTEM AND/OR DPCS SYSTEM SPECIFICATIONS FOR MORE INFORMATION.

BRANCH CIRCUIT SYMBOLS

- A-1,3,5 — HOME RUN TO PANEL. LETTER DESIGNATES PANEL, NUMBERS INDICATE CIRCUITS. HASH MARKS INDICATE NUMBER OF CONDUCTORS IN CONDUIT RUN, #12 AWG MINIMUM UNLESS OTHERWISE NOTED.
- A-1&3&5 — HOME RUN TO PANEL. LETTER DESIGNATES PANEL, NUMBERS INDICATE CIRCUITS WITH SEPARATE NEUTRALS. "&" INDICATES SEPARATE NEUTRALS.
- A-1+3+5 — HOME RUN TO PANEL. LETTER DESIGNATES PANEL, NUMBERS INDICATE CIRCUITS. "+" INDICATES SEPARATE #10 NEUTRAL THROUGHOUT BRANCH CIRCUIT. HASH MARK " " INDICATES AN ISOLATED GROUND CONDUCTOR.
- CONCEALED CONDUIT OR BRANCH CIRCUIT UNLESS OTHERWISE NOTED. 1/2" CONDUIT MINIMUM, (2) #12 AWG CONDUCTORS MINIMUM.
- CONDUIT OR BRANCH CIRCUIT CONCEALED BELOW GRADE, 3/4" CONDUIT MINIMUM WITH (2) 12 AWG CONDUCTORS MINIMUM AND A CODE SIZED EQUIPMENT GROUND.
- SURFACE-MOUNTED CONDUIT OR BRANCH CIRCUIT UNLESS OTHERWISE NOTED. 1/2" CONDUIT MINIMUM, (2) #12 AWG CONDUCTORS MINIMUM.
- TANDEM WIRING CONNECTION.
- CONDUIT STUB OUT, CAP, MARK AND RECORD ON AS-BUILT DRAWINGS
- CONDUIT CONTINUATION.
- FLEXIBLE CONNECTION AS REQUIRED. NUMBER OF CONDUCTORS AS REQUIRED. VERIFY CONNECTION REQUIREMENTS WITH MANUFACTURER PRIOR TO ROUGH-IN.
- CONDUIT/ BRANCH CIRCUIT/FEEDER CONTINUATION DOWN WALL TO FLOOR BELOW
- CONDUIT/ BRANCH CIRCUIT/FEEDER CONTINUATION UP WALL TO FLOOR ABOVE

FLOOR BOX / SPECIALTY WALL BOX / PEDESTAL BOX SYMBOLS

- SINGLE SERVICE IN FLOOR BOX. PROVIDE DEVICES PER PLAN. SEE FLOOR BOX DETAILS AND SPECIFICATIONS FOR MORE INFORMATION.
- TWO SERVICE IN FLOOR BOX. PROVIDE DEVICES PER PLAN. SEE FLOOR BOX DETAILS AND SPECIFICATIONS FOR MORE INFORMATION.
- THREE SERVICE IN FLOOR BOX. PROVIDE DEVICES PER PLAN. SEE FLOOR BOX DETAILS AND SPECIFICATIONS FOR MORE INFORMATION.
- FOUR SERVICE IN FLOOR BOX. PROVIDE DEVICES PER PLAN. SEE FLOOR BOX DETAILS AND SPECIFICATIONS FOR MORE INFORMATION.
- SIX SERVICE IN FLOOR BOX. PROVIDE DEVICES PER PLAN. SEE FLOOR BOX DETAILS AND SPECIFICATIONS FOR MORE INFORMATION.
- AV — 7-GANG AV FLOOR BOX. PROVIDE DEVICES PER PLAN. SEE FLOOR BOX DETAILS AND SPECIFICATIONS FOR MORE INFORMATION.
- AV — RECESSED, ADJUSTABLE DEPTH, FLAT PANEL TV/DISPLAY WALL BOX WITH FLUSH GROMMETED COVER PANEL (CHIEF #PAC525F) AND MINIMUM OF (1) 1-1/4"C.O. FROM TOP-MOUNTED L.V. CONDUIT ENTRY BOX TO ACCESSIBLE CEILING. SEE PLANS FOR ANY ADDITIONAL CONDUIT REQUIREMENTS. PROVIDE ADDITIONAL L.V. AND LINE VOLTAGE CONDUIT ENTRY BOXES AS REQUIRED TO ACCOMPLISH WALL BOX CONFIGURATION DEPICTED ON PLANS. FLUSH GROMMETED COVER SHALL BE WHITE, BLACK OR CUSTOM COLOR PER ARCHITECT. WHEN FIELD CONDITIONS PROHIBIT INSTALLATION OF THIS DEVICE (SUCH AS WALL STUD/CAVITY DEPTH OF LESS THAN 2.5" ETC), CONFIRM VIA WRITTEN RFI THE INSTALLATION OF A TRADITIONAL POWER AND DATA RECEPTACLE INSTALLATION ALONG SIDE OCTV/AV JUNCTION BOX CONSISTING OF 2-GANG DEEP JUNCTION BOX/2-GANG RING WITH 1-1/4"C.O. TO ACCESSIBLE CEILING IN ADDITION TO ANY OTHER CONDUIT REQUIREMENTS DEPICTED ON PLANS. REFER TO ARCHITECTURAL PLANS AND ELEVATIONS FOR MOUNTING HEIGHT.
- SINGLE OR DUAL SERVICE RECESSED EXTERIOR WALL BOX - TYPE "WP-A". PROVIDE DEVICES PER PLAN. EACH LV OR UNUSED COMPARTMENT SHALL BE EQUIPPED WITH A 1"CO TO THE NEAREST ACCESSIBLE CEILING SPACE U.O.N. SEE EXTERIOR DETAILS AND SPECIFICATIONS FOR MORE INFORMATION.
- SINGLE OR DUAL SERVICE EXTERIOR PEDESTAL - TYPE "WP-C". PROVIDE DEVICES PER PLAN. SEE EXTERIOR DETAILS AND SPECIFICATIONS FOR MORE INFORMATION. ARROW DENOTES DEVICE DOOR LOCATION.

POWER SYMBOLS

ALL RECEPTACLE OUTLETS SHOWN WITH A DIAGONAL SLASH SHALL BE

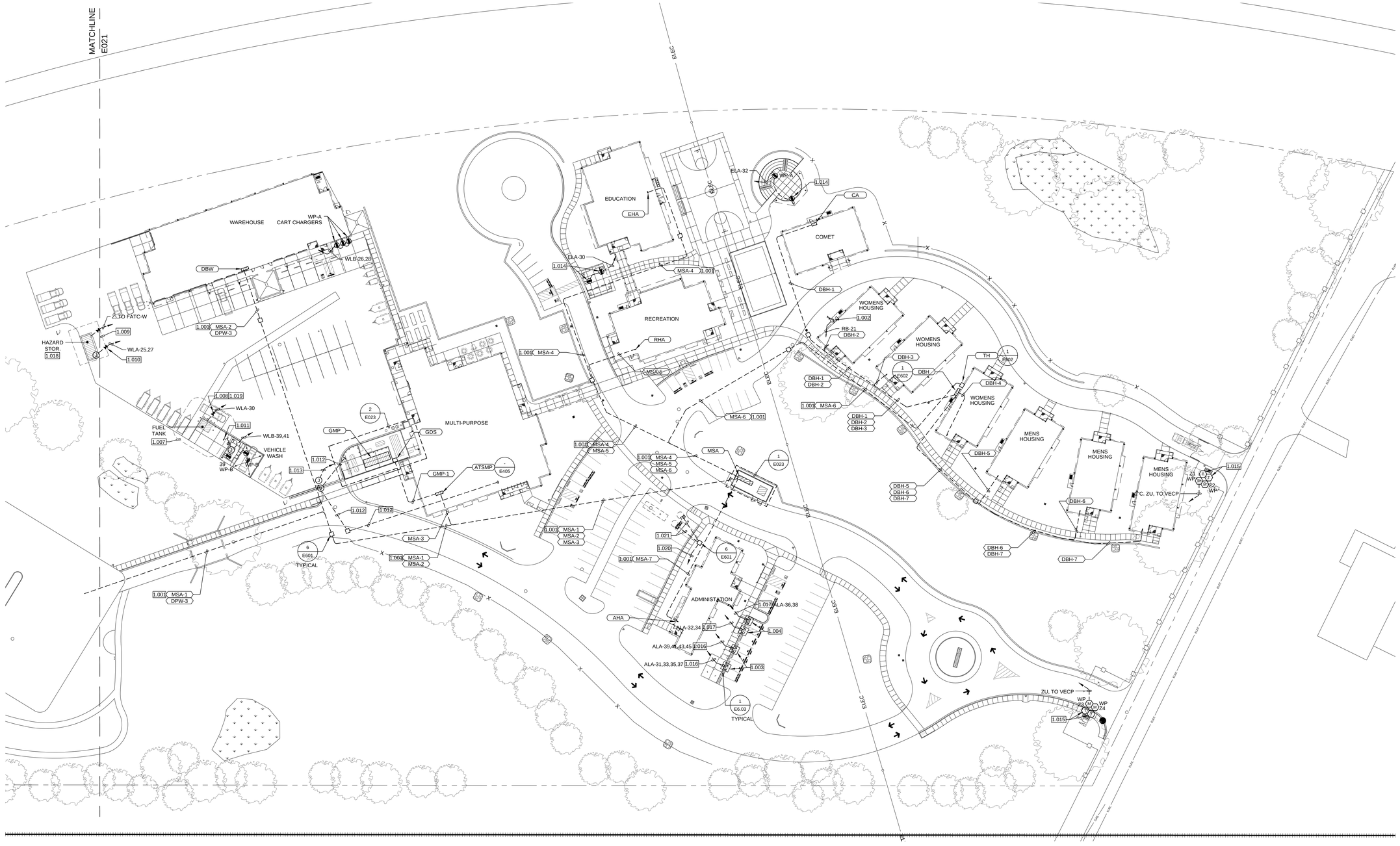

SITE PLAN GENERAL NOTES:

1. CONTRACTOR SHALL EXERCISE EXTREME CAUTION IN EXCAVATING AND TRENCHING ON THIS SITE TO AVOID EXISTING DUCTS, PIPING OR CONDUITS, ETC., AND TO PREVENT HAZARDS TO PERSONNEL AND/OR DAMAGE TO EXISTING UNDERGROUND UTILITIES OR STRUCTURES WHETHER OR NOT SHOWN AND INSTALLED BY ANY OTHER CONTRACTS. THE ENGINEER IS NOT RESPONSIBLE FOR THE LOCATION OF UNDERGROUND UTILITIES OR STRUCTURES WHETHER OR NOT SHOWN OR DETAILED AND INSTALLED BY ANY OTHER CONTRACTS. THE CONTRACTOR SHALL IMMEDIATELY NOTIFY THE ENGINEER SHOULD SUCH UNIDENTIFIED CONDITIONS BE DISCOVERED. THESE DRAWINGS AND SPECIFICATIONS DO NOT INCLUDE THE NECESSARY ELEMENTS FOR CONSTRUCTION SAFETY.
2. CALL UNDERGROUND SERVICE ALERT (USA) AT 1 (800) 422-4133 OR APPLICABLE STATE AND LOCAL DIG SAFE OR UNDERGROUND ALERT HOTLINES PRIOR TO CONSTRUCTION START.
3. MINIMUM CONDUIT SIZE SHALL BE 3/4" - U.O.N.
4. MINIMUM CONDUCTOR SIZE SHALL BE #10 AWG. - U.O.N.
5. ALL SITE BRANCH CIRCUITS SHALL INCLUDE AN EQUIPMENT GROUND CONDUCTOR THAT, AT MINIMUM, MATCHES THE SIZE OF THE ASSOCIATED BRANCH CIRCUIT CONDUCTOR. WHERE MULTIPLE BRANCH CIRCUITS ARE ROUTED/GROUPED TOGETHER, THE EQUIPMENT GROUNDING CONDUCTOR SHALL MATCH THE SIZE OF THE LARGEST BRANCH CIRCUIT CONDUCTOR IN THE GROUP.
6. ALL ELECTRICAL EQUIPMENT MOUNTED OUTDOORS SHALL BE WEATHERPROOF (NEMA #3R).
7. ALL CONDUIT ONLY SHALL BE PROVIDED WITH A NYLON PULL STRING.
8. SEE ARCHITECTURAL/LANDSCAPE ARCHITECTURAL PLANS FOR EXACT LOCATIONS OF FIXTURES, PULLBOXES, MANHOLES, OTHER ELECTRICAL DEVICES, ETC. COORDINATE ALL UNDERGROUND STRUCTURES AND CONDUIT ROUTING WITH LANDSCAPE ARCHITECT PRIOR TO ROUGH-IN TO ENSURE THAT SUCH ITEMS ARE NOT PLACED IN CRITICAL LANDSCAPE PLANTING/HARDSCAPE AREAS.
9. UNLESS SPECIFICALLY SHOWN AS (E), (R), (ER), (D), EXISTING OR NON-BOLD, ALL ELECTRICAL DEVICES SHOWN ARE NEW.
10. SEE DETAIL 8/E603 FOR CONDUIT BURIAL AND TRENCHING REQUIREMENTS. WHERE CONDUITS CROSS BUILDING FOUNDATIONS, REFER TO DETAIL 15/S532

REFERENCE NORTH / TRUE NORTH

ELECTRICAL SITE PLAN - SOUTH

SCALE: 1" = 40'-0"

0' 20' 40' 80' 160'

PLAN NOTES:

1.001 PROVIDE (1) 4"C.O. SPARE.

1.002 CONNECT TO IRRIGATION CONTROLLER(S) AS REQUIRED. VERIFY CONNECTION REQUIREMENTS AND EXACT LOCATION WITH IRRIGATION CONTRACTOR PRIOR TO ROUGH-IN.

1.003 EV DUAL PORT/DUAL CIRCUIT CHARGING STATION TO BE CONTRACTOR PROVIDED. CONTRACTOR INSTALLED. CONNECT COMPLETE TO EV CHARGING STATION AS REQUIRED. COORDINATE ALL REQUIREMENTS WITH EV CHARGER STATION SUPPLIER PRIOR TO ROUGH-IN. STUB UP CONDUIT AT EV CHARGING STATION(S) AS REQUIRED, VERIFY EXACT LOCATION IN FIELD PRIOR TO ROUGH-IN.
CHARGEPOINT #CT4021

1.004 EV SINGLE PORT CHARGING STATION TO BE CONTRACTOR PROVIDED. CONTRACTOR INSTALLED. CONNECT COMPLETE TO EV CHARGING STATION AS REQUIRED. COORDINATE ALL REQUIREMENTS WITH EV CHARGER STATION SUPPLIER PRIOR TO ROUGH-IN. STUB UP CONDUIT AT EV CHARGING STATION(S) AS REQUIRED, VERIFY EXACT LOCATION IN FIELD PRIOR TO ROUGH-IN.
CHARGEPOINT #CT4011

1.005 NOT USED.

1.006 NOT USED.

1.007 GASOLINE AND DIESEL FUEL TANKS AND PUMPS. ALL WORK WITHIN 20' OF THE FUEL DISPENSERS SHALL COMPLY WITH CEC ARTICLE 514. SEE G101 AND A062 FOR ADDITIONAL INFORMATION.

1.008 PROVIDE EXPLOSION PROOF CONDUIT SEALS, CROUSE HINDS EYS SERIES, SIZE AS REQUIRED, WITH CHICO SEALING COMPOUND AND FIBER, IN ACCORDANCE WITH CEC SECTION 514.9(A) AND (B).

1.009 CLASS 1 DIVISION 2 HAZARDOUS LOCATION, CEC SECTION 500.5(B)(2). ALL WORK WITHIN THIS ZONE SHALL COMPLY WITH CEC SECTION 501.SEE G101 AND A062 FOR ADDITIONAL INFORMATION. ALL CONDUIT AND FITTINGS WITHIN THIS AREA SHALL BE PVC COATED GRS.

1.010 PROVIDE CONDUIT SEALS IN ACCORDANCE WITH CEC SECTION 501.15(B) AND (C).

1.011 FUEL PUMP CONTROL PANEL AND EMERGENCY FUEL PUMP SHUT OFF BUTTON. SEE DETAIL #8, SHEET E602. VERIFY MOUNTING LOCATION IN FIELD. PROVIDE SIGNAGE FOR THE EMERGENCY PUMP SHUT OFF STATING "EMERGENCY PUMP SHUT OFF".

1.012 1"C.O. FOR DATA LINE TO FUTURE CARD READERS. CAP AND MARK FOR FUTURE USE.

1.013 1"C.O. FOR FUTURE POWER TO GATE OPERATOR. ROUTE TO MULTI-PURPOSE BUILDING ELECTRICAL ROOM. CAP AND MARK FOR FUTURE USE.

1.014 PROVIDE WP-B RECEPTACLE MOUNTED TO CANOPY COLUMN.

1.015 CONNECT ALL REQUIRED FIRE ALARM DEVICES TO FIRE WATER LINE OSY/PIV/DOUBLE BACK CHECK VALVES ETC TO FIRE ALARM SYSTEM. PROVIDE 3/4"C WITH REQUIRED CONDUCTORS. SEE FIRE ALARM SYSTEM SPECIFICATIONS FOR ADDITIONAL REQUIREMENTS.

1.016 PROVIDE 1"C. 4#8, 1#8 GRD.

1.017 PROVIDE 1"C. 2#8, 1#8 GRD.

1.018 HAZARDOUS MATERIAL STORAGE BUILDING. PREFABRICATED COMPLETE WITH 100 AMP 120/208 VOLT, 3 PHASE, 4 WIRE LOADCENTER, NEMA 3R, W.P. DUPLEX RECEPTACLE, INTERIOR LIGHTING ALL FACTORY WIRED.

1.019 PROVIDE 3/4" X 10' COPPER GROUND ROD WITH 3/4"C. 1#2 COPPER GROUND CONDUCTOR FROM GROUND ROD TO FUEL TANK AND FUEL DISPENSER BONDED TO THE GROUND LUGS AT EACH LOCATION. VERIFY ACTUAL LOCATIONS WITH EQUIPMENT INSTALLER.

1.020 (2) 1"C. 3#8 & 1#10 GRD (POWER TO PUMPS)
(2) 1"C. 12#12 (FLOATS)
FROM PULL BOX TO PUMP CONTROL PANEL IN ROOM #A110. SEE SHEET E201A. CONNECT TO PUMP AND FLOAT WIRING AS REQUIRED.

1.021 1" C. WITH PUMP WIRING (POWER TO PUMPS)
1"C. WITH FLOAT WIRING (FLOATS)
COORDINATE WITH EQUIPMENT INSTALLER AND CONNECT AS REQUIRED.

IDENTIFICATION STAMP
DIV. OF THE STATE ARCHITECT
APP: 02-118630 INC:
REVIEWED FOR
SS ☐ FLS ☐ ACS ☑
DATE: 04/13/2021

OFFICE OF THE STATE FIRE MARSHAL
APPROVED FIRE AND PANIC ONLY
Approval of this plan does not authorize or approve any omission or deviation from applicable regulations. Final approval is subject to field inspection. One set of approved plans shall be available on the project site at all times.
PERMIT NO.: 20-N-2332-CP
REVIEWED BY: LEO CATALLO, OSFM
DATE: 4 / /2021

DGS GENERAL SERVICES
Department of General Services
State of California
Real Estate Services Division
Project Management & Development Branch
707 Third Street, Suite 4-105
West Sacramento, California 95605

NICHOLS MELBURG & ROSSETTO
ARCHITECTS + ENGINEERS
300 Knollcrest Drive
Redding, CA. 96002
(530) 222-3300 (530) 222-3538 FAX
http://www.nmrdesign.com

Copyright © 2019
All ideas, designs, arrangements and plans indicated or represented by this drawing are owned by, and the property of, NICHOLS, MELBURG and ROSSETTO and were created, evolved and developed for use on, and in connection with, the specified project. None of such ideas, designs, arrangements or plans shall be used by, or disclosed to, any person, firm or corporation for any purpose whatsoever without the written permission of NICHOLS, MELBURG and ROSSETTO.

LICENSE STAMPS

REGISTERED PROFESSIONAL ENGINEER RAYMOND W. SINGER No. E15610 12/31/2021 ELECTRICAL STATE OF CALIFORNIA
Date Signed: 3/25/2021

CONSULTANT
tk1sc COLLABORATIVE
11870 Pierce Street, Suite 160
Riverside, California 92505
951.299.4160 www.tk1sc.com
Project Leader - Jerry Leonhardt
Electrical Lead - Reid Cordry
tk1sc Job #:2019-0228A

DRAWING STATUS
CONSTRUCTION DOCUMENTS

ISSUE

No.	Date	Description
1	10/20/2020	INITIAL PLAN REVIEW
2	01/22/2021	AGENCY RESUBMITTAL
3	03/22/2021	AGENCY RESUBMITTAL

If drawing is not 30" x 42" it is a reduced print

PROJECT
RESIDENTIAL CENTER, UKIAH: REPLACEMENT OF EXISTING RESIDENTIAL CENTER
440 EAST HILL ROAD
WILLITS, CALIFORNIA 95490
MENDOCINO COUNTY
CALIFORNIA CONSERVATION CORP

Supervisor	Designed	Drawn
		Author

DSA Application No.
02-118630

SHEET TITLE
SITE PLAN - SOUTH

DGS Project Number: 0000000000001826
NMR Project Number: 18-6456

Reference North: NORTH
Sheet Scale: 12" = 1'-0"
Sheet Number: E020

ISSUE DATE
July 9, 2021

Plot Date: 3/22/2021 8:59:59 AM
File Name: BIM 360://CCC Willits Residential Center/E_CCC Willits_COMMON_2019-0228A.rvt

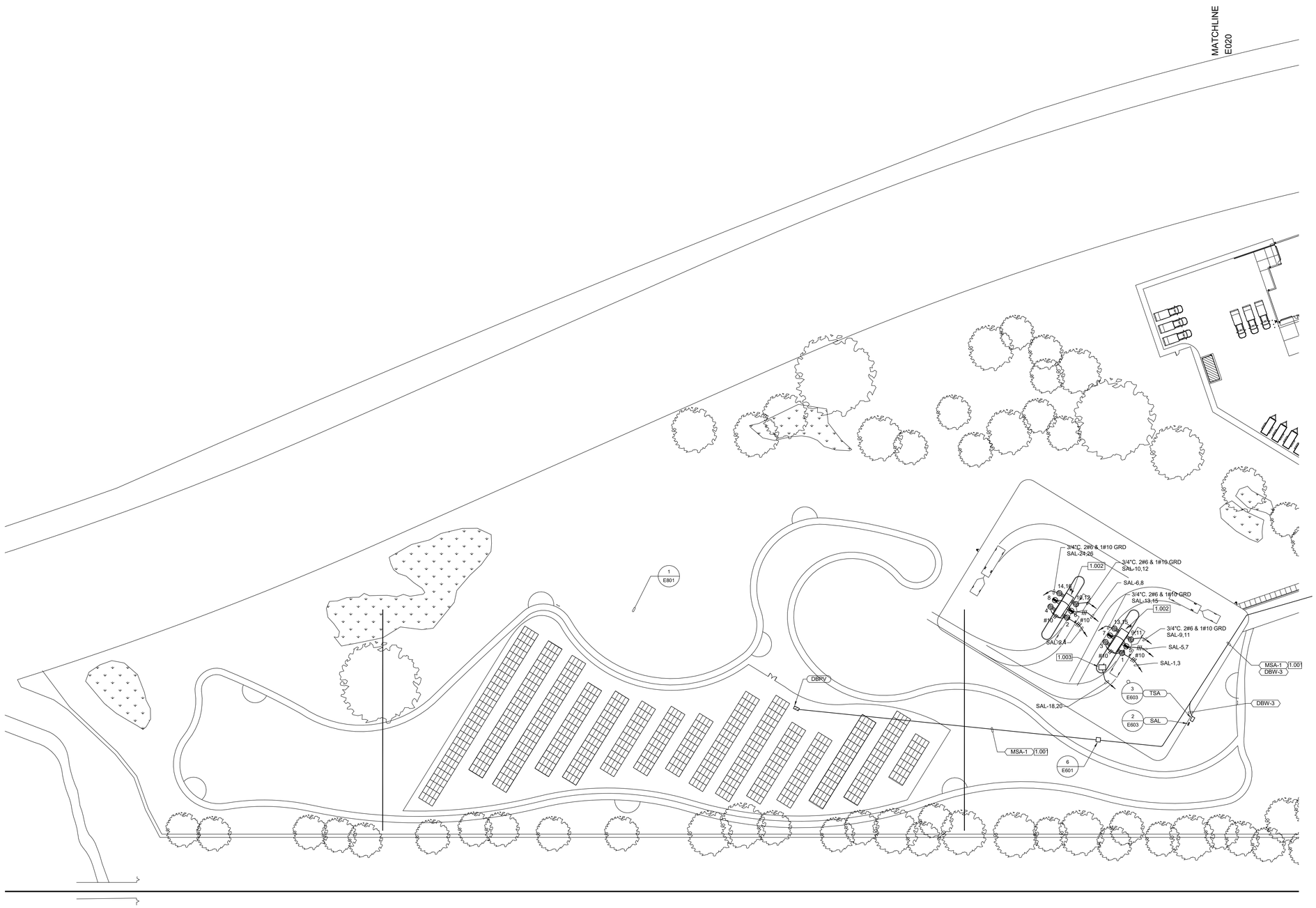

SITE PLAN GENERAL NOTES:

1. CONTRACTOR SHALL EXERCISE EXTREME CAUTION IN EXCAVATING AND TRENCHING ON THIS SITE TO AVOID EXISTING DUCTS, PIPING OR CONDUITS, ETC., AND TO PREVENT HAZARDS TO PERSONNEL AND/OR DAMAGE TO EXISTING UNDERGROUND UTILITIES OR STRUCTURES WHETHER OR NOT SHOWN AND INSTALLED BY ANY OTHER CONTRACTS. THE ENGINEER IS NOT RESPONSIBLE FOR THE LOCATION OF UNDERGROUND UTILITIES OR STRUCTURES WHETHER OR NOT SHOWN OR DETAILED AND INSTALLED BY ANY OTHER CONTRACTS. THE CONTRACTOR SHALL IMMEDIATELY NOTIFY THE ENGINEER SHOULD SUCH UNIDENTIFIED CONDITIONS BE DISCOVERED. THESE DRAWINGS AND SPECIFICATIONS DO NOT INCLUDE THE NECESSARY ELEMENTS FOR CONSTRUCTION SAFETY.
2. CALL UNDERGROUND SERVICE ALERT (USA) AT 1 (800) 422-4133 OR APPLICABLE STATE AND LOCAL DIG SAFE OR UNDERGROUND ALERT HOTLINES PRIOR TO CONSTRUCTION START.
3. MINIMUM CONDUIT SIZE SHALL BE 3/4" - U.O.N.
4. MINIMUM CONDUCTOR SIZE SHALL BE #10 AWG. - U.O.N.
5. ALL SITE BRANCH CIRCUITS SHALL INCLUDE AN EQUIPMENT GROUND CONDUCTOR THAT, AT MINIMUM, MATCHES THE SIZE OF THE ASSOCIATED BRANCH CIRCUIT CONDUCTOR. WHERE MULTIPLE BRANCH CIRCUITS ARE ROUTED/GROUPED TOGETHER, THE EQUIPMENT GROUNDING CONDUCTOR SHALL MATCH THE SIZE OF THE LARGEST BRANCH CIRCUIT CONDUCTOR IN THE GROUP.
6. ALL ELECTRICAL EQUIPMENT MOUNTED OUTDOORS SHALL BE WEATHERPROOF (NEMA #3R).
7. ALL CONDUIT ONLY SHALL BE PROVIDED WITH A NYLON PULL STRING.
8. SEE ARCHITECTURAL/LANDSCAPE ARCHITECTURAL PLANS FOR EXACT LOCATIONS OF FIXTURES, PULLBOXES, MANHOLES, OTHER ELECTRICAL DEVICES, ETC. COORDINATE ALL UNDERGROUND STRUCTURES AND CONDUIT ROUTING WITH LANDSCAPE ARCHITECT PRIOR TO ROUGH-IN TO ENSURE THAT SUCH ITEMS ARE NOT PLACED IN CRITICAL LANDSCAPE PLANTING/HARDSCAPE AREAS.
9. UNLESS SPECIFICALLY SHOWN AS (E), (R), (ER), (D), EXISTING OR NON-BOLD, ALL ELECTRICAL DEVICES SHOWN ARE NEW.
10. SEE DETAIL 8/E603 FOR CONDUIT BURIAL AND TRENCHING REQUIREMENTS.

REFERENCE NORTH / TRUE NORTH

ELECTRICAL SITE PLAN - NORTH

SCALE: 1" = 40'-0"

0' 20' 40' 80' 160'

PLAN NOTES:

1.001 PROVIDE (1) 4"C.O. SPARE.

1.002 EATON POWERHOUSE SS POWER PEDESTAL. PROVIDE WITH (2) 30A, 120V RECEPTACLES, (2) 50A, 208V, 1Ø, REEPTACLES, AND (2) 20A, 120V, GFCI RECEPTACLES.

1.003 GRINDER PUMP CONTROL PANEL. VERIFY EXACT LOCATION IN FIELD AND CONNECT AS REQUIRED.

IDENTIFICATION STAMP
DIV. OF THE STATE ARCHITECT
APP: 02-118630 INC:
REVIEWED FOR
SS ☐ FLS ☐ ACS ☑
DATE: 04/13/2021

OFFICE OF THE STATE FIRE MARSHAL
APPROVED FIRE AND PANIC ONLY
Approval of this plan does not authorize or approve any omission or deviation from applicable regulations. Final approval is subject to field inspection. One set of approved plans shall be available on the project site at all times.
PERMIT NO: 28 N 2332-CP
REVIEWED BY: LEO CATAYLO, OSFM
DATE: 4/1/2021

GENERAL SERVICES
Department of General Services
State of California
Real Estate Services Division
Project Management & Development Branch
707 Third Street, Suite 4-105
West Sacramento, California 95605

NICHOLS MELBURG & ROSSETTO
ARCHITECTS + ENGINEERS
300 Knollcrest Drive
Redding, CA. 96002
(530) 222-3300 (530) 222-3538 FAX
http://www.nmrdesign.com

Copyright © 2019
All ideas, designs, arrangements and plans indicated or represented by this drawing are owned by, and the property of, NICHOLS, MELBURG and ROSSETTO and were created, evolved and developed for use on, and in connection with, the specified project. None of such ideas, designs, arrangements or plans shall be used by, or disclosed to, any person, firm or corporation for any purpose whatsoever without the written permission of NICHOLS, MELBURG and ROSSETTO.

LICENSE STAMPS

REGISTERED PROFESSIONAL ENGINEER
RAYMOND W. SWIFT
No. E15610
12/31/2021
ELECTRICAL
STATE OF CALIFORNIA
Date Signed: 3/25/2021

CONSULTANT
tk1sc COLLABORATIVE
11870 Pierce Street, Suite 160
Riverside, California 92505
951.299.4160 www.tk1sc.com
Project Leader - Jerry Leonhardt
Electrical Lead - Reid Cordry
tk1sc Job #:2019-0228A

DRAWING STATUS
CONSTRUCTION DOCUMENTS

ISSUE

No.	Date	Description
1	10/20/2020	INITIAL PLAN REVIEW
2	01/22/2021	AGENCY RESUBMITTAL
3	03/22/2021	AGENCY RESUBMITTAL

If drawing is not 30" x 42" it is a reduced print

PROJECT
RESIDENTIAL CENTER, UKIAH: REPLACEMENT OF EXISTING RESIDENTIAL CENTER
440 EAST HILL ROAD
WILLITS, CALIFORNIA 95490
MENDOCINO COUNTY
CALIFORNIA CONSERVATION CORP

Supervisor	Designed	Drawn
		Author

DSA Application No.
02-118630

SHEET TITLE
SITE PLAN - NORTH

DGS Project Number	NMR Project Number
00000000001826	18-6456

Reference North: NORTH
Sheet Scale: 12" = 1'-0"
Sheet Number: E021

ISSUE DATE
July 9, 2021

Plot Date: 3/24/2021 9:15:24 AM
File Name: BIM 360://CCC Willits Residential Center/E_CCC Willits_COMMON_2019-0228A.rvt

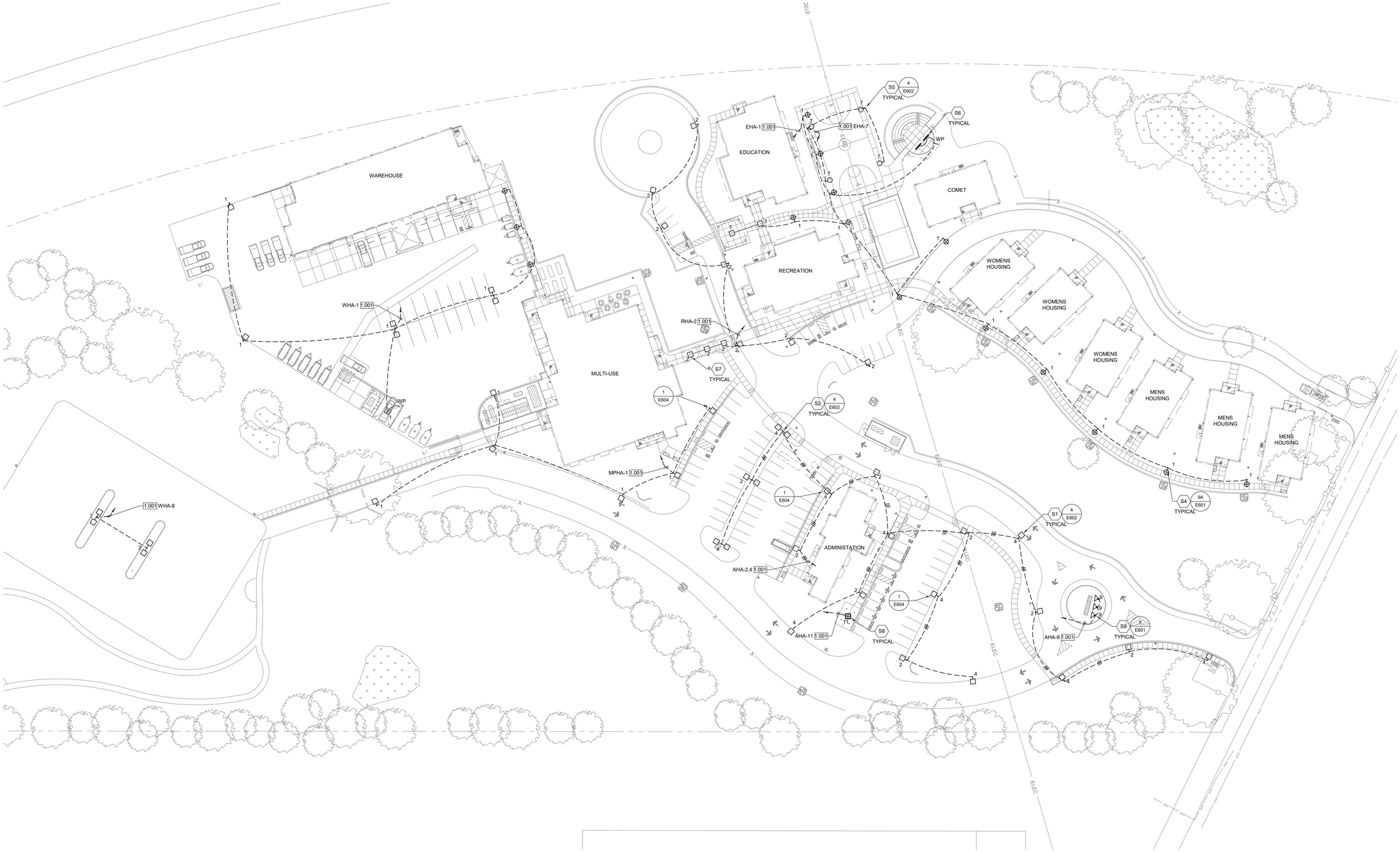

SITE PLAN GENERAL NOTES:

1. CONTRACTOR SHALL EXERCISE EXTREME CAUTION IN EXCAVATING AND TRENCHING ON THIS SITE TO AVOID EXISTING DUCTS, PIPING OR CONDUITS, ETC., AND TO PREVENT HAZARDS TO PERSONNEL AND/OR DAMAGE TO EXISTING UNDERGROUND UTILITIES OR STRUCTURES WHETHER OR NOT SHOWN AND INSTALLED BY ANY OTHER CONTRACTS. THE ENGINEER IS NOT RESPONSIBLE FOR THE LOCATION OF UNDERGROUND UTILITIES OR STRUCTURES WHETHER OR NOT SHOWN OR DETAILED AND INSTALLED BY ANY OTHER CONTRACTS. THE CONTRACTOR SHALL IMMEDIATELY NOTIFY THE ENGINEER SHOULD SUCH UNIDENTIFIED CONDITIONS BE DISCOVERED. THESE DRAWINGS AND SPECIFICATIONS DO NOT INCLUDE THE NECESSARY ELEMENTS FOR CONSTRUCTION SAFETY.
2. CALL UNDERGROUND SERVICE ALERT (USA) AT 1 (800) 422-4133 OR APPLICABLE STATE AND LOCAL DIG SAFE OR UNDERGROUND ALERT HOTLINES PRIOR TO CONSTRUCTION START.
3. MINIMUM CONDUIT SIZE SHALL BE 3/4" - U.O.N.
4. MINIMUM CONDUCTOR SIZE SHALL BE #10 AWG. - U.O.N.
5. ALL SITE BRANCH CIRCUITS SHALL INCLUDE AN EQUIPMENT GROUND CONDUCTOR THAT, AT MINIMUM, MATCHES THE SIZE OF THE ASSOCIATED BRANCH CIRCUIT CONDUCTOR. WHERE MULTIPLE BRANCH CIRCUITS ARE ROUTED/GROUPED TOGETHER, THE EQUIPMENT GROUNDING CONDUCTOR SHALL MATCH THE SIZE OF THE LARGEST BRANCH CIRCUIT CONDUCTOR IN THE GROUP.
6. ALL ELECTRICAL EQUIPMENT MOUNTED OUTDOORS SHALL BE WEATHERPROOF (NEMA #3R).
7. ALL CONDUIT ONLY SHALL BE PROVIDED WITH A NYLON PULL STRING.
8. SEE ARCHITECTURAL/LANDSCAPE ARCHITECTURAL PLANS FOR EXACT LOCATIONS OF FIXTURES, PULLBOXES, MANHOLES, OTHER ELECTRICAL DEVICES, ETC. COORDINATE ALL UNDERGROUND STRUCTURES AND CONDUIT ROUTING WITH LANDSCAPE ARCHITECT PRIOR TO ROUGH-IN TO ENSURE THAT SUCH ITEMS ARE NOT PLACED IN CRITICAL LANDSCAPE PLANTING/HARDSCAPE AREAS.
9. UNLESS SPECIFICALLY SHOWN AS (E), (R), (ER), (D), EXISTING OR NON-BOLD, ALL ELECTRICAL DEVICES SHOWN ARE NEW.
10. SEE DETAIL 8/E603 FOR CONDUIT BURIAL AND TRENCHING REQUIREMENTS.

REFERENCE NORTH / TRUE NORTH

SITE LIGHTING PLAN

SCALE: 1" = 40'-0"

0' 20' 40' 80' 160'

PLAN NOTES:

1.001 ROUTE CIRCUITS THROUGH ENERGY MANAGEMENT SYSTEM FOR CONTROL OF EXTERIOR LIGHTING.

IDENTIFICATION STAMP
DIV. OF THE STATE ARCHITECT
APP: 02-118630 INC:
REVIEWED FOR
SS ☐ FLS ☐ ACS ☑
DATE: 04/13/2021

OFFICE OF THE STATE FIRE MARSHAL
APPROVED FIRE AND PANIC ONLY
Approval of this plan does not authorize or approve any omission or deviation from applicable regulations. Final approval is subject to field inspection. One set of approved plans shall be available on the project site at all times.
PERMIT NO.: 20-N-2332-CP
REVIEWED BY: LEO CATAYLO, OSFM
DATE: 4 / /2021

DGS GENERAL SERVICES
Department of General Services
State of California
Real Estate Services Division
Project Management & Development Branch
707 Third Street, Suite 4-105
West Sacramento, California 95605

NICHOLS MELBURG & ROSSETTO ARCHITECTS + ENGINEERS
300 Knollcrest Drive
Redding, CA. 96002
(530) 222-3300 (530) 222-3538 FAX
http://www.nmrdesign.com

Copyright © 2019
All ideas, designs, arrangements and plans indicated or represented by this drawing are owned by, and the property of, NICHOLS, MELBURG and ROSSETTO and were created, evolved and developed for use on, and in connection with, the specified project. None of such ideas, designs, arrangements or plans shall be used by, or disclosed to any person, firm or corporation for any purpose whatsoever without the written permission of NICHOLS, MELBURG and ROSSETTO.

LICENSE STAMPS

REGISTERED PROFESSIONAL ENGINEER RAYMOND W. SWAFFORD No. E15610 12/31/2021 ELECTRICAL STATE OF CALIFORNIA
Date Signed: 3/25/2021

CONSULTANT
tk1sc COLLABORATIVE
11870 Pierce Street, Suite 160
Riverside, California 92505
951.299.4160 www.tk1sc.com
Project Leader - Jerry Leonhardt
Electrical Lead - Reid Cordry
tk1sc Job #:2019-0228A

DRAWING STATUS
CONSTRUCTION DOCUMENTS

ISSUE

No.	Date	Description
1	10/20/2020	INITIAL PLAN REVIEW
2	01/22/2021	AGENCY RESUBMITTAL
3	03/22/2021	AGENCY RESUBMITTAL

If drawing is not 30" x 42" it is a reduced print

PROJECT
RESIDENTIAL CENTER, UKIAH: REPLACEMENT OF EXISTING RESIDENTIAL CENTER
440 EAST HILL ROAD
WILLITS, CALIFORNIA 95490
MENDOCINO COUNTY
CALIFORNIA CONSERVATION CORP

Supervisor	Designed	Drawn
		Author

DSA Application No.
02-118630

SHEET TITLE
SITE LIGHTING PLAN

DGS Project Number: 0000000000001826
NMR Project Number: 18-6456

Reference North: NORTH
Sheet Scale: 12" = 1'-0"
Sheet Number: E022

ISSUE DATE
July 9, 2021

Plot Date: 3/25/2021 8:12:57 AM
File Name: B:\M\ 360\CCC Willits Residential Center\E_CCC Willits_COMMON_2019-0228A.rvt

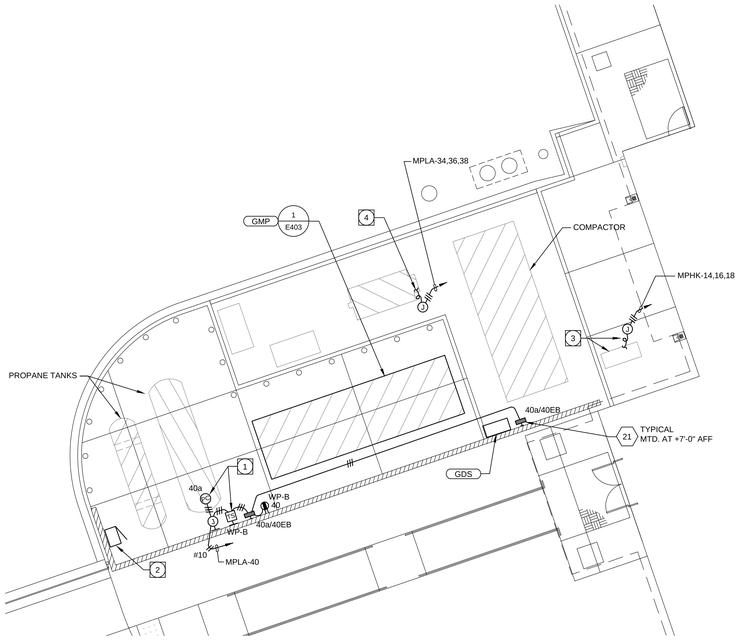

REFERENCE NORTH | TRUE NORTH

ENLARGED EQUIPMENT YARD 2

SCALE: 1/8"=1'-0"

GENERATOR YARD SPECIFIC PLAN NOTES:

1. EXTERIOR RATED, WALL MOUNTED, 120V, 15A, PHOTOSENSOR WITH SWIVEL ARM (INTERMATIC #K4136M & #K42-SWA OR EQUAL). MOUNT AT ELEVATION MIN. 6" ABOVE ADJACENT LIGHT FIXTURES. ROUTE SWITCHED PHOTOCELL OUTPUT THROUGH A 120V, 20A, MECHANICAL TIME SWITCH WITH 4 HOUR TIME CYCLE - NO HOLD (INTERMATIC #FD4HW OR EQUAL) MOUNTED UNDER A RAINTITE WHILE IN-USE COVER.
2. FIRE EXTINGUISHER AND CABINET. SEE GENERATOR SPECIFICATIONS.
3. COMPACTOR REMOTE POWER UNIT. CONNECT AS REQUIRED.
4. COMPOSTER. CONNECT AS REQUIRED.

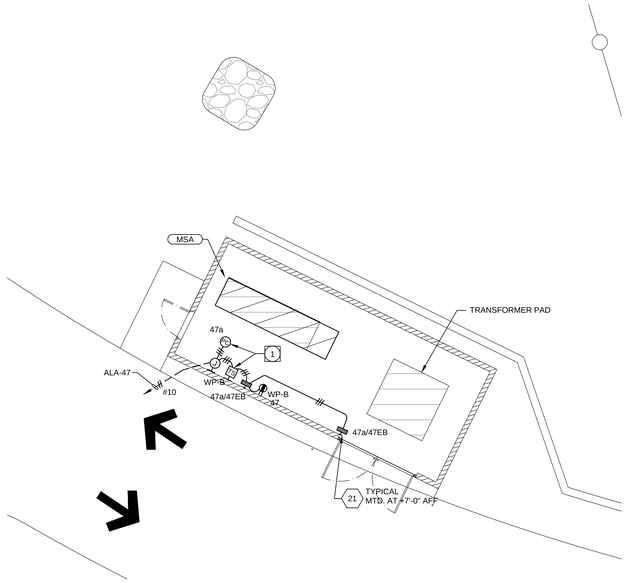

REFERENCE NORTH | TRUE NORTH

ENLARGED ELECTRICAL UTILITY YARD 1

SCALE: 1/8"=1'-0"

ELECTRICAL UTILITY YARD SPECIFIC PLAN NOTES:

1. EXTERIOR RATED, WALL MOUNTED, 120V, 15A, PHOTOSENSOR WITH SWIVEL ARM (INTERMATIC #K4136M & #K42-SWA OR EQUAL). MOUNT AT ELEVATION MIN. 6" ABOVE ADJACENT LIGHT FIXTURES. ROUTE SWITCHED PHOTOCELL OUTPUT THROUGH A 120V, 20A, MECHANICAL TIME SWITCH WITH 4 HOUR TIME CYCLE - NO HOLD (INTERMATIC #FD4HW OR EQUAL) MOUNTED UNDER A RAINTITE WHILE IN-USE COVER.

SITE PLAN GENERAL NOTES:

1. CONTRACTOR SHALL EXERCISE EXTREME CAUTION IN EXCAVATING AND TRENCHING ON THIS SITE TO AVOID EXISTING DUCTS, PIPING OR CONDUITS, ETC., AND TO PREVENT HAZARDS TO PERSONNEL AND/OR DAMAGE TO EXISTING UNDERGROUND UTILITIES OR STRUCTURES WHETHER OR NOT SHOWN AND INSTALLED BY ANY OTHER CONTRACTS. THE ENGINEER IS NOT RESPONSIBLE FOR THE LOCATION OF UNDERGROUND UTILITIES OR STRUCTURES WHETHER OR NOT SHOWN OR DETAILED AND INSTALLED BY ANY OTHER CONTRACTS. THE CONTRACTOR SHALL IMMEDIATELY NOTIFY THE ENGINEER SHOULD SUCH UNIDENTIFIED CONDITIONS BE DISCOVERED. THESE DRAWINGS AND SPECIFICATIONS DO NOT INCLUDE THE NECESSARY ELEMENTS FOR CONSTRUCTION SAFETY.
2. CALL UNDERGROUND SERVICE ALERT (USA) AT 1 (800) 422-4133 OR APPLICABLE STATE AND LOCAL DIG SAFE OR UNDERGROUND ALERT HOTLINES PRIOR TO CONSTRUCTION START.
3. MINIMUM CONDUIT SIZE SHALL BE 3/4" - U.O.N.
4. MINIMUM CONDUCTOR SIZE SHALL BE #10 AWG. - U.O.N.
5. ALL SITE BRANCH CIRCUITS SHALL INCLUDE AN EQUIPMENT GROUND CONDUCTOR THAT, AT MINIMUM, MATCHES THE SIZE OF THE ASSOCIATED BRANCH CIRCUIT CONDUCTOR. WHERE MULTIPLE BRANCH CIRCUITS ARE ROUTED/GROUPED TOGETHER, THE EQUIPMENT GROUNDING CONDUCTOR SHALL MATCH THE SIZE OF THE LARGEST BRANCH CIRCUIT CONDUCTOR IN THE GROUP.
6. ALL ELECTRICAL EQUIPMENT MOUNTED OUTDOORS SHALL BE WEATHERPROOF (NEMA #3R).
7. ALL CONDUIT ONLY SHALL BE PROVIDED WITH A NYLON PULL STRING.
8. SEE ARCHITECTURAL/LANDSCAPE ARCHITECTURAL PLANS FOR EXACT LOCATIONS OF FIXTURES, PULLBOXES, MANHOLES, OTHER ELECTRICAL DEVICES, ETC. COORDINATE ALL UNDERGROUND STRUCTURES AND CONDUIT ROUTING WITH LANDSCAPE ARCHITECT PRIOR TO ROUGH-IN TO ENSURE THAT SUCH ITEMS ARE NOT PLACED IN CRITICAL LANDSCAPE PLANTING/HARDSCAPE AREAS.
9. UNLESS SPECIFICALLY SHOWN AS (E), (R), (ER), (D), EXISTING OR NON-BOLD, ALL ELECTRICAL DEVICES SHOWN ARE NEW.

Plot Date: 3/22/2021 8:59:43 AM
File Name: BIM 360://CCC Willits Residential Center/E_CCC Willits_COMMON_2019-0228A.rvt

IDENTIFICATION STAMP
DIV. OF THE STATE ARCHITECT
APP: 02-118630 INC:
REVIEWED FOR
SS ☐ FLS ☐ ACS ☑
DATE: 04/13/2021

OFFICE OF THE STATE FIRE MARSHAL
APPROVED FIRE AND PANIC ONLY
Approval of this plan does not authorize or approve any omission or deviation from applicable regulations. Final approval is subject to field inspection. One set of approved plans shall be available on the project site at all times.
PERMIT NO.: 20-N-2332-CP
REVIEWED BY: LEO CATALLO, OSFM
DATE: 4 / 1 /2021

GENERAL SERVICES
Department of General Services
State of California
Real Estate Services Division
Project Management & Development Branch
707 Third Street, Suite 4-105
West Sacramento, California 95605

NICHOLS MELBURG & ROSSETTO
ARCHITECTS + ENGINEERS
300 Knollcrest Drive
Redding, CA. 96002
(530) 222-3300 (530) 222-3538 FAX
http://www.nmrdesign.com

Copyright © 2019
All ideas, designs, arrangements and plans indicated or represented by this drawing are owned by, and the property of, NICHOLS, MELBURG and ROSSETTO and were created, evolved and developed for use on, and in connection with, the specified project. None of such ideas, designs, arrangements or plans shall be used by, or disclosed to, any person, firm or corporation for any purpose whatsoever without the written permission of NICHOLS, MELBURG and ROSSETTO.

LICENSE STAMPS

REGISTERED PROFESSIONAL ENGINEER
RAYMOND W. SINGER
No. E15610
12/31/2021
ELECTRICAL
STATE OF CALIFORNIA
Date Signed:
3/25/2021

CONSULTANT
tk1sc
COLLABORATIVE
11870 Pierce Street, Suite 160
Riverside, California 92505
951.299.4160 www.tk1sc.com
Project Leader - Jerry Leonhardt
Electrical Lead - Reid Cordry
tk1sc Job #:2019-0228A

DRAWING STATUS
CONSTRUCTION DOCUMENTS

ISSUE

No.	Date	Description
1	10/20/2020	INITIAL PLAN REVIEW
2	01/22/2021	AGENCY RESUBMITTAL
3	03/22/2021	AGENCY RESUBMITTAL

If drawing is not 30" x 42" it is a reduced print

PROJECT
RESIDENTIAL CENTER, UKIAH: REPLACEMENT OF EXISTING RESIDENTIAL CENTER
440 EAST HILL ROAD
WILLITS, CALIFORNIA 95490
MENDOCINO COUNTY
CALIFORNIA CONSERVATION CORP

Supervisor	Designed	Drawn
		Author

DSA Application No.
02-118630

SHEET TITLE
ENLARGED SITE PLANS

DGS Project Number	NMR Project Number
000000000001826	18-6456

Reference North | Sheet Scale

Sheet Number
E023

ISSUE DATE
July 9, 2021

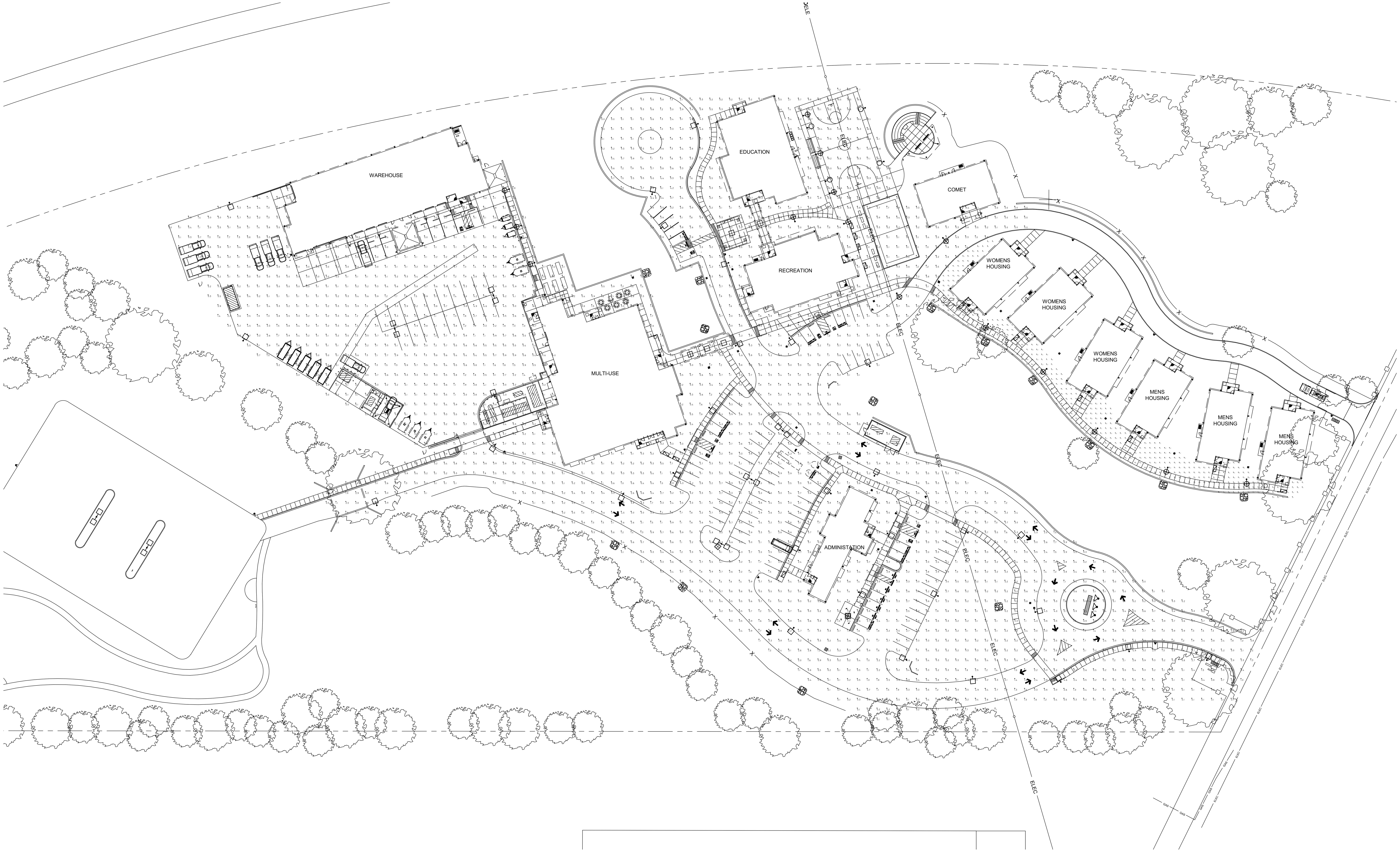

REFERENCE NORTH

TRUE NORTH

SITE LIGHTING PHOTOMETRIC PLAN

SCALE: 1" = 40'-0"

LEGEND OF BUG CALLOUT RATINGS:

DISTANCE	0'-0"		
HEIGHT	0'-0"		
RATIO	1:1		
	B	U	G
ALLOWED	--	--	--
PROPOSED	--	--	--

- THIS ROW INDICATES THE FIXTURE DISTANCE TO PROPERTY LINE.
- THIS ROW INDICATES THE FIXTURE MOUNTING HEIGHT.
- THIS ROW INDICATES THE DISTANCE-TO-HEIGHT RATIO.
- THIS ROW IS THE CALGREEN ALLOWED BUG RATING FOR THE DISTANCE-TO-HEIGHT RATIO. SEE THE "CALGREEN ALLOWABLE BACKLIGHT, UPLIGHT AND GLARE (BUG) RATING" TABLE ON THIS SHEET FOR MORE INFORMATION.
- THIS ROW IS THE PROPOSED BUG RATING FOR THE FIXTURE AT THIS LOCATION.

CALGREEN MAXIMUM ALLOWABLE BACKLIGHT, UPLIGHT AND GLARE (BUG) RATINGS (SEE NOTE A)

RATING DESCRIPTIONS	FIXTURE LOCATION (MULTIPLES OF HEIGHT FROM PROPERTY LINE)	LIGHTING ZONE			
		LZ1	LZ2	LZ3	LZ4
BACKLIGHT RATING	> 2 (SITE FIXTURES)	No Limit	No Limit	No Limit	No Limit
	> 1 BUT <= 2 (SITE FIXTURES)	B2	B3	B4	B4
	>= 0.5 BUT <= 1 (SITE FIXTURES)	B1	B2	B3	B3
	< 0.5 STREET ADJACENT (SITE FIXTURES) (SEE NOTE B)	B0	B1	B2	B3
	< 0.5 (SITE FIXTURES)	B0	B0	B1	B2
UPLIGHTING RATING	FOR AREA LIGHTING (SEE NOTE D)	U0	U0	U0	U0
	FOR OTHER OUTDOOR LIGHTING, INCLUDING DECORATIVE	U1	U2	U3	U4
GLARE RATING	> 2 (BUILDING MOUNTED) (SEE NOTE C)	G1	G2	G3	G4
	> 1 BUT <= 2 (BUILDING MOUNTED) (SEE NOTE C)	G0	G1	G1	G2
	>= 0.5 BUT <= 1 (BUILDING MOUNTED) (SEE NOTE C)	G0	G0	G1	G1
	< 0.5 (BUILDING MOUNTED) (SEE NOTE C)	G0	G0	G0	G1

NOTE A: IESNA LIGHTING ZONES LZ0 AND LZ5 ARE NOT APPLICABLE.

NOTE B: CENTERLINE OF PUBLIC ROADWAY / TRANSIT LINE IS ACCEPTABLE.

NOTE C: BUILDING MOUNTED LUMINAIRES THAT CANNOT BE MOUNTED WITH THEIR BACKLIGHT TO THE PROPERTY LINE SHALL MEET THE ALLOWED GLARE RATING FOR ALL LUMINAIRES. LIGHT FROM A BUILDING MOUNTED LUMINAIRE SHALL NOT EXCEED THE BACKLIGHT RATING IN THE DIRECTION OF THE PROPERTY LINE.

NOTE D: GENERAL LIGHTING LUMINAIRES IN AREAS SUCH AS OUTDOOR PARKING, SALES OR STORAGE LOTS SHALL MEET THESE REDUCED RATINGS. DECORATIVE LUMINAIRES LOCATED IN THESE AREAS SHALL MEET U-VALUE LIMITS FOR "ALL OTHER OUTDOOR LIGHTING".

Luminaire Schedule

Symbol	Qty	Label	Arrangement	Description	BUG Rating
	28	S1	SINGLE	Cooper McGraw Edison GLEON-SA2C-830-U-T4W	B2-U0-G2
	5	S2	BACK-BACK	Cooper McGraw Edison GLEON-SA2C-830-U-T4W	B2-U0-G2
	15	S4	SINGLE	Cooper McGraw Edison GPC-SA1C-830-U-T2	B1-U0-G2
	4	S5	SINGLE	Cooper McGraw Edison GLEON-SA7C-830-U-T4FT	B3-U0-G5
	3	S7	SINGLE	Rayon T720LED	B2-U0-G1
	77	Type 16	SINGLE	Cooper Halo Commercial PD615D010B- PDM6B835-61VC	B2-U0-G0
	3	Type21	SINGLE	Cooper McGraw Edison IST-SA1B-830-U-T3	B1-U0-G1

Calculation Summary

Label	CalcType	Units	Avg	Max	Min	Avg/Min	Max/Min
Housing Area	Illuminance	Fc	2.57	25.2	0.0	N.A.	N.A.
Site	Illuminance	Fc	2.25	53.5	0.0	N.A.	N.A.

IDENTIFICATION STAMP
DIV. OF THE STATE ARCHITECT
APP: 02-118630 INC:
REVIEWED FOR
SS ☐ FLS ☐ ACS ☑
DATE: 04/13/2021

OFFICE OF THE STATE FIRE MARSHAL
APPROVED FIRE AND PANIC ONLY
Approval of this plan does not authorize or approve any omission or deviation from applicable regulations. Final approval is subject to field inspection. One set of approved plans shall be available on the project site at all times.
PERMIT NO.: 20-N-2332-CP
REVIEWED BY: LITO CATAYLO, OSFM
DATE: 4/ 1 /2021

DGS GENERAL SERVICES
Department of General Services
State of California
Real Estate Services Division
Project Management & Development Branch
707 Third Street, Suite 4-105
West Sacramento, California 95605

NM&R
NICHOLS MELBURG & ROSSETTO
ARCHITECTS + ENGINEERS
300 Knollcrest Drive
Redding, CA. 96002
(530) 222-3300 (530) 222-3538 FAX
http://www.nmrdesign.com

Copyright © 2019
All ideas, designs, arrangements and plans indicated or represented by this drawing are owned by, and the property of, NICHOLS, MELBURG and ROSSETTO and were created, evolved and developed for use on, and in conjunction with, the specified project. None of such ideas, designs, arrangements or plans shall be used by, or disclosed to any person, firm or corporation for any purpose whatsoever without the written permission of NICHOLS, MELBURG and ROSSETTO.

LICENSE STAMPS
REGISTERED PROFESSIONAL ENGINEER RAYMOND W. SWARTZ No. E15610 Exp. 12/31/2021 ELECTRICAL STATE OF CALIFORNIA
Date Signed: 3/25/2021

CONSULTANT
tk1sc COLLABORATIVE
11870 Pierce Street, Suite 160
Riverside, California 92505
951.299.4160 www.tk1sc.com
Project Leader - Jerry Leonhardt
Electrical Lead - Reid Cordry
tk1sc Job #:2019-0228A

DRAWING STATUS
CONSTRUCTION DOCUMENTS

ISSUE

No.	Date	Description
1	10/20/2020	INITIAL PLAN REVIEW
2	01/22/2021	AGENCY RESUBMITTAL
3	03/22/2021	AGENCY RESUBMITTAL

If drawing is not 30" x 42" it is a reduced print

PROJECT
RESIDENTIAL CENTER, UKIAH: REPLACEMENT OF EXISTING RESIDENTIAL CENTER
440 EAST HILL ROAD
WILLITS, CALIFORNIA 95490
MENDOCINO COUNTY
CALIFORNIA CONSERVATION CORP

Supervisor	Designed	Drawn
		Author

DSA Application No.
02-118630

SHEET TITLE
SITE LIGHTING PHOTOMETRIC PLAN

DGS Project Number 000000000001826
NMR Project Number 18-6456

Reference North: NORTH
Sheet Scale
Sheet Number E024

ISSUE DATE
July 9, 2021

Plot Date: 3/25/2021 8:12:59 AM
File Name: BIM 360://CCC Willits Residential Center/E_CCC Willits_COMMON_2019-0228A.rvt

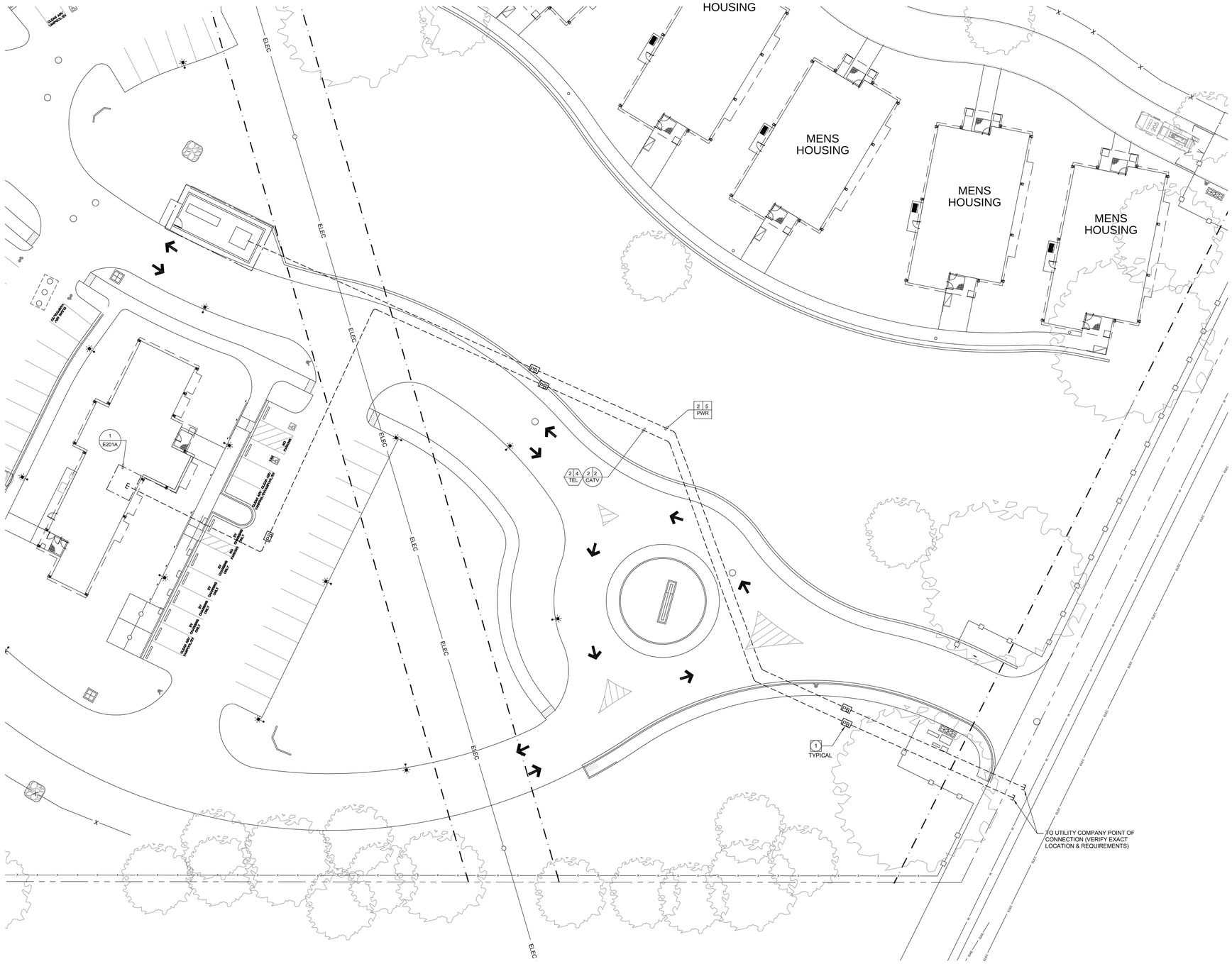

LEGEND OF CONDUIT SYMBOLS

NO. OF CONDUIT REQUIRED — PWR — SIZE OF CONDUIT
PWR = UTILITY COMPANY POWER CONDUIT SYMBOL.
GEN = GENERATOR CONDUIT SYMBOL.
ATS = ATS CONDUIT SYMBOL.

NO. OF CONDUIT REQUIRED — CATV — SIZE OF CONDUIT
UTILITY COMPANY CABLE TV CONDUIT SYMBOL.

NO. OF CONDUIT REQUIRED — TEL — SIZE OF CONDUIT
UTILITY COMPANY TELEPHONE CONDUIT SYMBOL.

REFERENCE NORTH

TRUE NORTH

ELECTRICAL SITE UTILITY PLAN

SCALE: 1" = 20'-0"

0' 10' 20' 40' 80'

SPECIFIC PLAN NOTES:

1 PULLBOXES TO BE PROVIDED AND LOCATED PER UTILITY COMPANY REQUIREMENTS.

SITE UTILITY PLAN CONSTRUCTION NOTES:

THESE NOTES ESTABLISH MINIMUM QUALITY LEVELS AND COORDINATION REQUIREMENTS. RESPECTIVE UTILITY COMPANY PLANS AND REQUIREMENTS TAKE PRECEDENCE OVER THESE NOTES WITH REGARD TO RESPECTIVE UTILITY COMPANY CONDUIT AND UNDERGROUND STRUCTURE SYSTEMS.

1. CALL UNDERGROUND SERVICE ALERT (USA) AT (800) 422-4133 OR APPLICABLE STATE AND LOCAL DIG SAFE OR UNDERGROUND ALERT HOTLINES PRIOR TO CONSTRUCTION START.
2. COORDINATE ALL UNDERGROUND STRUCTURES AND CONDUIT ROUTING WITH LANDSCAPE ARCHITECT PRIOR TO ROUGH-IN TO ENSURE THAT SUCH ITEMS ARE NOT PLACED IN CRITICAL LANDSCAPE PLANTING/HARDSCAPE AREAS.
3. VAULTS, MAINTENANCE HOLES (MH's), FORMERLY KNOWN AS MANHOLES, AND CONDUITS SHALL MAINTAIN A MINIMUM COVER OF 24" BELOW FINAL SURFACE AT ALL CONDITIONS. INCLUDE ALL COSTS IN BASE BID TO MEET UTILITY COMPANY REQUIREMENTS WHICH MAY REQUIRE GREATER MINIMUM CONDUIT DEPTHS.
4. VAULTS, MH's AND PULLBOXES (PB's) SHALL BE EQUIPPED WITH KNOCKOUT PANELS OR PRE-CAST INDIVIDUAL CONDUIT OPENINGS. CONDUITS SHALL ONLY ENTER AND EXIT ON END/SHORT WALLS. CONDUITS MAY NOT ENTER AND EXIT ON SIDE/LONG WALLS, CEILINGS OR FLOORS UNLESS OTHERWISE NOTED.
5. CUT DUCTS FLUSH WITH INTERIOR VAULT/MH/PB WALL.
6. GROUT AROUND DUCT ENTRANCES ON VAULT/MH/PB WALLS.
7. SLURRY BACKFILL AROUND DUCTS WITHIN 5 FEET OF VAULT/MH/PB TO PREVENT SHEARING.
8. CONDUITS PASSING UNDER THE BUILDING PERIMETER SHALL BE ENCASED IN LIGHTWEIGHT CONCRETE OR WATER-IMPERVIOUS CLAY TO PREVENT WATER INFILTRATION. SEE ELECTRICAL SPECIFICATIONS FOR ADDITIONAL INFORMATION.
9. CONDUIT BEND RADIUS FOR BUILDING ENTRANCES AND AT POLES SHALL BE A MINIMUM OF 24" FOR CONDUITS WITH LESS THAN 2" INTERNAL DIAMETER AND A MINIMUM OF 48" FOR CONDUITS WITH MORE THAN 2" INTERNAL DIAMETER.
10. PREFERRED CONDUIT SWEEP RADIUS BETWEEN VAULTS IS 25 FEET. UNDER NO CIRCUMSTANCES SHALL THE CONDUIT SWEEP RADIUS BE LESS THAN 12.5 FEET. MAXIMUM OF 90 DEGREES PER SWEEP AND LIMITED TO NO MORE THAN (2) 90 DEGREE SWEEPS BETWEEN VAULTS.
11. VAULTS/MH's/PB's ARE TO BE EQUIPPED WITH RACKING, GROUNDING LUGS, AND BOLT-DOWN LIDS UNLESS OTHERWISE NOTED.
12. VAULTS AND MH's TO BE EQUIPPED WITH ROUND COVERS, EXTENSION RINGS AS REQUIRED, LADDERS AND (3) SEGMENTS OF 6 FOOT HIGH CABLE RACKING PER EACH LONG WALL.
13. LABEL ALL NON-UTILITY COMMUNICATION VAULT/MH/PB COVERS WITH "COMMUNICATIONS" UNLESS OTHERWISE NOTED ON PLANS.
14. COORDINATE FINAL VAULT/MH/PB OPENING HEIGHT WITH G.C. PRIOR TO ROUGH-IN TO ENSURE FINAL GRADE DOES NOT SLOPE INTO VAULT/MH/PB OPENING.
15. CONTRACTOR TO PROVIDE A MINIMUM OF 8" DEEP COMPACTED 1/2" DIAMETER GRAVEL, UNDER ALL VAULTS, MH's OR PB's TO ENSURE UNIFORM DISTRIBUTION OF SOIL PRESSURE ON THE FLOOR AND BE ABLE TO DISSIPATE WATER OUT OF THE VAULT, MH OR PB.
16. ALL VAULTS/MH's/PB's WITHOUT GROUNDING LUGS SHALL HAVE AN 8' x 3/4" COPPER GROUND ROD DRIVEN THRU THE FLOOR TO ALLOW GROUNDING OF ITEMS WITHIN.
17. ALL VAULTS/MH's/PB's SHALL BE PROVIDED WITH TRAFFIC RATED COVERS WHEN LOCATED IN PAVED AREAS UTILIZED FOR VEHICLE TRAFFIC.
18. IF THE WATER OR MOISTURE BARRIER ON OR NEAR THE FOUNDATION OF A BUILDING IS DISTURBED IN ANY MANNER BY EXCAVATION OR OTHER CONSTRUCTION WORK, THE MOISTURE BARRIER MUST BE REPAIRED FOLLOWING THE RECOMMENDATIONS OF THE MANUFACTURER OF THE ORIGINAL BARRIER PRODUCT.
19. THE CONTRACTOR SHALL INCLUDE IN BASE BID ALL COSTS TO COMPLY WITH ALL REQUIREMENTS FOR CONFINED SPACE ENTRY PER THE OSHA REQUIREMENTS 29 CFR-1910.146, 29 CFR-1910.268, ETC. DURING ANY CONFINED SPACE ENTRY.
20. ANY DUCTS LEAVING A VAULT, MH OR PB ROUTED INTO A FACILITY SHALL BE PLUGGED AT EACH END USING REMOVABLE MECHANICAL PLUGS DESIGNED TO PREVENT WATER AND GAS FROM ENTERING THE FACILITY.
21. SEE ELECTRICAL SPECIFICATIONS AND PLAN DETAILS FOR ADDITIONAL REQUIREMENTS REGARDING UNDERGROUND CONDUITS AND IN-GRADE VAULT/MH/PB/JUNCTION BOXES.

SITE UTILITY PLAN NOTES:

1. UTILITY POINTS OF SERVICE AND WORK/MATERIAL SHOWN ARE BASED UPON PRELIMINARY INFORMATION ONLY BY THE UTILITY COMPANIES AND ARE FOR BID PURPOSES ONLY.
2. CONTRACTOR SHALL COORDINATE WITH UTILITY COMPANY FOR FINAL AND EXACT WORK/MATERIAL REQUIREMENTS AND CONSTRUCT TO UTILITY COMPANY ENGINEERING PLANS AND SPECIFICATIONS ONLY. CONTRACTOR SHALL FURNISH AND INSTALL ALL CONDUIT, PULL WIRES, CABLES, PULLBOXES, CONCRETE ENCASEMENT OF CONDUITS, TRANSFORMER PAD, BARRIERS, POLE RISERS, TRENCHING AND BACKFILL, AND PAY ALL UTILITY CO. FEES AND INCLUDE ALL REQUIREMENTS IN SCOPE OF WORK.
3. LOCATIONS OF UTILITIES SHOWN ARE APPROXIMATE AND CONTRACTOR SHALL EXERCISE EXTREME CAUTION IN EXCAVATING AND TRENCHING ON THIS SITE TO AVOID EXISTING DUCTS, PIPING, OR CONDUITS, ETC., AND TO PREVENT HAZARD TO PERSONNEL AND/OR DAMAGE TO EXISTING UNDERGROUND UTILITIES OR STRUCTURES WHETHER OR NOT SHOWN AND INSTALLED BY ANY OTHER CONTRACTS. THE ENGINEER IS NOT RESPONSIBLE FOR THE LOCATION OF UNDERGROUND UTILITIES OR STRUCTURES WHETHER OR NOT SHOWN OR DETAILED AND INSTALLED BY ANY OTHER CONTRACTS. THE CONTRACTOR SHALL IMMEDIATELY NOTIFY THE ENGINEER SHOULD SUCH UNIDENTIFIED CONDITIONS BE DISCOVERED. THESE DRAWINGS AND SPECIFICATIONS DO NOT INCLUDE THE NECESSARY ELEMENTS FOR CONSTRUCTION SAFETY.
4. UNLESS SPECIFICALLY SHOWN AS (E), (R), (ER), (D), EXISTING OR NON-BOLD, ALL ELECTRICAL DEVICES SHOWN ARE NEW.

5. UTILITY CONTACTS:

POWER:
PG&E
UKIAH, CA 95482
ATTN: STERLING WRIGHT
M# (707) 291-0673
EM: SCWG@PGE.COM

TELEPHONE:
AT&T
MENDOCINO COUNTY
O# (707) 468-2676
M# (707) 391-0172
EM: BS3124@ATT.COM

IDENTIFICATION STAMP
DIV. OF THE STATE ARCHITECT
APP: 02-118630 INC:
REVIEWED FOR
SS ☐ FLS ☐ ACS ☑
DATE: 04/13/2021

OFFICE OF THE STATE FIRE MARSHAL
APPROVED FIRE AND PANIC ONLY
Approval of this plan does not authorize or approve any omission or deviation from applicable regulations. Final approval is subject to field inspection. One set of approved plans shall be available on the project site at all times.
PERMIT NO: 28-N-2332-CP
REVIEWED BY: LEO CATAYLO, OSFM
DATE: 4/ /2021

DGS GENERAL SERVICES
Department of General Services
State of California
Real Estate Services Division
Project Management & Development Branch
707 Third Street, Suite 4-105
West Sacramento, California 95605

NICHOLS MELBURG & ROSSETTO
ARCHITECTS + ENGINEERS
300 Knollcrest Drive
Redding, CA. 96002
(530) 222-3300 (530) 222-3538 FAX
http://www.nmrdesign.com

Copyright © 2019
All ideas, designs, arrangements and plans indicated or represented by this drawing are owned by, and the property of, NICHOLS, MELBURG and ROSSETTO and were created, evolved and developed for use on, and in connection with, the specified project. None of such ideas, designs, arrangements or plans shall be used by, or disclosed to, any person, firm or corporation for any purpose whatsoever without the written permission of NICHOLS, MELBURG and ROSSETTO.

LICENSE STAMPS

REGISTERED PROFESSIONAL ENGINEER RAYMOND W. SWOPE No. E15610 12/31/2021 ELECTRICAL STATE OF CALIFORNIA
Date Signed: 3/25/2021

CONSULTANT
tk1sc COLLABORATIVE
11870 Pierce Street, Suite 160
Riverside, California 92505
951.299.4160 www.tk1sc.com
Project Leader - Jerry Leonhardt
Electrical Lead - Reid Cordry
tk1sc Job #:2019-0228A

DRAWING STATUS
CONSTRUCTION DOCUMENTS

ISSUE

No.	Date	Description
1	10/20/2020	INITIAL PLAN REVIEW
2	01/22/2021	AGENCY RESUBMITTAL
3	03/22/2021	AGENCY RESUBMITTAL

If drawing is not 30" x 42" it is a reduced print

PROJECT
RESIDENTIAL CENTER, UKIAH: REPLACEMENT OF EXISTING RESIDENTIAL CENTER
440 EAST HILL ROAD
WILLITS, CALIFORNIA 95490
MENDOCINO COUNTY
CALIFORNIA CONSERVATION CORP

Supervisor	Designed	Drawn
		Author

DSA Application No.
02-118630

SHEET TITLE
ENLARGED SITE UTILITY PLAN

DGS Project Number	NMR Project Number
000000000001826	18-6456

Reference North: NORTH
Sheet Scale: 12" = 1'-0"
Sheet Number: E030

ISSUE DATE
July 9, 2021

Plot Date: 3/22/2021 8:59:45 AM
File Name: BIM 360://CCC Willits Residential Center/E_CCC Willits_COMMON_2019-0228A.rvt

ADMINISTRATION BUILDING LIGHTING PLAN

SCALE: 1/8" = 1'-0"

KEYNOTES

2.019 CONNECT TO MOTORIZED SHADES AS REQUIRED. PROVIDE ALL J-BOXES, LOW VOLTAGE AND LINE VOLTAGE CONTROLS, CONDUIT, CONDUCTORS, SIZED AND INSTALLED PER MOTORIZED SHADE MANUFACTURER'S REQUIREMENTS FOR A COMPLETE AND OPERABLE SYSTEM. COORDINATE INSTALLATION REQUIREMENTS WITH SHADE INSTALLER PRIOR TO ROUGH-IN.

3.001 RECEPTACLE, SWITCH, AND LIGHT FIXTURE MOUNTED ABOVE CEILING. PROVIDE A KEYLESS PLASTIC LAMP HOLDER LEVITON #R50-08829-CW4, OR EQUAL, MOUNTED ON A JUNCTION BOX WITH ONE LED A19 9W LAMP. COORDINATE AND VERIFY EXACT MOUNTING LOCATION IN FIELD WITH MECHANICAL EQUIPMENT INSTALLER PRIOR TO ROUGH IN.

VOLTAGE DROP WORKSHEET: REFERENCE ONLY

1. ALL BRANCH CIRCUITS ARE DESIGNED TO LIMIT VOLTAGE DROP 3% OR LESS USING THE FOLLOWING CRITERIA:

208 VOLT, 1 PHASE LOAD:

LOAD (VA)	DISTANCE	CU CONDUCTOR SIZE
0-1000 VA (500 PER PHASE) 0-4.8 AMPS	0-225 FT	#12
	226-360 FT	#10
	361-572 FT	#8
1001-2000 VA (1,000 PER PHASE) 4.8-9.6 AMPS	0-151 FT	#12
	152-240 FT	#10
	241-380 FT	#8
	381-604 FT	#6
2001-3,328 VA (1,664 PER PHASE) 9.6-16 AMPS	0-78 FT	#12
	79-125 FT	#10
	126-198 FT	#8
3329-4,992 VA (2,496 PER PHASE) 16-24 AMPS	0-52 FT	#12
	53-83 FT	#10
	84-132 FT	#8

120 VOLT, 1 PHASE LOAD:

LOAD (VA)	DISTANCE	CU CONDUCTOR SIZE
0-1000 VA 0-8 AMPS	0-130 FT	#12
	131-205 FT	#10
	205-330 FT	#8
1001-1500 VA 8-12.5 AMPS	0-87 FT	#12
	88-138 FT	#10
	139-219 FT	#8
	220-350 FT	#6
1501-1920 VA 12.5-16 AMPS	0-68 FT	#12
	69-108 FT	#10
	109-172 FT	#8
	173-273 FT	#6
1921-2880 VA 16-24 AMPS	0-72 FT	#10
	73-114 FT	#8
	115-182 FT	#6

ANY 3 PHASE LOADS GREATER THAN 30 AMPS ARE SHOWN ON THE FEEDER SCHEDULE OR MOTORIZED EQUIPMENT SCHEDULE WITH ASSOCIATED VOLTAGE DROP LIMITED TO 2% OR LESS.

LIGHTING PLAN GENERAL NOTES:

1. REFER TO ARCHITECTURAL PLANS FOR EXACT LOCATION AND ELEVATION OF ALL LIGHTING FIXTURES AND ALL DEVICES. ALL WALL-MOUNTED DEVICE HEIGHTS SHALL BE VERIFIED WITH THE ARCHITECT PRIOR TO ROUGH-IN.
2. VERIFY EXACT CEILING CONSTRUCTION WITH ARCHITECTURAL REFLECTED CEILING PLAN AND PROVIDE LIGHTING FIXTURES WITH ALL NECESSARY MOUNTING HARDWARE.
3. ALL RECESSED FIXTURES SHALL BE PROVIDED WITH ALL REQUIRED STRUCTURAL SUPPORTS AS REQUIRED BY THE CURRENTLY ADOPTED ISSUE OF THE IBC, OR CBC WHERE ADOPTED, IN ADDITION TO ANY LOCAL CODES
4. ALL COVE MOUNTED FIXTURES SHALL EXTEND THE FULL LENGTH OF THE COVE. CONTRACTOR TO FIELD MEASURE COVE LENGTH AND ORDER QUANTITY OF FIXTURES AS REQUIRED.
5. ALL DIMMING BRANCH CIRCUITS SHALL BE PROVIDED WITH A DEDICATED NEUTRAL CONDUCTOR FOR EACH ZONE/CHANNEL.
6. ALL FLUORESCENT DIMMING ZONES/CHANNELS SHALL BE PROVIDED WITH 3 LINE VOLTAGE CONDUCTORS (NEUTRAL, DIMMED HOT, SWITCHED HOT) OR 2 LINE VOLTAGE CONDUCTORS/2 CONTROL CONDUCTORS AS REQUIRED BY THE CONTROL/BALLAST TYPE.
7. ALL EMERGENCY BATTERY PACK FIXTURES SHALL BE PROVIDED WITH A CONSTANT HOT CONNECTION TO THE CHARGING LEAD. SEE GENERAL LIGHTING FIXTURE SCHEDULE NOTES FOR MORE INFORMATION.
8. REFER TO ARCHITECTURAL REFLECTED CEILING PLANS FOR EXIT SIGN CHEVRONS AND NUMBER OF FACES PER EXIT SIGN. ANY DISCREPANCIES BETWEEN EXIT SIGNS SHOWN ON THE ELECTRICAL AND ARCHITECTURAL PLANS SHALL BE BROUGHT TO THE ATTENTION OF THE ARCHITECT PRIOR TO ORDERING EXIT SIGNS.
9. WHEN EXPOSED CEILINGS OR OPEN GRID CONDITIONS OCCUR, THE CONTRACTOR WILL NEED TO PROVIDE THE FOLLOWING ITEMS:
   - ALL BRANCH CIRCUITS SHALL BE IN EMT.
   - ALL BRANCH CIRCUITS SHALL BE ROUTED, NEATLY TRAINED, AND IN PARALLEL TO STRUCTURES OR DUCT WORK. THE TERM "TRAINED" MEANS ALL PARALLEL CONDUITS SHALL MAINTAIN THE SAME SPATIAL RELATIONSHIP WITH EACH OTHER FOR ENTIRE RUN TO INCLUDE RADIUS BENDS AND SWEEPS.
   - VISUALLY OBJECTIONABLE BRANCH CIRCUITS WILL BE REROUTED AT THE REQUEST OF THE ARCHITECT AT NO ADDITIONAL COST.
10. ALL LED REMOTE INDICATORS FOR DUCT DETECTORS AND FIRE/SMOKE DAMPERS REQUIRED BY THE SFM SHALL BE LOCATED IN CEILINGS IN COORDINATION WITH ARCHITECT PRIOR TO ANY ROUGH-IN.
11. RECESSED FIXTURES LOCATED IN A FIRE-RATED CEILING OR WALL SHALL BE PROVIDED WITH A 5-SIDED RATED ENCLOSURE SO CONSTRUCTED AS TO ALLOW CODE AND MANUFACTURER-REQUIRED CLEARANCES BETWEEN THE FIXTURE AND THE ENCLOSURE.
12. PROVIDE REDUNDANT GROUND PATH IN ALL BRANCH CIRCUITS SERVING PATIENT CARE AREAS CONSISTING OF A SEPARATE, INSULATED EQUIPMENT GROUNDING CONDUCTOR PER NEC, OR CEC WHERE ADOPTED, ART 517.13.
13. PROVIDE ADDITIONAL J-BOX NEAR PANEL FOR MULTIPLE HOMERUN CIRCUITRY.
14. UNLESS SPECIFICALLY SHOWN AS (E), (R), (ER), (D), EXISTING OR NON-BOLD, ALL ELECTRICAL DEVICES SHOWN ARE NEW.
15. REFER TO GENERAL POWER PLAN NOTES AND COMMUNICATIONS PATHWAYS GENERAL NOTES FOR ADDITIONAL REQUIREMENTS WHEN POWER AND/OR DATA DEVICES ARE SHOWN ON THIS PLAN.
16. CONTRACTOR SHALL PROVIDE CONDUIT AND WIRE FOR ALL DEVICES TO PANELBOARD(S) INDICATED ON PLANS FOR A COMPLETE AND OPERABLE SYSTEM.
17. CONTRACTOR SHALL PROVIDE MINIMUM #12, 1#12G IN ¾" CONDUIT UNLESS OTHWRWISE NOTED. REFERENCE WIRE SIZE TABLE CHART ABOVE. WHERE REQUIRED, CONDUIT AND WIRE SHALL BE UPSIZED TO MEET THE REQUIREMENT OF THE DEVICE BEING SERVED BY THE BRANCH CIRCUIT. WHERE CONDUIT AND WIRING IS INDICATED AT THE HOME RUN, WIRING AND CONDUIT SHALL CONTINUE AT THAT SIZE FOR THE ENTIRE LENGTH OF THE CIRCUIT.
18. CONTRACTOR SHALL FURNISH ADDITIONAL SWITCHLEGS OR HOT WIRES AS REQUIRED TO MEET THE CONTROL INTENT OF THE DOCUMENTS AND AS REQUIRED BY CODE (I.E. EMERGENCY LIGHTING AND SWITCHED RECEPTACLES).
19. MULTIPLE CIRCUITS MAY BE USED IN A SINGLE RACEWAY. NO MORE THAN (3) DEDICATED CIRCUITS OR (4) CURRENT CARRYING CONDUCTORS SHALL BE INSTALLED IN ANY RACEWAY UNLESS OTHERWISE NOTED. WHERE A COMMON GROUNDED CONDUCTOR IS USED FOR MULTIPLE INDIVIDUAL BRANCH CIRCUITS, PER SECTIONS CEC 200.4, 250.122, 310.15(B)(2), CONDUIT SIZE SHALL BE INCREASED AS REQUIRED FOR THE CONDUCTORS INCLUDING TEMPERATURE DERATING PER CEC TABLE C1.
20. FURNISH AND INSTALL JUNCTION BOXES AS REQUIRED TO MEET MAXIMUM BEND REQUIREMENTS FOR PULLING WIRES PER CEC 358.26. JUNCTION BOXES SHALL BE SIZED AS REQUIRED PER CEC 314.28 UNLESS OTHERWISE NOTED.

WALL TYPES LEGEND

SEE SHEET G121 FOR ASSEMBLY TYPES

EXTERIOR

2 x 6 WOOD STUD WALL - NON RATED	0-W1-6	* ● #
2 x 12 WOOD STUD WALL - NON RATED	0-W1-12	* ● #

INTERIOR

2 x 4 WOOD STUD WALL - NON RATED	0-W2-4	* ● #
2 x 6 WOOD STUD WALL - NON RATED	0-W2-6	* ● #
2 x 8 WOOD STUD WALL - NON RATED	0-W2-8	* ● #
2 x 12 WOOD STUD WALL - NON RATED	0-W2-12	* ● #
2 x 4 WOOD STUD WALL - ACOUSTIC	0-W5-4	* ● #
2 x 6 WOOD STUD WALL - ACOUSTIC	0-W5-6	* ● #
2 X 4 WOOD STUD WALL - 1-HR FIRE PARTITION W/ PROTECTED OPENINGS	1-W3-4	* ● #
2 X 6 WOOD STUD WALL - 1-HR FIRE PARTITION W/ PROTECTED OPENINGS	1-W3-6	* ● #

WALL TYPE NOTES

PARTITION SYMBOL

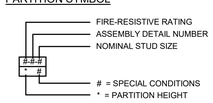

IDENTIFICATION STAMP
DIV. OF THE STATE ARCHITECT
APP: 02-118630 INC:
REVIEWED FOR
SS ☐ FLS ☐ ACS ☑
DATE: 04/13/2021

OFFICE OF THE STATE FIRE MARSHAL
APPROVED FIRE AND PANIC ONLY
Approval of this plan does not authorize or approve any omission or deviation from applicable regulations. Final approval is subject to field inspection. One set of approved plans shall be available on the project site at all times.
PERMIT NO: 28 N 2332 CP
REVIEWED BY: LEO CATALLO, OSFM
DATE: 4/1/2021

GENERAL SERVICES
Department of General Services
State of California
Real Estate Services Division
Project Management & Development Branch
707 Third Street, Suite 4-105
West Sacramento, California 95605

NICHOLS MELBURG & ROSSETTO ARCHITECTS + ENGINEERS
300 Knollcrest Drive
Redding, CA. 96002
(530) 222-3300 (530) 222-3538 FAX
http://www.nmrdesign.com

Copyright © 2019
All ideas, designs, arrangements and plans indicated or represented by this drawing are owned by, and the property of, NICHOLS, MELBURG and ROSSETTO and were created, evolved and developed for use on, and in connection with, the specified project. None of such ideas, designs, arrangements or plans shall be used by, or disclosed to, any person, firm or corporation for any purpose whatsoever without the written permission of NICHOLS, MELBURG and ROSSETTO.

LICENSE STAMPS

REGISTERED PROFESSIONAL ENGINEER RAYMOND W. SWIFT No. E15610 12/31/2021 ELECTRICAL STATE OF CALIFORNIA
Date Signed: 3/25/2021

CONSULTANT

tk1sc COLLABORATIVE
11870 Pierce Street, Suite 160
Riverside, California 92505
951.299.4160 www.tk1sc.com
Project Leader - Jerry Leonhardt
Electrical Lead - Reid Cordry
tk1sc Job #:2019-0228A

DRAWING STATUS
CONSTRUCTION DOCUMENTS

ISSUE

No.	Date	Description
1	10/20/2020	INITIAL PLAN REVIEW
2	01/22/2021	AGENCY RESUBMITTAL
3	03/22/2021	AGENCY RESUBMITTAL

If drawing is not 30" x 42" it is a reduced print

PROJECT
RESIDENTIAL CENTER, UKIAH: REPLACEMENT OF EXISTING RESIDENTIAL CENTER
440 EAST HILL ROAD
WILLITS, CALIFORNIA 95490
MENDOCINO COUNTY
CALIFORNIA CONSERVATION CORP

Supervisor	Designed	Drawn
		Author

DSA Application No.
02-118630

SHEET TITLE
ADMINISTRATION BUILDING LIGHTING PLAN

DGS Project Number	NMR Project Number
XXXXX	18-6456

Reference North | Sheet Scale: As indicated | Sheet Number: E101A

ISSUE DATE
July 9, 2021

Plot Date: 3/22/2021 8:46:26 AM
File Name: BIM 360://CCC Willits Residential Center/E_CCC Willits_ADMIN_2019-0228A.rvt

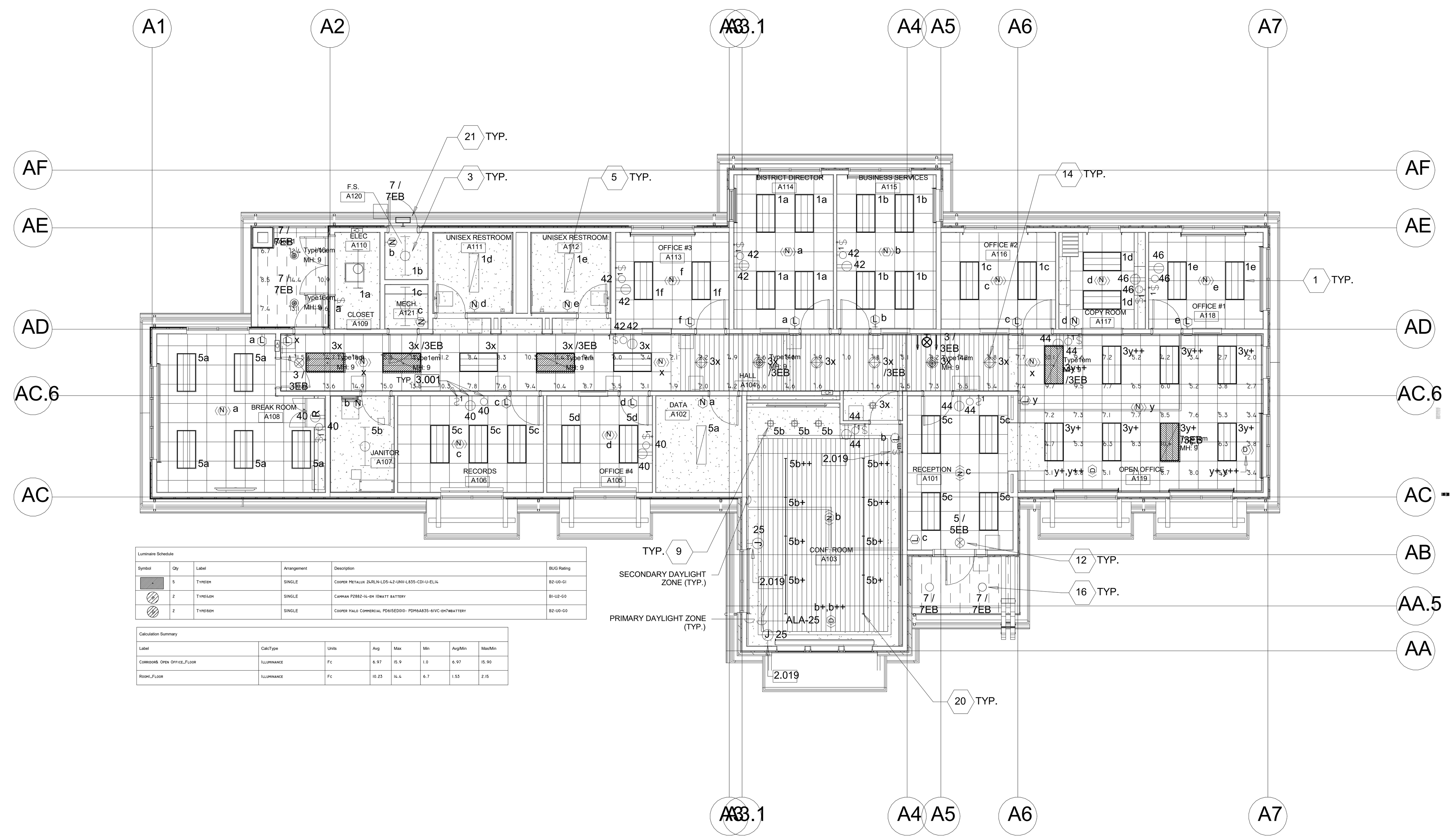

Luminaire Schedule					
Symbol	Qty	Label	Arrangement	Description	BUG Rating
	5	Type1em	SINGLE	Cooper Metalux 24RLN-LD5-42-UNV-L835-CD1-U-EL14	B2-U0-G1
	2	Type14em	SINGLE	Camman P2882-14-em 10watt battery	B1-U2-G0
	2	Type16em	SINGLE	Cooper Halo Commercial PD615ED010- PDM6A835-61VC-em7wbattery	B2-U0-G0

Calculation Summary							
Label	CalcType	Units	Avg	Max	Min	Avg/Min	Max/Min
Corridor& Open Office_Floor	Illuminance	Fc	6.97	15.9	1.0	6.97	15.90
Room1_Floor	Illuminance	Fc	10.23	14.4	6.7	1.53	2.15

ADMINISTRATION BUILDING EMERGENCY LIGHTING PHOTOMETRIC PLAN

SCALE: 1/8" = 1'-0"

IDENTIFICATION STAMP
DIV. OF THE STATE ARCHITECT
APP: 02-118630 INC:
REVIEWED FOR
SS ☐ FLS ☐ ACS ☑
DATE: 04/13/2021

OFFICE OF THE STATE FIRE MARSHAL
APPROVED FIRE AND PANIC ONLY
Approval of this plan does not authorize or approve any omission or deviation from applicable regulations. Final approval is subject to field inspection. One set of approved plans shall be available on the project site at all times.
PERMIT NO.: 20-N-2332-CP
REVIEWED BY: LITO CATAYLO, OSFM
DATE: 4/1/2021

DGS
GENERAL SERVICES
Department of General Services
State of California
Real Estate Services Division
Project Management & Development Branch
707 Third Street, Suite 4-105
West Sacramento, California 95605

NICHOLS MELBURG & ROSSETTO
ARCHITECTS + ENGINEERS
300 Knollcrest Drive
Redding, CA. 96002
(530) 222-3300 (530) 222-3538 FAX
http://www.nmrdesign.com

Copyright © 2019
All ideas, designs, arrangements and plans indicated or represented by this drawing are owned by, and the property of, NICHOLS, MELBURG and ROSSETTO and were created, evolved and developed for use on, and in conjunction with, the specified project. None of such ideas, designs, arrangements or plans shall be used by, or disclosed to any person, firm or corporation for any purpose whatsoever without the written permission of NICHOLS, MELBURG and ROSSETTO.

LICENSE STAMPS

No. E15610
Exp. 12/31/2021
Date Signed 3/25/2021

CONSULTANT
tk1sc
COLLABORATIVE
11870 Pierce Street, Suite 160
Riverside, California 92505
951.299.4160 www.tk1sc.com
Project Leader - Jerry Leonhardt
Electrical Lead - Reid Cordry
tk1sc Job #:2019-0228A

DRAWING STATUS
CONSTRUCTION DOCUMENTS

ISSUE

No.	Date	Description
1	10/20/2020	INITIAL PLAN REVIEW
2	01/22/2021	AGENCY RESUBMITTAL
3	03/22/2021	AGENCY RESUBMITTAL

If drawing is not 30" x 42" it is a reduced print

PROJECT
RESIDENTIAL CENTER, UKIAH: REPLACEMENT OF EXISTING RESIDENTIAL CENTER
440 EAST HILL ROAD
WILLITS, CALIFORNIA 95490
MENDOCINO COUNTY
CALIFORNIA CONSERVATION CORP

Supervisor	Designed	Drawn
		Author

DSA Application No.
02-118630

SHEET TITLE
ADMINISTRATION BUILDING EMERGENCY LIGHTING PHOTOMETRIC PLAN

DGS Project Number	NMR Project Number
XXXXX	18-6456

Reference North

Sheet Scale
1/8" = 1'-0"

Sheet Number
E102A

ISSUE DATE
July 9, 2021

Plot Date: 3/22/2021 8:46:27 AM
File Name: BIM 360://CCC Willits Residential Center/E_CCC Willits_ADMIN_2019-0228A.rvt

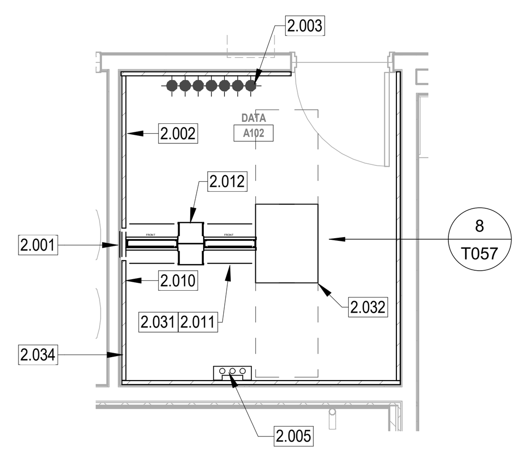

2

BLDG A - ENLARGED IDF PLANS A102

SCALE: 1/4" = 1'-0"

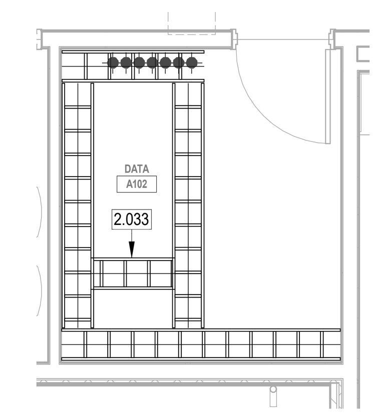

3

BLDG A - Enlarged IDF A102 LADDER RUNWAY

SCALE: 1/4" = 1'-0"

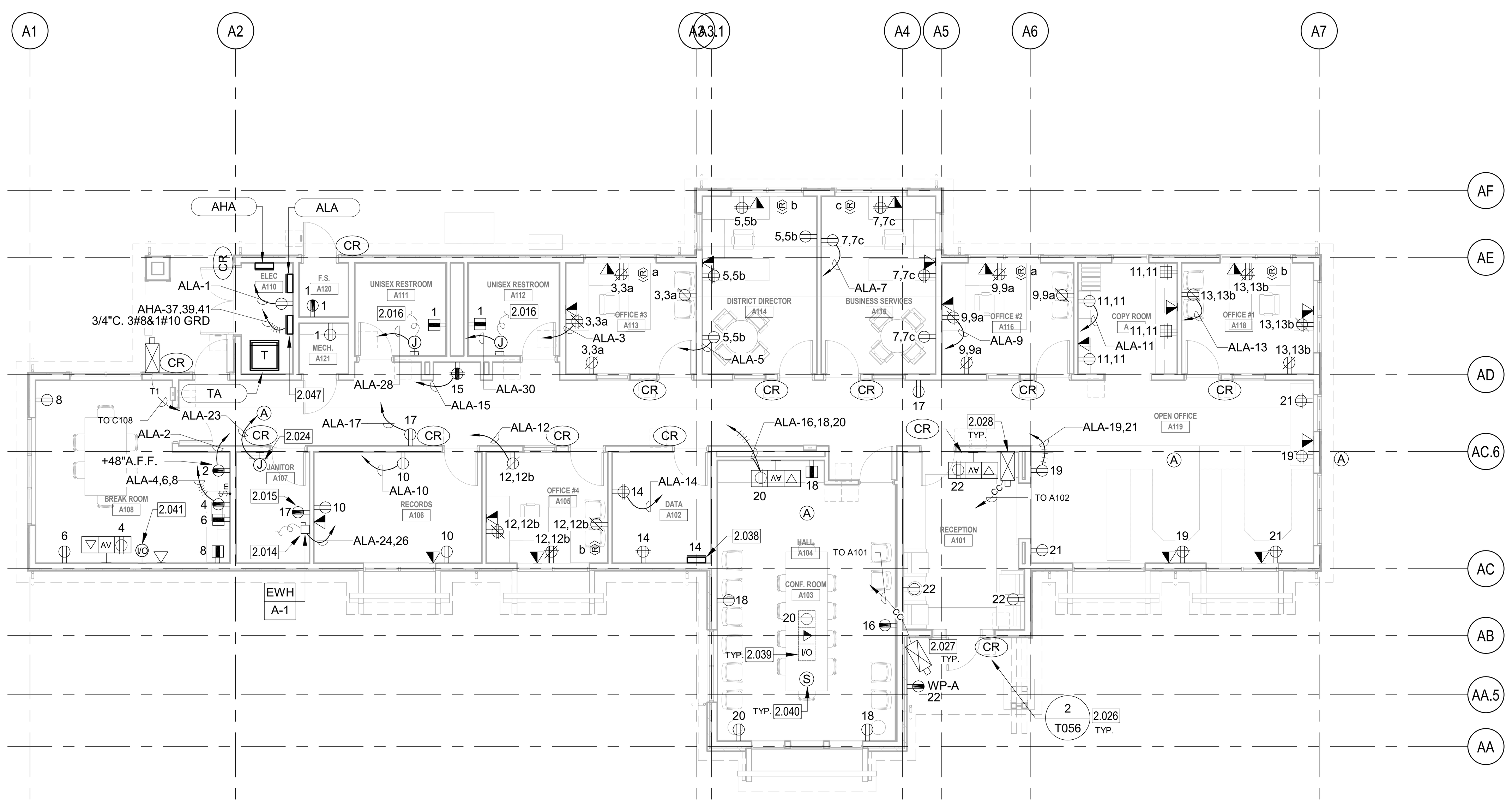

ADMINISTRATION BUILDING POWER AND SIGNAL PLAN

SCALE: 1/8" = 1'-0"

COMMUNICATIONS PATHWAYS GENERAL NOTES

1. CONDUITS SHALL, (a) CONTAIN NO CONTINUOUS SECTIONS LONGER THAN 30M (98 FT.), AND, (b) CONTAIN NO MORE THAN (2) 90° BENDS OR (1) REVERSE BEND WITHOUT INSTALLING A PULLBOX. SPLIT CONDUITS IN PLACE OF PULLBOXES ARE UNACCEPTABLE.
2. CONDUITS SHALL CONTAIN PLASTIC OR NYLON PULL TAPE RATED AT 200 LBS. WITH A MINIMUM OF 5 FEET OF EXTRA PULL TAPE COILED AT EACH END.
3. CONDUIT BEND RADIUS SHALL BE (a) A MINIMUM OF 6 TIMES THE INTERNAL CONDUIT DIAMETER FOR CONDUITS 2" IN DIAMETER OR LESS, AND, (b) 10 TIMES THE INTERNAL CONDUIT DIAMETER FOR CONDUITS MORE THAN 2" IN DIAMETER.
4. TERMINATE CONDUIT STUBS AND SLEEVES THAT PROTRUDE THROUGH STRUCTURAL FLOORS 2"-3" ABOVE THE FLOOR SURFACE.
5. INSTALL BUSHINGS OR BELL ENDS AS REQUIRED ON ALL CONDUITS.
6. FLEX CONDUIT IS UNACCEPTABLE FOR USE AS A COMMUNICATIONS CONDUIT EXCEPT AT SEISMIC JOINTS AND/OR IF APPROVED IN WRITING BY THE ENGINEER.
7. ALL UNDER SLAB OR IN-SLAB CONDUITS SHALL BE INSTALLED IN A MANNER THAT PREVENTS WATER INFILTRATION OF THE CONDUIT. IT IS THE CONTRACTOR'S RESPONSIBILITY TO ENSURE GROUND WATER, RAIN WATER OR CONSTRUCTION WATER IS PREVENTED FROM ENTERING AND/OR REMOVED FROM THE CONDUITS PRIOR TO PLACEMENT OF COMMUNICATIONS CABLES. SEE ELECTRICAL SPECIFICATIONS, DETAILS AND PLANS FOR ADDITIONAL CONDUIT SEALING REQUIREMENTS.
8. ALL PULLBOXES SHALL BE SIZED AND INSTALLED PER ANSI-TIA-569-C. PULLBOXES FOR IN/UNDER SLAB CONDUIT RUNS ARE NOT PERMITTED UNLESS OTHERWISE NOTED. PULLBOXES FOR OVERHEAD CONDUIT RUNS SHALL BE LOCATED ABOVE ACCESSIBLE CEILINGS WITHIN THE ACCESSIBLE CEILING SPACE AND SUPPORTED INDEPENDENTLY FROM THE STRUCTURE AND CONDUIT SUPPORTS. PULLBOXES FOR ROOF MOUNTED OR EXTERIOR ABOVE GRADE APPLICATIONS SHALL BE NEMA 3R RATED. PULLBOXES SHALL BE SIZED ACCORDING TO THE FOLLOWING:

CONDUIT SIZE	WIDTH	LENGTH	DEPTH	WIDTH INCREASE PER ADDITIONAL CONDUIT
1"	4"	16"	3"	2"
2"	8"	36"	4"	5"
3"	12"	48"	5"	6"
4"	15"	60"	8"	8"

FOR OTHER CONDUIT SIZES REFER TO ANSI/TIA-569-C TABLE 12. - LATEST PUBLISHED EDITION.

9. CONDUIT(S) SHALL EXIT A PULLBOX ON THE WALL OPPOSITE THE WALL ENTERED.
10. PROVIDE LABELING OF EACH CONDUIT PER GENERAL ELECTRICAL SPECIFICATIONS.
11. PROVIDE INTERNAL/EXTERNAL GAS AND WATER TIGHT MECHANICAL SEALING/PLUGGING OF EACH BUILDING ENTRY CONDUIT AS SPECIFIED ELSEWHERE IN THE DRAWINGS AND SPECIFICATIONS.

WALL TYPE NOTES

PARTITION SYMBOL

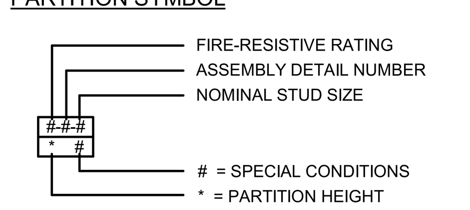

VOLTAGE DROP WORKSHEET: REFERENCE ONLY

1. ALL BRANCH CIRCUITS ARE DESIGNED TO LIMIT VOLTAGE DROP 3% OR LESS USING THE FOLLOWING CRITERIA:

208 VOLT, 1 PHASE LOAD:

LOAD (VA)	DISTANCE	CU CONDUCTOR SIZE
0-1000 VA (500 PER PHASE) 0-4.8 AMPS	0-225 FT	#12
	226-360 FT	#10
	361-572 FT	#8
1001-2000 VA (1,000 PER PHASE) 4.8-9.6 AMPS	0-151 FT	#12
	152-240 FT	#10
	241-380 FT	#8
	381-604 FT	#6
2001-3,328 VA (1,664 PER PHASE) 9.6-16 AMPS	0-78 FT	#12
	79-125 FT	#10
	126-198 FT	#8
3329-4,992 VA (2,496 PER PHASE) 16-24 AMPS	0-52 FT	#12
	53-83 FT	#10
	84-132 FT	#8

120 VOLT, 1 PHASE LOAD:

LOAD (VA)	DISTANCE	CU CONDUCTOR SIZE
0-1000 VA 0-8 AMPS	0-130 FT	#12
	131-205 FT	#10
	205-330 FT	#8
1001-1500 VA 8-12.5 AMPS	0-87 FT	#12
	88-138 FT	#10
	139-219 FT	#8
	220-350 FT	#6
1501-1920 VA 12.5-16 AMPS	0-68 FT	#12
	69-108 FT	#10
	109-172 FT	#8
	173-273 FT	#6
1921-2880 VA 16-24 AMPS	0-72 FT	#10
	73-114 FT	#8
	115-182 FT	#6

ANY 3 PHASE LOADS GREATER THAN 30 AMPS ARE SHOWN ON THE FEEDER SCHEDULE OR MOTORIZED EQUIPMENT SCHEDULE WITH ASSOCIATED VOLTAGE DROP LIMITED TO 2% OR LESS.

WALL TYPES LEGEND

SEE SHEET G121 FOR ASSEMBLY TYPES

EXTERIOR

Wall type	Tag
2 x 6 WOOD STUD WALL - NON RATED	0-W1-6 / * • #
2 x 12 WOOD STUD WALL - NON RATED	0-W1-12 / * • #

INTERIOR

Wall type	Tag
2 x 4 WOOD STUD WALL - NON RATED	0-W2-4 / * • #
2 x 6 WOOD STUD WALL - NON RATED	0-W2-6 / * • #
2 x 8 WOOD STUD WALL - NON RATED	0-W2-8 / * • #
2 x 12 WOOD STUD WALL - NON RATED	0-W2-12 / * • #
2 x 4 WOOD STUD WALL - ACOUSTIC	0-W5-4 / * • #
2 x 6 WOOD STUD WALL - ACOUSTIC	0-W5-6 / * • #
2 X 4 WOOD STUD WALL - 1-HR FIRE PARTITION W/ PROTECTED OPENINGS	1-W3-4 / * • #
2 X 6 WOOD STUD WALL - 1-HR FIRE PARTITION W/ PROTECTED OPENINGS	1-W3-6 / * • #

KEYNOTES

2.001 PLYWOOD BACKBOARD AND TELECOMMUNICATIONS BUSBAR BY E.C. SCS CONTRACTOR SHALL INSTALL #6 WITH GREEN INSULATION TO EACH DATA EQUIPMENT RACK/CABINET, OVERHEAD LADDER TRAY/LADDER RACK, TELECOMMUNICATIONS CONDUITS, TELECOMMUNICATIONS CABLE TRAY(S), ANTI STATIC TILE GROUNDING POINTS ETC. AS REQUIRED. CONNECTIONS SHALL BE MADE WITH 2 HOLE COMPRESSION CONNECTORS. ALL CONNECTIONS SHALL BE BARE METAL TO BARE METAL USING APPROPRIATE ANTIOXIDANT COMPOUND.

2.002 WALL FIELD FOR CAMPUS COPPER BACKBONE CABLE

2.003 4" UNDERGROUND CONDUIT FOR CAMPUS BACKBONE CABLE

2.005 ANSI-J-STD 607A COMPLIANT U.L.-LISTED TELECOMMUNICATIONS MAIN GROUND BUSBAR (TMGB) CHATSWORTH #40153-020 OR EQUAL BY HARGER. MOUNT 12"A.F.F. PROVIDE 1/8" BRASS ENGRAVED NAMEPLATE WITH ABBREVIATION "T.M.G.B." AND ATTACH TO BUS BAR. PROVIDE #6 GROUND CONDUCTOR WITH GREEN INSULATION TO EACH DATA EQUIPMENT RACK/CABINET, OVERHEAD LADDER TRAY/LADDER RACK, ETC. AS REQUIRED. CONNECTIONS SHALL BE MADE WITH 2 HOLE COMPRESSION CONNECTORS. CONNECTIONS SHALL BE BARE METAL TO BARE METAL USING APPROPRIATE ANTIOXIDANT COMPOUND. PROVIDE ALL OTHER GROUNDING REQUIREMENTS AS DETAILED IN THE PATHWAYS & GROUNDING RISER DIAGRAM SHEET T4.07. ELECTRICAL CONTRACTOR SHALL PROVIDE 1/2"C. WITH #6AWG WITH GREEN INSULATION FROM TMGB TO GROUND BUSBAR LOCATED INSIDE MPOE ROOM ELECTRICAL PANEL. ELECTRICAL CONTRACTOR SHALL PROVIDE TELECOMMUNICATIONS BONDING CONDUCTOR (TBC) CONSISTING OF (1) 1"C., W/ #1AWG (U.O.N.) WITH GREEN INSULATION CONNECTING MAIN BUILDING GROUND BUS BAR LOCATED IN MAIN ELECTRICAL ROOM TO THE TELECOMMUNICATIONS MAIN GROUNDING BUSBAR (TMGB) UTILIZING 2-HOLE COMPRESSION CONNECTORS. LABEL EACH END OF TBC WITH A GROUND WARNING TAG (PANDUIT #PT-BGRND OR EQUAL).

2.010 WALL FIELD FOR INCOMING UTILITY CABLE AND TERMINATION EQUIPMENT.

2.011 FLOOR MOUNTED 7' RACK. PROVIDE COMPLETE WITH ALL REQUIRED FLOOR MOUNTING HARDWARE (CHATSWORTH #48353-703).

2.012 SCS CONTRACTOR PROVIDED RACK MOUNTED 7'X6" DOUBLE VERTICAL WIRE MANAGEMENT CHANNEL (6") WITH COVERS (CHATSWORTH PN#30092-703). PROVIDE VELCRO STRAPS AS REQUIRED TO MAINTAIN CABLE BUNDLES, (CHASTWORTH PN#02009-201). PROVIDE RACK RADIUS DROPS WITH VERTICAL WIRE MANAGER (CHATSWORTH PN#12394-701).

2.014 CONNECT COMPLETE TO WATER HEATER AS REQUIRED. PROVIDE CODE SIZED DISCONNECT SWITCH AT THE WATER HEATER AS REQUIRED. COORDINATE LOCATION WITH PLUMBING CONTRACTOR PRIOR TO ROUGH-IN.

2.015 CONNECT CIRCULATION PUMP, TIME CLOCK AND/OR AQUASTAT AS REQUIRED. PROVIDE CODE SIZED DISCONNECT SWITCH AS REQUIRED. SEE PLUMBING PLANS FOR MORE INFORMATION. COORDINATE LOCATION WITH PLUMBING CONTRACTOR PRIOR TO ROUGH-IN.

2.016 PROVIDE CONNECTION TO ELECTRIC HAND DRYERS PER MANUFACTURER'S REQUIREMENTS.

2.024 PROVIDE 120V TO TRAP PRIMER AND CONNECT AS REQUIRED. COORDINATE WITH P.C. FOR EXACT LOCATION PRIOR TO ROUGH-IN. REFER TO PLUMBING DRAWINGS FOR MORE INFORMATION.

2.026 ACCESS CONTROL SYSTEM CARD READER WITH CONDUIT AND CABLING, PER SPECIFICATIONS. SEE SHEET T.056 FOR MORE INFORMATION.

2.027 CCTV LOCATION, EXTERIOR MOUNT IOP CAMERA. PROVIDE AND INSTALL FLUSH MOUNTED SINGLE GANG J-BOX WITH 1" WATERPROOF SLEEVE TO THE ACCESSIBLE CEILING SPACE FOR FUTURE EXTERIOR CCTV CAMERA. PROVIDE (1)CAT-6A CABLE TO EQUIPMENT PATCH PANEL IN NEAREST IDF/MDF ROOM. PROVIDE FIRE STOP PER CODE. MINIMUM 1/2" DEEP FIRE STOP PUTTY ON EACH SIDE FOR SOUND ISOLATION FOR FIRE RATED WALL PENETRATIONS. COORDINATE FINAL LOCATION WITH ARCH RCP. SEE SHEET T055 FOR MORE INFORMATION.

2.028 CCTV LOCATION. INTERIOR MOUNT IP CAMERA. PROVIDE AND INSTALL 5S DEEP BOX MOUNTED IN ACCESSIBLE CEILING ABOVE CAMERA WITH CONDUIT TO NEAREST ACCESSIBLE CEILING SPACE OR MDF/IDF. PROVIDE (1) CAT-6A CABLE TO EQUIPMENT PATCH PANEL IN NEAREST IDF/MDF ROOM. COORDINATE FINAL LOCATION WITH ARCH RCP. SEE SHEET T055 FOR MORE INFORMATION.

2.031 CONTRACTOR SHALL GROUND EACH CABINET AND RACK WITH (1) #6 AWG GREEN INSULATED GROUND CONDUCTOR W/ 2-HOLE COMPRESSION LUG (PANDUIT #RGCBNJ660P OR EQUAL) ROUTED TO COMMON BONDING NETWORK (CBN) - TYPICALLY AN OVERHEAD AISLE GROUND OR UNDER FLOOR GROUNDING REFERENCE GRID. CONNECT 2-HOLE LUG TO CABINET/RACK MOUNTING RAILS. CONNECT GROUND CONDUCTOR TO CBN VIA COMPRESSION TAP AND SEISMICALLY ANCHOR CABINET TO CONCRETE FLOOR (BELOW RAISED FLOOR IN RAISED FLOOR APPLICATIONS).

2.032 SCS CONTRACTOR PROVIDED FLOOR MOUNTED 7'X19" 4-POST RACK. PROVIDE COMPLETE WITH ALL REQUIRED FLOOR MOUNTING HARDWARE (CHATSWORTH #50120-703).

2.033 LADDER TRAY, SIZE PER PLANS (CHATSWORTH # 10250-718). LADDER TRAY TO BE ANCHORED TO WALLS AND MOUNTED TO RACKS WITH CABLE RUNWAY ELEVATION KIT (CHATSWORTH #10506-706). USE CABLE RUNWAY RADIUS DROP (CHATSWORTH #12100-712) AND CABLE RUNWAY RADIUS DROP (CHATSWORTH #12101-702) WITH MOVABLE RUNWAY CROSS MEMBER (CHATSWORTH #12115-712) AS REQUIRED SCS CONTRACTOR TO INSTALL RADIUS WHEREVER CABLE LEAVES TRAY. LADDER TRAY TO BE SUPPORTED EVERY 4 FEET. SUPPORT FROM DECK ABOVE WHERE NECESSARY.

2.034 TELECOMMUNICATIONS BACKBOARD BY E.C., CONSISTING OF FIRE-RATED, A/C GRADE, DOUGLAS FIR PLYWOOD SHEETING FINISHED ONE SIDE. PRIME COAT PAINTED ON ALL SURFACES WITH A FINISH COAT OF FIRE RETARDANT WHITE ENAMEL PAINT. LEAVE ONE (1) FIRE MARSHAL STAMP UNPAINTED FOR INSPECTION ON EACH PLYWOOD SHEET. UNLESS OTHERWISE INDICATED, USE 8'-0" HIGH X 3/4" THICK PLYWOOD AND COVER FULL LENGTH OF ALL FOUR WALLS. PLYWOOD SHALL BE RAISED 12" AFF.

2.038 PROVIDE POWER PROVISIONS FOR MECHANICAL BUILDING AUTOMATION CONTROLLER. EXACT LOCATION TO BE DETERMINED BY MECHANICAL/BAS CONTRACTOR PRIOR TO INSTALLATION. VERIFY EXACT LOCATION PRIOR TO ROUGH-IN. REFER TO MECHANICAL PLANS FOR ADDITIONAL INFORMATION.

2.039 HDMI INPUT IN FLOORBOX. SEE SINGLE LINE DIAGRAM SHEET E605 AND SPECIFICATIONS FOR MORE INFORMATION.

2.040 CEILING MOUNT AV SPEAKER. SEE SINGLE LINE DIAGRAM SHEET E605 AND SPECIFICATIONS FOR MORE INFORMATION.

2.041 WALL MOUNT HDMI INPUT. SEE SINGLE LINE DIAGRAM SHEET E605 AND SPECIFICATIONS FOR MORE INFORMATION.

2.047 LIFT STATION CONTROL PANEL. CONNECT AS NEEDED.

POWER PLAN GENERAL NOTES:

1. ALL RECEPTACLES ON COMMON WALLS SHALL BE SEPARATE BOXES AND OFFSET 24-INCHES MINIMUM.
2. ALL PENETRATIONS THROUGH FIRE RATED WALLS SHALL BE PROTECTED FROM THE SPREAD OF FIRE WITH AN APPROVED FIRESTOP SYSTEM EQUAL OR GREATER THAN THE FIRE RATING OF THE WALL.
3. ALL WALL-MOUNTED DEVICE HEIGHTS SHALL BE VERIFIED WITH THE ARCHITECT PRIOR TO ROUGH-IN.
4. ALL FURNITURE FEED LOCATIONS TO BE VERIFIED WITH ARCHITECT AND FURNITURE VENDOR PRIOR TO ROUGH-IN.
5. ALL FURNITURE WHIPS SHALL BE TRIMMED TO REDUCE EXCESS WHIP LENGTH.
6. WHEN EXPOSED CEILINGS OR OPEN GRID CONDITIONS OCCUR, THE CONTRACTOR WILL NEED TO PROVIDE THE FOLLOWING ITEMS:

   - ALL BRANCH CIRCUITS SHALL BE IN EMT.

   - ALL BRANCH CIRCUITS SHALL BE ROUTED NEATLY AND IN PARALLEL TO STRUCTURES OR DUCT WORK.

   - VISUALLY OBJECTIONABLE BRANCH CIRCUITS SHALL BE REROUTED AT THE REQUEST OF THE ARCHITECT AT NO ADDITIONAL COST.
7. EXPOSED CABLE/CONDUCTORS INSTALLED IN A PLENUM SPACE SHALL CONFORM TO NEC, OR CEC WHERE ADOPTED, ARTICLE 300.22(C).
8. PROVIDE G.F.C.I. TYPE RECEPTACLE(S) OR RECEPTACLE(S) PROTECTED BY A GFCI CIRCUIT BREAKER(S) WHEN LOCATED WITHIN 6 FEET OF ANY SINK OR THERAPEUTIC TUB, LAUNDRY AREA, SERVING ANY DRINKING FOUNTAIN OR VENDING MACHINE, WITHIN ANY KITCHEN SPACE AND/OR LOCATED OUTDOORS. WHERE RECEPTACLES ARE NOT READILY ACCESSIBLE, PROVIDE GFCI CIRCUIT BREAKER(S) TO PROTECT THE RESPECTIVE BRANCH CIRCUIT AND PROVIDE ADDITIONAL NEUTRAL CONDUCTORS IN THE BRANCH CIRCUITING AS REQUIRED TO ENSURE PROPER GFCI FUNCTION
9. PROVIDE OCCUPANCY SENSOR/LIGHTING CONTROL SYSTEM CONTROLLED RECEPTACLE RELAY(S) AS REQUIRED TO SWITCH CONTROLLED RECEPTACLES. CONNECT BRANCH CIRCUITRY AND CONTROL WIRING AS REQUIRED TO ALLOW OCCUPANCY SENSOR/LIGHTING CONTROL SYSTEM RELAY TO SWITCH STANDALONE AND/OR SYSTEMS FURNITURE CONTROLLED RECEPTACLES AS INDICATED ON PLANS. PROVIDE ADDITIONAL CONDUIT, WIRING AND PATHWAYS NECESSARY TO CONNECT BRANCH CIRCUITRY AND CONTROL WIRING TO REMOTE RELAYS TO INCLUDE RELAY(S) LOCATED ON ALTERNATE FLOORS, IN ELECTRICAL ROOMS, ETC.
10. UNLESS SPECIFICALLY SHOWN AS (E), (R), (ER), (D), EXISTING OR NON-BOLD, ALL ELECTRICAL DEVICES SHOWN ARE NEW.
11. PROVIDE REDUNDANT GROUND PATH IN ALL BRANCH CIRCUITS SERVING PATIENT CARE AREAS CONSISTING OF A SEPARATE, INSULATED EQUIPMENT GROUNDING CONDUCTOR PER NEC, OR CEC WHERE ADOPTED, ART 517.13.
12. CONTRACTOR SHALL PROVIDE CONDUIT AND WIRE FOR ALL DEVICES TO PANELBOARD(S) INDICATED ON PLANS FOR A COMPLETE AND OPERABLE SYSTEM.
13. CONTRACTOR SHALL PROVIDE MINIMUM 2#12, 1#12G IN ½" CONDUIT UNLESS OTHERWISE NOTED. REFERENCE WIRE SIZE TABLE CHART ABOVE. WHERE REQUIRED, CONDUIT AND WIRE SHALL BE UPSIZED TO MEET THE REQUIREMENT OF THE DEVICE BEING SERVED BY THE BRANCH CIRCUIT. WHERE CONDUIT AND WIRING IS INDICATED AT THE HOME RUN, WIRING AND CONDUIT SHALL CONTINUE AT THAT SIZE FOR THE ENTIRE LENGTH OF THE CIRCUIT.
14. CONTRACTOR SHALL FURNISH ADDITIONAL SWITCHLEGS OR HOT WIRES AS REQUIRED TO MEET THE CONTROL INTENT OF THE DOCUMENTS AND AS REQUIRED BY CODE (I.E. EMERGENCY LIGHTING AND SWITCHED RECEPTACLES).
15. MULTIPLE CIRCUITS MAY BE USED IN A SINGLE RACEWAY. NO MORE THAN (3) DEDICATED CIRCUITS OR (4) CURRENT CARRYING CONDUCTORS SHALL BE INSTALLED IN ANY RACEWAY UNLESS OTHERWISE NOTED. WHERE A COMMON GROUNDED CONDUCTOR IS USED FOR MULTIPLE INDIVIDUAL BRANCH CIRCUITS, PER SECTIONS CEC 200.4, 250.122, 310.15(B)(2), CONDUIT SIZE SHALL BE INCREASED AS REQUIRED FOR THE CONDUCTORS INCLUDING TEMPERATURE DERATING PER CEC TABLE C1.
16. FURNISH AND INSTALL JUNCTION BOXES AS REQUIRED TO MEET MAXIMUM BEND REQUIREMENTS FOR PULLING WIRES PER CEC 358.26. JUNCTION BOXES SHALL BE SIZED AS REQUIRED PER CEC 314.28 UNLESS OTHERWISE NOTED.

IDENTIFICATION STAMP
DIV. OF THE STATE ARCHITECT
APP: 02-118630 INC:
REVIEWED FOR
SS ☐ FLS ☐ ACS ☑
DATE: 04/13/2021

OFFICE OF THE STATE FIRE MARSHAL
APPROVED FIRE AND PANIC ONLY
Approval of this plan does not authorize or approve any omission or deviation from applicable regulations. Final approval is subject to field inspection. One set of approved plans shall be available on the project site at all times.
PERMIT NO.: 20-N-2332-CP
REVIEWED BY: LITO CATAYLO, OSFM
DATE: 4/ 1 /2021

GENERAL SERVICES
Department of General Services
State of California
Real Estate Services Division
Project Management & Development Branch
707 Third Street, Suite 4-105
West Sacramento, California 95605

NICHOLS MELBURG & ROSSETTO
ARCHITECTS + ENGINEERS
300 Knollcrest Drive
Redding, CA. 96002
(530) 222-3300 (530) 222-3538 FAX
http://www.nmrdesign.com

Copyright © 2019
All ideas, designs, arrangements and plans indicated or represented by this drawing are owned by, and the property of, NICHOLS, MELBURG and ROSSETTO and were created, evolved and developed for use on, and in conjunction with, the specified project. None of such ideas, designs, arrangements or plans shall be used by, or disclosed to any person, firm or corporation for any purpose whatsoever without the written permission of NICHOLS, MELBURG and ROSSETTO.

LICENSE STAMPS

REGISTERED PROFESSIONAL ENGINEER
RAYMOND W. SWARTZ
No. E15610
Exp. 12/31/2021
ELECTRICAL
STATE OF CALIFORNIA
Date Signed:
3/25/2021

CONSULTANT
tk1sc
COLLABORATIVE
11870 Pierce Street, Suite 160
Riverside, California 92505
951.299.4160 www.tk1sc.com
Project Leader - Jerry Leonhardt
Electrical Lead - Reid Cordry
tk1sc Job #:2019-0228A

DRAWING STATUS
CONSTRUCTION DOCUMENTS

ISSUE

No.	Date	Description
1	10/20/2020	INITIAL PLAN REVIEW
2	01/22/2021	AGENCY RESUBMITTAL
3	03/22/2021	AGENCY RESUBMITTAL

If drawing is not 30" x 42" it is a reduced print

PROJECT
RESIDENTIAL CENTER, UKIAH: REPLACEMENT OF EXISTING RESIDENTIAL CENTER
440 EAST HILL ROAD
WILLITS, CALIFORNIA 95490
MENDOCINO COUNTY
CALIFORNIA CONSERVATION CORP

Supervisor	Designed	Drawn
		Author

DSA Application No.
02-118630

SHEET TITLE
ADMINISTRATION BUILDING POWER AND SIGNAL PLAN

DGS Project Number	NMR Project Number
XXXXX	18-6456

Reference North
Sheet Scale: As indicated
Sheet Number: E201A

ISSUE DATE
July 9, 2021

KEYNOTES

2.022 PROVIDE 3/4"C.O.(S) TO RESPECTIVE CONTROL DEVICE(S) FOR CONTROL WIRING. REFER TO THE EQUIPMENT CONTROL WIRING DIAGRAMS FOR ADDITIONAL INFORMATION.

2.023 REFER TO MOTORIZED EQUIPMENT SCHEDULE FOR MOTOR FEEDER/ BRANCH CIRCUIT INFORMATION.

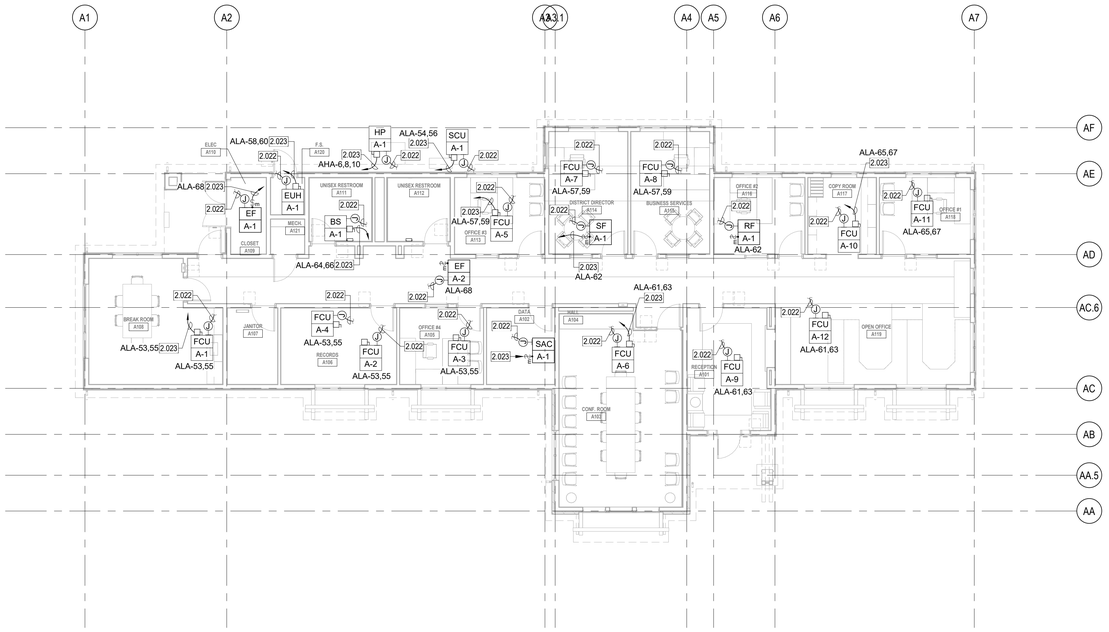

ADMINISTRATION BUILDING MECHANICAL POWER PLAN

SCALE: 1/8" = 1'-0"

MOTORIZED EQUIPMENT SCHEDULE

TAG	ITEM	DESCRIPTION	EQUIPMENT RATING VOLTS	PH.	MOTOR HP	MOTOR FLA	VFD FLA	MCA	MOCP	DISC. SW. SIZE STARTER SIZE	CIRCUIT DATA CONDUIT - WIRE	SPECIFIC NOTES
BS	A-1	BRANCH SELECTOR	208	2		1.0		1.2	15 A	30AS	3/4"C. - 2#12, 1#12 GRD.	A
EF	A-1	EXHAUST FAN	115	1	.167	4.4		5.5	15 A	Motor Rated	3/4"C. - 2#12, 1#12 GRD.	A,C
EF	A-2	EXHAUST FAN	115	1	.25	5.8		7.3	15 A	Motor Rated	3/4"C. - 2#12, 1#12 GRD.	A,C
EUH	A-1	ELECTRICAL HEATER	208	1		12.7		15.9	20 A	30AS	3/4"C. - 2#12, 1#12 GRD.	A
FCU	A-1	FAN COIL UNIT	208	1		1.2		1.5	15 A	30AS	3/4"C. - 2#12, 1#12 GRD.	A
FCU	A-2	FAN COIL UNIT	208	1		0.5		0.6	15 A	30AS	3/4"C. - 2#12, 1#12 GRD.	A
FCU	A-3	FAN COIL UNIT	208	1		0.2		0.3	15 A	30AS	3/4"C. - 2#12, 1#12 GRD.	A
FCU	A-4	FAN COIL UNIT	208	1		1.3		1.6	15 A	30AS	3/4"C. - 2#12, 1#12 GRD.	A
FCU	A-5	FAN COIL UNIT	208	1		0.2		0.3	15 A	30AS	3/4"C. - 2#12, 1#12 GRD.	A
FCU	A-6	FAN COIL UNIT	208	1		0.2		0.3	15 A	30AS	3/4"C. - 2#12, 1#12 GRD.	A
FCU	A-7	FAN COIL UNIT	208	1		0.2		0.3	15 A	30AS	3/4"C. - 2#12, 1#12 GRD.	A
FCU	A-8	FAN COIL UNIT	208	1		0.2		0.3	15 A	30AS	3/4"C. - 2#12, 1#12 GRD.	A
FCU	A-9	FAN COIL UNIT	208	1		0.2		0.3	15 A	30AS	3/4"C. - 2#12, 1#12 GRD.	A
FCU	A-10	FAN COIL UNIT	208	1		0.5		0.6	15 A	30AS	3/4"C. - 2#12, 1#12 GRD.	A
FCU	A-11	FAN COIL UNIT	208	1		0.2		0.3	15 A	30AS	3/4"C. - 2#12, 1#12 GRD.	A
FCU	A-12	FAN COIL UNIT	208	1		1.1		1.4	15 A	30AS	3/4"C. - 2#12, 1#12 GRD.	A
HP	A-1	HEAT PUMP	460	3		22.3		27.9	40 A	60AS	1"C. - 3#8, 1#8 GRD.	A
RF	A-1	EXHAUST FAN	115	1	.5	9.8		12.3	20 A	30AS	3/4"C. - 2#12, 1#12 GRD.	A,C
SAC	A-1	SPLIT SYSTEM INDOOR UNIT	208	1		14.6		18.3	20 A	30AS	3/4"C. - 2#12, 1#12 GRD.	A,J
SCU	A-1	SPLIT SYSTEM OUTDOOR UNIT	208	1		14.6		18.3	20 A	30AS	3/4"C. - 2#12, 1#12 GRD.	A
SF	A-1	EXHAUST FAN	115	1	.5	9.8		12.3	20 A	30AS	3/4"C. - 2#12, 1#12 GRD.	A,C

MOTORIZED EQUIPMENT SCHEDULE GENERAL NOTES:

1. ALL BRANCH CIRCUIT DATA IS BASED UPON METALLIC CONDUITS. IF THE CONTRACTOR ELECTS TO USE NONMETALLIC CONDUITS, AN EQUIPMENT GROUNDING CONDUCTOR SHALL BE INSTALLED PER NEC, OR CEC WHERE ADOPTED, TABLE 250.122 AND THE CONDUIT SIZE SHALL BE INCREASED ACCORDINGLY.
2. ELECTRICAL CONTRACTOR SHALL REFER TO ALL DOCUMENTS RELATED TO THE EQUIPMENT (I.E. SHOP DRAWINGS, CONSTRUCTION DOCUMENTS, ETC.) IN REGARDS TO ELECTRICAL CHARACTERISTICS OF ALL EQUIPMENT LISTED IN THE SCHEDULE. ANY MODIFICATION AND/OR ADDITIONAL WORK NECESSARY SHALL BE INCLUDED IN THE BASE BID.
3. ELECTRICAL CONTRACTOR SHALL CHECK THE ROTATION OF ALL THREE PHASE MOTORS AND CORRECT THE ROTATION IF REVERSED.
4. ELECTRICAL CONTRACTOR SHALL PROVIDE FUSES SIZED PER THE EQUIPMENT NAMEPLATE INFORMATION.
5. DISCONNECT SWITCHES SHALL BE HEAVY DUTY TYPE, EXTERNALLY OPERATED, QUICK MAKE QUICK BREAK AND SHALL BE FUSIBLE OR NON FUSIBLE AS INDICATED. A MAXIMUM VOLTAGE, CURRENT AND HORSEPOWER SHALL BE CLEARLY MARKED ON SWITCH ENCLOSURE. SWITCHES HAVING DUAL RATINGS (HIGHER RATINGS WHEN USED WITH DUAL ELEMENT FUSES) SHALL HAVE RATINGS INDICATED ON METAL PLATES RIVETED OR OTHERWISE PERMANENTLY ATTACHED TO THE ENCLOSURE. WHEN INDICATED, TOGGLE SWITCHES SHALL BE MOTOR RATED FOR THE APPLICATION.
6. STARTERS SHALL BE FULL VOLTAGE, REDUCED VOLTAGE OR COMBINATION DISCONNECT AND STARTER, WITH CONTROL VOLTAGE AS REQUIRED, AS INDICATED ON THE DOCUMENTS RELATED TO THE EQUIPMENT, SUCH AS SHOP DRAWINGS, CONSTRUCTION DOCUMENTS, ETC. STARTERS SHALL INCLUDE MOTOR OVERLOAD PROTECTION, PHASE LOSS AND PHASE UNBALANCE PROTECTION AS REQUIRED.
7. ALL TERMINATIONS AND ENCLOSURES SHALL BE RATED FOR USE WITH 75 DEGREE C CONDUCTORS.
8. COMPLETE INSTALLATION SHALL CONFORM TO THE REQUIREMENTS OF NEC (OR CEC WHERE ADOPTED) ARTICLES 430 AND 440.
9. CONTRACTOR TO COORDINATE WITH ALL OTHER PROJECT TRADES AND WITH OWNER/ TENANT FOR TO OBTAIN RESPECTIVE EQUIPMENT SCCR AND PROVIDE APPROPRIATE PROTECTIVE DEVICES TO LIMIT AVAILABLE FAULT CURRENT TO LESS THAN THE EQUIPMENT NAMEPLATE SCCR PER NEC (OR CEC WHERE ADOPTED) 110.10. SEE POWER SYSTEM STUDY SPECIFICATIONS FOR ADDITIONAL REQUIREMENTS.
10. UNLESS OTHERWISE NOTED, MOCP VALUES FOR VFD-EQUIPPED DEVICE ARE SIZED PER NEC (OR CEC WHERE ADOPTED) 430.130(A) 1. CONTRACTOR SHALL COORDINATE WITH ALL OTHER PROJECT TRADES AND WITH OWNER/ TENANT (IF PROVIDING EQUIPMENT ON PROJECT) TO OBTAIN NAMEPLATE VFD-EQUIPPED DEVICE MOCP VALUE FROM MANUFACTURER INSTALLATION INSTRUCTIONS AND PROVIDE APPROPRIATE PROTECTIVE DEVICES TO COMPLY WITH NEC (OR CEC WHERE ADOPTED) 430.130(A).2.

MOTORIZED EQUIPMENT SCHEDULE SPECIFIC NOTES:

A. FUSED AS RECOMMENDED BY MANUFACTURER.

B. MAGNETIC MOTOR STARTER WITH CONTROL TRANSFORMER, AUXILIARY CONTACTS, INDICATOR LIGHT AND H.O.A. SWITCH. VERIFY CONTROL TRANSFORMER VOLTAGE WITH M.C. PRIOR TO ORDERING MATERIAL.

C. ROUTE THROUGH LINE VOLTAGE CONTROL. SEE MECHANICAL AND/OR PLUMBING PLANS FOR ADDITIONAL REQUIREMENTS.

D. VERIFY LOCATION WITH PLUMBING PLANS PRIOR TO ROUGH-IN. CONNECT TO AQUASTAT AND TIME CLOCK AS REQUIRED.

E. REMOTE VFD. PROVIDE EARLY BREAK CONTACTS ON ANY DISCONNECT SWITCHES REQUIRED BY CODE OR SHOWN ON PLANS THAT ARE DOWNSTREAM OF THE REMOTE VFD. PROVIDE CONDUIT AND CONDUCTORS AS REQUIRED TO INTERCONNECT THE CONTACT WITH VFD "ENABLE" TERMINALS. REFER TO MECHANICAL AND/OR PLUMBING PLANS FOR LOCATION. PROVIDE FEEDER(S) TO CONNECT REMOTE VFD AND MOTOR(S) AS REQUIRED.

F. INTEGRAL VFD PROVIDED WITH EQUIPMENT. REFER TO MECHANICAL AND/OR PLUMBING PLANS FOR LOCATION. CONNECT TO VFD AS REQUIRED.

G. INTEGRAL DISCONNECT PROVIDED WITH EQUIPMENT. REFER TO MECHANICAL AND/OR PLUMBING PLANS FOR LOCATION. CONNECT TO INTEGRAL DISCONNECT AS REQUIRED.

H. INTEGRAL DISCONNECT PROVIDED WITH VFD. REFER TO MECHANICAL AND/OR PLUMBING PLANS FOR LOCATION. CONNECT TO INTEGRAL DISCONNECT AS REQUIRED.

J. INDOOR UNIT POWERED FROM RESPECTIVE OUTDOOR UNIT. PROVIDE POWER AND CONTROL WIRING AS REQUIRED.

K. ROUTE THROUGH LINE VOLTAGE CONTROL FOR KITCHEN HOOD FIRE SUPPRESSION SYSTEM. SEE MECHANICAL, FIRE ALARM AND FOOD SERVICE PLANS FOR ADDITIONAL REQUIREMENTS.

WALL TYPES LEGEND

SEE SHEET G121 FOR ASSEMBLY TYPES

EXTERIOR

2 x 6 WOOD STUD WALL - NON RATED	0-W1-6 * ◆ #
2 x 12 WOOD STUD WALL - NON RATED	0-W1-12 * ◆ #

INTERIOR

2 x 4 WOOD STUD WALL - NON RATED	0-W2-4 * ◆ #
2 x 6 WOOD STUD WALL - NON RATED	0-W2-6 * ◆ #
2 x 8 WOOD STUD WALL - NON RATED	0-W2-8 * ◆ #
2 x 12 WOOD STUD WALL - NON RATED	0-W2-12 * ◆ #
2 x 4 WOOD STUD WALL - ACOUSTIC	0-W5-4 * ◆ #
2 x 6 WOOD STUD WALL - ACOUSTIC	0-W5-6 * ◆ #
2 X 4 WOOD STUD WALL - 1-HR FIRE PARTITION W/ PROTECTED OPENINGS	1-W3-4 * ◆ #
2 X 6 WOOD STUD WALL - 1-HR FIRE PARTITION W/ PROTECTED OPENINGS	1-W3-6 * ◆ #

WALL TYPE NOTES

PARTITION SYMBOL

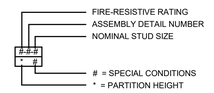

IDENTIFICATION STAMP
DIV. OF THE STATE ARCHITECT
APP: 02-118630 INC:
REVIEWED FOR
SS ☐ FLS ☐ ACS ☑
DATE: 04/13/2021

OFFICE OF THE STATE FIRE MARSHAL
APPROVED FIRE AND PANIC ONLY
Approval of this plan does not authorize or approve any omission or deviation from applicable regulations. Final approval is subject to field inspection. One set of approved plans shall be available on the project site at all times.
PERMIT NO: 28 N 2332-CP
REVIEWED BY: LEO CATALLO, OSFM
DATE: 4/ /2021

GENERAL SERVICES
Department of General Services
State of California
Real Estate Services Division
Project Management & Development Branch
707 Third Street, Suite 4-105
West Sacramento, California 95605

NICHOLS MELBURG & ROSSETTO
ARCHITECTS + ENGINEERS
300 Knollcrest Drive
Redding, CA. 96002
(530) 222-3300 (530) 222-3538 FAX
http://www.nmrdesign.com

Copyright © 2019
All ideas, designs, arrangements and plans indicated or represented by this drawing are owned by, and the property of, NICHOLS, MELBURG and ROSSETTO and were created, evolved and developed for use on, and in connection with, the specified project. None of such ideas, designs, arrangements or plans shall be used by, or disclosed to, any person, firm or corporation for any purpose whatsoever without the written permission of NICHOLS, MELBURG and ROSSETTO.

LICENSE STAMPS

REGISTERED PROFESSIONAL ENGINEER RAYMOND W. SWEETEN No. E15610 12/31/2021 MECHANICAL STATE OF CALIFORNIA
Date Signed: 3/25/2021

CONSULTANT
tk1sc COLLABORATIVE
11870 Pierce Street, Suite 160
Riverside, California 92505
951.299.4160 www.tk1sc.com
Project Leader - Jerry Leonhardt
Electrical Lead - Reid Cordry
tk1sc Job #:2019-0228A

DRAWING STATUS
CONSTRUCTION DOCUMENTS

ISSUE

No.	Date	Description
1	10/20/2020	INITIAL PLAN REVIEW
2	01/22/2021	AGENCY RESUBMITTAL
3	03/22/2021	AGENCY RESUBMITTAL

If drawing is not 30" x 42" it is a reduced print

PROJECT
RESIDENTIAL CENTER, UKIAH: REPLACEMENT OF EXISTING RESIDENTIAL CENTER
440 EAST HILL ROAD
WILLITS, CALIFORNIA 95490
MENDOCINO COUNTY
CALIFORNIA CONSERVATION CORP

Supervisor	Designed	Drawn
		Author

DSA Application No.
02-118630

SHEET TITLE
ADMINISTRATION BUILDING MECHANICAL POWER PLAN

DGS Project Number	NMR Project Number
XXXXX	18-6456

Reference North | Sheet Scale: As indicated | Sheet Number: E301A

ISSUE DATE
July 9, 2021

Plot Date: 3/22/2021 3:45:18 PM
File Name: BIM 360://CCC Willits Residential Center/E_CCC Willits_ADMIN_2019-0228A.rvt

PANEL: ALA

MOUNTING: SURFACE | **DOUBLE-LUGS:** No | **VOLTS:** 120/208 Wye | **SUPPLY FROM:** TA
NEMA 3R: No | **200% NEUTRAL:** No | **PHASE:** 3 | **LOCATION:** ELEC A110
FEED THRU: No | **I/G BUS:** No | **WIRE:** 4 | **MCB:** 350-3P
M.L.O.: No | **AIC:** 10,000 | **BUS:** 400A

NOTE	DESCRIPTION	BKR	POLE	TYPE	CIRC	A	B	C	CIRC	TYPE	POLE	BKR	DESCRIPTION	NOTE
	RECEPTACLES A112, A111, A121, A110, A120	20 A	1	R	1	900	900		2	K	1	20 A	K BREAK ROOM A108	
	RECEPTACLES OFFICE #3 A113	20 A	1	R	3			1080 360	4	R	1	20 A	R BREAK ROOM A108	
	RECEPTACLES DISTRICT DIRECTOR A114	20 A	1	R	5			1080 360	6	R	1	20 A	R BREAK ROOM A108	
	RECEPTACLES BUSINESS SERVICES A115	20 A	1	R	7	1080	360		8	R	1	20 A	R BREAK ROOM A108	
	RECEPTACLES OFFICE #2 A116	20 A	1	R	9			1080 540	10	R	1	20 A	R RECORDS A106	
	RECEPTACLES COPY ROOM A117	20 A	1	R	11			1080 1080	12	R	1	20 A	R OFFICE #4 A105	
	RECEPTACLES OFFICE #1 A118	20 A	1	R	13	1080	760		14	R,P	1	20 A	R DATA A102	
	DRINKING FOUNTAIN	20 A	1	R	15			500 180	16	R	1	20 A	R CONF. ROOM A103	
	RECEPTACLES CORRIDOR	20 A	1	R	17			540 540	18	R	1	20 A	R CONF. ROOM A103	
	R OPEN OFFICE A119	20 A	1	R	19	900	540		20	R	1	20 A	R CONF. ROOM A103	
	R OPEN OFFICE A119	20 A	1	R	21		900	720	22	R	1	20 A	R RECEPTION A101	
	P JANITOR A107	20 A	1	P	23			100 7000	24	P	2	35 A	WATER HEATER	
	P CONF. ROOM A103 MOTORIZED SHADES	20 A	1	P	25	360	7000		26	--	--	--	--	--
	P DATA A102 FACP	20 A	1	P	27		500	2400	28	P	1	25 A	HAND DRYER RESTROOM A111	
	SPARE	20 A	1	--	29			0 2400	30	P	1	25 A	HAND DRYER RESTROOM A112	
	P EV CHARGING STATION	20 A	2	P	31	3330	3330		32	P	2	20 A	P EV CHARGING STATION	
--	--	--	--	--	33		3330	3330	34	--	--	--	--	--
	P EV CHARGING STATION	20 A	2	P	35			3330 3330	36	P	2	20 A	P EV CHARGING STATION	
--	--	--	--	--	37	3330	3330		38	--	--	--	--	--
	P EV CHARGING STATION	20 A	2	P	39		3330	579	40	L,R	1	20 A	FCU LIGHTS	
--	--	--	--	--	41			3330 772	42	L,R	1	20 A	FCU LIGHTS	
	P EV CHARGING STATION	20 A	2	P	43	3330	579		44	L,R	1	20 A	FCU LIGHTS	
--	--	--	--	--	45		3330	386	46	L,R	1	20 A	FCU LIGHTS	
	L_R GENERATOR YARD	20 A	1	L	47			230 0	48	--	1	20 A	SPARE	
--	SPACE	--	--	--	49	0	0		50	--	--	--	SPACE	--
--	SPACE	--	--	--	51		0	0	52	--	--	--	SPACE	--
	FCU A-1, A-2, A-3, A-4	20 A	2	M	53			330 1525	54	M	2	20 A	SCU A-1	
--	--	--	--	--	55	330	1525		56	--	--	--	--	--
	FCU A-5, A-7, A-8	15 A	2	M	57			60 1320	58	M	2	20 A	EUH A-1	
--	--	--	--	--	59			60 1320	60	--	--	--	--	--
	FCU A-6, A-9, A-12	20 A	2	M	61	155	2260		62	M	1	20 A	SF A-1, RF A-1	
--	--	--	--	--	63			155 105	64	M	2	15 A	BS A-1	
	FCU A-10, A-11	15 A	2	M	65			70 105	66	--	--	--	--	--
--	--	--	--	--	67	70	1180		68	M	1	20 A	EF A-1, A-2	
	SPARE	20 A	1	--	69		0	0	70	--	1	20 A	SPARE	
	SPARE	20 A	1	--	71			0 0	72	--	1	20 A	SPARE	
					PHASE TOTALS:	36629.00 VA	24185.00 VA	28582.00 VA						
COMMENTS:						310.9 A	201.5 A	243.8 A						

LOAD TYPE KEY	LOAD CLASSIFICATION	CONNECTED LOAD	AVG. DEMAND...	ESTIMATED DEMAND	PANEL TOTALS	AMPS	KVA
H = HVAC EQUIP	Motor	0.90 kVA	125.00%	1.13 kVA			
K = KITCHEN	P	59.76 kVA	100.00%	59.76 kVA	TOTAL CONNECTED LOAD:	248.1 A	89.40 KVA
L = LIGHTING	R	17.78 kVA	78.12%	13.89 kVA	TOTAL DEMAND LOAD:	240.3 A	86.59 KVA
M = MOTOR	L	0.39 kVA	125.00%	0.48 kVA	HIGH PHASE:	311 A	36.63 KVA
P = POWER	M	10.57 kVA	107.21%	11.33 kVA			
R = RECEPTACLE							
W = WATER HEATER							

PANEL: AHA

MOUNTING: Surface | **DOUBLE-LUGS:** No | **VOLTS:** 480/277 Wye | **SUPPLY FROM:** MSA
NEMA 3R: No | **200% NEUTRAL:** No | **PHASE:** 3 | **LOCATION:** ELEC A110
FEED THRU: No | **I/G BUS:** No | **WIRE:** 4 | **MCB:** 225-3P
M.L.O.: No | **AIC:** 22,000 | **BUS:** 225

NOTE	DESCRIPTION	BKR	POLE	TYPE	CIRC	A (VA)	B (VA)	C (VA)	CIRC	TYPE	POLE	BKR	DESCRIPTION	NOTE
	L Room A113, A116, A118, A117, A121, A120, A110,...	20 A	1	L	1	777 950			2	L	1	20 A	Site Lighting	H
	L Room A119	20 A	1	L	3		596 1160		4	L	1	20 A	Site Lighting	H
	L Room A108, A106, A105, A101, A102, A107, A103	20 A	1	L	5			859 5927	6	M	3	40 A	HP A-1	
H	L Exterior	20 A	1	L	7	80 5927			8	--	--	--	--	--
H	L Monument Sign Lighting	20 A	1	L	9		60 5927		10	--	--	--	--	--
H	L Flag Pole Lighting	20 A	1	L	11			90	12					
					13				14					
					15				16					
					17				18					
					19				20					
					21				22					
					23				24					
					25				26					
					27				28					
					29				30					
					31				32					
					33				34					
					35				36					
M	SEWAGE LIFT STATION	40 A	3	P	37	7430 36629			38	L'...	3	175 A	TRANSFORMER TA	
--	--	--	--	--	39		7430 24185		40	--	--	--	--	--
--	--	--	--	--	41			7430 28582	42	--	--	--	--	--
					PHASE TOTALS:	51792.47 VA	39358.07 VA	42887.87 VA						
COMMENTS:						188.9 A	142.1 A	156.8 A						

LOAD TYPE KEY	LOAD CLASSIFICATION	CONNECTED LOAD	AVG. DEMAND...	ESTIMATED DEMAND	PANEL TOTALS	AMPS	KVA
H = HVAC EQUIP	Motor	0.90 kVA	125.00%	1.13 kVA			
K = KITCHEN	P	82.05 kVA	100.00%	82.05 kVA	TOTAL CONNECTED LOAD:	161.2 A	134.04 kVA
L = LIGHTING	R	17.78 kVA	78.12%	13.89 kVA	TOTAL DEMAND LOAD:	163.7 A	136.06 kVA
M = MOTOR	L	4.96 kVA	125.00%	6.20 kVA	HIGH PHASE:	189 A	51.79 KVA
P = POWER	M	28.35 kVA	115.68%	32.80 kVA			
R = RECEPTACLE							
W = WATER HEATER							

PANEL SCHEDULE GENERAL NOTES:

1. WHERE PANEL IS INDICATED TO INCLUDE FEED THRU LUGS, PROVIDE FEED THROUGH LUGS AT THE OPPOSITE END OF THE PANELBOARD FROM THE PANELBOARD MAIN LUGS.
2. WHERE PANEL IS INDICATED TO INCLUDE DOUBLE LUGS, PROVIDE A DOUBLE LUG KIT AT THE SAME END OF THE PANELBOARD AS THE PANELBOARD MAIN LUGS.
3. WHERE PANEL IS INDICATED TO INCLUDE 200% NEUTRAL, PROVIDE PANELBOARDS UL LISTED AS HAVING NEUTRAL BUSSES RATED TO CARRY 200 PERCENT OF THE CURRENT CARRYING CAPACITY OF THE PHASE BUSSING. OTHERWISE, NEUTRAL BUSSING TO BE FULL SIZE AND RECTANGULAR.
4. WHERE PANEL IS INDICATED TO INCLUDE AN I/G BUS, PROVIDE PANELBOARDS WITH AN ISOLATED GROUND BUS, DRILLED AND TAPPED FOR NUMBER OF ISOLATED GROUND CONDUCTORS SHOWN, AS WELL AS FOR ALL SPARES AND SPACES SHOWN ON THE PANELBOARD.
5. WHERE PANEL CIRCUIT BREAKER RATING IS SHOWN AS SERIES RATED, PROVIDE CIRCUIT BREAKERS IN PANELBOARD WHICH ARE SERIES RATED WITH THE UPSTREAM SYSTEM FOR THE AVAILABLE FAULT CURRENT. THE PANELBOARD SHALL BE MARKED WITH THE SERIES CONNECTED RATINGS, AS WELL AS ALL MARKING AS REQUIRED BY THE NEC, OR CEC WHERE ADOPTED, 240-83(C).
6. WHERE PANEL IS INDICATED AS RECESSED OR FLUSH MOUNTED, PROVIDE SPARE CONDUITS STUBBED UP INTO THE ACCESSIBLE CEILING SPACE. PROVIDE ONE (1) 3/4" CONDUIT ONLY FOR EACH THREE (3) SPARES OR SPACES, MINIMUM OF TWO (2). EACH CONDUIT SHALL BE TAGGED, CAPPED AND MARKED FOR FUTURE USE.
7. ALL BUSSING SHALL BE TIN PLATED ALUMINUM.
8. ALL CIRCUIT BREAKERS USED AS SWITCHES SHALL BE UL LISTED AND LABELED "SWD" FOR SWITCHING DUTY.
9. PROVIDE BREAKER INTERLOCK WITH ADJACENT BREAKER(S) FOR ANY MULTI-WIRE BRANCH CIRCUIT. BREAKER INTERLOCK GROUPING SHALL BE BY BRANCH CIRCUIT GROUP (i.e. MULTIPLE CIRCUITS SHARING A COMMON NEUTRAL (NEC, OR CEC WHERE ADOPTED, 210.4 (B).) COMMON YOKE (NEC, OR CEC WHERE ADOPTED, 210.7(B) ,) OR FURNITURE SYSTEM NEC OR CEC WHERE ADOPTED, 605.6 AND 605.7). WHERE AN EXISTING PANEL IS BEING ALTERED OR MODIFIED IN ANY WAY, CONTRACTOR SHALL INCLUDE ALL COSTS IN BASE BID TO ADD BREAKER INTERLOCKS TO EXISTING MULTI-WIRE BRANCH CIRCUITS BASED ON CONTRACTOR'S INVESTIGATION OF EXISTING CONDITIONS.
10. PROVIDE BREAKER LOCK OFF DEVICE ON ANY CIRCUIT BREAKER FEEDING A TRANSFORMER AS REQUIRED, PER NEC, OR CEC WHERE ADOPTED, 450.14. WHERE AN EXISTING PANEL IS BEING ALTERED OR MODIFIED IN ANY WAY, CONTRACTOR SHALL INCLUDE ALL COSTS IN BASE BID TO ADD BREAKER LOCK-OFF DEVICES TO EXISTING TRANSFORMER CIRCUIT BREAKERS BASED ON CONTRACTOR'S INVESTIGATION OF EXISTING CONDITIONS.
11. ALL CIRCUIT BREAKERS SHALL BE BOLT-ON TYPE AND SHALL BE SUITABLE FOR 75 DEGREE AMPACITY CONDUCTORS.
12. PANELS SHALL BE OF THE DEAD FRONT SAFETY TYPE. PANELS SHALL BE MINIMUM 20" WIDE AND 5-3/4" DEEP UNLESS OTHERWISE NOTED ON PLAN.
13. COORDINATE WITH APPLICABLE TRADE TO INSURE RECESSED MOUNTED PANELBOARDS WILL SEAT FLUSH IN THE WALLS PROVIDED. PANEL TRIMS SHALL HAVE CONCEALED DOORS AND FASTENERS WITH FLUSH TYPE COMBINATION LOCK AND CATCH, TWO MILLED TYPE KEYS SUPPLIED WITH EACH PANEL. ALL LOCKS SHALL BE KEYED ALIKE AND EACH DOOR SHALL HAVE A PLASTIC COVERED DIRECTORY FRAME WITH A TYPED IDENTIFICATION CARD OF ALL CIRCUIT AND PANEL NUMBERS FOR BRANCH CIRCUIT PANELBOARDS.
14. UPON PROJECT COMPLETION, CONTRACTOR SHALL INSTALL TYPED AS-BUILT PANEL DIRECTORIES IN EACH PANEL WITHIN THE MFGR-PROVIDED DIRECTORY HOLDER. THE DIRECTORY SHALL CLEARLY IDENTIFY EACH CIRCUIT TO ITS CLEAR, EVIDENT, AND SPECIFIC PURPOSE OR USE. EACH CIRCUIT IDENTITY SHALL INCLUDE SUFFICIENT DETAIL TO ALLOW EACH CIRCUIT TO BE DISTINGUISHED FROM ALL OTHERS PER NEC, OR CEC WHERE ADOPTED, ART 408.1 AND 408.4 . HANDWRITTEN DIRECTORIES ARE UNACCEPTABLE COPIES OF AS-BUILT PANEL SCHEDULES SHALL BE PLACED IN PANEL DIRECTORIES. E.C. TO INCLUDE ALL COSTS REQUIRED FOR LARGER-THAN-STANDARD CUSTOM PANEL DIRECTORY HOLDERS TO ACCOMMODATE COPIES OF AS-BUILT PANEL SCHEDULES.
15. PANELBOARDS SHALL BE MANUFACTURED BY G.E., CUTLER-HAMMER, SIEMENS, OR SQUARE "D". FUSED PANEL BOARDS SHALL BE BY COOPER BUSSMANN.
16. PROVIDE SHOP DRAWING SUBMITTAL PER THE ELECTRICAL SPECIFICATION SUBMITTAL REQUIREMENTS FOR EACH PANEL DEPICTING CONFORMANCE WITH THE ABOVE NOTES AND SCHEDULES.

SPECIFIC PANEL SCHEDULE NOTES:

"A" PROVIDE LOCK-ON DEVICE.

"B" PROVIDE LOCK-OFF DEVICE.

"C" PROVIDE SHUNT TRIP DEVICE.

"D" PROVIDE GFCI TYPE DEVICE.

"E" PROVIDE A RED CIRCUIT BREAKER.

"F" PROVIDE A NEW BREAKER TO MATCH THE EXISTING IN PANEL.

"G" EXISTING BREAKER WITH NEW LOAD.

"H" PROVIDE RELAY AS REQUIRED FOR CONTROL OF EXTERIOR LIGHTING BY PHOTOCELL ON / TIMECLOCK OFF. MOUNT RELAY IN SEPARATE BARRIERED COMPARTMENT OF PANELBOARD.

PANEL SCHEDULE INDEX		
XXXX	ALA	AHA
XXXX	XXXX	XXXX
XXXX	XXXX	XXXX

IDENTIFICATION STAMP
DIV. OF THE STATE ARCHITECT
APP: 02-118630 INC:
REVIEWED FOR
SS ☐ FLS ☐ ACS ☑
DATE: 04/13/2021

OFFICE OF THE STATE FIRE MARSHAL
APPROVED FIRE AND PANIC ONLY
Approval of this plan does not authorize or approve any omission or deviation from applicable regulations. Final approval is subject to field inspection. One set of approved plans shall be available on the project site at all times.
PERMIT NO: 20 N 2332 CP
REVIEWED BY: LEO CATALLO, OSFM
DATE: 4/ /2021

GENERAL SERVICES
Department of General Services
State of California
Real Estate Services Division
Project Management & Development Branch
707 Third Street, Suite 4-105
West Sacramento, California 95605

NICHOLS MELBURG & ROSSETTO
ARCHITECTS + ENGINEERS
300 Knollcrest Drive
Redding, CA. 96002
(530) 222-3300 (530) 222-3538 FAX
http://www.nmrdesign.com

Copyright © 2019
All ideas, designs, arrangements and plans indicated or represented by this drawing are owned by, and the property of, NICHOLS, MELBURG and ROSSETTO and were created, evolved and developed for use on, and in connection with, the specified project. None of such ideas, designs, arrangements or plans shall be used by, or disclosed to any person, firm or corporation for any purpose whatsoever without the written permission of NICHOLS, MELBURG and ROSSETTO.

LICENSE STAMPS

REGISTERED PROFESSIONAL ENGINEER RAYMOND W. SWEETEN No. E15610 12/31/2021 ELECTRICAL STATE OF CALIFORNIA
Date Signed: 3/25/2021

CONSULTANT

tklsc COLLABORATIVE
11870 Pierce Street, Suite 160
Riverside, California 92505
951.299.4160 www.tk1sc.com
Project Leader - Jerry Leonhardt
Electrical Lead - Reid Cordry
tk1sc Job #:2019-0228A

DRAWING STATUS
CONSTRUCTION DOCUMENTS

ISSUE

No.	Date	Description
1	10/20/2020	INITIAL PLAN REVIEW
2	01/22/2021	AGENCY RESUBMITTAL
3	03/22/2021	AGENCY RESUBMITTAL

If drawing is not 30" x 42" it is a reduced print

PROJECT
RESIDENTIAL CENTER, UKIAH: REPLACEMENT OF EXISTING RESIDENTIAL CENTER
440 EAST HILL ROAD
WILLITS, CALIFORNIA 95490
MENDOCINO COUNTY
CALIFORNIA CONSERVATION CORP

Supervisor	Designed	Drawn
		Author

DSA Application No.
02-118630

SHEET TITLE
ADMINISTRATION BUILDING PANEL SCHEDULES

DGS Project Number	NMR Project Number
XXXXX	18-6456

Reference North: NORTH
Sheet Scale: 12" = 1'-0"
Sheet Number: E407A

ISSUE DATE
July 9, 2021

Plot Date: 3/22/2021 6:57:12 PM
File Name: BIM 360:/CCC Willits Residential Center/E_CCC Willits_ADMIN_2019-0228A.rvt

STATE OF CALIFORNIA
Indoor Lighting
NRCC-LTI-E
CALIFORNIA ENERGY COMMISSION

CERTIFICATE OF COMPLIANCE		NRCC-LTI-E
Project Name:	Replacement of Existing Residential Center	**Report Page:** (Page 6 of 7)
Project Address:	440 East Hill Road	**Date Prepared:** 10/20/2020

T. DECLARATION OF REQUIRED CERTIFICATES OF INSTALLATION

Selections have been made based on information provided in this document. If any selection have been changed by permit applicant, an explanation should be included in Table E. Additional Remarks. These documents must be provided to the building inspector during construction and can be found online at https://www.energy.ca.gov/title24/2019standards/2019_compliance_documents/Nonresidential_Documents/NRCI/

Yes	No	Form/Title	Field Inspector Pass	Field Inspector Fail
●	○	NRCI-LTI-01-E - Must be submitted for all buildings	☐	☐
○	●	NRCI-LTI-02-E- Must be submitted for a lighting control system, or for an Energy Management Control System (EMCS), to be recognized for compliance.	☐	☐
○	●	NRCI-LTI-04-E - Must be submitted for two interlocked systems serving an auditorium, a convention center, a conference room, a multipurpose room or a theater to be recognized for compliance.	☐	☐
○	●	NRCI-LTI-05-E- Must be submitted for a Power Adjustment Factor (PAF) to be recognized for compliance.	☐	☐
○	●	NRCI-LTI-06-E- Must be submitted for additional wattage installed in a video conferencing studio to be recognized for compliance.	☐	☐

U. DECLARATION OF REQUIRED CERTIFICATES OF ACCEPTANCE

Selections have been made based on information provided in this document. If any selection have been changed by the permit applicant, an explanation should be included in Table E. Additional Remarks. These documents must be provided to the building inspector during construction and any with "-A" in the form name must be completed through an Acceptance Test Technician Certification Provider (ATTCP). For more information visit: http://www.energy.ca.gov/title24/attcp/providers.html

Yes	No	Form/Title	Field Inspector Pass	Field Inspector Fail
●	○	NRCA-LTI-02-A - Must be submitted for occupancy sensors and automatic time switch controls.	☐	☐
○	●	NRCA-LTI-03-A - Must be submitted for automatic daylight controls.	☐	☐
●	○	NRCA-LTI-04-A - Must be submitted for demand responsive lighting controls.	☐	☐
○	●	NRCA-LTI-05-A. - Must be submitted for institutional tuning power adjustment factor (PAF)	☐	☐

Registration Number: | Registration Date/Time: | Registration Provider: EnergySoft
CA Building Energy Efficiency Standards - 2019 Nonresidential Compliance | Report Version: 2019.0.001 Schema Version: rev 20190401 | Report Generated: 2020-10-20 08:52:43

STATE OF CALIFORNIA
Indoor Lighting
NRCC-LTI-E
CALIFORNIA ENERGY COMMISSION

CERTIFICATE OF COMPLIANCE		NRCC-LTI-E
Project Name:	Replacement of Existing Residential Center	**Report Page:** (Page 7 of 7)
Project Address:	440 East Hill Road	**Date Prepared:** 10/20/2020

DOCUMENTATION AUTHOR'S DECLARATION STATEMENT

Documentation Author Name: Ray Swartz	Documentation Author Signature:
Company: tk1sc	Signature Date: 2020-10-20
Address: 11870 Pierce Street, Suite 160	CEA/ HERS Certification Identification (if applicable):
City/State/Zip: Riverside CA 92505	Phone: 951-299-4160

RESPONSIBLE PERSON'S DECLARATION STATEMENT

I certify the following under penalty of perjury, under the laws of the State of California:

1. The information provided on this Certificate of Compliance is true and correct.
2. I am eligible under Division 3 of the Business and Professions Code to accept responsibility for the building design or system design identified on this Certificate of Compliance (responsible designer)
3. The energy features and performance specifications, materials, components, and manufactured devices for the building design or system design identified on this Certificate of Compliance conform to the requirements of Title 24, Part 1 and Part 6 of the California Code of Regulations.
4. The building design features or system design features identified on this Certificate of Compliance are consistent with the information provided on other applicable compliance documents, worksheets, calculations, plans and specifications submitted to the enforcement agency for approval with this building permit application.
5. I will ensure that a completed signed copy of this Certificate of Compliance shall be made available with the building permit(s) issued for the building, and made available to the enforcement agency for all applicable inspections. I understand that a completed signed copy of this Certificate of Compliance is required to be included with the documentation the builder provides to the building owner at occupancy.

Responsible Designer Name: Ray Swartz	Responsible Designer Signature:
Company: tk1sc	Date Signed: 2020-10-20
Address: 11870 Pierce Street, Suite 160	License: E15610
City/State/Zip: Riverside CA 92505	Phone: 951-299-4160

Registration Number: | Registration Date/Time: | Registration Provider: EnergySoft
CA Building Energy Efficiency Standards - 2019 Nonresidential Compliance | Report Version: 2019.0.001 Schema Version: rev 20190401 | Report Generated: 2020-10-20 08:52:43

STATE OF CALIFORNIA
Indoor Lighting
NRCC-LTI-E
CALIFORNIA ENERGY COMMISSION

CERTIFICATE OF COMPLIANCE		NRCC-LTI-E
Project Name:	Replacement of Existing Residential Center	**Report Page:** (Page 3 of 7)
Project Address:	440 East Hill Road	**Date Prepared:** 10/20/2020

F. INDOOR LIGHTING FIXTURE SCHEDULE

20	20 - Linear LED	No	No	26	JA8 Lamp	8	No	208	☐	☐
3	3 - LED Striplight 4'	No	No	16	JA8 Lamp	3	No	48	☐	☐
5	5 - 1x4 Recessed LED	No	No	29.8	JA8 Lamp	4	No	119.2	☐	☐
9	9 - Recessed LED Downlight	No	No	11	JA8 Lamp	3	No	33	☐	☐
							Total Designed Watts: CONDITIONED SPACES		1,899.8	

[1]*FOOTNOTE: Design Watts for small aperture and color changing luminaires which qualify per §140.6(a)4iB is adjusted to be 75% of their rated wattage. Table F automatically makes this adjustment, the permit applicant should enter full rated wattage in column 05.*

G. MODULAR LIGHTING SYSTEMS

This section does not apply to this project.

H. INDOOR LIGHTING CONTROLS (Not including PAFs)

*This table includes lighting controls for conditioned and unconditioned spaces. When an control having a * is shown, the notes section of this table provides more detail on how compliance is achieved. The lighting controls section of the Compliance Summary Table on the first page will show "DOES NOT COMPLY" if the notes are left blank.*

Building Level Controls

01	02	03 Field Inspector Pass	03 Field Inspector Fail
Mandatory Demand Response §110.12(c)	Shut-off controls §130.1(c)		
Required 10,000 SF	Whole Building Auto Time Switch	☐	☐

Area Level Controls

04 Area Description	05 Complete Building or Area Category Primary Function Area	06 Area Controls §130.1(a)	07 Multi-Level Controls §130.1(b)	08 Shut-Off Controls §130.1(c)	09 Primary/Sky lit Daylighting §130.1(d)	10 Secondary Daylighting §140.6(d)	11 Interlocked Systems §140.6(a)1	12 Field Inspector Pass	12 Field Inspector Fail

*NOTES: Controls with a * require a note in the space below explaining how compliance is achieved.
EX: Conference 1: Primary/Skylight Daylighting: Exempt because less than 120 watts of general lighting; EXCEPTION 1 to §130.1(d)2*

13
Plan Sheet Showing Daylit Zones:

Registration Number: | Registration Date/Time: | Registration Provider: EnergySoft
CA Building Energy Efficiency Standards - 2019 Nonresidential Compliance | Report Version: 2019.0.001 Schema Version: rev 20190401 | Report Generated: 2020-10-20 08:52:43

STATE OF CALIFORNIA
Indoor Lighting
NRCC-LTI-E
CALIFORNIA ENERGY COMMISSION

CERTIFICATE OF COMPLIANCE		NRCC-LTI-E
Project Name:	Replacement of Existing Residential Center	**Report Page:** (Page 4 of 7)
Project Address:	440 East Hill Road	**Date Prepared:** 10/20/2020

I. LIGHTING POWER ALLOWANCE: COMPLETE BUILDING OR AREA CATEGORY METHODS

Each area complying using the Complete Building or Area Category Methods per §140.6(b) are included in this table. Column 06 Indicates if additional lighting power allowances per §140.6(c) or adjustments per §140.6(a) are being used .

Conditioned Spaces

01 Area Description	02 Complete Building or Area Category Primary Function Area	03 Allowed Density (W/ft²)	04 Area (ft²)	05 Allowed Wattage (Watts)	06 Additional Allowance / Adjustment Area Category	06 Additional Allowance / Adjustment PAF
Restroom	Restrooms	0.65	134	87.1	No	No
Elec/Mech/Riser	Electrical Mechanical Telephone Room	0.4	177	70.8	No	No
Office <= 250	Office 250 square feet or less	0.7	941	658.7	No	No
Open Office	Office Open Plan	0.6	422	253.2	No	No
Corridor	Corridor Area	0.6	497	298.2	No	No
Storage/Other	All Other Space Types	0.4	66	26.4	No	No
Boardroom/Conference	Convention, Conference, Multipurpose and Meeting Center Areas	0.85	390	331.5	No	No
Lobby	Main Entry Lobby	0.85	169	143.65	No	No
Work/Copy Rooms	Copy Room	0.5	89	44.5	No	No
Break Rooms	Lounge Breakroom or Waiting Area	0.65	249	161.85	No	No
		TOTALS:	3,134	2,075.9	See Tables J, or P for detail	

J. ADDITIONAL ALLOWANCE: AREA CATEGORY METHOD QUALIFYING LIGHTING SYSTEM

This section does not apply to this project.

K. TAILORED METHOD GENERAL LIGHTING POWER ALLOWANCE

This section does not apply to this project.

L. ADDITIONAL LIGHTING ALLOWANCE: TAILORED WALL DISPLAY

This section does not apply to this project.

Registration Number: | Registration Date/Time: | Registration Provider: EnergySoft
CA Building Energy Efficiency Standards - 2019 Nonresidential Compliance | Report Version: 2019.0.001 Schema Version: rev 20190401 | Report Generated: 2020-10-20 08:52:43

STATE OF CALIFORNIA
Indoor Lighting
NRCC-LTI-E
CALIFORNIA ENERGY COMMISSION

CERTIFICATE OF COMPLIANCE		NRCC-LTI-E
Project Name:	Replacement of Existing Residential Center	**Report Page:** (Page 5 of 7)
Project Address:	440 East Hill Road	**Date Prepared:** 10/20/2020

M. ADDITIONAL LIGHTING ALLOWANCE: TAILORED FLOOR AND TASK LIGHTING

This section does not apply to this project.

N. ADDITIONAL LIGHTING ALLOWANCE: TAILORED ORNAMENTAL/SPECIAL EFFECTS

This section does not apply to this project.

O. ADDITIONAL LIGHTING ALLOWANCE: TAILORED VERY VALUABLE MERCHANDISE

This section does not apply to this project.

P.POWER ADJUSTMENT: LIGHTING CONTROL CREDIT (POWER ADJUSTMENT FACTOR (PAF))

This section does not apply to this project.

Q. RATED POWER REDUCTION COMPLIANCE FOR ALTERATIONS

This section does not apply to this project.

R. 80% LIGHTING POWER FOR ALLALTERATIONS - CONTROLS EXCEPTIONS

This section does not apply to this project.

S. DAYLIGHT DESIGN POWER ADJUSTMENT FACTOR (PAF)

This section does not apply to this project.

Registration Number: | Registration Date/Time: | Registration Provider: EnergySoft
CA Building Energy Efficiency Standards - 2019 Nonresidential Compliance | Report Version: 2019.0.001 Schema Version: rev 20190401 | Report Generated: 2020-10-20 08:52:43

STATE OF CALIFORNIA
Indoor Lighting
NRCC-LTI-E
CALIFORNIA ENERGY COMMISSION

CERTIFICATE OF COMPLIANCE		NRCC-LTI-E
Project Name:	Replacement of Existing Residential Center	**Report Page:** (Page 1 of 7)
Project Address:	440 East Hill Road	**Date Prepared:** 10/20/2020

This document is used to demonstrate compliance with requirements in §110.9, §110.12(c), §130.0, §130.1, §140.6 and §141.0(b)2 for indoor lighting scopes using the prescriptive path.

A. GENERAL INFORMATION

01	Project Location (city)	Willits	04	Total Conditioned Floor Area (ft²)	3,134
02	Climate Zone	2	05	Total Unconditioned Floor Area (ft²)	0
03	Occupancy Types Within Project (select all that apply):		06	# of Stories (Habitable Above Grade)	1

☒ Office ☐ Retail ☐ Warehouse ☐ Hotel/Motel ☐ School ☒ Support Areas
☐ Parking Garage ☐ High-Rise Residential ☐ Relocatable ☐ Healthcare ☒ Other (Write in) See Table I

B. PROJECT SCOPE

This table includes any lighting systems that are within the scope of the permit application and are demonstrating compliance using the prescriptive path outlined in §140.6 or §141.0(b)2 for alterations.

Scope of Work	Conditioned Spaces		Unconditioned Spaces	
01	02	03	04	05
My Project Consists of (check all that apply):	Calculation Method	Area (ft²)	Calculation Method	Area (ft²)
☒ New Lighting System	Area Category Method	3134	Area Category Method	0
☐ New Lighting Systems - Parking Garage				
☐ Altered Lighting System				
Total Area of Work (ft²)	3134		0	

Registration Number: | Registration Date/Time: | Registration Provider: EnergySoft
CA Building Energy Efficiency Standards - 2019 Nonresidential Compliance | Report Version: 2019.0.001 Schema Version: rev 20190401 | Report Generated: 2020-10-20 08:52:43

STATE OF CALIFORNIA
Indoor Lighting
NRCC-LTI-E
CALIFORNIA ENERGY COMMISSION

CERTIFICATE OF COMPLIANCE		NRCC-LTI-E
Project Name:	Replacement of Existing Residential Center	**Report Page:** (Page 2 of 7)
Project Address:	440 East Hill Road	**Date Prepared:** 10/20/2020

C. COMPLIANCE RESULTS

If any cell on this table says "DOES NOT COMPLY" or "COMPLIES with Exceptional Conditions" refer to Table D. for guidance.

Lighting in conditioned and unconditioned spaces must not be combined for compliance per §140.6(b)1	Allowed Lighting Power per §140.6(b) (Watts) 01 Complete Building §140.6(c)1 (See Table I)	02 Area Category §140.6(c)2 (See Table I)	03 Area Category Additional §140.6(c)2iG (+) (See Table J)	04 Tailored §140.6(c)3 (+) (See Table K)	=	05 Total Allowed (Watts)	≥	Adjusted Lighting Power per §140.6(a) (Watts) 06 Total Designed (Watts) (See Table F)	07 Adjustments PAF Lighting Control Credits §140.6(a)2 (-) (See Table P)	=	08 Total Adjusted (Watts) *includes Adjustments	Compliance Results 09
Conditioned	0	2,075.9	0	0	=	2075.9	≥	1,899.8	0	=	1899.8	**05 must be >= 08 §140.6**
Unconditioned	0	0	0	0	=		≥	0	0	=		COMPLIES
								Controls Compliance (See Table H for Details)				COMPLIES
								Rated Power Reduction Compliance (See Table Q for Details)				

D. EXCEPTIONAL CONDITIONS

This table is auto-filled with uneditable comments because of selections made or data entered in tables throughout the form.

E. ADDITIONAL REMARKS

This table includes remarks made by the permit applicant to the Authority Having Jurisdiction.

F. INDOOR LIGHTING FIXTURE SCHEDULE

This table includes all permanent designed lighting and all portable lighting in offices.

Designed Wattage: Conditioned Spaces

01 Name or Item Tag	02 Complete Luminaire Description	03 Modular (Track) Fixture	04 Small Aperture & Color Change[1]	05 Watts per luminaire[1]	How is Wattage determined	07 Total Number of Luminaires	08 Exempt per §140.6(a)3	09 Design Watts	10 Field Inspector Pass	10 Field Inspector Fail
1	1 -2x4 LED	No	No	31.2	JA8 Lamp	43	No	1,341.6	☐	☐
14	14 - Pendant LED Downlight	No	No	25	JA8 Lamp	6	No	150	☐	☐

Registration Number: | Registration Date/Time: | Registration Provider: EnergySoft
CA Building Energy Efficiency Standards - 2019 Nonresidential Compliance | Report Version: 2019.0.001 Schema Version: rev 20190401 | Report Generated: 2020-10-20 08:52:43

TITLE 24 GENERAL NOTE

CONTRACTOR SHALL BE RESPONSIBLE FOR ALL WORK ASSOCIATED WITH FINAL INSPECTION AND APPLICABLE ACCEPTANCE REQUIREMENT PROCEDURES. INCLUDE ALL COSTS IN THE BASE BID. THIS SHALL INCLUDE, BUT NOT BE LIMITED TO, CONSTRUCTION INSPECTION, MEASUREMENTS, MONITORING, FUNCTIONAL TESTING, CALIBRATING, ETC. CONTRACTOR SHALL ASSUME THE ROLE OF "FIELD TECHNICIAN" AND "RESPONSIBLE PERSON" AS DEFINED IN STATE OF CALIFORNIA 2019 BUILDING ENERGY EFFICIENCY STANDARDS NONRESIDENTIAL COMPLIANCE MANUAL SECTION 13.2.2.

SEE STATE OF CALIFORNIA 2019 BUILDING ENERGY EFFICIENCY STANDARDS SECTIONS 10-103(a)3A AND 10-103(a)3B AND SECTION 130.4 FOR MORE INFORMATION.

SEE STATE OF CALIFORNIA 2019 BUILDING ENERGY EFFICIENCY STANDARDS NONRESIDENTIAL COMPLIANCE MANUAL CHAPTER 13 FOR MORE DETAILED REQUIREMENTS / INFORMATION.

SEE STATE OF CALIFORNIA 2019 BUILDING ENERGY EFFICIENCY STANDARDS RESIDENTIAL COMPLIANCE MANUAL CHAPTER 2 FOR MORE DETAILED REQUIREMENTS / INFORMATION.

PROVIDE COMPLETED INSTALLATION CERTIFICATE(S) AND CERTIFICATE(S) OF ACCEPTANCE AS REQUIRED TO THE SATISFACTION OF THE ENFORCEMENT AGENCY.

TITLE 24 PROCEDURES FOR TESTING AND ADJUSTING

CONTRACTOR SHALL BE RESPONSIBLE FOR ALL WORK ASSOCIATED WITH FINAL INSPECTION AND APPLICABLE ACCEPTANCE REQUIREMENT PROCEDURES. INCLUDE ALL COSTS IN THE BASE BID. THIS SHALL INCLUDE, BUT NOT BE LIMITED TO, CONSTRUCTION INSPECTION, MEASUREMENTS, MONITORING, FUNCTIONAL TESTING, CALIBRATING, ETC. CONTRACTOR SHALL ASSUME THE ROLE OF "FIELD TECHNICIAN" AND "RESPONSIBLE PERSON" AS DEFINED IN STATE OF CALIFORNIA 2019 BUILDING ENERGY EFFICIENCY STANDARDS NONRESIDENTIAL COMPLIANCE MANUAL SECTION 13.2.2.

LIGHTING CONTROL ACCEPTANCE TESTING AND ADJUSTING PROCEDURES – REFER TO NRCA-LTI-02-A DOCUMENTS.

AUTOMATIC DAYLIGHT CONTROL ACCEPTANCE TESTING AND ADJUSTING PROCEDURES – REFER TO NRCA-LTI-03-A DOCUMENTS.

DEMAND RESPONSE LIGHTING CONTROL ACCEPTANCE TESTING AND ADJUSTING PROCEDURES – REFER TO NRCA-LTI-04-A DOCUMENTS.

INSTITUTIONAL TUNING PAF ACCEPTANCE TESTING AND ADJUSTING PROCEDURES – REFER TO NRCA-LTI-05-A DOCUMENTS.

OUTDOOR LIGHTING CONTROL ACCEPTANCE TESTING AND ADJUSTING PROCEDURES – REFER TO NRCA-LTO-02-A DOCUMENTS.

ALL LIGHTING CONTROLS TESTING AND ADJUSTING DOCUMENTS NOTED ABOVE ARE AVAILABLE FROM THE CALIFORNIA ENERGY COMMISSION WEB SITE AT:

https://ww2.energy.ca.gov/title24/2019standards/2019_compliance_documents/Nonresidential_Documents/NRCA/

IDENTIFICATION STAMP
DIV. OF THE STATE ARCHITECT
APP: 02-118630 INC:
REVIEWED FOR
SS ☐ FLS ☐ ACS ☑
DATE: 04/13/2021

OFFICE OF THE STATE FIRE MARSHAL
APPROVED FIRE AND PANIC ONLY
Approval of this plan does not authorize or approve any omission or deviation from applicable regulations. Final approval is subject to field inspection. One set of approved plans shall be available on the project site at all times.
PERMIT NO.: 28-N-2532-CP
REVIEWED BY: LEO CATALFO, OSFM
DATE: 4/ /2021

DGS GENERAL SERVICES
Department of General Services
State of California
Real Estate Services Division
Project Management & Development Branch
707 Third Street, Suite 4-105
West Sacramento, California 95605

NICHOLS MELBURG & ROSSETTO ARCHITECTS + ENGINEERS
300 Knollcrest Drive
Redding, CA. 96002
(530) 222-3300 (530) 222-3538 FAX
http://www.nmrdesign.com

Copyright © 2019
All ideas, designs, arrangements and plans indicated or represented by this drawing are owned by, and the property of, NICHOLS, MELBURG and ROSSETTO and were created, evolved and developed for use on, and in connection with, the specified project. None of such ideas, designs, arrangements or plans shall be used by, or disclosed to, any person, firm or corporation for any purpose whatsoever without the written permission of NICHOLS, MELBURG and ROSSETTO.

LICENSE STAMPS

REGISTERED PROFESSIONAL ENGINEER
RAYMOND W. SWARTZ
No. E15610
12/31/2021
ELECTRICAL
STATE OF CALIFORNIA
Date Signed: 3/25/2021

CONSULTANT
tklsc COLLABORATIVE
11870 Pierce Street, Suite 160
Riverside, California 92505
951.299.4160 www.tk1sc.com
Project Leader - Jerry Leonhardt
Electrical Lead - Reid Cordry
tk1sc Job #:2019-0228A

DRAWING STATUS
CONSTRUCTION DOCUMENTS

ISSUE

No.	Date	Description
1	10/20/2020	INITIAL PLAN REVIEW
2	01/22/2021	AGENCY RESUBMITTAL
3	03/22/2021	AGENCY RESUBMITTAL

If drawing is not 30" x 42" it is a reduced print

PROJECT
RESIDENTIAL CENTER, UKIAH: REPLACEMENT OF EXISTING RESIDENTIAL CENTER
440 EAST HILL ROAD
WILLITS, CALIFORNIA 95490
MENDOCINO COUNTY
CALIFORNIA CONSERVATION CORP

Supervisor	Designed	Drawn
		Author

DSA Application No.
02-118630

SHEET TITLE
TITLE 24 ADMIN BUILDING

DGS Project Number: 0000000000001826
NMR Project Number: 18-6456

Reference North: NORTH
Sheet Scale:
Sheet Number: E505A

ISSUE DATE
July 9, 2021

Plot Date: 3/22/2021 9:00:03 AM
File Name: BIM 360:/CCC Willits Residential Center/E_CCC Willits_COMMON_2019-0228A.rvt

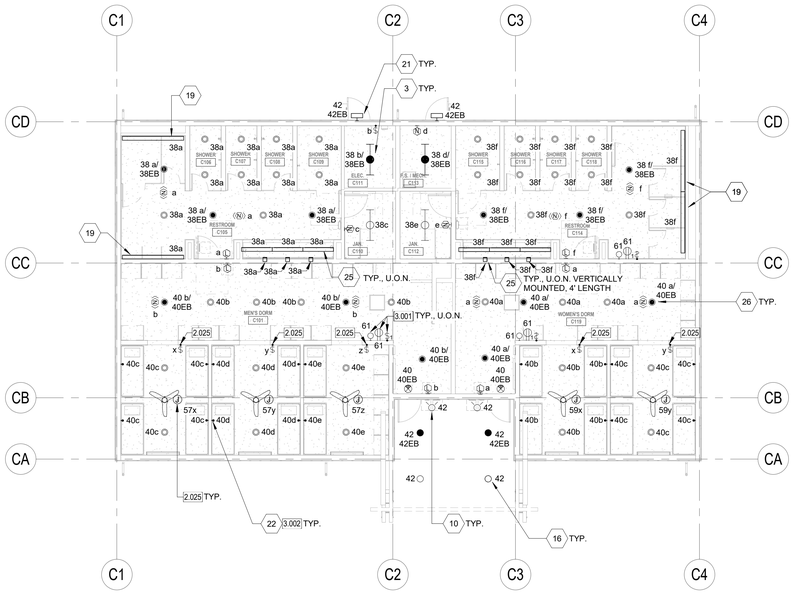

COMET LIGHTING PLAN

SCALE: 1/8" = 1'-0"

KEYNOTES

2.025 CONNECT TO CEILING FAN PER MANUFACTURER'S REQUIREMENTS.

3.001 RECEPTACLE, SWITCH, AND LIGHT FIXTURE MOUNTED ABOVE CEILING. PROVIDE A KEYLESS PLASTIC LAMP HOLDER LEVITON #R50-08829-CW4, OR EQUAL, MOUNTED ON A JUNCTION BOX WITH ONE LED A19 9W LAMP. COORDINATE AND VERIFY EXACT MOUNTING LOCATION IN FIELD WITH MECHANICAL EQUIPMENT INSTALLER PRIOR TO ROUGH IN.

3.002 PROVIDE TWO READING LIGHTS AT EACH BUNK BED, ONE FOR THE UPPER BED AND ONE FOR THE LOWER BED. VERIFY EXACT LOCATION PRIOR TO INSTALLATION.

VOLTAGE DROP WORKSHEET: REFERENCE ONLY

1. ALL BRANCH CIRCUITS ARE DESIGNED TO LIMIT VOLTAGE DROP 3% OR LESS USING THE FOLLOWING CRITERIA:

208 VOLT, 1 PHASE LOAD:

LOAD (VA)	DISTANCE	CU CONDUCTOR SIZE
0-1000 VA (500 PER PHASE) 0-4.8 AMPS	0-225 FT	#12
	226-360 FT	#10
	361-572 FT	#8
1001-2000 VA (1,000 PER PHASE) 4.8-9.6 AMPS	0-151 FT	#12
	152-240 FT	#10
	241-380 FT	#8
	381-604 FT	#6
2001-3,328 VA (1,664 PER PHASE) 9.6-16 AMPS	0-78 FT	#12
	79-125 FT	#10
	126-198 FT	#8
3329-4,992 VA (2,496 PER PHASE) 16-24 AMPS	0-52 FT	#12
	53-83 FT	#10
	84-132 FT	#8

120 VOLT, 1 PHASE LOAD:

LOAD (VA)	DISTANCE	CU CONDUCTOR SIZE
0-1000 VA 0-8 AMPS	0-130 FT	#12
	131-205 FT	#10
	205-330 FT	#8
1001-1500 VA 8-12.5 AMPS	0-87 FT	#12
	88-138 FT	#10
	139-219 FT	#8
	220-350 FT	#6
1501-1920 VA 12.5-16 AMPS	0-68 FT	#12
	69-108 FT	#10
	109-172 FT	#8
	173-273 FT	#6
1921-2880 VA 16-24 AMPS	0-72 FT	#10
	73-114 FT	#8
	115-182 FT	#6

ANY 3 PHASE LOADS GREATER THAN 30 AMPS ARE SHOWN ON THE FEEDER SCHEDULE OR MOTORIZED EQUIPMENT SCHEDULE WITH ASSOCIATED VOLTAGE DROP LIMITED TO 2% OR LESS.

LIGHTING PLAN GENERAL NOTES:

1. REFER TO ARCHITECTURAL PLANS FOR EXACT LOCATION AND ELEVATION OF ALL LIGHTING FIXTURES AND ALL DEVICES. ALL WALL-MOUNTED DEVICE HEIGHTS SHALL BE VERIFIED WITH THE ARCHITECT PRIOR TO ROUGH-IN.
2. VERIFY EXACT CEILING CONSTRUCTION WITH ARCHITECTURAL REFLECTED CEILING PLAN AND PROVIDE LIGHTING FIXTURES WITH ALL NECESSARY MOUNTING HARDWARE.
3. ALL RECESSED FIXTURES SHALL BE PROVIDED WITH ALL REQUIRED STRUCTURAL SUPPORTS AS REQUIRED BY THE CURRENTLY ADOPTED ISSUE OF THE IBC, OR CBC WHERE ADOPTED, IN ADDITION TO ANY LOCAL CODES
4. ALL COVE MOUNTED FIXTURES SHALL EXTEND THE FULL LENGTH OF THE COVE. CONTRACTOR TO FIELD MEASURE COVE LENGTH AND ORDER QUANTITY OF FIXTURES AS REQUIRED.
5. ALL DIMMING BRANCH CIRCUITS SHALL BE PROVIDED WITH A DEDICATED NEUTRAL CONDUCTOR FOR EACH ZONE/CHANNEL.
6. ALL FLUORESCENT DIMMING ZONES/CHANNELS SHALL BE PROVIDED WITH 3 LINE VOLTAGE CONDUCTORS (NEUTRAL, DIMMED HOT, SWITCHED HOT) OR 2 LINE VOLTAGE CONDUCTORS/2 CONTROL CONDUCTORS AS REQUIRED BY THE CONTROL/BALLAST TYPE.
7. ALL EMERGENCY BATTERY PACK FIXTURES SHALL BE PROVIDED WITH A CONSTANT HOT CONNECTION TO THE CHARGING LEAD. SEE GENERAL LIGHTING FIXTURE SCHEDULE NOTES FOR MORE INFORMATION.
8. REFER TO ARCHITECTURAL REFLECTED CEILING PLANS FOR EXIT SIGN CHEVRONS AND NUMBER OF FACES PER EXIT SIGN. ANY DISCREPANCIES BETWEEN EXIT SIGNS SHOWN ON THE ELECTRICAL AND ARCHITECTURAL PLANS SHALL BE BROUGHT TO THE ATTENTION OF THE ARCHITECT PRIOR TO ORDERING EXIT SIGNS.
9. WHEN EXPOSED CEILINGS OR OPEN GRID CONDITIONS OCCUR, THE CONTRACTOR WILL NEED TO PROVIDE THE FOLLOWING ITEMS:

   - ALL BRANCH CIRCUITS SHALL BE IN EMT.

   - ALL BRANCH CIRCUITS SHALL BE ROUTED, NEATLY TRAINED, AND IN PARALLEL TO STRUCTURES OR DUCT WORK. THE TERM "TRAINED" MEANS ALL PARALLEL CONDUITS SHALL MAINTAIN THE SAME SPATIAL RELATIONSHIP WITH EACH OTHER FOR ENTIRE RUN TO INCLUDE RADIUS BENDS AND SWEEPS.

   - VISUALLY OBJECTIONABLE BRANCH CIRCUITS WILL BE REROUTED AT THE REQUEST OF THE ARCHITECT AT NO ADDITIONAL COST.
10. ALL LED REMOTE INDICATORS FOR DUCT DETECTORS AND FIRE/SMOKE DAMPERS REQUIRED BY THE SFM SHALL BE LOCATED IN CEILINGS IN COORDINATION WITH ARCHITECT PRIOR TO ANY ROUGH-IN.
11. RECESSED FIXTURES LOCATED IN A FIRE-RATED CEILING OR WALL SHALL BE PROVIDED WITH A 5-SIDED RATED ENCLOSURE SO CONSTRUCTED AS TO ALLOW CODE AND MANUFACTURER-REQUIRED CLEARANCES BETWEEN THE FIXTURE AND THE ENCLOSURE.
12. PROVIDE REDUNDANT GROUND PATH IN ALL BRANCH CIRCUITS SERVING PATIENT CARE AREAS CONSISTING OF A SEPARATE, INSULATED EQUIPMENT GROUNDING CONDUCTOR PER NEC, OR CEC WHERE ADOPTED, ART 517.13.
13. PROVIDE ADDITIONAL J-BOX NEAR PANEL FOR MULTIPLE HOMERUN CIRCUITRY.
14. UNLESS SPECIFICALLY SHOWN AS (E), (R), (ER), (D), EXISTING OR NON-BOLD, ALL ELECTRICAL DEVICES SHOWN ARE NEW.
15. REFER TO GENERAL POWER PLAN NOTES AND COMMUNICATIONS PATHWAYS GENERAL NOTES FOR ADDITIONAL REQUIREMENTS WHEN POWER AND/OR DATA DEVICES ARE SHOWN ON THIS PLAN.
16. CONTRACTOR SHALL PROVIDE CONDUIT AND WIRE FOR ALL DEVICES TO PANELBOARD(S) INDICATED ON PLANS FOR A COMPLETE AND OPERABLE SYSTEM.
17. CONTRACTOR SHALL PROVIDE MINIMUM 2#12, 1#12G IN ¾" CONDUIT UNLESS OTHERWISE NOTED. REFERENCE WIRE SIZE TABLE CHART ABOVE. WHERE REQUIRED, CONDUIT AND WIRE SHALL BE UPSIZED TO MEET THE REQUIREMENT OF THE DEVICE BEING SERVED BY THE BRANCH CIRCUIT. WHERE CONDUIT AND WIRING IS INDICATED AT THE HOME RUN, WIRING AND CONDUIT SHALL CONTINUE AT THAT SIZE FOR THE ENTIRE LENGTH OF THE CIRCUIT.
18. CONTRACTOR SHALL FURNISH ADDITIONAL SWITCHLEGS OR HOT WIRES AS REQUIRED TO MEET THE CONTROL INTENT OF THE DOCUMENTS AND AS REQUIRED BY CODE (I.E. EMERGENCY LIGHTING AND SWITCHED RECEPTACLES).
19. MULTIPLE CIRCUITS MAY BE USED IN A SINGLE RACEWAY, NO MORE THAN (3) DEDICATED CIRCUITS OR (4) CURRENT CARRYING CONDUCTORS SHALL BE INSTALLED IN ANY RACEWAY UNLESS OTHERWISE NOTED. WHERE A COMMON GROUNDED CONDUCTOR IS USED FOR MULTIPLE INDIVIDUAL BRANCH CIRCUITS, PER SECTIONS CEC 200.4, 250.122, 310.15(B)(2), CONDUIT SIZE SHALL BE INCREASED AS REQUIRED FOR THE CONDUCTORS INCLUDING TEMPERATURE DERATING PER CEC TABLE C1.
20. FURNISH AND INSTALL JUNCTION BOXES AS REQUIRED TO MEET MAXIMUM BEND REQUIREMENTS FOR PULLING WIRES PER CEC 358.26. JUNCTION BOXES SHALL BE SIZED AS REQUIRED PER CEC 314.28 UNLESS OTHERWISE NOTED.

WALL TYPES LEGEND

SEE SHEET G121 FOR ASSEMBLY TYPES

EXTERIOR

2 x 6 WOOD STUD WALL - NON RATED	0-W1-6	* ● #
2 x 12 WOOD STUD WALL - NON RATED	0-W1-12	* ● #

INTERIOR

2 x 4 WOOD STUD WALL - NON RATED	0-W2-4	* ● #
2 x 6 WOOD STUD WALL - NON RATED	0-W2-6	* ● #
2 x 8 WOOD STUD WALL - NON RATED	0-W2-8	* ● #
2 x 12 WOOD STUD WALL - NON RATED	0-W2-12	* ● #
2 x 4 WOOD STUD WALL - ACOUSTIC	0-W5-4	* ● #
2 x 6 WOOD STUD WALL - ACOUSTIC	0-W5-6	* ● #
2 X 4 WOOD STUD WALL - 1-HR FIRE PARTITION W/ PROTECTED OPENINGS	1-W3-4	* ● #
2 X 6 WOOD STUD WALL - 1-HR FIRE PARTITION W/ PROTECTED OPENINGS	1-W3-6	* ● #

WALL TYPE NOTES

PARTITION SYMBOL

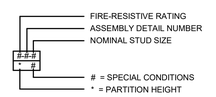

IDENTIFICATION STAMP
DIV. OF THE STATE ARCHITECT
APP: 02-118630 INC:
REVIEWED FOR
SS ☐ FLS ☐ ACS ☑
DATE: 04/13/2021

OFFICE OF THE STATE FIRE MARSHAL
APPROVED FIRE AND PANIC ONLY
Approval of this plan does not authorize or approve any omission or deviation from applicable regulations. Final approval is subject to field inspection. One set of approved plans shall be available on the project site at all times.
PERMIT NO.: 20-N 2332-CP
REVIEWED BY: LEO CATALO, OSFM
DATE: 4 / 1 /2021

GENERAL SERVICES
Department of General Services
State of California
Real Estate Services Division
Project Management & Development Branch
707 Third Street, Suite 4-105
West Sacramento, California 95605

NICHOLS MELBURG & ROSSETTO
ARCHITECTS + ENGINEERS
300 Knollcrest Drive
Redding, CA. 96002
(530) 222-3300 (530) 222-3538 FAX
http://www.nmrdesign.com

Copyright © 2019
All ideas, designs, arrangements and plans indicated or represented by this drawing are owned by, and the property of, NICHOLS, MELBURG and ROSSETTO and were created, evolved and developed for use on, and in connection with, the specified project. None of such ideas, designs, arrangements or plans shall be used by, or disclosed to, any person, firm or corporation for any purpose whatsoever without the written permission of NICHOLS, MELBURG and ROSSETTO.

LICENSE STAMPS

REGISTERED PROFESSIONAL ENGINEER RAYMOND W. SWEETEN No. E15610 12/31/2021 ELECTRICAL STATE OF CALIFORNIA
Date Signed: 3/25/2021

CONSULTANT
tklsc COLLABORATIVE
11870 Pierce Street, Suite 160
Riverside, California 92505
951.299.4160 www.tk1sc.com
Project Leader - Jerry Leonhardt
Electrical Lead - Reid Cordry
tk1sc Job #:2019-0228A

DRAWING STATUS
CONSTRUCTION DOCUMENTS

ISSUE

No.	Date	Description
1	10/20/2020	INITIAL PLAN REVIEW
2	01/22/2021	AGENCY RESUBMITTAL
3	03/22/2021	AGENCY RESUBMITTAL

If drawing is not 30" x 42" it is a reduced print

PROJECT
RESIDENTIAL CENTER, UKIAH: REPLACEMENT OF EXISTING RESIDENTIAL CENTER
440 EAST HILL ROAD
WILLITS, CALIFORNIA 95490
MENDOCINO COUNTY
CALIFORNIA CONSERVATION CORP

Supervisor	Designed	Drawn
		Author

DSA Application No.
XX-XXXXXX

SHEET TITLE
COMET LIGHTING PLAN

DGS Project Number	NMR Project Number
XXXXX	18-6456

Reference North | Sheet Scale: As indicated | Sheet Number: E101C

ISSUE DATE
July 9, 2021

Plot Date: 3/22/2021 8:50:47 AM
File Name: BIM 360:/CCC Willits Residential Center/E_CCC Willits_COMET_2019-0228A.rvt

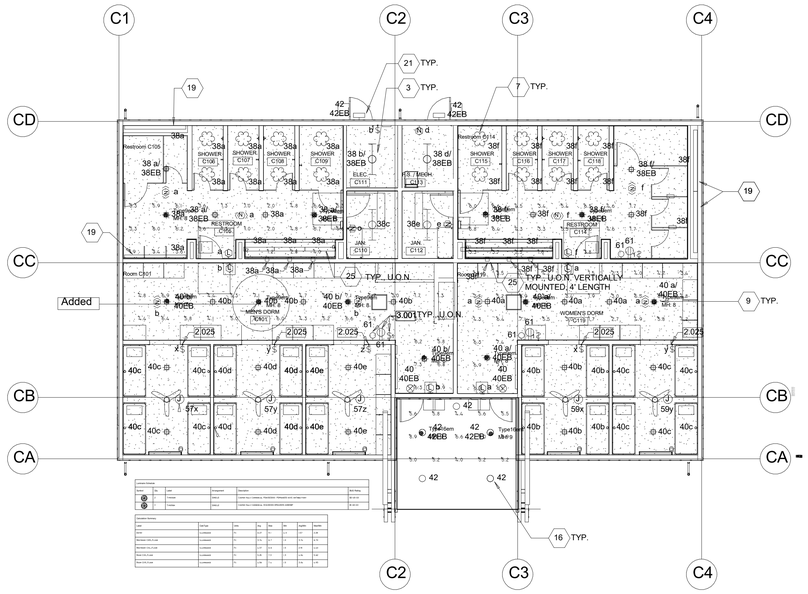

COMET EMERGENCY LIGHTING PHOTOMETRIC PLAN

SCALE: 1/8" = 1'-0"

IDENTIFICATION STAMP
DIV. OF THE STATE ARCHITECT
APP: 02-118630 INC:
REVIEWED FOR
SS ☐ FLS ☐ ACS ☑
DATE: 04/13/2021

OFFICE OF THE STATE FIRE MARSHAL
APPROVED FIRE AND PANIC ONLY
Approval of this plan does not authorize or approve any omission or deviation from applicable regulations. Final approval is subject to field inspection. One set of approved plans shall be available on the project site at all times.
PERMIT NO: 26 N 2332 CP
REVIEWED BY: LEO CATALLO, OSFM
DATE: 4 / 1 /2021

GENERAL SERVICES
Department of General Services
State of California
Real Estate Services Division
Project Management & Development Branch
707 Third Street, Suite 4-105
West Sacramento, California 95605

NICHOLS MELBURG & ROSSETTO
ARCHITECTS + ENGINEERS
300 Knollcrest Drive
Redding, CA. 96002
(530) 222-3300 (530) 222-3538 FAX
http://www.nmrdesign.com

Copyright © 2019
All ideas, designs, arrangements and plans indicated or represented by this drawing are owned by, and the property of, NICHOLS, MELBURG and ROSSETTO and were created, evolved and developed for use on, and in connection with, the specified project. None of such ideas, designs, arrangements or plans shall be used by, or disclosed to any person, firm or corporation for any purpose whatsoever without the written permission of NICHOLS, MELBURG and ROSSETTO.

LICENSE STAMPS

REGISTERED PROFESSIONAL ENGINEER RAYMOND W. SWEET No. E15610 12/31/2021 ELECTRICAL STATE OF CALIFORNIA
Date Signed: 3/25/2021

CONSULTANT
tk1sc COLLABORATIVE
11870 Pierce Street, Suite 160
Riverside, California 92505
951.299.4160 www.tk1sc.com
Project Leader - Jerry Leonhardt
Electrical Lead - Reid Cordry
tk1sc Job #:2019-0228A

DRAWING STATUS
CONSTRUCTION DOCUMENTS

ISSUE

No.	Date	Description
1	10/20/2020	INITIAL PLAN REVIEW
2	01/22/2021	AGENCY RESUBMITTAL
3	03/22/2021	AGENCY RESUBMITTAL

If drawing is not 30" x 42" it is a reduced print

PROJECT
RESIDENTIAL CENTER, UKIAH: REPLACEMENT OF EXISTING RESIDENTIAL CENTER
440 EAST HILL ROAD
WILLITS, CALIFORNIA 95490
MENDOCINO COUNTY
CALIFORNIA CONSERVATION CORP

Supervisor	Designed	Drawn
		Author

DSA Application No.
XX-XXXXX

SHEET TITLE
COMET EMERGENCY LIGHTING PHOTOMETRIC PLAN

DGS Project Number	NMR Project Number
XXXXX	18-6456

Reference North
Sheet Scale 1/8" = 1'-0"
Sheet Number E102C

ISSUE DATE
July 9, 2021

Plot Date: 3/22/2021 8:50:48 AM
File Name: BIM 360://CCC Willits Residential Center/E_CCC Willits_COMET_2019-0228A.rvt

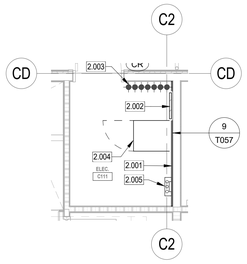

FLOOR PLAN

2 BLDG C - ENLARGED IDF PLANS C108

SCALE: 1/4" = 1'-0"

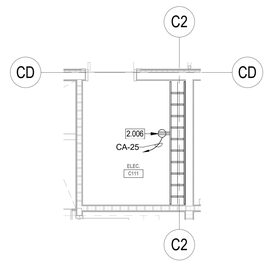

LADDER RUNWAY PLAN

3 BLDG C - Enlarged IDF Ladder Runway Plan

SCALE: 1/4" = 1'-0"

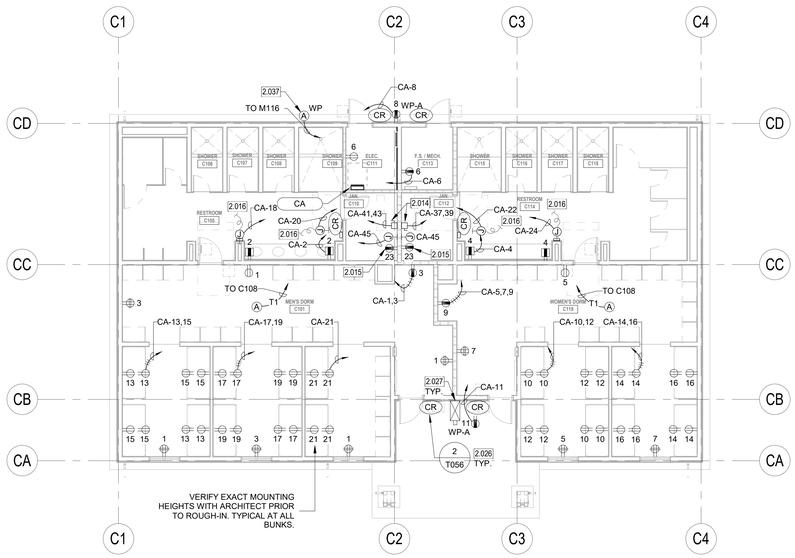

NORTH

COMET POWER AND SIGNAL PLAN

SCALE: 1/8" = 1'-0"

WALL TYPE NOTES

PARTITION SYMBOL

VOLTAGE DROP WORKSHEET: REFERENCE ONLY

1. ALL BRANCH CIRCUITS ARE DESIGNED TO LIMIT VOLTAGE DROP 3% OR LESS USING THE FOLLOWING CRITERIA:

208 VOLT, 1 PHASE LOAD:

LOAD (VA)	DISTANCE	CU CONDUCTOR SIZE
0-1000 VA (500 PER PHASE)	0-225 FT	#12
	226-360 FT	#10
0-4.8 AMPS	361-572 FT	#8
1001-2000 VA (1,000 PER PHASE)	0-151 FT	#12
	152-240 FT	#10
4.8-9.6 AMPS	241-380 FT	#8
	381-604 FT	#6
2001-3,328 VA (1,664 PER PHASE)	0-78 FT	#12
	79-125 FT	#10
9.6-16 AMPS	126-198 FT	#8
3329-4,992 VA (2,496 PER PHASE)	0-52 FT	#12
	53-83 FT	#10
16-24 AMPS	84-132 FT	#8

120 VOLT, 1 PHASE LOAD:

LOAD (VA)	DISTANCE	CU CONDUCTOR SIZE
0-1000 VA	0-130 FT	#12
0-8 AMPS	131-205 FT	#10
	205-330 FT	#8
1001-1500 VA	0-87 FT	#12
8-12.5 AMPS	88-138 FT	#10
	139-219 FT	#8
	220-350 FT	#6
1501-1920 VA	0-68 FT	#12
12.5-16 AMPS	69-108 FT	#10
	109-172 FT	#8
	173-273 FT	#6
1921-2880 VA	0-72 FT	#10
16-24 AMPS	73-114 FT	#8
	115-182 FT	#6

ANY 3 PHASE LOADS GREATER THAN 30 AMPS ARE SHOWN ON THE FEEDER SCHEDULE OR MOTORIZED EQUIPMENT SCHEDULE WITH ASSOCIATED VOLTAGE DROP LIMITED TO 2% OR LESS.

WALL TYPES LEGEND

SEE SHEET G121 FOR ASSEMBLY TYPES

EXTERIOR

	2 x 6 WOOD STUD WALL - NON RATED	0-W1-6 * • #
	2 x 12 WOOD STUD WALL - NON RATED	0-W1-12 * • #

INTERIOR

	2 x 4 WOOD STUD WALL - NON RATED	0-W2-4 * • #
	2 x 6 WOOD STUD WALL - NON RATED	0-W2-6 * • #
	2 x 8 WOOD STUD WALL - NON RATED	0-W2-8 * • #
	2 x 12 WOOD STUD WALL - NON RATED	0-W2-12 * • #
	2 x 4 WOOD STUD WALL - ACOUSTIC	0-W5-4 * • #
	2 x 6 WOOD STUD WALL - ACOUSTIC	0-W5-6 * • #
	2 X 4 WOOD STUD WALL - 1-HR FIRE PARTITION W/ PROTECTED OPENINGS	1-W3-4 * • #
	2 X 6 WOOD STUD WALL - 1-HR FIRE PARTITION W/ PROTECTED OPENINGS	1-W3-6 * • #

KEYNOTES

2.001 PLYWOOD BACKBOARD AND TELECOMMUNICATIONS BUSBAR BY E.C. SCS CONTRACTOR SHALL INSTALL #6 WITH GREEN INSULATION TO EACH DATA EQUIPMENT RACK/CABINET. OVERHEAD LADDER TRAY/LADDER RACK, TELECOMMUNICATIONS CONDUITS, TELECOMMUNICATIONS CABLE TRAY(S), ANTI STATIC TILE GROUNDING POINTS ETC. AS REQUIRED. CONNECTIONS SHALL BE MADE WITH 2 HOLE COMPRESSION CONNECTORS. ALL CONNECTIONS SHALL BE BARE METAL TO BARE METAL USING APPROPRIATE ANTIOXIDANT COMPOUND.

2.002 WALL FIELD FOR CAMPUS COPPER BACKBONE CABLE

2.003 4" UNDERGROUND CONDUIT FOR CAMPUS BACKBONE CABLE

2.004 WALL MOUNT CABINET, (CPI PN#12419-736, CPI PN#40975-001, CPI PN#40973-001) ON EXISTING WALL BOARD. SCS CONTRACTOR TO VERIFY PROPER SPACE AND CLEARANCE BEFORE INSTALLATION.

2.005 ANSI-J-STD 607A COMPLIANT U.L.-LISTED TELECOMMUNICATIONS MAIN GROUND BUSBAR (TMGB) CHATSWORTH #40153-020 OR EQUAL BY HARGER. MOUNT 12"A.F.F. PROVIDE 1/8" BRASS ENGRAVED NAMEPLATE WITH ABBREVIATION "T.M.G.B." AND ATTACH TO BUS BAR. PROVIDE #6 GROUND CONDUCTOR WITH GREEN INSULATION TO EACH DATA EQUIPMENT RACK/CABINET, OVERHEAD LADDER TRAY/LADDER RACK, ETC. AS REQUIRED. CONNECTIONS SHALL BE MADE WITH 2 HOLE COMPRESSION CONNECTORS. CONNECTIONS SHALL BE BARE METAL TO BARE METAL USING APPROPRIATE ANTIOXIDANT COMPOUND. PROVIDE ALL OTHER GROUNDING REQUIREMENTS AS DETAILED IN THE PATHWAYS & GROUNDING RISER DIAGRAM SHEET T4.07. ELECTRICAL CONTRACTOR SHALL PROVIDE 1/2"C. WITH #6AWG WITH GREEN INSULATION FROM TMGB TO GROUND BUSBAR LOCATED INSIDE MPOE ROOM ELECTRICAL PANEL. ELECTRICAL CONTRACTOR SHALL PROVIDE TELECOMMUNICATIONS BONDING CONDUCTOR (TBC) CONSISTING OF (1) 1"C., W/ #1AWG (U.O.N.) WITH GREEN INSULATION CONNECTING MAIN BUILDING GROUND BUS BAR LOCATED IN MAIN ELECTRICAL ROOM TO THE TELECOMMUNICATIONS MAIN GROUNDING BUSBAR (TMGB) UTILIZING 2-HOLE COMPRESSION CONNECTORS. LABEL EACH END OF TBC WITH A GROUND WARNING TAG (PANDUIT #PT-BGRND OR EQUAL).

2.006 NEMA L6-30R 30A TWIST-LOCK MOUNTED TO LADDER RACK, PROVIDED BY E.C.

2.014 CONNECT COMPLETE TO WATER HEATER AS REQUIRED. PROVIDE CODE SIZED DISCONNECT SWITCH AT THE WATER HEATER AS REQUIRED. COORDINATE LOCATION WITH PLUMBING CONTRACTOR PRIOR TO ROUGH-IN.

2.015 CONNECT CIRCULATION PUMP. TIME CLOCK AND/OR AQUASTAT AS REQUIRED. PROVIDE CODE SIZED DISCONNECT SWITCH AS REQUIRED. SEE PLUMBING PLANS FOR MORE INFORMATION. COORDINATE LOCATION WITH PLUMBING CONTRACTOR PRIOR TO ROUGH-IN.

2.016 PROVIDE CONNECTION TO ELECTRIC HAND DRYERS PER MANUFACTURER'S REQUIREMENTS.

2.026 ACCESS CONTROL SYSTEM CARD READER WITH CONDUIT AND CABLING, PER SPECIFICATIONS. SEE SHEET T.056 FOR MORE INFORMATION.

2.027 CCTV LOCATION, EXTERIOR MOUNT IOP CAMERA. PROVIDE AND INSTALL FLUSH MOUNTED SINGLE GANG J-BOX WITH 1" WATERPROOF SLEEVE TO THE ACCESSIBLE CEILING SPACE FOR FUTURE EXTERIOR CCTV CAMERA. PROVIDE (1)CAT-6A CABLE TO EQUIPMENT PATCH PANEL IN NEAREST IDF/MDF ROOM. PROVIDE FIRE STOP PER CODE. MINIMUM 1/2" DEEP FIRE STOP PUTTY ON EACH SIDE FOR SOUND ISOLATION FOR FIRE RATED WALL PENETRATIONS. COORDINATE FINAL LOCATION WITH ARCH RCP. SEE SHEET T055 FOR MORE INFORMATION.

2.037 NEMA WIRELESS ACCESS POINT ENCLOSURE OBERON MODEL #1026-14126 OR EQUAL - FOR OWNER'S WAP ANTENNA AND ACCESS POINT EQUIPMENT. COORDINATE FINAL MOUNTING LOCATION AND HEIGHT OF NEMA BOXES WITH OWNER PRIOR TO ROUGH IN. PROVIDE CAT-6 CABLE FROM ACCESS POINT TO EQUIPMENT PATCH PANEL IN NEAREST IDF/MDF ROOM.

POWER PLAN GENERAL NOTES:

1. ALL RECEPTACLES ON COMMON WALLS SHALL BE SEPARATE BOXES AND OFFSET 24-INCHES MINIMUM.
2. ALL PENETRATIONS THROUGH FIRE RATED WALLS SHALL BE PROTECTED FROM THE SPREAD OF FIRE WITH AN APPROVED FIRESTOP SYSTEM EQUAL OR GREATER THAN THE FIRE RATING OF THE WALL.
3. ALL WALL-MOUNTED DEVICE HEIGHTS SHALL BE VERIFIED WITH THE ARCHITECT PRIOR TO ROUGH-IN.
4. ALL FURNITURE FEED LOCATIONS TO BE VERIFIED WITH ARCHITECT AND FURNITURE VENDOR PRIOR TO ROUGH-IN.
5. ALL FURNITURE WHIPS SHALL BE TRIMMED TO REDUCE EXCESS WHIP LENGTH.
6. WHEN EXPOSED CEILINGS OR OPEN GRID CONDITIONS OCCUR, THE CONTRACTOR WILL NEED TO PROVIDE THE FOLLOWING ITEMS:

   - ALL BRANCH CIRCUITS SHALL BE IN EMT.

   - ALL BRANCH CIRCUITS SHALL BE ROUTED NEATLY AND IN PARALLEL TO STRUCTURES OR DUCT WORK.

   - VISUALLY OBJECTIONABLE BRANCH CIRCUITS SHALL BE REROUTED AT THE REQUEST OF THE ARCHITECT AT NO ADDITIONAL COST.
7. EXPOSED CABLE/CONDUCTORS INSTALLED IN A PLENUM SPACE SHALL CONFORM TO NEC, OR CEC WHERE ADOPTED, ARTICLE 300.22(C).
8. PROVIDE G.F.C.I. TYPE RECEPTACLE(S) OR RECEPTACLE(S) PROTECTED BY A GFCI CIRCUIT BREAKER(S) WHEN LOCATED WITHIN 6 FEET OF ANY SINK OR THERAPEUTIC TUB, LAUNDRY AREA, SERVING ANY DRINKING FOUNTAIN OR VENDING MACHINE, WITHIN ANY KITCHEN SPACE AND/OR LOCATED OUTDOORS. WHERE RECEPTACLES ARE NOT READILY ACCESSIBLE, PROVIDE GFCI CIRCUIT BREAKER(S) TO PROTECT THE RESPECTIVE BRANCH CIRCUIT AND PROVIDE ADDITIONAL NEUTRAL CONDUCTORS IN THE BRANCH CIRCUITING AS REQUIRED TO ENSURE PROPER GFCI FUNCTION
9. PROVIDE OCCUPANCY SENSOR/LIGHTING CONTROL SYSTEM CONTROLLED RECEPTACLE RELAY(S) AS REQUIRED TO SWITCH CONTROLLED RECEPTACLES. CONNECT BRANCH CIRCUITRY AND CONTROL WIRING AS REQUIRED TO ALLOW OCCUPANCY SENSOR/LIGHTING CONTROL SYSTEM RELAY TO SWITCH STANDALONE AND/OR SYSTEMS FURNITURE CONTROLLED RECEPTACLES AS INDICATED ON PLANS. PROVIDE ADDITIONAL CONDUIT, WIRING AND PATHWAYS NECESSARY TO CONNECT BRANCH CIRCUITRY AND CONTROL WIRING TO REMOTE RELAYS TO INCLUDE RELAY(S) LOCATED ON ALTERNATE FLOORS, IN ELECTRICAL ROOMS, ETC.
10. UNLESS SPECIFICALLY SHOWN AS (E), (R), (ER), (D), EXISTING OR NON-BOLD, ALL ELECTRICAL DEVICES SHOWN ARE NEW.
11. PROVIDE REDUNDANT GROUND PATH IN ALL BRANCH CIRCUITS SERVING PATIENT CARE AREAS CONSISTING OF A SEPARATE, INSULATED EQUIPMENT GROUNDING CONDUCTOR PER NEC, OR CEC WHERE ADOPTED, ART 517.13.
12. CONTRACTOR SHALL PROVIDE CONDUIT AND WIRE FOR ALL DEVICES TO PANELBOARD(S) INDICATED ON PLANS FOR A COMPLETE AND OPERABLE SYSTEM.
13. CONTRACTOR SHALL PROVIDE MINIMUM 2#12, 1#12G IN ½" CONDUIT UNLESS OTHERWISE NOTED. REFERENCE WIRE SIZE TABLE CHART ABOVE. WHERE REQUIRED, CONDUIT AND WIRE SHALL BE UPSIZED TO MEET THE REQUIREMENT OF THE DEVICE BEING SERVED BY THE BRANCH CIRCUIT. WHERE CONDUIT AND WIRING IS INDICATED AT THE HOME RUN, WIRING AND CONDUIT SHALL CONTINUE AT THAT SIZE FOR THE ENTIRE LENGTH OF THE CIRCUIT.
14. CONTRACTOR SHALL FURNISH ADDITIONAL SWITCHLEGS OR HOT WIRES AS REQUIRED TO MEET THE CONTROL INTENT OF THE DOCUMENTS AND AS REQUIRED BY CODE (I.E. EMERGENCY LIGHTING AND SWITCHED RECEPTACLES).
15. MULTIPLE CIRCUITS MAY BE USED IN A SINGLE RACEWAY, NO MORE THAN (3) DEDICATED CIRCUITS OR (4) CURRENT CARRYING CONDUCTORS SHALL BE INSTALLED IN ANY RACEWAY UNLESS OTHERWISE NOTED. WHERE A COMMON GROUNDED CONDUCTOR IS USED FOR MULTIPLE INDIVIDUAL BRANCH CIRCUITS, PER SECTIONS CEC 200.4, 250.122, 310.15(B)(2), CONDUIT SIZE SHALL BE INCREASED AS REQUIRED FOR THE CONDUCTORS INCLUDING TEMPERATURE DERATING PER CEC TABLE C1.
16. FURNISH AND INSTALL JUNCTION BOXES AS REQUIRED TO MEET MAXIMUM BEND REQUIREMENTS FOR PULLING WIRES PER CEC 358.26. JUNCTION BOXES SHALL BE SIZED AS REQUIRED PER CEC 314.28 UNLESS OTHERWISE NOTED.

COMMUNICATIONS PATHWAYS GENERAL NOTES

1. CONDUITS SHALL, (a) CONTAIN NO CONTINUOUS SECTIONS LONGER THAN 30M (98 FT.), AND, (b) CONTAIN NO MORE THAN (2) 90° BENDS OR (1) REVERSE BEND WITHOUT INSTALLING A PULLBOX. SPLIT CONDUITS IN PLACE OF PULLBOXES ARE UNACCEPTABLE.
2. CONDUITS SHALL CONTAIN PLASTIC OR NYLON PULL TAPE RATED AT 200 LBS. WITH A MINIMUM OF 5 FEET OF EXTRA PULL TAPE COILED AT EACH END.
3. CONDUIT BEND RADIUS SHALL BE (a) A MINIMUM OF 6 TIMES THE INTERNAL CONDUIT DIAMETER FOR CONDUITS 2" IN DIAMETER OR LESS, AND, (b) 10 TIMES THE INTERNAL CONDUIT DIAMETER FOR CONDUITS MORE THAN 2" IN DIAMETER.
4. TERMINATE CONDUIT STUBS AND SLEEVES THAT PROTRUDE THROUGH STRUCTURAL FLOORS 2"-3" ABOVE THE FLOOR SURFACE.
5. INSTALL BUSHINGS OR BELL ENDS AS REQUIRED ON ALL CONDUITS.
6. FLEX CONDUIT IS UNACCEPTABLE FOR USE AS A COMMUNICATIONS CONDUIT EXCEPT AT SEISMIC JOINTS AND/OR IF APPROVED IN WRITING BY THE ENGINEER.
7. ALL UNDER SLAB OR IN-SLAB CONDUITS SHALL BE INSTALLED IN A MANNER THAT PREVENTS WATER INFILTRATION OF THE CONDUIT. IT IS THE CONTRACTOR'S RESPONSIBILITY TO ENSURE GROUND WATER, RAIN WATER OR CONSTRUCTION WATER IS PREVENTED FROM ENTERING AND/OR REMOVED FROM THE CONDUITS PRIOR TO PLACEMENT OF COMMUNICATIONS CABLES. SEE ELECTRICAL SPECIFICATIONS, DETAILS AND PLANS FOR ADDITIONAL CONDUIT SEALING REQUIREMENTS.
8. ALL PULLBOXES SHALL BE SIZED AND INSTALLED PER ANSI-TIA-569-C. PULLBOXES FOR IN/UNDER SLAB CONDUIT RUNS ARE NOT PERMITTED UNLESS OTHERWISE NOTED. PULLBOXES FOR OVERHEAD CONDUIT RUNS SHALL BE LOCATED ABOVE ACCESSIBLE CEILINGS WITHIN THE ACCESSIBLE CEILING SPACE AND SUPPORTED INDEPENDENTLY FROM THE STRUCTURE AND CONDUIT SUPPORTS. PULLBOXES FOR ROOF MOUNTED OR EXTERIOR ABOVE GRADE APPLICATIONS SHALL BE NEMA 3R RATED. PULLBOXES SHALL BE SIZED ACCORDING TO THE FOLLOWING:

CONDUIT SIZE	WIDTH	LENGTH	DEPTH	WIDTH INCREASE PER ADDITIONAL CONDUIT
1"	4"	16"	3"	2"
2"	8"	36"	4"	5"
3"	12"	48"	5"	6"
4"	15"	60"	8"	8"

   FOR OTHER CONDUIT SIZES REFER TO ANSI/TIA-569-C TABLE 12. - LATEST PUBLISHED EDITION.
9. CONDUIT(S) SHALL EXIT A PULLBOX ON THE WALL OPPOSITE THE WALL ENTERED.
10. PROVIDE LABELING OF EACH CONDUIT PER GENERAL ELECTRICAL SPECIFICATIONS.
11. PROVIDE INTERNAL/EXTERNAL GAS AND WATER TIGHT MECHANICAL SEALING/PLUGGING OF EACH BUILDING ENTRY CONDUIT AS SPECIFIED ELSEWHERE IN THE DRAWINGS AND SPECIFICATIONS.

IDENTIFICATION STAMP
DIV. OF THE STATE ARCHITECT
APP: 02-118630 INC:
REVIEWED FOR
SS ☐ FLS ☐ ACS ☑
DATE: 04/13/2021

OFFICE OF THE STATE FIRE MARSHAL
APPROVED FIRE AND PANIC ONLY
Approval of this plan does not authorize or approve any omission or deviation from applicable regulations. Final approval is subject to field inspection. One set of approved plans shall be available on the project site at all times.
PERMIT NO.: 20-N-2332-CP
REVIEWED BY: LEO CATALLO, OSFM
DATE: 4 / 2021

DGS GENERAL SERVICES
Department of General Services
State of California
Real Estate Services Division
Project Management & Development Branch
707 Third Street, Suite 4-105
West Sacramento, California 95605

NICHOLS MELBURG & ROSSETTO ARCHITECTS + ENGINEERS
300 Knollcrest Drive
Redding, CA. 96002
(530) 222-3300 (530) 222-3538 FAX
http://www.nmrdesign.com

Copyright © 2019
All ideas, designs, arrangements and plans indicated or represented by this drawing are owned by, and the property of, NICHOLS, MELBURG and ROSSETTO and were created, evolved and developed for use on, and in connection with, the specified project. None of such ideas, designs, arrangements or plans shall be used by, or disclosed to any person, firm or corporation for any purpose whatsoever without the written permission of NICHOLS, MELBURG and ROSSETTO.

LICENSE STAMPS

REGISTERED PROFESSIONAL ENGINEER RAYMOND W. SWIFT No. E15610 12/31/2021 ELECTRICAL STATE OF CALIFORNIA
Date Signed: 3/25/2021

CONSULTANT
tklsc COLLABORATIVE
11870 Pierce Street, Suite 160
Riverside, California 92505
951.299.4160 www.tk1sc.com
Project Leader - Jerry Leonhardt
Electrical Lead - Reid Cordry
tk1sc Job #:2019-0228A

DRAWING STATUS
CONSTRUCTION DOCUMENTS

ISSUE

No.	Date	Description
1	10/20/2020	INITIAL PLAN REVIEW
2	01/22/2021	AGENCY RESUBMITTAL
3	03/22/2021	AGENCY RESUBMITTAL

If drawing is not 30" x 42" it is a reduced print

PROJECT
RESIDENTIAL CENTER, UKIAH: REPLACEMENT OF EXISTING RESIDENTIAL CENTER
440 EAST HILL ROAD
WILLITS, CALIFORNIA 95490
MENDOCINO COUNTY
CALIFORNIA CONSERVATION CORP

Supervisor	Designed	Drawn
		Author

DSA Application No.
XX-XXXXX

SHEET TITLE
COMET POWER AND SIGNAL PLAN

DGS Project Number	NMR Project Number
XXXXX	18-6456

Reference North
NORTH

Sheet Scale: As indicated

Sheet Number: E201C

ISSUE DATE
July 9, 2021

Plot Date: 3/22/2021 8:50:55 AM
File Name: BIM 360://CCC Willits Residential Center/E_CCC Willits_COMET_2019-0228A.rvt

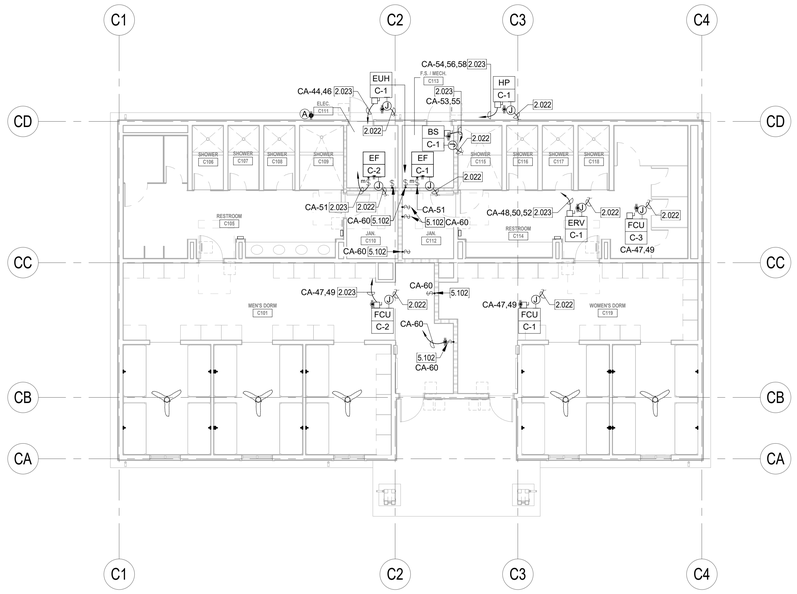

COMET MECHANICAL POWER PLAN

SCALE: 1/8" = 1'-0"

KEYNOTES

2.022	PROVIDE 3/4"C.O.(S) TO RESPECTIVE CONTROL DEVICE(S) FOR CONTROL WIRING. REFER TO THE EQUIPMENT CONTROL WIRING DIAGRAMS FOR ADDITIONAL INFORMATION.
2.023	REFER TO MOTORIZED EQUIPMENT SCHEDULE FOR MOTOR FEEDER/ BRANCH CIRCUIT INFORMATION.
5.102	CONNECT AS REQUIRED TO COMBINATION SMOKE/FIRE DAMPER. REFER TO MECHANICAL DRAWINGS FOR EXACT LOCATIONS. CONTRACTOR TO PROVIDE CONTROL RELAY MODULE AT ASSOCIATED HVAC UNIT FOR IMMEDIATE UNIT SHUT DOWN UPON DAMPER CLOSURE PER CMC, SECTION 605.8.

MOTORIZED EQUIPMENT SCHEDULE

TAG	ITEM	DESCRIPTION	EQUIPMENT RATING VOLTS	PH.	MOTOR HP	MOTOR FLA	VFD FLA	MCA	MOCP	DISC. SW. SIZE STARTER SIZE	CIRCUIT DATA CONDUIT - WIRE	SPECIFIC NOTES
BS	C-1	BRANCH SELECTOR	208	1		0.3		0.4	15 A	30AS	3/4"C. - 2#12, 1#12 GRD.	A
EF	C-1	EXHAUST FAN	115	1		4.4		5.5	15 A	Motor Rated	3/4"C. - 2#12, 1#12 GRD.	A,C
EF	C-2	EXHAUST FAN	115	1		4.4		5.5	15 A	Motor Rated	3/4"C. - 2#12, 1#12 GRD.	A,C
ERV	C-1	ENERGY RECOVERY VENTILATOR	208	3		6.8		8.5	15 A	30AS	3/4"C. - 3#12, 1#12 GRD.	A
EUH	C-1	HEATER UNIT	208	1		12.7		15.9	20 A	30AS	3/4"C. - 2#12, 1#12 GRD.	A
FCU	C-1	FAN COIL UNIT	208	1		1.4		1.8	15 A	30AS	3/4"C. - 2#12, 1#12 GRD.	A
FCU	C-2	FAN COIL UNIT	208	1		2.2		2.8	15 A	30AS	3/4"C. - 2#12, 1#12 GRD.	A
FCU	C-3	FAN COIL UNIT	208	1		2.2		2.8	15 A	30AS	3/4"C. - 2#12, 1#12 GRD.	A
HP	C-1	HEAT PUMP	208	3		30.5		38.1	45 A	60AS	1"C. - 3#6, 1#8 GRD.	A

WALL TYPES LEGEND

SEE SHEET G121 FOR ASSEMBLY TYPES

EXTERIOR

	2 x 6 WOOD STUD WALL - NON RATED	0-W1-6 * ● #
	2 x 12 WOOD STUD WALL - NON RATED	0-W1-12 * ● #

INTERIOR

	2 x 4 WOOD STUD WALL - NON RATED	0-W2-4 * ● #
	2 x 6 WOOD STUD WALL - NON RATED	0-W2-6 * ● #
	2 x 8 WOOD STUD WALL - NON RATED	0-W2-8 * ● #
	2 x 12 WOOD STUD WALL - NON RATED	0-W2-12 * ● #
	2 x 4 WOOD STUD WALL - ACOUSTIC	0-W5-4 * ● #
	2 x 6 WOOD STUD WALL - ACOUSTIC	0-W5-6 * ● #
	2 X 4 WOOD STUD WALL - 1-HR FIRE PARTITION W/ PROTECTED OPENINGS	1-W3-4 * ● #
	2 X 6 WOOD STUD WALL - 1-HR FIRE PARTITION W/ PROTECTED OPENINGS	1-W3-6 * ● #

WALL TYPE NOTES

PARTITION SYMBOL

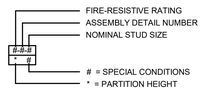

POWER PLAN GENERAL NOTES:

1. ALL RECEPTACLES ON COMMON WALLS SHALL BE SEPARATE BOXES AND OFFSET 24-INCHES MINIMUM.
2. ALL PENETRATIONS THROUGH FIRE RATED WALLS SHALL BE PROTECTED FROM THE SPREAD OF FIRE WITH AN APPROVED FIRESTOP SYSTEM EQUAL OR GREATER THAN THE FIRE RATING OF THE WALL.
3. ALL WALL-MOUNTED DEVICE HEIGHTS SHALL BE VERIFIED WITH THE ARCHITECT PRIOR TO ROUGH-IN.
4. ALL FURNITURE FEED LOCATIONS TO BE VERIFIED WITH ARCHITECT AND FURNITURE VENDOR PRIOR TO ROUGH-IN.
5. ALL FURNITURE WHIPS SHALL BE TRIMMED TO REDUCE EXCESS WHIP LENGTH.
6. WHEN EXPOSED CEILINGS OR OPEN GRID CONDITIONS OCCUR, THE CONTRACTOR WILL NEED TO PROVIDE THE FOLLOWING ITEMS:

   - ALL BRANCH CIRCUITS SHALL BE IN EMT.

   - ALL BRANCH CIRCUITS SHALL BE ROUTED NEATLY AND IN PARALLEL TO STRUCTURES OR DUCT WORK.

   - VISUALLY OBJECTIONABLE BRANCH CIRCUITS SHALL BE REROUTED AT THE REQUEST OF THE ARCHITECT AT NO ADDITIONAL COST.
7. EXPOSED CABLE/CONDUCTORS INSTALLED IN A PLENUM SPACE SHALL CONFORM TO NEC, OR CEC WHERE ADOPTED, ARTICLE 300.22(C).
8. PROVIDE G.F.C.I. TYPE RECEPTACLE(S) OR RECEPTACLE(S) PROTECTED BY A GFCI CIRCUIT BREAKER(S) WHEN LOCATED WITHIN 6 FEET OF ANY SINK OR THERAPEUTIC TUB, LAUNDRY AREA, SERVING ANY DRINKING FOUNTAIN OR VENDING MACHINE, WITHIN ANY KITCHEN SPACE AND/OR LOCATED OUTDOORS. WHERE RECEPTACLES ARE NOT READILY ACCESSIBLE, PROVIDE GFCI CIRCUIT BREAKER(S) TO PROTECT THE RESPECTIVE BRANCH CIRCUIT AND PROVIDE ADDITIONAL NEUTRAL CONDUCTORS IN THE BRANCH CIRCUITING AS REQUIRED TO ENSURE PROPER GFCI FUNCTION
9. PROVIDE OCCUPANCY SENSOR/LIGHTING CONTROL SYSTEM CONTROLLED RECEPTACLE RELAY(S) AS REQUIRED TO SWITCH CONTROLLED RECEPTACLES. CONNECT BRANCH CIRCUITRY AND CONTROL WIRING AS REQUIRED TO ALLOW OCCUPANCY SENSOR/LIGHTING CONTROL SYSTEM RELAY TO SWITCH STANDALONE AND/OR SYSTEMS FURNITURE CONTROLLED RECEPTACLES AS INDICATED ON PLANS. PROVIDE ADDITIONAL CONDUIT, WIRING AND PATHWAYS NECESSARY TO CONNECT BRANCH CIRCUITRY AND CONTROL WIRING TO REMOTE RELAYS TO INCLUDE RELAY(S) LOCATED ON ALTERNATE FLOORS, IN ELECTRICAL ROOMS, ETC.
10. UNLESS SPECIFICALLY SHOWN AS (E), (R), (ER), (D), EXISTING OR NON-BOLD, ALL ELECTRICAL DEVICES SHOWN ARE NEW.
11. PROVIDE REDUNDANT GROUND PATH IN ALL BRANCH CIRCUITS SERVING PATIENT CARE AREAS CONSISTING OF A SEPARATE, INSULATED EQUIPMENT GROUNDING CONDUCTOR PER NEC, OR CEC WHERE ADOPTED, ART 517.13.
12. CONTRACTOR SHALL PROVIDE CONDUIT AND WIRE FOR ALL DEVICES TO PANELBOARD(S) INDICATED ON PLANS FOR A COMPLETE AND OPERABLE SYSTEM.
13. CONTRACTOR SHALL PROVIDE MINIMUM 2#12, 1#12G IN ½" CONDUIT UNLESS OTHERWISE NOTED. REFERENCE WIRE SIZE TABLE CHART ABOVE. WHERE REQUIRED, CONDUIT AND WIRE SHALL BE UPSIZED TO MEET THE REQUIREMENT OF THE DEVICE BEING SERVED BY THE BRANCH CIRCUIT. WHERE CONDUIT AND WIRING IS INDICATED AT THE HOME RUN, WIRING AND CONDUIT SHALL CONTINUE AT THAT SIZE FOR THE ENTIRE LENGTH OF THE CIRCUIT.
14. CONTRACTOR SHALL FURNISH ADDITIONAL SWITCHLEGS OR HOT WIRES AS REQUIRED TO MEET THE CONTROL INTENT OF THE DOCUMENTS AND AS REQUIRED BY CODE (I.E. EMERGENCY LIGHTING AND SWITCHED RECEPTACLES).
15. MULTIPLE CIRCUITS MAY BE USED IN A SINGLE RACEWAY. NO MORE THAN (3) DEDICATED CIRCUITS OR (4) CURRENT CARRYING CONDUCTORS SHALL BE INSTALLED IN ANY RACEWAY UNLESS OTHERWISE NOTED. WHERE A COMMON GROUNDED CONDUCTOR IS USED FOR MULTIPLE INDIVIDUAL BRANCH CIRCUITS, PER SECTIONS CEC 200.4, 250.122, 310.15(B)(2), CONDUIT SIZE SHALL BE INCREASED AS REQUIRED FOR THE CONDUCTORS INCLUDING TEMPERATURE DERATING PER CEC TABLE C1.
16. FURNISH AND INSTALL JUNCTION BOXES AS REQUIRED TO MEET MAXIMUM BEND REQUIREMENTS FOR PULLING WIRES PER CEC 358.26. JUNCTION BOXES SHALL BE SIZED AS REQUIRED PER CEC 314.28 UNLESS OTHERWISE NOTED.

MOTORIZED EQUIPMENT SCHEDULE GENERAL NOTES:

1. ALL BRANCH CIRCUIT DATA IS BASED UPON METALLIC CONDUITS. IF THE CONTRACTOR ELECTS TO USE NONMETALLIC CONDUITS, AN EQUIPMENT GROUNDING CONDUCTOR SHALL BE INSTALLED PER NEC, OR CEC WHERE ADOPTED, TABLE 250.122 AND THE CONDUIT SIZE SHALL BE INCREASED ACCORDINGLY.
2. ELECTRICAL CONTRACTOR SHALL REFER TO ALL DOCUMENTS RELATED TO THE EQUIPMENT (I.E. SHOP DRAWINGS, CONSTRUCTION DOCUMENTS, ETC.) IN REGARDS TO ELECTRICAL CHARACTERISTICS OF ALL EQUIPMENT LISTED IN THE SCHEDULE. ANY MODIFICATION AND/OR ADDITIONAL WORK NECESSARY SHALL BE INCLUDED IN THE BASE BID.
3. ELECTRICAL CONTRACTOR SHALL CHECK THE ROTATION OF ALL THREE PHASE MOTORS AND CORRECT THE ROTATION IF REVERSED.
4. ELECTRICAL CONTRACTOR SHALL PROVIDE FUSES SIZED PER THE EQUIPMENT NAMEPLATE INFORMATION.
5. DISCONNECT SWITCHES SHALL BE HEAVY DUTY TYPE, EXTERNALLY OPERATED, QUICK MAKE QUICK BREAK AND SHALL BE FUSIBLE OR NON FUSIBLE AS INDICATED. A MAXIMUM VOLTAGE, CURRENT AND HORSEPOWER SHALL BE CLEARLY MARKED ON SWITCH ENCLOSURE. SWITCHES HAVING DUAL RATINGS (HIGHER RATINGS WHEN USED WITH DUAL ELEMENT FUSES) SHALL HAVE RATINGS INDICATED ON METAL PLATES RIVETED OR OTHERWISE PERMANENTLY ATTACHED TO THE ENCLOSURE. WHEN INDICATED, TOGGLE SWITCHES SHALL BE MOTOR RATED FOR THE APPLICATION.
6. STARTERS SHALL BE FULL VOLTAGE, REDUCED VOLTAGE OR COMBINATION DISCONNECT AND STARTER, WITH CONTROL VOLTAGE AS REQUIRED, AS INDICATED ON THE DOCUMENTS RELATED TO THE EQUIPMENT, SUCH AS SHOP DRAWINGS, CONSTRUCTION DOCUMENTS, ETC. STARTERS SHALL INCLUDE MOTOR OVERLOAD PROTECTION, PHASE LOSS AND PHASE UNBALANCE PROTECTION AS REQUIRED.
7. ALL TERMINATIONS AND ENCLOSURES SHALL BE RATED FOR USE WITH 75 DEGREE C CONDUCTORS.
8. COMPLETE INSTALLATION SHALL CONFORM TO THE REQUIREMENTS OF NEC (OR CEC WHERE ADOPTED) ARTICLES 430 AND 440.
9. CONTRACTOR TO COORDINATE WITH ALL OTHER PROJECT TRADES AND WITH OWNER/ TENANT FOR TO OBTAIN RESPECTIVE EQUIPMENT SCCR AND PROVIDE APPROPRIATE PROTECTIVE DEVICES TO LIMIT AVAILABLE FAULT CURRENT TO LESS THAN THE EQUIPMENT NAMEPLATE SCCR PER NEC (OR CEC WHERE ADOPTED) 110.10. SEE POWER SYSTEM STUDY SPECIFICATIONS FOR ADDITIONAL REQUIREMENTS.
10. UNLESS OTHERWISE NOTED, MOCP VALUES FOR VFD-EQUIPPED DEVICE ARE SIZED PER NEC (OR CEC WHERE ADOPTED) 430.130(A).1. CONTRACTOR SHALL COORDINATE WITH ALL OTHER PROJECT TRADES AND WITH OWNER/ TENANT (IF PROVIDING EQUIPMENT ON PROJECT) TO OBTAIN NAMEPLATE VFD-EQUIPPED DEVICE MOCP VALUE FROM MANUFACTURER INSTALLATION INSTRUCTIONS AND PROVIDE APPROPRIATE PROTECTIVE DEVICES TO COMPLY WITH NEC (OR CEC WHERE ADOPTED) 430.130(A).2.

MOTORIZED EQUIPMENT SCHEDULE SPECIFIC NOTES:

A. FUSED AS RECOMMENDED BY MANUFACTURER.

B. MAGNETIC MOTOR STARTER WITH CONTROL TRANSFORMER, AUXILIARY CONTACTS, INDICATOR LIGHT AND H.O.A. SWITCH. VERIFY CONTROL TRANSFORMER VOLTAGE WITH M.C. PRIOR TO ORDERING MATERIAL.

C. ROUTE THROUGH LINE VOLTAGE CONTROL. SEE MECHANICAL AND/OR PLUMBING PLANS FOR ADDITIONAL REQUIREMENTS.

D. VERIFY LOCATION WITH PLUMBING PLANS PRIOR TO ROUGH-IN. CONNECT TO AQUASTAT AND TIME CLOCK AS REQUIRED.

E. REMOTE VFD. PROVIDE EARLY BREAK CONTACTS ON ANY DISCONNECT SWITCHES REQUIRED BY CODE OR SHOWN ON PLANS THAT ARE DOWNSTREAM OF THE REMOTE VFD. PROVIDE CONDUIT AND CONDUCTORS AS REQUIRED TO INTERCONNECT THE CONTACT WITH VFD "ENABLE" TERMINALS. REFER TO MECHANICAL AND/OR PLUMBING PLANS FOR LOCATION. PROVIDE FEEDER(S) TO CONNECT REMOTE VFD AND MOTOR(S) AS REQUIRED.

F. INTEGRAL VFD PROVIDED WITH EQUIPMENT. REFER TO MECHANICAL AND/OR PLUMBING PLANS FOR LOCATION. CONNECT TO VFD AS REQUIRED.

G. INTEGRAL DISCONNECT PROVIDED WITH EQUIPMENT. REFER TO MECHANICAL AND/OR PLUMBING PLANS FOR LOCATION. CONNECT TO INTEGRAL DISCONNECT AS REQUIRED.

H. INTEGRAL DISCONNECT PROVIDED WITH VFD. REFER TO MECHANICAL AND/OR PLUMBING PLANS FOR LOCATION. CONNECT TO INTEGRAL DISCONNECT AS REQUIRED.

J. INDOOR UNIT POWERED FROM RESPECTIVE OUTDOOR UNIT. PROVIDE POWER AND CONTROL WIRING AS REQUIRED.

K. ROUTE THROUGH LINE VOLTAGE CONTROL FOR KITCHEN HOOD FIRE SUPPRESSION SYSTEM. SEE MECHANICAL, FIRE ALARM AND FOOD SERVICE PLANS FOR ADDITIONAL REQUIREMENTS.

IDENTIFICATION STAMP
DIV. OF THE STATE ARCHITECT
APP: 02-118630 INC:
REVIEWED FOR
SS ☐ FLS ☐ ACS ☑
DATE: 04/13/2021

OFFICE OF THE STATE FIRE MARSHAL
APPROVED FIRE AND PANIC ONLY
Approval of this plan does not authorize or approve any omission or deviation from applicable regulations. Final approval is subject to field inspection. One set of approved plans shall be available on the project site at all times.
PERMIT NO.: 28-N 2332-CP
REVIEWED BY: LEO CATAYLO, OSFM
DATE: 4 / /2021

DGS GENERAL SERVICES
Department of General Services
State of California
Real Estate Services Division
Project Management & Development Branch
707 Third Street, Suite 4-105
West Sacramento, California 95605

NICHOLS MELBURG & ROSSETTO ARCHITECTS + ENGINEERS
300 Knollcrest Drive
Redding, CA. 96002
(530) 222-3300 (530) 222-3538 FAX
http://www.nmrdesign.com

Copyright © 2019
All ideas, designs, arrangements and plans indicated or represented by this drawing are owned by, and the property of, NICHOLS, MELBURG and ROSSETTO and were created, evolved and developed for use on, and in connection with, the specified project. None of such ideas, designs, arrangements or plans shall be used by, or disclosed to any person, firm or corporation for any purpose whatsoever without the written permission of NICHOLS, MELBURG and ROSSETTO.

LICENSE STAMPS

REGISTERED PROFESSIONAL ENGINEER RAYMOND W. SWAYZE No. E15610 12/31/2021 ELECTRICAL STATE OF CALIFORNIA
Date Signed: 3/25/2021

CONSULTANT
tk1sc COLLABORATIVE
11870 Pierce Street, Suite 160
Riverside, California 92505
951.299.4160 www.tk1sc.com
Project Leader - Jerry Leonhardt
Electrical Lead - Reid Cordry
tk1sc Job #:2019-0228A

DRAWING STATUS
CONSTRUCTION DOCUMENTS

ISSUE

No.	Date	Description
1	10/20/2020	INITIAL PLAN REVIEW
2	01/22/2021	AGENCY RESUBMITTAL
3	03/22/2021	AGENCY RESUBMITTAL

If drawing is not 30" x 42" it is a reduced print

PROJECT
RESIDENTIAL CENTER, UKIAH: REPLACEMENT OF EXISTING RESIDENTIAL CENTER
440 EAST HILL ROAD
WILLITS, CALIFORNIA 95490
MENDOCINO COUNTY
CALIFORNIA CONSERVATION CORP

Supervisor	Designed	Drawn
		Author

DSA Application No.
XX-XXXXXX

SHEET TITLE
COMET MECHANICAL POWER PLAN

DGS Project Number: XXXXX
NMR Project Number: 18-6456

Reference North
Sheet Scale: As indicated
Sheet Number: E301C

ISSUE DATE
July 9, 2021

Plot Date: 3/23/2021 3:47:25 PM
File Name: BIM 360://CCC Willits Residential Center/E_CCC Willits_COMET_2019-0228A.rvt

PANEL: CA

MOUNTING: Surface
NEMA 3R: No
FEED THRU: No
M.L.O.: No

DOUBLE-LUGS: No
200% NEUTRAL: No
I/G BUS: No

VOLTS: 120/208 Wye
PHASE: 3
WIRE: 4
AIC: 10,000

SUPPLY FROM: DBH
LOCATION: ELEC. C111
MCB: 225A-3P
BUS: 225A

NOTE	DESCRIPTION	BKR	POLE	TYPE	CIRC	A	B	C	CIRC	TYPE	POLE	BKR	DESCRIPTION	NOTE
	R MEN'S DORM C101	20 A	1	R	1	720 360			2	R	1	20 A	R RESTROOM C102	
	R MEN'S DORM C101	20 A	1	R	3		540 360		4	R	1	20 A	R RESTROOM C111	
	R WOMEN'S DORM C116	20 A	1	R	5			360 360	6	R	1	20 A	R F.S. / MECH. C110	
	R WOMEN'S DORM C116	20 A	1	R	7	360 180			8	R	1	20 A	R EXTERIOR	
	R WOMEN'S DORM C116	20 A	1	R	9		180 720		10	R	1	20 A	R BED #4	
	R EXTERIOR	20 A	1	R	11			180 720	12	R	1	20 A	R BED #4	
	R BED #1	20 A	1	R	13	720 720			14	R	1	20 A	R BED #5	
	R BED #1	20 A	1	R	15		720 720		16	R	1	20 A	R BED #5	
	R BED #2	20 A	1	R	17			720 2300	18	P	1	20 A	HAND DRYER RESTROOM C102	
	R BED #2	20 A	1	R	19	720 2300			20	P	1	20 A	HAND DRYER RESTROOM C102	
	R BED #3	20 A	1	R	21		720 2300		22	P	1	20 A	HAND DRYER RESTROOM C111	
	R C107, C109 CIRCULATION PUMPS	20 A	1	R	23			360 2300	24	P	1	20 A	HAND DRYER RESTROOM C111	
	R ELEC. C111	20 A	1	R	25	1000 0			26	--	1	20 A	SPARE	
	SPARE	20 A	1	--	27		0 0		28	--	1	20 A	SPARE	
	SPARE	20 A	1	--	29			0 0	30	--	1	20 A	SPARE	
					31				32					
					33				34					
					35				36					
	P JAN. C109 EWH C-1	30 A	2	P	37	2500 1004			38	L	1	20 A	L Room C108, C107, C109, C110, C112, C113, C114...	
--	--	--	--	--	39		2500 702		40	L	1	20 A	L Room C101, C116	
	P JAN. C107 EWH C-2	30 A	2	P	41			2500 140	42	L	1	20 A	L EXTERIOR	
--	--	--	--	--	43	2500 1325			44	M	2		ELH C-1	
	EWH C-1, C-2 BOOSTER FANS	20 A	1	P	45		4600 1325		46	--	--	--	--	--
	FCU C-1, C-2, C-3	20 A	2	M	47			605 817	48	M	3	15 A	ERV C-1	
--	--	--	--	--	49	605 817			50	--	--	--	--	--
	EF C-1, C-2	20 A	1	M	51		1020 817		52	--	--	--	--	--
	BS C-1	15 A	2	M	53			30 3660	54	M	3	45 A	HP C-1	
--	--	--	--	--	55	30 3660			56	--	--	--	--	--
	P CEILING FANS	20 A	1	P	57		90 3660		58	--	--	--	--	--
	P CEILING FANS	20 A	1	P	59			60 500	60	M	1	20 A	FCU LIGHTS	
	Room C101, C119, C114	20 A	1	L; R	61	579 0			62	--	1	20 A	SPARE	
--	SPACE	--	--	--	63		0 0		64	--	--	--	SPACE	--
--	SPACE	--	--	--	65			0 0	66	--	--	--	SPACE	--
		PHASE TOTALS:				20099.67 VA	20973.67 VA	15611.67 VA						
COMMENTS:						173.3 A	180.5 A	130.1 A						

LOAD TYPE KEY	LOAD CLASSIFICATION	CONNECTED LOAD	AVG. DEMAND...	ESTIMATED DEMAND	PANEL TOTALS	AMPS	KVA
H = HVAC EQUIP	P	23.95 kVA	100.00%	23.95 kVA			
K = KITCHEN	R	11.98 kVA	91.74%	10.99 kVA	TOTAL CONNECTED LOAD:	157.3 A	56.69 kVA
L = LIGHTING	L	1.89 kVA	125.00%	2.36 kVA	TOTAL DEMAND LOAD:	163.5 A	58.91 kVA
M = MOTOR	M	18.87 kVA	114.55%	21.62 kVA	HIGH PHASE:	181 A	20.97 kVA
P = POWER							
R = RECEPTACLE							
W = WATER HEATER							

PANEL SCHEDULE GENERAL NOTES:

1. WHERE PANEL IS INDICATED TO INCLUDE FEED THRU LUGS, PROVIDE FEED THROUGH LUGS AT THE OPPOSITE END OF THE PANELBOARD FROM THE PANELBOARD MAIN LUGS.
2. WHERE PANEL IS INDICATED TO INCLUDE DOUBLE LUGS, PROVIDE A DOUBLE LUG KIT AT THE SAME END OF THE PANELBOARD AS THE PANELBOARD MAIN LUGS.
3. WHERE PANEL IS INDICATED TO INCLUDE 200% NEUTRAL, PROVIDE PANELBOARDS UL LISTED AS HAVING NEUTRAL BUSSES RATED TO CARRY 200 PERCENT OF THE CURRENT CARRYING CAPACITY OF THE PHASE BUSSING. OTHERWISE, NEUTRAL BUSSING TO BE FULL SIZE AND RECTANGULAR.
4. WHERE PANEL IS INDICATED TO INCLUDE AN I/G BUS, PROVIDE PANELBOARDS WITH AN ISOLATED GROUND BUS, DRILLED AND TAPPED FOR NUMBER OF ISOLATED GROUND CONDUCTORS SHOWN, AS WELL AS FOR ALL SPARES AND SPACES SHOWN ON THE PANELBOARD.
5. WHERE PANEL CIRCUIT BREAKER RATING IS SHOWN AS SERIES RATED, PROVIDE CIRCUIT BREAKERS IN PANELBOARD WHICH ARE SERIES RATED WITH THE UPSTREAM SYSTEM FOR THE AVAILABLE FAULT CURRENT. THE PANELBOARD SHALL BE MARKED WITH THE SERIES CONNECTED RATINGS, AS WELL AS ALL MARKING AS REQUIRED BY THE NEC, OR CEC WHERE ADOPTED, 240-83(C).
6. WHERE PANEL IS INDICATED AS RECESSED OR FLUSH MOUNTED, PROVIDE SPARE CONDUITS STUBBED UP INTO THE ACCESSIBLE CEILING SPACE. PROVIDE ONE (1) 3/4" CONDUIT ONLY FOR EACH THREE (3) SPARES OR SPACES, MINIMUM OF TWO (2). EACH CONDUIT SHALL BE TAGGED, CAPPED AND MARKED FOR FUTURE USE.
7. ALL BUSSING SHALL BE TIN PLATED ALUMINUM.
8. ALL CIRCUIT BREAKERS USED AS SWITCHES SHALL BE UL LISTED AND LABELED "SWD" FOR SWITCHING DUTY.
9. PROVIDE BREAKER INTERLOCK WITH ADJACENT BREAKER(S) FOR ANY MULTI-WIRE BRANCH CIRCUIT. BREAKER INTERLOCK GROUPING SHALL BE BY BRANCH CIRCUIT GROUP (i.e. MULTIPLE CIRCUITS SHARING A COMMON NEUTRAL (NEC, OR CEC WHERE ADOPTED, 210.4 (B).) COMMON YOKE (NEC, OR CEC WHERE ADOPTED, 210.7(B)).) OR FURNITURE SYSTEM NEC OR CEC WHERE ADOPTED, 605.6 AND 605.7). WHERE AN EXISTING PANEL IS BEING ALTERED OR MODIFIED IN ANY WAY, CONTRACTOR SHALL INCLUDE ALL COSTS IN BASE BID TO ADD BREAKER INTERLOCKS TO EXISTING MULTI-WIRE BRANCH CIRCUITS BASED ON CONTRACTOR'S INVESTIGATION OF EXISTING CONDITIONS.
10. PROVIDE BREAKER LOCK OFF DEVICE ON ANY CIRCUIT BREAKER FEEDING A TRANSFORMER AS REQUIRED, PER NEC, OR CEC WHERE ADOPTED, 450.14. WHERE AN EXISTING PANEL IS BEING ALTERED OR MODIFIED IN ANY WAY, CONTRACTOR SHALL INCLUDE ALL COSTS IN BASE BID TO ADD BREAKER LOCK-OFF DEVICES TO EXISTING TRANSFORMER CIRCUIT BREAKERS BASED ON CONTRACTOR'S INVESTIGATION OF EXISTING CONDITIONS.
11. ALL CIRCUIT BREAKERS SHALL BE BOLT-ON TYPE AND SHALL BE SUITABLE FOR 75 DEGREE AMPACITY CONDUCTORS.
12. PANELS SHALL BE OF THE DEAD FRONT SAFETY TYPE. PANELS SHALL BE MINIMUM 20" WIDE AND 5-3/4" DEEP UNLESS OTHERWISE NOTED ON PLAN.
13. COORDINATE WITH APPLICABLE TRADE TO INSURE RECESSED MOUNTED PANELBOARDS WILL SEAT FLUSH IN THE WALLS PROVIDED. PANEL TRIMS SHALL HAVE CONCEALED DOORS AND FASTENERS WITH FLUSH TYPE COMBINATION LOCK AND CATCH, TWO MILLED TYPE KEYS SUPPLIED WITH EACH PANEL. ALL LOCKS SHALL BE KEYED ALIKE AND EACH DOOR SHALL HAVE A PLASTIC COVERED DIRECTORY FRAME WITH A TYPED IDENTIFICATION CARD OF ALL CIRCUIT AND PANEL NUMBERS FOR BRANCH CIRCUIT PANELBOARDS.
14. UPON PROJECT COMPLETION, CONTRACTOR SHALL INSTALL TYPED AS-BUILT PANEL DIRECTORIES IN EACH PANEL WITHIN THE MFGR-PROVIDED DIRECTORY HOLDER. THE DIRECTORY SHALL CLEARLY IDENTIFY EACH CIRCUIT TO ITS CLEAR, EVIDENT, AND SPECIFIC PURPOSE OR USE. EACH CIRCUIT IDENTITY SHALL INCLUDE SUFFICIENT DETAIL TO ALLOW EACH CIRCUIT TO BE DISTINGUISHED FROM ALL OTHERS PER NEC, OR CEC WHERE ADOPTED, ART 408.1 AND 408.4 . HANDWRITTEN DIRECTORIES ARE UNACCEPTABLE. COPIES OF AS-BUILT PANEL SCHEDULES SHALL BE PLACED IN PANEL DIRECTORIES. E.C. TO INCLUDE ALL COSTS REQUIRED FOR LARGER-THAN-STANDARD CUSTOM PANEL DIRECTORY HOLDERS TO ACCOMMODATE COPIES OF AS-BUILT PANEL SCHEDULES.
15. PANELBOARDS SHALL BE MANUFACTURED BY G.E., CUTLER-HAMMER, SIEMENS, OR SQUARE "D". FUSED PANEL BOARDS SHALL BE BY COOPER BUSSMANN.
16. PROVIDE SHOP DRAWING SUBMITTAL PER THE ELECTRICAL SPECIFICATION SUBMITTAL REQUIREMENTS FOR EACH PANEL DEPICTING CONFORMANCE WITH THE ABOVE NOTES AND SCHEDULES.

SPECIFIC PANEL SCHEDULE NOTES:

"A" PROVIDE LOCK-ON DEVICE.

"B" PROVIDE LOCK-OFF DEVICE.

"C" PROVIDE SHUNT TRIP DEVICE.

"D" PROVIDE GFCI TYPE DEVICE.

"E" PROVIDE A RED CIRCUIT BREAKER.

"F" PROVIDE A NEW BREAKER TO MATCH THE EXISTING IN PANEL.

"G" EXISTING BREAKER WITH NEW LOAD.

"H" PROVIDE RELAY AS REQUIRED FOR CONTROL OF EXTERIOR LIGHTING BY PHOTOCELL ON / TIMECLOCK OFF. MOUNT RELAY IN SEPARATE BARRIERED COMPARTMENT OF PANELBOARD.

PANEL SCHEDULE INDEX

XXXX	XXXX	CA
XXXX	XXXX	XXXX
XXXX	XXXX	XXXX

Plot Date: 3/22/2021 3:47:28 PM
File Name: BIM 360:/CCC Willits Residential Center/E_CCC Willits_COMET_2019-0228A.rvt

IDENTIFICATION STAMP
DIV. OF THE STATE ARCHITECT
APP: 02-118630 INC:
REVIEWED FOR
SS ☐ FLS ☐ ACS ☑
DATE: 04/13/2021

OFFICE OF THE STATE FIRE MARSHAL
APPROVED FIRE AND PANIC ONLY
Approval of this plan does not authorize or approve any omission or deviation from applicable regulations. Final approval is subject to field inspection. One set of approved plans shall be available on the project site at all times.
PERMIT NO.: 20-N-2332-CP
REVIEWED BY: LEO CATALLO, OSFM
DATE: 4/ /2021

GENERAL SERVICES
Department of General Services
State of California
Real Estate Services Division
Project Management & Development Branch
707 Third Street, Suite 4-105
West Sacramento, California 95605

NICHOLS MELBURG & ROSSETTO
ARCHITECTS + ENGINEERS
300 Knollcrest Drive
Redding, CA. 96002
(530) 222-3300 (530) 222-3538 FAX
http://www.nmrdesign.com

Copyright © 2019
All ideas, designs, arrangements and plans indicated or represented by this drawing are owned by, and the property of, NICHOLS, MELBURG and ROSSETTO and were created, evolved and developed for use on, and in connection with, the specified project. None of such ideas, designs, arrangements or plans shall be used by, or disclosed to any person, firm or corporation for any purpose whatsoever without the written permission of NICHOLS, MELBURG and ROSSETTO.

LICENSE STAMPS

REGISTERED PROFESSIONAL ENGINEER
RAYMOND W. SWEETEN
No. E15610
12/31/2021
ELECTRICAL
STATE OF CALIFORNIA
Date Signed
3/25/2021

CONSULTANT

tk1sc COLLABORATIVE
11870 Pierce Street, Suite 160
Riverside, California 92505
951.299.4160 www.tk1sc.com
Project Leader - Jerry Leonhardt
Electrical Lead - Reid Cordry
tk1sc Job #:2019-0228A

DRAWING STATUS
CONSTRUCTION DOCUMENTS

ISSUE

No.	Date	Description
1	10/20/2020	INITIAL PLAN REVIEW
2	01/22/2021	AGENCY RESUBMITTAL
3	03/22/2021	AGENCY RESUBMITTAL

If drawing is not 30" x 42" it is a reduced print

PROJECT
RESIDENTIAL CENTER, UKIAH: REPLACEMENT OF EXISTING RESIDENTIAL CENTER
440 EAST HILL ROAD
WILLITS, CALIFORNIA 95490
MENDOCINO COUNTY
CALIFORNIA CONSERVATION CORP

Supervisor	Designed	Drawn
		Author

DSA Application No.
XX-XXXXXX

SHEET TITLE
COMET PANEL SCHEDULES

DGS Project Number	NMR Project Number
XXXXX	18-6456

Reference North: NORTH
Sheet Scale: 12" = 1'-0"
Sheet Number: E407C

ISSUE DATE
July 9, 2021

STATE OF CALIFORNIA
Indoor Lighting
NRCC-LTI-E
CALIFORNIA ENERGY COMMISSION

CERTIFICATE OF COMPLIANCE		NRCC-LTI-E
Project Name:	Replacement of Existing Residential Center	**Report Page:** (Page 6 of 7)
Project Address:	440 East Hill Road	**Date Prepared:** 10/20/2020

T. DECLARATION OF REQUIRED CERTIFICATES OF INSTALLATION

Selections have been made based on information provided in this document. If any selection have been changed by permit applicant, an explanation should be included in Table E. Additional Remarks. These documents must be provided to the building inspector during construction and can be found online at https://www.energy.ca.gov/title24/2019standards/2019_compliance_documents/Nonresidential_Documents/NRCI/

Yes	No	Form/Title	Field Inspector Pass	Field Inspector Fail
●	○	NRCI-LTI-01-E - Must be submitted for all buildings	☐	☐
○	●	NRCI-LTI-02-E - Must be submitted for a lighting control system, or for an Energy Management Control System (EMCS), to be recognized for compliance.	☐	☐
○	●	NRCI-LTI-04-E - Must be submitted for two interlocked systems serving an auditorium, a convention center, a conference room, a multipurpose room or a theater to be recognized for compliance.	☐	☐
○	●	NRCI-LTI-05-E- Must be submitted for a Power Adjustment Factor (PAF) to be recognized for compliance.	☐	☐
○	●	NRCI-LTI-06-E- Must be submitted for additional wattage installed in a video conferencing studio to be recognized for compliance.	☐	☐

U. DECLARATION OF REQUIRED CERTIFICATES OF ACCEPTANCE

Selections have been made based on information provided in this document. If any selection have been changed by the permit applicant, an explanation should be included in Table E. Additional Remarks. These documents must be provided to the building inspector during construction and any with "-A" in the form name must be completed through an Acceptance Test Technician Certification Provider (ATTCP). For more information visit: http://www.energy.ca.gov/title24/attcp/providers.html

Yes	No	Form/Title	Field Inspector Pass	Field Inspector Fail
●	○	NRCA-LTI-02-A - Must be submitted for occupancy sensors and automatic time switch controls.	☐	☐
○	●	NRCA-LTI-03-A - Must be submitted for automatic daylight controls.	☐	☐
●	○	NRCA-LTI-04-A - Must be submitted for demand responsive lighting controls.	☐	☐
○	●	NRCA-LTI-05-A - Must be submitted for institutional tuning power adjustment factor (PAF)	☐	☐

Registration Number:
CA Building Energy Efficiency Standards - 2019 Nonresidential Compliance
Registration Date/Time:
Report Version: 2019.0.001
Schema Version: rev 20190401
Registration Provider: EnergySoft
Report Generated: 2020-10-20 09:10:03

STATE OF CALIFORNIA
Indoor Lighting
NRCC-LTI-E
CALIFORNIA ENERGY COMMISSION

CERTIFICATE OF COMPLIANCE		NRCC-LTI-E
Project Name:	Replacement of Existing Residential Center	**Report Page:** (Page 3 of 7)
Project Address:	440 East Hill Road	**Date Prepared:** 10/20/2020

F. INDOOR LIGHTING FIXTURE SCHEDULE

25	25 - Recessed LED Downlight	No	No	14.9	JA8 Lamp	6	No	89.4	☐	☐
3	3 - LED Striplight 4'	No	No	16	JA8 Lamp	4	No	64	☐	☐
7	7 - LED Surface - Shower	No	No	12	JA8 Lamp	16	No	192	☐	☐
9	9 - Recessed LED Downlight	No	No	10.9	JA8 Lamp	31	No	337.9	☐	☐
							Total Designed Watts: CONDITIONED SPACES		1,353	

[1]*FOOTNOTE: Design Watts for small aperture and color changing luminaires which qualify per §140.6(a)4iB is adjusted to be 75% of their rated wattage. Table F automatically makes this adjustment, the permit applicant should enter full rated wattage in column 05.*

G. MODULAR LIGHTING SYSTEMS
This section does not apply to this project.

H. INDOOR LIGHTING CONTROLS (Not including PAFs)
*This table includes lighting controls for conditioned and unconditioned spaces. When an control having a * is shown, the notes section of this table provides more detail on how compliance is achieved. The lighting controls section of the Compliance Summary Table on the first page will show "DOES NOT COMPLY" if the notes are left blank.*

Building Level Controls

01	02	03 Field Inspector Pass	03 Field Inspector Fail
Mandatory Demand Response §110.12(c)	Shut-off controls §130.1(c)	☐	☐
Required 10,000 SF	Whole Building Auto Time Switch		

Area Level Controls

04	05	06	07	08	09	10	11	12 Field Inspector Pass	12 Field Inspector Fail
Area Description	Complete Building or Area Category Primary Function Area	Area Controls §130.1(a)	Multi-Level Controls §130.1(b)	Shut-Off Controls §130.1(c)	Primary/Sky lit Daylighting §130.1(d)	Secondary Daylighting §140.6(d)	Interlocked Systems §140.6(a)1	☐	☐
Interior	All Other Space Types	Manual ON/OFF	Dimmer	Occupancy Sensor	N/A	N/A	No		

Registration Number:
CA Building Energy Efficiency Standards - 2019 Nonresidential Compliance
Registration Date/Time:
Report Version: 2019.0.001
Schema Version: rev 20190401
Registration Provider: EnergySoft
Report Generated: 2020-10-20 09:10:03

STATE OF CALIFORNIA
Indoor Lighting
NRCC-LTI-E
CALIFORNIA ENERGY COMMISSION

CERTIFICATE OF COMPLIANCE		NRCC-LTI-E
Project Name:	Replacement of Existing Residential Center	**Report Page:** (Page 1 of 7)
Project Address:	440 East Hill Road	**Date Prepared:** 10/20/2020

This document is used to demonstrate compliance with requirements in §110.9, §110.12(c), §130.0, §130.1, §140.6 and §141.0(b)2 for indoor lighting scopes using the prescriptive path.

A. GENERAL INFORMATION

01	Project Location (city)	Willits	04	Total Conditioned Floor Area (ft²)	2,897
02	Climate Zone	2	05	Total Unconditioned Floor Area (ft²)	0
03	Occupancy Types Within Project (select all that apply):		06	# of Stories (Habitable Above Grade)	1

☐ Office ☐ Retail ☐ Warehouse ☐ Hotel/Motel ☐ School ☒ Support Areas
☐ Parking Garage ☐ High-Rise Residential ☐ Relocatable ☐ Healthcare ☒ Other (Write in) See Table I

B. PROJECT SCOPE
This table includes any lighting systems that are within the scope of the permit application and are demonstrating compliance using the prescriptive path outlined in §140.6 or §141.0(b)2 for alterations.

Scope of Work	01 Conditioned Spaces	02	03	04 Unconditioned Spaces	05
My Project Consists of (check all that apply):		Calculation Method	Area (ft²)	Calculation Method	Area (ft²)
☒ New Lighting System		Area Category Method	2897	Area Category Method	0
☐ New Lighting System - Parking Garage					
☐ Altered Lighting System					
Total Area of Work (ft²)		2897		0	

Registration Number:
CA Building Energy Efficiency Standards - 2019 Nonresidential Compliance
Registration Date/Time:
Report Version: 2019.0.001
Schema Version: rev 20190401
Registration Provider: EnergySoft
Report Generated: 2020-10-20 09:10:03

STATE OF CALIFORNIA
Indoor Lighting
NRCC-LTI-E
CALIFORNIA ENERGY COMMISSION

CERTIFICATE OF COMPLIANCE		NRCC-LTI-E
Project Name:	Replacement of Existing Residential Center	**Report Page:** (Page 7 of 7)
Project Address:	440 East Hill Road	**Date Prepared:** 10/20/2020

DOCUMENTATION AUTHOR'S DECLARATION STATEMENT

Documentation Author Name: Ray Swartz	Documentation Author Signature:
Company: tk1sc	Signature Date: 2020-10-20 2020-10-20
Address: 11870 Pierce Street, Suite 160	CEA/ HERS Certification Identification (if applicable):
City/State/Zip: Riverside CA 92505	Phone: 951-299-4160

RESPONSIBLE PERSON'S DECLARATION STATEMENT
I certify the following under penalty of perjury, under the laws of the State of California:
1. The information provided on this Certificate of Compliance is true and correct.
2. I am eligible under Division 3 of the Business and Professions Code to accept responsibility for the building design or system design identified on this Certificate of Compliance (responsible designer)
3. The energy features and performance specifications, materials, components, and manufactured devices for the building design or system design identified on this Certificate of Compliance conform to the requirements of Title 24, Part 1 and Part 6 of the California Code of Regulations.
4. The building design features or system design features identified on this Certificate of Compliance are consistent with the information provided on other applicable compliance documents, worksheets, calculations, plans and specifications submitted to the enforcement agency for approval with this building permit application.
5. I will ensure that a completed signed copy of this Certificate of Compliance shall be made available with the building permit(s) issued for the building, and made available to the enforcement agency for all applicable inspections. I understand that a completed signed copy of this Certificate of Compliance is required to be included with the documentation the builder provides to the building owner at occupancy.

Responsible Designer Name: Ray Swartz	Responsible Designer Signature:
Company: tk1sc	Date Signed: 2020-10-20
Address: 11870 Pierce Street, Suite 160	License: E15610
City/State/Zip: Riverside CA 92505	Phone: 951-299-4160

Registration Number:
CA Building Energy Efficiency Standards - 2019 Nonresidential Compliance
Registration Date/Time:
Report Version: 2019.0.001
Schema Version: rev 20190401
Registration Provider: EnergySoft
Report Generated: 2020-10-20 09:10:03

STATE OF CALIFORNIA
Indoor Lighting
NRCC-LTI-E
CALIFORNIA ENERGY COMMISSION

CERTIFICATE OF COMPLIANCE		NRCC-LTI-E
Project Name:	Replacement of Existing Residential Center	**Report Page:** (Page 4 of 7)
Project Address:	440 East Hill Road	**Date Prepared:** 10/20/2020

H. INDOOR LIGHTING CONTROLS (Not including PAFs)

*NOTES: Controls with a * require a note in the space below explaining how compliance is achieved. *EX: Conference 1: Primary/Skylight Daylighting: Exempt because less than 120 watts of general lighting; EXCEPTION 1 to §130.1(d)2*	13 Plan Sheet Showing Daylit Zones:

I. LIGHTING POWER ALLOWANCE: COMPLETE BUILDING OR AREA CATEGORY METHODS
Each area complying using the Complete Building or Area Category Methods per §140.6(b) are included in this table. Column 06 indicates if additional lighting power allowances per §140.6(c) or adjustments per §140.6(a) are being used .

Conditioned Spaces

01 Area Description	02 Complete Building or Area Category Primary Function Area	03 Allowed Density (W/ft²)	04 Area (ft²)	05 Allowed Wattage (Watts)	06 Additional Allowance / Adjustment: Area Category	06 Additional Allowance / Adjustment: PAF
Restroom	Restrooms	0.65	987	641.55	No	No
Elec/Mech/Riser	Electrical Mechancial Telephone Room	0.4	120	48	No	No
Storage/Other	All Other Space Types	0.4	120	48	No	No
Dorms / Bedrooms	All Other Space Types	0.4	1,670	668	No	No
		TOTALS:	2,897	1,405.55	See Tables J, or P for detail	

J. ADDITIONAL ALLOWANCE: AREA CATEGORY METHOD QUALIFYING LIGHTING SYSTEM
This section does not apply to this project.

K. TAILORED METHOD GENERAL LIGHTING POWER ALLOWANCE
This section does not apply to this project.

L. ADDITIONAL LIGHTING ALLOWANCE: TAILORED WALL DISPLAY
This section does not apply to this project.

M. ADDITIONAL LIGHTING ALLOWANCE: TAILORED FLOOR AND TASK LIGHTING
This section does not apply to this project.

Registration Number:
CA Building Energy Efficiency Standards - 2019 Nonresidential Compliance
Registration Date/Time:
Report Version: 2019.0.001
Schema Version: rev 20190401
Registration Provider: EnergySoft
Report Generated: 2020-10-20 09:10:03

STATE OF CALIFORNIA
Indoor Lighting
NRCC-LTI-E
CALIFORNIA ENERGY COMMISSION

CERTIFICATE OF COMPLIANCE		NRCC-LTI-E
Project Name:	Replacement of Existing Residential Center	**Report Page:** (Page 5 of 7)
Project Address:	440 East Hill Road	**Date Prepared:** 10/20/2020

N. ADDITIONAL LIGHTING ALLOWANCE: TAILORED ORNAMENTAL/SPECIAL EFFECTS
This section does not apply to this project.

O. ADDITIONAL LIGHTING ALLOWANCE: TAILORED VERY VALUABLE MERCHANDISE
This section does not apply to this project.

P.POWER ADJUSTMENT: LIGHTING CONTROL CREDIT (POWER ADJUSTMENT FACTOR (PAF))
This section does not apply to this project.

Q. RATED POWER REDUCTION COMPLIANCE FOR ALTERATIONS
This section does not apply to this project.

R. 80% LIGHTING POWER FOR ALLALTERATIONS - CONTROLS EXCEPTIONS
This section does not apply to this project.

S. DAYLIGHT DESIGN POWER ADJUSTMENT FACTOR (PAF)
This section does not apply to this project.

Registration Number:
CA Building Energy Efficiency Standards - 2019 Nonresidential Compliance
Registration Date/Time:
Report Version: 2019.0.001
Schema Version: rev 20190401
Registration Provider: EnergySoft
Report Generated: 2020-10-20 09:10:03

STATE OF CALIFORNIA
Indoor Lighting
NRCC-LTI-E
CALIFORNIA ENERGY COMMISSION

CERTIFICATE OF COMPLIANCE		NRCC-LTI-E
Project Name:	Replacement of Existing Residential Center	**Report Page:** (Page 2 of 7)
Project Address:	440 East Hill Road	**Date Prepared:** 10/20/2020

C. COMPLIANCE RESULTS
If any cell on this table says "DOES NOT COMPLY" or "COMPLIES with Exceptional Conditions" refer to Table D. for guidance.

Lighting in conditioned and unconditioned spaces must not be combined for compliance per §140.6(b)1	Allowed Lighting Power per §140.6(b) (Watts) 01 Complete Building §140.6(c)1 (See Table I)	02 Area Category §140.6(c)2 (See Table I)	03 Area Category Additional §140.6(c)2(G) (+) (See Table J)	04 Tailored §140.6(c)3 (+) (See Table K)	=	05 Total Allowed (Watts)	≥	Adjusted Lighting Power per §140.6(a) (Watts) 06 Total Designed (Watts) (See Table F)	07 Adjustments PAF Lighting Control Credits §140.6(a)2 (-) (See Table P)	=	08 Total Adjusted (Watts) *Includes Adjustments	Compliance Results 09 05 must be >= 08 §140.6
Conditioned	0	1,405.55	0	0	=	1405.55	≥	1,353	0	=	1353	COMPLIES
Unconditioned	0	0	0	0	=		≥	0	0	=		
									Controls Compliance (See Table H for Details)			COMPLIES
									Rated Power Reduction Compliance (See Table Q for Details)			

D. EXCEPTIONAL CONDITIONS
This table is auto-filled with uneditable comments because of selections made or data entered in tables throughout the form.

E. ADDITIONAL REMARKS
This table includes remarks made by the permit applicant to the Authority Having Jurisdiction.

F. INDOOR LIGHTING FIXTURE SCHEDULE
This table includes all permanent designed lighting and all portable lighting in offices.
Designed Wattage: Conditioned Spaces

01 Name or Item Tag	02 Complete Luminaire Description	03 Modular (Track) Fixture	04 Small Aperture & Color Change[1]	05 Watts per luminaire[2]	06 How is Wattage determined	07 Total Number of Luminaires	08 Exempt per §140.6(a)3	09 Design Watts	10 Field Inspector Pass	10 Field Inspector Fail
19	19 - Linear LED	No	No	16	JA8 Lamp	20	No	320	☐	☐
22	22 - LED Reading Light	No	No	3	JA8 Lamp	36	No	108	☐	☐

Registration Number:
CA Building Energy Efficiency Standards - 2019 Nonresidential Compliance
Registration Date/Time:
Report Version: 2019.0.001
Schema Version: rev 20190401
Registration Provider: EnergySoft
Report Generated: 2020-10-20 09:10:03

TITLE 24 GENERAL NOTE

CONTRACTOR SHALL BE RESPONSIBLE FOR ALL WORK ASSOCIATED WITH FINAL INSPECTION AND APPLICABLE ACCEPTANCE REQUIREMENT PROCEDURES. INCLUDE ALL COSTS IN THE BASE BID. THIS SHALL INCLUDE, BUT NOT BE LIMITED TO, CONSTRUCTION INSPECTION, MEASUREMENTS, MONITORING, FUNCTIONAL TESTING, CALIBRATING, ETC. CONTRACTOR SHALL ASSUME THE ROLE OF "FIELD TECHNICIAN" AND "RESPONSIBLE PERSON" AS DEFINED IN STATE OF CALIFORNIA 2019 BUILDING ENERGY EFFICIENCY STANDARDS NONRESIDENTIAL COMPLIANCE MANUAL SECTION 13.2.2.

SEE STATE OF CALIFORNIA 2019 BUILDING ENERGY EFFICIENCY STANDARDS SECTIONS 10-103(a)3A AND 10-103(a)3B AND SECTION 130.4 FOR MORE INFORMATION.

SEE STATE OF CALIFORNIA 2019 BUILDING ENERGY EFFICIENCY STANDARDS NONRESIDENTIAL COMPLIANCE MANUAL CHAPTER 13 FOR MORE DETAILED REQUIREMENTS / INFORMATION.

SEE STATE OF CALIFORNIA 2019 BUILDING ENERGY EFFICIENCY STANDARDS RESIDENTIAL COMPLIANCE MANUAL CHAPTER 2 FOR MORE DETAILED REQUIREMENTS / INFORMATION.

PROVIDE COMPLETED INSTALLATION CERTIFICATE(S) AND CERTIFICATE(S) OF ACCEPTANCE AS REQUIRED TO THE SATISFACTION OF THE ENFORCEMENT AGENCY.

TITLE 24 PROCEDURES FOR TESTING AND ADJUSTING

CONTRACTOR SHALL BE RESPONSIBLE FOR ALL WORK ASSOCIATED WITH FINAL INSPECTION AND APPLICABLE ACCEPTANCE REQUIREMENT PROCEDURES. INCLUDE ALL COSTS IN THE BASE BID. THIS SHALL INCLUDE, BUT NOT BE LIMITED TO, CONSTRUCTION INSPECTION, MEASUREMENTS, MONITORING, FUNCTIONAL TESTING, CALIBRATING, ETC. CONTRACTOR SHALL ASSUME THE ROLE OF "FIELD TECHNICIAN" AND "RESPONSIBLE PERSON" AS DEFINED IN STATE OF CALIFORNIA 2019 BUILDING ENERGY EFFICIENCY STANDARDS NONRESIDENTIAL COMPLIANCE MANUAL SECTION 13.2.2.

LIGHTING CONTROL ACCEPTANCE TESTING AND ADJUSTING PROCEDURES – REFER TO NRCA-LTI-02-A DOCUMENTS.

AUTOMATIC DAYLIGHT CONTROL ACCEPTANCE TESTING AND ADJUSTING PROCEDURES – REFER TO NRCA-LTI-03-A DOCUMENTS.

DEMAND RESPONSE LIGHTING CONTROL ACCEPTANCE TESTING AND ADJUSTING PROCEDURES – REFER TO NRCA-LTI-04-A DOCUMENTS.

INSTITUTIONAL TUNING PAF ACCEPTANCE TESTING AND ADJUSTING PROCEDURES – REFER TO NRCA-LTI-05-A DOCUMENTS.

OUTDOOR LIGHTING CONTROL ACCEPTANCE TESTING AND ADJUSTING PROCEDURES – REFER TO NRCA-LTO-02-A DOCUMENTS.

ALL LIGHTING CONTROLS TESTING AND ADJUSTING DOCUMENTS NOTED ABOVE ARE AVAILABLE FROM THE CALIFORNIA ENERGY COMMISSION WEB SITE AT:

https://ww2.energy.ca.gov/title24/2019standards/2019_compliance_documents/Nonresidential_Documents/NRCA/

IDENTIFICATION STAMP
DIV. OF THE STATE ARCHITECT
APP: 02-118630 INC:
REVIEWED FOR
SS ☐ FLS ☐ ACS ☑
DATE: 04/13/2021

OFFICE OF THE STATE FIRE MARSHAL
APPROVED FIRE AND PANIC ONLY
Approval of this plan does not authorize or approve any omission or deviation from applicable regulations. Final approval is subject to field inspection. One set of approved plans shall be available on the project site at all times.
PERMIT NO: 28-N-3330-CP
REVIEWED BY: LEO CATALLO, OSFM
DATE: 4/1/2021

DGS
GENERAL SERVICES
Department of General Services
State of California
Real Estate Services Division
Project Management & Development Branch
707 Third Street, Suite 4-105
West Sacramento, California 95605

NICHOLS MELBURG & ROSSETTO ARCHITECTS + ENGINEERS
900 Knollcrest Drive
Redding, CA. 96002
(530) 222-3300 (530) 222-3538 FAX
http://www.nmrdesign.com

Copyright © 2019
All ideas, designs, arrangements and plans indicated or represented by this drawing are owned by, and the property of, NICHOLS, MELBURG and ROSSETTO and were created, evolved and developed for use on, and in connection with, the specified project. None of such ideas, designs, arrangements or plans shall be used by, or disclosed to, any person, firm or corporation for any purpose whatsoever without the written permission of NICHOLS, MELBURG and ROSSETTO.

LICENSE STAMPS

REGISTERED PROFESSIONAL ENGINEER RAYMOND W. SWARTZ No. E15610 12/31/2021 ELECTRICAL STATE OF CALIFORNIA
Date Signed: 3/25/2021

CONSULTANT
tk1sc COLLABORATIVE
11870 Pierce Street, Suite 160
Riverside, California 92505
951.299.4160 www.tk1sc.com
Project Leader - Jerry Leonhardt
Electrical Lead - Reid Cordry
tk1sc Job #:2019-0228A

DRAWING STATUS
CONSTRUCTION DOCUMENTS

ISSUE

No.	Date	Description
1	10/20/2020	INITIAL PLAN REVIEW
2	01/22/2021	AGENCY RESUBMITTAL
3	03/22/2021	AGENCY RESUBMITTAL

If drawing is not 30" x 42" it is a reduced print

PROJECT
RESIDENTIAL CENTER, UKIAH: REPLACEMENT OF EXISTING RESIDENTIAL CENTER
440 EAST HILL ROAD
WILLITS, CALIFORNIA 95490
MENDOCINO COUNTY
CALIFORNIA CONSERVATION CORP

Supervisor	Designed	Drawn
		Author

DSA Application No.
02-118630

SHEET TITLE
TITLE 24 COMET BUILDING

DGS Project Number	NMR Project Number
000000000001826	18-6456

Reference North: NORTH
Sheet Scale:
Sheet Number: E505C

ISSUE DATE
July 9, 2021

Plot Date: 3/22/2021 9:00:04 AM
File Name: BIM 360://CCC Willits Residential Center/E_CCC Willits_COMMON_2019-0228A.rvt

KEYNOTES

3.001 RECEPTACLE, SWITCH, AND LIGHT FIXTURE MOUNTED ABOVE CEILING. PROVIDE A KEYLESS PLASTIC LAMP HOLDER LEVITON #R50-08829-CW4, OR EQUAL, MOUNTED ON A JUNCTION BOX WITH ONE LED A19 9W LAMP. COORDINATE AND VERIFY EXACT MOUNTING LOCATION IN FIELD WITH MECHANICAL EQUIPMENT INSTALLER PRIOR TO ROUGH IN.

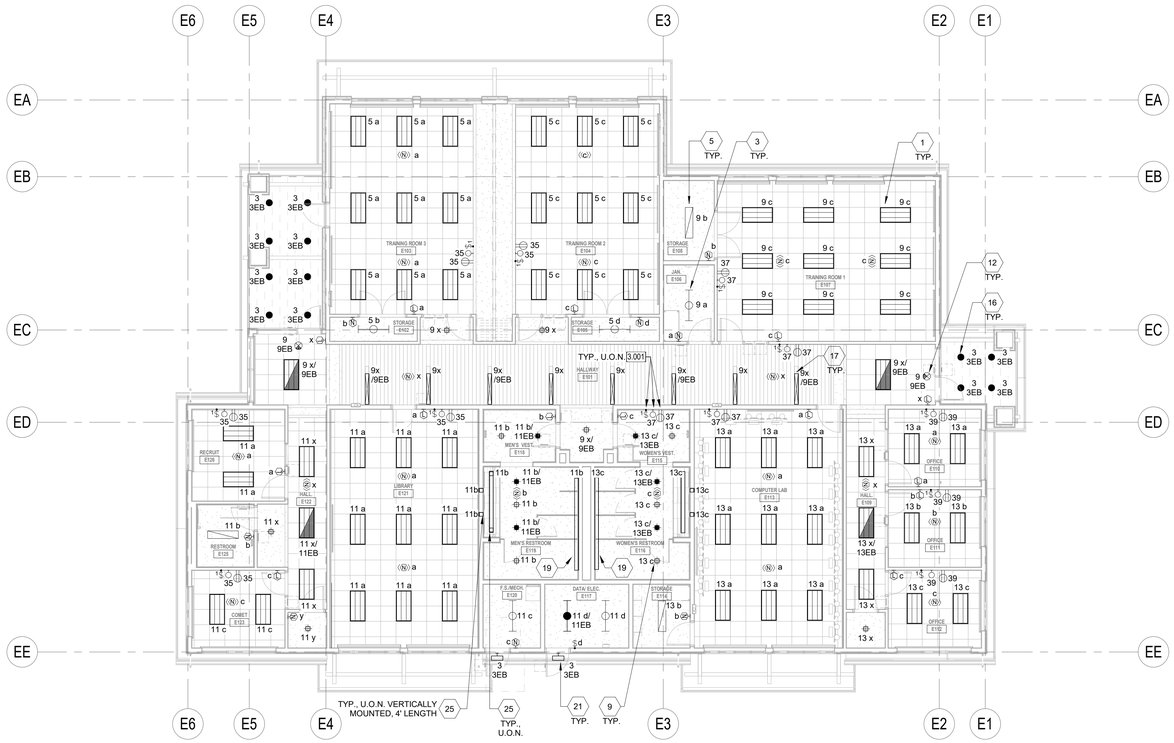

NORTH

EDUCATION BUILDING LIGHTING PLAN

SCALE: 1/8" = 1'-0"

VOLTAGE DROP WORKSHEET: REFERENCE ONLY

1. ALL BRANCH CIRCUITS ARE DESIGNED TO LIMIT VOLTAGE DROP 3% OR LESS USING THE FOLLOWING CRITERIA:

208 VOLT, 1 PHASE LOAD:

LOAD (VA)	DISTANCE	CU CONDUCTOR SIZE
0-1000 VA (500 PER PHASE) 0-4.8 AMPS	0-225 FT	#12
	226-360 FT	#10
	361-572 FT	#8
1001-2000 VA (1,000 PER PHASE) 4.8-9.6 AMPS	0-151 FT	#12
	152-240 FT	#10
	241-380 FT	#8
	381-604 FT	#6
2001-3,328 VA (1,664 PER PHASE) 9.6-16 AMPS	0-78 FT	#12
	79-125 FT	#10
	126-198 FT	#8
3329-4,992 VA (2,496 PER PHASE) 16-24 AMPS	0-52 FT	#12
	53-83 FT	#10
	84-132 FT	#8

120 VOLT, 1 PHASE LOAD:

LOAD (VA)	DISTANCE	CU CONDUCTOR SIZE
0-1000 VA 0-8 AMPS	0-130 FT	#12
	131-205 FT	#10
	205-330 FT	#8
1001-1500 VA 8-12.5 AMPS	0-87 FT	#12
	88-138 FT	#10
	139-219 FT	#8
	220-350 FT	#6
1501-1920 VA 12.5-16 AMPS	0-68 FT	#12
	69-108 FT	#10
	109-172 FT	#8
	173-273 FT	#6
1921-2880 VA 16-24 AMPS	0-72 FT	#10
	73-114 FT	#8
	115-182 FT	#6

ANY 3 PHASE LOADS GREATER THAN 30 AMPS ARE SHOWN ON THE FEEDER SCHEDULE OR MOTORIZED EQUIPMENT SCHEDULE WITH ASSOCIATED VOLTAGE DROP LIMITED TO 2% OR LESS.

LIGHTING PLAN GENERAL NOTES:

1. REFER TO ARCHITECTURAL PLANS FOR EXACT LOCATION AND ELEVATION OF ALL LIGHTING FIXTURES AND ALL DEVICES. ALL WALL-MOUNTED DEVICE HEIGHTS SHALL BE VERIFIED WITH THE ARCHITECT PRIOR TO ROUGH-IN.
2. VERIFY EXACT CEILING CONSTRUCTION WITH ARCHITECTURAL REFLECTED CEILING PLAN AND PROVIDE LIGHTING FIXTURES WITH ALL NECESSARY MOUNTING HARDWARE.
3. ALL RECESSED FIXTURES SHALL BE PROVIDED WITH ALL REQUIRED STRUCTURAL SUPPORTS AS REQUIRED BY THE CURRENTLY ADOPTED ISSUE OF THE IBC, OR CBC WHERE ADOPTED, IN ADDITION TO ANY LOCAL CODES
4. ALL COVE MOUNTED FIXTURES SHALL EXTEND THE FULL LENGTH OF THE COVE. CONTRACTOR TO FIELD MEASURE COVE LENGTH AND ORDER QUANTITY OF FIXTURES AS REQUIRED.
5. ALL DIMMING BRANCH CIRCUITS SHALL BE PROVIDED WITH A DEDICATED NEUTRAL CONDUCTOR FOR EACH ZONE/CHANNEL.
6. ALL FLUORESCENT DIMMING ZONES/CHANNELS SHALL BE PROVIDED WITH 3 LINE VOLTAGE CONDUCTORS (NEUTRAL, DIMMED HOT, SWITCHED HOT) OR 2 LINE VOLTAGE CONDUCTORS/2 CONTROL CONDUCTORS AS REQUIRED BY THE CONTROL/BALLAST TYPE.
7. ALL EMERGENCY BATTERY PACK FIXTURES SHALL BE PROVIDED WITH A CONSTANT HOT CONNECTION TO THE CHARGING LEAD. SEE GENERAL LIGHTING FIXTURE SCHEDULE NOTES FOR MORE INFORMATION.
8. REFER TO ARCHITECTURAL REFLECTED CEILING PLANS FOR EXIT SIGN CHEVRONS AND NUMBER OF FACES PER EXIT SIGN. ANY DISCREPANCIES BETWEEN EXIT SIGNS SHOWN ON THE ELECTRICAL AND ARCHITECTURAL PLANS SHALL BE BROUGHT TO THE ATTENTION OF THE ARCHITECT PRIOR TO ORDERING EXIT SIGNS.
9. WHEN EXPOSED CEILINGS OR OPEN GRID CONDITIONS OCCUR, THE CONTRACTOR WILL NEED TO PROVIDE THE FOLLOWING ITEMS:

   - ALL BRANCH CIRCUITS SHALL BE IN EMT.

   - ALL BRANCH CIRCUITS SHALL BE ROUTED, NEATLY TRAINED, AND IN PARALLEL TO STRUCTURES OR DUCT WORK. THE TERM "TRAINED" MEANS ALL PARALLEL CONDUITS SHALL MAINTAIN THE SAME SPATIAL RELATIONSHIP WITH EACH OTHER FOR ENTIRE RUN TO INCLUDE RADIUS BENDS AND SWEEPS.

   - VISUALLY OBJECTIONABLE BRANCH CIRCUITS WILL BE REROUTED AT THE REQUEST OF THE ARCHITECT AT NO ADDITIONAL COST.
10. ALL LED REMOTE INDICATORS FOR DUCT DETECTORS AND FIRE/SMOKE DAMPERS REQUIRED BY THE SFM SHALL BE LOCATED IN CEILINGS IN COORDINATION WITH ARCHITECT PRIOR TO ANY ROUGH-IN.
11. RECESSED FIXTURES LOCATED IN A FIRE-RATED CEILING OR WALL SHALL BE PROVIDED WITH A 5-SIDED RATED ENCLOSURE SO CONSTRUCTED AS TO ALLOW CODE AND MANUFACTURER-REQUIRED CLEARANCES BETWEEN THE FIXTURE AND THE ENCLOSURE.
12. PROVIDE REDUNDANT GROUND PATH IN ALL BRANCH CIRCUITS SERVING PATIENT CARE AREAS CONSISTING OF A SEPARATE INSULATED EQUIPMENT GROUNDING CONDUCTOR PER NEC, OR CEC WHERE ADOPTED, ART 517.13.
13. PROVIDE ADDITIONAL J-BOX NEAR PANEL FOR MULTIPLE HOMERUN CIRCUITRY.
14. UNLESS SPECIFICALLY SHOWN AS (E), (R), (ER), (D), EXISTING OR NON-BOLD, ALL ELECTRICAL DEVICES SHOWN ARE NEW.
15. REFER TO GENERAL POWER PLAN NOTES AND COMMUNICATIONS PATHWAYS GENERAL NOTES FOR ADDITIONAL REQUIREMENTS WHEN POWER AND/OR DATA DEVICES ARE SHOWN ON THIS PLAN.
16. CONTRACTOR SHALL PROVIDE CONDUIT AND WIRE FOR ALL DEVICES TO PANELBOARD(S) INDICATED ON PLANS FOR A COMPLETE AND OPERABLE SYSTEM.
17. CONTRACTOR SHALL PROVIDE MINIMUM 2#12, 1#12G IN ½" CONDUIT UNLESS OTHERWISE NOTED. REFERENCE WIRE SIZE TABLE CHART ABOVE. WHERE REQUIRED, CONDUIT AND WIRE SHALL BE UPSIZED TO MEET THE REQUIREMENT OF THE DEVICE BEING SERVED BY THE BRANCH CIRCUIT. WHERE CONDUIT AND WIRING IS INDICATED AT THE HOME RUN, WIRING AND CONDUIT SHALL CONTINUE AT THAT SIZE FOR THE ENTIRE LENGTH OF THE CIRCUIT.
18. CONTRACTOR SHALL FURNISH ADDITIONAL SWITCHLEGS OR HOT WIRES AS REQUIRED TO MEET THE CONTROL INTENT OF THE DOCUMENTS AND AS REQUIRED BY CODE (I.E. EMERGENCY LIGHTING AND SWITCHED RECEPTACLES).
19. MULTIPLE CIRCUITS MAY BE USED IN A SINGLE RACEWAY. NO MORE THAN (3) DEDICATED CIRCUITS OR (4) CURRENT CARRYING CONDUCTORS SHALL BE INSTALLED IN ANY RACEWAY UNLESS OTHERWISE NOTED. WHERE A COMMON GROUNDED CONDUCTOR IS USED FOR MULTIPLE INDIVIDUAL BRANCH CIRCUITS, PER SECTIONS CEC 200.4, 250.122, 310.15(B)(2), CONDUIT SIZE SHALL BE INCREASED AS REQUIRED FOR THE CONDUCTORS INCLUDING TEMPERATURE DERATING PER CEC TABLE C1.
20. FURNISH AND INSTALL JUNCTION BOXES AS REQUIRED TO MEET MAXIMUM BEND REQUIREMENTS FOR PULLING WIRES PER CEC 358.26. JUNCTION BOXES SHALL BE SIZED AS REQUIRED PER CEC 314.28 UNLESS OTHERWISE NOTED.

WALL TYPES LEGEND

SEE SHEET G121 FOR ASSEMBLY TYPES

EXTERIOR

2 x 6 WOOD STUD WALL - NON RATED	0-W1-6 * ● #
2 x 12 WOOD STUD WALL - NON RATED	0-W1-12 * ● #

INTERIOR

2 x 4 WOOD STUD WALL - NON RATED	0-W2-4 * ● #
2 x 6 WOOD STUD WALL - NON RATED	0-W2-6 * ● #
2 x 8 WOOD STUD WALL - NON RATED	0-W2-8 * ● #
2 x 12 WOOD STUD WALL - NON RATED	0-W2-12 * ● #
2 x 4 WOOD STUD WALL - ACOUSTIC	0-W5-4 * ● #
2 x 6 WOOD STUD WALL - ACOUSTIC	0-W5-6 * ● #
2 X 4 WOOD STUD WALL - 1-HR FIRE PARTITION W/ PROTECTED OPENINGS	1-W3-4 * ● #
2 X 6 WOOD STUD WALL - 1-HR FIRE PARTITION W/ PROTECTED OPENINGS	1-W3-6 * ● #

WALL TYPE NOTES

PARTITION SYMBOL

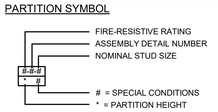

IDENTIFICATION STAMP
DIV. OF THE STATE ARCHITECT
APP: 02-118630 INC:
REVIEWED FOR
SS ☐ FLS ☐ ACS ☑
DATE: 04/13/2021

OFFICE OF THE STATE FIRE MARSHAL
APPROVED FIRE AND PANIC ONLY
Approval of this plan does not authorize or approve any omission or deviation from applicable regulations. Final approval is subject to field inspection. One set of approved plans shall be available on the project site at all times.
PERMIT NO: 28 N 2332 CP
REVIEWED BY: LEO CATAYLO, OSFM
DATE: 4/ /2021

DGS GENERAL SERVICES
Department of General Services
State of California
Real Estate Services Division
Project Management & Development Branch
707 Third Street, Suite 4-105
West Sacramento, California 95605

NICHOLS MELBURG & ROSSETTO ARCHITECTS + ENGINEERS
300 Knollcrest Drive
Redding, CA. 96002
(530) 222-3300 (530) 222-3538 FAX
http://www.nmrdesign.com

Copyright © 2019
All ideas, designs, arrangements and plans indicated or represented by this drawing are owned by, and the property of, NICHOLS, MELBURG and ROSSETTO and were created, evolved and developed for use on, and in connection with, the specified project. None of such ideas, designs, arrangements or plans shall be used by, or disclosed to any person, firm or corporation for any purpose whatsoever without the written permission of NICHOLS, MELBURG and ROSSETTO.

LICENSE STAMPS

REGISTERED PROFESSIONAL ENGINEER RAYMOND W. SWIFT No. E15610 12/31/2021 ELECTRICAL STATE OF CALIFORNIA
Date Signed: 3/25/2021

CONSULTANT
tk1sc COLLABORATIVE
11870 Pierce Street, Suite 160
Riverside, California 92505
951.299.4160 www.tk1sc.com
Project Leader - Jerry Leonhardt
Electrical Lead - Reid Cordry
tk1sc Job #:2019-0228A

DRAWING STATUS
CONSTRUCTION DOCUMENTS

ISSUE

No.	Date	Description
1	10/20/2020	INITIAL PLAN REVIEW
2	01/22/2021	AGENCY RESUBMITTAL
3	03/22/2021	AGENCY RESUBMITTAL

If drawing is not 30" x 42" it is a reduced print

PROJECT
RESIDENTIAL CENTER, UKIAH: REPLACEMENT OF EXISTING RESIDENTIAL CENTER
440 EAST HILL ROAD
WILLITS, CALIFORNIA 95490
MENDOCINO COUNTY
CALIFORNIA CONSERVATION CORP

Supervisor	Designed	Drawn
		Author

DSA Application No.
XX-XXXXXX

SHEET TITLE
EDUCATION BUILDING LIGHTING PLAN

DGS Project Number	NMR Project Number
XXXXX	18-6456

Reference North: NORTH
Sheet Scale: As indicated
Sheet Number: E101E

ISSUE DATE
July 9, 2021

Plot Date: 3/22/2021 9:15:49 AM
File Name: BIM 360://CCC Willits Residential Center/E_CCC Willits_ED_2019-0228A.rvt

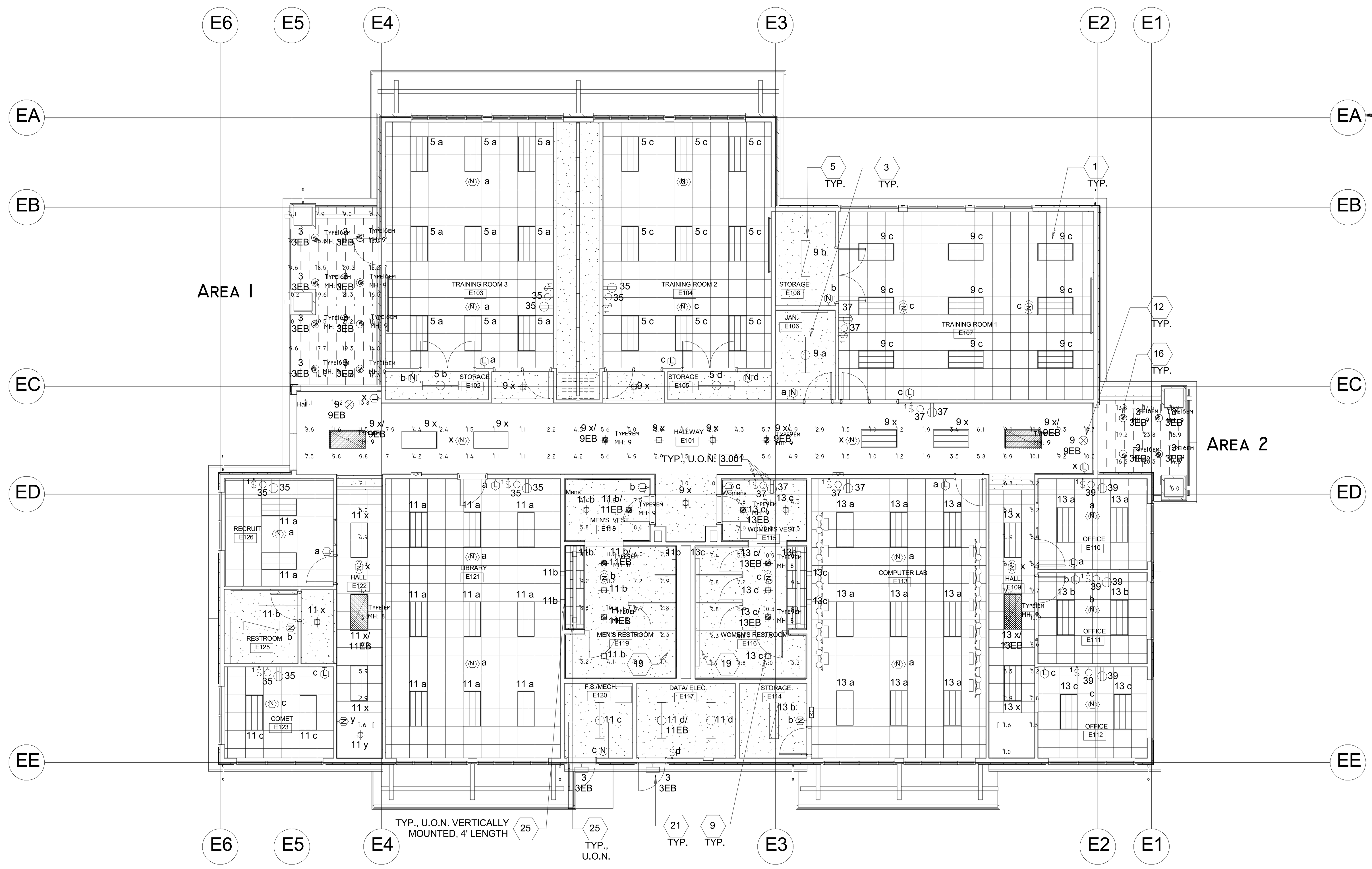

Luminaire Schedule

Symbol	Qty	Label	Arrangement	Description	BUG Rating
	4	Type1em	SINGLE	Cooper Metalux 24RLN-LD5-42-UNV-L835-CD1-U-EL14	B2-U0-G1
	12	Type16em	SINGLE	Cooper Halo Commercial PD615ED010- PDM6A835-61VC-em7wbattery	B2-U0-G0
	8	Type9em	SINGLE	Cooper Halo Commercial HC610D010-HM612835-61WDWF	B1-U0-G0

Calculation Summary

Label	CalcType	Units	Avg	Max	Min	Avg/Min	Max/Min
Area1	Illuminance	Fc	14.03	21.3	4.1	3.42	5.20
Area2	Illuminance	Fc	15.95	23.8	6.0	2.66	3.97
Hall_Floor	Illuminance	Fc	5.45	14.2	1.0	5.45	14.20
Mens_Floor	Illuminance	Fc	6.24	11.2	1.4	4.46	8.00
Womens_Floor	Illuminance	Fc	6.26	11.2	1.4	4.47	8.00

EDUCATION BUILDING EMERGENCY LIGHTING PHOTOMETRIC PLAN

NORTH

SCALE: 1/8" = 1'-0"

IDENTIFICATION STAMP
DIV. OF THE STATE ARCHITECT
APP: 02-118630 INC:
REVIEWED FOR
SS ☐ FLS ☐ ACS ☑
DATE: 04/13/2021

OFFICE OF THE STATE FIRE MARSHAL
APPROVED FIRE AND PANIC ONLY
Approval of this plan does not authorize or approve any omission or deviation from applicable regulations. Final approval is subject to field inspection. One set of approved plans shall be available on the project site at all times.
PERMIT NO.: 20 N 2332-CP
REVIEWED BY: LEO CATAYLO, OSFM
DATE: 4/1/2021

DGS
GENERAL SERVICES
Department of General Services
State of California
Real Estate Services Division
Project Management & Development Branch
707 Third Street, Suite 4-105
West Sacramento, California 95605

NICHOLS MELBURG & ROSSETTO
ARCHITECTS + ENGINEERS
300 Knollcrest Drive
Redding, CA. 96002
(530) 222-3300 (530) 222-3538 FAX
http://www.nmrdesign.com

Copyright © 2019
All ideas, designs, arrangements and plans indicated or represented by this drawing are owned by, and the property of, NICHOLS, MELBURG and ROSSETTO and were created, evolved and developed for use on, and in conjunction with, the specified project. None of such ideas, designs, arrangements or plans shall be used by, or disclosed to any person, firm or corporation for any purpose whatsoever without the written permission of NICHOLS, MELBURG and ROSSETTO.

LICENSE STAMPS

REGISTERED PROFESSIONAL ENGINEER
RAYMOND W. SWARTZ
No. E15610
Exp. 12/31/2021
ELECTRICAL
STATE OF CALIFORNIA
Date Signed 3/25/2021

CONSULTANT

tklsc
COLLABORATIVE
11870 Pierce Street, Suite 160
Riverside, California 92505
951.299.4160 www.tk1sc.com
Project Leader - Jerry Leonhardt
Electrical Lead - Reid Cordry
tk1sc Job #:2019-0228A

DRAWING STATUS
CONSTRUCTION DOCUMENTS

ISSUE

No.	Date	Description
1	10/20/2020	INITIAL PLAN REVIEW
2	01/22/2021	AGENCY RESUBMITTAL
3	03/22/2021	AGENCY RESUBMITTAL

If drawing is not 30" x 42" it is a reduced print

PROJECT
RESIDENTIAL CENTER, UKIAH: REPLACEMENT OF EXISTING RESIDENTIAL CENTER
440 EAST HILL ROAD
WILLITS, CALIFORNIA 95490
MENDOCINO COUNTY
CALIFORNIA CONSERVATION CORP

Supervisor	Designed	Drawn
		Author

DSA Application No.
XX-XXXXXX

SHEET TITLE
EDUCATION BUILDING EMERGENCY LIGHTING PHOTOMETRIC PLAN

DGS Project Number	NMR Project Number
XXXXX	18-6456

Reference North: NORTH
Sheet Scale: 1/8" = 1'-0"
Sheet Number: E102E

ISSUE DATE
July 9, 2021

Plot Date: 3/22/2021 9:15:51 AM
File Name: BIM 360://CCC Willits Residential Center/E_CCC Willits_ED_2019-0228A.rvt

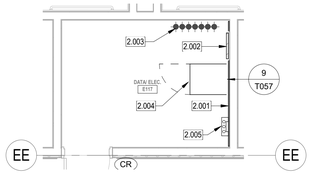

FLOOR PLAN

2 EDUCATION BUILDING ENLARGED IDF PLANS E117

SCALE: 1/4" = 1'-0"

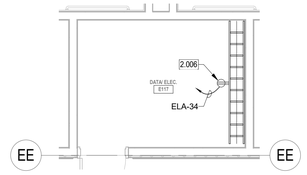

LADDER RUNWAY PLAN

3 EDUCATION BUILDING ENLARGED IDF LADDER RUNWAY

SCALE: 1/4" = 1'-0"

KEYNOTES

2.001 PLYWOOD BACKBOARD AND TELECOMMUNICATIONS BUSBAR BY E.C. SCS CONTRACTOR SHALL INSTALL #6 WITH GREEN INSULATION TO EACH DATA EQUIPMENT RACK/CABINET, OVERHEAD LADDER TRAY/LADDER RACK, TELECOMMUNICATIONS CONDUITS, TELECOMMUNICATIONS CABLE TRAY(S), ANTI STATIC TILE GROUNDING POINTS ETC. AS REQUIRED. CONNECTIONS SHALL BE MADE WITH 2 HOLE COMPRESSION CONNECTORS. ALL CONNECTIONS SHALL BE BARE METAL TO BARE METAL USING APPROPRIATE ANTIOXIDANT COMPOUND.

2.002 WALL FIELD FOR CAMPUS COPPER BACKBONE CABLE

2.003 4" UNDERGROUND CONDUIT FOR CAMPUS BACKBONE CABLE

2.004 WALL MOUNT CABINET, (CPI PN#12419-736, CPI PN#40975-001, CPI PN#40973-001) ON EXISTING WALL BOARD. SCS CONTRACTOR TO VERIFY PROPER SPACE AND CLEARANCE BEFORE INSTALLATION.

2.005 ANSI-J-STD 607A COMPLIANT U.L.-LISTED TELECOMMUNICATIONS MAIN GROUND BUSBAR (TMGB) CHATSWORTH #40153-020 OR EQUAL BY HARGER. MOUNT 12"A.F.F. . PROVIDE 1/8" BRASS ENGRAVED NAMEPLATE WITH ABBREVIATION "T.M.G.B." AND ATTACH TO BUS BAR. PROVIDE #6 GROUND CONDUCTOR WITH GREEN INSULATION TO EACH DATA EQUIPMENT RACK/CABINET, OVERHEAD LADDER TRAY/LADDER RACK, ETC. AS REQUIRED. CONNECTIONS SHALL BE MADE WITH 2 HOLE COMPRESSION CONNECTORS. CONNECTIONS SHALL BE BARE METAL TO BARE METAL USING APPROPRIATE ANTIOXIDANT COMPOUND. PROVIDE ALL OTHER GROUNDING REQUIREMENTS AS DETAILED IN THE PATHWAYS & GROUNDING RISER DIAGRAM SHEET T4.07. ELECTRICAL CONTRACTOR SHALL PROVIDE 1/2"C. WITH #6AWG WITH GREEN INSULATION FROM TMGB TO GROUND BUSBAR LOCATED INSIDE MPOE ROOM ELECTRICAL PANEL. ELECTRICAL CONTRACTOR SHALL PROVIDE TELECOMMUNICATIONS BONDING CONDUCTOR (TBC) CONSISTING OF (1) 1"C., W/ #1AWG (U.O.N.) WITH GREEN INSULATION CONNECTING MAIN BUILDING GROUND BUS BAR LOCATED IN MAIN ELECTRICAL ROOM TO THE TELECOMMUNICATIONS MAIN GROUNDING BUSBAR (TMGB) UTILIZING 2-HOLE COMPRESSION CONNECTORS. LABEL EACH END OF TBC WITH A GROUND WARNING TAG (PANDUIT #PT-BGRND OR EQUAL).

2.006 NEMA L6-30R 30A TWIST-LOCK MOUNTED TO LADDER RACK, PROVIDED BY E.C.

2.014 CONNECT COMPLETE TO WATER HEATER AS REQUIRED. PROVIDE CODE SIZED DISCONNECT SWITCH AT THE WATER HEATER AS REQUIRED. COORDINATE LOCATION WITH PLUMBING CONTRACTOR PRIOR TO ROUGH-IN.

2.015 CONNECT CIRCULATION PUMP. TIME CLOCK AND/OR AQUASTAT AS REQUIRED. PROVIDE CODE SIZED DISCONNECT SWITCH AS REQUIRED. SEE PLUMBING PLANS FOR MORE INFORMATION. COORDINATE LOCATION WITH PLUMBING CONTRACTOR PRIOR TO ROUGH-IN.

KEYNOTES

2.016 PROVIDE CONNECTION TO ELECTRIC HAND DRYERS PER MANUFACTURER'S REQUIREMENTS.

2.026 ACCESS CONTROL SYSTEM CARD READER WITH CONDUIT AND CABLING, PER SPECIFICATIONS. SEE SHEET T.056 FOR MORE INFORMATION.

2.027 CCTV LOCATION, EXTERIOR MOUNT IOP CAMERA. PROVIDE AND INSTALL FLUSH MOUNTED SINGLE GANG J-BOX WITH 1" WATERPROOF SLEEVE TO THE ACCESSIBLE CEILING SPACE FOR FUTURE EXTERIOR CCTV CAMERA. PROVIDE (1)CAT-6A CABLE TO EQUIPMENT PATCH PANEL IN NEAREST IDF/MDF ROOM. PROVIDE FIRE STOP PER CODE. MINIMUM 1/2" DEEP FIRE STOP PUTTY ON EACH SIDE FOR SOUND ISOLATION FOR FIRE RATED WALL PENETRATIONS. COORDINATE FINAL LOCATION WITH ARCH RCP. SEE SHEET T055 FOR MORE INFORMATION.

2.028 CCTV LOCATION. INTERIOR MOUNT IP CAMERA. PROVIDE AND INSTALL 5S DEEP BOX MOUNTED IN ACCESSIBLE CEILING ABOVE CAMERA WITH CONDUIT TO NEAREST ACCESSIBLE CEILING SPACE OR MDF/IDF. PROVIDE (1) CAT-6A CABLE TO EQUIPMENT PATCH PANEL IN NEAREST IDF/MDF ROOM. COORDINATE FINAL LOCATION WITH ARCH RCP. SEE SHEET T055 FOR MORE INFORMATION.

2.037 NEMA WIRELESS ACCESS POINT ENCLOSURE OBERON MODEL #1026-14126 OR EQUAL - FOR OWNER'S WAP ANTENNA AND ACCESS POINT EQUIPMENT. COORDINATE FINAL MOUNTING LOCATION AND HEIGHT OF NEMA BOXES WITH OWNER PRIOR TO ROUGH IN. PROVIDE CAT-6 CABLE FROM ACCESS POINT TO EQUIPMENT PATCH PANEL IN NEAREST IDF/MDF ROOM.

2.041 WALL MOUNT HDMI INPUT, SEE SINGLE LINE DIAGRAM SHEET E605 AND SPECIFICATIONS FOR MORE INFORMATION.

2.042 WALL MOUNT AV SPEAKER. SEE SINGLE LINE DIAGRAM SHEET E605 AND SPECIFICATIONS FOR MORE INFORMATION.

2.043 WALL MOUNT AV CONTROL PANEL. SEE SINGLE LINE DIAGRAM SHEET E605 AND SPECIFICATIONS FOR MORE INFORMATION.

6.101 PROVIDE AND INSTALL (1) 1-1/4" CONDUIT SLEEVES FOR LOW VOLTAGE SYSTEMS CABLING. SLEEVES TO BE STUBBED OUT IN ACCESSIBLE CEILING SPACES MIN. 6" ABOVE T-BAR AS REQUIRED. PROVIDE FIRE STOP PER CODE. SEE DETAIL 10/E601.

6.102 PROVIDE AND INSTALL (1) 2" CONDUIT SLEEVES FOR LOW VOLTAGE SYSTEMS CABLING. SLEEVES TO BE STUBBED OUT IN ACCESSIBLE CEILING SPACES MIN. 6" ABOVE T-BAR AS REQUIRED. SEE DETAIL 10/E601.

6.103 PROVIDE AND INSTALL (2) 2" CONDUIT SLEEVES FOR LOW VOLTAGE SYSTEMS CABLING. SLEEVES TO BE STUBBED OUT IN ACCESSIBLE CEILING SPACES MIN. 6" ABOVE T-BAR AS REQUIRED. SEE DETAIL 10/E601

6.104 PROVIDE AND INSTALL (4) 2" CONDUIT SLEEVES FOR LOW VOLTAGE SYSTEMS CABLING. SLEEVES TO BE STUBBED OUT IN ACCESSIBLE CEILING SPACES MIN. 6" ABOVE T-BAR AS REQUIRED. SEE DETAIL 10/E601

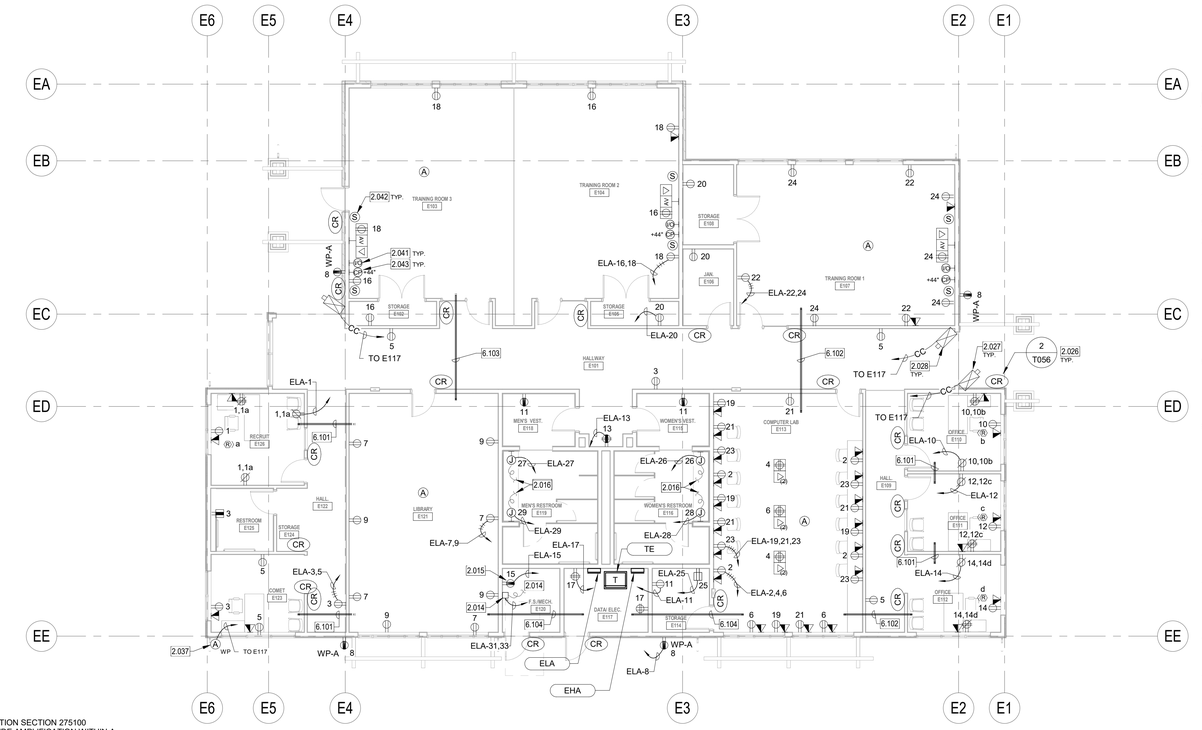

POWER PLAN GENERAL NOTES:

1. ALL RECEPTACLES ON COMMON WALLS SHALL BE SEPARATE BOXES AND OFFSET 24-INCHES MINIMUM.
2. ALL PENETRATIONS THROUGH FIRE RATED WALLS SHALL BE PROTECTED FROM THE SPREAD OF FIRE WITH AN APPROVED FIRESTOP SYSTEM EQUAL OR GREATER THAN THE FIRE RATING OF THE WALL.
3. ALL WALL-MOUNTED DEVICE HEIGHTS SHALL BE VERIFIED WITH THE ARCHITECT PRIOR TO ROUGH-IN.
4. ALL FURNITURE FEED LOCATIONS TO BE VERIFIED WITH ARCHITECT AND FURNITURE VENDOR PRIOR TO ROUGH-IN.
5. ALL FURNITURE WHIPS SHALL BE TRIMMED TO REDUCE EXCESS WHIP LENGTH.
6. WHEN EXPOSED CEILINGS OR OPEN GRID CONDITIONS OCCUR, THE CONTRACTOR WILL NEED TO PROVIDE THE FOLLOWING ITEMS:

   - ALL BRANCH CIRCUITS SHALL BE IN EMT.

   - ALL BRANCH CIRCUITS SHALL BE ROUTED NEATLY AND IN PARALLEL TO STRUCTURES OR DUCT WORK.

   - VISUALLY OBJECTIONABLE BRANCH CIRCUITS SHALL BE REROUTED AT THE REQUEST OF THE ARCHITECT AT NO ADDITIONAL COST.
7. EXPOSED CABLE/CONDUCTORS INSTALLED IN A PLENUM SPACE SHALL CONFORM TO NEC, OR CEC WHERE ADOPTED, ARTICLE 300.22(C).
8. PROVIDE G.F.C.I. TYPE RECEPTACLE(S) OR RECEPTACLE(S) PROTECTED BY A GFCI CIRCUIT BREAKER(S) WHEN LOCATED WITHIN 6 FEET OF ANY SINK OR THERAPEUTIC TUB, LAUNDRY AREA, SERVING ANY DRINKING FOUNTAIN OR VENDING MACHINE, WITHIN ANY KITCHEN SPACE AND/OR LOCATED OUTDOORS. WHERE RECEPTACLES ARE NOT READILY ACCESSIBLE, PROVIDE GFCI CIRCUIT BREAKER(S) TO PROTECT THE RESPECTIVE BRANCH CIRCUIT AND PROVIDE ADDITIONAL NEUTRAL CONDUCTORS IN THE BRANCH CIRCUITING AS REQUIRED TO ENSURE PROPER GFCI FUNCTION
9. PROVIDE OCCUPANCY SENSOR/LIGHTING CONTROL SYSTEM CONTROLLED RECEPTACLE RELAY(S) AS REQUIRED TO SWITCH CONTROLLED RECEPTACLES. CONNECT BRANCH CIRCUITRY AND CONTROL WIRING AS REQUIRED TO ALLOW OCCUPANCY SENSOR/LIGHTING CONTROL SYSTEM RELAY TO SWITCH STANDALONE AND/OR SYSTEMS FURNITURE CONTROLLED RECEPTACLES AS INDICATED ON PLANS. PROVIDE ADDITIONAL CONDUIT, WIRING AND PATHWAYS NECESSARY TO CONNECT BRANCH CIRCUITRY AND CONTROL WIRING TO REMOTE RELAYS TO INCLUDE RELAY(S) LOCATED ON ALTERNATE FLOORS, IN ELECTRICAL ROOMS, ETC.
10. UNLESS SPECIFICALLY SHOWN AS (E), (R), (ER), (D), EXISTING OR NON-BOLD, ALL ELECTRICAL DEVICES SHOWN ARE NEW.
11. PROVIDE REDUNDANT GROUND PATH IN ALL BRANCH CIRCUITS SERVING PATIENT CARE AREAS CONSISTING OF A SEPARATE, INSULATED EQUIPMENT GROUNDING CONDUCTOR PER NEC, OR CEC WHERE ADOPTED, ART 517.13.
12. CONTRACTOR SHALL PROVIDE CONDUIT AND WIRE FOR ALL DEVICES TO PANELBOARD(S) INDICATED ON PLANS FOR A COMPLETE AND OPERABLE SYSTEM.
13. CONTRACTOR SHALL PROVIDE MINIMUM 2#12, 1#12G IN ½" CONDUIT UNLESS OTHERWISE NOTED. REFERENCE WIRE SIZE TABLE CHART ABOVE. WHERE REQUIRED, CONDUIT AND WIRE SHALL BE UPSIZED TO MEET THE REQUIREMENT OF THE DEVICE BEING SERVED BY THE BRANCH CIRCUIT. WHERE CONDUIT AND WIRING IS INDICATED AT THE HOME RUN, WIRING AND CONDUIT SHALL CONTINUE AT THAT SIZE FOR THE ENTIRE LENGTH OF THE CIRCUIT.
14. CONTRACTOR SHALL FURNISH ADDITIONAL SWITCHLEGS OR HOT WIRES AS REQUIRED TO MEET THE CONTROL INTENT OF THE DOCUMENTS AND AS REQUIRED BY CODE (I.E. EMERGENCY LIGHTING AND SWITCHED RECEPTACLES).
15. MULTIPLE CIRCUITS MAY BE USED IN A SINGLE RACEWAY. NO MORE THAN (3) DEDICATED CIRCUITS OR (4) CURRENT CARRYING CONDUCTORS SHALL BE INSTALLED IN ANY RACEWAY UNLESS OTHERWISE NOTED. WHERE A COMMON GROUNDED CONDUCTOR IS USED FOR MULTIPLE INDIVIDUAL BRANCH CIRCUITS, PER SECTIONS CEC 200.4, 250.122, 310.15(B)(2), CONDUIT SIZE SHALL BE INCREASED AS REQUIRED FOR THE CONDUCTORS INCLUDING TEMPERATURE DERATING PER CEC TABLE C1.
16. FURNISH AND INSTALL JUNCTION BOXES AS REQUIRED TO MEET MAXIMUM BEND REQUIREMENTS FOR PULLING WIRES PER CEC 358.26. JUNCTION BOXES SHALL BE SIZED AS REQUIRED PER CEC 314.28 UNLESS OTHERWISE NOTED.

COMMUNICATIONS PATHWAYS GENERAL NOTES

1. CONDUITS SHALL, (a) CONTAIN NO CONTINUOUS SECTIONS LONGER THAN 30M (98 FT.), AND, (b) CONTAIN NO MORE THAN (2) 90° BENDS OR (1) REVERSE BEND WITHOUT INSTALLING A PULLBOX. SPLIT CONDUITS IN PLACE OF PULLBOXES ARE UNACCEPTABLE.
2. CONDUITS SHALL CONTAIN PLASTIC OR NYLON PULL TAPE RATED AT 200 LBS. WITH A MINIMUM OF 5 FEET OF EXTRA PULL TAPE COILED AT EACH END.
3. CONDUIT BEND RADIUS SHALL BE (a) A MINIMUM OF 6 TIMES THE INTERNAL CONDUIT DIAMETER FOR CONDUITS 2" IN DIAMETER OR LESS, AND, (b) 10 TIMES THE INTERNAL CONDUIT DIAMETER FOR CONDUITS MORE THAN 2" IN DIAMETER.
4. TERMINATE CONDUIT STUBS AND SLEEVES THAT PROTRUDE THROUGH STRUCTURAL FLOORS 2"-3" ABOVE THE FLOOR SURFACE.
5. INSTALL BUSHINGS OR BELL ENDS AS REQUIRED ON ALL CONDUITS.
6. FLEX CONDUIT IS UNACCEPTABLE FOR USE AS A COMMUNICATIONS CONDUIT EXCEPT AT SEISMIC JOINTS AND/OR IF APPROVED IN WRITING BY THE ENGINEER.
7. ALL UNDER SLAB OR IN-SLAB CONDUITS SHALL BE INSTALLED IN A MANNER THAT PREVENTS WATER INFILTRATION OF THE CONDUIT. IT IS THE CONTRACTOR'S RESPONSIBILITY TO ENSURE GROUND WATER, RAIN WATER OR CONSTRUCTION WATER IS PREVENTED FROM ENTERING AND/OR REMOVED FROM THE CONDUITS PRIOR TO PLACEMENT OF COMMUNICATIONS CABLES. SEE ELECTRICAL SPECIFICATIONS, DETAILS AND PLANS FOR ADDITIONAL CONDUIT SEALING REQUIREMENTS.
8. ALL PULLBOXES SHALL BE SIZED AND INSTALLED PER ANSI-TIA-569-C. PULLBOXES FOR IN/UNDER SLAB CONDUIT RUNS ARE NOT PERMITTED UNLESS OTHERWISE NOTED. PULLBOXES FOR OVERHEAD CONDUIT RUNS SHALL BE LOCATED ABOVE ACCESSIBLE CEILINGS WITHIN THE ACCESSIBLE CEILING SPACE AND SUPPORTED INDEPENDENTLY FROM THE STRUCTURE AND CONDUIT SUPPORTS. PULLBOXES FOR ROOF MOUNTED OR EXTERIOR ABOVE GRADE APPLICATIONS SHALL BE NEMA 3R RATED. PULLBOXES SHALL BE SIZED ACCORDING TO THE FOLLOWING:

CONDUIT SIZE	WIDTH	LENGTH	DEPTH	WIDTH INCREASE PER ADDITIONAL CONDUIT
1"	4"	16"	3"	2"
2"	8"	36"	4"	5"
3"	12"	48"	5"	6"
4"	15"	60"	8"	8"

FOR OTHER CONDUIT SIZES REFER TO ANSI/TIA-569-C TABLE 12. - LATEST PUBLISHED EDITION.

9. CONDUIT(S) SHALL EXIT A PULLBOX ON THE WALL OPPOSITE THE WALL ENTERED.
10. PROVIDE LABELING OF EACH CONDUIT PER GENERAL ELECTRICAL SPECIFICATIONS.
11. PROVIDE INTERNAL/EXTERNAL GAS AND WATER TIGHT MECHANICAL SEALING/PLUGGING OF EACH BUILDING ENTRY CONDUIT AS SPECIFIED ELSEWHERE IN THE DRAWINGS AND SPECIFICATIONS.

ASSISTIVE LISTENING SYSTEM NOTES:

PROVIDE PORTABLE BY LISTEN TECHNOLOGIES OR EQUIVALENT AS SPECIFIED HEREIN. SEE SPECIFICATION SECTION 275100 (PORTABLE) FOR MORE INFORMATION. THE LT-700 TRANSMITTERS AND LR-400 RECEIVERS SHALL PROVIDE AMPLIFICATION WITHIN A ROOM FOR INDIVIDUALS WITH NORMAL HEARING AND FOR THOSE WITH MINIMUM TO MILD HEARING LOSS IN 10 TO 25 dB RANGE. THE RECEIVERS SHALL BE ABLE TO AMPLIFY THE SPEAKER'S VOICE 100-120 dB ABOVE ROOM NOISE. THEY SHALL HAVE AN AUXILIARY INPUT JACK TO BROADCAST EXTERNAL SOUNDS FROM AN AUDIBLE DEVICE OR TELEVISION. THE RECEIVERS SHALL HAVE AN AUXILIARY VOLUME CONTROL TO CONTROL THE SOUND LEVEL OF INPUT RECEIVED FROM EXTERNAL SOURCES. THE UNITS SHALL HAVE AN FM VOLUME CONTROL TO ALLOW FOR ADJUSTMENT OF THE SOUND LEVEL OF THE FM SIGNAL RECEIVED FROM THE LT-700 WIRELESS TRANSMITTER. THE RECEIVER MUST HAVE A TONE CONTROL TO ADJUST THE FREQUENCY RESPONSE FOR A VARIETY OF USERS AND LISTENING ENVIRONMENTS. THEY SHALL HAVE COLOR-CODED SPEAKER OUTPUT TERMINALS AND MUST BE CAPABLE OF RECEIVING ANY OF 40FCC AND INDUSTRY CANADA APPROVED NARROW BAND CHANNEL IN THE 72 TO 76 MHz RANGE. PROVIDE TRANSMITTERS AND RECEIVERS WITH RECHARGEABLE BATTERIES. LISTENING ACCESSORIES AND CHARGING UNITS EQUAL TO 4% OF THE TOTAL SEATING OF ALL CLASSROOMS BUT NO LESS THAN A QUANTITY OF TWO PER CLASSROOM. LA-323 OR LA-325 AS REQUIRED. 25% OF ALL RECEIVERS TO BE HEARING AID COMPATIBLE. LISTENING ACCESSORIES SHALL INCLUDE STANDARD EAR SPEAKERS #LA-164; STETOCLIPS #LA-220; LAVALIER MICROPHONES #LA-261 AND CARRYING CASES #LA-323 OR LA-324 AS REQUIRED. REFER TO ARCHITECTURAL FLOOR PLANS FOR MINIMUM OCCUPANCY SEATING. NUMBER OF TRANSMITTERS SHALL ACCOMMODATE REQUIRED NUMBER OF RECEIVERS.

NORTH

EDUCATION BUILDING POWER AND SIGNAL PLAN

SCALE: 1/8" = 1'-0"

VOLTAGE DROP WORKSHEET: REFERENCE ONLY

1. ALL BRANCH CIRCUITS ARE DESIGNED TO LIMIT VOLTAGE DROP 3% OR LESS USING THE FOLLOWING CRITERIA:

208 VOLT, 1 PHASE LOAD:

LOAD (VA)	DISTANCE	CU CONDUCTOR SIZE
0-1000 VA (500 PER PHASE)	0-225 FT	#12
	226-360 FT	#10
0-4.8 AMPS	361-572 FT	#8
1001-2000 VA (1,000 PER PHASE)	0-151 FT	#12
	152-240 FT	#10
4.8-9.6 AMPS	241-380 FT	#8
	381-604 FT	#6
2001-3,328 VA (1,664 PER PHASE)	0-78 FT	#12
	79-125 FT	#10
9.6-16 AMPS	126-198 FT	#8
3329-4,992 VA (2,496 PER PHASE)	0-52 FT	#12
	53-83 FT	#10
16-24 AMPS	84-132 FT	#8

120 VOLT, 1 PHASE LOAD:

LOAD (VA)	DISTANCE	CU CONDUCTOR SIZE
0-1000 VA	0-130 FT	#12
0-8 AMPS	131-205 FT	#10
	205-330 FT	#8
1001-1500 VA	0-87 FT	#12
8-12.5 AMPS	88-138 FT	#10
	139-219 FT	#8
	220-350 FT	#6
1501-1920 VA	0-68 FT	#12
12.5-16 AMPS	69-108 FT	#10
	109-172 FT	#8
	173-273 FT	#6
1921-2880 VA	0-72 FT	#10
16-24 AMPS	73-114 FT	#8
	115-182 FT	#6

ANY 3 PHASE LOADS GREATER THAN 30 AMPS ARE SHOWN ON THE FEEDER SCHEDULE OR MOTORIZED EQUIPMENT SCHEDULE WITH ASSOCIATED VOLTAGE DROP LIMITED TO 2% OR LESS.

WALL TYPE NOTES

PARTITION SYMBOL

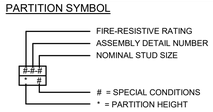

WALL TYPES LEGEND

SEE SHEET G121 FOR ASSEMBLY TYPES

EXTERIOR		
	2 x 6 WOOD STUD WALL - NON RATED	0-W1-6 * #
	2 x 12 WOOD STUD WALL - NON RATED	0-W1-12 * #
INTERIOR		
	2 x 4 WOOD STUD WALL - NON RATED	0-W2-4 * #
	2 x 6 WOOD STUD WALL - NON RATED	0-W2-6 * #
	2 x 8 WOOD STUD WALL - NON RATED	0-W2-8 * #
	2 x 12 WOOD STUD WALL - NON RATED	0-W2-12 * #
	2 x 4 WOOD STUD WALL - ACOUSTIC	0-W5-4 * #
	2 x 6 WOOD STUD WALL - ACOUSTIC	0-W5-6 * #
	2 X 4 WOOD STUD WALL - 1-HR FIRE PARTITION W/ PROTECTED OPENINGS	1-W3-4 * #
	2 X 6 WOOD STUD WALL - 1-HR FIRE PARTITION W/ PROTECTED OPENINGS	1-W3-6 * #

Plot Date: 3/22/2021 9:15:59 AM
File Name: BIM 360://CCC Willits Residential Center/E_CCC Willits_ED_2019-0228A.rvt

IDENTIFICATION STAMP
DIV. OF THE STATE ARCHITECT
APP: 02-118630 INC:
REVIEWED FOR
SS ☐ FLS ☐ ACS ☑
DATE: 04/13/2021

OFFICE OF THE STATE FIRE MARSHAL
APPROVED FIRE AND PANIC ONLY
Approval of this plan does not authorize or approve any omission or deviation from applicable regulations. Final approval is subject to field inspection. One set of approved plans shall be available on the project site at all times.
PERMIT NO.: 28-N 2332-CP
REVIEWED BY: LEO CATALO, OSFM
DATE: 4 / /2021

DGS GENERAL SERVICES
Department of General Services
State of California
Real Estate Services Division
Project Management & Development Branch
707 Third Street, Suite 4-105
West Sacramento, California 95605

NICHOLS MELBURG & ROSSETTO ARCHITECTS + ENGINEERS
300 Knollcrest Drive
Redding, CA. 96002
(530) 222-3300 (530) 222-3538 FAX
http://www.nmrdesign.com

Copyright © 2019
All ideas, designs, arrangements and plans indicated or represented by this drawing are owned by, and the property of, NICHOLS, MELBURG and ROSSETTO and were created, evolved and developed for use on, and in connection with, the specified project. None of such ideas, designs, arrangements or plans shall be used by, or disclosed to any person, firm or corporation for any purpose whatsoever without the written permission of NICHOLS, MELBURG and ROSSETTO.

LICENSE STAMPS

REGISTERED PROFESSIONAL ENGINEER RAYMOND W. SWIFT No. E15610 12/31/2021 ELECTRICAL STATE OF CALIFORNIA
Date Signed: 3/25/2021

CONSULTANT
tk1sc COLLABORATIVE
11870 Pierce Street, Suite 160
Riverside, California 92505
951.299.4160 www.tk1sc.com
Project Leader - Jerry Leonhardt
Electrical Lead - Reid Cordry
tk1sc Job #:2019-0228A

DRAWING STATUS
CONSTRUCTION DOCUMENTS

ISSUE

No.	Date	Description
1	10/20/2020	INITIAL PLAN REVIEW
2	01/22/2021	AGENCY RESUBMITTAL
3	03/22/2021	AGENCY RESUBMITTAL

If drawing is not 30" x 42" it is a reduced print

PROJECT
RESIDENTIAL CENTER, UKIAH: REPLACEMENT OF EXISTING RESIDENTIAL CENTER
440 EAST HILL ROAD
WILLITS, CALIFORNIA 95490
MENDOCINO COUNTY
CALIFORNIA CONSERVATION CORP

Supervisor	Designed	Drawn
		Author

DSA Application No.
XX-XXXXXX

SHEET TITLE
EDUCATION BUILDING POWER AND SIGNAL PLAN

DGS Project Number	NMR Project Number
XXXXX	18-6456

Reference North: NORTH
Sheet Scale: As indicated
Sheet Number: E201E

ISSUE DATE
July 9, 2021

KEYNOTES

2.022 PROVIDE 3/4"C.O.(S) TO RESPECTIVE CONTROL DEVICE(S) FOR CONTROL WIRING. REFER TO THE EQUIPMENT CONTROL WIRING DIAGRAMS FOR ADDITIONAL INFORMATION.

2.023 REFER TO MOTORIZED EQUIPMENT SCHEDULE FOR MOTOR FEEDER/ BRANCH CIRCUIT INFORMATION.

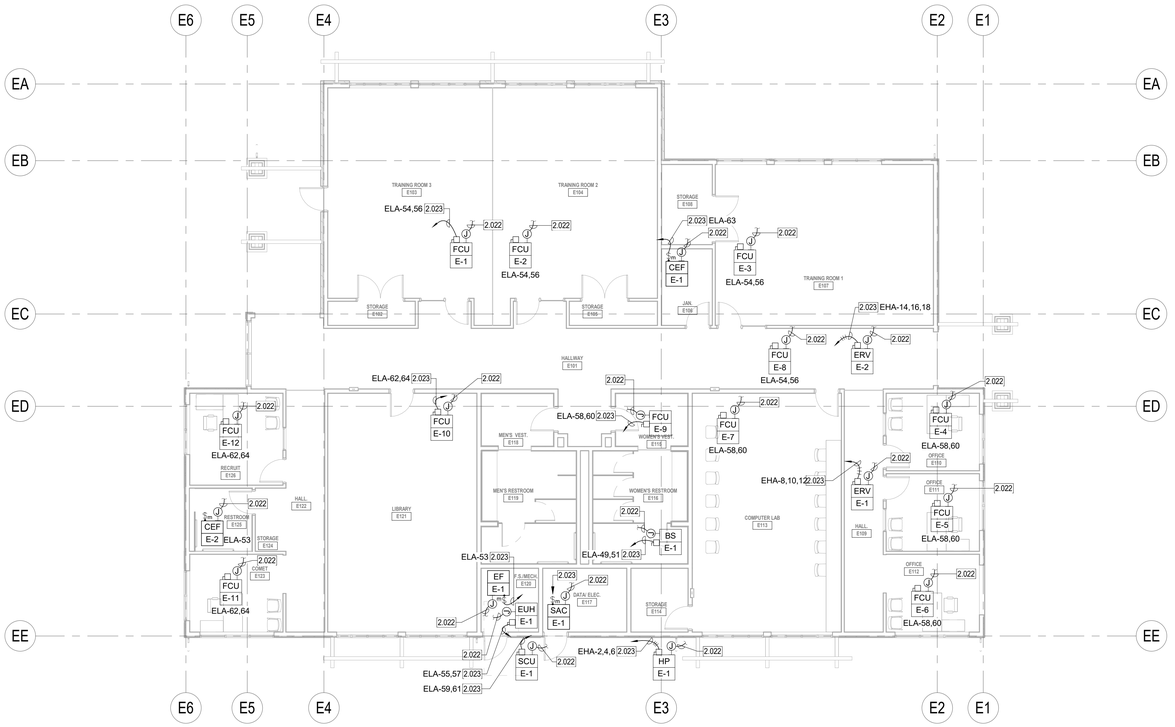

NORTH

EDUCATION BUILDING MECHANICAL POWER PLAN

SCALE: 1/8" = 1'-0"

MOTORIZED EQUIPMENT SCHEDULE

TAG	ITEM	DESCRIPTION	EQUIPMENT RATING VOLTS	PH.	MOTOR HP	MOTOR FLA	VFD FLA	MCA	MOCP	DISC. SW. SIZE STARTER SIZE	CIRCUIT DATA CONDUIT - WIRE	SPECIFIC NOTES
BS	E-1	BRANCH SELECTOR	208	1		1.0		1.2	15 A	30AS	3/4"C. - 2#12, 1#12 GRD.	A
CEF	E-1	EXHAUST FAN	115	1		0.2		0.2	15 A	Motor Rated	3/4"C. - 2#12, 1#12 GRD.	A,C
CEF	E-2	EXHAUST FAN	115	1		0.2		0.2	15 A	Motor Rated	3/4"C. - 2#12, 1#12 GRD.	A,C
EF	E-1	EXHAUST FAN	115	1	.25	5.8		7.3	15 A	Motor Rated	3/4"C. - 2#12, 1#12 GRD.	A,C
ERV	E-1	ENERGY RECOVERY VENTILATOR UNIT	460	3		2.2		2.8	15 A	30AS	3/4"C. - 3#12, 1#12 GRD.	A
ERV	E-2	ENERGY RECOVERY VENTILATOR UNIT	460	3		2.2		2.8	15 A	30AS	3/4"C. - 3#12, 1#12 GRD.	A
EUH	E-1	HEATER UNIT	208	1		12.7		15.9	20 A	30AS	3/4"C. - 2#12, 1#12 GRD.	A
FCU	E-1	FAN COIL UNIT	208	1		2.2		2.8	15 A	30AS	3/4"C. - 2#12, 1#12 GRD.	A
FCU	E-2	FAN COIL UNIT	208	1		2.2		2.8	15 A	30AS	3/4"C. - 2#12, 1#12 GRD.	A
FCU	E-3	FAN COIL UNIT	208	1		2.3		2.9	15 A	30AS	3/4"C. - 2#12, 1#12 GRD.	A
FCU	E-4	FAN COIL UNIT	208	1		0.2		0.3	15 A	30AS	3/4"C. - 2#12, 1#12 GRD.	A
FCU	E-5	FAN COIL UNIT	208	1		0.2		0.3	15 A	30AS	3/4"C. - 2#12, 1#12 GRD.	A
FCU	E-6	FAN COIL UNIT	208	1		0.2		0.3	15 A	30AS	3/4"C. - 2#12, 1#12 GRD.	A
FCU	E-7	FAN COIL UNIT	208	1		2.7		3.4	15 A	30AS	3/4"C. - 2#12, 1#12 GRD.	A
FCU	E-8	FAN COIL UNIT	208	1		1.2		1.5	15 A	30AS	3/4"C. - 2#12, 1#12 GRD.	A
FCU	E-9	FAN COIL UNIT	208	1		1.1		1.4	15 A	30AS	3/4"C. - 2#12, 1#12 GRD.	A
FCU	E-10	FAN COIL UNIT	208	1		1.1		1.4	15 A	30AS	3/4"C. - 2#12, 1#12 GRD.	A
FCU	E-11	FAN COIL UNIT	208	1		0.2		0.3	15 A	30AS	3/4"C. - 2#12, 1#12 GRD.	A
FCU	E-12	FAN COIL UNIT	208	1		0.3		0.4	15 A	30AS	3/4"C. - 2#12, 1#12 GRD.	A
HP	E-1	HEAT PUMP	460	3		16.9		21.1	25 A	30AS	3/4"C. - 3#10, 1#10 GRD.	A
SAC	E-1	SPLIT SYSTEM INDOOR UNIT	208	1		14.6		18.3	20 A	30AS	3/4"C. - 2#12, 1#12 GRD.	A,J
SCU	E-1	SPLIT SYSTEM OUTDOOR UNIT	208	1		14.6		18.3	20 A	30AS	3/4"C. - 2#12, 1#12 GRD.	A

WALL TYPES LEGEND

SEE SHEET G121 FOR ASSEMBLY TYPES

EXTERIOR

- 2 x 6 WOOD STUD WALL - NON RATED — 0-W1-6 * ● #
- 2 x 12 WOOD STUD WALL - NON RATED — 0-W1-12 * ● #

INTERIOR

- 2 x 4 WOOD STUD WALL - NON RATED — 0-W2-4 * ● #
- 2 x 6 WOOD STUD WALL - NON RATED — 0-W2-6 * ● #
- 2 x 8 WOOD STUD WALL - NON RATED — 0-W2-8 * ● #
- 2 x 12 WOOD STUD WALL - NON RATED — 0-W2-12 * ● #
- 2 x 4 WOOD STUD WALL - ACOUSTIC — 0-W5-4 * ● #
- 2 x 6 WOOD STUD WALL - ACOUSTIC — 0-W5-6 * ● #
- 2 X 4 WOOD STUD WALL - 1-HR FIRE PARTITION W/ PROTECTED OPENINGS — 1-W3-4 * ● #
- 2 X 6 WOOD STUD WALL - 1-HR FIRE PARTITION W/ PROTECTED OPENINGS — 1-W3-6 * ● #

WALL TYPE NOTES

PARTITION SYMBOL

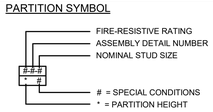

POWER PLAN GENERAL NOTES:

1. ALL RECEPTACLES ON COMMON WALLS SHALL BE SEPARATE BOXES AND OFFSET 24-INCHES MINIMUM.
2. ALL PENETRATIONS THROUGH FIRE RATED WALLS SHALL BE PROTECTED FROM THE SPREAD OF FIRE WITH AN APPROVED FIRESTOP SYSTEM EQUAL OR GREATER THAN THE FIRE RATING OF THE WALL.
3. ALL WALL-MOUNTED DEVICE HEIGHTS SHALL BE VERIFIED WITH THE ARCHITECT PRIOR TO ROUGH-IN.
4. ALL FURNITURE FEED LOCATIONS TO BE VERIFIED WITH ARCHITECT AND FURNITURE VENDOR PRIOR TO ROUGH-IN.
5. ALL FURNITURE WHIPS SHALL BE TRIMMED TO REDUCE EXCESS WHIP LENGTH.
6. WHEN EXPOSED CEILINGS OR OPEN GRID CONDITIONS OCCUR, THE CONTRACTOR WILL NEED TO PROVIDE THE FOLLOWING ITEMS:

   - ALL BRANCH CIRCUITS SHALL BE IN EMT.

   - ALL BRANCH CIRCUITS SHALL BE ROUTED NEATLY AND IN PARALLEL TO STRUCTURES OR DUCT WORK.

   - VISUALLY OBJECTIONABLE BRANCH CIRCUITS SHALL BE REROUTED AT THE REQUEST OF THE ARCHITECT AT NO ADDITIONAL COST.
7. EXPOSED CABLE/CONDUCTORS INSTALLED IN A PLENUM SPACE SHALL CONFORM TO NEC, OR CEC WHERE ADOPTED, ARTICLE 300.22(C).
8. PROVIDE G.F.C.I. TYPE RECEPTACLE(S) OR RECEPTACLE(S) PROTECTED BY A GFCI CIRCUIT BREAKER(S) WHEN LOCATED WITHIN 6 FEET OF ANY SINK OR THERAPEUTIC TUB, LAUNDRY AREA, SERVING ANY DRINKING FOUNTAIN OR VENDING MACHINE, WITHIN ANY KITCHEN SPACE AND/OR LOCATED OUTDOORS. WHERE RECEPTACLES ARE NOT READILY ACCESSIBLE, PROVIDE GFCI CIRCUIT BREAKER(S) TO PROTECT THE RESPECTIVE BRANCH CIRCUIT AND PROVIDE ADDITIONAL NEUTRAL CONDUCTORS IN THE BRANCH CIRCUITING AS REQUIRED TO ENSURE PROPER GFCI FUNCTION
9. PROVIDE OCCUPANCY SENSOR/LIGHTING CONTROL SYSTEM CONTROLLED RECEPTACLE RELAY(S) AS REQUIRED TO SWITCH CONTROLLED RECEPTACLES. CONNECT BRANCH CIRCUITRY AND CONTROL WIRING AS REQUIRED TO ALLOW OCCUPANCY SENSOR/LIGHTING CONTROL SYSTEM RELAY TO SWITCH STANDALONE AND/OR SYSTEMS FURNITURE CONTROLLED RECEPTACLES AS INDICATED ON PLANS. PROVIDE ADDITIONAL CONDUIT, WIRING AND PATHWAYS NECESSARY TO CONNECT BRANCH CIRCUITRY AND CONTROL WIRING TO REMOTE RELAYS TO INCLUDE RELAY(S) LOCATED ON ALTERNATE FLOORS, IN ELECTRICAL ROOMS, ETC.
10. UNLESS SPECIFICALLY SHOWN AS (E), (R), (ER), (D), EXISTING OR NON-BOLD, ALL ELECTRICAL DEVICES SHOWN ARE NEW.
11. PROVIDE REDUNDANT GROUND PATH IN ALL BRANCH CIRCUITS SERVING PATIENT CARE AREAS CONSISTING OF A SEPARATE, INSULATED EQUIPMENT GROUNDING CONDUCTOR PER NEC, OR CEC WHERE ADOPTED, ART 517.13.
12. CONTRACTOR SHALL PROVIDE CONDUIT AND WIRE FOR ALL DEVICES TO PANELBOARD(S) INDICATED ON PLANS FOR A COMPLETE AND OPERABLE SYSTEM.
13. CONTRACTOR SHALL PROVIDE MINIMUM 2#12, 1#12G IN ½" CONDUIT UNLESS OTHERWISE NOTED. REFERENCE WIRE SIZE TABLE CHART ABOVE. WHERE REQUIRED, CONDUIT AND WIRE SHALL BE UPSIZED TO MEET THE REQUIREMENT OF THE DEVICE BEING SERVED BY THE BRANCH CIRCUIT. WHERE CONDUIT AND WIRING IS INDICATED AT THE HOME RUN, WIRING AND CONDUIT SHALL CONTINUE AT THAT SIZE FOR THE ENTIRE LENGTH OF THE CIRCUIT.
14. CONTRACTOR SHALL FURNISH ADDITIONAL SWITCHLEGS OR HOT WIRES AS REQUIRED TO MEET THE CONTROL INTENT OF THE DOCUMENTS AND AS REQUIRED BY CODE (I.E. EMERGENCY LIGHTING AND SWITCHED RECEPTACLES).
15. MULTIPLE CIRCUITS MAY BE USED IN A SINGLE RACEWAY. NO MORE THAN (3) DEDICATED CIRCUITS OR (4) CURRENT CARRYING CONDUCTORS SHALL BE INSTALLED IN ANY RACEWAY UNLESS OTHERWISE NOTED. WHERE A COMMON GROUNDED CONDUCTOR IS USED FOR MULTIPLE INDIVIDUAL BRANCH CIRCUITS, PER SECTIONS CEC 200.4, 250.122, 310.15(B)(2), CONDUIT SIZE SHALL BE INCREASED AS REQUIRED FOR THE CONDUCTORS INCLUDING TEMPERATURE DERATING PER CEC TABLE C1.
16. FURNISH AND INSTALL JUNCTION BOXES AS REQUIRED TO MEET MAXIMUM BEND REQUIREMENTS FOR PULLING WIRES PER CEC 358.26. JUNCTION BOXES SHALL BE SIZED AS REQUIRED PER CEC 314.28 UNLESS OTHERWISE NOTED.

MOTORIZED EQUIPMENT SCHEDULE GENERAL NOTES:

1. ALL BRANCH CIRCUIT DATA IS BASED UPON METALLIC CONDUITS. IF THE CONTRACTOR ELECTS TO USE NONMETALLIC CONDUITS, AN EQUIPMENT GROUNDING CONDUCTOR SHALL BE INSTALLED PER NEC, OR CEC WHERE ADOPTED, TABLE 250.122 AND THE CONDUIT SIZE SHALL BE INCREASED ACCORDINGLY.
2. ELECTRICAL CONTRACTOR SHALL REFER TO ALL DOCUMENTS RELATED TO THE EQUIPMENT (I.E. SHOP DRAWINGS, CONSTRUCTION DOCUMENTS, ETC.) IN REGARDS TO ELECTRICAL CHARACTERISTICS OF ALL EQUIPMENT LISTED IN THE SCHEDULE. ANY MODIFICATION AND/OR ADDITIONAL WORK NECESSARY SHALL BE INCLUDED IN THE BASE BID.
3. ELECTRICAL CONTRACTOR SHALL CHECK THE ROTATION OF ALL THREE PHASE MOTORS AND CORRECT THE ROTATION IF REVERSED.
4. ELECTRICAL CONTRACTOR SHALL PROVIDE FUSES SIZED PER THE EQUIPMENT NAMEPLATE INFORMATION.
5. DISCONNECT SWITCHES SHALL BE HEAVY DUTY TYPE, EXTERNALLY OPERATED, QUICK MAKE QUICK BREAK AND SHALL BE FUSIBLE OR NON FUSIBLE AS INDICATED. A MAXIMUM VOLTAGE, CURRENT AND HORSEPOWER SHALL BE CLEARLY MARKED ON SWITCH ENCLOSURE. SWITCHES HAVING DUAL RATINGS (HIGHER RATINGS WHEN USED WITH DUAL ELEMENT FUSES) SHALL HAVE RATINGS INDICATED ON METAL PLATES RIVETED OR OTHERWISE PERMANENTLY ATTACHED TO THE ENCLOSURE. WHEN INDICATED, TOGGLE SWITCHES SHALL BE MOTOR RATED FOR THE APPLICATION.
6. STARTERS SHALL BE FULL VOLTAGE, REDUCED VOLTAGE OR COMBINATION DISCONNECT AND STARTER, WITH CONTROL VOLTAGE AS REQUIRED, AS INDICATED ON THE DOCUMENTS RELATED TO THE EQUIPMENT, SUCH AS SHOP DRAWINGS, CONSTRUCTION DOCUMENTS, ETC. STARTERS SHALL INCLUDE MOTOR OVERLOAD PROTECTION, PHASE LOSS AND PHASE UNBALANCE PROTECTION AS REQUIRED.
7. ALL TERMINATIONS AND ENCLOSURES SHALL BE RATED FOR USE WITH 75 DEGREE C CONDUCTORS.
8. COMPLETE INSTALLATION SHALL CONFORM TO THE REQUIREMENTS OF NEC (OR CEC WHERE ADOPTED) ARTICLES 430 AND 440.
9. CONTRACTOR TO COORDINATE WITH ALL OTHER PROJECT TRADES AND WITH OWNER/ TENANT FOR TO OBTAIN RESPECTIVE EQUIPMENT SCCR AND PROVIDE APPROPRIATE PROTECTIVE DEVICES TO LIMIT AVAILABLE FAULT CURRENT TO LESS THAN THE EQUIPMENT NAMEPLATE SCCR PER NEC (OR CEC WHERE ADOPTED) 110.10. SEE POWER SYSTEM STUDY SPECIFICATIONS FOR ADDITIONAL REQUIREMENTS.
10. UNLESS OTHERWISE NOTED, MOCP VALUES FOR VFD-EQUIPPED DEVICE ARE SIZED PER NEC (OR CEC WHERE ADOPTED) 430.130(A) 1. CONTRACTOR SHALL COORDINATE WITH ALL OTHER PROJECT TRADES AND WITH OWNER/ TENANT (IF PROVIDING EQUIPMENT ON PROJECT) TO OBTAIN NAMEPLATE VFD-EQUIPPED DEVICE MOCP VALUE FROM MANUFACTURER INSTALLATION INSTRUCTIONS AND PROVIDE APPROPRIATE PROTECTIVE DEVICES TO COMPLY WITH NEC (OR CEC WHERE ADOPTED) 430.130(A).2.

MOTORIZED EQUIPMENT SCHEDULE SPECIFIC NOTES:

A. FUSED AS RECOMMENDED BY MANUFACTURER.

B. MAGNETIC MOTOR STARTER WITH CONTROL TRANSFORMER, AUXILIARY CONTACTS, INDICATOR LIGHT AND H.O.A. SWITCH. VERIFY CONTROL TRANSFORMER VOLTAGE WITH M.C. PRIOR TO ORDERING MATERIAL.

C. ROUTE THROUGH LINE VOLTAGE CONTROL. SEE MECHANICAL AND/OR PLUMBING PLANS FOR ADDITIONAL REQUIREMENTS.

D. VERIFY LOCATION WITH PLUMBING PLANS PRIOR TO ROUGH-IN. CONNECT TO AQUASTAT AND TIME CLOCK AS REQUIRED.

E. REMOTE VFD. PROVIDE EARLY BREAK CONTACTS ON ANY DISCONNECT SWITCHES REQUIRED BY CODE OR SHOWN ON PLANS THAT ARE DOWNSTREAM OF THE REMOTE VFD. PROVIDE CONDUIT AND CONDUCTORS AS REQUIRED TO INTERCONNECT THE CONTACT WITH VFD "ENABLE" TERMINALS. REFER TO MECHANICAL AND/OR PLUMBING PLANS FOR LOCATION. PROVIDE FEEDER(S) TO CONNECT REMOTE VFD AND MOTOR(S) AS REQUIRED.

F. INTEGRAL VFD PROVIDED WITH EQUIPMENT. REFER TO MECHANICAL AND/OR PLUMBING PLANS FOR LOCATION. CONNECT TO VFD AS REQUIRED.

G. INTEGRAL DISCONNECT PROVIDED WITH EQUIPMENT. REFER TO MECHANICAL AND/OR PLUMBING PLANS FOR LOCATION. CONNECT TO INTEGRAL DISCONNECT AS REQUIRED.

H. INTEGRAL DISCONNECT PROVIDED WITH VFD. REFER TO MECHANICAL AND/OR PLUMBING PLANS FOR LOCATION. CONNECT TO INTEGRAL DISCONNECT AS REQUIRED.

J. INDOOR UNIT POWERED FROM RESPECTIVE OUTDOOR UNIT. PROVIDE POWER AND CONTROL WIRING AS REQUIRED.

K. ROUTE THROUGH LINE VOLTAGE CONTROL FOR KITCHEN HOOD FIRE SUPPRESSION SYSTEM. SEE MECHANICAL, FIRE ALARM AND FOOD SERVICE PLANS FOR ADDITIONAL REQUIREMENTS.

IDENTIFICATION STAMP
DIV. OF THE STATE ARCHITECT
APP: 02-118630 INC:
REVIEWED FOR
SS ☐ FLS ☐ ACS ☑
DATE: 04/13/2021

OFFICE OF THE STATE FIRE MARSHAL
APPROVED FIRE AND PANIC ONLY
Approval of this plan does not authorize or approve any omission or deviation from applicable regulations. Final approval is subject to field inspection. One set of approved plans shall be available on the project site at all times.
PERMIT NO.: 28 N 2332 CP
REVIEWED BY: LEO CATALLO, OSFM
DATE: 4/1/2021

DGS GENERAL SERVICES
Department of General Services
State of California
Real Estate Services Division
Project Management & Development Branch
707 Third Street, Suite 4-105
West Sacramento, California 95605

NICHOLS MELBURG & ROSSETTO ARCHITECTS + ENGINEERS
300 Knollcrest Drive
Redding, CA. 96002
(530) 222-3300 (530) 222-3538 FAX
http://www.nmrdesign.com

Copyright © 2019
All ideas, designs, arrangements and plans indicated or represented by this drawing are owned by, and the property of, NICHOLS, MELBURG and ROSSETTO and were created, evolved and developed for use on, and in connection with, the specified project. None of such ideas, designs, arrangements or plans shall be used by, or disclosed to, any person, firm or corporation for any purpose whatsoever without the written permission of NICHOLS, MELBURG and ROSSETTO.

LICENSE STAMPS

REGISTERED PROFESSIONAL ENGINEER RAYMOND W. SINGLETON No. E15610 12/31/2021 ELECTRICAL STATE OF CALIFORNIA
Date Signed: 3/25/2021

CONSULTANT
tklsc COLLABORATIVE
11870 Pierce Street, Suite 160
Riverside, California 92505
951.299.4160 www.tklsc.com
Project Leader - Jerry Leonhardt
Electrical Lead - Reid Cordry
tk1sc Job #:2019-0228A

DRAWING STATUS
CONSTRUCTION DOCUMENTS

ISSUE

No.	Date	Description
1	10/20/2020	INITIAL PLAN REVIEW
2	01/22/2021	AGENCY RESUBMITTAL
3	03/22/2021	AGENCY RESUBMITTAL

If drawing is not 30" x 42" it is a reduced print

PROJECT
RESIDENTIAL CENTER, UKIAH: REPLACEMENT OF EXISTING RESIDENTIAL CENTER
440 EAST HILL ROAD
WILLITS, CALIFORNIA 95490
MENDOCINO COUNTY
CALIFORNIA CONSERVATION CORP

Supervisor	Designed	Drawn
		Author

DSA Application No.
XX-XXXXXX

SHEET TITLE
EDUCATION BUILDING MECHANICAL POWER PLAN

DGS Project Number	NMR Project Number
XXXXX	18-6456

Reference North: NORTH
Sheet Scale: As indicated
Sheet Number: E301E

ISSUE DATE
July 9, 2021

Plot Date: 3/23/2021 4:03:30 PM
File Name: BIM 360://CCC Willits Residential Center/E_CCC Willits_ED_2019-0228A.rvt

PANEL: ELA

MOUNTING: Surface **DOUBLE-LUGS:** No **VOLTS:** 120/208 Wye **SUPPLY FROM:** TE
NEMA 3R: No **200% NEUTRAL:** No **PHASE:** 3 **LOCATION:** DATA/ ELEC. E117
FEED THRU: No **I/G BUS:** No **WIRE:** 4 **MCB:** 225A-3P
M.L.O.: No **AIC:** 10,000 **BUS:** 225A

NOTE	DESCRIPTION	BKR	POLE	TYPE	CIRC	A	B	C	CIRC	TYPE	POLE	BKR	DESCRIPTION	NOTE
	R RECRUIT E126	20 A	1	R	1	720 720			2	R	1	20 A	R COMPUTER LAB E113	
	R Room E101, E123	20 A	1	R	3		720 360		4	R	1	20 A	R COMPUTER LAB E113	
	R Room E122, E101, E123	20 A	1	R	5			900 540	6	R	1	20 A	R COMPUTER LAB E113	
	R LIBRARY E121	20 A	1	R	7	720 720			8	R	1	20 A	R EXTERIOR	
	R LIBRARY E121	20 A	1	R	9		720 540		10	R	1	20 A	R OFFICE E110	
	R Room E118, E115, E119, E116	20 A	1	R	11			540 540	12	R	1	20 A	R OFFICE E111	
	R HALLWAY E101	20 A	1	R	13	180 540			14	R	1	20 A	R OFFICE E112	
	R F.S./MECH. E120	20 A	1	R	15		180 900		16	R	1	20 A	R Room E102, E103, E104	
	R DATA/ ELEC. E117	20 A	1	R	17			360 720	18	R	1	20 A	R Room E104, E103	
	R COMPUTER LAB E113	20 A	1	R	19	720 540			20	R	1	20 A	R Room E108, E106, E105	
	R COMPUTER LAB E113	20 A	1	R	21		900 540		22	R	1	20 A	R TRAINING ROOM 1 E107	
	R COMPUTER LAB E113	20 A	1	R	23			720 900	24	R	1	20 A	R TRAINING ROOM 1 E107	
	R STORAGE E114	20 A	1	R	25	180 1000			26	P	1	20 A	P WOMEN'S RESTROOM E116	
	P MEN'S RESTROOM E119	20 A	1	P	27		1000 1000		28	P	1	20 A	P WOMEN'S RESTROOM E116	
	P MEN'S RESTROOM E119	20 A	1	P	29			1000 360	30	P	1	20 A	P SITE RECEPTACLES	
	P F.S./MECH. E120 EWH	90 A	2	P	31	7000 360			32	P	1	20 A	P SITE RECEPTACLES	
--	--	--	--	--	33		7000 1000		34	R	1	30 A	R DATA/ ELEC. E117	
	FCU LIGHTS	20 A	1	L;R	35			965 0	36	--	1	20 A	SPARE	
	FCU LIGHTS	20 A	1	L;R	37	772 0			38	--	1	20 A	SPARE	
	FCU LIGHTS	20 A	1	L;R	39		579 0		40	--	1	20 A	SPARE	
	SPARE	20 A	1	--	41			0 0	42	--	1	20 A	SPARE	
	M BS E-1	15 A	2	M	49	105 0			50	--	1	20 A	SPARE	
--	--	--	--	--	51		105 0		52	--	1	20 A	SPARE	
	M EF E-1	15 A	1	M	53			690 825	54	M	2	20 A	M FCU E-1, E-2, E-3, E-8	
	M EUH E-1	20 A	2	M	55	1320 825			56	--	--	--	--	--
--	--	--	--	--	57		1320 455		58	M	2	20 A	M FCU E-4, E-5, E-6, E-7, E-9	
	M SCU E-1	20 A	2	M	59			1520 455	60	--	--	--	--	--
--	--	--	--	--	61	1520 165			62	M	2	20 A	M FCU E-10, E-11, E-12	
	M JAN. E106 CEF E-1	20 A	1	M	63		20 165		64	--	--	--	--	--
	SPARE	20 A	1	--	65			0 0	66	--	1	20 A	SPARE	
		PHASE TOTALS:				18107.00 VA	17504.00 VA	11035.00 VA						
COMMENTS:						159.2 A	154.2 A	92.0 A						

LOAD TYPE KEY	LOAD CLASSIFICATION	CONNECTED LOAD	AVG. DEMAND...	ESTIMATED DEMAND	PANEL TOTALS	AMPS	KVA
H = HVAC EQUIP	P	18.72 kVA	100.00%	18.72 kVA			
K = KITCHEN	R	18.28 kVA	77.35%	14.14 kVA	TOTAL CONNECTED LOAD:	129.5 A	46.65 kVA
L = LIGHTING	L	0.16 kVA	125.00%	0.20 kVA	TOTAL DEMAND LOAD:	120.2 A	43.31 kVA
M = MOTOR	M	9.49 kVA	108.01%	10.25 kVA	HIGH PHASE:	159 A	18.11 kVA
P = POWER							
R = RECEPTACLE							
W = WATER HEATER							

PANEL: EHA

MOUNTING: Surface **DOUBLE-LUGS:** No **VOLTS:** 480/277 Wye **SUPPLY FROM:** MSA
NEMA 3R: No **200% NEUTRAL:** No **PHASE:** 3 **LOCATION:** DATA/ ELEC. E117
FEED THRU: No **I/G BUS:** No **WIRE:** 4 **MCB:** 225A-3P
M.L.O.: No **AIC:** 10,000 **BUS:** 225A

NOTE	DESCRIPTION	BKR	POLE	TYPE	CIRC	A (VA)	B (VA)	C (VA)	CIRC	TYPE	POLE	BKR	DESCRIPTION	NOTE
H	L SITE LIGHTING	20 A	1	L	1	560 4487			2	M	3	15 A	M HP E-1	
H	L EXTERIOR	20 A	1	L	3		294 4487		4	--	--	--	--	--
	L Room E103, E104, E105, E102, E101	20 A	1	L	5			846 4487	6	--	--	--	--	--
	COURT LIGHTING	20 A	1	L	7	300 583			8	M	3	15 A	M ERV E-1	
	L Room E108, E106, E101, E107	20 A	1	L	9		820 583		10	--	--	--	--	--
	L Room E118, E119, E117, E120, E121, E122, E123,...	20 A	1	L	11			1050 583	12	--	--	--	--	--
	L Room E115, E116, E114, E113, E109, E110, E111,...	20 A	1	L	13	1069 583			14	M	3	15 A	M ERV E-2	
	SPARE	20 A	1	--	15		0 583		16	--	--	--	--	--
	SPARE	20 A	1	--	17			0 583	18	--	--	--	--	--
	SPARE	20 A	1	--	19	0 0			20	--	1	20 A	SPARE	
	SPARE	20 A	1	--	21		0 0		22	--	1	20 A	SPARE	
	SPARE	20 A	1	--	23			0 0	24	--	1	20 A	SPARE	
	SPARE	20 A	1	--	25	0 0			26	--	1	20 A	SPARE	
	SPARE	20 A	1	--	27		0 0		28	--	1	20 A	SPARE	
	SPARE	20 A	1	--	29			0 0	30	--	1	20 A	SPARE	
	SPARE	20 A	1	--	31	0 0			32	--	1	20 A	SPARE	
	SPARE	20 A	1	--	33		0 0		34	--	1	20 A	SPARE	
	SPARE	20 A	1	--	35			0 0	36	--	1	20 A	SPARE	
--	SPACE	--	--	--	37	0 18107			38	L; ..	3	100 A	TRANSFORMER TE	
--	SPACE	--	--	--	39		0 17504		40	--	--	--	--	--
--	SPACE	--	--	--	41			0 11035	42	--	--	--	--	--
		PHASE TOTALS:				25689.73 VA	24271.13 VA	18584.53 VA						
COMMENTS:						95.9 A	90.8 A	67.1 A						

LOAD TYPE KEY	LOAD CLASSIFICATION	CONNECTED LOAD	AVG. DEMAND...	ESTIMATED DEMAND	PANEL TOTALS	AMPS	KVA
H = HVAC EQUIP	P	18.72 kVA	100.00%	18.72 kVA			
K = KITCHEN	R	18.28 kVA	77.35%	14.14 kVA	TOTAL CONNECTED LOAD:	82.4 A	68.55 kVA
L = LIGHTING	L	5.10 kVA	125.00%	6.37 kVA	TOTAL DEMAND LOAD:	83.0 A	69.04 kVA
M = MOTOR	M	26.45 kVA	112.72%	29.82 kVA	HIGH PHASE:	96 A	25.69 kVA
P = POWER							
R = RECEPTACLE							
W = WATER HEATER							

PANEL SCHEDULE GENERAL NOTES:

1. WHERE PANEL IS INDICATED TO INCLUDE FEED THRU LUGS, PROVIDE FEED THROUGH LUGS AT THE OPPOSITE END OF THE PANELBOARD FROM THE PANELBOARD MAIN LUGS.
2. WHERE PANEL IS INDICATED TO INCLUDE DOUBLE LUGS, PROVIDE A DOUBLE LUG KIT AT THE SAME END OF THE PANELBOARD AS THE PANELBOARD MAIN LUGS.
3. WHERE PANEL IS INDICATED TO INCLUDE 200% NEUTRAL, PROVIDE PANELBOARDS UL LISTED AS HAVING NEUTRAL BUSSES RATED TO CARRY 200 PERCENT OF THE CURRENT CARRYING CAPACITY OF THE PHASE BUSSING. OTHERWISE, NEUTRAL BUSSING TO BE FULL SIZE AND RECTANGULAR.
4. WHERE PANEL IS INDICATED TO INCLUDE AN I/G BUS, PROVIDE PANELBOARDS WITH AN ISOLATED GROUND BUS, DRILLED AND TAPPED FOR NUMBER OF ISOLATED GROUND CONDUCTORS SHOWN, AS WELL AS FOR ALL SPARES AND SPACES SHOWN ON THE PANELBOARD.
5. WHERE PANEL CIRCUIT BREAKER RATING IS SHOWN AS SERIES RATED, PROVIDE CIRCUIT BREAKERS IN PANELBOARD WHICH ARE SERIES RATED WITH THE UPSTREAM SYSTEM FOR THE AVAILABLE FAULT CURRENT. THE PANELBOARD SHALL BE MARKED WITH THE SERIES CONNECTED RATINGS, AS WELL AS ALL MARKING AS REQUIRED BY THE NEC, OR CEC WHERE ADOPTED, 240-83(C).
6. WHERE PANEL IS INDICATED AS RECESSED OR FLUSH MOUNTED, PROVIDE SPARE CONDUITS STUBBED UP INTO THE ACCESSIBLE CEILING SPACE. PROVIDE ONE (1) 3/4" CONDUIT ONLY FOR EACH THREE (3) SPARES OR SPACES, MINIMUM OF TWO (2). EACH CONDUIT SHALL BE TAGGED, CAPPED AND MARKED FOR FUTURE USE.
7. ALL BUSSING SHALL BE TIN PLATED ALUMINUM.
8. ALL CIRCUIT BREAKERS USED AS SWITCHES SHALL BE UL LISTED AND LABELED "SWD" FOR SWITCHING DUTY.
9. PROVIDE BREAKER INTERLOCK WITH ADJACENT BREAKER(S) FOR ANY MULTI-WIRE BRANCH CIRCUIT. BREAKER INTERLOCK GROUPING SHALL BE BY BRANCH CIRCUIT GROUP (i.e. MULTIPLE CIRCUITS SHARING A COMMON NEUTRAL (NEC, OR CEC WHERE ADOPTED, 210.4 (B).) COMMON YOKE (NEC, OR CEC WHERE ADOPTED, 210.7(B) ,) OR FURNITURE SYSTEM NEC OR CEC WHERE ADOPTED, 605.6 AND 605.7). WHERE AN EXISTING PANEL IS BEING ALTERED OR MODIFIED IN ANY WAY, CONTRACTOR SHALL INCLUDE ALL COSTS IN BASE BID TO ADD BREAKER INTERLOCKS TO EXISTING MULTI-WIRE BRANCH CIRCUITS BASED ON CONTRACTOR'S INVESTIGATION OF EXISTING CONDITIONS.
10. PROVIDE BREAKER LOCK OFF DEVICE ON ANY CIRCUIT BREAKER FEEDING A TRANSFORMER AS REQUIRED, PER NEC, OR CEC WHERE ADOPTED, 450.14. WHERE AN EXISTING PANEL IS BEING ALTERED OR MODIFIED IN ANY WAY, CONTRACTOR SHALL INCLUDE ALL COSTS IN BASE BID TO ADD BREAKER LOCK-OFF DEVICES TO EXISTING TRANSFORMER CIRCUIT BREAKERS BASED ON CONTRACTOR'S INVESTIGATION OF EXISTING CONDITIONS.
11. ALL CIRCUIT BREAKERS SHALL BE BOLT-ON TYPE AND SHALL BE SUITABLE FOR 75 DEGREE AMPACITY CONDUCTORS.
12. PANELS SHALL BE OF THE DEAD FRONT SAFETY TYPE. PANELS SHALL BE MINIMUM 20" WIDE AND 5-3/4" DEEP UNLESS OTHERWISE NOTED ON PLAN.
13. COORDINATE WITH APPLICABLE TRADE TO INSURE RECESSED MOUNTED PANELBOARDS WILL SEAT FLUSH IN THE WALLS PROVIDED. PANEL TRIMS SHALL HAVE CONCEALED DOORS AND FASTENERS WITH FLUSH TYPE COMBINATION LOCK AND CATCH, TWO MILLED TYPE KEYS SUPPLIED WITH EACH PANEL. ALL LOCKS SHALL BE KEYED ALIKE AND EACH DOOR SHALL HAVE A PLASTIC COVERED DIRECTORY FRAME WITH A TYPED IDENTIFICATION CARD OF ALL CIRCUIT AND PANEL NUMBERS FOR BRANCH CIRCUIT PANELBOARDS.
14. UPON PROJECT COMPLETION, CONTRACTOR SHALL INSTALL TYPED AS-BUILT PANEL DIRECTORIES IN EACH PANEL WITHIN THE MFGR.-PROVIDED DIRECTORY HOLDER. THE DIRECTORY SHALL CLEARLY IDENTIFY EACH CIRCUIT TO ITS CLEAR, EVIDENT, AND SPECIFIC PURPOSE OR USE. EACH CIRCUIT IDENTITY SHALL INCLUDE SUFFICIENT DETAIL TO ALLOW EACH CIRCUIT TO BE DISTINGUISHED FROM ALL OTHERS PER NEC, OR CEC WHERE ADOPTED, ART 408.1 AND 408.4 . HANDWRITTEN DIRECTORIES ARE UNACCEPTABLE COPIES OF AS-BUILT PANEL SCHEDULES SHALL BE PLACED IN PANEL DIRECTORIES. E.C. TO INCLUDE ALL COSTS REQUIRED FOR LARGER-THAN-STANDARD CUSTOM PANEL DIRECTORY HOLDERS TO ACCOMMODATE COPIES OF AS-BUILT PANEL SCHEDULES.
15. PANELBOARDS SHALL BE MANUFACTURED BY G.E., CUTLER-HAMMER, SIEMENS, OR SQUARE "D". FUSED PANEL BOARDS SHALL BE BY COOPER BUSSMANN.
16. PROVIDE SHOP DRAWING SUBMITTAL PER THE ELECTRICAL SPECIFICATION SUBMITTAL REQUIREMENTS FOR EACH PANEL DEPICTING CONFORMANCE WITH THE ABOVE NOTES AND SCHEDULES.

SPECIFIC PANEL SCHEDULE NOTES:

"A" PROVIDE LOCK-ON DEVICE.

"B" PROVIDE LOCK-OFF DEVICE.

"C" PROVIDE SHUNT TRIP DEVICE.

"D" PROVIDE GFCI TYPE DEVICE.

"E" PROVIDE A RED CIRCUIT BREAKER.

"F" PROVIDE A NEW BREAKER TO MATCH THE EXISTING IN PANEL.

"G" EXISTING BREAKER WITH NEW LOAD.

"H" PROVIDE RELAY AS REQUIRED FOR CONTROL OF EXTERIOR LIGHTING BY PHOTOCELL ON / TIMECLOCK OFF. MOUNT RELAY IN SEPARATE BARRIERED COMPARTMENT OF PANELBOARD.

PANEL SCHEDULE INDEX		
XXXX	ELA	EHA
XXXX	XXXX	XXXX
XXXX	XXXX	XXXX

Plot Date: 3/22/2021 4:03:33 PM
File Name: BIM 360://CCC Willits Residential Center/E_CCC Willits_ED_2019-0228A.rvt

IDENTIFICATION STAMP
DIV. OF THE STATE ARCHITECT
APP: 02-118630 INC:
REVIEWED FOR
SS ☐ FLS ☐ ACS ☑
DATE: 04/13/2021

OFFICE OF THE STATE FIRE MARSHAL
APPROVED FIRE AND PANIC ONLY
Approval of this plan does not authorize or approve any omission or deviation from applicable regulations. Final approval is subject to field inspection. One set of approved plans shall be available on the project site at all times.
PERMIT NO: 20 N 2332 CP
REVIEWED BY: LEO CATALLO, OSFM
DATE: 4 / 1 /2021

GENERAL SERVICES
Department of General Services
State of California
Real Estate Services Division
Project Management & Development Branch
707 Third Street, Suite 4-105
West Sacramento, California 95605

NICHOLS MELBURG & ROSSETTO
ARCHITECTS + ENGINEERS
300 Knollcrest Drive
Redding, CA. 96002
(530) 222-3300 (530) 222-3538 FAX
http://www.nmrdesign.com

Copyright © 2019
All ideas, designs, arrangements and plans indicated or represented by this drawing are owned by, and the property of, NICHOLS, MELBURG and ROSSETTO and were created, evolved and developed for use on, and in connection with, the specified project. None of such ideas, designs, arrangements or plans shall be used by, or disclosed to any person, firm or corporation for any purpose whatsoever without the written permission of NICHOLS, MELBURG and ROSSETTO.

LICENSE STAMPS

REGISTERED PROFESSIONAL ENGINEER RAYMOND W. SWEETEN No. E15610 12/31/2021 ELECTRICAL STATE OF CALIFORNIA
Date Signed: 3/25/2021

CONSULTANT

tk1sc COLLABORATIVE
11870 Pierce Street, Suite 160
Riverside, California 92505
951.299.4160 www.tk1sc.com
Project Leader - Jerry Leonhardt
Electrical Lead - Reid Cordry
tk1sc Job #:2019-0228A

DRAWING STATUS
CONSTRUCTION DOCUMENTS

ISSUE

No.	Date	Description
1	10/20/2020	INITIAL PLAN REVIEW
2	01/22/2021	AGENCY RESUBMITTAL
3	03/22/2021	AGENCY RESUBMITTAL

If drawing is not 30" x 42" it is a reduced print

PROJECT
RESIDENTIAL CENTER, UKIAH: REPLACEMENT OF EXISTING RESIDENTIAL CENTER
440 EAST HILL ROAD
WILLITS, CALIFORNIA 95490
MENDOCINO COUNTY
CALIFORNIA CONSERVATION CORP

Supervisor	Designed	Drawn
		Author

DSA Application No.
XX-XXXXXX

SHEET TITLE
EDUCATION BUILDING PANEL SCHEDULES

DGS Project Number	NMR Project Number
XXXXX	18-6456

Reference North: NORTH
Sheet Scale: 12" = 1'-0"
Sheet Number: E407E

ISSUE DATE
July 9, 2021

STATE OF CALIFORNIA
Indoor Lighting
NRCC-LTI-E
CALIFORNIA ENERGY COMMISSION

CERTIFICATE OF COMPLIANCE			**NRCC-LTI-E**
Project Name:	Replacement of Existing Residential Center	**Report Page:**	**(Page 6 of 7)**
Project Address:	440 East Hill Road	**Date Prepared:**	10/20/2020

T. DECLARATION OF REQUIRED CERTIFICATES OF INSTALLATION

Selections have been made based on information provided in this document. If any selection have been changed by permit applicant, an explanation should be included in Table E. Additional Remarks. These documents must be provided to the building inspector during construction and can be found online at https://www.energy.ca.gov/title24/2019standards/2019_compliance_documents/Nonresidential_Documents/NRCI/

Yes	No	Form/Title	Field Inspector Pass	Fail
●	○	NRCI-LTI-01-E - Must be submitted for all buildings	☐	☐
○	●	NRCI-LTI-02-E- Must be submitted for a lighting control system, or for an Energy Management Control System (EMCS), to be recognized for compliance.	☐	☐
○	●	NRCI-LTI-04-E - Must be submitted for two interlocked systems serving an auditorium, a convention center, a conference room, a multipurpose room or a theater to be recognized for compliance.	☐	☐
○	●	NRCI-LTI-05-E- Must be submitted for a Power Adjustment Factor (PAF) to be recognized for compliance.	☐	☐
○	●	NRCI-LTI-06-E- Must be submitted for additional wattage installed in a video conferencing studio to be recognized for compliance.	☐	☐

U. DECLARATION OF REQUIRED CERTIFICATES OF ACCEPTANCE

Selections have been made based on information provided in this document. If any selection have been changed by the permit applicant, an explanation should be included in Table E. Additional Remarks. These documents must be provided to the building inspector during construction and any with "-A" in the form name must be completed through an Acceptance Test Technician Certification Provider (ATTCP). For more information visit: http://www.energy.ca.gov/title24/attcp/providers.html

Yes	No	Form/Title	Field Inspector Pass	Fail
●	○	NRCA-LTI-02-A - Must be submitted for occupancy sensors and automatic time switch controls.	☐	☐
○	●	NRCA-LTI-03-A - Must be submitted for automatic daylight controls.	☐	☐
●	○	NRCA-LTI-04-A - Must be submitted for demand responsive lighting controls.	☐	☐
○	●	NRCA-LTI-05-A - Must be submitted for institutional tuning power adjustment factor (PAF)	☐	☐

Registration Number: | Registration Date/Time: | Registration Provider: EnergySoft
CA Building Energy Efficiency Standards - 2019 Nonresidential Compliance | Report Version: 2019.0.001 Schema Version: rev 20190401 | Report Generated: 2020-10-20 09:10:38

STATE OF CALIFORNIA
Indoor Lighting
NRCC-LTI-E
CALIFORNIA ENERGY COMMISSION

CERTIFICATE OF COMPLIANCE			**NRCC-LTI-E**
Project Name:	Replacement of Existing Residential Center	**Report Page:**	**(Page 3 of 7)**
Project Address:	440 East Hill Road	**Date Prepared:**	10/20/2020

F. INDOOR LIGHTING FIXTURE SCHEDULE

1	3 - LED Sctiplight 4'	No	No	16	JA8 Lamp	5	No	80	☐	☐
5	5 - 1x4 Recessed LED	No	No	29.8	JA8 Lamp	3	No	89.4	☐	☐
9	9 - Recessed LED Downlight	No	No	10.9	JA8 Lamp	19	No	207.1	☐	☐
							Total Designed Watts: CONDITIONED SPACES		2,690.9	

[1]FOOTNOTE: Design Watts for small aperture and color changing luminaires which qualify per §140.6(a)4B is adjusted to be 75% of their rated wattage. Table F automatically makes this adjustment, the permit applicant should enter full rated wattage in column 05.

G. MODULAR LIGHTING SYSTEMS

This section does not apply to this project.

H. INDOOR LIGHTING CONTROLS (Not including PAFs)

*This table includes lighting controls for conditioned and unconditioned spaces. When an control having a * is shown, the notes section of this table provides more detail on how compliance is achieved. The lighting controls section of the Compliance Summary Table on the first page will show "DOES NOT COMPLY" if the notes are left blank.*

Building Level Controls

01	02	03	
Mandatory Demand Response §110.12(c)	Shut-off controls §130.1(c)	Field Inspector Pass	Fail
Required 10,000 SF	Whole Building Auto Time Switch	☐	☐

Area Level Controls

04	05	06	07	08	09	10	11	12	
Area Description	Complete Building or Area Category Primary Function Area	Area Controls §130.1(a)	Multi-Level Controls §130.1(b)	Shut-Off Controls §130.1(c)	Primary/Sky lit Daylighting §130.1(d)	Secondary Daylighting §140.6(d)	Interlocked Systems §140.6(a)1	Field Inspector Pass	Fail
								☐	☐

*NOTES: Controls with a * require a note in the space below explaining how compliance is achieved.*
EX: Conference 1: Primary/Skylight Daylighting: Exempt because less than 120 watts of general lighting; EXCEPTION 1 to §130.1(d)2

13
Plan Sheet Showing Daylit Zones:

Registration Number: | Registration Date/Time: | Registration Provider: EnergySoft
CA Building Energy Efficiency Standards - 2019 Nonresidential Compliance | Report Version: 2019.0.001 Schema Version: rev 20190401 | Report Generated: 2020-10-20 09:10:38

STATE OF CALIFORNIA
Indoor Lighting
NRCC-LTI-E
CALIFORNIA ENERGY COMMISSION

CERTIFICATE OF COMPLIANCE			**NRCC-LTI-E**
Project Name:	Replacement of Existing Residential Center	**Report Page:**	**(Page 1 of 7)**
Project Address:	440 East Hill Road	**Date Prepared:**	10/20/2020

This document is used to demonstrate compliance with requirements in §110.9, §110.12(c), §130.0, §130.1, §140.6 and §141.0(b)2 for indoor lighting scopes using the prescriptive path.

A. GENERAL INFORMATION

01	Project Location (city)	Willits		04	Total Conditioned Floor Area (ft²)	5,717	
02	Climate Zone	2		05	Total Unconditioned Floor Area (ft²)	0	
03	Occupancy Types Within Project (select all that apply):			06	# of Stories (Habitable Above Grade)	1	
☒ Office	☐ Retail	☐ Warehouse	☐ Hotel/Motel	☐ School	☒ Support Areas		
☐ Parking Garage	☐ High-Rise Residential	☐ Relocatable	☐ Healthcare	☒ Other (Write in)	See Table I		

B. PROJECT SCOPE

This table includes any lighting systems that are within the scope of the permit application and are demonstrating compliance using the prescriptive path outlined in §140.6 or §141.0(b)2 for alterations.

Scope of Work	Conditioned Spaces		Unconditioned Spaces	
01	02	03	04	05
My Project Consists of (check all that apply):	Calculation Method	Area (ft²)	Calculation Method	Area (ft²)
☒ New Lighting System	Area Category Method	5717	Area Category Method	0
☐ New Lighting System - Parking Garage				
☐ Altered Lighting System				
Total Area of Work (ft²)	5717		0	

Registration Number: | Registration Date/Time: | Registration Provider: EnergySoft
CA Building Energy Efficiency Standards - 2019 Nonresidential Compliance | Report Version: 2019.0.001 Schema Version: rev 20190401 | Report Generated: 2020-10-20 09:10:38

STATE OF CALIFORNIA
Indoor Lighting
NRCC-LTI-E
CALIFORNIA ENERGY COMMISSION

CERTIFICATE OF COMPLIANCE			**NRCC-LTI-E**
Project Name:	Replacement of Existing Residential Center	**Report Page:**	**(Page 7 of 7)**
Project Address:	440 East Hill Road	**Date Prepared:**	10/20/2020

DOCUMENTATION AUTHOR'S DECLARATION STATEMENT

Documentation Author Name: Ray Swartz	Documentation Author Signature:
Company: tk1sc	Signature Date: 2020-10-20
Address: 11870 Pierce Street, Suite 160	CEA/ HERS Certification Identification (if applicable):
City/State/Zip: Riverside CA 92505	Phone: 951-299-4160

RESPONSIBLE PERSON'S DECLARATION STATEMENT

I certify the following under penalty of perjury, under the laws of the State of California:

1. The information provided on this Certificate of Compliance is true and correct.
2. I am eligible under Division 3 of the Business and Professions Code to accept responsibility for the building design or system design identified on this Certificate of Compliance (responsible designer)
3. The energy features and performance specifications, materials, components, and manufactured devices for the building design or system design identified on this Certificate of Compliance conform to the requirements of Title 24, Part 1 and Part 6 of the California Code of Regulations.
4. The building design features or system design features identified on this Certificate of Compliance are consistent with the information provided on other applicable compliance documents, worksheets, calculations, plans and specifications submitted to the enforcement agency for approval with this building permit application.
5. I will ensure that a completed signed copy of this Certificate of Compliance shall be made available with the building permit(s) issued for the building, and made available to the enforcement agency for all applicable inspections. I understand that a completed signed copy of this Certificate of Compliance is required to be included with the documentation the builder provides to the building owner at occupancy.

Responsible Designer Name: Ray Swartz	Responsible Designer Signature:
Company: tk1sc	Date Signed: 2020-10-20
Address: 11870 Pierce Street, Suite 160	License: E15610
City/State/Zip: Riverside CA 92505	Phone: 951-299-4160

Registration Number: | Registration Date/Time: | Registration Provider: EnergySoft
CA Building Energy Efficiency Standards - 2019 Nonresidential Compliance | Report Version: 2019.0.001 Schema Version: rev 20190401 | Report Generated: 2020-10-20 09:10:38

STATE OF CALIFORNIA
Indoor Lighting
NRCC-LTI-E
CALIFORNIA ENERGY COMMISSION

CERTIFICATE OF COMPLIANCE			**NRCC-LTI-E**
Project Name:	Replacement of Existing Residential Center	**Report Page:**	**(Page 4 of 7)**
Project Address:	440 East Hill Road	**Date Prepared:**	10/20/2020

I. LIGHTING POWER ALLOWANCE: COMPLETE BUILDING OR AREA CATEGORY METHODS

Each area complying using the Complete Building or Area Category Methods per §140.6(b) are included in this table. Column 06 indicates if additional lighting power allowances per §140.6(c) or adjustments per §140.6(a) are being used .

Conditioned Spaces

01	02	03	04	05	06	
Area Description	Complete Building or Area Category Primary Function Area	Allowed Density (W/ft²)	Area (ft²)	Allowed Wattage (Watts)	Additional Allowance / Adjustment Area Category	PAF
Restroom	Restrooms	0.65	417	271.05	No	No
Elec/Mech/Riser	Electrical Mechancial Telephone Room	0.4	153	61.2	No	No
Office <= 250	Office 250 square feet or less	0.7	637	445.9	No	No
Corridor	Corridor Area	0.6	1,245	747	No	No
Storage/Other	All Other Space Types	0.4	269	107.6	No	No
Classrooms	Classroom, Lecture, or Training Vocational Area	0.7	1,793	1,255.1	No	No
Library	Library Stacks	1.1	598	657.8	No	No
Computer Lab	Copy Room	0.5	605	302.5	No	No
		TOTALS:	5,717	3,848.15	See Tables J, or P for detail	

J. ADDITIONAL ALLOWANCE: AREA CATEGORY METHOD QUALIFYING LIGHTING SYSTEM

This section does not apply to this project.

K. TAILORED METHOD GENERAL LIGHTING POWER ALLOWANCE

This section does not apply to this project.

L. ADDITIONAL LIGHTING ALLOWANCE: TAILORED WALL DISPLAY

This section does not apply to this project.

M. ADDITIONAL LIGHTING ALLOWANCE: TAILORED FLOOR AND TASK LIGHTING

This section does not apply to this project.

Registration Number: | Registration Date/Time: | Registration Provider: EnergySoft
CA Building Energy Efficiency Standards - 2019 Nonresidential Compliance | Report Version: 2019.0.001 Schema Version: rev 20190401 | Report Generated: 2020-10-20 09:10:38

STATE OF CALIFORNIA
Indoor Lighting
NRCC-LTI-E
CALIFORNIA ENERGY COMMISSION

CERTIFICATE OF COMPLIANCE			**NRCC-LTI-E**
Project Name:	Replacement of Existing Residential Center	**Report Page:**	**(Page 5 of 7)**
Project Address:	440 East Hill Road	**Date Prepared:**	10/20/2020

N. ADDITIONAL LIGHTING ALLOWANCE: TAILORED ORNAMENTAL/SPECIAL EFFECTS

This section does not apply to this project.

O. ADDITIONAL LIGHTING ALLOWANCE: TAILORED VERY VALUABLE MERCHANDISE

This section does not apply to this project.

P.POWER ADJUSTMENT: LIGHTING CONTROL CREDIT (POWER ADJUSTMENT FACTOR (PAF))

This section does not apply to this project.

Q. RATED POWER REDUCTION COMPLIANCE FOR ALTERATIONS

This section does not apply to this project.

R. 80% LIGHTING POWER FOR ALLALTERATIONS - CONTROLS EXCEPTIONS

This section does not apply to this project.

S. DAYLIGHT DESIGN POWER ADJUSTMENT FACTOR (PAF)

This section does not apply to this project.

Registration Number: | Registration Date/Time: | Registration Provider: EnergySoft
CA Building Energy Efficiency Standards - 2019 Nonresidential Compliance | Report Version: 2019.0.001 Schema Version: rev 20190401 | Report Generated: 2020-10-20 09:10:38

STATE OF CALIFORNIA
Indoor Lighting
NRCC-LTI-E
CALIFORNIA ENERGY COMMISSION

CERTIFICATE OF COMPLIANCE			**NRCC-LTI-E**
Project Name:	Replacement of Existing Residential Center	**Report Page:**	**(Page 2 of 7)**
Project Address:	440 East Hill Road	**Date Prepared:**	10/20/2020

C. COMPLIANCE RESULTS

If any cell on this table says "DOES NOT COMPLY" or "COMPLIES with Exceptional Conditions" refer to Table D, for guidance.

Lighting in conditioned and unconditioned spaces must not be combined for compliance per §140.6(b)1	Allowed Lighting Power per §140.6(b) (Watts) 01 Complete Building §140.6(c)1 (See Table I)	02 Area Category §140.6(c)2 (See Table I)	03 Area Category Additional §140.6(c)2(E) (+) (See Table J)	04 Tailored §140.6(c)3 (+) (See Table K)	=	05 Total Allowed (Watts)	≥	Adjusted Lighting Power per §140.6(a) (Watts) 06 Total Designed (Watts) (See Table F)	07 Adjustments PAF Lighting Control Credits §140.6(a)2 (-) (See Table P)	=	08 Total Adjusted (Watts) *Includes Adjustments	Compliance Results 09
												05 must be >= 08 §140.6
Conditioned	0	3,848.15	0	0	=	3848.15	≥	2,690.9	0	=	2690.9	COMPLIES
Unconditioned	0	0	0	0	=		≥	0	0	=		
									Controls Compliance (See Table H for Details)			COMPLIES
									Rated Power Reduction Compliance (See Table Q for Details)			

D. EXCEPTIONAL CONDITIONS

This table is auto-filled with uneditable comments because of selections made or data entered in tables throughout the form.

E. ADDITIONAL REMARKS

This table includes remarks made by the permit applicant to the Authority Having Jurisdiction.

F. INDOOR LIGHTING FIXTURE SCHEDULE

This table includes all permanent designed lighting and all portable lighting in offices.

Designed Wattage: Conditioned Spaces

01 Name or Item Tag	02 Complete Luminaire Description	03 Modular (Track) Fixture	04 Small Aperture & Color Change	05 Watts per luminaire[1]	06 How is Wattage determined	07 Total Number of Luminaires	08 Exempt per §140.6(a)3	09 Design Watts	10 Field Inspector Pass	Fail
1	1 -2x4 LED	No	No	31.2	JA8 Lamp	67	No	2,090.4	☐	☐
19	19 - Linear LED	No	No	16	JA8 Lamp	14	No	224	☐	☐

Registration Number: | Registration Date/Time: | Registration Provider: EnergySoft
CA Building Energy Efficiency Standards - 2019 Nonresidential Compliance | Report Version: 2019.0.001 Schema Version: rev 20190401 | Report Generated: 2020-10-20 09:10:38

TITLE 24 GENERAL NOTE

CONTRACTOR SHALL BE RESPONSIBLE FOR ALL WORK ASSOCIATED WITH FINAL INSPECTION AND APPLICABLE ACCEPTANCE REQUIREMENT PROCEDURES. INCLUDE ALL COSTS IN THE BASE BID. THIS SHALL INCLUDE, BUT NOT BE LIMITED TO, CONSTRUCTION INSPECTION, MEASUREMENTS, MONITORING, FUNCTIONAL TESTING, CALIBRATING, ETC. CONTRACTOR SHALL ASSUME THE ROLE OF "FIELD TECHNICIAN" AND "RESPONSIBLE PERSON" AS DEFINED IN STATE OF CALIFORNIA 2019 BUILDING ENERGY EFFICIENCY STANDARDS NONRESIDENTIAL COMPLIANCE MANUAL SECTION 13.2.2.

SEE STATE OF CALIFORNIA 2019 BUILDING ENERGY EFFICIENCY STANDARDS SECTIONS 10-103(a)3A AND 10-103(a)3B AND SECTION 130.4 FOR MORE INFORMATION.

SEE STATE OF CALIFORNIA 2019 BUILDING ENERGY EFFICIENCY STANDARDS NONRESIDENTIAL COMPLIANCE MANUAL CHAPTER 13 FOR MORE DETAILED REQUIREMENTS / INFORMATION.

SEE STATE OF CALIFORNIA 2019 BUILDING ENERGY EFFICIENCY STANDARDS RESIDENTIAL COMPLIANCE MANUAL CHAPTER 2 FOR MORE DETAILED REQUIREMENTS / INFORMATION.

PROVIDE COMPLETED INSTALLATION CERTIFICATE(S) AND CERTIFICATE(S) OF ACCEPTANCE AS REQUIRED TO THE SATISFACTION OF THE ENFORCEMENT AGENCY.

TITLE 24 PROCEDURES FOR TESTING AND ADJUSTING

CONTRACTOR SHALL BE RESPONSIBLE FOR ALL WORK ASSOCIATED WITH FINAL INSPECTION AND APPLICABLE ACCEPTANCE REQUIREMENT PROCEDURES. INCLUDE ALL COSTS IN THE BASE BID. THIS SHALL INCLUDE, BUT NOT BE LIMITED TO, CONSTRUCTION INSPECTION, MEASUREMENTS, MONITORING, FUNCTIONAL TESTING, CALIBRATING, ETC. CONTRACTOR SHALL ASSUME THE ROLE OF "FIELD TECHNICIAN" AND "RESPONSIBLE PERSON" AS DEFINED IN STATE OF CALIFORNIA 2019 BUILDING ENERGY EFFICIENCY STANDARDS NONRESIDENTIAL COMPLIANCE MANUAL SECTION 13.2.2.

LIGHTING CONTROL ACCEPTANCE TESTING AND ADJUSTING PROCEDURES – REFER TO NRCA-LTI-02-A DOCUMENTS.

AUTOMATIC DAYLIGHT CONTROL ACCEPTANCE TESTING AND ADJUSTING PROCEDURES – REFER TO NRCA-LTI-03-A DOCUMENTS.

DEMAND RESPONSE LIGHTING CONTROL ACCEPTANCE TESTING AND ADJUSTING PROCEDURES – REFER TO NRCA-LTI-04-A DOCUMENTS.

INSTITUTIONAL TUNING PAF ACCEPTANCE TESTING AND ADJUSTING PROCEDURES – REFER TO NRCA-LTI-05-A DOCUMENTS.

OUTDOOR LIGHTING CONTROL ACCEPTANCE TESTING AND ADJUSTING PROCEDURES – REFER TO NRCA-LTO-02-A DOCUMENTS.

ALL LIGHTING CONTROLS TESTING AND ADJUSTING DOCUMENTS NOTED ABOVE ARE AVAILABLE FROM THE CALIFORNIA ENERGY COMMISSION WEB SITE AT:

https://ww2.energy.ca.gov/title24/2019standards/2019_compliance_documents/Nonresidential_Documents/NRCA/

IDENTIFICATION STAMP
DIV. OF THE STATE ARCHITECT
APP: 02-118630 INC:
REVIEWED FOR
SS ☐ FLS ☐ ACS ☑
DATE: 04/13/2021

OFFICE OF THE STATE FIRE MARSHAL
APPROVED FIRE AND PANIC ONLY
Approval of this plan does not authorize or approve any omission or deviation from applicable regulations. Final approval is subject to field inspection. One set of approved plans shall be available on the project site at all times.
PERMIT NO.: 28-N-3332-CP
REVIEWED BY: LEO CATALYLO, OSFM
DATE: 4/ /2021

GENERAL SERVICES
Department of General Services
State of California
Real Estate Services Division
Project Management & Development Branch
707 Third Street, Suite 4-105
West Sacramento, California 95605

NICHOLS MELBURG & ROSSETTO ARCHITECTS + ENGINEERS
300 Knollcrest Drive
Redding, CA. 96002
(530) 222-3300 (530) 222-3538 FAX
http://www.nmrdesign.com

Copyright © 2019
All ideas, designs, arrangements and plans indicated or represented by this drawing are owned by, and the property of, NICHOLS, MELBURG and ROSSETTO and were created, evolved and developed for use on, and in connection with, the specified project. None of such ideas, designs, arrangements or plans shall be used by, or disclosed to, any person, firm or corporation for any purpose whatsoever without the written permission of NICHOLS, MELBURG and ROSSETTO.

LICENSE STAMPS

REGISTERED PROFESSIONAL ENGINEER RAYMOND W. SWARTZ No. E15610 12/31/2021 ELECTRICAL STATE OF CALIFORNIA
Date Signed: 3/25/2021

CONSULTANT
tklsc COLLABORATIVE
11870 Pierce Street, Suite 160
Riverside, California 92505
951.299.4160 www.tk1sc.com
Project Leader - Jerry Leonhardt
Electrical Lead - Reid Cordry
tk1sc Job #:2019-0228A

DRAWING STATUS
CONSTRUCTION DOCUMENTS

ISSUE

No.	Date	Description
1	10/20/2020	INITIAL PLAN REVIEW
2	01/22/2021	AGENCY RESUBMITTAL
3	03/22/2021	AGENCY RESUBMITTAL

If drawing is not 30" x 42" it is a reduced print

PROJECT
RESIDENTIAL CENTER, UKIAH: REPLACEMENT OF EXISTING RESIDENTIAL CENTER
440 EAST HILL ROAD
WILLITS, CALIFORNIA 95490
MENDOCINO COUNTY
CALIFORNIA CONSERVATION CORP

Supervisor	Designed	Drawn
		Author

DSA Application No.
02-118630

SHEET TITLE
TITLE 24 EDUCATION BUILDING

DGS Project Number	NMR Project Number
0000000000001826	18-6456

Reference North: NORTH
Sheet Scale:
Sheet Number: E505E

ISSUE DATE
July 9, 2021

Plot Date: 3/22/2021 9:00:05 AM
File Name: BIM 360:/CCC Willits Residential Center/E_CCC Willits_COMMON_2019-0228A.rvt

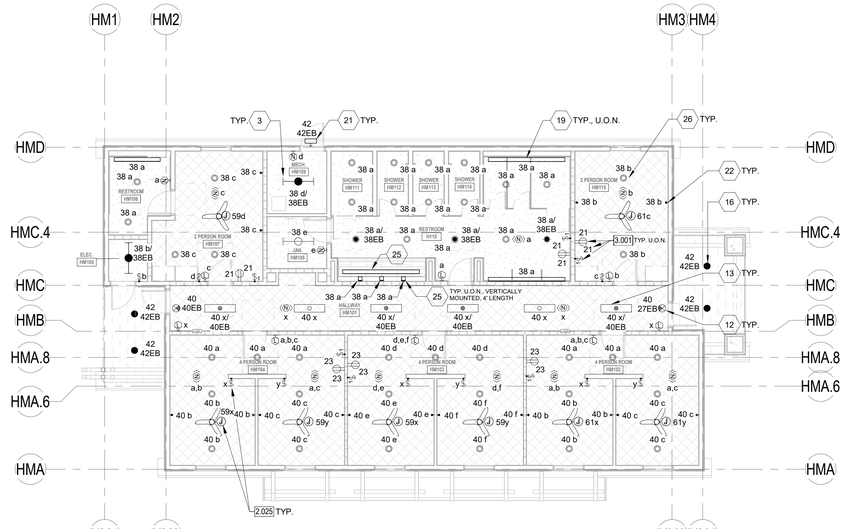

MEN'S HOUSING LIGHTING PLAN

SCALE: 1/8" = 1'-0"

KEYNOTES

2.025	CONNECT TO CEILING FAN PER MANUFACTURER'S REQUIREMENTS.
3.001	RECEPTACLE, SWITCH, AND LIGHT FIXTURE MOUNTED ABOVE CEILING. PROVIDE A KEYLESS PLASTIC LAMP HOLDER LEVITON #R50-08829-CW4, OR EQUAL, MOUNTED ON A JUNCTION BOX WITH ONE LED A19 9W LAMP. COORDINATE AND VERIFY EXACT MOUNTING LOCATION IN FIELD WITH MECHANICAL EQUIPMENT INSTALLER PRIOR TO ROUGH IN.

VOLTAGE DROP WORKSHEET: REFERENCE ONLY

1. ALL BRANCH CIRCUITS ARE DESIGNED TO LIMIT VOLTAGE DROP 3% OR LESS USING THE FOLLOWING CRITERIA:

208 VOLT, 1 PHASE LOAD:

LOAD (VA)	DISTANCE	CU CONDUCTOR SIZE
0-1000 VA (500 PER PHASE) 0-4.8 AMPS	0-225 FT	#12
	226-360 FT	#10
	361-572 FT	#8
1001-2000 VA (1,000 PER PHASE) 4.8-9.6 AMPS	0-151 FT	#12
	152-240 FT	#10
	241-380 FT	#8
	381-604 FT	#6
2001-3,328 VA (1,664 PER PHASE) 9.6-16 AMPS	0-78 FT	#12
	79-125 FT	#10
	126-198 FT	#8
3329-4,992 VA (2,496 PER PHASE) 16-24 AMPS	0-52 FT	#12
	53-83 FT	#10
	84-132 FT	#8

120 VOLT, 1 PHASE LOAD:

LOAD (VA)	DISTANCE	CU CONDUCTOR SIZE
0-1000 VA 0-8 AMPS	0-130 FT	#12
	131-205 FT	#10
	205-330 FT	#8
1001-1500 VA 8-12.5 AMPS	0-87 FT	#12
	88-138 FT	#10
	139-219 FT	#8
	220-350 FT	#6
1501-1920 VA 12.5-16 AMPS	0-68 FT	#12
	69-108 FT	#10
	109-172 FT	#8
	173-273 FT	#6
1921-2880 VA 16-24 AMPS	0-72 FT	#10
	73-114 FT	#8
	115-182 FT	#6

ANY 3 PHASE LOADS GREATER THAN 30 AMPS ARE SHOWN ON THE FEEDER SCHEDULE OR MOTORIZED EQUIPMENT SCHEDULE WITH ASSOCIATED VOLTAGE DROP LIMITED TO 2% OR LESS.

LIGHTING PLAN GENERAL NOTES:

1. REFER TO ARCHITECTURAL PLANS FOR EXACT LOCATION AND ELEVATION OF ALL LIGHTING FIXTURES AND ALL DEVICES. ALL WALL-MOUNTED DEVICE HEIGHTS SHALL BE VERIFIED WITH THE ARCHITECT PRIOR TO ROUGH-IN.
2. VERIFY EXACT CEILING CONSTRUCTION WITH ARCHITECTURAL REFLECTED CEILING PLAN AND PROVIDE LIGHTING FIXTURES WITH ALL NECESSARY MOUNTING HARDWARE.
3. ALL RECESSED FIXTURES SHALL BE PROVIDED WITH ALL REQUIRED STRUCTURAL SUPPORTS AS REQUIRED BY THE CURRENTLY ADOPTED ISSUE OF THE IBC, OR CBC WHERE ADOPTED, IN ADDITION TO ANY LOCAL CODES
4. ALL COVE MOUNTED FIXTURES SHALL EXTEND THE FULL LENGTH OF THE COVE. CONTRACTOR TO FIELD MEASURE COVE LENGTH AND ORDER QUANTITY OF FIXTURES AS REQUIRED.
5. ALL DIMMING BRANCH CIRCUITS SHALL BE PROVIDED WITH A DEDICATED NEUTRAL CONDUCTOR FOR EACH ZONE/CHANNEL.
6. ALL FLUORESCENT DIMMING ZONES/CHANNELS SHALL BE PROVIDED WITH 3 LINE VOLTAGE CONDUCTORS (NEUTRAL, DIMMED HOT, SWITCHED HOT) OR 2 LINE VOLTAGE CONDUCTORS/2 CONTROL CONDUCTORS AS REQUIRED BY THE CONTROL/BALLAST TYPE.
7. ALL EMERGENCY BATTERY PACK FIXTURES SHALL BE PROVIDED WITH A CONSTANT HOT CONNECTION TO THE CHARGING LEAD. SEE GENERAL LIGHTING FIXTURE SCHEDULE NOTES FOR MORE INFORMATION.
8. REFER TO ARCHITECTURAL REFLECTED CEILING PLANS FOR EXIT SIGN CHEVRONS AND NUMBER OF FACES PER EXIT SIGN. ANY DISCREPANCIES BETWEEN EXIT SIGNS SHOWN ON THE ELECTRICAL AND ARCHITECTURAL PLANS SHALL BE BROUGHT TO THE ATTENTION OF THE ARCHITECT PRIOR TO ORDERING EXIT SIGNS.
9. WHEN EXPOSED CEILINGS OR OPEN GRID CONDITIONS OCCUR, THE CONTRACTOR WILL NEED TO PROVIDE THE FOLLOWING ITEMS:

   - ALL BRANCH CIRCUITS SHALL BE IN EMT.

   - ALL BRANCH CIRCUITS SHALL BE ROUTED, NEATLY TRAINED, AND IN PARALLEL TO STRUCTURES OR DUCT WORK. THE TERM "TRAINED" MEANS ALL PARALLEL CONDUITS SHALL MAINTAIN THE SAME SPATIAL RELATIONSHIP WITH EACH OTHER FOR ENTIRE RUN TO INCLUDE RADIUS BENDS AND SWEEPS.

   - VISUALLY OBJECTIONABLE BRANCH CIRCUITS WILL BE REROUTED AT THE REQUEST OF THE ARCHITECT AT NO ADDITIONAL COST.
10. ALL LED REMOTE INDICATORS FOR DUCT DETECTORS AND FIRE/SMOKE DAMPERS REQUIRED BY THE SFM SHALL BE LOCATED IN CEILINGS IN COORDINATION WITH ARCHITECT PRIOR TO ANY ROUGH-IN.
11. RECESSED FIXTURES LOCATED IN A FIRE-RATED CEILING OR WALL SHALL BE PROVIDED WITH A 5-SIDED RATED ENCLOSURE SO CONSTRUCTED AS TO ALLOW CODE AND MANUFACTURER-REQUIRED CLEARANCES BETWEEN THE FIXTURE AND THE ENCLOSURE.
12. PROVIDE REDUNDANT GROUND PATH IN ALL BRANCH CIRCUITS SERVING PATIENT CARE AREAS CONSISTING OF A SEPARATE, INSULATED EQUIPMENT GROUNDING CONDUCTOR PER NEC, OR CEC WHERE ADOPTED, ART 517.13.
13. PROVIDE ADDITIONAL J-BOX NEAR PANEL FOR MULTIPLE HOMERUN CIRCUITRY.
14. UNLESS SPECIFICALLY SHOWN AS (E), (R), (ER), (D), EXISTING OR NON-BOLD, ALL ELECTRICAL DEVICES SHOWN ARE NEW.
15. REFER TO GENERAL POWER PLAN NOTES AND COMMUNICATIONS PATHWAYS GENERAL NOTES FOR ADDITIONAL REQUIREMENTS WHEN POWER AND/OR DATA DEVICES ARE SHOWN ON THIS PLAN.
16. CONTRACTOR SHALL PROVIDE CONDUIT AND WIRE FOR ALL DEVICES TO PANELBOARD(S) INDICATED ON PLANS FOR A COMPLETE AND OPERABLE SYSTEM.
17. CONTRACTOR SHALL PROVIDE MINIMUM 2#12, 1#12G IN ½" CONDUIT UNLESS OTHERWISE NOTED. REFERENCE WIRE SIZE TABLE CHART ABOVE. WHERE REQUIRED, CONDUIT AND WIRE SHALL BE UPSIZED TO MEET THE REQUIREMENT OF THE DEVICE BEING SERVED BY THE BRANCH CIRCUIT. WHERE CONDUIT AND WIRING IS INDICATED AT THE HOME RUN, WIRING AND CONDUIT SHALL CONTINUE AT THAT SIZE FOR THE ENTIRE LENGTH OF THE CIRCUIT.
18. CONTRACTOR SHALL FURNISH ADDITIONAL SWITCHLEGS OR HOT WIRES AS REQUIRED TO MEET THE CONTROL INTENT OF THE DOCUMENTS AND AS REQUIRED BY CODE (I.E. EMERGENCY LIGHTING AND SWITCHED RECEPTACLES).
19. MULTIPLE CIRCUITS MAY BE USED IN A SINGLE RACEWAY. NO MORE THAN (3) DEDICATED CIRCUITS OR (4) CURRENT CARRYING CONDUCTORS SHALL BE INSTALLED IN ANY RACEWAY UNLESS OTHERWISE NOTED. WHERE A COMMON GROUNDED CONDUCTOR IS USED FOR MULTIPLE INDIVIDUAL BRANCH CIRCUITS, PER SECTIONS CEC 200.4, 250.122, 310.15(B)(2), CONDUIT SIZE SHALL BE INCREASED AS REQUIRED FOR THE CONDUCTORS INCLUDING TEMPERATURE DERATING PER CEC TABLE C1.
20. FURNISH AND INSTALL JUNCTION BOXES AS REQUIRED TO MEET MAXIMUM BEND REQUIREMENTS FOR PULLING WIRES PER CEC 358.26. JUNCTION BOXES SHALL BE SIZED AS REQUIRED PER CEC 314.28 UNLESS OTHERWISE NOTED.

WALL TYPES LEGEND

SEE SHEET G121 FOR ASSEMBLY TYPES

EXTERIOR

	2 x 6 WOOD STUD WALL - NON RATED	0-W1-6 * ● #
	2 x 12 WOOD STUD WALL - NON RATED	0-W1-12 * ● #

INTERIOR

	2 x 4 WOOD STUD WALL - NON RATED	0-W2-4 * ● #
	2 x 6 WOOD STUD WALL - NON RATED	0-W2-6 * ● #
	2 x 8 WOOD STUD WALL - NON RATED	0-W2-8 * ● #
	2 x 12 WOOD STUD WALL - NON RATED	0-W2-12 * ● #
	2 x 4 WOOD STUD WALL - ACOUSTIC	0-W5-4 * ● #
	2 x 6 WOOD STUD WALL - ACOUSTIC	0-W5-6 * ● #
	2 X 4 WOOD STUD WALL - 1-HR FIRE PARTITION W/ PROTECTED OPENINGS	1-W3-4 * ● #
	2 X 6 WOOD STUD WALL - 1-HR FIRE PARTITION W/ PROTECTED OPENINGS	1-W3-6 * ● #

WALL TYPE NOTES

PARTITION SYMBOL

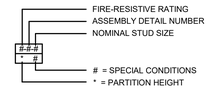

IDENTIFICATION STAMP
DIV. OF THE STATE ARCHITECT
APP: 02-118630 INC:
REVIEWED FOR
SS ☐ FLS ☐ ACS ☑
DATE: 04/13/2021

OFFICE OF THE STATE FIRE MARSHAL
APPROVED FIRE AND PANIC ONLY
Approval of this plan does not authorize or approve any omission or deviation from applicable regulations. Final approval is subject to field inspection. One set of approved plans shall be available on the project site at all times.
PERMIT NO.: 26 N 2332-CP
REVIEWED BY: LEO CATALYLO, OSFM
DATE: 4 / /2021

GENERAL SERVICES
Department of General Services
State of California
Real Estate Services Division
Project Management & Development Branch
707 Third Street, Suite 4-105
West Sacramento, California 95605

NICHOLS MELBURG & ROSSETTO
ARCHITECTS + ENGINEERS
300 Knollcrest Drive
Redding, CA. 96002
(530) 222-3300 (530) 222-3538 FAX
http://www.nmrdesign.com

Copyright © 2019
All ideas, designs, arrangements and plans indicated or represented by this drawing are owned by, and the property of, NICHOLS, MELBURG and ROSSETTO and were created, evolved and developed for use on, and in connection with, the specified project. None of such ideas, designs, arrangements or plans shall be used by, or disclosed to any person, firm or corporation for any purpose whatsoever without the written permission of NICHOLS, MELBURG and ROSSETTO.

LICENSE STAMPS

REGISTERED PROFESSIONAL ENGINEER RAYMOND W. SWIFT No. E15610 EXP. 12/31/2021 ELECTRICAL STATE OF CALIFORNIA
Date Signed: 3/25/2021

CONSULTANT
tk1sc COLLABORATIVE
11870 Pierce Street, Suite 160
Riverside, California 92505
951.299.4160 www.tk1sc.com
Project Leader - Jerry Leonhardt
Electrical Lead - Reid Cordry
tk1sc Job #:2019-0228A

DRAWING STATUS
CONSTRUCTION DOCUMENTS

ISSUE

No.	Date	Description
1	10/20/2020	INITIAL PLAN REVIEW
2	01/22/2021	AGENCY RESUBMITTAL
3	03/22/2021	AGENCY RESUBMITTAL

If drawing is not 30" x 42" it is a reduced print

PROJECT
RESIDENTIAL CENTER, UKIAH: REPLACEMENT OF EXISTING RESIDENTIAL CENTER
440 EAST HILL ROAD
WILLITS, CALIFORNIA 95490
MENDOCINO COUNTY
CALIFORNIA CONSERVATION CORPS

Supervisor	Designed	Drawn
		Author

DSA Application No.
XX-XXXXXX

SHEET TITLE
MEN'S HOUSING LIGHTING PLAN

DGS Project Number: 0000000000001826
NMR Project Number: 18-6456

Reference North
Sheet Scale: As indicated
Sheet Number: E101HM

ISSUE DATE
July 9, 2021

Plot Date: 3/22/2021 9:07:19 AM
File Name: BIM 360://CCC Willits Residential Center/E_CCC Willits_DORM-MEN_2019-0228A.rvt

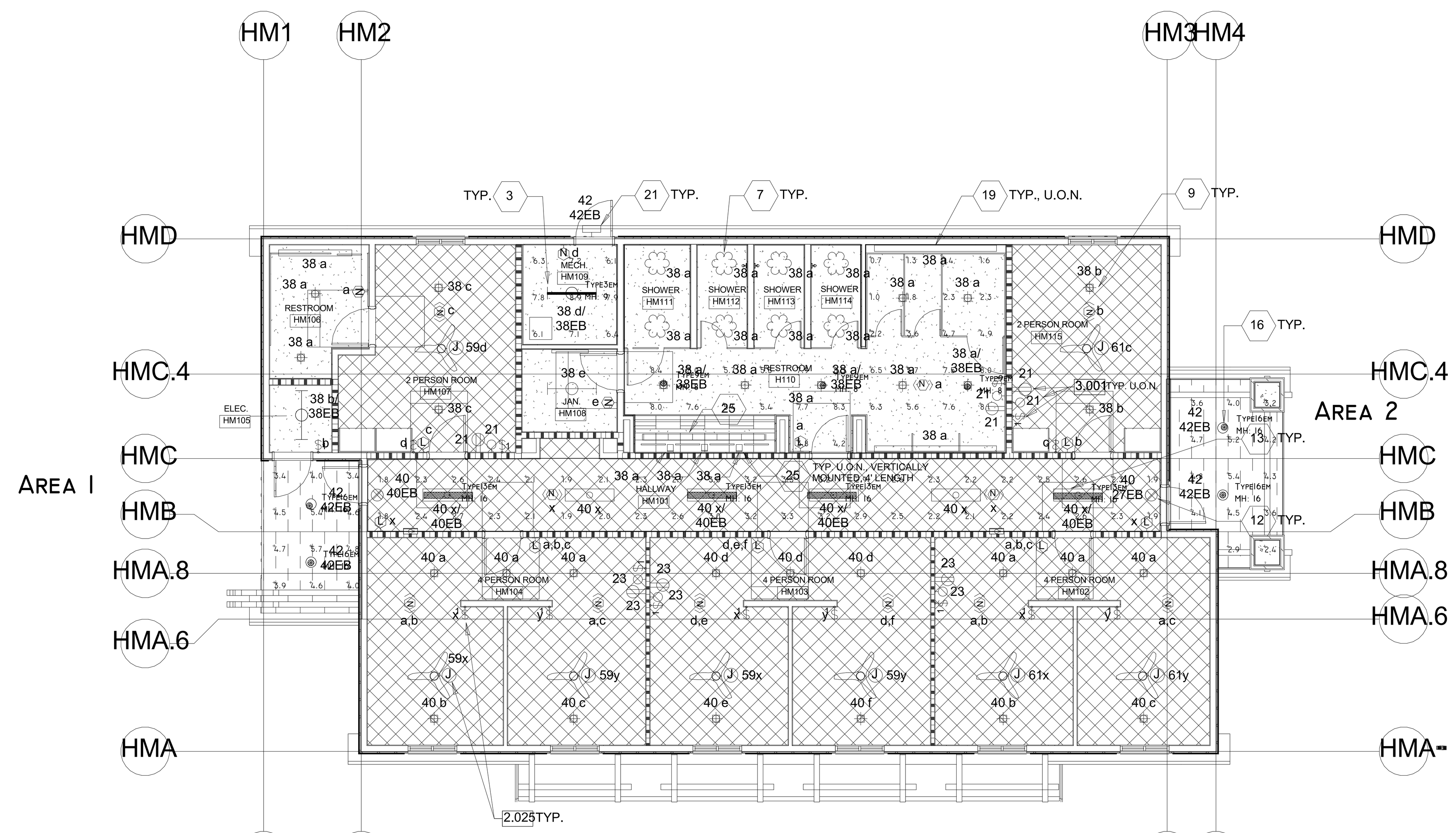

Luminaire Schedule					
Symbol	Qty	Label	Arrangement	Description	BUG Rating
	4	Type16em	SINGLE	Cooper Halo Commercial PD615ED010- PDM6A835-61VC-em7wbattery	B2-U0-G0
	3	Type9em	SINGLE	Cooper Halo Commercial HC610D010-HM612835-61WDWF	B1-U0-G0
	1	Type3em	SINGLE	Cooper Metalux 4SNLED-LD5-22SL-LN-UNV-L835-CD1-U-EL7	B1-U3-G1
	4	Type13em	SINGLE	Cooper Fail Safe HVL8-4-LD4-1STD-35-UNV-C-EL14	B1-U3-G1

Calculation Summary							
Label	CalcType	Units	Avg	Max	Min	Avg/Min	Max/Min
Area1	Illuminance	Fc	4.42	5.7	3.4	1.30	1.68
Area2	Illuminance	Fc	4.06	5.4	2.4	1.69	2.25
Hallway HM101_Floor	Illuminance	Fc	2.46	3.3	1.8	1.37	1.83
Mech Rm HM109_Floor	Illuminance	Fc	7.09	8.9	6.1	1.16	1.46
Restroom H110_Floor	Illuminance	Fc	5.22	8.5	0.7	7.46	12.14

MEN'S HOUSING EMERGENCY LIGHTING PHOTOMETRIC PLAN

SCALE: 1/8" = 1'-0"

NORTH

IDENTIFICATION STAMP
DIV. OF THE STATE ARCHITECT
APP: 02-118630 INC:
REVIEWED FOR
SS ☐ FLS ☐ ACS ☑
DATE: 04/13/2021

OFFICE OF THE STATE FIRE MARSHAL
APPROVED FIRE AND PANIC ONLY
Approval of this plan does not authorize or approve any omission or deviation from applicable regulations. Final approval is subject to field inspection. One set of approved plans shall be available on the project site at all times.
PERMIT NO.: 20-N-2332-CP
REVIEWED BY: LEO CATAYLO, OSFM
DATE: 4/1/2021

DGS
GENERAL SERVICES
Department of General Services
State of California
Real Estate Services Division
Project Management & Development Branch
707 Third Street, Suite 4-105
West Sacramento, California 95605

NICHOLS MELBURG & ROSSETTO
ARCHITECTS + ENGINEERS
300 Knollcrest Drive
Redding, CA. 96002
(530) 222-3300 (530) 222-3538 FAX
http://www.nmrdesign.com

Copyright © 2019
All ideas, designs, arrangements and plans indicated or represented by this drawing are owned by, and the property of, NICHOLS, MELBURG and ROSSETTO and were created, evolved and developed for use on, and in conjunction with, the specified project. None of such ideas, designs, arrangements or plans shall be used by, or disclosed to any person, firm or corporation for any purpose whatsoever without the written permission of NICHOLS, MELBURG and ROSSETTO.

LICENSE STAMPS
REGISTERED PROFESSIONAL ENGINEER
RAYMOND W. SWARTZ
No. E15610
Exp. 12/31/2021
ELECTRICAL
STATE OF CALIFORNIA
Date Signed 3/25/2021

CONSULTANT
tk1sc
COLLABORATIVE
11870 Pierce Street, Suite 160
Riverside, California 92505
951.299.4160 www.tk1sc.com
Project Leader - Jerry Leonhardt
Electrical Lead - Reid Cordry
tk1sc Job #:2019-0228A

DRAWING STATUS
CONSTRUCTION DOCUMENTS

ISSUE

No.	Date	Description
1	10/20/2020	INITIAL PLAN REVIEW
2	01/22/2021	AGENCY RESUBMITTAL
3	03/22/2021	AGENCY RESUBMITTAL

If drawing is not 30" x 42" it is a reduced print

PROJECT
RESIDENTIAL CENTER, UKIAH: REPLACEMENT OF EXISTING RESIDENTIAL CENTER
440 EAST HILL ROAD
WILLITS, CALIFORNIA 95490
MENDOCINO COUNTY
CALIFORNIA CONSERVATION CORPS

Supervisor	Designed	Drawn
		Author

DSA Application No.
XX-XXXXXX

SHEET TITLE
MEN'S HOUSING EMERGENCY LIGHTING PHOTOMETRIC PLAN

DGS Project Number	NMR Project Number
000000000001826	18-6456

Reference North: NORTH
Sheet Scale: 1/8" = 1'-0"
Sheet Number: E102HM

ISSUE DATE
July 9, 2021

Plot Date: 3/22/2021 9:07:20 AM
File Name: BIM 360://CCC Willits Residential Center/E_CCC Willits_DORM-MEN_2019-0228A.rvt

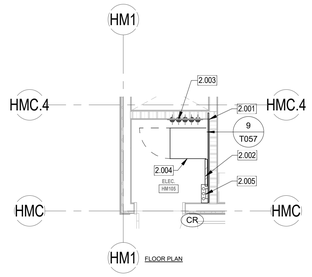

FLOOR PLAN

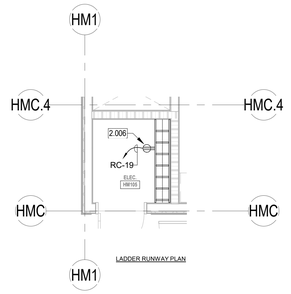

LADDER RUNWAY PLAN

2 MEN'S HOUSING ENLARGED IDF PLANS HM105

SCALE: 1/4" = 1'-0"

3 MEN'S HOUSING ENLARGED IDF - LADDER RUNWAY PLAN

SCALE: 1/4" = 1'-0"

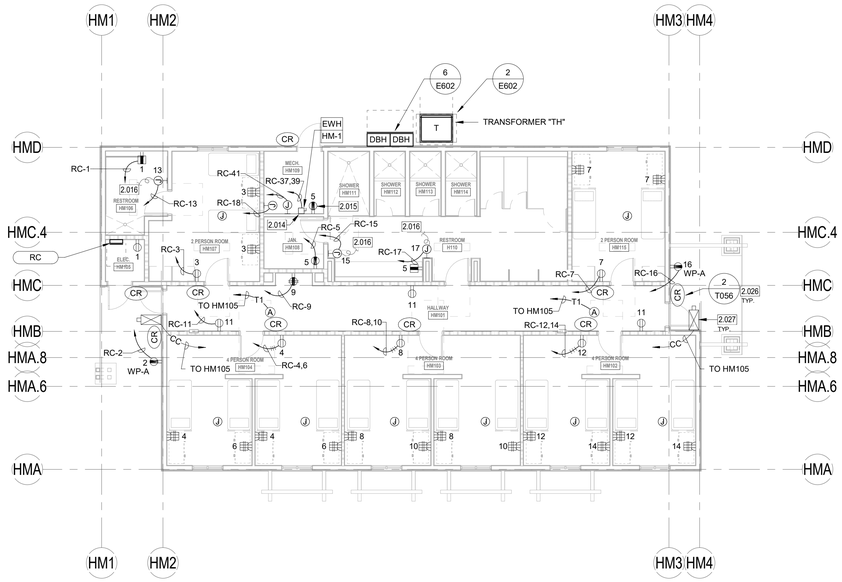

MEN'S HOUSING POWER AND SIGNAL PLAN

SCALE: 1/8" = 1'-0"

VOLTAGE DROP WORKSHEET: REFERENCE ONLY

1. ALL BRANCH CIRCUITS ARE DESIGNED TO LIMIT VOLTAGE DROP 3% OR LESS USING THE FOLLOWING CRITERIA:

208 VOLT, 1 PHASE LOAD:

LOAD (VA)	DISTANCE	CU CONDUCTOR SIZE
0-1000 VA (500 PER PHASE) 0-4.8 AMPS	0-225 FT	#12
	226-360 FT	#10
	361-572 FT	#8
1001-2000 VA (1,000 PER PHASE) 4.8-9.6 AMPS	0-151 FT	#12
	152-240 FT	#10
	241-380 FT	#8
	381-604 FT	#6
2001-3,328 VA (1,664 PER PHASE) 9.6-16 AMPS	0-78 FT	#12
	79-125 FT	#10
	126-198 FT	#8
3329-4,992 VA (2,496 PER PHASE) 16-24 AMPS	0-52 FT	#12
	53-83 FT	#10
	84-132 FT	#8

120 VOLT, 1 PHASE LOAD:

LOAD (VA)	DISTANCE	CU CONDUCTOR SIZE
0-1000 VA 0-8 AMPS	0-130 FT	#12
	131-205 FT	#10
	205-330 FT	#8
1001-1500 VA 8-12.5 AMPS	0-87 FT	#12
	88-138 FT	#10
	139-219 FT	#8
	220-350 FT	#6
1501-1920 VA 12.5-16 AMPS	0-68 FT	#12
	69-108 FT	#10
	109-172 FT	#8
	173-273 FT	#6
1921-2880 VA 16-24 AMPS	0-72 FT	#10
	73-114 FT	#8
	115-182 FT	#6

ANY 3 PHASE LOADS GREATER THAN 30 AMPS ARE SHOWN ON THE FEEDER SCHEDULE OR MOTORIZED EQUIPMENT SCHEDULE WITH ASSOCIATED VOLTAGE DROP LIMITED TO 2% OR LESS.

WALL TYPE NOTES

PARTITION SYMBOL

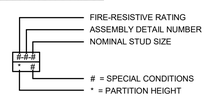

WALL TYPES LEGEND

SEE SHEET G121 FOR ASSEMBLY TYPES

EXTERIOR

	2 x 6 WOOD STUD WALL - NON RATED	0-W1-6 * ● #
	2 x 12 WOOD STUD WALL - NON RATED	0-W1-12 * ● #

INTERIOR

	2 x 4 WOOD STUD WALL - NON RATED	0-W2-4 * ● #
	2 x 6 WOOD STUD WALL - NON RATED	0-W2-6 * ● #
	2 x 8 WOOD STUD WALL - NON RATED	0-W2-8 * ● #
	2 x 12 WOOD STUD WALL - NON RATED	0-W2-12 * ● #
	2 x 4 WOOD STUD WALL - ACOUSTIC	0-W5-4 * ● #
	2 x 6 WOOD STUD WALL - ACOUSTIC	0-W5-6 * ● #
	2 X 4 WOOD STUD WALL - 1-HR FIRE PARTITION W/ PROTECTED OPENINGS	1-W3-4 * ● #
	2 X 6 WOOD STUD WALL - 1-HR FIRE PARTITION W/ PROTECTED OPENINGS	1-W3-6 * ● #

KEYNOTES

2.001 PLYWOOD BACKBOARD AND TELECOMMUNICATIONS BUSBAR BY E.C. SCS CONTRACTOR SHALL INSTALL #6 WITH GREEN INSULATION TO EACH DATA EQUIPMENT RACK/CABINET, OVERHEAD LADDER TRAY/LADDER RACK, TELECOMMUNICATIONS CONDUITS, TELECOMMUNICATIONS CABLE TRAY(S), ANTI STATIC TILE GROUNDING POINTS ETC. AS REQUIRED. CONNECTIONS SHALL BE MADE WITH 2 HOLE COMPRESSION CONNECTORS. ALL CONNECTIONS SHALL BE BARE METAL TO BARE METAL USING APPROPRIATE ANTIOXIDANT COMPOUND.

2.002 WALL FIELD FOR CAMPUS COPPER BACKBONE CABLE

2.003 4" UNDERGROUND CONDUIT FOR CAMPUS BACKBONE CABLE

2.004 WALL MOUNT CABINET, (CPI PN#12419-736, CPI PN#40975-001, CPI PN#40973-001) ON EXISTING WALL BOARD. SCS CONTRACTOR TO VERIFY PROPER SPACE AND CLEARANCE BEFORE INSTALLATION.

2.005 ANSI-J-STD 607A COMPLIANT U.L.-LISTED TELECOMMUNICATIONS MAIN GROUND BUSBAR (TMGB) CHATSWORTH #40153-020 OR EQUAL BY HARGER. MOUNT 12"A.F.F. PROVIDE 1/8" BRASS ENGRAVED NAMEPLATE WITH ABBREVIATION "T.M.G.B." AND ATTACH TO BUS BAR. PROVIDE #6 GROUND CONDUCTOR WITH GREEN INSULATION TO EACH DATA EQUIPMENT RACK/CABINET, OVERHEAD LADDER TRAY/LADDER RACK, ETC. AS REQUIRED. CONNECTIONS SHALL BE MADE WITH 2 HOLE COMPRESSION CONNECTORS. CONNECTIONS SHALL BE BARE METAL TO BARE METAL USING APPROPRIATE ANTIOXIDANT COMPOUND. PROVIDE ALL OTHER GROUNDING REQUIREMENTS AS DETAILED IN THE PATHWAYS & GROUNDING RISER DIAGRAM SHEET T4.07. ELECTRICAL CONTRACTOR SHALL PROVIDE 1/2"C. WITH #6AWG WITH GREEN INSULATION FROM TMGB TO GROUND BUSBAR LOCATED INSIDE MPOE ROOM ELECTRICAL PANEL. ELECTRICAL CONTRACTOR SHALL PROVIDE TELECOMMUNICATIONS BONDING CONDUCTOR (TBC) CONSISTING OF (1) 1"C., W/ #1AWG (U.O.N.) WITH GREEN INSULATION CONNECTING MAIN BUILDING GROUND BUS BAR LOCATED IN MAIN ELECTRICAL ROOM TO THE TELECOMMUNICATIONS MAIN GROUNDING BUSBAR (TMGB) UTILIZING 2-HOLE COMPRESSION CONNECTORS. LABEL EACH END OF TBC WITH A GROUND WARNING TAG (PANDUIT #PT-BGRND OR EQUAL).

2.006 NEMA L6-30R 30A TWIST-LOCK MOUNTED TO LADDER RACK, PROVIDED BY E.C.

2.014 CONNECT COMPLETE TO WATER HEATER AS REQUIRED. PROVIDE CODE SIZED DISCONNECT SWITCH AT THE WATER HEATER AS REQUIRED. COORDINATE LOCATION WITH PLUMBING CONTRACTOR PRIOR TO ROUGH-IN.

2.015 CONNECT CIRCULATION PUMP. TIME CLOCK AND/OR AQUASTAT AS REQUIRED. PROVIDE CODE SIZED DISCONNECT SWITCH AS REQUIRED. SEE PLUMBING PLANS FOR MORE INFORMATION. COORDINATE LOCATION WITH PLUMBING CONTRACTOR PRIOR TO ROUGH-IN.

2.016 PROVIDE CONNECTION TO ELECTRIC HAND DRYERS PER MANUFACTURER'S REQUIREMENTS.

2.026 ACCESS CONTROL SYSTEM CARD READER WITH CONDUIT AND CABLING, PER SPECIFICATIONS. SEE SHEET T.056 FOR MORE INFORMATION.

2.027 CCTV LOCATION, EXTERIOR MOUNT IOP CAMERA. PROVIDE AND INSTALL FLUSH MOUNTED SINGLE GANG J-BOX WITH 1" WATERPROOF SLEEVE TO THE ACCESSIBLE CEILING SPACE FOR FUTURE EXTERIOR CCTV CAMERA. PROVIDE (1)CAT-6A CABLE TO EQUIPMENT PATCH PANEL IN NEAREST IDF/MDF ROOM. PROVIDE FIRE STOP PER CODE. MINIMUM 1/2" DEEP FIRE STOP PUTTY ON EACH SIDE FOR SOUND ISOLATION FOR FIRE RATED WALL PENETRATIONS. COORDINATE FINAL LOCATION WITH ARCH RCP. SEE SHEET T055 FOR MORE INFORMATION.

POWER PLAN GENERAL NOTES:

1. ALL RECEPTACLES ON COMMON WALLS SHALL BE SEPARATE BOXES AND OFFSET 24-INCHES MINIMUM.
2. ALL PENETRATIONS THROUGH FIRE RATED WALLS SHALL BE PROTECTED FROM THE SPREAD OF FIRE WITH AN APPROVED FIRESTOP SYSTEM EQUAL OR GREATER THAN THE FIRE RATING OF THE WALL.
3. ALL WALL-MOUNTED DEVICE HEIGHTS SHALL BE VERIFIED WITH THE ARCHITECT PRIOR TO ROUGH-IN.
4. ALL FURNITURE FEED LOCATIONS TO BE VERIFIED WITH ARCHITECT AND FURNITURE VENDOR PRIOR TO ROUGH-IN.
5. ALL FURNITURE WHIPS SHALL BE TRIMMED TO REDUCE EXCESS WHIP LENGTH.
6. WHEN EXPOSED CEILINGS OR OPEN GRID CONDITIONS OCCUR, THE CONTRACTOR WILL NEED TO PROVIDE THE FOLLOWING ITEMS:

   - ALL BRANCH CIRCUITS SHALL BE IN EMT.

   - ALL BRANCH CIRCUITS SHALL BE ROUTED NEATLY AND IN PARALLEL TO STRUCTURES OR DUCT WORK.

   - VISUALLY OBJECTIONABLE BRANCH CIRCUITS SHALL BE REROUTED AT THE REQUEST OF THE ARCHITECT AT NO ADDITIONAL COST.
7. EXPOSED CABLE/CONDUCTORS INSTALLED IN A PLENUM SPACE SHALL CONFORM TO NEC, OR CEC WHERE ADOPTED, ARTICLE 300.22(C).
8. PROVIDE G.F.C.I. TYPE RECEPTACLE(S) OR RECEPTACLE(S) PROTECTED BY A GFCI CIRCUIT BREAKER(S) WHEN LOCATED WITHIN 6 FEET OF ANY SINK OR THERAPEUTIC TUB, LAUNDRY AREA, SERVING ANY DRINKING FOUNTAIN OR VENDING MACHINE, WITHIN ANY KITCHEN SPACE AND/OR LOCATED OUTDOORS. WHERE RECEPTACLES ARE NOT READILY ACCESSIBLE, PROVIDE GFCI CIRCUIT BREAKER(S) TO PROTECT THE RESPECTIVE BRANCH CIRCUIT AND PROVIDE ADDITIONAL NEUTRAL CONDUCTORS IN THE BRANCH CIRCUITING AS REQUIRED TO ENSURE PROPER GFCI FUNCTION
9. PROVIDE OCCUPANCY SENSOR/LIGHTING CONTROL SYSTEM CONTROLLED RECEPTACLE RELAY(S) AS REQUIRED TO SWITCH CONTROLLED RECEPTACLES. CONNECT BRANCH CIRCUITRY AND CONTROL WIRING AS REQUIRED TO ALLOW OCCUPANCY SENSOR/LIGHTING CONTROL SYSTEM RELAY TO SWITCH STANDALONE AND/OR SYSTEMS FURNITURE CONTROLLED RECEPTACLES AS INDICATED ON PLANS. PROVIDE ADDITIONAL CONDUIT, WIRING AND PATHWAYS NECESSARY TO CONNECT BRANCH CIRCUITRY AND CONTROL WIRING TO REMOTE RELAYS TO INCLUDE RELAY(S) LOCATED ON ALTERNATE FLOORS, IN ELECTRICAL ROOMS, ETC.
10. UNLESS SPECIFICALLY SHOWN AS (E), (R), (ER), (D), EXISTING OR NON-BOLD, ALL ELECTRICAL DEVICES SHOWN ARE NEW.
11. PROVIDE REDUNDANT GROUND PATH IN ALL BRANCH CIRCUITS SERVING PATIENT CARE AREAS CONSISTING OF A SEPARATE, INSULATED EQUIPMENT GROUNDING CONDUCTOR PER NEC, OR CEC WHERE ADOPTED, ART 517.13.
12. CONTRACTOR SHALL PROVIDE CONDUIT AND WIRE FOR ALL DEVICES TO PANELBOARD(S) INDICATED ON PLANS FOR A COMPLETE AND OPERABLE SYSTEM.
13. CONTRACTOR SHALL PROVIDE MINIMUM 2#12, 1#12G IN ½" CONDUIT UNLESS OTHERWISE NOTED. REFERENCE WIRE SIZE TABLE CHART ABOVE. WHERE REQUIRED, CONDUIT AND WIRE SHALL BE UPSIZED TO MEET THE REQUIREMENT OF THE DEVICE BEING SERVED BY THE BRANCH CIRCUIT. WHERE CONDUIT AND WIRING IS INDICATED AT THE HOME RUN, WIRING AND CONDUIT SHALL CONTINUE AT THAT SIZE FOR THE ENTIRE LENGTH OF THE CIRCUIT.
14. CONTRACTOR SHALL FURNISH ADDITIONAL SWITCHLEGS OR HOT WIRES AS REQUIRED TO MEET THE CONTROL INTENT OF THE DOCUMENTS AND AS REQUIRED BY CODE (I.E. EMERGENCY LIGHTING AND SWITCHED RECEPTACLES).
15. MULTIPLE CIRCUITS MAY BE USED IN A SINGLE RACEWAY. NO MORE THAN (3) DEDICATED CIRCUITS OR (4) CURRENT CARRYING CONDUCTORS SHALL BE INSTALLED IN ANY RACEWAY UNLESS OTHERWISE NOTED. WHERE A COMMON GROUNDED CONDUCTOR IS USED FOR MULTIPLE INDIVIDUAL BRANCH CIRCUITS, PER SECTIONS CEC 200.4, 250.122, 310.15(B)(2), CONDUIT SIZE SHALL BE INCREASED AS REQUIRED FOR THE CONDUCTORS INCLUDING TEMPERATURE DERATING PER CEC TABLE C1.
16. FURNISH AND INSTALL JUNCTION BOXES AS REQUIRED TO MEET MAXIMUM BEND REQUIREMENTS FOR PULLING WIRES PER CEC 358.26. JUNCTION BOXES SHALL BE SIZED AS REQUIRED PER CEC 314.28 UNLESS OTHERWISE NOTED.

COMMUNICATIONS PATHWAYS GENERAL NOTES

1. CONDUITS SHALL: (a) CONTAIN NO CONTINUOUS SECTIONS LONGER THAN 30M (98 FT.), AND, (b) CONTAIN NO MORE THAN (2) 90° BENDS OR (1) REVERSE BEND WITHOUT INSTALLING A PULLBOX. SPLIT CONDUITS IN PLACE OF PULLBOXES ARE UNACCEPTABLE.
2. CONDUITS SHALL CONTAIN PLASTIC OR NYLON PULL TAPE RATED AT 200 LBS. WITH A MINIMUM OF 5 FEET OF EXTRA PULL TAPE COILED AT EACH END.
3. CONDUIT BEND RADIUS SHALL BE (a) A MINIMUM OF 6 TIMES THE INTERNAL CONDUIT DIAMETER FOR CONDUITS 2" IN DIAMETER OR LESS, AND, (b) 10 TIMES THE INTERNAL CONDUIT DIAMETER FOR CONDUITS MORE THAN 2" IN DIAMETER.
4. TERMINATE CONDUIT STUBS AND SLEEVES THAT PROTRUDE THROUGH STRUCTURAL FLOORS 2"-3" ABOVE THE FLOOR SURFACE.
5. INSTALL BUSHINGS OR BELL ENDS AS REQUIRED ON ALL CONDUITS.
6. FLEX CONDUIT IS UNACCEPTABLE FOR USE AS A COMMUNICATIONS CONDUIT EXCEPT AT SEISMIC JOINTS AND/OR IF APPROVED IN WRITING BY THE ENGINEER.
7. ALL UNDER SLAB OR IN-SLAB CONDUITS SHALL BE INSTALLED IN A MANNER THAT PREVENTS WATER INFILTRATION OF THE CONDUIT. IT IS THE CONTRACTOR'S RESPONSIBILITY TO ENSURE GROUND WATER, RAIN WATER OR CONSTRUCTION WATER IS PREVENTED FROM ENTERING AND/OR REMOVED FROM THE CONDUITS PRIOR TO PLACEMENT OF COMMUNICATIONS CABLES. SEE ELECTRICAL SPECIFICATIONS, DETAILS AND PLANS FOR ADDITIONAL CONDUIT SEALING REQUIREMENTS.
8. ALL PULLBOXES SHALL BE SIZED AND INSTALLED PER ANSI-TIA-569-C. PULLBOXES FOR IN/UNDER SLAB CONDUIT RUNS ARE NOT PERMITTED UNLESS OTHERWISE NOTED. PULLBOXES FOR OVERHEAD CONDUIT RUNS SHALL BE LOCATED ABOVE ACCESSIBLE CEILINGS WITHIN THE ACCESSIBLE CEILING SPACE AND SUPPORTED INDEPENDENTLY FROM THE STRUCTURE AND CONDUIT SUPPORTS. PULLBOXES FOR ROOF MOUNTED OR EXTERIOR ABOVE GRADE APPLICATIONS SHALL BE NEMA 3R RATED. PULLBOXES SHALL BE SIZED ACCORDING TO THE FOLLOWING:

CONDUIT SIZE	WIDTH	LENGTH	DEPTH	WIDTH INCREASE PER ADDITIONAL CONDUIT
1"	4"	16"	3"	2"
2"	6"	36"	4"	5"
3"	12"	48"	5"	6"
4"	15"	60"	8"	8"

FOR OTHER CONDUIT SIZES REFER TO ANSI/TIA-569-C TABLE 12. - LATEST PUBLISHED EDITION.

9. CONDUIT(S) SHALL EXIT A PULLBOX ON THE WALL OPPOSITE THE WALL ENTERED.
10. PROVIDE LABELING OF EACH CONDUIT PER GENERAL ELECTRICAL SPECIFICATIONS.
11. PROVIDE INTERNAL/EXTERNAL GAS AND WATER TIGHT MECHANICAL SEALING/PLUGGING OF EACH BUILDING ENTRY CONDUIT AS SPECIFIED ELSEWHERE IN THE DRAWINGS AND SPECIFICATIONS.

IDENTIFICATION STAMP
DIV. OF THE STATE ARCHITECT
APP: 02-118630 INC:
REVIEWED FOR
SS ☐ FLS ☐ ACS ☑
DATE: 04/13/2021

OFFICE OF THE STATE FIRE MARSHAL
APPROVED FIRE AND PANIC ONLY
Approval of this plan does not authorize or approve any omission or deviation from applicable regulations. Final approval is subject to field inspection. One set of approved plans shall be available on the project site at all times.
PERMIT NO: 28-N-2332-CP
REVIEWED BY: LEO CATAYLO, OSFM
DATE: 4/1/2021

GENERAL SERVICES
Department of General Services
State of California
Real Estate Services Division
Project Management & Development Branch
707 Third Street, Suite 4-105
West Sacramento, California 95605

NICHOLS MELBURG & ROSSETTO ARCHITECTS + ENGINEERS
300 Knollcrest Drive
Redding, CA. 96002
(530) 222-3300 (530) 222-3538 FAX
http://www.nmrdesign.com

Copyright © 2019
All ideas, designs, arrangements and plans indicated or represented by this drawing are owned by, and the property of, NICHOLS, MELBURG and ROSSETTO and were created, evolved and developed for use on, and in connection with, the specified project. None of such ideas, designs, arrangements or plans shall be used by, or disclosed to, any person, firm or corporation for any purpose whatsoever without the written permission of NICHOLS, MELBURG and ROSSETTO.

LICENSE STAMPS

REGISTERED PROFESSIONAL ENGINEER RAYMOND W. SINGLETON No. E15610 12/31/2021 ELECTRICAL STATE OF CALIFORNIA
Date Signed: 3/25/2021

CONSULTANT
tk1sc COLLABORATIVE
11870 Pierce Street, Suite 160
Riverside, California 92505
951.299.4160 www.tk1sc.com
Project Leader - Jerry Leonhardt
Electrical Lead - Reid Cordry
tk1sc Job #:2019-0228A

DRAWING STATUS
CONSTRUCTION DOCUMENTS

ISSUE

No.	Date	Description
1	10/20/2020	INITIAL PLAN REVIEW
2	01/22/2021	AGENCY RESUBMITTAL
3	03/22/2021	AGENCY RESUBMITTAL

If drawing is not 30" x 42" it is a reduced print

PROJECT
RESIDENTIAL CENTER, UKIAH: REPLACEMENT OF EXISTING RESIDENTIAL CENTER
440 EAST HILL ROAD
WILLITS, CALIFORNIA 95490
MENDOCINO COUNTY
CALIFORNIA CONSERVATION CORPS

Supervisor	Designed	Drawn
		Author

DSA Application No.
XX-XXXXX

SHEET TITLE
MEN'S HOUSING POWER AND SIGNAL PLAN

DGS Project Number: 000000000001826
NMR Project Number: 18-6456

Reference North
Sheet Scale: As indicated
Sheet Number: E201HM

ISSUE DATE
July 9, 2021

Plot Date: 3/22/2021 9:07:27 AM
File Name: BIM 360://CCC Willits Residential Center/E_CCC Willits_DORM-MEN_2019-0228A.rvt

KEYNOTES

2.022	PROVIDE 3/4"C.O.(S) TO RESPECTIVE CONTROL DEVICE(S) FOR CONTROL WIRING. REFER TO THE EQUIPMENT CONTROL WIRING DIAGRAMS FOR ADDITIONAL INFORMATION.
2.023	REFER TO MOTORIZED EQUIPMENT SCHEDULE FOR MOTOR FEEDER/ BRANCH CIRCUIT INFORMATION.
5.102	CONNECT AS REQUIRED TO COMBINATION SMOKE/FIRE DAMPER. REFER TO MECHANICAL DRAWINGS FOR EXACT LOCATIONS. CONTRACTOR TO PROVIDE CONTROL RELAY MODULE AT ASSOCIATED HVAC UNIT FOR IMMEDIATE UNIT SHUT DOWN UPON DAMPER CLOSURE PER CMC, SECTION 605.8.

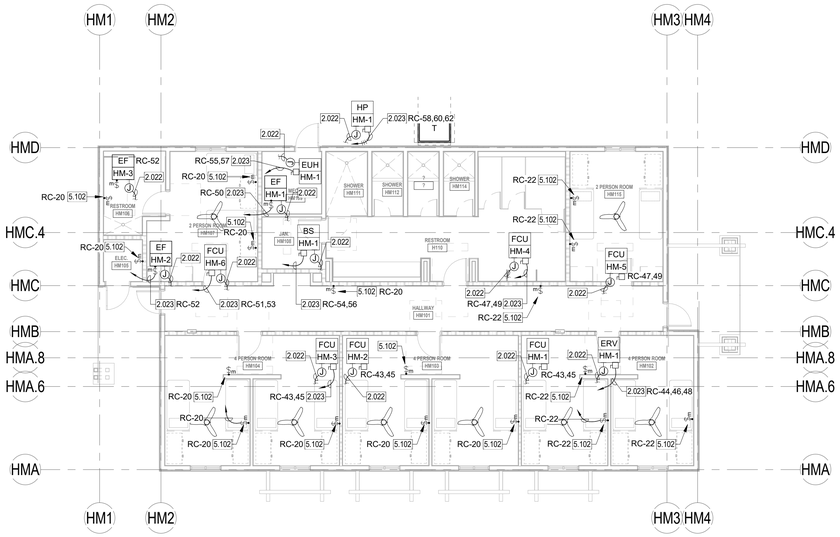

MEN'S HOUSING MECHANICAL POWER PLAN

SCALE: 1/8" = 1'-0"

WALL TYPE NOTES

PARTITION SYMBOL

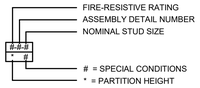

WALL TYPES LEGEND

SEE SHEET G121 FOR ASSEMBLY TYPES

EXTERIOR

2 x 6 WOOD STUD WALL - NON RATED	0-W1-6 * • #
2 x 12 WOOD STUD WALL - NON RATED	0-W1-12 * • #

INTERIOR

2 x 4 WOOD STUD WALL - NON RATED	0-W2-4 * • #
2 x 6 WOOD STUD WALL - NON RATED	0-W2-6 * • #
2 x 8 WOOD STUD WALL - NON RATED	0-W2-8 * • #
2 x 12 WOOD STUD WALL - NON RATED	0-W2-12 * • #
2 x 4 WOOD STUD WALL - ACOUSTIC	0-W5-4 * • #
2 x 6 WOOD STUD WALL - ACOUSTIC	0-W5-6 * • #
2 X 4 WOOD STUD WALL - 1-HR FIRE PARTITION W/ PROTECTED OPENINGS	1-W3-4 * • #
2 X 6 WOOD STUD WALL - 1-HR FIRE PARTITION W/ PROTECTED OPENINGS	1-W3-6 * • #

MOTORIZED EQUIPMENT SCHEDULE

TAG	ITEM	DESCRIPTION	EQUIPMENT RATING VOLTS	PH.	MOTOR HP	MOTOR FLA	VFD FLA	MCA	MOCP	DISC. SW. SIZE STARTER SIZE	CIRCUIT DATA CONDUIT - WIRE	SPECIFIC NOTES
BS	HM-1	BRANCH SELECTOR	208	1		0.5		0.6	15 A	30AS	3/4"C. - 2#12, 1#12 GRD.	A
EF	HM-1	EXHAUST FAN	115	1	.167	4.4		5.5	15 A	Motor Rated	3/4"C. - 2#12, 1#12 GRD.	A,C
EF	HM-2	EXHAUST FAN	115	1	.167	4.4		5.5	15 A	Motor Rated	3/4"C. - 2#12, 1#12 GRD.	A,C
EF	HM-3	EXHAUST FAN	115	1	.167	4.4		5.5	15 A	Motor Rated	3/4"C. - 2#12, 1#12 GRD.	A,C
ERV	HM-1	ENERGY RECOVERY VENTILATOR	208	3		3.7		4.6	15 A	30AS	3/4"C. - 2#12, 1#12 GRD.	A
EUH	HM-1	HEATING UNIT	208	1		12.7		15.9	20 A	30AS	3/4"C. - 2#12, 1#12 GRD.	A
FCU	HM-1	FAN COIL UNIT	208	1		1.1		1.4	15 A	30AS	3/4"C. - 2#12, 1#12 GRD.	A
FCU	HM-2	FAN COIL UNIT	208	1		0.5		0.6	15 A	30AS	3/4"C. - 2#12, 1#12 GRD.	A
FCU	HM-3	FAN COIL UNIT	208	1		1.1		1.4	15 A	30AS	3/4"C. - 2#12, 1#12 GRD.	A
FCU	HM-4	FAN COIL UNIT	208	1		1.2		1.5	15 A	30AS	3/4"C. - 2#12, 1#12 GRD.	A
FCU	HM-5	FAN COIL UNIT	208	1		0.5		0.6	15 A	30AS	3/4"C. - 2#12, 1#12 GRD.	A
FCU	HM-6	FAN COIL UNIT	208	1		0.5		0.6	15 A	30AS	3/4"C. - 2#12, 1#12 GRD.	A
HP	HM-1	HEAT PUMP	208	3		30.5		38.1	45 A	60AS	1"C. - 3#6, 1#8 GRD.	A

POWER PLAN GENERAL NOTES:

1. ALL RECEPTACLES ON COMMON WALLS SHALL BE SEPARATE BOXES AND OFFSET 24-INCHES MINIMUM.
2. ALL PENETRATIONS THROUGH FIRE RATED WALLS SHALL BE PROTECTED FROM THE SPREAD OF FIRE WITH AN APPROVED FIRESTOP SYSTEM EQUAL OR GREATER THAN THE FIRE RATING OF THE WALL.
3. ALL WALL-MOUNTED DEVICE HEIGHTS SHALL BE VERIFIED WITH THE ARCHITECT PRIOR TO ROUGH-IN.
4. ALL FURNITURE FEED LOCATIONS TO BE VERIFIED WITH ARCHITECT AND FURNITURE VENDOR PRIOR TO ROUGH-IN.
5. ALL FURNITURE WHIPS SHALL BE TRIMMED TO REDUCE EXCESS WHIP LENGTH.
6. WHEN EXPOSED CEILINGS OR OPEN GRID CONDITIONS OCCUR, THE CONTRACTOR WILL NEED TO PROVIDE THE FOLLOWING ITEMS:
   - ALL BRANCH CIRCUITS SHALL BE IN EMT.
   - ALL BRANCH CIRCUITS SHALL BE ROUTED NEATLY AND IN PARALLEL TO STRUCTURES OR DUCT WORK.
   - VISUALLY OBJECTIONABLE BRANCH CIRCUITS SHALL BE REROUTED AT THE REQUEST OF THE ARCHITECT AT NO ADDITIONAL COST.
7. EXPOSED CABLE/CONDUCTORS INSTALLED IN A PLENUM SPACE SHALL CONFORM TO NEC, OR CEC WHERE ADOPTED, ARTICLE 300.22(C).
8. PROVIDE G.F.C.I. TYPE RECEPTACLE(S) OR RECEPTACLE(S) PROTECTED BY A GFCI CIRCUIT BREAKER(S) WHEN LOCATED WITHIN 6 FEET OF ANY SINK OR THERAPEUTIC TUB, LAUNDRY AREA, SERVING ANY DRINKING FOUNTAIN OR VENDING MACHINE, WITHIN ANY KITCHEN SPACE AND/OR LOCATED OUTDOORS. WHERE RECEPTACLES ARE NOT READILY ACCESSIBLE, PROVIDE GFCI CIRCUIT BREAKER(S) TO PROTECT THE RESPECTIVE BRANCH CIRCUIT AND PROVIDE ADDITIONAL NEUTRAL CONDUCTORS IN THE BRANCH CIRCUITING AS REQUIRED TO ENSURE PROPER GFCI FUNCTION
9. PROVIDE OCCUPANCY SENSOR/LIGHTING CONTROL SYSTEM CONTROLLED RECEPTACLE RELAY(S) AS REQUIRED TO SWITCH CONTROLLED RECEPTACLES. CONNECT BRANCH CIRCUITRY AND CONTROL WIRING AS REQUIRED TO ALLOW OCCUPANCY SENSOR/LIGHTING CONTROL SYSTEM RELAY TO SWITCH STANDALONE AND/OR SYSTEMS FURNITURE CONTROLLED RECEPTACLES AS INDICATED ON PLANS. PROVIDE ADDITIONAL CONDUIT, WIRING AND PATHWAYS NECESSARY TO CONNECT BRANCH CIRCUITRY AND CONTROL WIRING TO REMOTE RELAYS TO INCLUDE RELAY(S) LOCATED ON ALTERNATE FLOORS, IN ELECTRICAL ROOMS, ETC.
10. UNLESS SPECIFICALLY SHOWN AS (E), (R), (ER), (D), EXISTING OR NON-BOLD, ALL ELECTRICAL DEVICES SHOWN ARE NEW.
11. PROVIDE REDUNDANT GROUND PATH IN ALL BRANCH CIRCUITS SERVING PATIENT CARE AREAS CONSISTING OF A SEPARATE, INSULATED EQUIPMENT GROUNDING CONDUCTOR PER NEC, OR CEC WHERE ADOPTED, ART 517.13.
12. CONTRACTOR SHALL PROVIDE CONDUIT AND WIRE FOR ALL DEVICES TO PANELBOARD(S) INDICATED ON PLANS FOR A COMPLETE AND OPERABLE SYSTEM.
13. CONTRACTOR SHALL PROVIDE MINIMUM 2#12, 1#12G IN ½" CONDUIT UNLESS OTHERWISE NOTED. REFERENCE WIRE SIZE TABLE CHART ABOVE. WHERE REQUIRED, CONDUIT AND WIRE SHALL BE UPSIZED TO MEET THE REQUIREMENT OF THE DEVICE BEING SERVED BY THE BRANCH CIRCUIT. WHERE CONDUIT AND WIRING IS INDICATED AT THE HOME RUN, WIRING AND CONDUIT SHALL CONTINUE AT THAT SIZE FOR THE ENTIRE LENGTH OF THE CIRCUIT.
14. CONTRACTOR SHALL FURNISH ADDITIONAL SWITCHLEGS OR HOT WIRES AS REQUIRED TO MEET THE CONTROL INTENT OF THE DOCUMENTS AND AS REQUIRED BY CODE (I.E. EMERGENCY LIGHTING AND SWITCHED RECEPTACLES).
15. MULTIPLE CIRCUITS MAY BE USED IN A SINGLE RACEWAY. NO MORE THAN (3) DEDICATED CIRCUITS OR (4) CURRENT CARRYING CONDUCTORS SHALL BE INSTALLED IN ANY RACEWAY UNLESS OTHERWISE NOTED. WHERE A COMMON GROUNDED CONDUCTOR IS USED FOR MULTIPLE INDIVIDUAL BRANCH CIRCUITS, PER SECTIONS CEC 200.4, 250.122, 310.15(B)(2). CONDUIT SIZE SHALL BE INCREASED AS REQUIRED FOR THE CONDUCTORS INCLUDING TEMPERATURE DERATING PER CEC TABLE C1.
16. FURNISH AND INSTALL JUNCTION BOXES AS REQUIRED TO MEET MAXIMUM BEND REQUIREMENTS FOR PULLING WIRES PER CEC 358.26. JUNCTION BOXES SHALL BE SIZED AS REQUIRED PER CEC 314.28 UNLESS OTHERWISE NOTED.

MOTORIZED EQUIPMENT SCHEDULE GENERAL NOTES:

1. ALL BRANCH CIRCUIT DATA IS BASED UPON METALLIC CONDUITS. IF THE CONTRACTOR ELECTS TO USE NONMETALLIC CONDUITS, AN EQUIPMENT GROUNDING CONDUCTOR SHALL BE INSTALLED PER NEC, OR CEC WHERE ADOPTED, TABLE 250.122 AND THE CONDUIT SIZE SHALL BE INCREASED ACCORDINGLY.
2. ELECTRICAL CONTRACTOR SHALL REFER TO ALL DOCUMENTS RELATED TO THE EQUIPMENT (I.E. SHOP DRAWINGS, CONSTRUCTION DOCUMENTS, ETC.) IN REGARDS TO ELECTRICAL CHARACTERISTICS OF ALL EQUIPMENT LISTED IN THE SCHEDULE. ANY MODIFICATION AND/OR ADDITIONAL WORK NECESSARY SHALL BE INCLUDED IN THE BASE BID.
3. ELECTRICAL CONTRACTOR SHALL CHECK THE ROTATION OF ALL THREE PHASE MOTORS AND CORRECT THE ROTATION IF REVERSED.
4. ELECTRICAL CONTRACTOR SHALL PROVIDE FUSES SIZED PER THE EQUIPMENT NAMEPLATE INFORMATION.
5. DISCONNECT SWITCHES SHALL BE HEAVY DUTY TYPE, EXTERNALLY OPERATED, QUICK MAKE QUICK BREAK AND SHALL BE FUSIBLE OR NON FUSIBLE AS INDICATED. A MAXIMUM VOLTAGE, CURRENT AND HORSEPOWER SHALL BE CLEARLY MARKED ON SWITCH ENCLOSURE. SWITCHES HAVING DUAL RATINGS (HIGHER RATINGS WHEN USED WITH DUAL ELEMENT FUSES) SHALL HAVE RATINGS INDICATED ON METAL PLATES RIVETED OR OTHERWISE PERMANENTLY ATTACHED TO THE ENCLOSURE. WHEN INDICATED, TOGGLE SWITCHES SHALL BE MOTOR RATED FOR THE APPLICATION.
6. STARTERS SHALL BE FULL VOLTAGE, REDUCED VOLTAGE OR COMBINATION DISCONNECT AND STARTER, WITH CONTROL VOLTAGE AS REQUIRED, AS INDICATED ON THE DOCUMENTS RELATED TO THE EQUIPMENT, SUCH AS SHOP DRAWINGS, CONSTRUCTION DOCUMENTS, ETC. STARTERS SHALL INCLUDE MOTOR OVERLOAD PROTECTION, PHASE LOSS AND PHASE UNBALANCE PROTECTION AS REQUIRED.
7. ALL TERMINATIONS AND ENCLOSURES SHALL BE RATED FOR USE WITH 75 DEGREE C CONDUCTORS.
8. COMPLETE INSTALLATION SHALL CONFORM TO THE REQUIREMENTS OF NEC (OR CEC WHERE ADOPTED) ARTICLES 430 AND 440.
9. CONTRACTOR TO COORDINATE WITH ALL OTHER PROJECT TRADES AND WITH OWNER/ TENANT FOR TO OBTAIN RESPECTIVE EQUIPMENT SCCR AND PROVIDE APPROPRIATE PROTECTIVE DEVICES TO LIMIT AVAILABLE FAULT CURRENT TO LESS THAN THE EQUIPMENT NAMEPLATE SCCR PER NEC (OR CEC WHERE ADOPTED) 110.10. SEE POWER SYSTEM STUDY SPECIFICATIONS FOR ADDITIONAL REQUIREMENTS.
10. UNLESS OTHERWISE NOTED, MOCP VALUES FOR VFD-EQUIPPED DEVICE ARE SIZED PER NEC (OR CEC WHERE ADOPTED) 430.130(A).1. CONTRACTOR SHALL COORDINATE WITH ALL OTHER PROJECT TRADES AND WITH OWNER/ TENANT (IF PROVIDING EQUIPMENT ON PROJECT) TO OBTAIN NAMEPLATE VFD-EQUIPPED DEVICE MOCP VALUE FROM MANUFACTURER INSTALLATION INSTRUCTIONS AND PROVIDE APPROPRIATE PROTECTIVE DEVICES TO COMPLY WITH NEC (OR CEC WHERE ADOPTED) 430.130(A).2.

MOTORIZED EQUIPMENT SCHEDULE SPECIFIC NOTES:

A. FUSED AS RECOMMENDED BY MANUFACTURER.

B. MAGNETIC MOTOR STARTER WITH CONTROL TRANSFORMER, AUXILIARY CONTACTS, INDICATOR LIGHT AND H.O.A. SWITCH - VERIFY CONTROL TRANSFORMER VOLTAGE WITH M.C. PRIOR TO ORDERING MATERIAL.

C. ROUTE THROUGH LINE VOLTAGE CONTROL. SEE MECHANICAL AND/OR PLUMBING PLANS FOR ADDITIONAL REQUIREMENTS.

D. VERIFY LOCATION WITH PLUMBING PLANS PRIOR TO ROUGH-IN. CONNECT TO AQUASTAT AND TIME CLOCK AS REQUIRED.

E. REMOTE VFD. PROVIDE EARLY BREAK CONTACTS ON ANY DISCONNECT SWITCHES REQUIRED BY CODE OR SHOWN ON PLANS THAT ARE DOWNSTREAM OF THE REMOTE VFD. PROVIDE CONDUIT AND CONDUCTORS AS REQUIRED TO INTERCONNECT THE CONTACT WITH VFD "ENABLE" TERMINALS. REFER TO MECHANICAL AND/OR PLUMBING PLANS FOR LOCATION. PROVIDE FEEDER(S) TO CONNECT REMOTE VFD AND MOTOR(S) AS REQUIRED.

F. INTEGRAL VFD PROVIDED WITH EQUIPMENT. REFER TO MECHANICAL AND/OR PLUMBING PLANS FOR LOCATION. CONNECT TO VFD AS REQUIRED.

G. INTEGRAL DISCONNECT PROVIDED WITH EQUIPMENT. REFER TO MECHANICAL AND/OR PLUMBING PLANS FOR LOCATION. CONNECT TO INTEGRAL DISCONNECT AS REQUIRED.

H. INTEGRAL DISCONNECT PROVIDED WITH VFD. REFER TO MECHANICAL AND/OR PLUMBING PLANS FOR LOCATION. CONNECT TO INTEGRAL DISCONNECT AS REQUIRED.

J. INDOOR UNIT POWERED FROM RESPECTIVE OUTDOOR UNIT, PROVIDE POWER AND CONTROL WIRING AS REQUIRED.

K. ROUTE THROUGH LINE VOLTAGE CONTROL FOR KITCHEN HOOD FIRE SUPPRESSION SYSTEM. SEE MECHANICAL, FIRE ALARM AND FOOD SERVICE PLANS FOR ADDITIONAL REQUIREMENTS.

IDENTIFICATION STAMP
DIV. OF THE STATE ARCHITECT
APP: 02-118630 INC:
REVIEWED FOR
SS ☐ FLS ☐ ACS ☑
DATE: 04/13/2021

OFFICE OF THE STATE FIRE MARSHAL
APPROVED FIRE AND PANIC ONLY
Approval of this plan does not authorize or approve any omission or deviation from applicable regulations. Final approval is subject to field inspection. One set of approved plans shall be available on the project site at all times.
PERMIT NO.: 26 N 2332-CP
REVIEWED BY: LEO CATALYLO, OSFM
DATE: 4 / /2021

DGS GENERAL SERVICES
Department of General Services
State of California
Real Estate Services Division
Project Management & Development Branch
707 Third Street, Suite 4-105
West Sacramento, California 95605

NICHOLS MELBURG & ROSSETTO ARCHITECTS + ENGINEERS
300 Knollcrest Drive
Redding, CA. 96002
(530) 222-3300 (530) 222-3538 FAX
http://www.nmrdesign.com

Copyright © 2019
All ideas, designs, arrangements and plans indicated or represented by this drawing are owned by, and the property of, NICHOLS, MELBURG and ROSSETTO and were created, evolved and developed for use on, and in connection with, the specified project. None of such ideas, designs, arrangements or plans shall be used by, or disclosed to, any person, firm or corporation for any purpose whatsoever without the written permission of NICHOLS, MELBURG and ROSSETTO.

LICENSE STAMPS

REGISTERED PROFESSIONAL ENGINEER RAYMOND W. SIMES No. E15610 12/31/2021 ELECTRICAL STATE OF CALIFORNIA
Date Signed: 3/25/2021

CONSULTANT
tk1sc COLLABORATIVE
11870 Pierce Street, Suite 160
Riverside, California 92505
951.299.4160 www.tk1sc.com
Project Leader - Jerry Leonhardt
Electrical Lead - Reid Cordry
tk1sc Job #:2019-0228A

DRAWING STATUS
CONSTRUCTION DOCUMENTS

ISSUE

No.	Date	Description
1	10/20/2020	INITIAL PLAN REVIEW
2	01/22/2021	AGENCY RESUBMITTAL
3	03/22/2021	AGENCY RESUBMITTAL

If drawing is not 30" x 42" it is a reduced print

PROJECT
RESIDENTIAL CENTER, UKIAH: REPLACEMENT OF EXISTING RESIDENTIAL CENTER
440 EAST HILL ROAD
WILLITS, CALIFORNIA 95490
MENDOCINO COUNTY
CALIFORNIA CONSERVATION CORPS

Supervisor	Designed	Drawn
		Author

DSA Application No.
XX-XXXXXX

SHEET TITLE
MEN'S HOUSING MECHANICAL POWER PLAN

DGS Project Number: 0000000000001826
NMR Project Number: 18-6456

Reference North
Sheet Scale: As indicated
Sheet Number: E301HM

ISSUE DATE
July 9, 2021

Plot Date: 3/23/2021 3:50:58 PM
File Name: BIM 360://CCC Willits Residential Center/E_CCC Willits_DORM-MEN_2019-0228A.rvt

PANEL: RC (TYPICAL FOR RA AND RB)

MOUNTING: Surface
NEMA 3R: No
FEED THRU: No
M.L.O.: No

DOUBLE-LUGS: No
200% NEUTRAL: No
I/G BUS: No

VOLTS: 120/208 Wye
PHASE: 3
WIRE: 4
AIC: 10,000

SUPPLY FROM: DBH
LOCATION: ELEC. HM105
MCB: 150A-3P
BUS: 225A

NOTE	DESCRIPTION	BKR	POLE	TYPE	CIRC	A		B		C		CIRC	TYPE	POLE	BKR	DESCRIPTION	NOTE
	R Room HM106, HM105	20 A	1	R	1	360	180					2	R	1	20 A	R EXTERIOR	
	R 2 PERSON ROOM HM107	20 A	1	R	3			540	540			4	R	1	20 A	R 4 PERSON ROOM HM104	
	R Room HM108, HM109, H110	20 A	1	R	5					540	360	6	R	1	20 A	R 4 PERSON ROOM HM104	
	R 2 PERSON ROOM HM115	20 A	1	R	7	540	540					8	R	1	20 A	R 4 PERSON ROOM HM103	
	R HALLWAY HM101	20 A	1	R	9			180	360			10	R	1	20 A	R 4 PERSON ROOM HM103	
	R HALLWAY HM101	20 A	1	R	11					540	540	12	R	1	20 A	R 4 PERSON ROOM HM102	
	P RESTROOM HM106 HAND DRYER	20 A	1	P	13	1000	360					14	R	1	20 A	R 4 PERSON ROOM HM102	
	P RESTROOM H110 HAND DRYER	20 A	1	P	15			1000	180			16	R	1	20 A	R EXTERIOR	
	P RESTROOM H110 HAND DRYER	20 A	1	P	17					1000	100	18	P	1	20 A	ELECTRIC TRAP PRIMER	
	R ELEC. HM105	30 A	1	R	19	1000	800					20	M	1	20 A	M 4 PERSON ROOM HM104	
	FCU LIGHTS	20 A	1	L R	21			579	800			22	M	1	20 A	M 4 PERSON ROOM HM102	
	FCU LIGHTS	20 A	1	L R	23					579	0	24	--	1	20 A	SPARE	
	SPARE	20 A	1	--	25	0	0					26	--	1	20 A	SPARE	
--	SPACE	--	--	--	27			0	0			28	--	--	--	SPACE	--
--	SPACE	--	--	--	29					0	0	30	--	--	--	SPACE	--
					31							32					
					33							34					
					35							36					
	EHW HM-1	30 A	2	P	37	2500	612					38	L	1	20 A	Room HM106, HM109, HM108, HM111, HM112,...	
--	--	--	--	--	39			2500	562			40	L	1	20 A	L Room HM102, HM103, HM104, HM101	
	EWH BOOSTER FAN	20 A	1	P	41					150	80	42	L	1	20 A	L EXTERIOR	H
	M FCU HM-1, HM-2, HM-3	20 A	2	M	43	280	443					44	M	3	15 A	ERV HM-1	
--	--	--	--	--	45			280	443			46	--	--	--	--	--
	M FCU HM-4, HM-5	20 A	2	M	47					175	443	48	--	--	--	--	--
--	--	--	--	--	49	175	510					50	M	1	15 A	M EF HM-1	
	M FCU HM-6	15 A	2	M	51			50	1020			52	M	1	20 A	M EF HM-2, HM-3	
--	--	--	--	--	53					50	50	54	M	2	15 A	M BS HM-1	
	M EUH HM-1	20 A	2	M	55	1325	50					56	--	--	--	--	--
--	--	--	--	--	57			1325	3660			58	M	3	45 A	M HP HM-1	
	P CLG FANS	20 A	1	P	59					150	3660	60	--	--	--	--	--
	P CLG FANS	20 A	1	P	61	90	3660					62	--	--	--	--	--
	SPARE	20 A	1	--	63			0	0			64	--	1	20 A	SPARE	
--	SPACE	--	--	--	65					0	0	66	--	--	--	SPACE	--
				PHASE TOTALS:		14425.33 VA		14019.33 VA		8417.33 VA							
						127.4 A		124.0 A		70.1 A							

COMMENTS:

LOAD TYPE KEY	LOAD CLASSIFICATION	CONNECTED LOAD	AVG. DEMAND...	ESTIMATED DEMAND	PANEL TOTALS	AMPS	KVA
H = HVAC EQUIP	P	8.49 kVA	100.00%	8.49 kVA			
K = KITCHEN	R	7.84 kVA	100.00%	7.84 kVA	TOTAL CONNECTED LOAD:	102.3 A	36.86 kVA
L = LIGHTING	L	1.33 kVA	125.00%	1.67 kVA	TOTAL DEMAND LOAD:	110.9 A	39.94 kVA
M = MOTOR	M	19.20 kVA	114.30%	21.95 kVA	HIGH PHASE:	127 A	14.43 kVA
P = POWER							
R = RECEPTACLE							
W = WATER HEATER							

PANEL SCHEDULE SPECIFICATIONS:

1. WHERE PANEL IS INDICATED TO INCLUDE FEED THRU LUGS, PROVIDE FEED THROUGH LUGS AT THE OPPOSITE END OF THE PANELBOARD FROM THE PANELBOARD MAIN LUGS.
2. WHERE PANEL IS INDICATED TO INCLUDE DOUBLE LUGS, PROVIDE A DOUBLE LUG KIT AT THE SAME END OF THE PANELBOARD AS THE PANELBOARD MAIN LUGS.
3. WHERE PANEL IS INDICATED TO INCLUDE 200% NEUTRAL, PROVIDE PANELBOARDS UL LISTED AS HAVING NEUTRAL BUSSES RATED TO CARRY 200 PERCENT OF THE CURRENT CARRYING CAPACITY OF THE PHASE BUSSING. OTHERWISE, NEUTRAL BUSSING TO BE FULL SIZE AND RECTANGULAR.
4. WHERE PANEL IS INDICATED TO INCLUDE AN I/G BUS, PROVIDE PANELBOARDS WITH AN ISOLATED GROUND BUS, DRILLED AND TAPPED FOR NUMBER OF ISOLATED GROUND CONDUCTORS SHOWN, AS WELL AS FOR ALL SPARES AND SPACES SHOWN ON THE PANELBOARD.
5. WHERE PANEL CIRCUIT BREAKER RATING IS SHOWN AS SERIES RATED, PROVIDE CIRCUIT BREAKERS IN PANELBOARD WHICH ARE SERIES RATED WITH THE UPSTREAM SYSTEM FOR THE AVAILABLE FAULT CURRENT. THE PANELBOARD SHALL BE MARKED WITH THE SERIES CONNECTED RATINGS, AS WELL AS ALL MARKING AS REQUIRED BY THE NEC, OR CEC WHERE ADOPTED, 240-83(C).
6. WHERE PANEL IS INDICATED AS RECESSED OR FLUSH MOUNTED, PROVIDE SPARE CONDUITS STUBBED UP INTO THE ACCESSIBLE CEILING SPACE. PROVIDE ONE (1) 3/4" CONDUIT ONLY FOR EACH THREE (3) SPARES OR SPACES, MINIMUM OF TWO (2). EACH CONDUIT SHALL BE TAGGED, CAPPED AND MARKED FOR FUTURE USE.
7. ALL BUSSING SHALL BE TIN PLATED ALUMINUM.
8. ALL CIRCUIT BREAKERS USED AS SWITCHES SHALL BE UL LISTED AND LABELED "SWD" FOR SWITCHING DUTY.
9. PROVIDE BREAKER INTERLOCK WITH ADJACENT BREAKER(S) FOR ANY MULTI-WIRE BRANCH CIRCUIT. BREAKER INTERLOCK GROUPING SHALL BE BY BRANCH CIRCUIT GROUP (i.e. MULTIPLE CIRCUITS SHARING A COMMON NEUTRAL (NEC, OR CEC WHERE ADOPTED, 210.4 (B).) COMMON YOKE (NEC, OR CEC WHERE ADOPTED, 210.7(B) .) OR FURNITURE SYSTEM NEC OR CEC WHERE ADOPTED, 605.6 AND 605.7). WHERE AN EXISTING PANEL IS BEING ALTERED OR MODIFIED IN ANY WAY, CONTRACTOR SHALL INCLUDE ALL COSTS IN BASE BID TO ADD BREAKER INTERLOCKS TO EXISTING MULTI-WIRE BRANCH CIRCUITS BASED ON CONTRACTOR'S INVESTIGATION OF EXISTING CONDITIONS.
10. PROVIDE BREAKER LOCK OFF DEVICE ON ANY CIRCUIT BREAKER FEEDING A TRANSFORMER AS REQUIRED, PER NEC, OR CEC WHERE ADOPTED, 450.14. WHERE AN EXISTING PANEL IS BEING ALTERED OR MODIFIED IN ANY WAY, CONTRACTOR SHALL INCLUDE ALL COSTS IN BASE BID TO ADD BREAKER LOCK-OFF DEVICES TO EXISTING TRANSFORMER CIRCUIT BREAKERS BASED ON CONTRACTOR'S INVESTIGATION OF EXISTING CONDITIONS.
11. ALL CIRCUIT BREAKERS SHALL BE BOLT-ON TYPE AND SHALL BE SUITABLE FOR 75 DEGREE AMPACITY CONDUCTORS.
12. PANELS SHALL BE OF THE DEAD FRONT SAFETY TYPE. PANELS SHALL BE MINIMUM 20" WIDE AND 5-3/4" DEEP UNLESS OTHERWISE NOTED ON PLAN.
13. COORDINATE WITH APPLICABLE TRADE TO INSURE RECESSED MOUNTED PANELBOARDS WILL SEAT FLUSH IN THE WALLS PROVIDED. PANEL TRIMS SHALL HAVE CONCEALED DOORS AND FASTENERS WITH FLUSH TYPE COMBINATION LOCK AND CATCH, TWO MILLED TYPE KEYS SUPPLIED WITH EACH PANEL. ALL LOCKS SHALL BE KEYED ALIKE AND EACH DOOR SHALL HAVE A PLASTIC COVERED DIRECTORY FRAME WITH A TYPED IDENTIFICATION CARD OF ALL CIRCUIT AND PANEL NUMBERS FOR BRANCH CIRCUIT PANELBOARDS.
14. UPON PROJECT COMPLETION, CONTRACTOR SHALL INSTALL TYPED AS-BUILT PANEL DIRECTORIES IN EACH PANEL WITHIN THE MFGR-PROVIDED DIRECTORY HOLDER. THE DIRECTORY SHALL CLEARLY IDENTIFY EACH CIRCUIT TO ITS CLEAR, EVIDENT, AND SPECIFIC PURPOSE OR USE. EACH CIRCUIT IDENTITY SHALL INCLUDE SUFFICIENT DETAIL TO ALLOW EACH CIRCUIT TO BE DISTINGUISHED FROM ALL OTHERS PER NEC, OR CEC WHERE ADOPTED, ART 408.1 AND 408.4 . HANDWRITTEN DIRECTORIES ARE UNACCEPTABLE. COPIES OF AS-BUILT PANEL SCHEDULES SHALL BE PLACED IN PANEL DIRECTORIES. E.C. TO INCLUDE ALL COSTS REQUIRED FOR LARGER-THAN-STANDARD CUSTOM PANEL DIRECTORY HOLDERS TO ACCOMMODATE COPIES OF AS-BUILT PANEL SCHEDULES.
15. PANELBOARDS SHALL BE MANUFACTURED BY G.E., CUTLER-HAMMER, SIEMENS, OR SQUARE "D". FUSED PANEL BOARDS SHALL BE BY COOPER BUSSMANN.
16. PROVIDE SHOP DRAWING SUBMITTAL PER THE ELECTRICAL SPECIFICATION SUBMITTAL REQUIREMENTS FOR EACH PANEL DEPICTING CONFORMANCE WITH THE ABOVE NOTES AND SCHEDULES.

SPECIFIC PANEL SCHEDULE NOTES:

"A" PROVIDE LOCK-ON DEVICE.
"B" PROVIDE LOCK-OFF DEVICE.
"C" PROVIDE SHUNT TRIP DEVICE.
"D" PROVIDE GFCI TYPE DEVICE.
"E" PROVIDE A RED CIRCUIT BREAKER.
"F" PROVIDE A NEW BREAKER TO MATCH THE EXISTING IN PANEL.
"G" EXISTING BREAKER WITH NEW LOAD.
"H" PROVIDE RELAY AS REQUIRED FOR CONTROL OF EXTERIOR LIGHTING BY PHOTOCELL ON / TIMECLOCK OFF. MOUNT RELAY IN SEPARATE BARRIERED COMPARTMENT OF PANELBOARD.

PANEL SCHEDULE INDEX

XXXX	XXXX	RC
XXXX	XXXX	XXXX
XXXX	XXXX	XXXX

IDENTIFICATION STAMP
DIV. OF THE STATE ARCHITECT
APP: 02-118630 INC:
REVIEWED FOR
SS ☐ FLS ☐ ACS ☑
DATE: 04/13/2021

OFFICE OF THE STATE FIRE MARSHAL
APPROVED FIRE AND PANIC ONLY
Approval of this plan does not authorize or approve any omission or deviation from applicable regulations. Final approval is subject to field inspection. One set of approved plans shall be available on the project site at all times.
PERMIT NO.: 20 N 2532 CP
REVIEWED BY: LEO CATALLO, OSFM
DATE: 4 / 8 / 2021

GENERAL SERVICES
Department of General Services
State of California
Real Estate Services Division
Project Management & Development Branch
707 Third Street, Suite 4-105
West Sacramento, California 95605

NICHOLS MELBURG & ROSSETTO
ARCHITECTS + ENGINEERS
300 Knollcrest Drive
Redding, CA. 96002
(530) 222-3300 (530) 222-3538 FAX
http://www.nmrdesign.com

Copyright © 2019
All ideas, designs, arrangements and plans indicated or represented by this drawing are owned by, and the property of, NICHOLS, MELBURG and ROSSETTO and were created, evolved and developed for use on, and in connection with, the specified project. None of such ideas, designs, arrangements or plans shall be used by, or disclosed to any person, firm or corporation for any purpose whatsoever without the written permission of NICHOLS, MELBURG and ROSSETTO.

LICENSE STAMPS

REGISTERED PROFESSIONAL ENGINEER
RAYMOND W. SWEETEN
No. E15610
12/31/2021
ELECTRICAL
STATE OF CALIFORNIA
Date Signed
3/25/2021

CONSULTANT
tklsc COLLABORATIVE
11870 Pierce Street, Suite 160
Riverside, California 92505
951.299.4160 www.tk1sc.com
Project Leader - Jerry Leonhardt
Electrical Lead - Reid Cordry
tk1sc Job #:2019-0228A

DRAWING STATUS
CONSTRUCTION DOCUMENTS

ISSUE

No.	Date	Description
1	10/20/2020	INITIAL PLAN REVIEW
2	01/22/2021	AGENCY RESUBMITTAL
3	03/22/2021	AGENCY RESUBMITTAL

If drawing is not 30" x 42" it is a reduced print

PROJECT
RESIDENTIAL CENTER, UKIAH: REPLACEMENT OF EXISTING RESIDENTIAL CENTER
440 EAST HILL ROAD
WILLITS, CALIFORNIA 95490
MENDOCINO COUNTY
CALIFORNIA CONSERVATION CORPS

Supervisor	Designed	Drawn
		Author

DSA Application No.
XX-XXXXXX

SHEET TITLE
MEN'S HOUSING
PANEL SCHEDULES

DGS Project Number: 000000000001826
NMR Project Number: 18-6456

Reference North: NORTH
Sheet Scale: 12" = 1'-0"
Sheet Number: E407HM

ISSUE DATE
July 9, 2021

Plot Date: 3/22/2021 3:51:01 PM
File Name: BIM 360:/CCC Willits Residential Center/E_CCC Willits_DORM-MEN_2019-0228A.rvt

STATE OF CALIFORNIA
Indoor Lighting
NRCC-LTI-E
CALIFORNIA ENERGY COMMISSION

CERTIFICATE OF COMPLIANCE			**NRCC-LTI-E**
Project Name:	Replacement of Existing Residential Center	**Report Page:**	**(Page 6 of 7)**
Project Address:	440 East Hill Road	**Date Prepared:**	10/20/2020

U. DECLARATION OF REQUIRED CERTIFICATES OF ACCEPTANCE

Selections have been made based on information provided in this document. If any selection have been changed by the permit applicant, an explanation should be included in Table E. Additional Remarks. These documents must be provided to the building inspector during construction and any with "-A" in the form name must be completed through an Acceptance Test Technician Certification Provider (ATTCP). For more information visit: http://www.energy.ca.gov/title24/attcp/providers.html

Yes	No	Form/Title	Field Inspector Pass	Field Inspector Fail
●	○	NRCA-LTI-02-A - Must be submitted for occupancy sensors and automatic time switch controls.	☐	☐
○	●	NRCA-LTI-03-A - Must be submitted for automatic daylight controls.	☐	☐
●	○	NRCA-LTI-04-A - Must be submitted for demand responsive lighting controls.	☐	☐
○	●	NRCA-LTI-05-A - Must be submitted for institutional tuning power adjustment factor (PAF)	☐	☐

Registration Number: | Registration Date/Time: | Registration Provider: EnergySoft

CA Building Energy Efficiency Standards - 2019 Nonresidential Compliance | Report Version: 2019.0.001 Schema Version: rev 20190401 | Report Generated: 2020-10-20 09:11:49

STATE OF CALIFORNIA
Indoor Lighting
NRCC-LTI-E
CALIFORNIA ENERGY COMMISSION

CERTIFICATE OF COMPLIANCE			**NRCC-LTI-E**
Project Name:	Replacement of Existing Residential Center	**Report Page:**	**(Page 7 of 7)**
Project Address:	440 East Hill Road	**Date Prepared:**	10/20/2020

DOCUMENTATION AUTHOR'S DECLARATION STATEMENT

Documentation Author Name: Ray Swartz	Documentation Author Signature:
Company: tk1sc	Signature Date: 2020-10-20
Address: 11870 Pierce Street, Suite 160	CEA/ HERS Certification Identification (if applicable):
City/State/Zip: Riverside CA 92505	Phone: 951-299-4160

RESPONSIBLE PERSON'S DECLARATION STATEMENT

I certify the following under penalty of perjury, under the laws of the State of California:

1. The information provided on this Certificate of Compliance is true and correct.
2. I am eligible under Division 3 of the Business and Professions Code to accept responsibility for the building design or system design identified on this Certificate of Compliance (responsible designer)
3. The energy features and performance specifications, materials, components, and manufactured devices for the building design or system design identified on this Certificate of Compliance conform to the requirements of Title 24, Part 1 and Part 6 of the California Code of Regulations.
4. The building design features or system design features identified on this Certificate of Compliance are consistent with the information provided on other applicable compliance documents, worksheets, calculations, plans and specifications submitted to the enforcement agency for approval with this building permit application.
5. I will ensure that a completed signed copy of this Certificate of Compliance shall be made available with the building permit(s) issued for the building, and made available to the enforcement agency for all applicable inspections. I understand that a completed signed copy of this Certificate of Compliance is required to be included with the documentation the builder provides to the building owner at occupancy.

Responsible Designer Name: Ray Swartz	Responsible Designer Signature:
Company: tk1sc	Date Signed: 2020-10-20
Address: 11870 Pierce Street, Suite 160	License: E15610
City/State/Zip: Riverside CA 92505	Phone: 951-299-4160

Registration Number: | Registration Date/Time: | Registration Provider: EnergySoft

CA Building Energy Efficiency Standards - 2019 Nonresidential Compliance | Report Version: 2019.0.001 Schema Version: rev 20190401 | Report Generated: 2020-10-20 09:11:14

STATE OF CALIFORNIA
Indoor Lighting
NRCC-LTI-E
CALIFORNIA ENERGY COMMISSION

CERTIFICATE OF COMPLIANCE			**NRCC-LTI-E**
Project Name:	Replacement of Existing Residential Center	**Report Page:**	**(Page 3 of 7)**
Project Address:	440 East Hill Road	**Date Prepared:**	10/20/2020

F. INDOOR LIGHTING FIXTURE SCHEDULE

3	3 - LED Strieplight 4'	No	No	16	JA8 Lamp	3	No	48	☐	☐
7	7 - LED Surface - Shower	No	No	12	JA8 Lamp	8	No	96	☐	☐
9	9 - Recessed LED Downlight	No	No	10.9	JA8 Lamp	28	No	305.2	☐	☐
								Total Designed Watts: CONDITIONED SPACES	1,232.5	

[1]FOOTNOTE: Design Watts for small aperture and color changing luminaires which qualify per §140.6(a)Hâ is adjusted to be 75% of their rated wattage. Table F automatically makes this adjustment, the permit applicant should enter full rated wattage in column 05.

G. MODULAR LIGHTING SYSTEMS

This section does not apply to this project.

H. INDOOR LIGHTING CONTROLS (Not including PAFs)

*This table includes lighting controls for conditioned and unconditioned spaces. When an control having a * is shown, the notes section of this table provides more detail on how compliance is achieved. The lighting controls section of the Compliance Summary Table on the first page will show "DOES NOT COMPLY" if the notes are left blank.*

Building Level Controls

01	02	03 Field Inspector Pass	03 Field Inspector Fail
Mandatory Demand Response §110.12(c)	Shut-off controls §130.1(c)		
Required 10,000 SF	Whole Building Auto Time Switch	☐	☐

Area Level Controls

04	05	06	07	08	09	10	11	12 Field Inspector Pass	12 Field Inspector Fail
Area Description	Complete Building or Area Category Primary Function Area	Area Controls §130.1(a)	Multi-Level Controls §130.1(b)	Shut-Off Controls §130.1(c)	Primary/Sky lit Daylighting §130.1(d)*	Secondary Daylighting §140.6(d)	Interlocked Systems §140.6(a)1		
							13	Plan Sheet Showing Daylit Zones:	

*NOTES: Controls with a * require a note in the space below explaining how compliance is achieved.
EX: Conference 1: Primary/Skylight Daylighting: Exempt because less than 120 watts of general lighting; EXCEPTION 1 to §130.1(d)2

Registration Number: | Registration Date/Time: | Registration Provider: EnergySoft

CA Building Energy Efficiency Standards - 2019 Nonresidential Compliance | Report Version: 2019.0.001 Schema Version: rev 20190401 | Report Generated: 2020-10-20 09:11:14

STATE OF CALIFORNIA
Indoor Lighting
NRCC-LTI-E
CALIFORNIA ENERGY COMMISSION

CERTIFICATE OF COMPLIANCE			**NRCC-LTI-E**
Project Name:	Replacement of Existing Residential Center	**Report Page:**	**(Page 4 of 7)**
Project Address:	440 East Hill Road	**Date Prepared:**	10/20/2020

I. LIGHTING POWER ALLOWANCE: COMPLETE BUILDING OR AREA CATEGORY METHODS

Each area complying using the Complete Building or Area Category Methods per §140.6(b) are included in this table. Column 06 indicates if additional lighting power allowances per §140.6(c) or adjustments per §140.6(g) are being used .

Conditioned Spaces

01 Area Description	02 Complete Building or Area Category Primary Function Area	03 Allowed Density (W/ft²)	04 Area (ft²)	05 Allowed Wattage (Watts)	06 Additional Allowance / Adjustment: Area Category	06 Additional Allowance / Adjustment: PAF
Restroom	Restrooms	0.65	562	365.3	No	No
Elec/Mech/Riser	Electrical Mechancial Telephone Room	0.4	91	36.4	No	No
Corridor	Corridor Area	0.6	391	234.6	No	No
Storage/Other	All Other Space Types	0.4	53	21.2	No	No
Dorms / Bedrooms	All Other Space Types	0.4	1,556	622.4	No	No
			TOTALS:	2,653	1,279.9	See Tables J, or P for detail

J. ADDITIONAL ALLOWANCE: AREA CATEGORY METHOD QUALIFYING LIGHTING SYSTEM

This section does not apply to this project.

K. TAILORED METHOD GENERAL LIGHTING POWER ALLOWANCE

This section does not apply to this project.

L. ADDITIONAL LIGHTING ALLOWANCE: TAILORED WALL DISPLAY

This section does not apply to this project.

M. ADDITIONAL LIGHTING ALLOWANCE: TAILORED FLOOR AND TASK LIGHTING

This section does not apply to this project.

N. ADDITIONAL LIGHTING ALLOWANCE: TAILORED ORNAMENTAL/SPECIAL EFFECTS

This section does not apply to this project.

Registration Number: | Registration Date/Time: | Registration Provider: EnergySoft

CA Building Energy Efficiency Standards - 2019 Nonresidential Compliance | Report Version: 2019.0.001 Schema Version: rev 20190401 | Report Generated: 2020-10-20 09:11:14

STATE OF CALIFORNIA
Indoor Lighting
NRCC-LTI-E
CALIFORNIA ENERGY COMMISSION

CERTIFICATE OF COMPLIANCE			**NRCC-LTI-E**
Project Name:	Replacement of Existing Residential Center	**Report Page:**	**(Page 5 of 7)**
Project Address:	440 East Hill Road	**Date Prepared:**	10/20/2020

O. ADDITIONAL LIGHTING ALLOWANCE: TAILORED VERY VALUABLE MERCHANDISE

This section does not apply to this project.

P.POWER ADJUSTMENT: LIGHTING CONTROL CREDIT (POWER ADJUSTMENT FACTOR (PAF))

This section does not apply to this project.

Q. RATED POWER REDUCTION COMPLIANCE FOR ALTERATIONS

This section does not apply to this project.

R. 80% LIGHTING POWER FOR ALLALTERATIONS - CONTROLS EXCEPTIONS

This section does not apply to this project.

S. DAYLIGHT DESIGN POWER ADJUSTMENT FACTOR (PAF)

This section does not apply to this project.

T. DECLARATION OF REQUIRED CERTIFICATES OF INSTALLATION

Selections have been made based on information provided in this document. If any selection have been changed by permit applicant, an explanation should be included in Table E. Additional Remarks. These documents must be provided to the building inspector during construction and can be found online at https://www.energy.ca.gov/title24/2019standards/2019_compliance_documents/Nonresidential_Documents/NRCI/

Yes	No	Form/Title	Field Inspector Pass	Field Inspector Fail
●	○	NRCI-LTI-01-E - Must be submitted for all buildings	☐	☐
○	●	NRCI-LTI-02-E- Must be submitted for a lighting control system, or for an Energy Management Control System (EMCS), to be recognized for compliance.	☐	☐
○	●	NRCI-LTI-04-E - Must be submitted for two interlocked systems serving an auditorium, a convention center, a conference room, a multipurpose room or a theater to be recognized for compliance.	☐	☐
○	●	NRCI-LTI-05-E- Must be submitted for a Power Adjustment Factor (PAF) to be recognized for compliance.	☐	☐
○	●	NRCI-LTI-06-E- Must be submitted for additional wattage installed in a video conferencing studio to be recognized for compliance.	☐	☐

Registration Number: | Registration Date/Time: | Registration Provider: EnergySoft

CA Building Energy Efficiency Standards - 2019 Nonresidential Compliance | Report Version: 2019.0.001 Schema Version: rev 20190401 | Report Generated: 2020-10-20 09:11:14

STATE OF CALIFORNIA
Indoor Lighting
NRCC-LTI-E
CALIFORNIA ENERGY COMMISSION

CERTIFICATE OF COMPLIANCE			**NRCC-LTI-E**
Project Name:	Replacement of Existing Residential Center	**Report Page:**	**(Page 1 of 7)**
Project Address:	440 East Hill Road	**Date Prepared:**	10/20/2020

This document is used to demonstrate compliance with requirements in §110.9, §110.12(c), §130.0, §130.1, §140.6 and §141.0(b)2 for indoor lighting scopes using the prescriptive path.

A. GENERAL INFORMATION

01	Project Location (city)	Willits	04	Total Conditioned Floor Area (ft²)	2,653
02	Climate Zone	2	05	Total Unconditioned Floor Area (ft²)	0
03	Occupancy Types Within Project (select all that apply):		06	# of Stories (Habitable Above Grade)	1

☐ Office ☐ Retail ☐ Warehouse ☐ Hotel/Motel ☐ School ☒ Support Areas
☐ Parking Garage ☐ High-Rise Residential ☐ Relocatable ☐ Healthcare ☒ Other (Write in) See Table I

B. PROJECT SCOPE

This table includes any lighting systems that are within the scope of the permit application and are demonstrating compliance using the prescriptive path outlined in §140.6 or §141.0(b)2 for alterations.

Scope of Work	Conditioned Spaces		Unconditioned Spaces	
01	02	03	04	05
My Project Consists of (check all that apply):	Calculation Method	Area (ft²)	Calculation Method	Area (ft²)
☒ New Lighting System	Area Category Method	2653	Area Category Method	0
☐ New Lighting System - Parking Garage				
☐ Altered Lighting System				
Total Area of Work (ft²)	2653		0	

C. COMPLIANCE RESULTS

If any cell on this table says "DOES NOT COMPLY" or "COMPLIES with Exceptional Conditions" refer to Table D. for guidance.

Lighting in conditioned and unconditioned spaces must not be combined for compliance per §140.6(b)1	Allowed Lighting Power per §140.6(b) (Watts) 01 Complete Building §140.6(c)1 (See Table I)	02 Area Category §140.6(c)2 (See Table I)	03 Area Category Additional §140.6(c)2(G) (+) (See Table J)	04 Tailored §140.6(c)3 (+) (See Table K)	=	05 Total Allowed (Watts)	≥	Adjusted Lighting Power per §140.6(a) (Watts) 06 Total Designed (Watts) (See Table F)	07 Adjustments PAF Lighting Control Credits §140.6(a)2 (-) (See Table P)	=	08 Total Adjusted (Watts) *Includes Adjustments	Compliance Results 09
												05 must be >= 08 §140.6
Conditioned	0	1,279.9	0	0	=	1279.9	≥	1,232.5	0	=	1232.5	COMPLIES
Unconditioned	0	0	0	0	=		≥	0	0	=	0	
									Controls Compliance (See Table H for Details)			COMPLIES
									Rated Power Reduction Compliance (See Table Q for Details)			

D. EXCEPTIONAL CONDITIONS

This table is auto-filled with uneditable comments because of selections made or data entered in tables throughout the form.

E. ADDITIONAL REMARKS

This table includes remarks made by the permit applicant to the Authority Having Jurisdiction.

F. INDOOR LIGHTING FIXTURE SCHEDULE

This table includes all permanent designed lighting and all portable lighting in offices.

Designed Wattage: Conditioned Spaces

01 Name or Item Tag	02 Complete Luminaire Description	03 Modular (Track) Fixture	04 Small Aperture & Color Change[1]	05 Watts per luminaire[2]	06 How is Wattage determined	07 Total Number of Luminaires	08 Exempt per §140.6(a)3	09 Design Watts	10 Field Inspector Pass	10 Field Inspector Fail
13	13 - 1x4 LED	No	No	32	JA8 Lamp	6	No	192	☐	☐
19	19 - Linear LED	No	No	16	JA8 Lamp	11	No	176	☐	☐

Registration Number: | Registration Date/Time: | Registration Provider: EnergySoft

CA Building Energy Efficiency Standards - 2019 Nonresidential Compliance | Report Version: 2019.0.001 Schema Version: rev 20190401 | Report Generated: 2020-10-20 09:11:14

TITLE 24 GENERAL NOTE

CONTRACTOR SHALL BE RESPONSIBLE FOR ALL WORK ASSOCIATED WITH FINAL INSPECTION AND APPLICABLE ACCEPTANCE REQUIREMENT PROCEDURES. INCLUDE ALL COSTS IN THE BASE BID. THIS SHALL INCLUDE, BUT NOT BE LIMITED TO, CONSTRUCTION INSPECTION, MEASUREMENTS, MONITORING, FUNCTIONAL TESTING, CALIBRATING, ETC. CONTRACTOR SHALL ASSUME THE ROLE OF "FIELD TECHNICIAN" AND "RESPONSIBLE PERSON" AS DEFINED IN STATE OF CALIFORNIA 2019 BUILDING ENERGY EFFICIENCY STANDARDS NONRESIDENTIAL COMPLIANCE MANUAL SECTION 13.2.2.

SEE STATE OF CALIFORNIA 2019 BUILDING ENERGY EFFICIENCY STANDARDS SECTIONS 10-103(a)3A AND 10-103(a)3B AND SECTION 130.4 FOR MORE INFORMATION.

SEE STATE OF CALIFORNIA 2019 BUILDING ENERGY EFFICIENCY STANDARDS NONRESIDENTIAL COMPLIANCE MANUAL CHAPTER 13 FOR MORE DETAILED REQUIREMENTS / INFORMATION.

SEE STATE OF CALIFORNIA 2019 BUILDING ENERGY EFFICIENCY STANDARDS RESIDENTIAL COMPLIANCE MANUAL CHAPTER 2 FOR MORE DETAILED REQUIREMENTS / INFORMATION.

PROVIDE COMPLETED INSTALLATION CERTIFICATE(S) AND CERTIFICATE(S) OF ACCEPTANCE AS REQUIRED TO THE SATISFACTION OF THE ENFORCEMENT AGENCY.

TITLE 24 PROCEDURES FOR TESTING AND ADJUSTING

CONTRACTOR SHALL BE RESPONSIBLE FOR ALL WORK ASSOCIATED WITH FINAL INSPECTION AND APPLICABLE ACCEPTANCE REQUIREMENT PROCEDURES. INCLUDE ALL COSTS IN THE BASE BID. THIS SHALL INCLUDE, BUT NOT BE LIMITED TO, CONSTRUCTION INSPECTION, MEASUREMENTS, MONITORING, FUNCTIONAL TESTING, CALIBRATING, ETC. CONTRACTOR SHALL ASSUME THE ROLE OF "FIELD TECHNICIAN" AND "RESPONSIBLE PERSON" AS DEFINED IN STATE OF CALIFORNIA 2019 BUILDING ENERGY EFFICIENCY STANDARDS NONRESIDENTIAL COMPLIANCE MANUAL SECTION 13.2.2.

LIGHTING CONTROL ACCEPTANCE TESTING AND ADJUSTING PROCEDURES – REFER TO NRCA-LTI-02-A DOCUMENTS.

AUTOMATIC DAYLIGHT CONTROL ACCEPTANCE TESTING AND ADJUSTING PROCEDURES – REFER TO NRCA-LTI-03-A DOCUMENTS.

DEMAND RESPONSE LIGHTING CONTROL ACCEPTANCE TESTING AND ADJUSTING PROCEDURES – REFER TO NRCA-LTI-04-A DOCUMENTS.

INSTITUTIONAL TUNING PAF ACCEPTANCE TESTING AND ADJUSTING PROCEDURES – REFER TO NRCA-LTI-05-A DOCUMENTS.

OUTDOOR LIGHTING CONTROL ACCEPTANCE TESTING AND ADJUSTING PROCEDURES – REFER TO NRCA-LTO-02-A DOCUMENTS.

ALL LIGHTING CONTROLS TESTING AND ADJUSTING DOCUMENTS NOTED ABOVE ARE AVAILABLE FROM THE CALIFORNIA ENERGY COMMISSION WEB SITE AT:

https://ww2.energy.ca.gov/title24/2019standards/2019_compliance_documents/Nonresidential_Documents/NRCA/

IDENTIFICATION STAMP
DIV. OF THE STATE ARCHITECT
APP: 02-118630 INC:
REVIEWED FOR
SS ☐ FLS ☐ ACS ☑
DATE: 04/13/2021

OFFICE OF THE STATE FIRE MARSHAL
APPROVED FIRE AND PANIC ONLY
Approval of this plan does not authorize or approve any omission or deviation from applicable regulations. Final approval is subject to field inspection. One set of approved plans shall be available on the project site at all times.
PERMIT NO: 28-N-2332-CP
REVIEWED BY: LEO CATALYO, OSFM
DATE: 4/ /2021

GENERAL SERVICES
Department of General Services
State of California
Real Estate Services Division
Project Management & Development Branch
707 Third Street, Suite 4-105
West Sacramento, California 95605

NICHOLS MELBURG & ROSSETTO ARCHITECTS + ENGINEERS
300 Knollcrest Drive
Redding, CA. 96002
(530) 222-3300 (530) 222-3538 FAX
http://www.nmrdesign.com

Copyright © 2019
All ideas, designs, arrangements and plans indicated or represented by this drawing are owned by, and the property of, NICHOLS, MELBURG and ROSSETTO and were created, evolved and developed for use on, and in connection with, the specified project. None of such ideas, designs, arrangements or plans shall be used by, or disclosed to, any person, firm or corporation for any purpose whatsoever without the written permission of NICHOLS, MELBURG and ROSSETTO.

LICENSE STAMPS

REGISTERED PROFESSIONAL ENGINEER RAYMOND W. SWARTZ No. E15610 12/31/2021 CIVIL STATE OF CALIFORNIA
Date Signed: 3/25/2021

CONSULTANT
tklsc COLLABORATIVE
11870 Pierce Street, Suite 160
Riverside, California 92505
951.299.4160 www.tk1sc.com
Project Leader - Jerry Leonhardt
Electrical Lead - Reid Cordry
tk1sc Job #:2019-0228A

DRAWING STATUS
CONSTRUCTION DOCUMENTS

ISSUE

No.	Date	Description
1	10/20/2020	INITIAL PLAN REVIEW
2	01/22/2021	AGENCY RESUBMITTAL
3	03/22/2021	AGENCY RESUBMITTAL

If drawing is not 30" x 42" it is a reduced print

PROJECT
RESIDENTIAL CENTER, UKIAH: REPLACEMENT OF EXISTING RESIDENTIAL CENTER
440 EAST HILL ROAD
WILLITS, CALIFORNIA 95490
MENDOCINO COUNTY
CALIFORNIA CONSERVATION CORP

Supervisor	Designed	Drawn
		Author

DSA Application No.
02-118630

SHEET TITLE
TITLE 24 MEN'S HOUSING

DGS Project Number	NMR Project Number
0000000000001826	18-6456

Reference North: NORTH | Sheet Scale

Sheet Number
E505HM

ISSUE DATE
July 9, 2021

Plot Date: 3/22/2021 9:00:06 AM
File Name: BIM 360:/CCC Willits Residential Center/E_CCC Willits_COMMON_2019-0228A.rvt

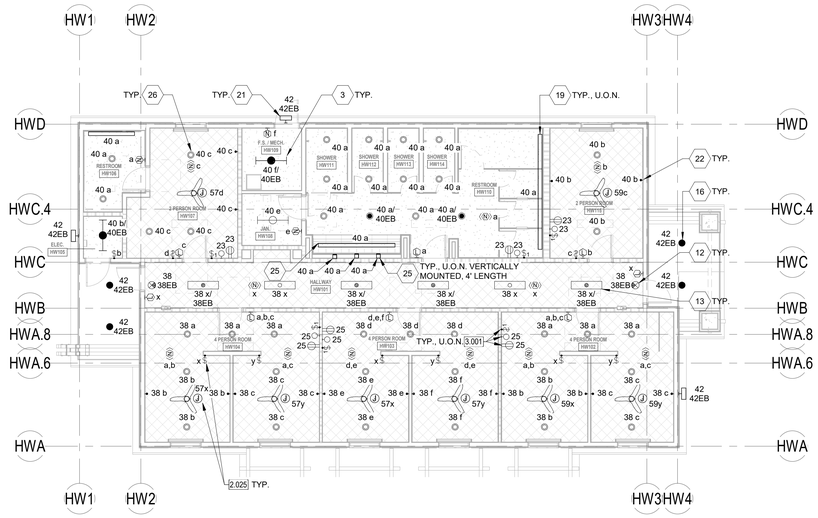

WOMEN'S HOUSING LIGHTING PLAN

SCALE: 1/8" = 1'-0"

VOLTAGE DROP WORKSHEET: REFERENCE ONLY

1. ALL BRANCH CIRCUITS ARE DESIGNED TO LIMIT VOLTAGE DROP 3% OR LESS USING THE FOLLOWING CRITERIA:

208 VOLT, 1 PHASE LOAD:

LOAD (VA)	DISTANCE	CU CONDUCTOR SIZE
0-1000 VA (500 PER PHASE) 0-4.8 AMPS	0-225 FT	#12
	226-360 FT	#10
	361-572 FT	#8
1001-2000 VA (1,000 PER PHASE) 4.8-9.6 AMPS	0-151 FT	#12
	152-240 FT	#10
	241-380 FT	#8
	381-604 FT	#6
2001-3,328 VA (1,664 PER PHASE) 9.6-16 AMPS	0-78 FT	#12
	79-125 FT	#10
	126-198 FT	#8
3329-4,992 VA (2,496 PER PHASE) 16-24 AMPS	0-52 FT	#12
	53-83 FT	#10
	84-132 FT	#8

120 VOLT, 1 PHASE LOAD:

LOAD (VA)	DISTANCE	CU CONDUCTOR SIZE
0-1000 VA 0-8 AMPS	0-130 FT	#12
	131-205 FT	#10
	205-330 FT	#8
1001-1500 VA 8-12.5 AMPS	0-87 FT	#12
	88-138 FT	#10
	139-219 FT	#8
	220-350 FT	#6
1501-1920 VA 12.5-16 AMPS	0-68 FT	#12
	69-108 FT	#10
	109-172 FT	#8
	173-273 FT	#6
1921-2880 VA 16-24 AMPS	0-72 FT	#10
	73-114 FT	#8
	115-182 FT	#6

ANY 3 PHASE LOADS GREATER THAN 30 AMPS ARE SHOWN ON THE FEEDER SCHEDULE OR MOTORIZED EQUIPMENT SCHEDULE WITH ASSOCIATED VOLTAGE DROP LIMITED TO 2% OR LESS.

KEYNOTES

2.025	CONNECT TO CEILING FAN PER MANUFACTURER'S REQUIREMENTS.
3.001	RECEPTACLE, SWITCH, AND LIGHT FIXTURE MOUNTED ABOVE CEILING. PROVIDE A KEYLESS PLASTIC LAMP HOLDER LEVITON #R50-08829-CW4, OR EQUAL, MOUNTED ON A JUNCTION BOX WITH ONE LED A19 9W LAMP. COORDINATE AND VERIFY EXACT MOUNTING LOCATION IN FIELD WITH MECHANICAL EQUIPMENT INSTALLER PRIOR TO ROUGH IN.

LIGHTING PLAN GENERAL NOTES:

1. REFER TO ARCHITECTURAL PLANS FOR EXACT LOCATION AND ELEVATION OF ALL LIGHTING FIXTURES AND ALL DEVICES. ALL WALL-MOUNTED DEVICE HEIGHTS SHALL BE VERIFIED WITH THE ARCHITECT PRIOR TO ROUGH-IN.
2. VERIFY EXACT CEILING CONSTRUCTION WITH ARCHITECTURAL REFLECTED CEILING PLAN AND PROVIDE LIGHTING FIXTURES WITH ALL NECESSARY MOUNTING HARDWARE.
3. ALL RECESSED FIXTURES SHALL BE PROVIDED WITH ALL REQUIRED STRUCTURAL SUPPORTS AS REQUIRED BY THE CURRENTLY ADOPTED ISSUE OF THE IBC, OR CBC WHERE ADOPTED, IN ADDITION TO ANY LOCAL CODES
4. ALL COVE MOUNTED FIXTURES SHALL EXTEND THE FULL LENGTH OF THE COVE. CONTRACTOR TO FIELD MEASURE COVE LENGTH AND ORDER QUANTITY OF FIXTURES AS REQUIRED.
5. ALL DIMMING BRANCH CIRCUITS SHALL BE PROVIDED WITH A DEDICATED NEUTRAL CONDUCTOR FOR EACH ZONE/CHANNEL.
6. ALL FLUORESCENT DIMMING ZONES/CHANNELS SHALL BE PROVIDED WITH 3 LINE VOLTAGE CONDUCTORS (NEUTRAL, DIMMED HOT, SWITCHED HOT) OR 2 LINE VOLTAGE CONDUCTORS/2 CONTROL CONDUCTORS AS REQUIRED BY THE CONTROL/BALLAST TYPE.
7. ALL EMERGENCY BATTERY PACK FIXTURES SHALL BE PROVIDED WITH A CONSTANT HOT CONNECTION TO THE CHARGING LEAD. SEE GENERAL LIGHTING FIXTURE SCHEDULE NOTES FOR MORE INFORMATION.
8. REFER TO ARCHITECTURAL REFLECTED CEILING PLANS FOR EXIT SIGN CHEVRONS AND NUMBER OF FACES PER EXIT SIGN. ANY DISCREPANCIES BETWEEN EXIT SIGNS SHOWN ON THE ELECTRICAL AND ARCHITECTURAL PLANS SHALL BE BROUGHT TO THE ATTENTION OF THE ARCHITECT PRIOR TO ORDERING EXIT SIGNS.
9. WHEN EXPOSED CEILINGS OR OPEN GRID CONDITIONS OCCUR, THE CONTRACTOR WILL NEED TO PROVIDE THE FOLLOWING ITEMS:

   - ALL BRANCH CIRCUITS SHALL BE IN EMT.

   - ALL BRANCH CIRCUITS SHALL BE ROUTED, NEATLY TRAINED, AND IN PARALLEL TO STRUCTURES OR DUCT WORK. THE TERM "TRAINED" MEANS ALL PARALLEL CONDUITS SHALL MAINTAIN THE SAME SPATIAL RELATIONSHIP WITH EACH OTHER FOR ENTIRE RUN TO INCLUDE RADIUS BENDS AND SWEEPS.

   - VISUALLY OBJECTIONABLE BRANCH CIRCUITS WILL BE REROUTED AT THE REQUEST OF THE ARCHITECT AT NO ADDITIONAL COST.
10. ALL LED REMOTE INDICATORS FOR DUCT DETECTORS AND FIRE/SMOKE DAMPERS REQUIRED BY THE SFM SHALL BE LOCATED IN CEILINGS IN COORDINATION WITH ARCHITECT PRIOR TO ANY ROUGH-IN.
11. RECESSED FIXTURES LOCATED IN A FIRE-RATED CEILING OR WALL SHALL BE PROVIDED WITH A 5-SIDED RATED ENCLOSURE SO CONSTRUCTED AS TO ALLOW CODE AND MANUFACTURER-REQUIRED CLEARANCES BETWEEN THE FIXTURE AND THE ENCLOSURE.
12. PROVIDE REDUNDANT GROUND PATH IN ALL BRANCH CIRCUITS SERVING PATIENT CARE AREAS CONSISTING OF A SEPARATE, INSULATED EQUIPMENT GROUNDING CONDUCTOR PER NEC, OR CEC WHERE ADOPTED, ART 517.13.
13. PROVIDE ADDITIONAL J-BOX NEAR PANEL FOR MULTIPLE HOMERUN CIRCUITRY.
14. UNLESS SPECIFICALLY SHOWN AS (E), (R), (ER), (D), EXISTING OR NON-BOLD, ALL ELECTRICAL DEVICES SHOWN ARE NEW.
15. REFER TO GENERAL POWER PLAN NOTES AND COMMUNICATIONS PATHWAYS GENERAL NOTES FOR ADDITIONAL REQUIREMENTS WHEN POWER AND/OR DATA DEVICES ARE SHOWN ON THIS PLAN.
16. CONTRACTOR SHALL PROVIDE CONDUIT AND WIRE FOR ALL DEVICES TO PANELBOARD(S) INDICATED ON PLANS FOR A COMPLETE AND OPERABLE SYSTEM.
17. CONTRACTOR SHALL PROVIDE MINIMUM 2#12, 1#12G IN ½" CONDUIT UNLESS OTHERWISE NOTED. REFERENCE WIRE SIZE TABLE CHART ABOVE. WHERE REQUIRED, CONDUIT AND WIRE SHALL BE UPSIZED TO MEET THE REQUIREMENT OF THE DEVICE BEING SERVED BY THE BRANCH CIRCUIT. WHERE CONDUIT AND WIRING IS INDICATED AT THE HOME RUN, WIRING AND CONDUIT SHALL CONTINUE AT THAT SIZE FOR THE ENTIRE LENGTH OF THE CIRCUIT.
18. CONTRACTOR SHALL FURNISH ADDITIONAL SWITCHLEGS OR HOT WIRES AS REQUIRED TO MEET THE CONTROL INTENT OF THE DOCUMENTS AND AS REQUIRED BY CODE (I.E. EMERGENCY LIGHTING AND SWITCHED RECEPTACLES).
19. MULTIPLE CIRCUITS MAY BE USED IN A SINGLE RACEWAY. NO MORE THAN (3) DEDICATED CIRCUITS OR (4) CURRENT CARRYING CONDUCTORS SHALL BE INSTALLED IN ANY RACEWAY UNLESS OTHERWISE NOTED. WHERE A COMMON GROUNDED CONDUCTOR IS USED FOR MULTIPLE INDIVIDUAL BRANCH CIRCUITS, PER SECTIONS CEC 200.4, 250.122, 310.15(B)(2), CONDUIT SIZE SHALL BE INCREASED AS REQUIRED FOR THE CONDUCTORS INCLUDING TEMPERATURE DERATING PER CEC TABLE C1.
20. FURNISH AND INSTALL JUNCTION BOXES AS REQUIRED TO MEET MAXIMUM BEND REQUIREMENTS FOR PULLING WIRES PER CEC 358.26. JUNCTION BOXES SHALL BE SIZED AS REQUIRED PER CEC 314.28 UNLESS OTHERWISE NOTED.

WALL TYPES LEGEND

SEE SHEET G121 FOR ASSEMBLY TYPES

EXTERIOR

	2 x 6 WOOD STUD WALL - NON RATED	0-W1-6 * ● #
	2 x 12 WOOD STUD WALL - NON RATED	0-W1-12 * ● #

INTERIOR

	2 x 4 WOOD STUD WALL - NON RATED	0-W2-4 * ● #
	2 x 6 WOOD STUD WALL - NON RATED	0-W2-6 * ● #
	2 x 8 WOOD STUD WALL - NON RATED	0-W2-8 * ● #
	2 x 12 WOOD STUD WALL - NON RATED	0-W2-12 * ● #
	2 x 4 WOOD STUD WALL - ACOUSTIC	0-W5-4 * ● #
	2 x 6 WOOD STUD WALL - ACOUSTIC	0-W5-6 * ● #
	2 X 4 WOOD STUD WALL - 1-HR FIRE PARTITION W/ PROTECTED OPENINGS	1-W3-4 * ● #
	2 X 6 WOOD STUD WALL - 1-HR FIRE PARTITION W/ PROTECTED OPENINGS	1-W3-6 * ● #

WALL TYPE NOTES

PARTITION SYMBOL

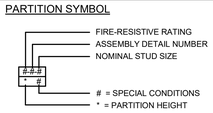

IDENTIFICATION STAMP
DIV. OF THE STATE ARCHITECT
APP: 02-118630 INC:
REVIEWED FOR
SS ☐ FLS ☐ ACS ☑
DATE: 04/13/2021

OFFICE OF THE STATE FIRE MARSHAL
APPROVED FIRE AND PANIC ONLY
Approval of this plan does not authorize or approve any omission or deviation from applicable regulations. Final approval is subject to field inspection. One set of approved plans shall be available on the project site at all times.
PERMIT NO: 28 N 2332-CP
REVIEWED BY: LEO CATAYLO, OSFM
DATE: 4 / /2021

DGS GENERAL SERVICES
Department of General Services
State of California
Real Estate Services Division
Project Management & Development Branch
707 Third Street, Suite 4-105
West Sacramento, California 95605

NICHOLS MELBURG & ROSSETTO ARCHITECTS + ENGINEERS
300 Knollcrest Drive
Redding, CA. 96002
(530) 222-3300 (530) 222-3538 FAX
http://www.nmrdesign.com

Copyright © 2019
All ideas, designs, arrangements and plans indicated or represented by this drawing are owned by, and the property of, NICHOLS, MELBURG and ROSSETTO and were created, evolved and developed for use on, and in connection with, the specified project. None of such ideas, designs, arrangements or plans shall be used by, or disclosed to any person, firm or corporation for any purpose whatsoever without the written permission of NICHOLS, MELBURG and ROSSETTO.

LICENSE STAMPS

REGISTERED PROFESSIONAL ENGINEER RAYMOND W. SWIFT No. E15610 12/31/2021 ELECTRICAL STATE OF CALIFORNIA
Date Signed: 3/25/2021

CONSULTANT

tklsc COLLABORATIVE
11870 Pierce Street, Suite 160
Riverside, California 92505
951.299.4160 www.tk1sc.com
Project Leader - Jerry Leonhardt
Electrical Lead - Reid Cordry
tk1sc Job #:2019-0228A

DRAWING STATUS
CONSTRUCTION DOCUMENTS

ISSUE

No.	Date	Description
1	10/20/2020	INITIAL PLAN REVIEW
2	01/22/2021	AGENCY RESUBMITTAL
3	03/22/2021	AGENCY RESUBMITTAL

If drawing is not 30" x 42" it is a reduced print

PROJECT
RESIDENTIAL CENTER, UKIAH: REPLACEMENT OF EXISTING RESIDENTIAL CENTER
440 EAST HILL ROAD
WILLITS, CALIFORNIA 95490
MENDOCINO COUNTY
CALIFORNIA CONSERVATION CORPS

Supervisor	Designed	Drawn
		Author

DSA Application No.
XX-XXXXXX

SHEET TITLE
WOMEN'S HOUSING LIGHTING PLAN

DGS Project Number: 000000000001826
NMR Project Number: 18-6456

Reference North
Sheet Scale: As indicated
Sheet Number: E101HW

ISSUE DATE
July 9, 2021

Plot Date: 3/22/2021 9:12:04 AM
File Name: BIM 360://CCC Willits Residential Center/E_CCC Willits_DORM-WOMEN_2019-0228A.rvt

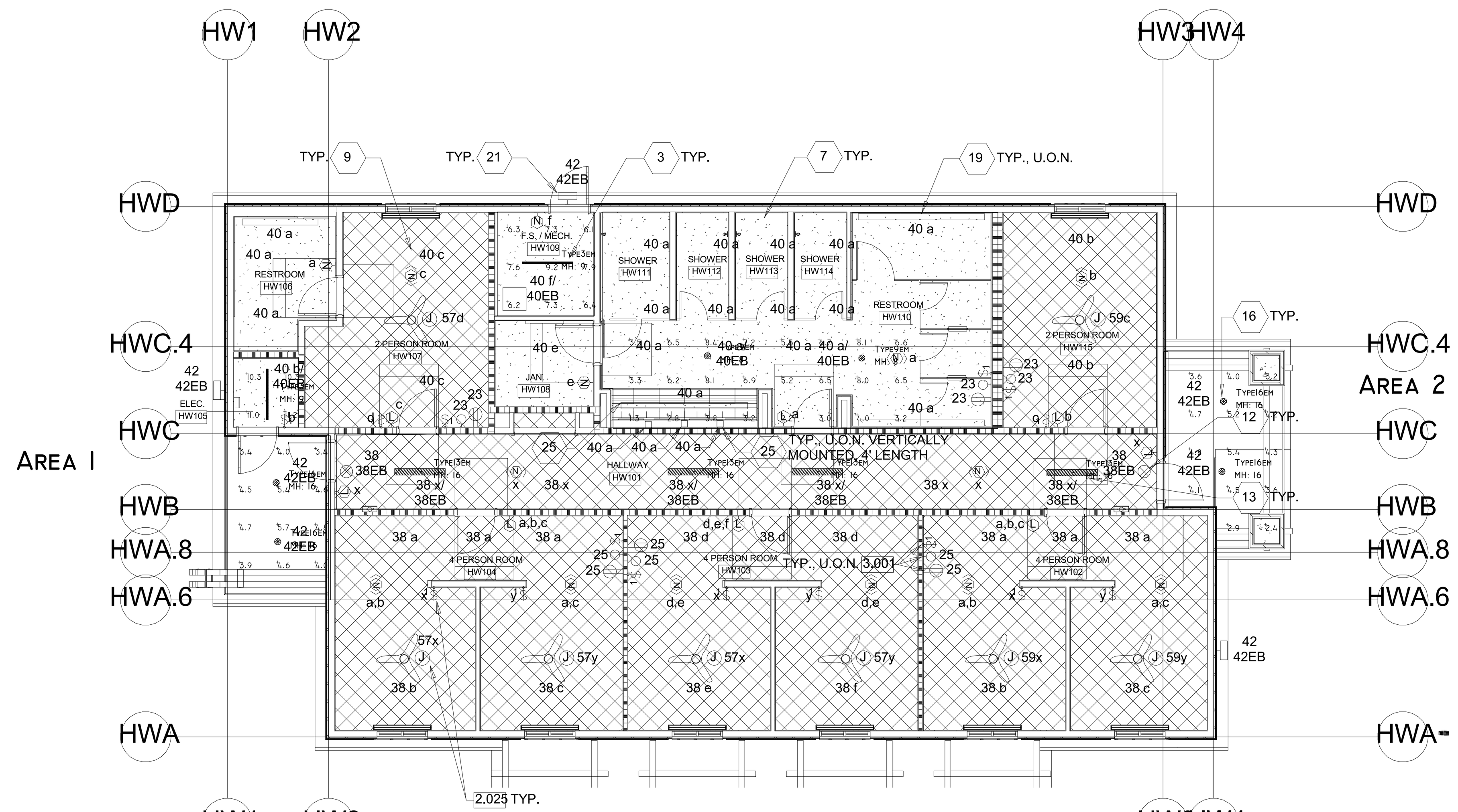

Luminaire Schedule

Symbol	Qty	Label	Arrangement	Description	BUG Rating
	4	Type16em	SINGLE	Cooper Halo Commercial PD615ED010- PDM6A835-61VC-em7wbattery	B2-U0-G0
	2	Type9em	SINGLE	Cooper Halo Commercial HC610D010-HM612835-61WDWF	B1-U0-G0
	2	Type3em	SINGLE	Cooper Metalux 4SNLED-LD5-22SL-LN-UNV-L835-CD1-U-EL7	B1-U3-G1
	4	Type13em	SINGLE	Cooper Fail Safe HVL8-4-LD4-1STD-35-UNV-C-EL14	B1-U3-G1

Calculation Summary

Label	CalcType	Units	Avg	Max	Min	Avg/Min	Max/Min
Area1	Illuminance	Fc	4.42	5.7	3.4	1.30	1.68
Area2	Illuminance	Fc	4.06	5.4	2.4	1.69	2.25
Mech Rm HW109_Floor	Illuminance	Fc	7.14	9.2	6.1	1.17	1.51
Restroom HW110_Floor	Illuminance	Fc	5.28	8.4	1.3	4.06	6.46
Rm HW105_Floor	Illuminance	Fc	10.70	11.2	10.3	1.04	1.09

NORTH

WOMEN'S HOUSING EMERGENCY LIGHTING PHOTOMETRIC PLAN

SCALE: 1/8" = 1'-0"

IDENTIFICATION STAMP
DIV. OF THE STATE ARCHITECT
APP: 02-118630 INC:
REVIEWED FOR
SS ☐ FLS ☐ ACS ☑
DATE: 04/13/2021

OFFICE OF THE STATE FIRE MARSHAL
APPROVED FIRE AND PANIC ONLY
Approval of this plan does not authorize or approve any omission or deviation from applicable regulations. Final approval is subject to field inspection. One set of approved plans shall be available on the project site at all times.
PERMIT NO: 20-N-2332-CP
REVIEWED BY: LEO CATAYLO, OSFM
DATE: 4 / 1 /2021

DGS
GENERAL SERVICES
Department of General Services
State of California
Real Estate Services Division
Project Management & Development Branch
707 Third Street, Suite 4-105
West Sacramento, California 95605

NM&R
NICHOLS MELBURG & ROSSETTO
ARCHITECTS + ENGINEERS
300 Knollcrest Drive
Redding, CA. 96002
(530) 222-3300 (530) 222-3538 FAX
http://www.nmrdesign.com

Copyright © 2019
All ideas, designs, arrangements and plans indicated or represented by this drawing are owned by, and the property of, NICHOLS, MELBURG and ROSSETTO and were created, evolved and developed for use on, and in conjunction with, the specified project. None of such ideas, designs, arrangements or plans shall be used by, or disclosed to any person, firm or corporation for any purpose whatsoever without the written permission of NICHOLS, MELBURG and ROSSETTO.

LICENSE STAMPS

REGISTERED PROFESSIONAL ENGINEER
RAYMOND W. SIMPSON
No. E15610
Exp. 12/31/2021
ELECTRICAL
STATE OF CALIFORNIA
Date Signed
3/25/2021

CONSULTANT

tk1sc
COLLABORATIVE
11870 Pierce Street, Suite 160
Riverside, California 92505
951.299.4160 www.tk1sc.com
Project Leader - Jerry Leonhardt
Electrical Lead - Reid Cordry
tk1sc Job #:2019-0228A

DRAWING STATUS
CONSTRUCTION DOCUMENTS

ISSUE

No.	Date	Description
1	10/20/2020	INITIAL PLAN REVIEW
2	01/22/2021	AGENCY RESUBMITTAL
3	03/22/2021	AGENCY RESUBMITTAL

If drawing is not 30" x 42" it is a reduced print

PROJECT
RESIDENTIAL CENTER, UKIAH: REPLACEMENT OF EXISTING RESIDENTIAL CENTER
440 EAST HILL ROAD
WILLITS, CALIFORNIA 95490
MENDOCINO COUNTY
CALIFORNIA CONSERVATION CORPS

Supervisor	Designed	Drawn
		Author

DSA Application No.
XX-XXXXXX

SHEET TITLE
WOMEN'S HOUSING EMERGENCY LIGHTING PHOTOMETRIC PLAN

DGS Project Number	NMR Project Number
000000000001826	18-6456

Reference North
NORTH

Sheet Scale
1/8" = 1'-0"

Sheet Number
E102HW

ISSUE DATE
July 9, 2021

Plot Date: 3/22/2021 9:12:06 AM
File Name: BIM 360://CCC Willits Residential Center/E_CCC Willits_DORM-WOMEN_2019-0228A.rvt

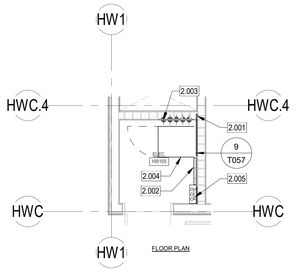

2 BLDG HW - ENLARGED IDF PLANS HW105

SCALE: 1/4" = 1'-0"

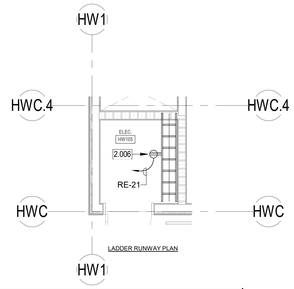

3 BLDG HW - ENLARGED IDF LADDER RUNWAY

SCALE: 1/4" = 1'-0"

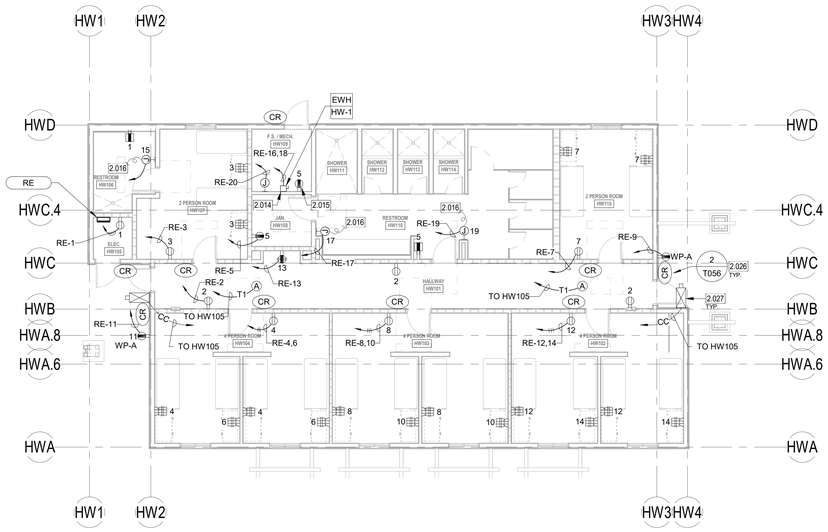

WOMEN'S HOUSING POWER AND SIGNAL PLAN

SCALE: 1/8" = 1'-0"

VOLTAGE DROP WORKSHEET: REFERENCE ONLY

1. ALL BRANCH CIRCUITS ARE DESIGNED TO LIMIT VOLTAGE DROP 3% OR LESS USING THE FOLLOWING CRITERIA:

208 VOLT, 1 PHASE LOAD:

LOAD (VA)	DISTANCE	CU CONDUCTOR SIZE
0-1000 VA (500 PER PHASE)	0-225 FT	#12
	226-360 FT	#10
0-4.8 AMPS	361-572 FT	#8
1001-2000 VA (1,000 PER PHASE)	0-151 FT	#12
	152-240 FT	#10
4.8-9.6 AMPS	241-380 FT	#8
	381-604 FT	#6
2001-3,328 VA (1,664 PER PHASE)	0-78 FT	#12
	79-125 FT	#10
9.6-16 AMPS	126-198 FT	#8
3329-4,992 VA (2,496 PER PHASE)	0-52 FT	#12
	53-83 FT	#10
16-24 AMPS	84-132 FT	#8

120 VOLT, 1 PHASE LOAD:

LOAD (VA)	DISTANCE	CU CONDUCTOR SIZE
0-1000 VA	0-130 FT	#12
0-8 AMPS	131-205 FT	#10
	205-330 FT	#8
1001-1500 VA	0-87 FT	#12
8-12.5 AMPS	88-138 FT	#10
	139-219 FT	#8
	220-350 FT	#6
1501-1920 VA	0-68 FT	#12
12.5-16 AMPS	69-108 FT	#10
	109-172 FT	#8
	173-273 FT	#6
1921-2880 VA	0-72 FT	#10
16-24 AMPS	73-114 FT	#8
	115-182 FT	#6

ANY 3 PHASE LOADS GREATER THAN 30 AMPS ARE SHOWN ON THE FEEDER SCHEDULE OR MOTORIZED EQUIPMENT SCHEDULE WITH ASSOCIATED VOLTAGE DROP LIMITED TO 2% OR LESS.

WALL TYPE NOTES

PARTITION SYMBOL

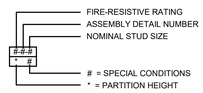

WALL TYPES LEGEND

SEE SHEET G121 FOR ASSEMBLY TYPES

EXTERIOR

2 x 6 WOOD STUD WALL - NON RATED	0-W1-6 * ● #
2 x 12 WOOD STUD WALL - NON RATED	0-W1-12 * ● #

INTERIOR

2 x 4 WOOD STUD WALL - NON RATED	0-W2-4 * ● #
2 x 6 WOOD STUD WALL - NON RATED	0-W2-6 * ● #
2 x 8 WOOD STUD WALL - NON RATED	0-W2-8 * ● #
2 x 12 WOOD STUD WALL - NON RATED	0-W2-12 * ● #
2 x 4 WOOD STUD WALL - ACOUSTIC	0-W5-4 * ● #
2 x 6 WOOD STUD WALL - ACOUSTIC	0-W5-6 * ● #
2 X 4 WOOD STUD WALL - 1-HR FIRE PARTITION W/ PROTECTED OPENINGS	1-W3-4 * ● #
2 X 6 WOOD STUD WALL - 1-HR FIRE PARTITION W/ PROTECTED OPENINGS	1-W3-6 * ● #

KEYNOTES

2.001 PLYWOOD BACKBOARD AND TELECOMMUNICATIONS BUSBAR BY E.C. SCS CONTRACTOR SHALL INSTALL #6 WITH GREEN INSULATION TO EACH DATA EQUIPMENT RACK/CABINET, OVERHEAD LADDER TRAY/LADDER RACK, TELECOMMUNICATIONS CONDUITS, TELECOMMUNICATIONS CABLE TRAY(S), ANTI STATIC TILE GROUNDING POINTS ETC. AS REQUIRED. CONNECTIONS SHALL BE MADE WITH 2 HOLE COMPRESSION CONNECTORS. ALL CONNECTIONS SHALL BE BARE METAL TO BARE METAL USING APPROPRIATE ANTIOXIDANT COMPOUND.

2.002 WALL FIELD FOR CAMPUS COPPER BACKBONE CABLE

2.003 4" UNDERGROUND CONDUIT FOR CAMPUS BACKBONE CABLE

2.004 WALL MOUNT CABINET, (CPI PN#12419-736, CPI PN#40975-001, CPI PN#40973-001) ON EXISTING WALL BOARD. SCS CONTRACTOR TO VERIFY PROPER SPACE AND CLEARANCE BEFORE INSTALLATION.

2.005 ANSI-J-STD 607A COMPLIANT U.L.-LISTED TELECOMMUNICATIONS MAIN GROUND BUSBAR (TMGB) CHATSWORTH #40153-020 OR EQUAL BY HARGER. MOUNT 12"A.F.F. PROVIDE 1/8" BRASS ENGRAVED NAMEPLATE WITH ABBREVIATION "T.M.G.B." AND ATTACH TO BUS BAR. PROVIDE #6 GROUND CONDUCTOR WITH GREEN INSULATION TO EACH DATA EQUIPMENT RACK/CABINET, OVERHEAD LADDER TRAY/LADDER RACK, ETC. AS REQUIRED. CONNECTIONS SHALL BE MADE WITH 2 HOLE COMPRESSION CONNECTORS. CONNECTIONS SHALL BE BARE METAL TO BARE METAL USING APPROPRIATE ANTIOXIDANT COMPOUND. PROVIDE ALL OTHER GROUNDING REQUIREMENTS AS DETAILED IN THE PATHWAYS & GROUNDING RISER DIAGRAM SHEET T4.07. ELECTRICAL CONTRACTOR SHALL PROVIDE 1/2"G. WITH #6AWG WITH GREEN INSULATION FROM TMGB TO GROUND BUSBAR LOCATED INSIDE MPOE ROOM ELECTRICAL PANEL. ELECTRICAL CONTRACTOR SHALL PROVIDE TELECOMMUNICATIONS BONDING CONDUCTOR (TBC) CONSISTING OF (1) 1"C., W/ #1AWG (U.O.N.) WITH GREEN INSULATION CONNECTING MAIN BUILDING GROUND BUS BAR LOCATED IN MAIN ELECTRICAL ROOM TO THE TELECOMMUNICATIONS MAIN GROUNDING BUSBAR (TMGB) UTILIZING 2-HOLE COMPRESSION CONNECTORS. LABEL EACH END OF TBC WITH A GROUND WARNING TAG (PANDUIT #PT-BGRND OR EQUAL).

2.006 NEMA L6-30R 30A TWIST-LOCK MOUNTED TO LADDER RACK, PROVIDED BY E.C.

2.014 CONNECT COMPLETE TO WATER HEATER AS REQUIRED. PROVIDE CODE SIZED DISCONNECT SWITCH AT THE WATER HEATER AS REQUIRED. COORDINATE LOCATION WITH PLUMBING CONTRACTOR PRIOR TO ROUGH-IN.

2.015 CONNECT CIRCULATION PUMP, TIME CLOCK AND/OR AQUASTAT AS REQUIRED. PROVIDE CODE SIZED DISCONNECT SWITCH AS REQUIRED. SEE PLUMBING PLANS FOR MORE INFORMATION. COORDINATE LOCATION WITH PLUMBING CONTRACTOR PRIOR TO ROUGH-IN.

2.016 PROVIDE CONNECTION TO ELECTRIC HAND DRYERS PER MANUFACTURER'S REQUIREMENTS.

2.026 ACCESS CONTROL SYSTEM CARD READER WITH CONDUIT AND CABLING, PER SPECIFICATIONS. SEE SHEET T.056 FOR MORE INFORMATION.

2.027 CCTV LOCATION, EXTERIOR MOUNT IOP CAMERA. PROVIDE AND INSTALL FLUSH MOUNTED SINGLE GANG J-BOX WITH 1" WATERPROOF SLEEVE TO THE ACCESSIBLE CEILING SPACE FOR FUTURE EXTERIOR CCTV CAMERA. PROVIDE (1)CAT-6A CABLE TO EQUIPMENT PATCH PANEL IN NEAREST IDF/MDF ROOM. PROVIDE FIRE STOP PER CODE. MINIMUM 1/2" DEEP FIRE STOP PUTTY ON EACH SIDE FOR SOUND ISOLATION FOR FIRE RATED WALL PENETRATIONS. COORDINATE FINAL LOCATION WITH ARCH RCP. SEE SHEET T055 FOR MORE INFORMATION.

POWER PLAN GENERAL NOTES:

1. ALL RECEPTACLES ON COMMON WALLS SHALL BE SEPARATE BOXES AND OFFSET 24-INCHES MINIMUM.
2. ALL PENETRATIONS THROUGH FIRE RATED WALLS SHALL BE PROTECTED FROM THE SPREAD OF FIRE WITH AN APPROVED FIRESTOP SYSTEM EQUAL OR GREATER THAN THE FIRE RATING OF THE WALL.
3. ALL WALL-MOUNTED DEVICE HEIGHTS SHALL BE VERIFIED WITH THE ARCHITECT PRIOR TO ROUGH-IN.
4. ALL FURNITURE FEED LOCATIONS TO BE VERIFIED WITH ARCHITECT AND FURNITURE VENDOR PRIOR TO ROUGH-IN.
5. ALL FURNITURE WHIPS SHALL BE TRIMMED TO REDUCE EXCESS WHIP LENGTH.
6. WHEN EXPOSED CEILINGS OR OPEN GRID CONDITIONS OCCUR, THE CONTRACTOR WILL NEED TO PROVIDE THE FOLLOWING ITEMS:

   - ALL BRANCH CIRCUITS SHALL BE IN EMT.

   - ALL BRANCH CIRCUITS SHALL BE ROUTED NEATLY AND IN PARALLEL TO STRUCTURES OR DUCT WORK.

   - VISUALLY OBJECTIONABLE BRANCH CIRCUITS SHALL BE REROUTED AT THE REQUEST OF THE ARCHITECT AT NO ADDITIONAL COST.
7. EXPOSED CABLE/CONDUCTORS INSTALLED IN A PLENUM SPACE SHALL CONFORM TO NEC, OR CEC WHERE ADOPTED, ARTICLE 300.22(C).
8. PROVIDE G.F.C.I. TYPE RECEPTACLE(S) OR RECEPTACLE(S) PROTECTED BY A GFCI CIRCUIT BREAKER(S) WHEN LOCATED WITHIN 6 FEET OF ANY SINK OR THERAPEUTIC TUB, LAUNDRY AREA, SERVING ANY DRINKING FOUNTAIN OR VENDING MACHINE, WITHIN ANY KITCHEN SPACE AND/OR LOCATED OUTDOORS. WHERE RECEPTACLES ARE NOT READILY ACCESSIBLE, PROVIDE GFCI CIRCUIT BREAKER(S) TO PROTECT THE RESPECTIVE BRANCH CIRCUIT AND PROVIDE ADDITIONAL NEUTRAL CONDUCTORS IN THE BRANCH CIRCUITING AS REQUIRED TO ENSURE PROPER GFCI FUNCTION
9. PROVIDE OCCUPANCY SENSOR/LIGHTING CONTROL SYSTEM CONTROLLED RECEPTACLE RELAY(S) AS REQUIRED TO SWITCH CONTROLLED RECEPTACLES. CONNECT BRANCH CIRCUITRY AND CONTROL WIRING AS REQUIRED TO ALLOW OCCUPANCY SENSOR/LIGHTING CONTROL SYSTEM RELAY TO SWITCH STANDALONE AND/OR SYSTEMS FURNITURE CONTROLLED RECEPTACLES AS INDICATED ON PLANS. PROVIDE ADDITIONAL CONDUIT, WIRING AND PATHWAYS NECESSARY TO CONNECT BRANCH CIRCUITRY AND CONTROL WIRING TO REMOTE RELAYS TO INCLUDE RELAY(S) LOCATED ON ALTERNATE FLOORS, IN ELECTRICAL ROOMS, ETC.
10. UNLESS SPECIFICALLY SHOWN AS (E), (R), (ER), (D), EXISTING OR NON-BOLD, ALL ELECTRICAL DEVICES SHOWN ARE NEW.
11. PROVIDE REDUNDANT GROUND PATH IN ALL BRANCH CIRCUITS SERVING PATIENT CARE AREAS CONSISTING OF A SEPARATE, INSULATED EQUIPMENT GROUNDING CONDUCTOR PER NEC, OR CEC WHERE ADOPTED, ART 517.13.
12. CONTRACTOR SHALL PROVIDE CONDUIT AND WIRE FOR ALL DEVICES TO PANELBOARD(S) INDICATED ON PLANS FOR A COMPLETE AND OPERABLE SYSTEM.
13. CONTRACTOR SHALL PROVIDE MINIMUM 2#12, 1#12G IN ½" CONDUIT UNLESS OTHERWISE NOTED. REFERENCE WIRE SIZE TABLE CHART ABOVE. WHERE REQUIRED, CONDUIT AND WIRE SHALL BE UPSIZED TO MEET THE REQUIREMENT OF THE DEVICE BEING SERVED BY THE BRANCH CIRCUIT. WHERE CONDUIT AND WIRING IS INDICATED AT THE HOME RUN, WIRING AND CONDUIT SHALL CONTINUE AT THAT SIZE FOR THE ENTIRE LENGTH OF THE CIRCUIT.
14. CONTRACTOR SHALL FURNISH ADDITIONAL SWITCHLEGS OR HOT WIRES AS REQUIRED TO MEET THE CONTROL INTENT OF THE DOCUMENTS AND AS REQUIRED BY CODE (I.E. EMERGENCY LIGHTING AND SWITCHED RECEPTACLES).
15. MULTIPLE CIRCUITS MAY BE USED IN A SINGLE RACEWAY. NO MORE THAN (3) DEDICATED CIRCUITS OR (4) CURRENT CARRYING CONDUCTORS SHALL BE INSTALLED IN ANY RACEWAY UNLESS OTHERWISE NOTED. WHERE A COMMON GROUNDED CONDUCTOR IS USED FOR MULTIPLE INDIVIDUAL BRANCH CIRCUITS, PER SECTIONS CEC 200.4, 250.122, 310.15(B)(2). CONDUIT SIZE SHALL BE INCREASED AS REQUIRED FOR THE CONDUCTORS INCLUDING TEMPERATURE DERATING PER CEC TABLE C1.
16. FURNISH AND INSTALL JUNCTION BOXES AS REQUIRED TO MEET MAXIMUM BEND REQUIREMENTS FOR PULLING WIRES PER CEC 358.26. JUNCTION BOXES SHALL BE SIZED AS REQUIRED PER CEC 314.28 UNLESS OTHERWISE NOTED.

COMMUNICATIONS PATHWAYS GENERAL NOTES

1. CONDUITS SHALL, (a) CONTAIN NO CONTINUOUS SECTIONS LONGER THAN 30M (98 FT.), AND, (b) CONTAIN NO MORE THAN (2) 90° BENDS OR (1) REVERSE BEND WITHOUT INSTALLING A PULLBOX. SPLIT CONDUITS IN PLACE OF PULLBOXES ARE UNACCEPTABLE.
2. CONDUITS SHALL CONTAIN PLASTIC OR NYLON PULL TAPE RATED AT 200 LBS. WITH A MINIMUM OF 5 FEET OF EXTRA PULL TAPE COILED AT EACH END.
3. CONDUIT BEND RADIUS SHALL BE (a) A MINIMUM OF 6 TIMES THE INTERNAL CONDUIT DIAMETER FOR CONDUITS 2" IN DIAMETER OR LESS, AND, (b) 10 TIMES THE INTERNAL CONDUIT DIAMETER FOR CONDUITS MORE THAN 2" IN DIAMETER.
4. TERMINATE CONDUIT STUBS AND SLEEVES THAT PROTRUDE THROUGH STRUCTURAL FLOORS 2"-3" ABOVE THE FLOOR SURFACE.
5. INSTALL BUSHINGS OR BELL ENDS AS REQUIRED ON ALL CONDUITS.
6. FLEX CONDUIT IS UNACCEPTABLE FOR USE AS A COMMUNICATIONS CONDUIT EXCEPT AT SEISMIC JOINTS AND/OR IF APPROVED IN WRITING BY THE ENGINEER.
7. ALL UNDER SLAB OR IN-SLAB CONDUITS SHALL BE INSTALLED IN A MANNER THAT PREVENTS WATER INFILTRATION OF THE CONDUIT. IT IS THE CONTRACTOR'S RESPONSIBILITY TO ENSURE GROUND WATER, RAIN WATER OR CONSTRUCTION WATER IS PREVENTED FROM ENTERING AND/OR REMOVED FROM THE CONDUITS PRIOR TO PLACEMENT OF COMMUNICATIONS CABLES. SEE ELECTRICAL SPECIFICATIONS, DETAILS AND PLANS FOR ADDITIONAL CONDUIT SEALING REQUIREMENTS.
8. ALL PULLBOXES SHALL BE SIZED AND INSTALLED PER ANSI-TIA-569-C. PULLBOXES FOR IN-UNDER SLAB CONDUIT RUNS ARE NOT PERMITTED UNLESS OTHERWISE NOTED. PULLBOXES FOR OVERHEAD CONDUIT RUNS SHALL BE LOCATED ABOVE ACCESSIBLE CEILINGS WITHIN THE ACCESSIBLE CEILING SPACE AND SUPPORTED INDEPENDENTLY FROM THE STRUCTURE AND CONDUIT SUPPORTS. PULLBOXES FOR ROOF MOUNTED OR EXTERIOR ABOVE GRADE APPLICATIONS SHALL BE NEMA 3R RATED. PULLBOXES SHALL BE SIZED ACCORDING TO THE FOLLOWING:

CONDUIT SIZE	WIDTH	LENGTH	DEPTH	WIDTH INCREASE PER ADDITIONAL CONDUIT
1"	4"	16"	3"	2"
2"	8"	36"	4"	3"
3"	12"	48"	5"	6"
4"	15"	60"	8"	8"

FOR OTHER CONDUIT SIZES REFER TO ANSI/TIA-569-C TABLE 12. - LATEST PUBLISHED EDITION.

9. CONDUIT(S) SHALL EXIT A PULLBOX ON THE WALL OPPOSITE THE WALL ENTERED.
10. PROVIDE LABELING OF EACH CONDUIT PER GENERAL ELECTRICAL SPECIFICATIONS.
11. PROVIDE INTERNAL/EXTERNAL GAS AND WATER TIGHT MECHANICAL SEALING/PLUGGING OF EACH BUILDING ENTRY CONDUIT AS SPECIFIED ELSEWHERE IN THE DRAWINGS AND SPECIFICATIONS.

IDENTIFICATION STAMP
DIV. OF THE STATE ARCHITECT
APP: 02-118630 INC:
REVIEWED FOR
SS ☐ FLS ☐ ACS ☑
DATE: 04/13/2021

OFFICE OF THE STATE FIRE MARSHAL
APPROVED FIRE AND PANIC ONLY
Approval of this plan does not authorize or approve any omission or deviation from applicable regulations. Final approval is subject to field inspection. One set of approved plans shall be available on the project site at all times.
PERMIT NO. 28 N 2332-CP
REVIEWED BY LEO CATAYLO, OSFM
DATE: 4 / /2021

GENERAL SERVICES
Department of General Services
State of California
Real Estate Services Division
Project Management & Development Branch
707 Third Street, Suite 4-105
West Sacramento, California 95605

NICHOLS MELBURG & ROSSETTO
ARCHITECTS + ENGINEERS
300 Knollcrest Drive
Redding, CA. 96002
(530) 222-3300 (530) 222-3538 FAX
http://www.nmrdesign.com

Copyright © 2019
All ideas, designs, arrangements and plans indicated or represented by this drawing are owned by, and the property of, NICHOLS, MELBURG and ROSSETTO and were created, evolved and developed for use on, and in connection with, the specified project. None of such ideas, designs, arrangements or plans shall be used by, or disclosed to, any person, firm or corporation for any purpose whatsoever without the written permission of NICHOLS, MELBURG and ROSSETTO.

LICENSE STAMPS

REGISTERED PROFESSIONAL ENGINEER RAYMOND W. SINGLETARY No. E15610 12/31/2021 CIVIL STATE OF CALIFORNIA
Date Signed 3/25/2021

CONSULTANT
tklsc COLLABORATIVE
11870 Pierce Street, Suite 160
Riverside, California 92505
951.299.4160 www.tk1sc.com
Project Leader - Jerry Leonhardt
Electrical Lead - Reid Cordry
tk1sc Job #:2019-0228A

DRAWING STATUS
CONSTRUCTION DOCUMENTS

ISSUE

No.	Date	Description
1	10/20/2020	INITIAL PLAN REVIEW
2	01/22/2021	AGENCY RESUBMITTAL
3	03/22/2021	AGENCY RESUBMITTAL

If drawing is not 30" x 42" it is a reduced print

PROJECT
RESIDENTIAL CENTER, UKIAH: REPLACEMENT OF EXISTING RESIDENTIAL CENTER
440 EAST HILL ROAD
WILLITS, CALIFORNIA 95490
MENDOCINO COUNTY
CALIFORNIA CONSERVATION CORPS

Supervisor	Designed	Drawn
		Author

DSA Application No.
XX-XXXXXX

SHEET TITLE
WOMEN'S HOUSING POWER AND SIGNAL PLAN

DGS Project Number 000000000001826
NMR Project Number 18-6456

Reference North
Sheet Scale As indicated
Sheet Number E201HW

ISSUE DATE
July 9, 2021

Plot Date: 3/22/2021 9:12:11 AM
File Name: BIM 360:/CCC-Willits Residential Center/E_CCC Willits_DORM-WOMEN_2019-0228A.rvt

KEYNOTES

2.022	PROVIDE 3/4"C.O.(S) TO RESPECTIVE CONTROL DEVICE(S) FOR CONTROL WIRING. REFER TO THE EQUIPMENT CONTROL WIRING DIAGRAMS FOR ADDITIONAL INFORMATION.
2.023	REFER TO MOTORIZED EQUIPMENT SCHEDULE FOR MOTOR FEEDER/ BRANCH CIRCUIT INFORMATION.
5.102	CONNECT AS REQUIRED TO COMBINATION SMOKE/FIRE DAMPER. REFER TO MECHANICAL DRAWINGS FOR EXACT LOCATIONS. CONTRACTOR TO PROVIDE CONTROL RELAY MODULE AT ASSOCIATED HVAC UNIT FOR IMMEDIATE UNIT SHUT DOWN UPON DAMPER CLOSURE PER CMC, SECTION 605.8.

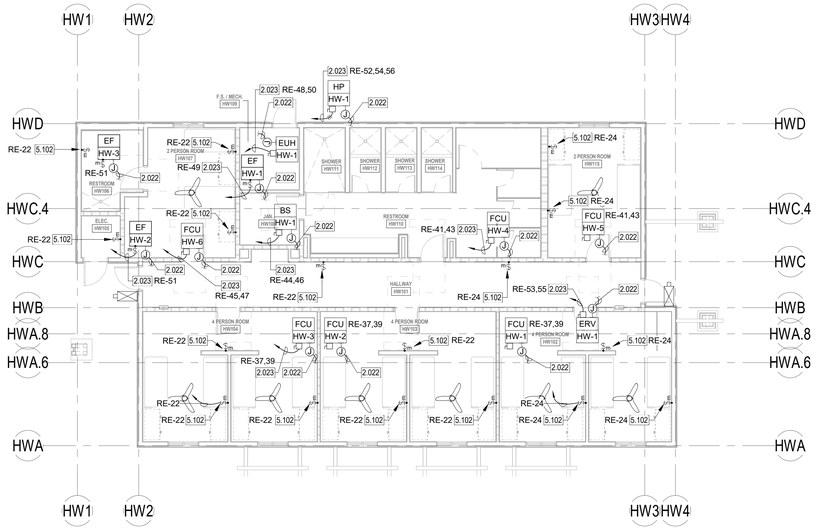

WOMEN'S HOUSING MECHANICAL POWER PLAN

SCALE: 1/8" = 1'-0"

WALL TYPE NOTES

PARTITION SYMBOL

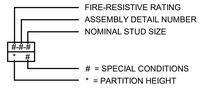

WALL TYPES LEGEND

SEE SHEET G121 FOR ASSEMBLY TYPES

EXTERIOR

2 x 6 WOOD STUD WALL - NON RATED	0-W1-6 * ● #
2 x 12 WOOD STUD WALL - NON RATED	0-W1-12 * ● #

INTERIOR

2 x 4 WOOD STUD WALL - NON RATED	0-W2-4 * ● #
2 x 6 WOOD STUD WALL - NON RATED	0-W2-6 * ● #
2 x 8 WOOD STUD WALL - NON RATED	0-W2-8 * ● #
2 x 12 WOOD STUD WALL - NON RATED	0-W2-12 * ● #
2 x 4 WOOD STUD WALL - ACOUSTIC	0-W5-4 * ● #
2 x 6 WOOD STUD WALL - ACOUSTIC	0-W5-6 * ● #
2 X 4 WOOD STUD WALL - 1-HR FIRE PARTITION W/ PROTECTED OPENINGS	1-W3-4 * ● #
2 X 6 WOOD STUD WALL - 1-HR FIRE PARTITION W/ PROTECTED OPENINGS	1-W3-6 * ● #

MOTORIZED EQUIPMENT SCHEDULE

TAG	ITEM	DESCRIPTION	EQUIPMENT RATING VOLTS	PH.	MOTOR HP	MOTOR FLA	VFD FLA	MCA	MOCP	DISC. SW. SIZE STARTER SIZE	CIRCUIT DATA CONDUIT - WIRE	SPECIFIC NOTES
BS	HW-1	BRANCH SELECTOR	208	1		0.5		0.6	15 A	30AS	3/4"C. - 2#12, 1#12 GRD.	A
EF	HW-1	EXHAUST FAN	115	1	.167	4.4		5.5	15 A	Motor Rated	3/4"C. - 2#12, 1#12 GRD.	A,C
EF	HW-2	EXHAUST FAN	115	1	.167	4.4		5.5	15 A	Motor Rated	3/4"C. - 2#12, 1#12 GRD.	A,C
EF	HW-3	EXHAUST FAN	115	1	.167	4.4		5.5	15 A	Motor Rated	3/4"C. - 2#12, 1#12 GRD.	A,C
ERV	HW-1	ENERGY RECOVERY VENTILATOR UNIT	208	1		7.1		8.9	15 A	30AS	3/4"C. - 2#12, 1#12 GRD.	A
EUH	HW-1	HEATER UNIT	208	1		12.7		15.9	20 A	30AS	3/4"C. - 2#12, 1#12 GRD.	A
FCU	HW-1	FAN COIL UNIT	208	1		1.1		1.4	15 A	30AS	3/4"C. - 2#12, 1#12 GRD.	A
FCU	HW-2	FAN COIL UNIT	208	1		0.5		0.6	15 A	30AS	3/4"C. - 2#12, 1#12 GRD.	A
FCU	HW-3	FAN COIL UNIT	208	1		1.1		1.4	15 A	30AS	3/4"C. - 2#12, 1#12 GRD.	A
FCU	HW-4	FAN COIL UNIT	208	1		1.2		1.5	15 A	30AS	3/4"C. - 2#12, 1#12 GRD.	A
FCU	HW-5	FAN COIL UNIT	208	1		0.5		0.6	15 A	30AS	3/4"C. - 2#12, 1#12 GRD.	A
FCU	HW-6	FAN COIL UNIT	208	1		0.5		0.6	15 A	30AS	3/4"C. - 2#12, 1#12 GRD.	A
HP	HW-1	HEAT PUMP	208	3		30.5		38.1	45 A	60AS	1"C. - 3#6, 1#8 GRD.	A

POWER PLAN GENERAL NOTES:

1. ALL RECEPTACLES ON COMMON WALLS SHALL BE SEPARATE BOXES AND OFFSET 24-INCHES MINIMUM.
2. ALL PENETRATIONS THROUGH FIRE RATED WALLS SHALL BE PROTECTED FROM THE SPREAD OF FIRE WITH AN APPROVED FIRESTOP SYSTEM EQUAL OR GREATER THAN THE FIRE RATING OF THE WALL.
3. ALL WALL-MOUNTED DEVICE HEIGHTS SHALL BE VERIFIED WITH THE ARCHITECT PRIOR TO ROUGH-IN.
4. ALL FURNITURE FEED LOCATIONS TO BE VERIFIED WITH ARCHITECT AND FURNITURE VENDOR PRIOR TO ROUGH-IN.
5. ALL FURNITURE WHIPS SHALL BE TRIMMED TO REDUCE EXCESS WHIP LENGTH.
6. WHEN EXPOSED CEILINGS OR OPEN GRID CONDITIONS OCCUR, THE CONTRACTOR WILL NEED TO PROVIDE THE FOLLOWING ITEMS:
   - ALL BRANCH CIRCUITS SHALL BE IN EMT.
   - ALL BRANCH CIRCUITS SHALL BE ROUTED NEATLY AND IN PARALLEL TO STRUCTURES OR DUCT WORK.
   - VISUALLY OBJECTIONABLE BRANCH CIRCUITS SHALL BE REROUTED AT THE REQUEST OF THE ARCHITECT AT NO ADDITIONAL COST.
7. EXPOSED CABLE/CONDUCTORS INSTALLED IN A PLENUM SPACE SHALL CONFORM TO NEC, OR CEC WHERE ADOPTED, ARTICLE 300.22(C).
8. PROVIDE G.F.C.I. TYPE RECEPTACLE(S) OR RECEPTACLE(S) PROTECTED BY A GFCI CIRCUIT BREAKER(S) WHEN LOCATED WITHIN 6 FEET OF ANY SINK OR THERAPEUTIC TUB, LAUNDRY AREA, SERVING ANY DRINKING FOUNTAIN OR VENDING MACHINE, WITHIN ANY KITCHEN SPACE AND/OR LOCATED OUTDOORS. WHERE RECEPTACLES ARE NOT READILY ACCESSIBLE, PROVIDE GFCI CIRCUIT BREAKER(S) TO PROTECT THE RESPECTIVE BRANCH CIRCUIT AND PROVIDE ADDITIONAL NEUTRAL CONDUCTORS IN THE BRANCH CIRCUITING AS REQUIRED TO ENSURE PROPER GFCI FUNCTION
9. PROVIDE OCCUPANCY SENSOR/LIGHTING CONTROL SYSTEM CONTROLLED RECEPTACLE RELAY(S) AS REQUIRED TO SWITCH CONTROLLED RECEPTACLES. CONNECT BRANCH CIRCUITRY AND CONTROL WIRING AS REQUIRED TO ALLOW OCCUPANCY SENSOR/LIGHTING CONTROL SYSTEM RELAY TO SWITCH STANDALONE AND/OR SYSTEMS FURNITURE CONTROLLED RECEPTACLES AS INDICATED ON PLANS. PROVIDE ADDITIONAL CONDUIT, WIRING AND PATHWAYS NECESSARY TO CONNECT BRANCH CIRCUITRY AND CONTROL WIRING TO REMOTE RELAYS TO INCLUDE RELAY(S) LOCATED ON ALTERNATE FLOORS, IN ELECTRICAL ROOMS, ETC.
10. UNLESS SPECIFICALLY SHOWN AS (E), (R), (ER), (D), EXISTING OR NON-BOLD, ALL ELECTRICAL DEVICES SHOWN ARE NEW.
11. PROVIDE REDUNDANT GROUND PATH IN ALL BRANCH CIRCUITS SERVING PATIENT CARE AREAS CONSISTING OF A SEPARATE, INSULATED EQUIPMENT GROUNDING CONDUCTOR PER NEC, OR CEC WHERE ADOPTED, ART 517.13.
12. CONTRACTOR SHALL PROVIDE CONDUIT AND WIRE FOR ALL DEVICES TO PANELBOARD(S) INDICATED ON PLANS FOR A COMPLETE AND OPERABLE SYSTEM.
13. CONTRACTOR SHALL PROVIDE MINIMUM 2#12, 1#12G IN ½" CONDUIT UNLESS OTHERWISE NOTED. REFERENCE WIRE SIZE TABLE CHART ABOVE. WHERE REQUIRED, CONDUIT AND WIRE SHALL BE UPSIZED TO MEET THE REQUIREMENT OF THE DEVICE BEING SERVED BY THE BRANCH CIRCUIT. WHERE CONDUIT AND WIRING IS INDICATED AT THE HOME RUN, WIRING AND CONDUIT SHALL CONTINUE AT THAT SIZE FOR THE ENTIRE LENGTH OF THE CIRCUIT.
14. CONTRACTOR SHALL FURNISH ADDITIONAL SWITCHLEGS OR HOT WIRES AS REQUIRED TO MEET THE CONTROL INTENT OF THE DOCUMENTS AND AS REQUIRED BY CODE (I.E. EMERGENCY LIGHTING AND SWITCHED RECEPTACLES).
15. MULTIPLE CIRCUITS MAY BE USED IN A SINGLE RACEWAY. NO MORE THAN (3) DEDICATED CIRCUITS OR (4) CURRENT CARRYING CONDUCTORS SHALL BE INSTALLED IN ANY RACEWAY UNLESS OTHERWISE NOTED. WHERE A COMMON GROUNDED CONDUCTOR IS USED FOR MULTIPLE INDIVIDUAL BRANCH CIRCUITS, PER SECTIONS CEC 200.4, 250.122, 310.15(B)(2), CONDUIT SIZE SHALL BE INCREASED AS REQUIRED FOR THE CONDUCTORS INCLUDING TEMPERATURE DERATING PER CEC TABLE C1.
16. FURNISH AND INSTALL JUNCTION BOXES AS REQUIRED TO MEET MAXIMUM BEND REQUIREMENTS FOR PULLING WIRES PER CEC 358.26. JUNCTION BOXES SHALL BE SIZED AS REQUIRED PER CEC 314.28 UNLESS OTHERWISE NOTED.

MOTORIZED EQUIPMENT SCHEDULE GENERAL NOTES:

1. ALL BRANCH CIRCUIT DATA IS BASED UPON METALLIC CONDUITS. IF THE CONTRACTOR ELECTS TO USE NONMETALLIC CONDUITS, AN EQUIPMENT GROUNDING CONDUCTOR SHALL BE INSTALLED PER NEC, OR CEC WHERE ADOPTED, TABLE 250.122 AND THE CONDUIT SIZE SHALL BE INCREASED ACCORDINGLY.
2. ELECTRICAL CONTRACTOR SHALL REFER TO ALL DOCUMENTS RELATED TO THE EQUIPMENT (I.E. SHOP DRAWINGS, CONSTRUCTION DOCUMENTS, ETC.) IN REGARDS TO ELECTRICAL CHARACTERISTICS OF ALL EQUIPMENT LISTED IN THE SCHEDULE. ANY MODIFICATION AND/OR ADDITIONAL WORK NECESSARY SHALL BE INCLUDED IN THE BASE BID.
3. ELECTRICAL CONTRACTOR SHALL CHECK THE ROTATION OF ALL THREE PHASE MOTORS AND CORRECT THE ROTATION IF REVERSED.
4. ELECTRICAL CONTRACTOR SHALL PROVIDE FUSES SIZED PER THE EQUIPMENT NAMEPLATE INFORMATION.
5. DISCONNECT SWITCHES SHALL BE HEAVY DUTY TYPE, EXTERNALLY OPERATED, QUICK MAKE QUICK BREAK AND SHALL BE FUSIBLE OR NON FUSIBLE AS INDICATED. A MAXIMUM VOLTAGE, CURRENT AND HORSEPOWER SHALL BE CLEARLY MARKED ON SWITCH ENCLOSURE. SWITCHES HAVING DUAL RATINGS (HIGHER RATINGS WHEN USED WITH DUAL ELEMENT FUSES) SHALL HAVE RATINGS INDICATED ON METAL PLATES RIVETED OR OTHERWISE PERMANENTLY ATTACHED TO THE ENCLOSURE. WHEN INDICATED, TOGGLE SWITCHES SHALL BE MOTOR RATED FOR THE APPLICATION.
6. STARTERS SHALL BE FULL VOLTAGE, REDUCED VOLTAGE OR COMBINATION DISCONNECT AND STARTER, WITH CONTROL VOLTAGE AS REQUIRED, AS INDICATED ON THE DOCUMENTS RELATED TO THE EQUIPMENT, SUCH AS SHOP DRAWINGS, CONSTRUCTION DOCUMENTS, ETC. STARTERS SHALL INCLUDE MOTOR OVERLOAD PROTECTION, PHASE LOSS AND PHASE UNBALANCE PROTECTION AS REQUIRED.
7. ALL TERMINATIONS AND ENCLOSURES SHALL BE RATED FOR USE WITH 75 DEGREE C CONDUCTORS.
8. COMPLETE INSTALLATION SHALL CONFORM TO THE REQUIREMENTS OF NEC (OR CEC WHERE ADOPTED) ARTICLES 430 AND 440.
9. CONTRACTOR TO COORDINATE WITH ALL OTHER PROJECT TRADES AND WITH OWNER/ TENANT FOR TO OBTAIN RESPECTIVE EQUIPMENT SCCR AND PROVIDE APPROPRIATE PROTECTIVE DEVICES TO LIMIT AVAILABLE FAULT CURRENT TO LESS THAN THE EQUIPMENT NAMEPLATE SCCR PER NEC (OR CEC WHERE ADOPTED) 110.10. SEE POWER SYSTEM STUDY SPECIFICATIONS FOR ADDITIONAL REQUIREMENTS.
10. UNLESS OTHERWISE NOTED, MOCP VALUES FOR VFD-EQUIPPED DEVICE ARE SIZED PER NEC (OR CEC WHERE ADOPTED) 430.130(A).1. CONTRACTOR SHALL COORDINATE WITH ALL OTHER PROJECT TRADES AND WITH OWNER/ TENANT (IF PROVIDING EQUIPMENT ON PROJECT) TO OBTAIN NAMEPLATE VFD-EQUIPPED DEVICE MOCP VALUE FROM MANUFACTURER INSTALLATION INSTRUCTIONS AND PROVIDE APPROPRIATE PROTECTIVE DEVICES TO COMPLY WITH NEC (OR CEC WHERE ADOPTED) 430.130(A).2.

MOTORIZED EQUIPMENT SCHEDULE SPECIFIC NOTES:

A. FUSED AS RECOMMENDED BY MANUFACTURER.

B. MAGNETIC MOTOR STARTER WITH CONTROL TRANSFORMER, AUXILIARY CONTACTS, INDICATOR LIGHT AND H.O.A. SWITCH. VERIFY CONTROL TRANSFORMER VOLTAGE WITH M.C. PRIOR TO ORDERING MATERIAL.

C. ROUTE THROUGH LINE VOLTAGE CONTROL. SEE MECHANICAL AND/OR PLUMBING PLANS FOR ADDITIONAL REQUIREMENTS.

D. VERIFY LOCATION WITH PLUMBING PLANS PRIOR TO ROUGH-IN. CONNECT TO AQUASTAT AND TIME CLOCK AS REQUIRED.

E. REMOTE VFD. PROVIDE EARLY BREAK CONTACTS ON ANY DISCONNECT SWITCHES REQUIRED BY CODE OR SHOWN ON PLANS THAT ARE DOWNSTREAM OF THE REMOTE VFD. PROVIDE CONDUIT AND CONDUCTORS AS REQUIRED TO INTERCONNECT THE CONTACT WITH VFD "ENABLE" TERMINALS. REFER TO MECHANICAL AND/OR PLUMBING PLANS FOR LOCATION. PROVIDE FEEDER(S) TO CONNECT REMOTE VFD AND MOTOR(S) AS REQUIRED.

F. INTEGRAL VFD PROVIDED WITH EQUIPMENT. REFER TO MECHANICAL AND/OR PLUMBING PLANS FOR LOCATION. CONNECT TO VFD AS REQUIRED.

G. INTEGRAL DISCONNECT PROVIDED WITH EQUIPMENT. REFER TO MECHANICAL AND/OR PLUMBING PLANS FOR LOCATION. CONNECT TO INTEGRAL DISCONNECT AS REQUIRED.

H. INTEGRAL DISCONNECT PROVIDED WITH VFD. REFER TO MECHANICAL AND/OR PLUMBING PLANS FOR LOCATION. CONNECT TO INTEGRAL DISCONNECT AS REQUIRED.

J. INDOOR UNIT POWERED FROM RESPECTIVE OUTDOOR UNIT. PROVIDE POWER AND CONTROL WIRING AS REQUIRED.

K. ROUTE THROUGH LINE VOLTAGE CONTROL FOR KITCHEN HOOD FIRE SUPPRESSION SYSTEM. SEE MECHANICAL, FIRE ALARM AND FOOD SERVICE PLANS FOR ADDITIONAL REQUIREMENTS.

IDENTIFICATION STAMP
DIV. OF THE STATE ARCHITECT
APP: 02-118630 INC:
REVIEWED FOR
SS ☐ FLS ☐ ACS ☑
DATE: 04/13/2021

OFFICE OF THE STATE FIRE MARSHAL
APPROVED FIRE AND PANIC ONLY
Approval of this plan does not authorize or approve any omission or deviation from applicable regulations. Final approval is subject to field inspection. One set of approved plans shall be available on the project site at all times.
PERMIT NO.: 26-N 2332-CP
REVIEWED BY: LEO CATALLO, OSFM
DATE: 4/1/2021

GENERAL SERVICES
Department of General Services
State of California
Real Estate Services Division
Project Management & Development Branch
707 Third Street, Suite 4-105
West Sacramento, California 95605

NICHOLS MELBURG & ROSSETTO
ARCHITECTS + ENGINEERS
300 Knollcrest Drive
Redding, CA. 96002
(530) 222-3300 (530) 222-3538 FAX
http://www.nmrdesign.com

Copyright © 2019
All ideas, designs, arrangements and plans indicated or represented by this drawing are owned by, and the property of, NICHOLS, MELBURG and ROSSETTO and were created, evolved and developed for use on, and in connection with, the specified project. None of such ideas, designs, arrangements or plans shall be used by, or disclosed to, any person, firm or corporation for any purpose whatsoever without the written permission of NICHOLS, MELBURG and ROSSETTO.

LICENSE STAMPS

REGISTERED PROFESSIONAL ENGINEER RAYMOND W. SWEET JR. No. E15610 12/31/2021 ELECTRICAL STATE OF CALIFORNIA
Date Signed: 3/25/2021

CONSULTANT
tk1sc COLLABORATIVE
11870 Pierce Street, Suite 160
Riverside, California 92505
951.299.4160 www.tk1sc.com
Project Leader - Jerry Leonhardt
Electrical Lead - Reid Cordry
tk1sc Job #:2019-0228A

DRAWING STATUS
CONSTRUCTION DOCUMENTS

ISSUE

No.	Date	Description
1	10/20/2020	INITIAL PLAN REVIEW
2	01/22/2021	AGENCY RESUBMITTAL
3	03/22/2021	AGENCY RESUBMITTAL

If drawing is not 30" x 42" it is a reduced print

PROJECT
RESIDENTIAL CENTER, UKIAH: REPLACEMENT OF EXISTING RESIDENTIAL CENTER
440 EAST HILL ROAD
WILLITS, CALIFORNIA 95490
MENDOCINO COUNTY
CALIFORNIA CONSERVATION CORPS

Supervisor	Designed	Drawn
		Author

DSA Application No.
XX-XXXXX

SHEET TITLE
WOMEN'S HOUSING MECHANICAL POWER PLAN

DGS Project Number: 000000000001826
NMR Project Number: 18-6456

Reference North
Sheet Scale: As indicated
Sheet Number: E301HW

ISSUE DATE
July 9, 2021

Plot Date: 3/23/2021 3:53:33 PM
File Name: BIM 360://CCC Willits Residential Center/E_CCC Willits_DGRM-WOMEN_2019-0228A.rvt

PANEL: RE (TYPICAL FOR RD AND RF)

MOUNTING: Surface
NEMA 3R: No
FEED THRU: No
M.L.O.: No

DOUBLE-LUGS: No
200% NEUTRAL: No
I/G BUS: No

VOLTS: 120/208 Wye
PHASE: 3
WIRE: 4
AIC: 10,000

SUPPLY FROM: DBH
LOCATION: ELEC. HW105
MCB: 150-3P
BUS: 225A

NOTE	DESCRIPTION	BKR	POLE	TYPE	CIRC	A		B		C		CIRC	TYPE	POLE	BKR	DESCRIPTION	NOTE
	R Room HW105, HW106	20 A	1	R	1	360	540					2	R	1	20 A	R HALLWAY HW101	
	R 2 PERSON ROOM HW107	20 A	1	R	3			540	540			4	R	1	20 A	R 4 PERSON ROOM HW104	
	R Room HW109, HW108	20 A	1	R	5					540	360	6	R	1	20 A	R 4 PERSON ROOM HW104	
	R 2 PERSON ROOM HW115	20 A	1	R	7	540	540					8	R	1	20 A	R 4 PERSON ROOM HW103	
	R EXTERIOR	20 A	1	R	9			180	360			10	R	1	20 A	R 4 PERSON ROOM HW103	
	R EXTERIOR	20 A	1	R	11					180	540	12	R	1	20 A	R 4 PERSON ROOM HW102	
	R HALLWAY HW101	20 A	1	R	13	180	360					14	R	1	20 A	R 4 PERSON ROOM HW102	
	P RESTROOM HW106 HAND DRYER	20 A	1	P	15			1000	3000			16	P	2	40 A	P F.S. / MECH. HW109 EWH	
	P RESTROOM HW110 HAND DRYER	20 A	1	P	17					1000	3000	18	--	--	--	--	--
	P RESTROOM HW110 HAND DRYER	20 A	1	P	19	1000	150					20	P	1	20 A	P EWH BOOSTER FAN	
	R ELEC. HW105	30 A	1	R	21			1000	800			22	M	1	20 A	M 4 PERSON ROOM HW104	
	FCU LIGHTS	20 A	1	L, R	23					579	800	24	M	1	20 A	M 4 PERSON ROOM HW103	
	FCU LIGHTS	20 A	1	L, R	25	579	0					26	--	1	20 A	SPARE	
--	SPACE	--	--	--	27			0	0			28	--	--	--	SPACE	--
--	SPACE	--	--	--	29					0	0	30	--	--	--	SPACE	--
					31							32					
					33							34					
					35							36					
	M FCU HW-1, HW-2, HW-3	20 A	2	M	37	280	562					38	L	1	20 A	L Room HW104, HW103, HW102	
--	--	--	--	--	39			280	534			40	L	1	20 A	Room HW108, HW109, HW111, HW112, HW113,...	
	M FCU HW-4	15 A	2	M	41					175	161	42	L	1	20 A	L EXTERIOR	H
--	--	--	--	--	43	175	50					44	M	2	15 A	M BS HW-1	
	M FCU HW-6	15 A	2	M	45			50	50			46	--	--	--	--	--
--	--	--	--	--	47					50	1325	48	M	2	20 A	M EUH HW-1	
	M EF HW-1	15 A	1	M	49	510	1325					50	--	--	--	--	--
	M EF HW-2, HW-3	20 A	1	M	51			1020	3663			52	M	3	45 A	M HP HW-1	
	M ERV HW-1	15 A	2	M	53					740	3663	54	--	--	--	--	--
--	--	--	--	--	55	740	3663					56	--	--	--	--	--
	P Room HW104, HW103, HW107	30 A	1	P	57			2030	0			58	--	1	20 A	SPARE	
	P Room HW102, HW115	20 A	1	P	59					1500	0	60	--	1	20 A	SPARE	
	SPARE	20 A	1	--	61	0	0					62	--	1	20 A	SPARE	
--	SPACE	--	--	--	63			0	0			64	--	--	--	SPACE	--
--	SPACE	--	--	--	65					0	0	66	--	--	--	SPACE	--
				PHASE TOTALS:		11554.33 VA		15047.33 VA		14613.33 VA							
						96.3 A		129.3 A		125.7 A							

COMMENTS:

LOAD TYPE KEY	LOAD CLASSIFICATION	CONNECTED LOAD	AVG. DEMAND...	ESTIMATED DEMAND	PANEL TOTALS	AMPS	KVA
H = HVAC EQUIP	P	12.68 kVA	100.00%	12.68 kVA			
K = KITCHEN	R	7.84 kVA	100.00%	7.84 kVA	TOTAL CONNECTED LOAD:	114.4 A	41.22 kVA
L = LIGHTING	L	1.34 kVA	125.00%	1.67 kVA	TOTAL DEMAND LOAD:	123.0 A	44.30 kVA
M = MOTOR	M	19.36 kVA	114.19%	22.11 kVA	HIGH PHASE:	129 A	15.05 kVA
P = POWER							
R = RECEPTACLE							
W = WATER HEATER							

PANEL SCHEDULE GENERAL NOTES:

1. WHERE PANEL IS INDICATED TO INCLUDE FEED THRU LUGS, PROVIDE FEED THROUGH LUGS AT THE OPPOSITE END OF THE PANELBOARD FROM THE PANELBOARD MAIN LUGS.
2. WHERE PANEL IS INDICATED TO INCLUDE DOUBLE LUGS, PROVIDE A DOUBLE LUG KIT AT THE SAME END OF THE PANELBOARD AS THE PANELBOARD MAIN LUGS.
3. WHERE PANEL IS INDICATED TO INCLUDE 200% NEUTRAL, PROVIDE PANELBOARDS UL LISTED AS HAVING NEUTRAL BUSSES RATED TO CARRY 200 PERCENT OF THE CURRENT CARRYING CAPACITY OF THE PHASE BUSSING. OTHERWISE, NEUTRAL BUSSING TO BE FULL SIZE AND RECTANGULAR.
4. WHERE PANEL IS INDICATED TO INCLUDE AN I/G BUS, PROVIDE PANELBOARDS WITH AN ISOLATED GROUND BUS, DRILLED AND TAPPED FOR NUMBER OF ISOLATED GROUND CONDUCTORS SHOWN, AS WELL AS FOR ALL SPARES AND SPACES SHOWN ON THE PANELBOARD.
5. WHERE PANEL CIRCUIT BREAKER RATING IS SHOWN AS SERIES RATED, PROVIDE CIRCUIT BREAKERS IN PANELBOARD WHICH ARE SERIES RATED WITH THE UPSTREAM SYSTEM FOR THE AVAILABLE FAULT CURRENT. THE PANELBOARD SHALL BE MARKED WITH THE SERIES CONNECTED RATINGS, AS WELL AS ALL MARKING AS REQUIRED BY THE NEC, OR CEC WHERE ADOPTED, 240-83(C).
6. WHERE PANEL IS INDICATED AS RECESSED OR FLUSH MOUNTED, PROVIDE SPARE CONDUITS STUBBED UP INTO THE ACCESSIBLE CEILING SPACE. PROVIDE ONE (1) 3/4" CONDUIT ONLY FOR EACH THREE (3) SPARES OR SPACES, MINIMUM OF TWO (2). EACH CONDUIT SHALL BE TAGGED, CAPPED AND MARKED FOR FUTURE USE.
7. ALL BUSSING SHALL BE TIN PLATED ALUMINUM.
8. ALL CIRCUIT BREAKERS USED AS SWITCHES SHALL BE UL LISTED AND LABELED "SWD" FOR SWITCHING DUTY.
9. PROVIDE BREAKER INTERLOCK WITH ADJACENT BREAKER(S) FOR ANY MULTI-WIRE BRANCH CIRCUIT. BREAKER INTERLOCK GROUPING SHALL BE BY BRANCH CIRCUIT GROUP (i.e. MULTIPLE CIRCUITS SHARING A COMMON NEUTRAL (NEC, OR CEC WHERE ADOPTED, 210.4 (B),) COMMON YOKE (NEC, OR CEC WHERE ADOPTED, 210.7(B) ,) OR FURNITURE SYSTEM NEC OR CEC WHERE ADOPTED, 605.6 AND 605.7). WHERE AN EXISTING PANEL IS BEING ALTERED OR MODIFIED IN ANY WAY, CONTRACTOR SHALL INCLUDE ALL COSTS IN BASE BID TO ADD BREAKER INTERLOCKS TO EXISTING MULTI-WIRE BRANCH CIRCUITS BASED ON CONTRACTOR'S INVESTIGATION OF EXISTING CONDITIONS.
10. PROVIDE BREAKER LOCK OFF DEVICE ON ANY CIRCUIT BREAKER FEEDING A TRANSFORMER AS REQUIRED, PER NEC, OR CEC WHERE ADOPTED, 450.14. WHERE AN EXISTING PANEL IS BEING ALTERED OR MODIFIED IN ANY WAY, CONTRACTOR SHALL INCLUDE ALL COSTS IN BASE BID TO ADD BREAKER LOCK-OFF DEVICES TO EXISTING TRANSFORMER CIRCUIT BREAKERS BASED ON CONTRACTOR'S INVESTIGATION OF EXISTING CONDITIONS.
11. ALL CIRCUIT BREAKERS SHALL BE BOLT-ON TYPE AND SHALL BE SUITABLE FOR 75 DEGREE AMPACITY CONDUCTORS.
12. PANELS SHALL BE OF THE DEAD FRONT SAFETY TYPE. PANELS SHALL BE MINIMUM 20" WIDE AND 5-3/4" DEEP UNLESS OTHERWISE NOTED ON PLAN.
13. COORDINATE WITH APPLICABLE TRADE TO INSURE RECESSED MOUNTED PANELBOARDS WILL SEAT FLUSH IN THE WALLS PROVIDED. PANEL TRIMS SHALL HAVE CONCEALED DOORS AND FASTENERS WITH FLUSH TYPE COMBINATION LOCK AND CATCH, TWO MILLED TYPE KEYS SUPPLIED WITH EACH PANEL. ALL LOCKS SHALL BE KEYED ALIKE AND EACH DOOR SHALL HAVE A PLASTIC COVERED DIRECTORY FRAME WITH A TYPED IDENTIFICATION CARD OF ALL CIRCUIT AND PANEL NUMBERS FOR BRANCH CIRCUIT PANELBOARDS.
14. UPON PROJECT COMPLETION, CONTRACTOR SHALL INSTALL TYPED AS-BUILT PANEL DIRECTORIES IN EACH PANEL WITHIN THE MFGR-PROVIDED DIRECTORY HOLDER. THE DIRECTORY SHALL CLEARLY IDENTIFY EACH CIRCUIT TO ITS CLEAR, EVIDENT, AND SPECIFIC PURPOSE OR USE. EACH CIRCUIT IDENTITY SHALL INCLUDE SUFFICIENT DETAIL TO ALLOW EACH CIRCUIT TO BE DISTINGUISHED FROM ALL OTHERS PER NEC, OR CEC WHERE ADOPTED, ART 408.1 AND 408.4 . HANDWRITTEN DIRECTORIES ARE UNACCEPTABLE. COPIES OF AS-BUILT PANEL SCHEDULES SHALL BE PLACED IN PANEL DIRECTORIES. E.C. TO INCLUDE ALL COSTS REQUIRED FOR LARGER-THAN-STANDARD CUSTOM PANEL DIRECTORY HOLDERS TO ACCOMMODATE COPIES OF AS-BUILT PANEL SCHEDULES.
15. PANELBOARDS SHALL BE MANUFACTURED BY G.E., CUTLER-HAMMER, SIEMENS, OR SQUARE "D". FUSED PANEL BOARDS SHALL BE BY COOPER BUSSMANN.
16. PROVIDE SHOP DRAWING SUBMITTAL PER THE ELECTRICAL SPECIFICATION SUBMITTAL REQUIREMENTS FOR EACH PANEL DEPICTING CONFORMANCE WITH THE ABOVE NOTES AND SCHEDULES.

SPECIFIC PANEL SCHEDULE NOTES:

"A" PROVIDE LOCK-ON DEVICE.
"B" PROVIDE LOCK-OFF DEVICE.
"C" PROVIDE SHUNT TRIP DEVICE.
"D" PROVIDE GFCI TYPE DEVICE.
"E" PROVIDE A RED CIRCUIT BREAKER.
"F" PROVIDE A NEW BREAKER TO MATCH THE EXISTING IN PANEL.
"G" EXISTING BREAKER WITH NEW LOAD.
"H" PROVIDE RELAY AS REQUIRED FOR CONTROL OF EXTERIOR LIGHTING BY PHOTOCELL ON / TIMECLOCK OFF. MOUNT RELAY IN SEPARATE BARRIERED COMPARTMENT OF PANELBOARD.

PANEL SCHEDULE INDEX		
XXXX	XXXX	RE
XXXX	XXXX	XXXX
XXXX	XXXX	XXXX

IDENTIFICATION STAMP
DIV. OF THE STATE ARCHITECT
APP: 02-118630 INC:
REVIEWED FOR
SS ☐ FLS ☐ ACS ☑
DATE: 04/13/2021

OFFICE OF THE STATE FIRE MARSHAL
APPROVED FIRE AND PANIC ONLY
Approval of this plan does not authorize or approve any omission or deviation from applicable regulations. Final approval is subject to field inspection. One set of approved plans shall be available on the project site at all times.
PERMIT NO: 20 N 2332 CP
REVIEWED BY: LEO CATAYLO, OSFM
DATE: 4/ /2021

GENERAL SERVICES
Department of General Services
State of California
Real Estate Services Division
Project Management & Development Branch
707 Third Street, Suite 4-105
West Sacramento, California 95605

NICHOLS MELBURG & ROSSETTO
ARCHITECTS + ENGINEERS
300 Knollcrest Drive
Redding, CA. 96002
(530) 222-3300 (530) 222-3538 FAX
http://www.nmrdesign.com

Copyright © 2019
All ideas, designs, arrangements and plans indicated or represented by this drawing are owned by, and the property of, NICHOLS, MELBURG and ROSSETTO and were created, evolved and developed for use on, and in connection with, the specified project. None of such ideas, designs, arrangements or plans shall be used by, or disclosed to any person, firm or corporation for any purpose whatsoever without the written permission of NICHOLS, MELBURG and ROSSETTO.

LICENSE STAMPS

REGISTERED PROFESSIONAL ENGINEER
RAYMOND W. SWEETEN
No. E15610
12/31/2021
ELECTRICAL
STATE OF CALIFORNIA
Date Signed
3/25/2021

CONSULTANT
tklsc COLLABORATIVE
11870 Pierce Street, Suite 160
Riverside, California 92505
951.299.4160 www.tk1sc.com
Project Leader - Jerry Leonhardt
Electrical Lead - Reid Cordry
tk1sc Job #:2019-0228A

DRAWING STATUS
CONSTRUCTION DOCUMENTS

ISSUE

No.	Date	Description
1	10/20/2020	INITIAL PLAN REVIEW
2	01/22/2021	AGENCY RESUBMITTAL
3	03/22/2021	AGENCY RESUBMITTAL

If drawing is not 30" x 42" it is a reduced print

PROJECT
RESIDENTIAL CENTER, UKIAH: REPLACEMENT OF EXISTING RESIDENTIAL CENTER
440 EAST HILL ROAD
WILLITS, CALIFORNIA 95490
MENDOCINO COUNTY
CALIFORNIA CONSERVATION CORPS

Supervisor	Designed	Drawn
		Author

DSA Application No.
XX-XXXXXX

SHEET TITLE
WOMEN'S HOUSING PANEL SCHEDULES

DGS Project Number	NMR Project Number
000000000001826	18-6456

Reference North: NORTH
Sheet Scale: 12" = 1'-0"
Sheet Number: E407HW

ISSUE DATE
July 9, 2021

Plot Date: 3/22/2021 3:53:37 PM
File Name: BIM 360://CCC Willits Residential Center/E_CCC Willits_DORM-WOMEN_2019-0228A.rvt

STATE OF CALIFORNIA
Indoor Lighting
NRCC-LTI-E
CALIFORNIA ENERGY COMMISSION

CERTIFICATE OF COMPLIANCE		NRCC-LTI-E
Project Name:	Replacement of Existing Residential Center	Report Page: (Page 6 of 7)
Project Address:	440 East Hill Road	Date Prepared: 10/20/2020

U. DECLARATION OF REQUIRED CERTIFICATES OF ACCEPTANCE

Selections have been made based on information provided in this document. If any selection have been changed by the permit applicant, an explanation should be included in Table E. Additional Remarks. These documents must be provided to the building inspector during construction and any with "-A" in the form name must be completed through an Acceptance Test Technician Certification Provider (ATTCP). For more information visit: http://www.energy.ca.gov/title24/attcp/providers.html

Yes	No	Form/Title	Field Inspector Pass	Field Inspector Fail
●	○	NRCA-LTI-02-A - Must be submitted for occupancy sensors and automatic time switch controls.	☐	☐
○	●	NRCA-LTI-03-A - Must be submitted for automatic daylight controls.	☐	☐
●	○	NRCA-LTI-04-A - Must be submitted for demand responsive lighting controls.	☐	☐
○	●	NRCA-LTI-05-A. - Must be submitted for institutional tuning power adjustment factor (PAF)	☐	☐

Registration Number: | Registration Date/Time: | Registration Provider: EnergySoft

CA Building Energy Efficiency Standards - 2019 Nonresidential Compliance | Report Version: 2019.0.001 Schema Version: rev 20190401 | Report Generated: 2020-10-20 09:11:49

STATE OF CALIFORNIA
Indoor Lighting
NRCC-LTI-E
CALIFORNIA ENERGY COMMISSION

CERTIFICATE OF COMPLIANCE		NRCC-LTI-E
Project Name:	Replacement of Existing Residential Center	Report Page: (Page 3 of 7)
Project Address:	440 East Hill Road	Date Prepared: 10/20/2020

F. INDOOR LIGHTING FIXTURE SCHEDULE

3	3 - LED Torchlight d'	No	No	16	JA8 Lamp	3	No	48	☐	☐
7	7 - LED Surface - Shower	No	No	12	JA8 Lamp	8	No	96	☐	☐
9	9 - Recessed LED Downlight	No	No	10.9	JA8 Lamp	25	No	272.5	☐	☐
								Total Designed Watts: CONDITIONED SPACES		1,199.8

†FOOTNOTE: Design Watts for small aperture and color changing luminaires which qualify per §140.6(a)4B is adjusted to be 75% of their rated wattage. Table F automatically makes this adjustment, the permit applicant should enter full rated wattage in column D5.

G. MODULAR LIGHTING SYSTEMS

This section does not apply to this project.

H. INDOOR LIGHTING CONTROLS (Not including PAFs)

*This table includes lighting controls for conditioned and unconditioned spaces. When an control having a * is shown, the notes section of this table provides more detail on how compliance is achieved. The lighting controls section of the Compliance Summary Table on the first page will show "DOES NOT COMPLY" if the notes are left blank.*

Building Level Controls

01	02	03 Field Inspector Pass	03 Field Inspector Fail
Mandatory Demand Response §110.12(c)	Shut-off controls §130.1(c)		
Required 10,000 SF	Whole Building Auto Time Switch	☐	☐

Area Level Controls

04	05	06	07	08	09	10	11	12 Field Inspector Pass	12 Field Inspector Fail
Area Description	Complete Building or Area Category Primary Function Area	Area Controls §130.1(a)	Multi-Level Controls §130.1(b)	Shut-Off Controls §130.1(c)	Primary/Skylit Daylighting §130.1(d)	Secondary Daylighting §140.6(d)	Interlocked Systems §140.6(a)1		

*NOTES: Controls with a * require a note in the space below explaining how compliance is achieved.
EX: Conference 1: Primary/Skylight Daylighting: Exempt because less than 120 watts of general lighting; EXCEPTION 1 to §130.1(d)2

13
Plan Sheet Showing Daylit Zones:

Registration Number: | Registration Date/Time: | Registration Provider: EnergySoft

CA Building Energy Efficiency Standards - 2019 Nonresidential Compliance | Report Version: 2019.0.001 Schema Version: rev 20190401 | Report Generated: 2020-10-20 09:11:49

STATE OF CALIFORNIA
Indoor Lighting
NRCC-LTI-E
CALIFORNIA ENERGY COMMISSION

CERTIFICATE OF COMPLIANCE		NRCC-LTI-E
Project Name:	Replacement of Existing Residential Center	Report Page: (Page 1 of 7)
Project Address:	440 East Hill Road	Date Prepared: 10/20/2020

This document is used to demonstrate compliance with requirements in §110.9, §110.12(c), §130.0, §130.1, §140.6 and §141.0(b)2 for indoor lighting scopes using the prescriptive path.

A. GENERAL INFORMATION

01	Project Location (city)	Willes	04	Total Conditioned Floor Area (ft²)	2,658
02	Climate Zone	2	05	Total Unconditioned Floor Area (ft²)	0
03	Occupancy Types Within Project (select all that apply):		06	# of Stories (Habitable Above Grade)	1

☐ Office ☐ Retail ☐ Warehouse ☐ Hotel/Motel ☐ School ☒ Support Areas
☐ Parking Garage ☐ High-Rise Residential ☐ Relocatable ☐ Healthcare ☒ Other (Write in) See Table I

B. PROJECT SCOPE

This table includes any lighting systems that are within the scope of the permit application and are demonstrating compliance using the prescriptive path outlined in §140.6 or §141.0(b)2 for alterations.

Scope of Work	Conditioned Spaces		Unconditioned Spaces	
01	02	03	04	05
My Project Consists of (check all that apply):	Calculation Method	Area (ft²)	Calculation Method	Area (ft²)
☒ New Lighting System	Area Category Method	2658	Area Category Method	0
☐ New Lighting System - Parking Garage				
☐ Altered Lighting System				
Total Area of Work (ft²)	2658		0	

Registration Number: | Registration Date/Time: | Registration Provider: EnergySoft

CA Building Energy Efficiency Standards - 2019 Nonresidential Compliance | Report Version: 2019.0.001 Schema Version: rev 20190401 | Report Generated: 2020-10-20 09:11:49

STATE OF CALIFORNIA
Indoor Lighting
NRCC-LTI-E
CALIFORNIA ENERGY COMMISSION

CERTIFICATE OF COMPLIANCE		NRCC-LTI-E
Project Name:	Replacement of Existing Residential Center	Report Page: (Page 7 of 7)
Project Address:	440 East Hill Road	Date Prepared: 10/20/2020

DOCUMENTATION AUTHOR'S DECLARATION STATEMENT

Documentation Author Name: Ray Swartz	Documentation Author Signature:
Company: tk1sc	Signature Date: 2020-10-20
Address: 11870 Pierce Street, Suite 160	CEA/ HERS Certification Identification (if applicable):
City/State/Zip: Riverside CA 92505	Phone: 951-299-4160

RESPONSIBLE PERSON'S DECLARATION STATEMENT

I certify the following under penalty of perjury, under the laws of the State of California:

1. The information provided on this Certificate of Compliance is true and correct.
2. I am eligible under Division 3 of the Business and Professions Code to accept responsibility for the building design or system design identified on this Certificate of Compliance (responsible designer)
3. The energy features and performance specifications, materials, components, and manufactured devices for the building design or system design identified on this Certificate of Compliance conform to the requirements of Title 24, Part 1 and Part 6 of the California Code of Regulations.
4. The building design features or system design features identified on this Certificate of Compliance are consistent with the information provided on other applicable compliance documents, worksheets, calculations, plans and specifications submitted to the enforcement agency for approval with this building permit application.
5. I will ensure that a completed signed copy of this Certificate of Compliance shall be made available with the building permit(s) issued for the building, and made available to the enforcement agency for all applicable inspections. I understand that a completed signed copy of this Certificate of Compliance is required to be included with the documentation the builder provides to the building owner at occupancy.

Responsible Designer Name: Ray Swartz	Responsible Designer Signature:
Company: tk1sc	Date Signed: 2020-10-20
Address: 11870 Pierce Street, Suite 160	License: E15610
City/State/Zip: Riverside CA 92505	Phone: 951-299-4160

Registration Number: | Registration Date/Time: | Registration Provider: EnergySoft

CA Building Energy Efficiency Standards - 2019 Nonresidential Compliance | Report Version: 2019.0.001 Schema Version: rev 20190401 | Report Generated: 2020-10-20 09:11:49

STATE OF CALIFORNIA
Indoor Lighting
NRCC-LTI-E
CALIFORNIA ENERGY COMMISSION

CERTIFICATE OF COMPLIANCE		NRCC-LTI-E
Project Name:	Replacement of Existing Residential Center	Report Page: (Page 4 of 7)
Project Address:	440 East Hill Road	Date Prepared: 10/20/2020

I. LIGHTING POWER ALLOWANCE: COMPLETE BUILDING OR AREA CATEGORY METHODS

Each area complying using the Complete Building or Area Category Methods per §140.6(b) are included in this table. Column 06 indicates if additional lighting power allowances per §140.6(c) or adjustments per §140.6(a) are being used .

Conditioned Spaces

01	02	03	04	05	06
Area Description	Complete Building or Area Category Primary Function Area	Allowed Density (W/ft²)	Area (ft²)	Allowed Wattage (Watts)	Additional Allowance / Adjustment: Area Category	Additional Allowance / Adjustment: PAF
Restroom	Restrooms	0.65	567	368.55	No	No
Elec/Mech/Riser	Electrical Mechancial Telephone Room	0.4	91	36.4	No	No
Corridor	Corridor Area	0.6	391	234.6	No	No
Storage/Other	All Other Space Types	0.4	53	21.2	No	No
Dorms / Bedrooms	All Other Space Types	0.4	1,556	622.4	No	No
			TOTALS:	2,658	1,283.15	See Tables J, or P for detail

J. ADDITIONAL ALLOWANCE: AREA CATEGORY METHOD QUALIFYING LIGHTING SYSTEM

This section does not apply to this project.

K. TAILORED METHOD GENERAL LIGHTING POWER ALLOWANCE

This section does not apply to this project.

L. ADDITIONAL LIGHTING ALLOWANCE: TAILORED WALL DISPLAY

This section does not apply to this project.

M. ADDITIONAL LIGHTING ALLOWANCE: TAILORED FLOOR AND TASK LIGHTING

This section does not apply to this project.

N. ADDITIONAL LIGHTING ALLOWANCE: TAILORED ORNAMENTAL/SPECIAL EFFECTS

This section does not apply to this project.

Registration Number: | Registration Date/Time: | Registration Provider: EnergySoft

CA Building Energy Efficiency Standards - 2019 Nonresidential Compliance | Report Version: 2019.0.001 Schema Version: rev 20190401 | Report Generated: 2020-10-20 09:11:49

STATE OF CALIFORNIA
Indoor Lighting
NRCC-LTI-E
CALIFORNIA ENERGY COMMISSION

CERTIFICATE OF COMPLIANCE		NRCC-LTI-E
Project Name:	Replacement of Existing Residential Center	Report Page: (Page 5 of 7)
Project Address:	440 East Hill Road	Date Prepared: 10/20/2020

O. ADDITIONAL LIGHTING ALLOWANCE: TAILORED VERY VALUABLE MERCHANDISE

This section does not apply to this project.

P.POWER ADJUSTMENT: LIGHTING CONTROL CREDIT (POWER ADJUSTMENT FACTOR (PAF))

This section does not apply to this project.

Q. RATED POWER REDUCTION COMPLIANCE FOR ALTERATIONS

This section does not apply to this project.

R. 80% LIGHTING POWER FOR ALLALTERATIONS - CONTROLS EXCEPTIONS

This section does not apply to this project.

S. DAYLIGHT DESIGN POWER ADJUSTMENT FACTOR (PAF)

This section does not apply to this project.

T. DECLARATION OF REQUIRED CERTIFICATES OF INSTALLATION

Selections have been made based on information provided in this document. If any selection have been changed by permit applicant, an explanation should be included in Table E. Additional Remarks. These documents must be provided to the building inspector during construction and can be found online at https://www.energy.ca.gov/title24/2019standards/2019_compliance_documents/Nonresidential_Documents/NRC/

Yes	No	Form/Title	Field Inspector Pass	Field Inspector Fail
●	○	NRCI-LTI-01-E - Must be submitted for all buildings	☐	☐
○	●	NRCI-LTI-02-E- Must be submitted for a lighting control system, or for an Energy Management Control System (EMCS), to be recognized for compliance.	☐	☐
○	●	NRCI-LTI-04-E - Must be submitted for two interlocked systems serving an auditorium, a convention center, a conference room, a multipurpose room or a theater to be recognized for compliance.	☐	☐
○	●	NRCI-LTI-05-E- Must be submitted for a Power Adjustment Factor (PAF) to be recognized for compliance.	☐	☐
○	●	NRCI-LTI-06-E- Must be submitted for additional wattage installed in a video conferencing studio to be recognized for compliance.	☐	☐

Registration Number: | Registration Date/Time: | Registration Provider: EnergySoft

CA Building Energy Efficiency Standards - 2019 Nonresidential Compliance | Report Version: 2019.0.001 Schema Version: rev 20190401 | Report Generated: 2020-10-20 09:11:49

STATE OF CALIFORNIA
Indoor Lighting
NRCC-LTI-E
CALIFORNIA ENERGY COMMISSION

CERTIFICATE OF COMPLIANCE		NRCC-LTI-E
Project Name:	Replacement of Existing Residential Center	Report Page: (Page 2 of 7)
Project Address:	440 East Hill Road	Date Prepared: 10/20/2020

C. COMPLIANCE RESULTS

If any cell on this table says "DOES NOT COMPLY" or "COMPLIES with Exceptional Conditions" refer to Table D. for guidance.

Lighting in conditioned and unconditioned spaces must not be combined for compliance per §140.6(b)1	Allowed Lighting Power per §140.6(b) (Watts) 01 Complete Building §140.6(c)1 (See Table I)	02 Area Category §140.6(c)2 (See Table I)	03 Area Category Additional §140.6(c)2(+) (See Table J)	04 Tailored §140.6(c)3 (+) (See Table K)	=	05 Total Allowed (Watts)	≥	Adjusted Lighting Power per §140.6(a) (Watts) 06 Total Designed (Watts) (See Table F)	07 Adjustments PAF Lighting Control Credits §140.6(a)2 (-) (See Table P)	=	08 Total Adjusted (Watts) *Includes Adjustments	Compliance Results 09
												05 must be >= 08 §140.6
Conditioned	0	1,283.15	0	0	=	1283.15	≥	1,199.8	0	=	1199.8	COMPLIES
Unconditioned	0	0	0	0	=		≥	0	0	=		
											Controls Compliance (See Table H for Details)	COMPLIES
											Rated Power Reduction Compliance (See Table Q for Details)	

D. EXCEPTIONAL CONDITIONS

This table is auto-filled with uneditable comments because of selections made or data entered in tables throughout the form.

E. ADDITIONAL REMARKS

This table includes remarks made by the permit applicant to the Authority Having Jurisdiction.

F. INDOOR LIGHTING FIXTURE SCHEDULE

This table includes all permanent designed lighting and all portable lighting in offices.

Designed Wattage: Conditioned Spaces

01 Name or Item Tag	02 Complete Luminaire Description	03 Modular (Track) Fixture	04 Small Aperture & Color Change†	05 Watts per luminaire†	06 How is Wattage determined	07 Total Number of Luminaires	08 Exempt per §140.6(a)3	09 Design Watts	10 Field Inspector Pass	10 Field Inspector Fail
13	13 - 1x4 LED	No	No	32	JA8 Lamp	6	No	192	☐	☐
19	19 - Linear LED	No	No	16	JA8 Lamp	11	No	176	☐	☐

Registration Number: | Registration Date/Time: | Registration Provider: EnergySoft

CA Building Energy Efficiency Standards - 2019 Nonresidential Compliance | Report Version: 2019.0.001 Schema Version: rev 20190401 | Report Generated: 2020-10-20 09:11:49

TITLE 24 GENERAL NOTE

CONTRACTOR SHALL BE RESPONSIBLE FOR ALL WORK ASSOCIATED WITH FINAL INSPECTION AND APPLICABLE ACCEPTANCE REQUIREMENT PROCEDURES. INCLUDE ALL COSTS IN THE BASE BID. THIS SHALL INCLUDE, BUT NOT BE LIMITED TO, CONSTRUCTION INSPECTION, MEASUREMENTS, MONITORING, FUNCTIONAL TESTING, CALIBRATING, ETC. CONTRACTOR SHALL ASSUME THE ROLE OF "FIELD TECHNICIAN" AND "RESPONSIBLE PERSON" AS DEFINED IN STATE OF CALIFORNIA 2019 BUILDING ENERGY EFFICIENCY STANDARDS NONRESIDENTIAL COMPLIANCE MANUAL SECTION 13.2.2.

SEE STATE OF CALIFORNIA 2019 BUILDING ENERGY EFFICIENCY STANDARDS SECTIONS 10-103(a)3A AND 10-103(a)3B AND SECTION 130.4 FOR MORE INFORMATION.

SEE STATE OF CALIFORNIA 2019 BUILDING ENERGY EFFICIENCY STANDARDS NONRESIDENTIAL COMPLIANCE MANUAL CHAPTER 13 FOR MORE DETAILED REQUIREMENTS / INFORMATION.

SEE STATE OF CALIFORNIA 2019 BUILDING ENERGY EFFICIENCY STANDARDS RESIDENTIAL COMPLIANCE MANUAL CHAPTER 2 FOR MORE DETAILED REQUIREMENTS / INFORMATION.

PROVIDE COMPLETED INSTALLATION CERTIFICATE(S) AND CERTIFICATE(S) OF ACCEPTANCE AS REQUIRED TO THE SATISFACTION OF THE ENFORCEMENT AGENCY.

TITLE 24 PROCEDURES FOR TESTING AND ADJUSTING

CONTRACTOR SHALL BE RESPONSIBLE FOR ALL WORK ASSOCIATED WITH FINAL INSPECTION AND APPLICABLE ACCEPTANCE REQUIREMENT PROCEDURES. INCLUDE ALL COSTS IN THE BASE BID. THIS SHALL INCLUDE, BUT NOT BE LIMITED TO, CONSTRUCTION INSPECTION, MEASUREMENTS, MONITORING, FUNCTIONAL TESTING, CALIBRATING, ETC. CONTRACTOR SHALL ASSUME THE ROLE OF "FIELD TECHNICIAN" AND "RESPONSIBLE PERSON" AS DEFINED IN STATE OF CALIFORNIA 2019 BUILDING ENERGY EFFICIENCY STANDARDS NONRESIDENTIAL COMPLIANCE MANUAL SECTION 13.2.2.

LIGHTING CONTROL ACCEPTANCE TESTING AND ADJUSTING PROCEDURES – REFER TO NRCA-LTI-02-A DOCUMENTS.

AUTOMATIC DAYLIGHT CONTROL ACCEPTANCE TESTING AND ADJUSTING PROCEDURES – REFER TO NRCA-LTI-03-A DOCUMENTS.

DEMAND RESPONSE LIGHTING CONTROL ACCEPTANCE TESTING AND ADJUSTING PROCEDURES – REFER TO NRCA-LTI-04-A DOCUMENTS.

INSTITUTIONAL TUNING PAF ACCEPTANCE TESTING AND ADJUSTING PROCEDURES – REFER TO NRCA-LTI-05-A DOCUMENTS.

OUTDOOR LIGHTING CONTROL ACCEPTANCE TESTING AND ADJUSTING PROCEDURES – REFER TO NRCA-LTO-02-A DOCUMENTS.

ALL LIGHTING CONTROLS TESTING AND ADJUSTING DOCUMENTS NOTED ABOVE ARE AVAILABLE FROM THE CALIFORNIA ENERGY COMMISSION WEB SITE AT:

https://ww2.energy.ca.gov/title24/2019standards/2019_compliance_documents/Nonresidential_Documents/NRCA/

IDENTIFICATION STAMP
DIV. OF THE STATE ARCHITECT
APP: 02-118630 INC:
REVIEWED FOR
SS ☐ FLS ☐ ACS ☑
DATE: 04/13/2021

OFFICE OF THE STATE FIRE MARSHAL
APPROVED FIRE AND PANIC ONLY
Approval of this plan does not authorize or approve any omission or deviation from applicable regulations. Final approval is subject to field inspection. One set of approved plans shall be available on the project site at all times.
PERMIT NO.: 28-N-2332-CP
REVIEWED BY: LEO CATALLO, OSFM
DATE: 4/ 1 /2021

DGS GENERAL SERVICES
Department of General Services
State of California
Real Estate Services Division
Project Management & Development Branch
707 Third Street, Suite 4-105
West Sacramento, California 95605

NICHOLS MELBURG & ROSSETTO ARCHITECTS + ENGINEERS
300 Knollcrest Drive
Redding, CA. 96002
(530) 222-3300 (530) 222-3538 FAX
http://www.nmrdesign.com

Copyright © 2019
All ideas, designs, arrangements and plans indicated or represented by this drawing are owned by, and the property of, NICHOLS, MELBURG and ROSSETTO and were created, evolved and developed for use on, and in connection with, the specified project. None of such ideas, designs, arrangements or plans shall be used by, or disclosed to, any person, firm or corporation for any purpose whatsoever without the written permission of NICHOLS, MELBURG and ROSSETTO.

LICENSE STAMPS

REGISTERED PROFESSIONAL ENGINEER RAYMOND W. SWARTZ No. E15610 12/31/2021 CIVIL STATE OF CALIFORNIA
Date Signed: 3/25/2021

CONSULTANT
tklsc COLLABORATIVE
11870 Pierce Street, Suite 160
Riverside, California 92505
951.299.4160 www.tk1sc.com
Project Leader - Jerry Leonhardt
Electrical Lead - Reid Cordry
tk1sc Job #:2019-0228A

DRAWING STATUS
CONSTRUCTION DOCUMENTS

ISSUE

No.	Date	Description
1	10/20/2020	INITIAL PLAN REVIEW
2	01/22/2021	AGENCY RESUBMITTAL
3	03/22/2021	AGENCY RESUBMITTAL

If drawing is not 30" x 42" it is a reduced print

PROJECT
RESIDENTIAL CENTER, UKIAH: REPLACEMENT OF EXISTING RESIDENTIAL CENTER
440 EAST HILL ROAD
WILLITS, CALIFORNIA 95490
MENDOCINO COUNTY
CALIFORNIA CONSERVATION CORP

Supervisor	Designed	Drawn
		Author

DSA Application No.
02-118630

SHEET TITLE
TITLE 24 WOMEN'S HOUSING

DGS Project Number: 0000000000001826
NMR Project Number: 18-6456

Reference North: NORTH
Sheet Scale:
Sheet Number: E505HW

ISSUE DATE
July 9, 2021

Plot Date: 3/22/2021 9:00:07 AM
File Name: BIM 360:/CCC Willits Residential Center/E_CCC Willits_COMMON_2019-0228A.rvt

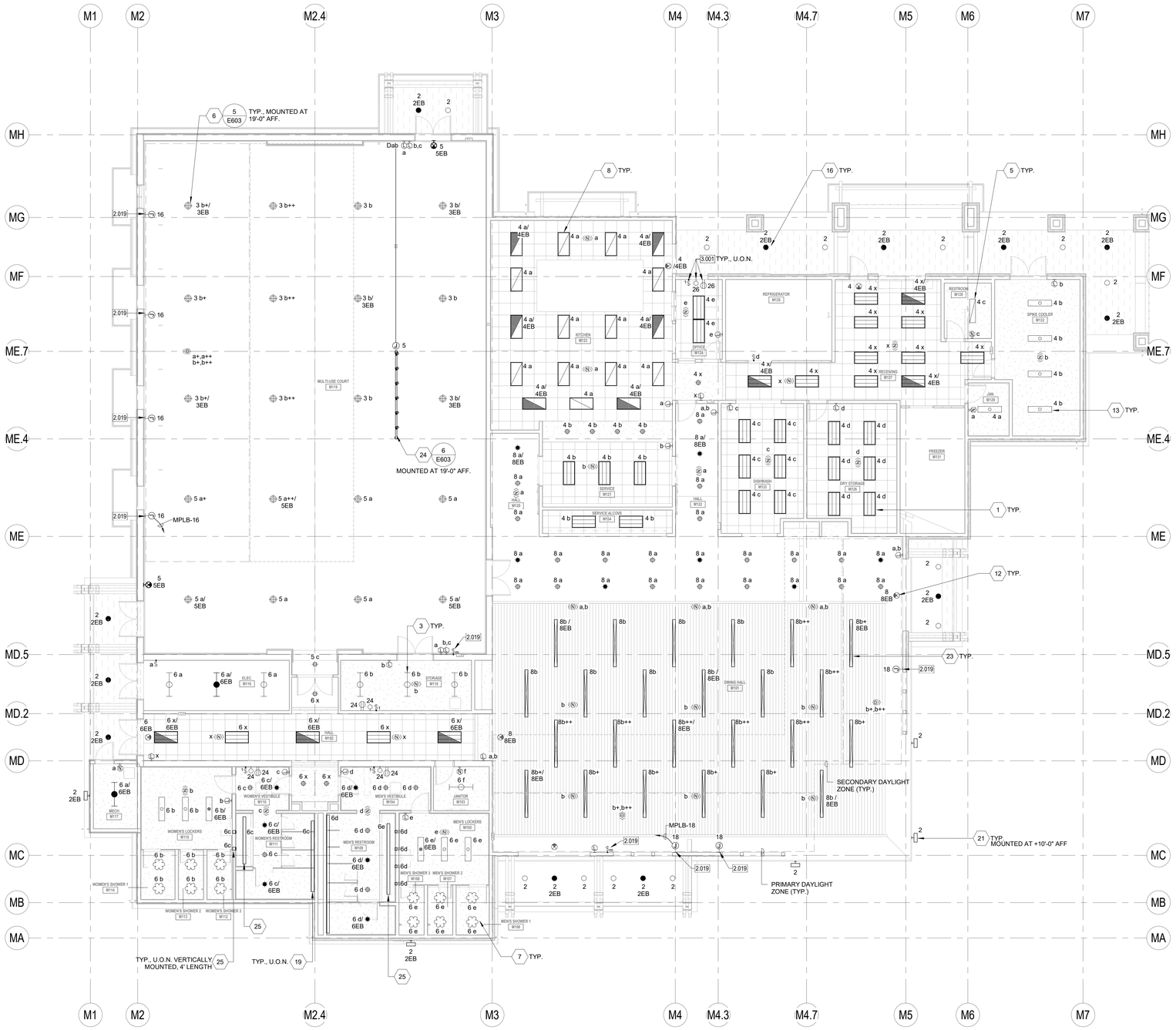

VOLTAGE DROP WORKSHEET: REFERENCE ONLY

1. ALL BRANCH CIRCUITS ARE DESIGNED TO LIMIT VOLTAGE DROP 3% OR LESS USING THE FOLLOWING CRITERIA:

208 VOLT, 1 PHASE LOAD:

LOAD (VA)	DISTANCE	CU CONDUCTOR SIZE
0-1000 VA (500 PER PHASE) 0-4.8 AMPS	0-225 FT	#12
	226-360 FT	#10
	361-572 FT	#8
1001-2000 VA (1,000 PER PHASE) 4.8-9.6 AMPS	0-151 FT	#12
	152-240 FT	#10
	241-380 FT	#8
	381-604 FT	#6
2001-3,328 VA (1,664 PER PHASE) 9.6-16 AMPS	0-78 FT	#12
	79-125 FT	#10
	126-198 FT	#8
3329-4,992 VA (2,496 PER PHASE) 16-24 AMPS	0-52 FT	#12
	53-83 FT	#10
	84-132 FT	#8

120 VOLT, 1 PHASE LOAD:

LOAD (VA)	DISTANCE	CU CONDUCTOR SIZE
0-1000 VA 0-8 AMPS	0-130 FT	#12
	131-205 FT	#10
	205-330 FT	#8
1001-1500 VA 8-12.5 AMPS	0-87 FT	#12
	88-138 FT	#10
	139-219 FT	#8
	220-350 FT	#6
1501-1920 VA 12.5-16 AMPS	0-68 FT	#12
	69-108 FT	#10
	109-172 FT	#8
	173-273 FT	#6
1921-2880 VA 16-24 AMPS	0-72 FT	#10
	73-114 FT	#8
	115-182 FT	#6

ANY 3 PHASE LOADS GREATER THAN 30 AMPS ARE SHOWN ON THE FEEDER SCHEDULE OR MOTORIZED EQUIPMENT SCHEDULE WITH ASSOCIATED VOLTAGE DROP LIMITED TO 2% OR LESS.

MULTI-PURPOSE BUIDLING LIGHTING PLAN

SCALE: 1/8" = 1'-0"

KEYNOTES

2.019 CONNECT TO MOTORIZED SHADES AS REQUIRED. PROVIDE ALL J-BOXES, LOW VOLTAGE AND LINE VOLTAGE CONTROLS, CONDUIT, CONDUCTORS, SIZED AND INSTALLED PER MOTORIZED SHADE MANUFACTURER'S REQUIREMENTS FOR A COMPLETE AND OPERABLE SYSTEM. COORDINATE INSTALLATION REQUIREMENTS WITH SHADE INSTALLER PRIOR TO ROUGH-IN.

3.001 RECEPTACLE, SWITCH, AND LIGHT FIXTURE MOUNTED ABOVE CEILING. PROVIDE A KEYLESS PLASTIC LAMP HOLDER LEVITON #R50-08829-CW4, OR EQUAL, MOUNTED ON A JUNCTION BOX WITH ONE LED A19 9W LAMP. COORDINATE AND VERIFY EXACT MOUNTING LOCATION IN FIELD WITH MECHANICAL EQUIPMENT INSTALLER PRIOR TO ROUGH IN.

LIGHTING PLAN GENERAL NOTES:

1. REFER TO ARCHITECTURAL PLANS FOR EXACT LOCATION AND ELEVATION OF ALL LIGHTING FIXTURES AND ALL DEVICES. ALL WALL-MOUNTED DEVICE HEIGHTS SHALL BE VERIFIED WITH THE ARCHITECT PRIOR TO ROUGH-IN.
2. VERIFY EXACT CEILING CONSTRUCTION WITH ARCHITECTURAL REFLECTED CEILING PLAN AND PROVIDE LIGHTING FIXTURES WITH ALL NECESSARY MOUNTING HARDWARE.
3. ALL RECESSED FIXTURES SHALL BE PROVIDED WITH ALL REQUIRED STRUCTURAL SUPPORTS AS REQUIRED BY THE CURRENTLY ADOPTED ISSUE OF THE IBC, OR CBC WHERE ADOPTED, IN ADDITION TO ANY LOCAL CODES
4. ALL COVE MOUNTED FIXTURES SHALL EXTEND THE FULL LENGTH OF THE COVE. CONTRACTOR TO FIELD MEASURE COVE LENGTH AND ORDER QUANTITY OF FIXTURES AS REQUIRED.
5. ALL DIMMING BRANCH CIRCUITS SHALL BE PROVIDED WITH A DEDICATED NEUTRAL CONDUCTOR FOR EACH ZONE/CHANNEL.
6. ALL FLUORESCENT DIMMING ZONES/CHANNELS SHALL BE PROVIDED WITH 3 LINE VOLTAGE CONDUCTORS (NEUTRAL, DIMMED HOT, SWITCHED HOT) OR 2 LINE VOLTAGE CONDUCTORS/2 CONTROL CONDUCTORS AS REQUIRED BY THE CONTROL/BALLAST TYPE.
7. ALL EMERGENCY BATTERY PACK FIXTURES SHALL BE PROVIDED WITH A CONSTANT HOT CONNECTION TO THE CHARGING LEAD. SEE GENERAL LIGHTING FIXTURE SCHEDULE NOTES FOR MORE INFORMATION.
8. REFER TO ARCHITECTURAL REFLECTED CEILING PLANS FOR EXIT SIGN CHEVRONS AND NUMBER OF FACES PER EXIT SIGN. ANY DISCREPANCIES BETWEEN EXIT SIGNS SHOWN ON THE ELECTRICAL AND ARCHITECTURAL PLANS SHALL BE BROUGHT TO THE ATTENTION OF THE ARCHITECT PRIOR TO ORDERING EXIT SIGNS.
9. WHEN EXPOSED CEILINGS OR OPEN GRID CONDITIONS OCCUR, THE CONTRACTOR WILL NEED TO PROVIDE THE FOLLOWING ITEMS:

   - ALL BRANCH CIRCUITS SHALL BE IN EMT.

   - ALL BRANCH CIRCUITS SHALL BE ROUTED, NEATLY TRAINED, AND IN PARALLEL TO STRUCTURES OR DUCT WORK. THE TERM "TRAINED" MEANS ALL PARALLEL CONDUITS SHALL MAINTAIN THE SAME SPATIAL RELATIONSHIP WITH EACH OTHER FOR ENTIRE RUN TO INCLUDE RADIUS BENDS AND SWEEPS.

   - VISUALLY OBJECTIONABLE BRANCH CIRCUITS WILL BE REROUTED AT THE REQUEST OF THE ARCHITECT AT NO ADDITIONAL COST.
10. ALL LED REMOTE INDICATORS FOR DUCT DETECTORS AND FIRE/SMOKE DAMPERS REQUIRED BY THE SFM SHALL BE LOCATED IN CEILINGS IN COORDINATION WITH ARCHITECT PRIOR TO ANY ROUGH-IN.
11. RECESSED FIXTURES LOCATED IN A FIRE-RATED CEILING OR WALL SHALL BE PROVIDED WITH A 5-SIDED RATED ENCLOSURE SO CONSTRUCTED AS TO ALLOW CODE AND MANUFACTURER-REQUIRED CLEARANCES BETWEEN THE FIXTURE AND THE ENCLOSURE.
12. PROVIDE REDUNDANT GROUND PATH IN ALL BRANCH CIRCUITS SERVING PATIENT CARE AREAS CONSISTING OF A SEPARATE, INSULATED EQUIPMENT GROUNDING CONDUCTOR PER NEC, OR CEC WHERE ADOPTED, ART 517.13.
13. PROVIDE ADDITIONAL J-BOX NEAR PANEL FOR MULTIPLE HOMERUN CIRCUITRY.
14. UNLESS SPECIFICALLY SHOWN AS (E), (R), (ER), (D), EXISTING OR NON-BOLD, ALL ELECTRICAL DEVICES SHOWN ARE NEW.
15. REFER TO GENERAL POWER PLAN NOTES AND COMMUNICATIONS PATHWAYS GENERAL NOTES FOR ADDITIONAL REQUIREMENTS WHEN POWER AND/OR DATA DEVICES ARE SHOWN ON THIS PLAN.
16. CONTRACTOR SHALL PROVIDE CONDUIT AND WIRE FOR ALL DEVICES TO PANELBOARD(S) INDICATED ON PLANS FOR A COMPLETE AND OPERABLE SYSTEM.
17. CONTRACTOR SHALL PROVIDE MINIMUM 2#12, 1#12G IN ½" CONDUIT UNLESS OTHERWISE NOTED. REFERENCE WIRE SIZE TABLE CHART ABOVE. WHERE REQUIRED, CONDUIT AND WIRE SHALL BE UPSIZED TO MEET THE REQUIREMENT OF THE DEVICE BEING SERVED BY THE BRANCH CIRCUIT. WHERE CONDUIT AND WIRING IS INDICATED AT THE HOME RUN, WIRING AND CONDUIT SHALL CONTINUE AT THAT SIZE FOR THE ENTIRE LENGTH OF THE CIRCUIT.
18. CONTRACTOR SHALL FURNISH ADDITIONAL SWITCHLEGS OR HOT WIRES AS REQUIRED TO MEET THE CONTROL INTENT OF THE DOCUMENTS AND AS REQUIRED BY CODE (I.E. EMERGENCY LIGHTING AND SWITCHED RECEPTACLES).
19. MULTIPLE CIRCUITS MAY BE USED IN A SINGLE RACEWAY. NO MORE THAN (3) DEDICATED CIRCUITS OR (4) CURRENT CARRYING CONDUCTORS SHALL BE INSTALLED IN ANY RACEWAY UNLESS OTHERWISE NOTED. WHERE A COMMON GROUNDED CONDUCTOR IS USED FOR MULTIPLE INDIVIDUAL BRANCH CIRCUITS, PER SECTIONS CEC 200.4, 250.122, 310.15(B)(2), CONDUIT SIZE SHALL BE INCREASED AS REQUIRED FOR THE CONDUCTORS INCLUDING TEMPERATURE DERATING PER CEC TABLE C1.
20. FURNISH AND INSTALL JUNCTION BOXES AS REQUIRED TO MEET MAXIMUM BEND REQUIREMENTS FOR PULLING WIRES PER CEC 358.26. JUNCTION BOXES SHALL BE SIZED AS REQUIRED PER CEC 314.28 UNLESS OTHERWISE NOTED.

WALL TYPES LEGEND

SEE SHEET G121 FOR ASSEMBLY TYPES

EXTERIOR

2 x 6 WOOD STUD WALL - NON RATED	0-W1-6	* ● #
2 x 12 WOOD STUD WALL - NON RATED	0-W1-12	* ● #

INTERIOR

2 x 4 WOOD STUD WALL - NON RATED	0-W2-4	* ● #
2 x 6 WOOD STUD WALL - NON RATED	0-W2-6	* ● #
2 x 8 WOOD STUD WALL - NON RATED	0-W2-8	* ● #
2 x 12 WOOD STUD WALL - NON RATED	0-W2-12	* ● #
2 x 4 WOOD STUD WALL - ACOUSTIC	0-W5-4	* ● #
2 x 6 WOOD STUD WALL - ACOUSTIC	0-W5-6	* ● #
2 X 4 WOOD STUD WALL - 1-HR FIRE PARTITION W/ PROTECTED OPENINGS	1-W3-4	* ● #
2 X 6 WOOD STUD WALL - 1-HR FIRE PARTITION W/ PROTECTED OPENINGS	1-W3-6	* ● #

WALL TYPE NOTES

PARTITION SYMBOL

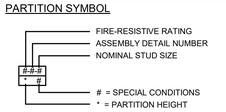

IDENTIFICATION STAMP
DIV. OF THE STATE ARCHITECT
APP: 02-118630 INC:
REVIEWED FOR
SS ☐ FLS ☐ ACS ☑
DATE: 04/13/2021

OFFICE OF THE STATE FIRE MARSHAL
APPROVED FIRE AND PANIC ONLY
Approval of this plan does not authorize or approve any omission or deviation from applicable regulations. Final approval is subject to field inspection. One set of approved plans shall be available on the project site at all times.
PERMIT NO.: 28 N 2332 CP
REVIEWED BY: LEO CATAYLO, OSFM
DATE: 4 / 1 /2021

GENERAL SERVICES
Department of General Services
State of California
Real Estate Services Division
Project Management & Development Branch
707 Third Street, Suite 4-105
West Sacramento, California 95605

NICHOLS MELBURG & ROSSETTO
ARCHITECTS + ENGINEERS
300 Knollcrest Drive
Redding, CA. 96002
(530) 222-3300 (530) 222-3538 FAX
http://www.nmrdesign.com

Copyright © 2019
All ideas, designs, arrangements and plans indicated or represented by this drawing are owned by, and the property of, NICHOLS, MELBURG and ROSSETTO and were created, evolved and developed for use on, and in connection with, the specified project. None of such ideas, designs, arrangements or plans shall be used by, or disclosed to, any person, firm or corporation for any purpose whatsoever without the written permission of NICHOLS, MELBURG and ROSSETTO.

LICENSE STAMPS

REGISTERED PROFESSIONAL ENGINEER RAYMOND W. SWIFT No. E15610 12/31/2021 ELECTRICAL STATE OF CALIFORNIA
Date Signed: 3/25/2021

CONSULTANT
tklsc COLLABORATIVE
11870 Pierce Street, Suite 160
Riverside, California 92505
951.299.4160 www.tk1sc.com
Project Leader - Jerry Leonhardt
Electrical Lead - Reid Cordry
tk1sc Job #:2019-0228A

DRAWING STATUS
CONSTRUCTION DOCUMENTS

ISSUE

No.	Date	Description
1	10/20/2020	INITIAL PLAN REVIEW
2	01/22/2021	AGENCY RESUBMITTAL
3	03/22/2021	AGENCY RESUBMITTAL

If drawing is not 30" x 42" it is a reduced print

PROJECT
RESIDENTIAL CENTER, UKIAH: REPLACEMENT OF EXISTING RESIDENTIAL CENTER
440 EAST HILL ROAD
WILLITS, CALIFORNIA 95490
MENDOCINO COUNTY
CALIFORNIA CONSERVATION CORP

Supervisor	Designed	Drawn
		Author

DSA Application No.
XX-XXXXXX

SHEET TITLE
MULTI-PURPOSE BUIDLING LIGHTING PLAN

DGS Project Number: XXXXX
NMR Project Number: 18-6456

Reference North
Sheet Scale: As indicated
Sheet Number: E101M

ISSUE DATE
July 9, 2021

Plot Date: 3/23/2021 4:13:32 PM
File Name: BIM 360://CCC Willits Residential Center/E_CCC Willits_MP_2019-0228A.rvt

Luminaire Schedule					
Symbol	Qty	Label	Arrangement	Description	BUG Rating
	10	Type1em	SINGLE	Cooper Metalux 24RLN-LD5-42-UNV-L835-CD1-U-EL14	B2-U0-G1
	10	Type16em	SINGLE	Cooper Halo Commercial PD615ED010- PDM6A835-61VC-em7wbattery	B2-U0-G0
	13	Type9em	SINGLE	Cooper Halo Commercial HC610D010-HM612835-61WDWF	B1-U0-G0
	2	Type3em	SINGLE	Cooper Metalux 4SNLED-LD5-22SL-LN-UNV-L835-CD1-U-EL7	B1-U3-G1
	8	Type6em	SINGLE	PROCTV22LEDGV-240L-35K-PR22-EMRM7W	B5-U4-G1
	5	Type23em	SINGLE	Cooper Neoray S125-DR-2-35-X-0048-1-U-DD-1-W-B2	B2-U0-G1

Calculation Summary							
Label	CalcType	Units	Avg	Max	Min	Avg/Min	Max/Min
Area 1	Illuminance	Fc	5.17	9.6	1.2	4.31	8.00
Area 2	Illuminance	Fc	4.28	8.3	1.5	2.85	5.53
Area 3	Illuminance	Fc	2.91	5.3	1.2	2.43	4.42
Exterior Walk	Illuminance	Fc	4.14	8.7	0.2	20.70	43.50
Hall M102_Floor	Illuminance	Fc	6.48	10.7	3.0	2.16	3.57
Hall M115_Floor	Illuminance	Fc	4.56	7.0	1.2	3.80	5.83
Hall M120 DiningM101_Floor	Illuminance	Fc	1.80	6.5	0.2	9.00	32.50
Kitchen M123_Floor	Illuminance	Fc	4.70	10.4	0.5	9.40	20.80
Mech M116_Floor	Illuminance	Fc	3.33	6.8	1.1	3.03	6.18
Mech M117_Floor	Illuminance	Fc	6.11	7.7	4.3	1.42	1.79
Mens M105_Floor	Illuminance	Fc	5.10	8.2	1.2	4.25	6.83
Multi Rm M119_Floor	Illuminance	Fc	1.12	2.5	0.2	5.60	12.50
Recieving M137_Floor	Illuminance	Fc	6.06	10.9	1.5	4.04	7.27
Womans M104_Floor	Illuminance	Fc	3.88	7.2	1.0	3.88	7.20
Womans M110_Floor	Illuminance	Fc	4.51	6.3	1.5	3.01	4.20

MULTI-PURPOSE BUILDING EMERGENCY LIGHTING PHOTOMETRIC PLAN

SCALE: 1/8" = 1'-0"

NORTH

IDENTIFICATION STAMP
DIV. OF THE STATE ARCHITECT
APP: 02-118630 INC:
REVIEWED FOR
SS ☐ FLS ☐ ACS ☑
DATE: 04/13/2021

OFFICE OF THE STATE FIRE MARSHAL
APPROVED FIRE AND PANIC ONLY
Approval of this plan does not authorize or approve any omission or deviation from applicable regulations. Final approval is subject to field inspection. One set of approved plans shall be available on the project site at all times.
PERMIT NO.: 20-N-2332-CP
REVIEWED BY: LEO CATAYLO, OSFM
DATE: 4/1/2021

DGS
GENERAL SERVICES
Department of General Services
State of California
Real Estate Services Division
Project Management & Development Branch
707 Third Street, Suite 4-105
West Sacramento, California 95605

NICHOLS MELBURG & ROSSETTO
ARCHITECTS + ENGINEERS
300 Knollcrest Drive
Redding, CA. 96002
(530) 222-3300 (530) 222-3538 FAX
http://www.nmrdesign.com

Copyright © 2019
All ideas, designs, arrangements and plans indicated or represented by this drawing are owned by, and the property of, NICHOLS, MELBURG and ROSSETTO and were created, evolved and developed for use on, and in conjunction with, the specified project. None of such ideas, designs, arrangements or plans shall be used by, or disclosed to any person, firm or corporation for any purpose whatsoever without the written permission of NICHOLS, MELBURG and ROSSETTO.

LICENSE STAMPS
REGISTERED PROFESSIONAL ENGINEER
RAYMOND W. SHAFFER
No. E15610
EXP. 12/31/2021
ELECTRICAL
STATE OF CALIFORNIA
Date Signed
3/25/2021

CONSULTANT
tk1sc
COLLABORATIVE
11870 Pierce Street, Suite 160
Riverside, California 92505
951.299.4160 www.tk1sc.com
Project Leader - Jerry Leonhardt
Electrical Lead - Reid Cordry
tk1sc Job #:2019-0228A

DRAWING STATUS
CONSTRUCTION DOCUMENTS

ISSUE

No.	Date	Description
1	10/20/2020	INITIAL PLAN REVIEW
2	01/22/2021	AGENCY RESUBMITTAL
3	03/22/2021	AGENCY RESUBMITTAL

If drawing is not 30" x 42" it is a reduced print

PROJECT
RESIDENTIAL CENTER, UKIAH: REPLACEMENT OF EXISTING RESIDENTIAL CENTER
440 EAST HILL ROAD
WILLITS, CALIFORNIA 95490
MENDOCINO COUNTY
CALIFORNIA CONSERVATION CORP

Supervisor	Designed	Drawn
		Author

DSA Application No.
XX-XXXXXX

SHEET TITLE
MULTI-PURPOSE BUILDING EMERGENCY LIGHTING PHOTOMETRIC PLAN

DGS Project Number: XXXXX
NMR Project Number: 18-6456

Reference North
Sheet Scale: 1/8" = 1'-0"
Sheet Number: E102M

ISSUE DATE
July 9, 2021

Plot Date: 3/22/2021 9:23:04 AM
File Name: BIM 360://CCC Willits Residential Center/E_CCC Willits_MP_2019-0228A.rvt

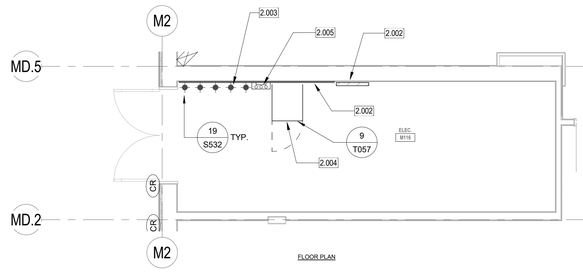

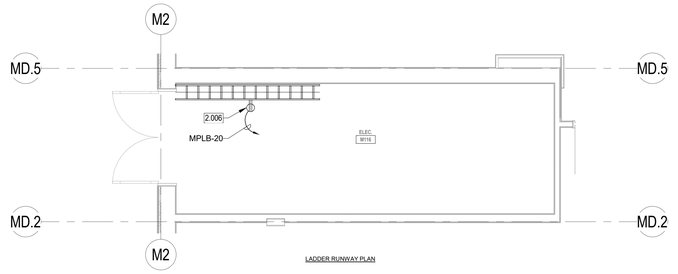

2 BLDG M - ENLARGED IDF PLANS ELEC. M116

SCALE: 1/4" = 1'-0"

3 BLDG M - ENLARGED IDF LADDER RUNWAY

SCALE: 1/4" = 1'-0"

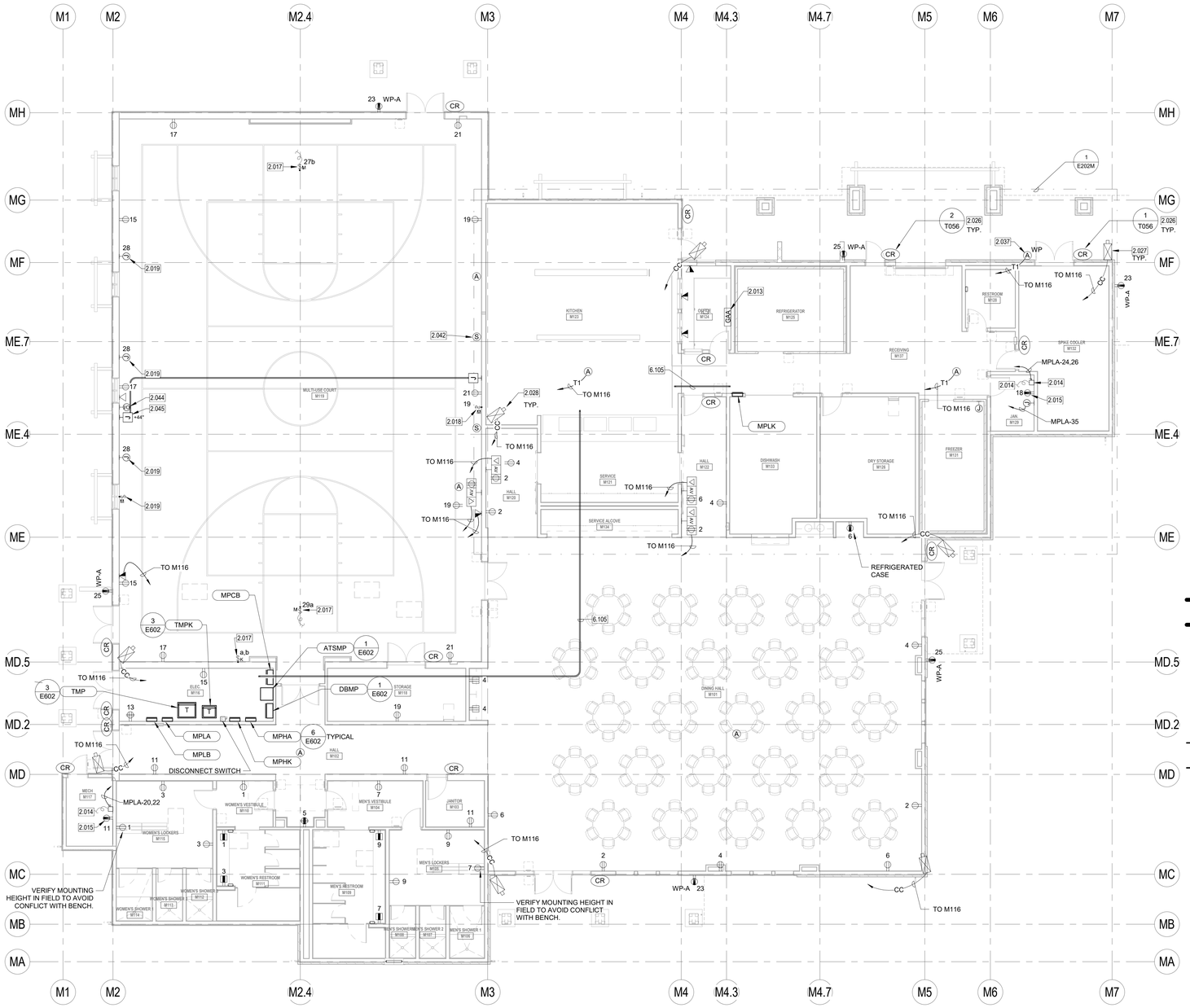

ASSISTIVE LISTENING SYSTEM NOTES:

PROVIDE PORTABLE BY LISTEN TECHNOLOGIES OR EQUIVALENT AS SPECIFIED HEREIN. SEE SPECIFICATION SECTION 275100 (PORTABLE) FOR MORE INFORMATION. THE LT-700 TRANSMITTERS AND LR-400 RECEIVERS SHALL PROVIDE AMPLIFICATION WITHIN A ROOM FOR INDIVIDUALS WITH NORMAL HEARING AND FOR THOSE WITH MINIMUM TO MILD HEARING LOSS IN 10 TO 25 dB RANGE. THE RECEIVERS SHALL BE ABLE TO AMPLIFY THE SPEAKER'S VOICE 100-120 dB ABOVE ROOM NOISE. THEY SHALL HAVE AN AUXILIARY INPUT JACK TO BROADCAST EXTERNAL SOUNDS FROM AN AUDIBLE DEVICE OR TELEVISION. THE RECEIVERS SHALL HAVE AN AUXILIARY VOLUME CONTROL TO CONTROL THE SOUND LEVEL OF INPUT RECEIVED FROM EXTERNAL SOURCES. THE UNITS SHALL HAVE AN FM VOLUME CONTROL TO ALLOW FOR ADJUSTMENT OF THE SOUND LEVEL OF THE FM SIGNAL RECEIVED FROM THE LT-700 WIRELESS TRANSMITTER. THE RECEIVER MUST HAVE A TONE CONTROL TO ADJUST THE FREQUENCY RESPONSE FOR A VARIETY OF USERS AND LISTENING ENVIRONMENTS. THEY SHALL HAVE COLOR-CODED SPEAKER OUTPUT TERMINALS AND MUST BE CAPABLE OF RECEIVING ANY OF 40FCC AND INDUSTRY CANADA APPROVED NARROW BAND CHANNEL IN THE 72 TO 76 MHz RANGE. PROVIDE TRANSMITTERS AND RECEIVERS WITH RECHARGEABLE BATTERIES. LISTENING ACCESSORIES AND CHARGING UNITS EQUAL TO 4% OF THE TOTAL SEATING OF ALL CLASSROOMS BUT NO LESS THAN A QUANTITY OF TWO PER CLASSROOM; LA-323 OR LA-325 AS REQUIRED. 25% OF ALL RECEIVERS TO BE HEARING AID COMPATIBLE. LISTENING ACCESSORIES SHALL INCLUDE STANDARD EAR SPEAKERS #LA-164; STETOCLIPS #LA-220; LAVALIER MICROPHONES #LA-261 AND CARRYING CASES #LA-323 OR LA-324 AS REQUIRED. REFER TO ARCHITECTURAL FLOOR PLANS FOR MINIMUM OCCUPANCY SEATING. NUMBER OF TRANSMITTERS SHALL ACCOMMODATE REQUIRED NUMBER OF RECEIVERS.

MULTI-PURPOSE BUIDLING POWER AND SIGNAL PLAN

SCALE: 1/8" = 1'-0"

KEYNOTES

2.002 WALL FIELD FOR CAMPUS COPPER BACKBONE CABLE

2.003 4" UNDERGROUND CONDUIT FOR CAMPUS BACKBONE CABLE

2.004 WALL MOUNT CABINET, (CPI PN#12419-736, CPI PN#40975-001, CPI PN#40973-001) ON EXISTING WALL BOARD. SCS CONTRACTOR TO VERIFY PROPER SPACE AND CLEARANCE BEFORE INSTALLATION.

2.005 ANSI-J-STD 607A COMPLIANT U.L.-LISTED TELECOMMUNICATIONS MAIN GROUND BUSBAR (TMGB) CHATSWORTH #40153-020 OR EQUAL BY HARGER, MOUNT 12"A.F.F. PROVIDE 1/8" BRASS ENGRAVED NAMEPLATE WITH ABBREVIATION "T.M.G.B." AND ATTACH TO BUS BAR. PROVIDE #6 GROUND CONDUCTOR WITH GREEN INSULATION TO EACH DATA EQUIPMENT RACK/CABINET, OVERHEAD LADDER TRAY/LADDER RACK, ETC, AS REQUIRED. CONNECTIONS SHALL BE MADE WITH 2 HOLE COMPRESSION CONNECTORS. CONNECTIONS SHALL BE BARE METAL TO BARE METAL USING APPROPRIATE ANTIOXIDANT COMPOUND. PROVIDE ALL OTHER GROUNDING REQUIREMENTS AS DETAILED IN THE PATHWAYS & GROUNDING RISER DIAGRAM SHEET T4.07. ELECTRICAL CONTRACTOR SHALL PROVIDE 1/2"C, WITH #6AWG WITH GREEN INSULATION FROM TMGB TO GROUND BUSBAR LOCATED INSIDE MPOE ROOM ELECTRICAL PANEL. ELECTRICAL CONTRACTOR SHALL PROVIDE TELECOMMUNICATIONS BONDING CONDUCTOR (TBC) CONSISTING OF (1) 1"C., W/ #1AWG (U.O.N.) WITH GREEN INSULATION CONNECTING MAIN BUILDING GROUND BUS BAR LOCATED IN MAIN ELECTRICAL ROOM TO THE TELECOMMUNICATIONS MAIN GROUNDING BUSBAR (TMGB) UTILIZING 2-HOLE COMPRESSION CONNECTORS. LABEL EACH END OF TBC WITH A GROUND WARNING TAG (PANDUIT #PT-BGRND OR EQUAL).

2.006 NEMA L6-30R 30A TWIST-LOCK MOUNTED TO LADDER RACK, PROVIDED BY E.C.

2.013 GENERATOR ANNUNCIATOR PANEL. VERIFY MOUNTING LOCATION WITH ARCHITECT PRIOR TO INSTALLATION.

2.014 CONNECT COMPLETE TO WATER HEATER AS REQUIRED. PROVIDE CODE SIZED DISCONNECT SWITCH AT THE WATER HEATER AS REQUIRED. COORDINATE LOCATION WITH PLUMBING CONTRACTOR PRIOR TO ROUGH-IN.

2.015 CONNECT CIRCULATION PUMP, TIME CLOCK AND/OR AQUASTAT AS REQUIRED. PROVIDE CODE SIZED DISCONNECT SWITCH AS REQUIRED. SEE PLUMBING PLANS FOR MORE INFORMATION. COORDINATE LOCATION WITH PLUMBING CONTRACTOR PRIOR TO ROUGH-IN.

2.017 PROVIDE CONNECTION FOR BASKETBALL HOOP RETRACTION MOTOR. VERIFY REQUIREMENTS WITH MANUFACTURER INSTALLATION MANUAL. PROVIDE KEY OPERATED SWITCH CONTROL ADJACENT TO LIGHT SWITCHES IN FLUSH, LOCKABLE ENCLOSURE.

2.018 PROVIDE CONNECTION FOR MOTORIZED PROJECTOR SCREEN.

2.019 CONNECT TO MOTORIZED SHADES AS REQUIRED. PROVIDE ALL J-BOXES, LOW VOLTAGE AND LINE VOLTAGE CONTROLS, CONDUIT, CONDUCTORS, SIZED AND INSTALLED PER MOTORIZED SHADE MANUFACTURER'S REQUIREMENTS FOR A COMPLETE AND OPERABLE SYSTEM. COORDINATE INSTALLATION REQUIREMENTS WITH SHADE INSTALLER PRIOR TO ROUGH-IN.

2.026 ACCESS CONTROL SYSTEM CARD READER WITH CONDUIT AND CABLING, PER SPECIFICATIONS. SEE SHEET T.056 FOR MORE INFORMATION.

2.027 CCTV LOCATION, EXTERIOR MOUNT IOP CAMERA. PROVIDE AND INSTALL FLUSH MOUNTED SINGLE GANG J-BOX WITH 1" WATERPROOF SLEEVE TO THE ACCESSIBLE CEILING SPACE FOR FUTURE EXTERIOR CCTV CAMERA. PROVIDE (1)CAT-6A CABLE TO EQUIPMENT PATCH PANEL IN NEAREST IDF/MDF ROOM. PROVIDE FIRE STOP PER CODE. MINIMUM 1/2" DEEP FIRE STOP PUTTY ON EACH SIDE FOR SOUND ISOLATION FOR FIRE RATED WALL PENETRATIONS. COORDINATE FINAL LOCATION WITH ARCH RCP. SEE SHEET T055 FOR MORE INFORMATION.

2.028 CCTV LOCATION. INTERIOR MOUNT IP CAMERA. PROVIDE AND INSTALL 5S DEEP BOX MOUNTED IN ACCESSIBLE CEILING ABOVE CAMERA WITH CONDUIT TO NEAREST ACCESSIBLE CEILING SPACE OR MDF/IDF. PROVIDE (1) CAT-6A CABLE TO EQUIPMENT PATCH PANEL IN NEAREST IDF/MDF ROOM. COORDINATE FINAL LOCATION WITH ARCH RCP. SEE SHEET T055 FOR MORE INFORMATION.

2.037 NEMA WIRELESS ACCESS POINT ENCLOSURE OBERON MODEL #1026-14126 OR EQUAL - FOR OWNER'S WAP ANTENNA AND ACCESS POINT EQUIPMENT. COORDINATE FINAL MOUNTING LOCATION AND HEIGHT OF NEMA BOXES WITH OWNER PRIOR TO ROUGH IN. PROVIDE CAT-6 CABLE FROM ACCESS POINT TO EQUIPMENT PATCH PANEL IN NEAREST IDF/MDF ROOM.

2.042 WALL MOUNT AV SPEAKER. SEE SINGLE LINE DIAGRAM SHEET E605 AND SPECIFICATIONS FOR MORE INFORMATION.

2.044 WALL MOUNT LINE LEVEL INPUT TO SPEAKERS. SEE SINGLE LINE DIAGRAM SHEET E605 AND SPECIFICATIONS FOR MORE INFORMATION.

2.045 FLUSH MOUNT SINGLE GANG J-BOX WITH 1" CONDUIT ACROSS BOTTOM CHORD OF HEAVY TIMBER TRUSS TO FUTURE PROJECTOR ON WEST WALL.

6.105 PROVIDE AND INSTALL (3) 2" CONDUIT SLEEVES FOR LOW VOLTAGE SYSTEMS CABLING. SLEEVES TO BE STUBBED OUT IN ACCESSIBLE CEILING SPACES MIN 6" ABOVE T-BAR AS REQUIRED. SEE DETAIL 10/601.

POWER PLAN GENERAL NOTES:

1. ALL RECEPTACLES ON COMMON WALLS SHALL BE SEPARATE BOXES AND OFFSET 24-INCHES MINIMUM.
2. ALL PENETRATIONS THROUGH FIRE RATED WALLS SHALL BE PROTECTED FROM THE SPREAD OF FIRE WITH AN APPROVED FIRESTOP SYSTEM EQUAL OR GREATER THAN THE FIRE RATING OF THE WALL.
3. ALL WALL-MOUNTED DEVICE HEIGHTS SHALL BE VERIFIED WITH THE ARCHITECT PRIOR TO ROUGH-IN.
4. ALL FURNITURE FEED LOCATIONS TO BE VERIFIED WITH ARCHITECT AND FURNITURE VENDOR PRIOR TO ROUGH-IN.
5. ALL FURNITURE WHIPS SHALL BE TRIMMED TO REDUCE EXCESS WHIP LENGTH.
6. WHEN EXPOSED CEILINGS OR OPEN GRID CONDITIONS OCCUR, THE CONTRACTOR WILL NEED TO PROVIDE THE FOLLOWING ITEMS:

   - ALL BRANCH CIRCUITS SHALL BE IN EMT.

   - ALL BRANCH CIRCUITS SHALL BE ROUTED NEATLY AND IN PARALLEL TO STRUCTURES OR DUCT WORK.

   - VISUALLY OBJECTIONABLE BRANCH CIRCUITS SHALL BE REROUTED AT THE REQUEST OF THE ARCHITECT AT NO ADDITIONAL COST.
7. EXPOSED CABLE/CONDUCTORS INSTALLED IN A PLENUM SPACE SHALL CONFORM TO NEC, OR CEC WHERE ADOPTED, ARTICLE 300.22(C).
8. PROVIDE G.F.C.I. TYPE RECEPTACLE(S) OR RECEPTACLE(S) PROTECTED BY A GFCI CIRCUIT BREAKER(S) WHEN LOCATED WITHIN 6 FEET OF ANY SINK OR THERAPEUTIC TUB, LAUNDRY AREA, SERVING ANY DRINKING FOUNTAIN OR VENDING MACHINE, WITHIN ANY KITCHEN SPACE AND/OR LOCATED OUTDOORS. WHERE RECEPTACLES ARE NOT READILY ACCESSIBLE, PROVIDE GFCI CIRCUIT BREAKER(S) TO PROTECT THE RESPECTIVE BRANCH CIRCUIT AND PROVIDE ADDITIONAL NEUTRAL CONDUCTORS IN THE BRANCH CIRCUITING AS REQUIRED TO ENSURE PROPER GFCI FUNCTION
9. PROVIDE OCCUPANCY SENSOR/LIGHTING CONTROL SYSTEM CONTROLLED RECEPTACLE RELAY(S) AS REQUIRED TO SWITCH CONTROLLED RECEPTACLES. CONNECT BRANCH CIRCUITRY AND CONTROL WIRING AS REQUIRED TO ALLOW OCCUPANCY SENSOR/LIGHTING CONTROL SYSTEM RELAY TO SWITCH STANDALONE AND/OR SYSTEMS FURNITURE CONTROLLED RECEPTACLES AS INDICATED ON PLANS. PROVIDE ADDITIONAL CONDUIT, WIRING AND PATHWAYS NECESSARY TO CONNECT BRANCH CIRCUITRY AND CONTROL WIRING TO REMOTE RELAYS TO INCLUDE RELAY(S) LOCATED ON ALTERNATE FLOORS, IN ELECTRICAL ROOMS, ETC.
10. UNLESS SPECIFICALLY SHOWN AS (E), (R), (ER), (D), EXISTING OR NON-BOLD, ALL ELECTRICAL DEVICES SHOWN ARE NEW.
11. PROVIDE REDUNDANT GROUND PATH IN ALL BRANCH CIRCUITS SERVING PATIENT CARE AREAS CONSISTING OF A SEPARATE, INSULATED EQUIPMENT GROUNDING CONDUCTOR PER NEC, OR CEC WHERE ADOPTED, ART 517.13.
12. CONTRACTOR SHALL PROVIDE CONDUIT AND WIRE FOR ALL DEVICES TO PANELBOARD(S) INDICATED ON PLANS FOR A COMPLETE AND OPERABLE SYSTEM.
13. CONTRACTOR SHALL PROVIDE MINIMUM 2#12, 1#12G IN ½" CONDUIT UNLESS OTHERWISE NOTED. REFERENCE WIRE SIZE TABLE CHART ON SHEET E101M. WHERE REQUIRED, CONDUIT AND WIRE SHALL BE UPSIZED TO MEET THE REQUIREMENT OF THE DEVICE BEING SERVED BY THE BRANCH CIRCUIT. WHERE CONDUIT AND WIRING IS INDICATED AT THE HOME RUN, WIRING AND CONDUIT SHALL CONTINUE AT THAT SIZE FOR THE ENTIRE LENGTH OF THE CIRCUIT.
14. CONTRACTOR SHALL FURNISH ADDITIONAL SWITCHLEGS OR HOT WIRES AS REQUIRED TO MEET THE CONTROL INTENT OF THE DOCUMENTS AND AS REQUIRED BY CODE (I.E. EMERGENCY LIGHTING AND SWITCHED RECEPTACLES).
15. MULTIPLE CIRCUITS MAY BE USED IN A SINGLE RACEWAY. NO MORE THAN (3) DEDICATED CIRCUITS OR (4) CURRENT CARRYING CONDUCTORS SHALL BE INSTALLED IN ANY RACEWAY UNLESS OTHERWISE NOTED. WHERE A COMMON GROUNDED CONDUCTOR IS USED FOR MULTIPLE INDIVIDUAL BRANCH CIRCUITS, PER SECTIONS CEC 200.4, 250.122, 310.15(B)(2), CONDUIT SIZE SHALL BE INCREASED AS REQUIRED FOR THE CONDUCTORS INCLUDING TEMPERATURE DERATING PER CEC TABLE C1.
16. FURNISH AND INSTALL JUNCTION BOXES AS REQUIRED TO MEET MAXIMUM BEND REQUIREMENTS FOR PULLING WIRES PER CEC 358.26. JUNCTION BOXES SHALL BE SIZED AS REQUIRED PER CEC 314.28 UNLESS OTHERWISE NOTED.

WALL TYPE NOTES

PARTITION SYMBOL

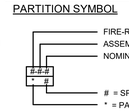

WALL TYPES LEGEND

SEE SHEET G121 FOR ASSEMBLY TYPES

EXTERIOR		
2 x 6 WOOD STUD WALL - NON RATED	0-W1-6	* #
2 x 12 WOOD STUD WALL - NON RATED	0-W1-12	* #
INTERIOR		
2 x 4 WOOD STUD WALL - NON RATED	0-W2-4	* #
2 x 6 WOOD STUD WALL - NON RATED	0-W2-6	* #
2 x 8 WOOD STUD WALL - NON RATED	0-W2-8	* #
2 x 12 WOOD STUD WALL - NON RATED	0-W2-12	* #
2 x 4 WOOD STUD WALL - ACOUSTIC	0-W5-4	* #
2 x 6 WOOD STUD WALL - ACOUSTIC	0-W5-6	* #
2 X 4 WOOD STUD WALL - 1-HR FIRE PARTITION W/ PROTECTED OPENINGS	1-W3-4	* #
2 X 6 WOOD STUD WALL - 1-HR FIRE PARTITION W/ PROTECTED OPENINGS	1-W3-6	* #

COMMUNICATIONS PATHWAYS GENERAL NOTES

1. CONDUITS SHALL, (a) CONTAIN NO CONTINUOUS SECTIONS LONGER THAN 30M (98 FT.), AND, (b) CONTAIN NO MORE THAN (2) 90° BENDS OR (1) REVERSE BEND WITHOUT INSTALLING A PULLBOX. SPLIT CONDUITS IN PLACE OF PULLBOXES ARE UNACCEPTABLE.
2. CONDUITS SHALL CONTAIN PLASTIC OR NYLON PULL TAPE RATED AT 200 LBS. WITH A MINIMUM OF 5 FEET OF EXTRA PULL TAPE COILED AT EACH END.
3. CONDUIT BEND RADIUS SHALL BE (a) A MINIMUM OF 6 TIMES THE INTERNAL CONDUIT DIAMETER FOR CONDUITS 2" IN DIAMETER OR LESS, AND, (b) 10 TIMES THE INTERNAL CONDUIT DIAMETER FOR CONDUITS MORE THAN 2" IN DIAMETER.
4. TERMINATE CONDUIT STUBS AND SLEEVES THAT PROTRUDE THROUGH STRUCTURAL FLOORS 2"-3" ABOVE THE FLOOR SURFACE.
5. INSTALL BUSHINGS OR BELL ENDS AS REQUIRED ON ALL CONDUITS.
6. FLEX CONDUIT IS UNACCEPTABLE FOR USE AS A COMMUNICATIONS CONDUIT EXCEPT AT SEISMIC JOINTS AND/OR IF APPROVED IN WRITING BY THE ENGINEER.
7. ALL UNDER SLAB OR IN-SLAB CONDUITS SHALL BE INSTALLED IN A MANNER THAT PREVENTS WATER INFILTRATION OF THE CONDUIT. IT IS THE CONTRACTOR'S RESPONSIBILITY TO ENSURE GROUND WATER, RAIN WATER OR CONSTRUCTION WATER IS PREVENTED FROM ENTERING AND/OR REMOVED FROM THE CONDUITS PRIOR TO PLACEMENT OF COMMUNICATIONS CABLES. SEE ELECTRICAL SPECIFICATIONS, DETAILS AND PLANS FOR ADDITIONAL CONDUIT SEALING REQUIREMENTS.
8. ALL PULLBOXES SHALL BE SIZED AND INSTALLED PER ANSI-TIA-569-C. PULLBOXES FOR IN/UNDER SLAB CONDUIT RUNS ARE NOT PERMITTED UNLESS OTHERWISE NOTED. PULLBOXES FOR OVERHEAD CONDUIT RUNS SHALL BE LOCATED ABOVE ACCESSIBLE CEILINGS WITHIN THE ACCESSIBLE CEILING SPACE AND SUPPORTED INDEPENDENTLY FROM THE STRUCTURE AND CONDUIT SUPPORTS. PULLBOXES FOR ROOF MOUNTED OR EXTERIOR ABOVE GRADE APPLICATIONS SHALL BE NEMA 3R RATED. PULLBOXES SHALL BE SIZED ACCORDING TO THE FOLLOWING:

CONDUIT SIZE	WIDTH	LENGTH	DEPTH	WIDTH INCREASE PER ADDITIONAL CONDUIT
1"	4"	16"	3"	2"
2"	8"	36"	4"	5"
3"	12"	48"	5"	6"
4"	15"	60"	8"	8"

FOR OTHER CONDUIT SIZES REFER TO ANSI/TIA-569-C TABLE 12. - LATEST PUBLISHED EDITION.

9. CONDUIT(S) SHALL EXIT A PULLBOX ON THE WALL OPPOSITE THE WALL ENTERED.
10. PROVIDE LABELING OF EACH CONDUIT PER GENERAL ELECTRICAL SPECIFICATIONS.
11. PROVIDE INTERNAL/EXTERNAL GAS AND WATER TIGHT MECHANICAL SEALING/PLUGGING OF EACH BUILDING ENTRY CONDUIT AS SPECIFIED ELSEWHERE IN THE DRAWINGS AND SPECIFICATIONS.

IDENTIFICATION STAMP
DIV. OF THE STATE ARCHITECT
APP: 02-118630 INC:
REVIEWED FOR
SS ☐ FLS ☐ ACS ☑
DATE: 04/13/2021

OFFICE OF THE STATE FIRE MARSHAL
APPROVED FIRE AND PANIC ONLY
Approval of this plan does not authorize or approve any omission or deviation from applicable regulations. Final approval is subject to field inspection. One set of approved plans shall be available on the project site at all times.
PERMIT NO: 26 N 2332-CP
REVIEWED BY: LEO CATAYLO, OSFM
DATE: 4 / /2021

DGS GENERAL SERVICES
Department of General Services
State of California
Real Estate Services Division
Project Management & Development Branch
707 Third Street, Suite 4-105
West Sacramento, California 95605

NICHOLS MELBURG & ROSSETTO ARCHITECTS + ENGINEERS
300 Knollcrest Drive
Redding, CA. 96002
(530) 222-3300 (530) 222-3538 FAX
http://www.nmrdesign.com

Copyright © 2019
All ideas, designs, arrangements and plans indicated or represented by this drawing are owned by, and the property of, NICHOLS, MELBURG and ROSSETTO and were created, evolved and developed for use on, and in conjunction with, the specified project. None of such ideas, designs, arrangements or plans shall be used by, or disclosed to any person, firm or corporation for any purpose whatsoever without the written permission of NICHOLS, MELBURG and ROSSETTO.

LICENSE STAMPS

REGISTERED PROFESSIONAL ENGINEER RAYMOND W. SWIFT No. E15610 12/31/2021 ELECTRICAL STATE OF CALIFORNIA
Date Signed: 3/25/2021

CONSULTANT
tk1sc COLLABORATIVE
11870 Pierce Street, Suite 160
Riverside, California 92505
951.299.4160 www.tk1sc.com
Project Leader - Jerry Leonhardt
Electrical Lead - Reid Cordry
tk1sc Job #:2019-0228A

DRAWING STATUS
CONSTRUCTION DOCUMENTS

ISSUE

No.	Date	Description
1	10/20/2020	INITIAL PLAN REVIEW
2	01/22/2021	AGENCY RESUBMITTAL
3	03/22/2021	AGENCY RESUBMITTAL

If drawing is not 30" x 42" it is a reduced print

PROJECT
RESIDENTIAL CENTER, UKIAH: REPLACEMENT OF EXISTING RESIDENTIAL CENTER
440 EAST HILL ROAD
WILLITS, CALIFORNIA 95490
MENDOCINO COUNTY
CALIFORNIA CONSERVATION CORP

Supervisor	Designed	Drawn
		Author

DSA Application No.
XX-XXXXXX

SHEET TITLE
MULTI-PURPOSE BUIDLING POWER AND SIGNAL PLAN

DGS Project Number	NMR Project Number
XXXXX	18-6456

Reference North

Sheet Scale: As indicated

Sheet Number: E201M

ISSUE DATE
July 9, 2021

Plot Date: 3/22/2021 9:23:13 AM
File Name: BIM 360://CCC Willits Residential Center/E_CCC Willits_MP_2019-0228A.rvt

ELECTRICAL ROUGH-IN

ITEM	QTY	DESCRIPTION	CONNECTED LOAD 120/1	120/208/1	120/208/3	208/1	208/3	480/3	HT	CONNECTION C&P	RECP	TYPE HW
2	1	WORK TABLE WITH SINK	4 AMP						52"		*	
5	1	ICE MAKER W/ BIN (NUGGET)				14.2 AMP			90"	*	*	
9	1	RECEIVING TABLE	4 AMP						52"		*	
14	1	WALK-IN COOLER/FREEZER	20A CKT						FA			*
16	1	WALK-IN COOLER	20A CKT						FA			*
21	2	4 HALF DR REACH IN REFRIG	5.4 AMP						92"		*	
22	1	4-HALF DR REACH IN FREEZER	9.6 AMP						92"		*	
23	1	WORK TABLE WITH SINK	4 AMP						52"		*	
25	1	WORK TABLE WITH SINK	4 AMP						52"		*	
28	1	60 QUART MIXER					5.9 AMP		32"	*	*	
32	1	WORK TABLE WITH SINKS	4 AMP						52"		*	
33	1	CE MACHINE/BIN	14.2 AMP						84"	*	*	
34	1	40 GALLON TILT KETTLE						21.7 AMP	32"			*
36	1	40 GALLON TILT SKILLET						22 AMP	32"	*	*	
38	2	2-DECK CONVECTION OVEN	12 AMP						52"	*	*	
41	1	EXHAUST HOOD (TYPE-I)										

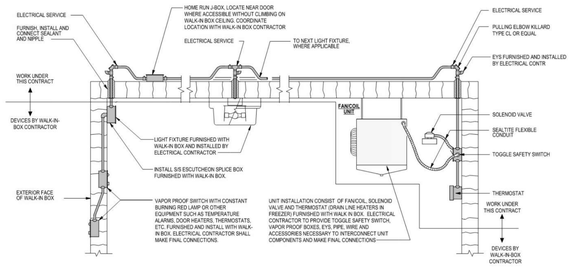

NOTE:
1. ALL CONDUIT SHALL BE RUN ON TOP OF THE WALK-IN BOX, NOT ON INTERIOR WALLS OR CEILINGS.

1 WALK-IN FREEZER / REFRIGERATOR ELECTRICAL INSTALLATION
SCALE: NONE

ELECTRICAL ROUGH-IN

ITEM	QTY	DESCRIPTION	CONNECTED LOAD 120/1	120/208/1	120/208/3	208/1	208/3	480/3	HT	CONNECTION C&P	RECP	TYPE HW
42	1	EXHAUST HOOD (TYPE-I)										
43	1	FIRE SUPPRESSION SYSTEM	20A CKT						FA			*
44	1	COOKLINE UTILITY WALL										
45	1	VFD HOOD CONTROL PANEL	20A CKT						FA			*
42	1	EXHAUST HOOD (TYPE-I)										
42	1	EXHAUST HOOD (TYPE-I)										
48	1	HOOD DISPLAY PANEL										
51	1	FRYER/FILTER						21 AMP	32"	*	*	
52	1	FRYER DUMP STATION	6.3 AMP						32"	*	*	
61	1	AUTOMATIC SLICER	5.6 AMP						52"		*	
62	1	20 QUART MIXER				5 AMP			32"	*	*	
63	1	FOOD PROCESSOR	7 AMP						48"		*	
64	1	WORK TABLE WITH SINK	4 AMP						52"		*	
65	1	ROLL-IN HEATED CABINET				15.5 AMP				*	*	
66	1	ROLL-IN REFRIGERATOR	11.4 AMP							*	*	
67	4	MOBILE WORK TABLES										
68	4	HOT / COLD WELL		12 AMP					STUB		*	
69	1	FOOD SHIELD W/ LED & HEAT	9.54 AMP						STUB			*
70	1	SERVING COUNTER	4 AMP						STUB		*	
71	1	SERVING COUNTER	4 AMP						STUB		*	
80	1	DISHMACHINE (HIGH CHAMBER)						23.2 AMP	72"			*
82	1	BOOSTER HEATER						28.5 AMP	24"			*
87	1	JUICE DISPENSER		8 AMP					46"		*	
88	1	ICED TEA BREWER	12 AMP						48"		*	
89	1	MILK DISPENSER	11 AMP						24"		*	
90	1	WATER / ICE DISPENSER	11 AMP						24"		*	
91	1	COFFEE BREWER		12 AMP					48"		*	
96	1	WATER DISPENSING SYSTEM	15 AMP						24"	*	*	
100	1	REFRIGERATION SYSTEM				30 AMP			ROOF			*

ABBREVIATIONS:

C&P	CORD AND PLUG	STUB	UTILITY UP FROM FLOOR
RECP	RECEPTACLE	DC	DROP CORD WITH RECEPTACLE
HW	HARDWIRE		
HT	HEIGHT		
FA	FROM ABOVE		

SCHEDULE / DRAWING NOTES:

CONNECTED LOAD = EACH CONNECTION SHOWN ON DRAWING

CONNECTION TYPES PROVIDED BY ELECTRICAL DIVISION

WALL TYPES LEGEND

SEE SHEET G121 FOR ASSEMBLY TYPES

EXTERIOR

- 2 x 6 WOOD STUD WALL - NON RATED — 0-W1-6 — * ● #
- 2 x 12 WOOD STUD WALL - NON RATED — 0-W1-12 — * ● #

INTERIOR

- 2 x 4 WOOD STUD WALL - NON RATED — 0-W2-4 — * ● #
- 2 x 6 WOOD STUD WALL - NON RATED — 0-W2-6 — * ● #
- 2 x 8 WOOD STUD WALL - NON RATED — 0-W2-8 — * ● #
- 2 x 12 WOOD STUD WALL - NON RATED — 0-W2-12 — * ● #
- 2 x 4 WOOD STUD WALL - ACOUSTIC — 0-W5-4 — * ● #
- 2 x 6 WOOD STUD WALL - ACOUSTIC — 0-W5-6 — * ● #
- 2 X 4 WOOD STUD WALL - 1-HR FIRE PARTITION W/ PROTECTED OPENINGS — 1-W3-4 — * ● #
- 2 X 6 WOOD STUD WALL - 1-HR FIRE PARTITION W/ PROTECTED OPENINGS — 1-W3-6 — * ● #

WALL TYPE NOTES

PARTITION SYMBOL

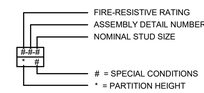

KEYNOTES

2.020 PROVIDE CONNECTION TO ROLL UP DOOR MOTOR. CONTRACTOR SHALL FURNISH AND INSTALL ALL CONTROLS FOR OPERATION AS REQUIRED BY MANUFACTURER INSTALLATION INSTRUCTIONS.

2.036 CONNECT AS REQUIRED TO CONDENSATE PIPE HEAT TAPE.

2.050 CONNECT AS REQUIRED TO DEMANDAIRE CONTROL PANEL PER MANUFACTURER'S REQUIREMENTS.

2.051 CONNECT AS REQUIRED TO ELECTRIC GAS VALVE PER MANUFACTURER'S REQUIREMENTS.

2.055 SEE DETAIL 1/E407M WIRING REQUIREMENTS FOR ALL CIRCUITING UNDER THE HOOD.

KITCHEN PLAN GENERAL NOTES:

1. INTERNAL WIRING AND PLUMBING OF FABRICATED FIXTURES SHALL BE THE RESPONSIBILITY OF THE FIXTURE MANUFACTURER, UNLESS OTHERWISE NOTED. FINAL HOOKUP OF EQUIPMENT AND FIXTURES SHALL BE BY THE ELECTRICAL AND/OR PLUMBING CONTRACTORS.
2. CONTRACTOR SHALL VERIFY ALL DIMENSIONS AT THE JOB SITE BEFORE STARTING FABRICATION OF CUSTOM FABRICATED FIXTURES.
3. CONVENIENCE OUTLETS SHALL BE SET HORIZONTALLY.
4. WHERE STUBBING UP OUT OF A FLOOR, CONDUIT SHALL EXTEND A MINIMUM OF 4" ABOVE THE FINISHED FLOOR OR CURB.
5. CONTRACTOR SHALL SUPPLY AND INSTALL STAINLESS STEEL COVER PLATES ON PARTIALLY OR WHOLLY EXPOSED PULL BOXES AND ACCESS BOXES.
6. CONTRACTOR SHALL SUPPLY AND INSTALL LOCKOUT DEVICES ON BREAKERS FOR CLOCKS, MECHANICAL REFRIGERATION SYSTEMS, CONTROL WIRING AND EXHAUST HOOD FIRE PROTECTION SYSTEM CONTROLS.
7. CONTRACTOR SHALL SUPPLY AND INSTALL SWITCHES FOR HEAT LAMPS, EXHAUST HOOD LIGHTS AND MAKE-UP AIR SYSTEMS. VERIFY LOCATIONS WITH ARCHITECT.
8. WHEN ELECTRIC SOLENOID GAS SHUTOFF VALVES ARE SPECIFIED FOR THE EXHAUST HOOD FIRE PROTECTION SYSTEM, THE EXHAUST HOOD FIRE PROTECTION SYSTEM CONTRACTOR SHALL FURNISH AND ELECTRICAL SHALL INSTALL THE DEVICES. REFER TO ARCHITECTURAL KITCHEN DRAWING, SHEET A220M AND FOOD SERVICE PLAN FS114..
9. CONTRACTOR SHALL PROVIDE POWER FOR AND CONNECT REFRIGERATION COMPRESSORS AND BLOWER COILS, AND AUTOMATIC DEFROST SYSTEMS SHOWN ON THE REFRIGERATION SCHEDULE. FURNISH AND INSTALL MAGNETIC STARTERS AND THERMO-OVERLOAD PROTECTION DEVICES AS REQUIRED.
10. CONTRACTOR SHALL PACK SEAL AND ALL EXPOSED J-BOXES AND CONDUIT ON WALK-IN COOLERS AND FREEZERS TO PREVENT INTERNAL CONDENSATION.
11. CONTRACTOR SHALL PROVIDE POWER TO AND CONNECT KITCHEN EXHAUST AND MAKE-UP AIR BLOWER MOTORS, WHETHER PROVIDED BY FOOD SERVICE EQUIPMENT AND FIXTURE CONTRACTOR OR HVAC SECTION.
12. CONTRACTOR SHALL PROVIDE CONDUITS AND PULL BOXES FOR REFRIGERATION, BEVERAGE AND SODA LINES.
13. BEFORE INSTALLING J-BOXES OR OTHER FITTINGS ON WALK-IN REFRIGERATOR WALLS OR CEILINGS, VERIFY EXISTENCE OF ADEQUATE SUPPORT AND INSULATION WITH REFRIGERATOR MANUFACTURER. ALL CONDUIT MOUNTED ON INTERIOR OF WALK-INS SHALL BE SPACED 1" OFF WALL.
14. VERIFY MOUNTING HEIGHTS WITH ARCHITECT PRIOR TO ROUGH-IN.
15. REFER TO FOOD SERVICE DRAWINGS, FS-114 FOR ADDITIONAL REQUIREMENTS.
16. EQUIPMENT IN THE KITCHEL SHALL NOT SHARE NEUTRAL WIRES. PROVIDE SEPARATE NEUTRAL AS REQUIRED FOR EACH DECICATION PIECE OF EQUIPMENT.

ALL RECEPTACLES WITHIN KITCHEN OR SERVING AREA SHALL BE GFI-TYPE.

POWER PLAN GENERAL NOTES:

1. ALL RECEPTACLES ON COMMON WALLS SHALL BE SEPARATE BOXES AND OFFSET 24-INCHES MINIMUM.
2. ALL PENETRATIONS THROUGH FIRE RATED WALLS SHALL BE PROTECTED FROM THE SPREAD OF FIRE WITH AN APPROVED FIRESTOP SYSTEM EQUAL OR GREATER THAN THE FIRE RATING OF THE WALL.
3. ALL WALL-MOUNTED DEVICE HEIGHTS SHALL BE VERIFIED WITH THE ARCHITECT PRIOR TO ROUGH-IN.
4. ALL FURNITURE FEED LOCATIONS TO BE VERIFIED WITH ARCHITECT AND FURNITURE VENDOR PRIOR TO ROUGH-IN.
5. ALL FURNITURE WHIPS SHALL BE TRIMMED TO REDUCE EXCESS WHIP LENGTH.
6. WHEN EXPOSED CEILINGS OR OPEN GRID CONDITIONS OCCUR, THE CONTRACTOR WILL NEED TO PROVIDE THE FOLLOWING ITEMS:
   - ALL BRANCH CIRCUITS SHALL BE IN EMT.
   - ALL BRANCH CIRCUITS SHALL BE ROUTED NEATLY AND IN PARALLEL TO STRUCTURES OR DUCT WORK.
   - VISUALLY OBJECTIONABLE BRANCH CIRCUITS SHALL BE REROUTED AT THE REQUEST OF THE ARCHITECT AT NO ADDITIONAL COST.
7. EXPOSED CABLE/CONDUCTORS INSTALLED IN A PLENUM SPACE SHALL CONFORM TO NEC, OR CEC WHERE ADOPTED, ARTICLE 300.22(C).
8. PROVIDE G.F.C.I. TYPE RECEPTACLE(S) OR RECEPTACLE(S) PROTECTED BY A GFCI CIRCUIT BREAKER(S) WHEN LOCATED WITHIN 6 FEET OF ANY SINK OR THERAPEUTIC TUB, LAUNDRY AREA, SERVING ANY DRINKING FOUNTAIN OR VENDING MACHINE, WITHIN ANY KITCHEN SPACE AND/OR LOCATED OUTDOORS. WHERE RECEPTACLES ARE NOT READILY ACCESSIBLE, PROVIDE GFCI CIRCUIT BREAKER(S) TO PROTECT THE RESPECTIVE BRANCH CIRCUIT AND PROVIDE ADDITIONAL NEUTRAL CONDUCTORS IN THE BRANCH CIRCUITING AS REQUIRED TO ENSURE PROPER GFCI FUNCTION
9. PROVIDE OCCUPANCY SENSOR/LIGHTING CONTROL SYSTEM CONTROLLED RECEPTACLE RELAY(S) AS REQUIRED TO SWITCH CONTROLLED RECEPTACLES. CONNECT BRANCH CIRCUITRY AND CONTROL WIRING AS REQUIRED TO ALLOW OCCUPANCY SENSOR/LIGHTING CONTROL SYSTEM RELAY TO SWITCH STANDALONE AND/OR SYSTEMS FURNITURE CONTROLLED RECEPTACLES AS INDICATED ON PLANS. PROVIDE ADDITIONAL CONDUIT, WIRING AND PATHWAYS NECESSARY TO CONNECT BRANCH CIRCUITRY AND CONTROL WIRING TO REMOTE RELAYS TO INCLUDE RELAY(S) LOCATED ON ALTERNATE FLOORS, IN ELECTRICAL ROOMS, ETC.
10. UNLESS SPECIFICALLY SHOWN AS (E), (R), (ER), (D), EXISTING OR NON-BOLD, ALL ELECTRICAL DEVICES SHOWN ARE NEW.
11. PROVIDE REDUNDANT GROUND PATH IN ALL BRANCH CIRCUITS SERVING PATIENT CARE AREAS CONSISTING OF A SEPARATE, INSULATED EQUIPMENT GROUNDING CONDUCTOR PER NEC, OR CEC WHERE ADOPTED, ART 517.13.
12. CONTRACTOR SHALL PROVIDE CONDUIT AND WIRE FOR ALL DEVICES TO PANELBOARD(S) INDICATED ON PLANS FOR A COMPLETE AND OPERABLE SYSTEM.
13. CONTRACTOR SHALL PROVIDE MINIMUM 2#12, 1#12G IN ½" CONDUIT UNLESS OTHERWISE NOTED. REFERENCE WIRE SIZE TABLE CHART ON SHEET E101M. WHERE REQUIRED, CONDUIT AND WIRE SHALL BE UPSIZED TO MEET THE REQUIREMENT OF THE DEVICE BEING SERVED BY THE BRANCH CIRCUIT. WHERE CONDUIT AND WIRING IS INDICATED AT THE HOME RUN, WIRING AND CONDUIT SHALL CONTINUE AT THAT SIZE FOR THE ENTIRE LENGTH OF THE CIRCUIT.
14. CONTRACTOR SHALL FURNISH ADDITIONAL SWITCHLEGS OR HOT WIRES AS REQUIRED TO MEET THE CONTROL INTENT OF THE DOCUMENTS AND AS REQUIRED BY CODE (I.E. EMERGENCY LIGHTING AND SWITCHED RECEPTACLES).
15. MULTIPLE CIRCUITS MAY BE USED IN A SINGLE RACEWAY NO MORE THAN (3) DEDICATED CIRCUITS OR (4) CURRENT CARRYING CONDUCTORS SHALL BE INSTALLED IN ANY RACEWAY UNLESS OTHERWISE NOTED. WHERE A COMMON GROUNDED CONDUCTOR IS USED FOR MULTIPLE INDIVIDUAL BRANCH CIRCUITS, PER SECTIONS CEC 200.4, 250.122, 310.15(B)(2), CONDUIT SIZE SHALL BE INCREASED AS REQUIRED FOR THE CONDUCTORS INCLUDING TEMPERATURE DERATING PER CEC TABLE C1.
16. FURNISH AND INSTALL JUNCTION BOXES AS REQUIRED TO MEET MAXIMUM BEND REQUIREMENTS FOR PULLING WIRES PER CEC 358.26. JUNCTION BOXES SHALL BE SIZED AS REQUIRED PER CEC 314.28 UNLESS OTHERWISE NOTED.

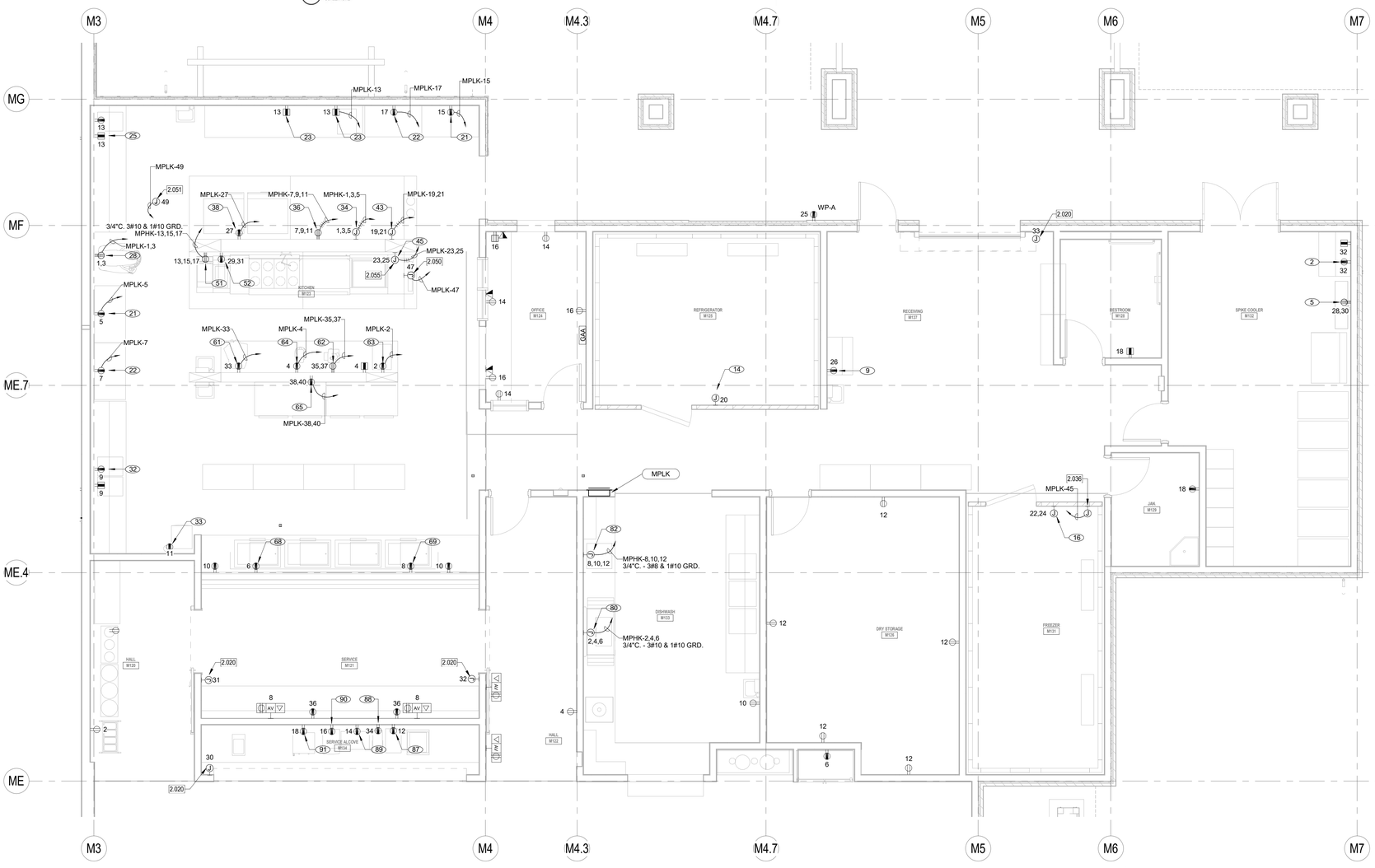

MULTI-PURPOSE BUIDLING ENLARGED KITCHEN PLAN

SCALE: 1/4" = 1'-0"

IDENTIFICATION STAMP
DIV. OF THE STATE ARCHITECT
APP: 02-118630 INC:
REVIEWED FOR
SS ☐ FLS ☐ ACS ☑
DATE: 04/13/2021

OFFICE OF THE STATE FIRE MARSHAL
APPROVED FIRE AND PANIC ONLY
Approval of this plan does not authorize or approve any omission or deviation from applicable regulations. Final approval is subject to field inspection. One set of approved plans shall be available on the project site at all times.
PERMIT NO.: 28-N-3332-CP
REVIEWED BY: LEO CATALLO, OSFM
DATE: 4 / 1 /2021

GENERAL SERVICES
Department of General Services
State of California
Real Estate Services Division
Project Management & Development Branch
707 Third Street, Suite 4-105
West Sacramento, California 95605

NICHOLS MELBURG & ROSSETTO
ARCHITECTS + ENGINEERS
300 Knollcrest Drive
Redding, CA. 96002
(530) 222-3300 (530) 222-3538 FAX
http://www.nmrdesign.com

Copyright © 2019
All ideas, designs, arrangements and plans indicated or represented by this drawing are owned by, and the property of, NICHOLS, MELBURG and ROSSETTO and were created, evolved and developed for use on, and in conjunction with, the specified project. None of such ideas, designs, arrangements or plans shall be used by, or disclosed to any person, firm or corporation for any purpose whatsoever without the written permission of NICHOLS, MELBURG and ROSSETTO.

LICENSE STAMPS

REGISTERED PROFESSIONAL ENGINEER RAYMOND W. SWOPE No. E15610 12/31/2021 MECHANICAL ENGINEER STATE OF CALIFORNIA
Date Signed: 3/25/2021

CONSULTANT
tk1sc COLLABORATIVE
11870 Pierce Street, Suite 160
Riverside, California 92505
951.299.4160 www.tk1sc.com
Project Leader - Jerry Leonhardt
Electrical Lead - Reid Cordry
tk1sc Job #:2019-0228A

DRAWING STATUS
CONSTRUCTION DOCUMENTS

ISSUE

No.	Date	Description
1	10/20/2020	INITIAL PLAN REVIEW
2	01/22/2021	AGENCY RESUBMITTAL
3	03/22/2021	AGENCY RESUBMITTAL

If drawing is not 30" x 42" it is a reduced print

PROJECT
RESIDENTIAL CENTER, UKIAH: REPLACEMENT OF EXISTING RESIDENTIAL CENTER
440 EAST HILL ROAD
WILLITS, CALIFORNIA 95490
MENDOCINO COUNTY
CALIFORNIA CONSERVATION CORP

Supervisor	Designed	Drawn
		Author

DSA Application No.
XX-XXXXXX

SHEET TITLE
MULTI-PURPOSE BUIDLING ENLARGED KITCHEN PLAN

DGS Project Number	NMR Project Number
XXXXX	18-6456

Reference North

Sheet Scale: As indicated

Sheet Number: E202M

ISSUE DATE
July 9, 2021

Plot Date: 3/23/2021 4:34:54 PM
File Name: BIM 360://CCC Willits Residential Center/E_CCC Willits_MP_2019-0228A.rvt

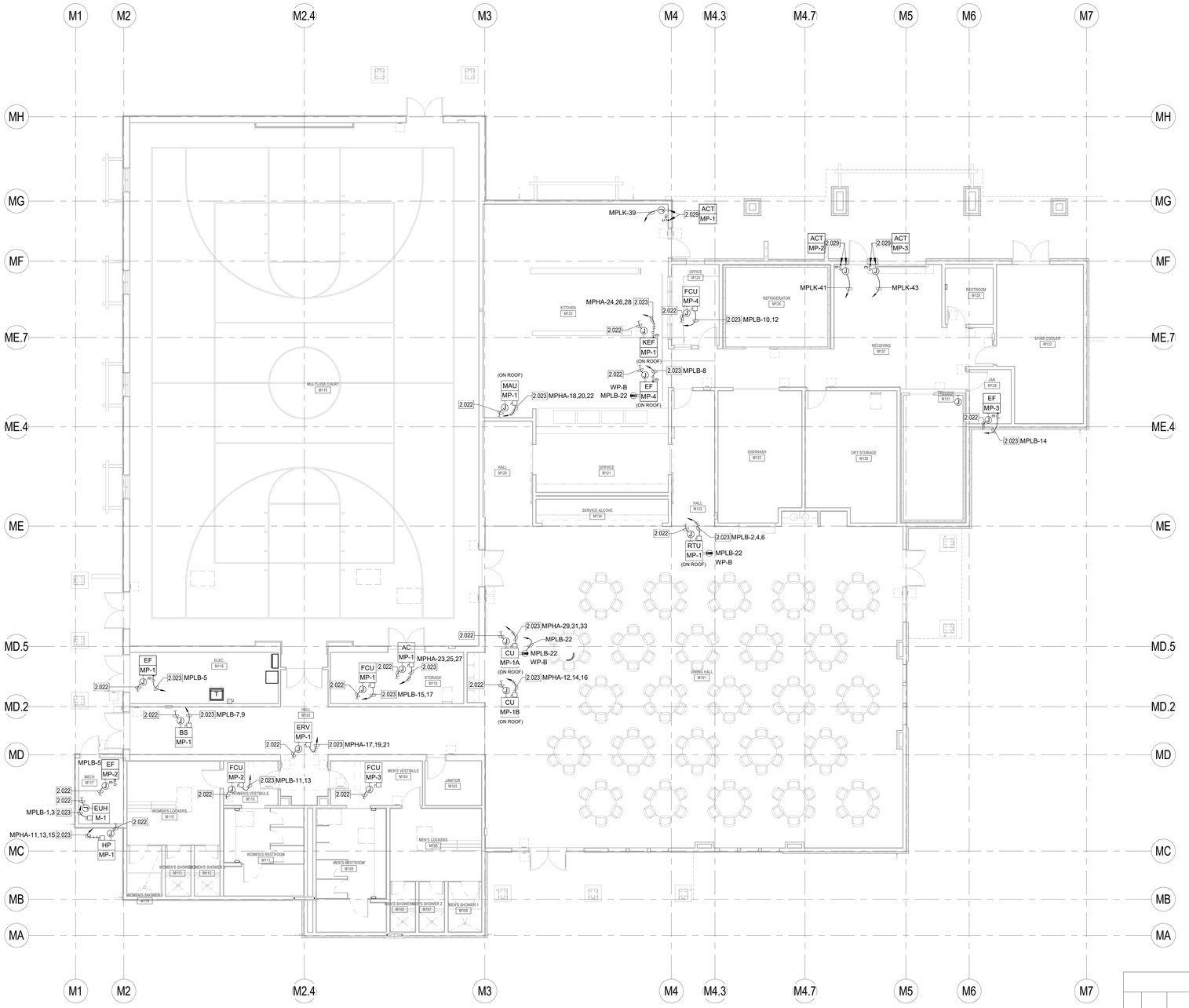

MULTI-PURPOSE BUIDLING MECHANICAL POWER PLAN

SCALE: 1/8" = 1'-0"

POWER PLAN GENERAL NOTES:

1. ALL RECEPTACLES ON COMMON WALLS SHALL BE SEPARATE BOXES AND OFFSET 24-INCHES MINIMUM.
2. ALL PENETRATIONS THROUGH FIRE RATED WALLS SHALL BE PROTECTED FROM THE SPREAD OF FIRE WITH AN APPROVED FIRESTOP SYSTEM EQUAL OR GREATER THAN THE FIRE RATING OF THE WALL.
3. ALL WALL-MOUNTED DEVICE HEIGHTS SHALL BE VERIFIED WITH THE ARCHITECT PRIOR TO ROUGH-IN.
4. ALL FURNITURE FEED LOCATIONS TO BE VERIFIED WITH ARCHITECT AND FURNITURE VENDOR PRIOR TO ROUGH-IN.
5. ALL FURNITURE WHIPS SHALL BE TRIMMED TO REDUCE EXCESS WHIP LENGTH.
6. WHEN EXPOSED CEILINGS OR OPEN GRID CONDITIONS OCCUR, THE CONTRACTOR WILL NEED TO PROVIDE THE FOLLOWING ITEMS:

   - ALL BRANCH CIRCUITS SHALL BE IN EMT.

   - ALL BRANCH CIRCUITS SHALL BE ROUTED NEATLY AND IN PARALLEL TO STRUCTURES OR DUCT WORK.

   - VISUALLY OBJECTIONABLE BRANCH CIRCUITS SHALL BE REROUTED AT THE REQUEST OF THE ARCHITECT AT NO ADDITIONAL COST.
7. EXPOSED CABLE/CONDUCTORS INSTALLED IN A PLENUM SPACE SHALL CONFORM TO NEC, OR CEC WHERE ADOPTED, ARTICLE 300.22(C).
8. PROVIDE G.F.C.I. TYPE RECEPTACLE(S) OR RECEPTACLE(S) PROTECTED BY A GFCI CIRCUIT BREAKER(S) WHEN LOCATED WITHIN 6 FEET OF ANY SINK OR THERAPEUTIC TUB, LAUNDRY AREA, SERVING ANY DRINKING FOUNTAIN OR VENDING MACHINE, WITHIN ANY KITCHEN SPACE AND/OR LOCATED OUTDOORS. WHERE RECEPTACLES ARE NOT READILY ACCESSIBLE, PROVIDE GFCI CIRCUIT BREAKER(S) TO PROTECT THE RESPECTIVE BRANCH CIRCUIT AND PROVIDE ADDITIONAL NEUTRAL CONDUCTORS IN THE BRANCH CIRCUITING AS REQUIRED TO ENSURE PROPER GFCI FUNCTION
9. PROVIDE OCCUPANCY SENSOR/LIGHTING CONTROL SYSTEM CONTROLLED RECEPTACLE RELAY(S) AS REQUIRED TO SWITCH CONTROLLED RECEPTACLES. CONNECT BRANCH CIRCUITRY AND CONTROL WIRING AS REQUIRED TO ALLOW OCCUPANCY SENSOR/LIGHTING CONTROL SYSTEM RELAY TO SWITCH STANDALONE AND/OR SYSTEMS FURNITURE CONTROLLED RECEPTACLES AS INDICATED ON PLANS. PROVIDE ADDITIONAL CONDUIT, WIRING AND PATHWAYS NECESSARY TO CONNECT BRANCH CIRCUITRY AND CONTROL WIRING TO REMOTE RELAYS TO INCLUDE RELAY(S) LOCATED ON ALTERNATE FLOORS, IN ELECTRICAL ROOMS, ETC.
10. UNLESS SPECIFICALLY SHOWN AS (E), (R), (ER), (D), EXISTING OR NON-BOLD, ALL ELECTRICAL DEVICES SHOWN ARE NEW.
11. PROVIDE REDUNDANT GROUND PATH IN ALL BRANCH CIRCUITS SERVING PATIENT CARE AREAS CONSISTING OF A SEPARATE, INSULATED EQUIPMENT GROUNDING CONDUCTOR PER NEC, OR CEC WHERE ADOPTED, ART 517.13.
12. CONTRACTOR SHALL PROVIDE CONDUIT AND WIRE FOR ALL DEVICES TO PANELBOARD(S) INDICATED ON PLANS FOR A COMPLETE AND OPERABLE SYSTEM.
13. CONTRACTOR SHALL PROVIDE MINIMUM 2#12, 1#12G IN ½" CONDUIT UNLESS OTHERWISE NOTED. REFERENCE WIRE SIZE TABLE CHART ON SHEET E101M. WHERE REQUIRED, CONDUIT AND WIRE SHALL BE UPSIZED TO MEET THE REQUIREMENT OF THE DEVICE BEING SERVED BY THE BRANCH CIRCUIT. WHERE CONDUIT AND WIRING IS INDICATED AT THE HOME RUN, WIRING AND CONDUIT SHALL CONTINUE AT THAT SIZE FOR THE ENTIRE LENGTH OF THE CIRCUIT.
14. CONTRACTOR SHALL FURNISH ADDITIONAL SWITCHLEGS OR HOT WIRES AS REQUIRED TO MEET THE CONTROL INTENT OF THE DOCUMENTS AND AS REQUIRED BY CODE (I.E. EMERGENCY LIGHTING AND SWITCHED RECEPTACLES).
15. MULTIPLE CIRCUITS MAY BE USED IN A SINGLE RACEWAY. NO MORE THAN (3) DEDICATED CIRCUITS OR (4) CURRENT CARRYING CONDUCTORS SHALL BE INSTALLED IN ANY RACEWAY UNLESS OTHERWISE NOTED. WHERE A COMMON GROUNDED CONDUCTOR IS USED FOR MULTIPLE INDIVIDUAL BRANCH CIRCUITS, PER SECTIONS CEC 200.4, 250.122, 310.15(B)(2), CONDUIT SIZE SHALL BE INCREASED AS REQUIRED FOR THE CONDUCTORS INCLUDING TEMPERATURE DERATING PER CEC TABLE C1.
16. FURNISH AND INSTALL JUNCTION BOXES AS REQUIRED TO MEET MAXIMUM BEND REQUIREMENTS FOR PULLING WIRES PER CEC 358.26. JUNCTION BOXES SHALL BE SIZED AS REQUIRED PER CEC 314.28 UNLESS OTHERWISE NOTED.

MOTORIZED EQUIPMENT SCHEDULE GENERAL NOTES:

1. ALL BRANCH CIRCUIT DATA IS BASED UPON METALLIC CONDUITS. IF THE CONTRACTOR ELECTS TO USE NONMETALLIC CONDUITS, AN EQUIPMENT GROUNDING CONDUCTOR SHALL BE INSTALLED PER NEC, OR CEC WHERE ADOPTED, TABLE 250.122 AND THE CONDUIT SIZE SHALL BE INCREASED ACCORDINGLY.
2. ELECTRICAL CONTRACTOR SHALL REFER TO ALL DOCUMENTS RELATED TO THE EQUIPMENT (I.E. SHOP DRAWINGS, CONSTRUCTION DOCUMENTS, ETC.) IN REGARDS TO ELECTRICAL CHARACTERISTICS OF ALL EQUIPMENT LISTED IN THE SCHEDULE. ANY MODIFICATION AND/OR ADDITIONAL WORK NECESSARY SHALL BE INCLUDED IN THE BASE BID.
3. ELECTRICAL CONTRACTOR SHALL CHECK THE ROTATION OF ALL THREE PHASE MOTORS AND CORRECT THE ROTATION IF REVERSED.
4. ELECTRICAL CONTRACTOR SHALL PROVIDE FUSES SIZED PER THE EQUIPMENT NAMEPLATE INFORMATION.
5. DISCONNECT SWITCHES SHALL BE HEAVY DUTY TYPE, EXTERNALLY OPERATED, QUICK MAKE QUICK BREAK AND SHALL BE FUSIBLE OR NON FUSIBLE AS INDICATED. A MAXIMUM VOLTAGE, CURRENT AND HORSEPOWER SHALL BE CLEARLY MARKED ON SWITCH ENCLOSURE. SWITCHES HAVING DUAL RATINGS (HIGHER RATINGS WHEN USED WITH DUAL ELEMENT FUSES) SHALL HAVE RATINGS INDICATED ON METAL PLATES RIVETED OR OTHERWISE PERMANENTLY ATTACHED TO THE ENCLOSURE. WHEN INDICATED, TOGGLE SWITCHES SHALL BE MOTOR RATED FOR THE APPLICATION.
6. STARTERS SHALL BE FULL VOLTAGE, REDUCED VOLTAGE OR COMBINATION DISCONNECT AND STARTER, WITH CONTROL VOLTAGE AS REQUIRED, AS INDICATED ON THE DOCUMENTS RELATED TO THE EQUIPMENT, SUCH AS SHOP DRAWINGS, CONSTRUCTION DOCUMENTS, ETC. STARTERS SHALL INCLUDE MOTOR OVERLOAD PROTECTION, PHASE LOSS AND PHASE UNBALANCE PROTECTION AS REQUIRED.
7. ALL TERMINATIONS AND ENCLOSURES SHALL BE RATED FOR USE WITH 75 DEGREE C CONDUCTORS.
8. COMPLETE INSTALLATION SHALL CONFORM TO THE REQUIREMENTS OF NEC (OR CEC WHERE ADOPTED) ARTICLES 430 AND 440.
9. CONTRACTOR TO COORDINATE WITH ALL OTHER PROJECT TRADES AND WITH OWNER/ TENANT FOR TO OBTAIN RESPECTIVE EQUIPMENT SCCR AND PROVIDE APPROPRIATE PROTECTIVE DEVICES TO LIMIT AVAILABLE FAULT CURRENT TO LESS THAN THE EQUIPMENT NAMEPLATE SCCR PER NEC (OR CEC WHERE ADOPTED) 110.10. SEE POWER SYSTEM STUDY SPECIFICATIONS FOR ADDITIONAL REQUIREMENTS.
10. UNLESS OTHERWISE NOTED, MOCP VALUES FOR VFD-EQUIPPED DEVICE ARE SIZED PER NEC (OR CEC WHERE ADOPTED) 430.130(A).1. CONTRACTOR SHALL COORDINATE WITH ALL OTHER PROJECT TRADES AND WITH OWNER/ TENANT (IF PROVIDING EQUIPMENT ON PROJECT) TO OBTAIN NAMEPLATE VFD-EQUIPPED DEVICE MOCP VALUE FROM MANUFACTURER INSTALLATION INSTRUCTIONS AND PROVIDE APPROPRIATE PROTECTIVE DEVICES TO COMPLY WITH NEC (OR CEC WHERE ADOPTED) 430.130(A).2.

MOTORIZED EQUIPMENT SCHEDULE SPECIFIC NOTES:

A. FUSED AS RECOMMENDED BY MANUFACTURER.

B. MAGNETIC MOTOR STARTER WITH CONTROL TRANSFORMER, AUXILIARY CONTACTS, INDICATOR LIGHT AND H.O.A. SWITCH. VERIFY CONTROL TRANSFORMER VOLTAGE WITH M.C. PRIOR TO ORDERING MATERIAL.

C. ROUTE THROUGH LINE VOLTAGE CONTROL. SEE MECHANICAL AND/OR PLUMBING PLANS FOR ADDITIONAL REQUIREMENTS.

D. VERIFY LOCATION WITH PLUMBING PLANS PRIOR TO ROUGH-IN. CONNECT TO AQUASTAT AND TIME CLOCK AS REQUIRED.

E. REMOTE VFD. PROVIDE EARLY BREAK CONTACTS ON ANY DISCONNECT SWITCHES REQUIRED BY CODE OR SHOWN ON PLANS THAT ARE DOWNSTREAM OF THE REMOTE VFD. PROVIDE CONDUIT AND CONDUCTORS AS REQUIRED TO INTERCONNECT THE CONTACT WITH VFD "ENABLE" TERMINALS. REFER TO MECHANICAL AND/OR PLUMBING PLANS FOR LOCATION. PROVIDE FEEDER(S) TO CONNECT REMOTE VFD AND MOTOR(S) AS REQUIRED.

F. INTEGRAL VFD PROVIDED WITH EQUIPMENT. REFER TO MECHANICAL AND/OR PLUMBING PLANS FOR LOCATION. CONNECT TO VFD AS REQUIRED.

G. INTEGRAL DISCONNECT PROVIDED WITH EQUIPMENT. REFER TO MECHANICAL AND/OR PLUMBING PLANS FOR LOCATION. CONNECT TO INTEGRAL DISCONNECT AS REQUIRED.

H. INTEGRAL DISCONNECT PROVIDED WITH VFD. REFER TO MECHANICAL AND/OR PLUMBING PLANS FOR LOCATION. CONNECT TO INTEGRAL DISCONNECT AS REQUIRED.

J. INDOOR UNIT POWERED FROM RESPECTIVE OUTDOOR UNIT. PROVIDE POWER AND CONTROL WIRING AS REQUIRED.

K. ROUTE THROUGH LINE VOLTAGE CONTROL FOR KITCHEN HOOD FIRE SUPPRESSION SYSTEM. SEE MECHANICAL, FIRE ALARM AND FOOD SERVICE PLANS FOR ADDITIONAL REQUIREMENTS.

MOTORIZED EQUIPMENT SCHEDULE

TAG	ITEM	DESCRIPTION	EQUIPMENT RATING VOLTS	PH.	MOTOR HP	MOTOR FLA	VFD FLA	MCA	MOCP	DISC. SW. SIZE STARTER SIZE	CIRCUIT DATA CONDUIT- WIRE	SPECIFIC NOTES
AC	MP-1	INDOOR AC UNIT	460	3		4.2	-	28.2	35 A	60AS	1"C. - 3#8, 1#8 GRD.	A
ACT	MP-1	AIR CURTAIN	120	1		7.5	-	9.4	15 A	Motor Rated	3/4"C. - 2#12, 1#12 GRD.	A,C
ACT	MP-2	AIR CURTAIN	120	1		7.5	-	9.4	15 A	Motor Rated	3/4"C. - 2#12, 1#12 GRD.	A,C
ACT	MP-3	AIR CURTAIN	120	1		15.0	-	18.8	20 A	Motor Rated	3/4"C. - 2#12, 1#12 GRD.	A,C
BS	MP-1	BRANCH SELECTOR	208	1		0.3	-	0.4	15 A	30AS	3/4"C. - 2#12, 1#12 GRD.	A
CU	MP-1A	CONDENSING UNIT	460	3		22.5	-	28.1	35 A	60AS	1"C. - 3#8, 1#8 GRD.	A
CU	MP-1B	CONDENSING UNIT	460	3		22.5	-	28.1	35 A	60AS	1"C. - 3#8, 1#8 GRD.	A
EF	MP-1	EXHAUST FAN	115	1		9.8	-	12.3	15 A	Motor Rated	3/4"C. - 2#12, 1#12 GRD.	A,C
EF	MP-2	EXHAUST FAN	115	1		5.8	-	7.3	15 A	Motor Rated	3/4"C. - 2#12, 1#12 GRD.	A,C
EF	MP-3	EXHAUST FAN	115	1		4.4	-	5.5	15 A	Motor Rated	3/4"C. - 2#12, 1#12 GRD.	A,C
EF	MP-4	EXHAUST FAN	115	1		9.8	-	12.3	15 A	Motor Rated	3/4"C. - 2#12, 1#12 GRD.	A,C
ERV	MP-1	ENERGY RECOVERY VENTILATOR UNIT	460	3		3.2	-	4.0	15 A	30AS	3/4"C. - 3#12, 1#12 GRD.	A
EUH	M-1	HEATER UNIT	208	1		12.7		15.9	20 A	30AS	3/4"C. - 2#12, 1#12 GRD.	A
FCU	MP-1	FAN COIL UNIT	208	1		0.5	-	6.0	15 A	30AS	3/4"C. - 2#12, 1#12 GRD.	A
FCU	MP-2	FAN COIL UNIT	208	1		1.3	-	1.6	15 A	30AS	3/4"C. - 2#12, 1#12 GRD.	A
FCU	MP-3	FAN COIL UNIT	208	1		1.3	-	1.6	15 A	30AS	3/4"C. - 2#12, 1#12 GRD.	A
FCU	MP-4	FAN COIL UNIT	208	1		0.2	-	0.3	15 A	30AS	3/4"C. - 2#12, 1#12 GRD.	A
HP	MP-1	HEAT PUMP	460	3		15.1		18.9	25 A	30AS	3/4"C. - 3#10, 1#10 GRD.	A
KEF	MP-1	EXHAUST FAN	460	3		4.8	-	6.0	15 A	Motor Rated	3/4"C. - 3#12, 1#12 GRD.	A,C
MAU	MP-1	MAKE-UP AIR UNIT	460	3		124.8	-	143.6	150 A	200AS	2-1/2"C. - 3#1/0, 1#4 GRD.	A
RTU	MP-1	ROOFTOP AC UNIT	208	3		31.4	-	34.1	40 A	60AS	1"C. - 3#8, 1#8 GRD.	A

WALL TYPES LEGEND

SEE SHEET G121 FOR ASSEMBLY TYPES

EXTERIOR

2 x 6 WOOD STUD WALL - NON RATED	0-W1-6	* ● #
2 x 12 WOOD STUD WALL - NON RATED	0-W1-12	* ● #

INTERIOR

2 x 4 WOOD STUD WALL - NON RATED	0-W2-4	* ● #
2 x 6 WOOD STUD WALL - NON RATED	0-W2-6	* ● #
2 x 8 WOOD STUD WALL - NON RATED	0-W2-8	* ● #
2 x 12 WOOD STUD WALL - NON RATED	0-W2-12	* ● #
2 x 4 WOOD STUD WALL - ACOUSTIC	0-W5-4	* ● #
2 x 6 WOOD STUD WALL - ACOUSTIC	0-W5-6	* ● #
2 X 4 WOOD STUD WALL - 1-HR FIRE PARTITION W/ PROTECTED OPENINGS	1-W3-4	* ● #
2 X 6 WOOD STUD WALL - 1-HR FIRE PARTITION W/ PROTECTED OPENINGS	1-W3-6	* ● #

WALL TYPE NOTES

PARTITION SYMBOL

KEYNOTES

2.022 PROVIDE 3/4"C.O.(S) TO RESPECTIVE CONTROL DEVICE(S) FOR CONTROL WIRING. REFER TO THE EQUIPMENT CONTROL WIRING DIAGRAMS FOR ADDITIONAL INFORMATION.

2.023 REFER TO MOTORIZED EQUIPMENT SCHEDULE FOR MOTOR FEEDER/ BRANCH CIRCUIT INFORMATION.

2.029 CONNECT AS REQUIRED TO AIR CURTAIN PER MANUFACTURER'S INSTALLATION INSTRUCTIONS. REFER TO MECHANICAL DRAWINGS. PROVIDE ALL MICROSWITCHES, CONDUIT, WIRING AND CONNECTIONS AS REQUIRED FOR A COMPLETE AND OPERABLE SYSTEM.

IDENTIFICATION STAMP
DIV. OF THE STATE ARCHITECT
APP: 02-118630 INC:
REVIEWED FOR
SS ☐ FLS ☐ ACS ☑
DATE: 04/13/2021

OFFICE OF THE STATE FIRE MARSHAL
APPROVED FIRE AND PANIC ONLY
Approval of this plan does not authorize or approve any omission or deviation from applicable regulations. Final approval is subject to field inspection. One set of approved plans shall be available on the project site at all times.
PERMIT NO.: 26 N 2332 CP
REVIEWED BY: LEO CATALLO, OSFM
DATE: 4 / /2021

GENERAL SERVICES
Department of General Services
State of California
Real Estate Services Division
Project Management & Development Branch
707 Third Street, Suite 4-105
West Sacramento, California 95605

NICHOLS MELBURG & ROSSETTO
ARCHITECTS + ENGINEERS
300 Knollcrest Drive
Redding, CA. 96002
(530) 222-3300 (530) 222-3538 FAX
http://www.nmrdesign.com

Copyright © 2019
All ideas, designs, arrangements and plans indicated or represented by this drawing are owned by, and the property of, NICHOLS, MELBURG and ROSSETTO and were created, evolved and developed for use on, and in connection with, the specified project. None of such ideas, designs, arrangements or plans shall be used by, or disclosed to any person, firm or corporation for any purpose whatsoever without the written permission of NICHOLS, MELBURG and ROSSETTO.

LICENSE STAMPS

REGISTERED PROFESSIONAL ENGINEER RAYMOND W. SIMPSON No. E15610 12/31/2021 ELECTRICAL STATE OF CALIFORNIA
Date Signed 3/25/2021

CONSULTANT
tklsc COLLABORATIVE
11870 Pierce Street, Suite 160
Riverside, California 92505
951.299.4160 www.tk1sc.com
Project Leader - Jerry Leonhardt
Electrical Lead - Reid Cordry
tk1sc Job #:2019-0228A

DRAWING STATUS
CONSTRUCTION DOCUMENTS

ISSUE

No.	Date	Description
1	10/20/2020	INITIAL PLAN REVIEW
2	01/22/2021	AGENCY RESUBMITTAL
3	03/22/2021	AGENCY RESUBMITTAL

If drawing is not 30" x 42" it is a reduced print

PROJECT
RESIDENTIAL CENTER, UKIAH: REPLACEMENT OF EXISTING RESIDENTIAL CENTER
440 EAST HILL ROAD
WILLITS, CALIFORNIA 95490
MENDOCINO COUNTY
CALIFORNIA CONSERVATION CORP

Supervisor	Designed	Drawn
		Author

DSA Application No.
XX-XXXXXX

SHEET TITLE
MULTI-PURPOSE BUIDLING MECHANICAL POWER PLAN

DGS Project Number	NMR Project Number
XXXXX	18-6456

Reference North

Sheet Scale: As indicated

Sheet Number: E301M

ISSUE DATE
July 9, 2021

Plot Date: 3/23/2021 4:07:42 PM
File Name: BIM 360:/CCC-Willits Residential Center/E_CCC Willits_MP_2019-0228A.rvt

PANEL: MPLK

MOUNTING: Flush **NEMA 3R:** No **FEED THRU:** No **M.L.O.:** No
DOUBLE-LUGS: No **200% NEUTRAL:** No **I/G BUS:** No
VOLTS: 120/208 Wye **PHASE:** 3 **WIRE:** 4 **AIC:** 10,000
SUPPLY FROM: TMPK **LOCATION:** RECEIVING M137 **MCB:** 100A-3P **BUS:** 100A

NOTE	DESCRIPTION	BKR	POLE	TYPE	CIRC	A		B		C		CIRC	TYPE	POLE	BKR	DESCRIPTION	NOTE
	R KITCHEN 60 QT MIXER	20 A	2	K	1	615	840					2	K	1	20 A	R KITCHEN FOOD PROCESSOR	
--	--	--	--	--	3			615	360			4	K	1	20 A	R KITCHEN WORK TABLE	
	R KITCHEN REACH-IN REFRIG.	20 A	1	K	5					650	1440	6	K	1	20 A	R KITCHEN HOT/COLD WELL	
	R KITCHEN RECH-IN FREEZER	20 A	1	K	7	1150	1140					8	K	1	20 A	R KITCHEN FOOD SHIELD / HEAT LAMP	
	R KITCHEN WORK TABLE	20 A	1	K	9			360	360			10	K	1	20 A	R KITCHEN SERVING COUNTER	
	R KITCHEN ICE MACHINE	20 A	1	K	11					1700	960	12	K	1	20 A	R SERVICE ALCOVE JUICE DISPENSER	
	R KITCHEN WORK TABLES	20 A	1	K	13	720	1320					14	K	1	20 A	R SERVICE ALCOVE MILK DISPENSER	
	R KITCHEN REACH-IN REFRIG.	20 A	1	K	15			650	1320			16	K	1	20 A	R SERVICE ALCOVE WATER / ICE DISPENSER	
	R KITCHEN REACH-IN FREEZER	20 A	1	K	17					1150	1440	18	K	1	20 A	R SERVICE ALCOVE COFFEE BREWER	
C,R1	P KITCHEN M123 FIRE SUPPRESSION	20 A	2	P	19	250	1600					20	K	1	20 A	P REFRIGERATOR M125	
--	--	--	--	--	21			250	800			22	K	2	20 A	K FREEZER M131	
C,R1	K KITCHEN M123 VFD HOOD	20 A	2	K	23					250	800	24	--	--	--	--	--
--	--	--	--	--	25	250	180					26	K	1	20 A	R RECEIVING TABLE	
	R KITCHEN M123	20 A	1	R	27			1440	1475			28	K	2	20 A	R SPIKE COOLER ICE MAKER	
C,R1	R KITCHEN FRYER DUMP STTATION	15 A	2	K	29					380	1475	30	--	--	--	--	--
--	--	15 A	--	--	31	380	360					32	K	1	20 A	R SPIKE COOLER WORK TABLE	
	R KITCHEN AUTOMATIC SLICER	20 A	1	K	33			670	1440			34	K	1	20 A	R SERVICE ALCOVE ICED TEA BREWER	
	R KITCHEN 20 QT MIXER	15 A	2	K	35					520	360	36	K	1	20 A	R SERVICE SERVING COUNTER	
--	--	15 A	--	--	37	520	1600					38	K	2	20 A	K KITCHEN M123	
	AIR CURTAIN MP- 1	15 A	1	M	39			900	1600			40	--	--	--	--	--
	AIR CURTAIN MP- 2	20 A	1	M	41					900	0	42	--	1	20 A	SPARE	
	AIR CURTAIN MP- 3	20 A	1	M	43	900	0					44	--	1	20 A	SPARE	
	K FREEZER M131	20 A	1	K	45			500	0			46	--	1	20 A	SPARE	
	K KITCHEN M123 DEMANDAIRE CONTROL PANEL	20 A	1	K	47					500	0	48	--	--	--	SPACE	--
	K KITCHEN M123 ELECTRIC GAS VALVE	15 A	1	P	49	250	0					50	--	--	--	SPACE	--
	SPARE	20 A	1	--	51			0	0			52	--	--	--	SPACE	--
	SPARE	20 A	1	--	53					0	0	54	--	--	--	SPACE	--
					PHASE TOTALS:	12075.00 VA		12740.00 VA		12525.00 VA							
	COMMENTS:					100.6 A		106.7 A		105.0 A							

LOAD TYPE KEY	LOAD CLASSIFICATION	CONNECTED LOAD	AVG. DEMAND...	ESTIMATED DEMAND	PANEL TOTALS	AMPS	KVA
H = HVAC EQUIP	P	0.75 kVA	100.00%	0.75 kVA			
K = KITCHEN	R	1.44 kVA	100.00%	1.44 kVA	TOTAL CONNECTED LOAD:	103.6 A	37.34 kVA
L = LIGHTING	K	32.45 kVA	65.00%	21.09 kVA	TOTAL DEMAND LOAD:	72.7 A	26.21 kVA
M = MOTOR	M	2.70 kVA	108.33%	2.93 kVA	HIGH PHASE:	107 A	12.74 kVA
P = POWER							
R = RECEPTACLE							
W = WATER HEATER							

PANEL: MPHK

MOUNTING: Flush **NEMA 3R:** No **FEED THRU:** No **M.L.O.:** No
DOUBLE-LUGS: No **200% NEUTRAL:** No **I/G BUS:** No
VOLTS: 480/277 Wye **PHASE:** 3 **WIRE:** 4 **AIC:** 30,000
SUPPLY FROM: DBMP **LOCATION:** ELEC. M116 **MCB:** 400A-3P **BUS:** 400A

NOTE	DESCRIPTION	BKR	POLE	TYPE	CIRC	A (VA)		B (VA)		C (VA)		CIRC	TYPE	POLE	BKR	DESCRIPTION	NOTE
C,R1	P KITCHEN 40 GAL. TILT SKILLET	30 A	3	K	1	6013	6430					2	K	3	30 A	P DISHWASH M133	
--	--	--	--	--	3			6013	6430			4	--	--	--	--	--
--	--	--	--	--	5					6013	6430	6	--	--	--	--	--
C,R1	P KITCHEN 40 GAL. TILT KETTLE	30 A	3	K	7	6097	7897					8	K	3	40 A	P DISHWASH M133	
--	--	--	--	--	9			6097	7897			10	--	--	--	--	--
--	--	--	--	--	11					6097	7897	12	--	--	--	--	--
C,R1	R KITCHEN M123	30 A	3	K	13	5820	2500					14	K	3	20 A	P COMPACTOR	
--	--	--	--	--	15			5820	2500			16	--	--	--	--	--
--	--	--	--	--	17					5820	2500	18	--	--	--	--	--
	SPARE	20 A	1	--	19	0	0					20	--	1	20 A	SPARE	
	SPARE	20 A	1	--	21			0	0			22	--	1	20 A	SPARE	
	SPARE	20 A	1	--	23					0	0	24	--	1	20 A	SPARE	
	SPARE	20 A	1	--	25	0	0					26	--	1	20 A	SPARE	
	SPARE	20 A	1	--	27			0	0			28	--	1	20 A	SPARE	
	SPARE	20 A	1	--	29					0	0	30	--	1	20 A	SPARE	
	SPARE	20 A	1	--	31	0	0					32	--	1	20 A	SPARE	
--	SPACE	--	--	--	33			0	0			34	--	--	--	SPACE	--
--	SPACE	--	--	--	35					0	0	36	--	--	--	SPACE	--
--	SPACE	--	--	--	37	0	12075					38	M; ...	3	60 A	TRANSFORMER TMPK	B
--	SPACE	--	--	--	39			0	12740			40	--	--	--	--	--
--	SPACE	--	--	--	41					0	12525	42	--	--	--	--	--
					PHASE TOTALS:	46831.67 VA		47496.67 VA		47281.67 VA							
	COMMENTS:					169.1 A		171.7 A		170.9 A							

LOAD TYPE KEY	LOAD CLASSIFICATION	CONNECTED LOAD	AVG. DEMAND...	ESTIMATED DEMAND	PANEL TOTALS	AMPS	KVA
H = HVAC EQUIP	P	0.75 kVA	100.00%	0.75 kVA			
K = KITCHEN	R	1.44 kVA	100.00%	1.44 kVA	TOTAL CONNECTED LOAD:	170.3 A	141.61 kVA
L = LIGHTING	K	136.72 kVA	65.00%	88.87 kVA	TOTAL DEMAND LOAD:	113.0 A	93.98 kVA
M = MOTOR	M	2.70 kVA	108.33%	2.93 kVA	HIGH PHASE:	172 A	47.50 kVA
P = POWER							
R = RECEPTACLE							
W = WATER HEATER							

PANEL: MPHA

MOUNTING: Surface **NEMA 3R:** No **FEED THRU:** No **M.L.O.:** Yes
DOUBLE-LUGS: No **200% NEUTRAL:** No **I/G BUS:** No
VOLTS: 480/277 Wye **PHASE:** 3 **WIRE:** 4 **AIC:** 30,000
SUPPLY FROM: DBMP **LOCATION:** ELEC. M116 **MCB:** M.L.O. **BUS:** 400A

NOTE	DESCRIPTION	BKR	POLE	TYPE	CIRC	A (VA)		B (VA)		C (VA)		CIRC	TYPE	POLE	BKR	DESCRIPTION	NOTE
H	SITE LIGHTING	20 A	1	L	1	630	480					2	L	1	20 A	L EXTERIOR	H
	L Room M119	20 A	1	L	3			3252	2358			4	L	1	20 A	L Room M137, M123, M128, M133, M126, M134,...	
	L Room M119	20 A	1	L	5					2182	1254	6	L	1	20 A	L Room M116, M118, M102, M113, M112, M110,...	
	SPARE	20 A	1	--	7	0	974					8	L	1	20 A	L DINING HALL M101	
	SPARE	20 A	1	--	9			0	0			10	--	1	20 A	SPARE	
	M HP MP-1	25 A	3	M	11					4010	5977	12	M	3	35 A	CU MP-1B	
--	--	--	--	--	13	4010	5977					14	--	--	--	--	--
--	--	--	--	--	15			4010	5977			16	--	--	--	--	--
	M ERV MP-1	15 A	3	M	17					850	33143	18	M	3	150 A	M MAU MP-1	
--	--	--	--	--	19	850	33143					20	--	--	--	--	--
--	--	--	--	--	21			850	33143			22	--	--	--	--	--
	M AC MP-1	35 A	3	M	23					5990	1273	24	M	3	15 A	M KEF MP-1	
--	--	--	--	--	25	5990	1273					26	--	--	--	--	--
--	--	--	--	--	27			5990	1273			28	--	--	--	--	--
	CU MP-1A	35 A	3	M	29					5977	0	30	--	1	20 A	SPARE	
--	--	--	--	--	31	5977	0					32	--	1	20 A	SPARE	
--	--	--	--	--	33			5977	0			34	--	1	20 A	SPARE	
	SPARE	20 A	1	--	35					0	0	36	--	1	20 A	SPARE	
	SPARE	20 A	1	--	37	0	0					38	--	1	20 A	SPARE	
--	SPACE	--	--	--	39			0	0			40	--	--	--	SPACE	--
--	SPACE	--	--	--	41					0	0	42	--	--	--	SPACE	--
					PHASE TOTALS:	59304.00 VA		62829.60 VA		60656.00 VA							
	COMMENTS:					214.1 A		227.6 A		219.7 A							

LOAD TYPE KEY	LOAD CLASSIFICATION	CONNECTED LOAD	AVG. DEMAND...	ESTIMATED DEMAND	PANEL TOTALS	AMPS	KVA
H = HVAC EQUIP	L	11.13 kVA	125.00%	13.91 kVA			
K = KITCHEN	M	171.66 kVA	114.48%	196.52 kVA	TOTAL CONNECTED LOAD:	219.9 A	182.79 kVA
L = LIGHTING					TOTAL DEMAND LOAD:	253.1 A	210.43 kVA
M = MOTOR					HIGH PHASE:	228 A	62.83 kVA
P = POWER							
R = RECEPTACLE							
W = WATER HEATER							

PANEL: MPLB

MOUNTING: Surfacce **NEMA 3R:** No **FEED THRU:** No **M.L.O.:** Yes
DOUBLE-LUGS: No **200% NEUTRAL:** No **I/G BUS:** No
VOLTS: 120/208 Wye **PHASE:** 3 **WIRE:** 4 **AIC:** 10,000
SUPPLY FROM: MPLA **LOCATION:** ELEC. M116 **MCB:** M.L.O. **BUS:** 100A

NOTE	DESCRIPTION	BKR	POLE	TYPE	CIRC	A (VA)		B (VA)		C (VA)		CIRC	TYPE	POLE	BKR	DESCRIPTION	NOTE
	M EUH MP-1	20 A	2	M	1	1320	3770					2	M	3	40 A	M RTU MP-1	
--	--	--	--	--	3			1320	3770			4	--	--	--	--	--
	M EF MP-1, MP-2	20 A	1	M	5					1800	3770	6	--	--	--	--	--
	M BS MP-1	15 A	2	M	7	30	1130					8	M	1	15 A	M EF MP-4	
--	--	--	--	--	9			30	20			10	M	2	15 A	M FCU MP-4	
	M FCU MP-2, MP-3	20 A	2	M	11					270	20	12	--	--	--	--	--
--	--	--	--	--	13	270	510					14	M	1	15 A	M EF MP-3	
	M STORAGE M118	20 A	2	M	15			500	720			16	P	1	20 A	P MULTI-USE COURT WINDOW SHADES	
--	--	--	--	--	17					500	540	18	P	1	20 A	P DINING HALL M101	
	P GENERATOR BATTERY CHARGER	20 A	1	P	19	1200	1000					20	R	1	30 A	R ELEC. M116 IDF	
	P GEN. JACKET WTR HTR	20 A	1	P	21			1500	540			22	R	1	20 A	R ROOF RECEPTACLES	
	P GEN. JACKET WTR HTR	20 A	1	P	23					1500	579	24	L; R	1	20 A	FCU LIGHTS	
	SPARE	20 A	1	--	25	0	193					26	L; R	1	20 A	FCU LIGHTS	
	SPARE	20 A	1	--	27			0	0			28	--	1	20 A	SPARE	
	SPARE	20 A	1	--	29					0	0	30	--	1	20 A	SPARE	
	SPARE	20 A	1	--	31	0	0					32	--	1	20 A	SPARE	
--	SPACE	--	--	--	33			0	0			34	--	--	--	SPACE	--
--	SPACE	--	--	--	35					0	0	36	--	--	--	SPACE	--
--	SPACE	--	--	--	37	0	0					38	--	--	--	SPACE	--
--	SPACE	--	--	--	39			0	0			40	--	--	--	SPACE	--
--	SPACE	--	--	--	41					0	0	42	--	--	--	SPACE	--
					PHASE TOTALS:	9423.00 VA		8400.00 VA		8979.00 VA							
	COMMENTS:					79.3 A		70.0 A		75.6 A							

LOAD TYPE KEY	LOAD CLASSIFICATION	CONNECTED LOAD	AVG. DEMAND...	ESTIMATED DEMAND	PANEL TOTALS	AMPS	KVA
H = HVAC EQUIP	P	5.46 kVA	100.00%	5.46 kVA			
K = KITCHEN	R	2.26 kVA	100.00%	2.26 kVA	TOTAL CONNECTED LOAD:	74.4 A	26.80 kVA
L = LIGHTING	L	0.05 kVA	125.00%	0.07 kVA	TOTAL DEMAND LOAD:	82.3 A	29.64 kVA
M = MOTOR	M	19.03 kVA	114.86%	21.86 kVA	HIGH PHASE:	79 A	9.42 kVA
P = POWER							
R = RECEPTACLE							
W = WATER HEATER							

PANEL: MPLA

MOUNTING: Surface **NEMA 3R:** No **FEED THRU:** No **M.L.O.:** No
DOUBLE-LUGS: No **200% NEUTRAL:** No **I/G BUS:** No
VOLTS: 120/208 Wye **PHASE:** 3 **WIRE:** 4 **AIC:** 10,000
SUPPLY FROM: TMP **LOCATION:** ELEC. M116 **MCB:** 350A-3P **BUS:** 400A

NOTE	DESCRIPTION	BKR	POLE	TYPE	CIRC	A (VA)		B (VA)		C (VA)		CIRC	TYPE	POLE	BKR	DESCRIPTION	NOTE
	R Room M115, M110, M111	20 A	1	R; K	1	540	900					2	R	1	20 A	R Room M120, M101	
	R Room M115, M111	20 A	1	R; K	3			540	1080			4	R	1	20 A	R DINING HALL M101	
	R HALL M102	20 A	1	R	5					180	1540	6	R	1	20 A	R DINING HALL M101	
	R Room M104, M109, M105	20 A	1	R; K	7	540	360					8	R	1	20 A	R SERVICE M121	
	R Room M109, M105	20 A	1	R; K	9			540	180			10	R	1	20 A	R DISHWASH M133	
	R Room M103, M102	20 A	1	R	11					720	900	12	R	1	20 A	R DRY STORAGE M126	
	R ELEC. M116	20 A	1	R	13	180	540					14	R	1	20 A	R OFFICE M124	
	R Room M119, M116	20 A	1	R	15			540	540			16	R	1	20 A	R OFFICE M124	
	R MULTI-USE COURT M119	20 A	1	R	17					540	360	18	R; K	1	20 A	R Room M128, M129	
	R Room M119, M118	20 A	1	R; P	19	1040	14000					20	P	2	20 A	P MECH M117 EWH	
	R MULTI-USE COURT M119	20 A	1	R	21			540	14000			22	--	--	--	--	--
	R EXTERIOR	20 A	1	R	23					540	2500	24	P	2	20 A	P JAN. M129 EWH	
	R EXTERIOR	20 A	1	R	25	540	2500					26	--	--	--	--	--
	P MULTI-USE COURT M119 BACKBOARD MOTOR	20 A	1	P	27			1000	1500			28	P	1	20 A	P MULTI-USE COURT M119 WINDOW SHADES	
	P MULTI-USE COURT M119 BACKBOARD MOTOR	20 A	1	P	29					1000	1000	30	P	1	20 A	P SERVICE ALCOVE M134 COILING DOOR	
	P SERVICE M121 COILING DOOR	20 A	1	P	31	1000	1000					32	P	1	20 A	P SERVICE M121 COILING DOOR	
	P RECEIVING M137 COILING DOOR	20 A	1	P	33			1000	17			34	P	3	20 A	P COMPOSTER	
	P JAN. M129 EWH BOOSTER FAN	20 A	1	P	35					150	17	36	--	--	--	--	--
	PANEL MPLB	100 A	3	L; ...	37	9423	17					38	--	--	--	--	--
--	--	--	--	--	39			8400	230			40	L	1	20 A	L,R GENERATOR YARD	
--	--	--	--	--	41					8979	0	42	--	1	20 A	SPARE	
					PHASE TOTALS:	32579.67 VA		30106.67 VA		18425.67 VA							
	COMMENTS:					286.5 A		265.9 A		153.5 A							

LOAD TYPE KEY	LOAD CLASSIFICATION	CONNECTED LOAD	AVG. DEMAND...	ESTIMATED DEMAND	PANEL TOTALS	AMPS	KVA
H = HVAC EQUIP	P	46.66 kVA	100.00%	46.66 kVA			
K = KITCHEN	R	14.24 kVA	85.11%	12.12 kVA	TOTAL CONNECTED LOAD:	225.1 A	81.11 kVA
L = LIGHTING	K	0.90 kVA	70.00%	0.63 kVA	TOTAL DEMAND LOAD:	226.6 A	81.62 kVA
M = MOTOR	L	0.28 kVA	125.00%	0.35 kVA	HIGH PHASE:	286 A	32.58 kVA
P = POWER	M	19.03 kVA	114.86%	21.86 kVA			
R = RECEPTACLE							
W = WATER HEATER							

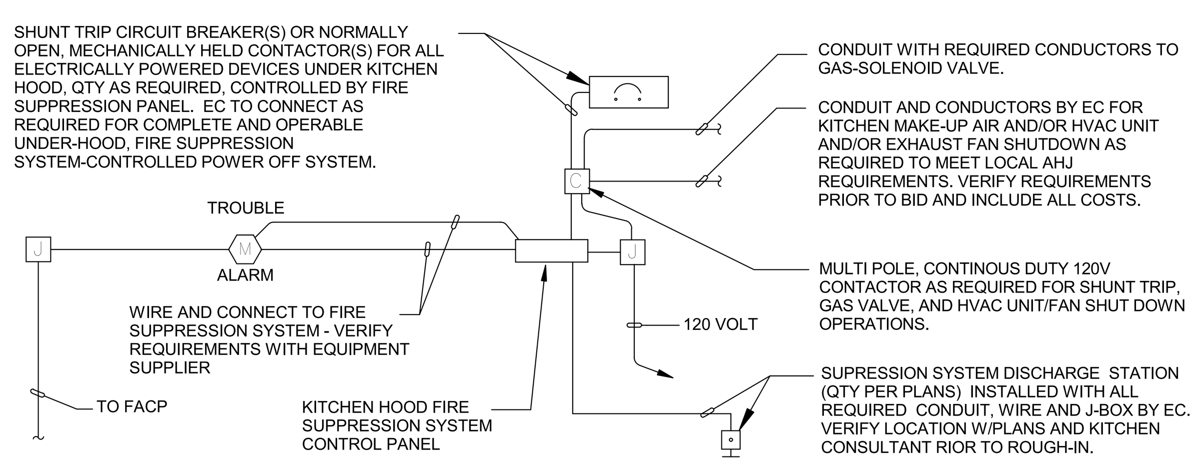

KITCHEN HOOD FIRE SUPPRESSION SYSTEM SCHEMATIC (1)
SCALE: N.T.S.

PANEL SCHEDULE SPECIFICATIONS:

1. WHERE PANEL IS INDICATED TO INCLUDE FEED THRU LUGS, PROVIDE FEED THROUGH LUGS AT THE OPPOSITE END OF THE PANELBOARD FROM THE PANELBOARD MAIN LUGS.
2. WHERE PANEL IS INDICATED TO INCLUDE DOUBLE LUGS, PROVIDE A DOUBLE LUG KIT AT THE SAME END OF THE PANELBOARD AS THE PANELBOARD MAIN LUGS.
3. WHERE PANEL IS INDICATED TO INCLUDE 200% NEUTRAL, PROVIDE PANELBOARDS UL LISTED AS HAVING NEUTRAL BUSSES RATED TO CARRY 200 PERCENT OF THE CURRENT CARRYING CAPACITY OF THE PHASE BUSSING. OTHERWISE, NEUTRAL BUSSING TO BE FULL SIZE AND RECTANGULAR.
4. WHERE PANEL IS INDICATED TO INCLUDE AN I/G BUS, PROVIDE PANELBOARDS WITH AN ISOLATED GROUND BUS, DRILLED AND TAPPED FOR NUMBER OF ISOLATED GROUND CONDUCTORS SHOWN, AS WELL AS FOR ALL SPARES AND SPACES SHOWN ON THE PANELBOARD.
5. WHERE PANEL CIRCUIT BREAKER RATING IS SHOWN AS SERIES RATED, PROVIDE CIRCUIT BREAKERS IN PANELBOARD WHICH ARE SERIES RATED WITH THE UPSTREAM SYSTEM FOR THE AVAILABLE FAULT CURRENT. THE PANELBOARD SHALL BE MARKED WITH THE SERIES CONNECTED RATINGS, AS WELL AS ALL MARKING AS REQUIRED BY THE NEC, OR CEC WHERE ADOPTED, 240-83(C).
6. WHERE PANEL IS INDICATED AS RECESSED OR FLUSH MOUNTED, PROVIDE SPARE CONDUITS STUBBED UP INTO THE ACCESSIBLE CEILING SPACE. PROVIDE ONE (1) 3/4" CONDUIT ONLY FOR EACH THREE (3) SPARES OR SPACES, MINIMUM OF TWO (2). EACH CONDUIT SHALL BE TAGGED, CAPPED AND MARKED FOR FUTURE USE.
7. ALL BUSSING SHALL BE TIN PLATED ALUMINUM.
8. ALL CIRCUIT BREAKERS USED AS SWITCHES SHALL BE UL LISTED AND LABELED "SWD" FOR SWITCHING DUTY.
9. PROVIDE BREAKER INTERLOCK WITH ADJACENT BREAKER(S) FOR ANY MULTI-WIRE BRANCH CIRCUIT. BREAKER INTERLOCK GROUPING SHALL BE BY BRANCH CIRCUIT GROUP (i.e. MULTIPLE CIRCUITS SHARING A COMMON NEUTRAL (NEC, OR CEC WHERE ADOPTED, 210.4 (B),) COMMON YOKE (NEC, OR CEC WHERE ADOPTED, 210.7(B) ,) OR FURNITURE SYSTEM NEC OR CEC WHERE ADOPTED, 605.6 AND 605.7). WHERE AN EXISTING PANEL IS BEING ALTERED OR MODIFIED IN ANY WAY, CONTRACTOR SHALL INCLUDE ALL COSTS IN BASE BID TO ADD BREAKER INTERLOCKS TO EXISTING MULTI-WIRE BRANCH CIRCUITS BASED ON CONTRACTOR'S INVESTIGATION OF EXISTING CONDITIONS.
10. PROVIDE BREAKER LOCK OFF DEVICE ON ANY CIRCUIT BREAKER FEEDING A TRANSFORMER AS REQUIRED, PER NEC, OR CEC WHERE ADOPTED, 450.14. WHERE AN EXISTING PANEL IS BEING ALTERED OR MODIFIED IN ANY WAY, CONTRACTOR SHALL INCLUDE ALL COSTS IN BASE BID TO ADD BREAKER LOCK-OFF DEVICES TO EXISTING TRANSFORMER CIRCUIT BREAKERS BASED ON CONTRACTOR'S INVESTIGATION OF EXISTING CONDITIONS.
11. ALL CIRCUIT BREAKERS SHALL BE BOLT-ON TYPE AND SHALL BE SUITABLE FOR 75 DEGREE AMPACITY CONDUCTORS.
12. PANELS SHALL BE OF THE DEAD FRONT SAFETY TYPE. PANELS SHALL BE MINIMUM 20" WIDE AND 5-3/4" DEEP UNLESS OTHERWISE NOTED ON PLAN.
13. COORDINATE WITH APPLICABLE TRADE TO INSURE RECESSED MOUNTED PANELBOARDS WILL SEAT FLUSH IN THE WALLS PROVIDED. PANEL TRIMS SHALL HAVE CONCEALED DOORS AND FASTENERS WITH FLUSH TYPE COMBINATION LOCK AND CATCH, TWO MILLED TYPE KEYS SUPPLIED WITH EACH PANEL. ALL LOCKS SHALL BE KEYED ALIKE AND EACH DOOR SHALL HAVE A PLASTIC COVERED DIRECTORY FRAME WITH A TYPED IDENTIFICATION CARD OF ALL CIRCUIT AND PANEL NUMBERS FOR BRANCH CIRCUIT PANELBOARDS.
14. UPON PROJECT COMPLETION, CONTRACTOR SHALL INSTALL TYPED AS-BUILT PANEL DIRECTORIES IN EACH PANEL WITHIN THE MFGR-PROVIDED DIRECTORY HOLDER. THE DIRECTORY SHALL CLEARLY IDENTIFY EACH CIRCUIT TO ITS CLEAR, EVIDENT, AND SPECIFIC PURPOSE OR USE. EACH CIRCUIT IDENTITY SHALL INCLUDE SUFFICIENT DETAIL TO ALLOW EACH CIRCUIT TO BE DISTINGUISHED FROM ALL OTHERS PER NEC, OR CEC WHERE ADOPTED, ART 408.1 AND 408.4 . HANDWRITTEN DIRECTORIES ARE UNACCEPTABLE. COPIES OF AS-BUILT PANEL SCHEDULES SHALL BE PLACED IN PANEL DIRECTORIES. E.C. TO INCLUDE ALL COSTS REQUIRED FOR LARGER-THAN-STANDARD CUSTOM PANEL DIRECTORY HOLDERS TO ACCOMMODATE COPIES OF AS-BUILT PANEL SCHEDULES.
15. PANELBOARDS SHALL BE MANUFACTURED BY G.E., CUTLER-HAMMER, SIEMENS, OR SQUARE "D". FUSED PANEL BOARDS SHALL BE BY COOPER BUSSMANN.
16. PROVIDE SHOP DRAWING SUBMITTAL PER THE ELECTRICAL SPECIFICATION SUBMITTAL REQUIREMENTS FOR EACH PANEL DEPICTING CONFORMANCE WITH THE ABOVE NOTES AND SCHEDULES.

SPECIFIC PANEL SCHEDULE NOTES:

"A" PROVIDE LOCK-ON DEVICE.
"B" PROVIDE LOCK-OFF DEVICE.
"C" PROVIDE SHUNT TRIP DEVICE.
"D" PROVIDE GFCI TYPE DEVICE.
"E" PROVIDE A RED CIRCUIT BREAKER.
"F" PROVIDE A NEW BREAKER TO MATCH THE EXISTING IN PANEL.
"G" EXISTING BREAKER WITH NEW LOAD.
"H" PROVIDE RELAY AS REQUIRED FOR CONTROL OF EXTERIOR LIGHTING BY PHOTOCELL ON / TIMECLOCK OFF. MOUNT RELAY IN SEPARATE BARRIERED COMPARTMENT OF PANELBOARD.
"R1" INDICATES CIRCUIT CONTROLLED BY RELAY OPERATED BY FIRE ALARM SUPPRESSION SYSTEM.

PANEL SCHEDULE INDEX		
MPLK	MPHK	MPHA
XXXX	MPLB	MPLA
XXXX	XXXX	XXXX

IDENTIFICATION STAMP
DIV. OF THE STATE ARCHITECT
APP: 02-118630 INC:
REVIEWED FOR
SS ☐ FLS ☐ ACS ☑
DATE: 04/13/2021

OFFICE OF THE STATE FIRE MARSHAL
APPROVED FIRE AND PANIC ONLY
Approval of this plan does not authorize or approve any omission or deviation from applicable regulations. Final approval is subject to field inspection. One set of approved plans shall be available on the project site at all times.
PERMIT NO.: 20-N-2332-CP
REVIEWED BY: LITO CATAYLO, OSFM
DATE: 3/1/2021

DGS GENERAL SERVICES
Department of General Services
State of California
Real Estate Services Division
Project Management & Development Branch
707 Third Street, Suite 4-105
West Sacramento, California 95605

NICHOLS MELBURG & ROSSETTO
ARCHITECTS + ENGINEERS
300 Knollcrest Drive
Redding, CA. 96002
(530) 222-3300 (530) 222-3538 FAX
http://www.nmrdesign.com

Copyright © 2019
All ideas, designs, arrangements and plans indicated or represented by this drawing are owned by, and the property of, NICHOLS, MELBURG and ROSSETTO and were created, evolved and developed for use on, and in conjunction with, the specified project. None of such ideas, designs, arrangements or plans shall be used by, or disclosed to any person, firm or corporation for any purpose whatsoever without the written permission of NICHOLS, MELBURG and ROSSETTO.

LICENSE STAMPS
REGISTERED PROFESSIONAL ENGINEER RAYMOND W. SWARTZ No. E15610 Ex. 12/31/2021 ELECTRICAL STATE OF CALIFORNIA
Date Signed: 3/25/2021

CONSULTANT
tk1sc COLLABORATIVE
11870 Pierce Street, Suite 160
Riverside, California 92505
951.299.4160 www.tk1sc.com
Project Leader - Jerry Leonhardt
Electrical Lead - Reid Cordry
tk1sc Job #:2019-0228A

DRAWING STATUS
CONSTRUCTION DOCUMENTS

ISSUE

No.	Date	Description
1	10/20/2020	INITIAL PLAN REVIEW
2	01/22/2021	AGENCY RESUBMITTAL
3	03/22/2021	AGENCY RESUBMITTAL

If drawing is not 30" x 42" it is a reduced print

PROJECT
RESIDENTIAL CENTER, UKIAH: REPLACEMENT OF EXISTING RESIDENTIAL CENTER
440 EAST HILL ROAD
WILLITS, CALIFORNIA 95490
MENDOCINO COUNTY
CALIFORNIA CONSERVATION CORP

Supervisor | Designed | Drawn: Author
DSA Application No.: XX-XXXXXX

SHEET TITLE
MULTI-PURPOSE BUILDING PANEL SCHEDULES

DGS Project Number: XXXXX
NMR Project Number: 18-6456
Reference North: NORTH
Sheet Scale: 12" = 1'-0"
Sheet Number: E407M
ISSUE DATE: July 9, 2021

Plot Date: 3/23/2021 4:07:46 PM
File Name: BIM 360://CCC Willits Residential Center/E_CCC Willits_MP_2019-0228A.rvt

STATE OF CALIFORNIA
Indoor Lighting
NRCC-LTI-E
CALIFORNIA ENERGY COMMISSION

CERTIFICATE OF COMPLIANCE			NRCC-LTI-E
Project Name:	Replacement of Existing Residential Center	Report Page:	(Page 6 of 8)
Project Address:	440 East Hill Road	Date Prepared:	10/20/2020

Q. RATED POWER REDUCTION COMPLIANCE FOR ALTERATIONS

This section does not apply to this project.

R. 80% LIGHTING POWER FOR ALLALTERATIONS - CONTROLS EXCEPTIONS

This section does not apply to this project.

S. DAYLIGHT DESIGN POWER ADJUSTMENT FACTOR (PAF)

This section does not apply to this project.

T. DECLARATION OF REQUIRED CERTIFICATES OF INSTALLATION

Selections have been made based on information provided in this document. If any selection have been changed by permit applicant, an explanation should be included in Table E. Additional Remarks. These documents must be provided to the building inspector during construction and can be found online at https://www.energy.ca.gov/title24/2019standards/2019_compliance_documents/Nonresidential_Documents/NRCI/

Yes	No	Form/Title	Field Inspector Pass	Field Inspector Fail
●	○	NRCI-LTI-01-E - Must be submitted for all buildings	☐	☐
○	●	NRCI-LTI-02-E - Must be submitted for a lighting control system, or for an Energy Management Control System (EMCS), to be recognized for compliance.	☐	☐
○	●	NRCI-LTI-04-E - Must be submitted for two interlocked systems serving an auditorium, a convention center, a conference room, a multipurpose room or a theater to be recognized for compliance.	☐	☐
○	●	NRCI-LTI-05-E- Must be submitted for a Power Adjustment Factor (PAF) to be recognized for compliance.	☐	☐
○	●	NRCI-LTI-06-E- Must be submitted for additional wattage installed in a video conferencing studio to be recognized for compliance.	☐	☐

STATE OF CALIFORNIA
Indoor Lighting
NRCC-LTI-E
CALIFORNIA ENERGY COMMISSION

CERTIFICATE OF COMPLIANCE			NRCC-LTI-E
Project Name:	Replacement of Existing Residential Center	Report Page:	(Page 3 of 8)
Project Address:	440 East Hill Road	Date Prepared:	10/20/2020

F. INDOOR LIGHTING FIXTURE SCHEDULE

17	17 - 2x2 LED	No	No	21	JA8 Lamp	1	No	21	☐	☐
19	19 - Linear LED	No	No	16	JA8 Lamp	19	No	304	☐	☐
23	23 - Recessed LED Linear	No	No	68	JA8 Lamp	24	No	1,632	☐	☐
24	24 - LED Track Light	Yes	No	420	JA8 Lamp	1	No	420	☐	☐
3	3 - LED Sriplight 4'	No	No	16	JA8 Lamp	8	No	128	☐	☐
5	5 - 1x4 Recessed LED	No	No	29.8	JA8 Lamp	1	No	29.8	☐	☐
6	6 - LED High Bay	No	No	155	JA8 Lamp	20	No	3,100	☐	☐
7	7 - LED Surface - Shower	No	No	12	JA8 Lamp	6	No	72	☐	☐
9	9 - Recessed LED Downlight	No	No	11	JA8 Lamp	62	No	682	☐	☐
							Total Designed Watts: CONDITIONED SPACES		8,077.6	

[1]FOOTNOTE: Design Watts for small aperture and color changing luminaires which qualify per §140.6(a)4B is adjusted to be 75% of their rated wattage. Table F automatically makes this adjustment, the permit applicant should enter full rated wattage in column 05.

G. MODULAR LIGHTING SYSTEMS

This table calculates wattage for modular lighting systems/ track lighting fixtures indicated on Table F and transfers wattage to Table F.

01 Name or Item Tag	02 Complete Track Description	03 Calculation Method per §130.0(c)6										04 Track Wattage
24	24 - LED Track Light	☒	i Installed Luminaires vs Default 30 W/ft		☐	ii Current Limiter		☐	iii Overcurrent Protection Panel		☐	iv Power supplied by driver, power supply or transformer[1]	
		Number of luminaires in system	x	Rated Watts per luminaire	=	Total Watts	OR	Linear ft of track or busway	x	Default W/LF 30	=	Total Watts	420
								14		30		420	

[1]FOOTNOTE: For power-over-Ethernet lighting systems, power provided to installed non-lighting devices may be subtracted from the total power rating of the power-over-Ethernet system..

Registration Number: CA Building Energy Efficiency Standards - 2019 Nonresidential Compliance
Registration Date/Time: Report Version: 2019.0.001 Schema Version: rev 20190401
Registration Provider: EnergySoft Report Generated: 2020-10-20 09:12:20

STATE OF CALIFORNIA
Indoor Lighting
NRCC-LTI-E
CALIFORNIA ENERGY COMMISSION

CERTIFICATE OF COMPLIANCE			NRCC-LTI-E
Project Name:	Replacement of Existing Residential Center	Report Page:	(Page 1 of 8)
Project Address:	440 East Hill Road	Date Prepared:	10/20/2020

A. GENERAL INFORMATION

01	Project Location (city)	Willits		04	Total Conditioned Floor Area (ft²)	14,718	
02	Climate Zone	2		05	Total Unconditioned Floor Area (ft²)	0	
03	Occupancy Types Within Project (select all that apply):			06	# of Stories (Habitable Above Grade)	1	
☒ Office	☐ Retail	☐ Warehouse	☐ Hotel/Motel	☐ School	☒ Support Areas		
☐ Parking Garage	☐ High-Rise Residential	☐ Relocatable	☐ Healthcare	☒ Other (Write in)	See Table I		

B. PROJECT SCOPE

This table includes any lighting systems that are within the scope of the permit application and are demonstrating compliance using the prescriptive path outlined in §140.6 or §141.0(b)2 for alterations.

Scope of Work	Conditioned Spaces		Unconditioned Spaces	
01	02	03	04	05
My Project Consists of (check all that apply):	Calculation Method	Area (ft²)	Calculation Method	Area (ft²)
☒ New Lighting System	Area Category Method	14718	Area Category Method	0
☐ New Lighting System - Parking Garage				
☐ Altered Lighting System				
Total Area of Work (ft²)	14718		0	

Registration Number: CA Building Energy Efficiency Standards - 2019 Nonresidential Compliance
Registration Date/Time: Report Version: 2019.0.001 Schema Version: rev 20190401
Registration Provider: EnergySoft Report Generated: 2020-10-20 09:12:20

STATE OF CALIFORNIA
Indoor Lighting
NRCC-LTI-E
CALIFORNIA ENERGY COMMISSION

CERTIFICATE OF COMPLIANCE			NRCC-LTI-E
Project Name:	Replacement of Existing Residential Center	Report Page:	(Page 7 of 8)
Project Address:	440 East Hill Road	Date Prepared:	10/20/2020

U. DECLARATION OF REQUIRED CERTIFICATES OF ACCEPTANCE

Selections have been made based on information provided in this document. If any selection have been changed by the permit applicant, an explanation should be included in Table E. Additional Remarks. These documents must be provided to the building inspector during construction and any with "-A" in the form name must be completed through an Acceptance Test Technician Certification Provider (ATTCP). For more information visit: http://www.energy.ca.gov/title24/attcp/providers.html

Yes	No	Form/Title	Field Inspector Pass	Field Inspector Fail
●	○	NRCA-LTI-02-A - Must be submitted for occupancy sensors and automatic time switch controls.	☐	☐
○	●	NRCA-LTI-03-A - Must be submitted for automatic daylight controls.	☐	☐
●	○	NRCA-LTI-04-A - Must be submitted for demand responsive lighting controls.	☐	☐
○	●	NRCA-LTI-05-A. - Must be submitted for institutional tuning power adjustment factor (PAF)	☐	☐

Registration Number: CA Building Energy Efficiency Standards - 2019 Nonresidential Compliance
Registration Date/Time: Report Version: 2019.0.001 Schema Version: rev 20190401
Registration Provider: EnergySoft Report Generated: 2020-10-20 09:12:20

STATE OF CALIFORNIA
Indoor Lighting
NRCC-LTI-E
CALIFORNIA ENERGY COMMISSION

CERTIFICATE OF COMPLIANCE			NRCC-LTI-E
Project Name:	Replacement of Existing Residential Center	Report Page:	(Page 4 of 8)
Project Address:	440 East Hill Road	Date Prepared:	10/20/2020

H. INDOOR LIGHTING CONTROLS (Not including PAFs)

*This table includes lighting controls for conditioned and unconditioned spaces. When an control having a * is shown, the notes section of this table provides more detail on how compliance is achieved. The lighting controls section of the Compliance Summary Table on the first page will show "DOES NOT COMPLY" if the notes are left blank.*

Building Level Controls

01	02	03 Field Inspector Pass	03 Field Inspector Fail
Mandatory Demand Response §110.12(c)	Shut-off controls §130.1(c)		
Required 10,000 SF	Whole Building Auto Time Switch	☐	☐

Area Level Controls

04 Area Description	05 Complete Building or Area Category Primary Function Area	06 Area Controls §130.1(a)	07 Multi-Level Controls §130.1(b)	08 Shut-Off Controls §130.1(c)	09 Primary/Sky lit Daylighting §130.1(d)	10 Secondary Daylighting §140.6(d)	11 Interlocked Systems §140.6(a)1	12 Field Inspector Pass	12 Field Inspector Fail

*NOTES: Controls with a * require a note in the space below explaining how compliance is achieved.
EX: Conference 1: Primary/Skylight Daylighting: Exempt because less than 120 watts of general lighting; EXCEPTION 1 to §130.1(d)2*

13
Plan Sheet Showing Daylit Zones:

I. LIGHTING POWER ALLOWANCE: COMPLETE BUILDING OR AREA CATEGORY METHODS

Each area complying using the Complete Building or Area Category Methods per §140.6(b) are included in this table. Column 06 indicates if additional lighting power allowances per §140.6(c) or adjustments per §140.6(a) are being used .

Conditioned Spaces

01 Area Description	02 Complete Building or Area Category Primary Function Area	03 Allowed Density (W/ft²)	04 Area (ft²)	05 Allowed Wattage (Watts)	06 Additional Allowance / Adjustment: Area Category	06 Additional Allowance / Adjustment: PAF
Restroom	Restrooms	0.65	498	323.7	No	No
Elec/Mech/Riser	Electrical Mechancial Telephone Room	0.4	292	116.8	No	No
Office <= 250	Office 250 square feet or less	0.7	106	74.2	No	No
Office >250	Office greater than 250 square feet	0.65	613	398.45	No	No

Registration Number: CA Building Energy Efficiency Standards - 2019 Nonresidential Compliance
Registration Date/Time: Report Version: 2019.0.001 Schema Version: rev 20190401
Registration Provider: EnergySoft Report Generated: 2020-10-20 09:12:20

STATE OF CALIFORNIA
Indoor Lighting
NRCC-LTI-E
CALIFORNIA ENERGY COMMISSION

CERTIFICATE OF COMPLIANCE			NRCC-LTI-E
Project Name:	Replacement of Existing Residential Center	Report Page:	(Page 2 of 8)
Project Address:	440 East Hill Road	Date Prepared:	10/20/2020

C. COMPLIANCE RESULTS

If any cell on this table says "DOES NOT COMPLY" or "COMPLIES with Exceptional Conditions" refer to Table D. for guidance.

Lighting in conditioned and unconditioned spaces must not be combined for compliance per §140.6(b)1	Allowed Lighting Power per §140.6(b) (Watts) 01 Complete Building §140.6(c)1	02 Area Category §140.6(c)2	03 Area Category Additional §140.6(c)2(D) (+)	04 Tailored §140.6(c)3 (+)	=	05 Total Allowed (Watts)	≥	Adjusted Lighting Power per §140.6(a) (Watts) 06 Total Designed (Watts)	07 Adjustments PAF Lighting Control Credits §140.6(a)2 (-)	=	08 Total Adjusted (Watts) *Includes Adjustments	Compliance Results
	[See Table I]	[See Table I]	[See Table J]	[See Table K]				[See Table F]	[See Table P]			05 must be >= 08 §140.6
Conditioned	0	8,942.45	0	0	=	8942.45	≥	8,077.6	0	=	8077.6	COMPLIES
Unconditioned	0	0	0	0	=		≥	0	0	=		
											Controls Compliance (See Table H for Details)	COMPLIES
											Rated Power Reduction Compliance (See Table Q for Details)	

D. EXCEPTIONAL CONDITIONS

This table is auto-filled with uneditable comments because of selections made or data entered in tables throughout the form.

E. ADDITIONAL REMARKS

This table includes remarks made by the permit applicant to the Authority Having Jurisdiction.

F. INDOOR LIGHTING FIXTURE SCHEDULE

This table includes all permanent designed lighting and all portable lighting in offices.

Designed Wattage: Conditioned Spaces

01 Name or Item Tag	02 Complete Luminaire Description	03 Modular (Track) Fixture	04 Small Aperture & Color Change[1]	05 Watts per luminaire[2]	06 How is Wattage determined	07 Total Number of Luminaires	08 Exempt per §140.6(a)3	09 Design Watts	10 Field Inspector Pass	10 Field Inspector Fail
1	1 - 2x4 LED	No	No	31.2	JA8 Lamp	49	No	1,528.8	☐	☐
13	13 - 1x4 LED	No	No	32	JA8 Lamp	5	No	160	☐	☐

Registration Number: CA Building Energy Efficiency Standards - 2019 Nonresidential Compliance
Registration Date/Time: Report Version: 2019.0.001 Schema Version: rev 20190401
Registration Provider: EnergySoft Report Generated: 2020-10-20 09:12:20

STATE OF CALIFORNIA
Indoor Lighting
NRCC-LTI-E
CALIFORNIA ENERGY COMMISSION

CERTIFICATE OF COMPLIANCE			NRCC-LTI-E
Project Name:	Replacement of Existing Residential Center	Report Page:	(Page 8 of 8)
Project Address:	440 East Hill Road	Date Prepared:	10/20/2020

DOCUMENTATION AUTHOR'S DECLARATION STATEMENT

Documentation Author Name: Ray Swartz	Documentation Author Signature:
Company: tk1sc	Signature Date: 2020-10-20
Address: 11870 Pierce Street, Suite 160	CEA/ HERS Certification Identification (if applicable):
City/State/Zip: Riverside CA 92505	Phone: 951-299-4160

RESPONSIBLE PERSON'S DECLARATION STATEMENT

I certify the following under penalty of perjury, under the laws of the State of California:

1. The information provided on this Certificate of Compliance is true and correct.
2. I am eligible under Division 3 of the Business and Professions Code to accept responsibility for the building design or system design identified on this Certificate of Compliance (responsible designer)
3. The energy features and performance specifications, materials, components, and manufactured devices for the building design or system design identified on this Certificate of Compliance conform to the requirements of Title 24, Part 1 and Part 6 of the California Code of Regulations.
4. The building design features or system design features identified on this Certificate of Compliance are consistent with the information provided on other applicable compliance documents, worksheets, calculations, plans and specifications submitted to the enforcement agency for approval with this building permit application.
5. I will ensure that a completed signed copy of this Certificate of Compliance shall be made available with the building permit(s) issued for the building, and made available to the enforcement agency for all applicable inspections. I understand that a completed signed copy of this Certificate of Compliance is required to be included with the documentation the builder provides to the building owner at occupancy.

Responsible Designer Name: Ray Swartz	Responsible Designer Signature:
Company: tk1sc	Date Signed: 2020-10-20
Address: 11870 Pierce Street, Suite 160	License: E15610
City/State/Zip: Riverside CA 92505	Phone: 951-299-4160

Registration Number: CA Building Energy Efficiency Standards - 2019 Nonresidential Compliance
Registration Date/Time: Report Version: 2019.0.001 Schema Version: rev 20190401
Registration Provider: EnergySoft Report Generated: 2020-10-20 09:12:20

STATE OF CALIFORNIA
Indoor Lighting
NRCC-LTI-E
CALIFORNIA ENERGY COMMISSION

CERTIFICATE OF COMPLIANCE			NRCC-LTI-E
Project Name:	Replacement of Existing Residential Center	Report Page:	(Page 5 of 8)
Project Address:	440 East Hill Road	Date Prepared:	10/20/2020

I. LIGHTING POWER ALLOWANCE: COMPLETE BUILDING OR AREA CATEGORY METHODS

Corridor	Corridor Area	0.6	1,062	637.2	No	No
Storage/Other	All Other Space Types	0.4	1,288	515.2	No	No
Lockers	Locker Dressing Room	0.45	633	284.85	No	No
Court	Sports Arena Class IV Facility	0.75	5,056	3,792	No	No
Dining	Cafeteria/Fastfood	0.4	3,839	1,535.6	No	No
Kitchen	Kitchen/ Food Preparation Area	0.95	1,331	1,264.45	No	No
			TOTALS:	14,718	8,942.45	See Tables J, or P for detail

J. ADDITIONAL ALLOWANCE: AREA CATEGORY METHOD QUALIFYING LIGHTING SYSTEM

This section does not apply to this project.

K. TAILORED METHOD GENERAL LIGHTING POWER ALLOWANCE

This section does not apply to this project.

L. ADDITIONAL LIGHTING ALLOWANCE: TAILORED WALL DISPLAY

This section does not apply to this project.

M. ADDITIONAL LIGHTING ALLOWANCE: TAILORED FLOOR AND TASK LIGHTING

This section does not apply to this project.

N. ADDITIONAL LIGHTING ALLOWANCE: TAILORED ORNAMENTAL/SPECIAL EFFECTS

This section does not apply to this project.

O. ADDITIONAL LIGHTING ALLOWANCE: TAILORED VERY VALUABLE MERCHANDISE

This section does not apply to this project.

P.POWER ADJUSTMENT: LIGHTING CONTROL CREDIT (POWER ADJUSTMENT FACTOR (PAF))

This section does not apply to this project.

Registration Number: CA Building Energy Efficiency Standards - 2019 Nonresidential Compliance
Registration Date/Time: Report Version: 2019.0.001 Schema Version: rev 20190401
Registration Provider: EnergySoft Report Generated: 2020-10-20 09:12:20

TITLE 24 GENERAL NOTE

CONTRACTOR SHALL BE RESPONSIBLE FOR ALL WORK ASSOCIATED WITH FINAL INSPECTION AND APPLICABLE ACCEPTANCE REQUIREMENT PROCEDURES. INCLUDE ALL COSTS IN THE BASE BID. THIS SHALL INCLUDE, BUT NOT BE LIMITED TO, CONSTRUCTION INSPECTION, MEASUREMENTS, MONITORING, FUNCTIONAL TESTING, CALIBRATING, ETC. CONTRACTOR SHALL ASSUME THE ROLE OF "FIELD TECHNICIAN" AND "RESPONSIBLE PERSON" AS DEFINED IN STATE OF CALIFORNIA 2019 BUILDING ENERGY EFFICIENCY STANDARDS NONRESIDENTIAL COMPLIANCE MANUAL SECTION 13.2.2.

SEE STATE OF CALIFORNIA 2019 BUILDING ENERGY EFFICIENCY STANDARDS SECTIONS 10-103(a)3A AND 10-103(a)3B AND SECTION 130.4 FOR MORE INFORMATION.

SEE STATE OF CALIFORNIA 2019 BUILDING ENERGY EFFICIENCY STANDARDS NONRESIDENTIAL COMPLIANCE MANUAL CHAPTER 13 FOR MORE DETAILED REQUIREMENTS / INFORMATION.

SEE STATE OF CALIFORNIA 2019 BUILDING ENERGY EFFICIENCY STANDARDS RESIDENTIAL COMPLIANCE MANUAL CHAPTER 2 FOR MORE DETAILED REQUIREMENTS / INFORMATION.

PROVIDE COMPLETED INSTALLATION CERTIFICATE(S) AND CERTIFICATE(S) OF ACCEPTANCE AS REQUIRED TO THE SATISFACTION OF THE ENFORCEMENT AGENCY.

TITLE 24 PROCEDURES FOR TESTING AND ADJUSTING

CONTRACTOR SHALL BE RESPONSIBLE FOR ALL WORK ASSOCIATED WITH FINAL INSPECTION AND APPLICABLE ACCEPTANCE REQUIREMENT PROCEDURES. INCLUDE ALL COSTS IN THE BASE BID. THIS SHALL INCLUDE, BUT NOT BE LIMITED TO, CONSTRUCTION INSPECTION, MEASUREMENTS, MONITORING, FUNCTIONAL TESTING, CALIBRATING, ETC. CONTRACTOR SHALL ASSUME THE ROLE OF "FIELD TECHNICIAN" AND "RESPONSIBLE PERSON" AS DEFINED IN STATE OF CALIFORNIA 2019 BUILDING ENERGY EFFICIENCY STANDARDS NONRESIDENTIAL COMPLIANCE MANUAL SECTION 13.2.2.

LIGHTING CONTROL ACCEPTANCE TESTING AND ADJUSTING PROCEDURES – REFER TO NRCA-LTI-02-A DOCUMENTS.

AUTOMATIC DAYLIGHT CONTROL ACCEPTANCE TESTING AND ADJUSTING PROCEDURES – REFER TO NRCA-LTI-03-A DOCUMENTS.

DEMAND RESPONSE LIGHTING CONTROL ACCEPTANCE TESTING AND ADJUSTING PROCEDURES – REFER TO NRCA-LTI-04-A DOCUMENTS.

INSTITUTIONAL TUNING PAF ACCEPTANCE TESTING AND ADJUSTING PROCEDURES – REFER TO NRCA-LTI-05-A DOCUMENTS.

OUTDOOR LIGHTING CONTROL ACCEPTANCE TESTING AND ADJUSTING PROCEDURES – REFER TO NRCA-LTO-02-A DOCUMENTS.

ALL LIGHTING CONTROLS TESTING AND ADJUSTING DOCUMENTS NOTED ABOVE ARE AVAILABLE FROM THE CALIFORNIA ENERGY COMMISSION WEB SITE AT:

https://ww2.energy.ca.gov/title24/2019standards/2019_compliance_documents/Nonresidential_Documents/NRCA/

IDENTIFICATION STAMP
DIV. OF THE STATE ARCHITECT
APP: 02-118630 INC:
REVIEWED FOR
SS ☐ FLS ☐ ACS ☑
DATE: 04/13/2021

OFFICE OF THE STATE FIRE MARSHAL
APPROVED FIRE AND PANIC ONLY
Approval of this plan does not authorize or approve any omission or deviation from applicable regulations. Final approval is subject to field inspection. One set of approved plans shall be available on the project site at all times.
PERMIT NO.: 28-N-3332-CP
REVIEWED BY: LEO CATALLO, OSFM
DATE: 4/ /2021

DGS GENERAL SERVICES
Department of General Services
State of California
Real Estate Services Division
Project Management & Development Branch
707 Third Street, Suite 4-105
West Sacramento, California 95605

NICHOLS MELBURG & ROSSETTO ARCHITECTS + ENGINEERS
300 Knollcrest Drive
Redding, CA. 96002
(530) 222-3300 (530) 222-3538 FAX
http://www.nmrdesign.com

Copyright © 2019
All ideas, designs, arrangements and plans indicated or represented by this drawing are owned by, and the property of, NICHOLS, MELBURG and ROSSETTO and were created, evolved and developed for use on, and in connection with, the specified project. None of such ideas, designs, arrangements or plans shall be used by, or disclosed to, any person, firm or corporation for any purpose whatsoever without the written permission of NICHOLS, MELBURG and ROSSETTO.

LICENSE STAMPS

REGISTERED PROFESSIONAL ENGINEER RAYMOND W. SWARTZ No. E15610 12/31/2021 STATE OF CALIFORNIA Date Signed: 3/25/2021

CONSULTANT

tklsc COLLABORATIVE
11870 Pierce Street, Suite 160
Riverside, California 92505
951.299.4160 www.tk1sc.com
Project Leader - Jerry Leonhardt
Electrical Lead - Reid Cordry
tk1sc Job #:2019-0228A

DRAWING STATUS
CONSTRUCTION DOCUMENTS

ISSUE

No.	Date	Description
1	10/20/2020	INITIAL PLAN REVIEW
2	01/22/2021	AGENCY RESUBMITTAL
3	03/22/2021	AGENCY RESUBMITTAL

If drawing is not 30" x 42" it is a reduced print

PROJECT
RESIDENTIAL CENTER, UKIAH: REPLACEMENT OF EXISTING RESIDENTIAL CENTER
440 EAST HILL ROAD
WILLITS, CALIFORNIA 95490
MENDOCINO COUNTY
CALIFORNIA CONSERVATION CORP

Supervisor	Designed	Drawn
		Author

DSA Application No.
02-118630

SHEET TITLE
TITLE 24 MULTI-PURPOSE BUILDING

DGS Project Number: 0000000000001826
NMR Project Number: 18-6456

Reference North: NORTH
Sheet Scale:
Sheet Number: E505M

ISSUE DATE
July 9, 2021

Plot Date: 3/22/2021 9:00:08 AM
File Name: BIM 360:/CCC Willits Residential Center/E_CCC Willits_COMMON_2019-0228A.rvt

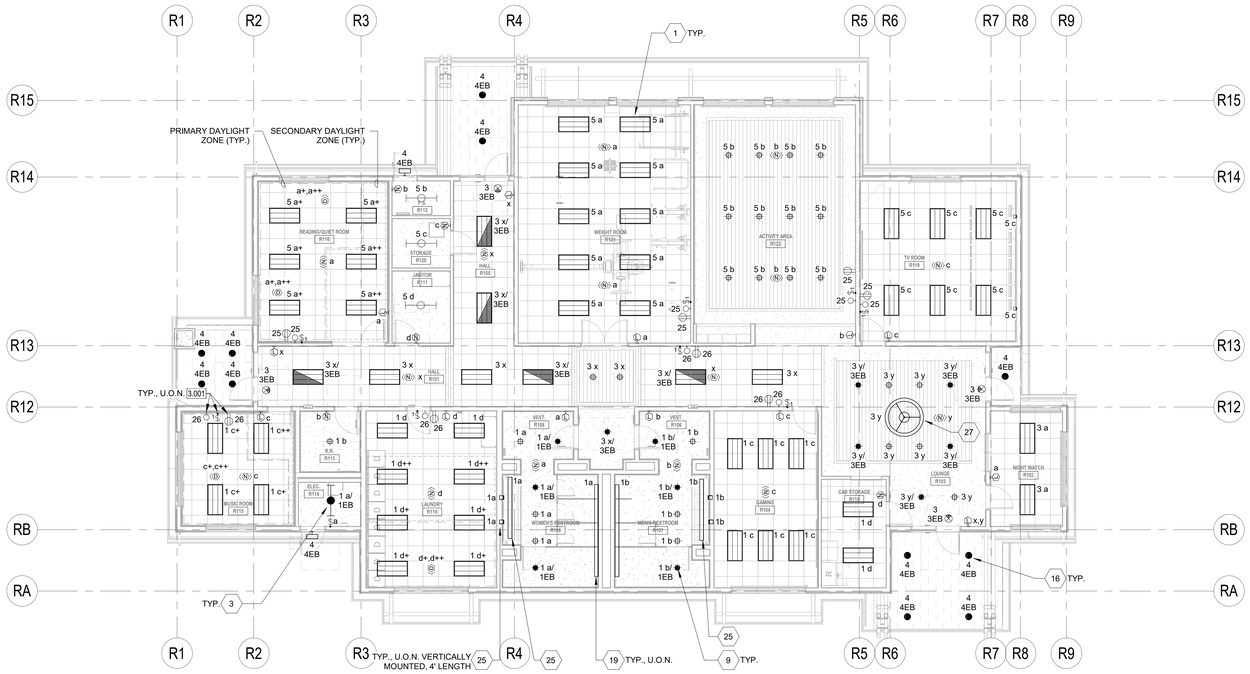

KEYNOTES

3.001 RECEPTACLE, SWITCH, AND LIGHT FIXTURE MOUNTED ABOVE CEILING. PROVIDE A KEYLESS PLASTIC LAMP HOLDER LEVITON #R50-08829-CW4, OR EQUAL, MOUNTED ON A JUNCTION BOX WITH ONE LED A19 9W LAMP. COORDINATE AND VERIFY EXACT MOUNTING LOCATION IN FIELD WITH MECHANICAL EQUIPMENT INSTALLER PRIOR TO ROUGH IN.

LIGHTING PLAN GENERAL NOTES:

1. REFER TO ARCHITECTURAL PLANS FOR EXACT LOCATION AND ELEVATION OF ALL LIGHTING FIXTURES AND ALL DEVICES. ALL WALL-MOUNTED DEVICE HEIGHTS SHALL BE VERIFIED WITH THE ARCHITECT PRIOR TO ROUGH-IN.
2. VERIFY EXACT CEILING CONSTRUCTION WITH ARCHITECTURAL REFLECTED CEILING PLAN AND PROVIDE LIGHTING FIXTURES WITH ALL NECESSARY MOUNTING HARDWARE.
3. ALL RECESSED FIXTURES SHALL BE PROVIDED WITH ALL REQUIRED STRUCTURAL SUPPORTS AS REQUIRED BY THE CURRENTLY ADOPTED ISSUE OF THE IBC, OR CBC WHERE ADOPTED, IN ADDITION TO ANY LOCAL CODES
4. ALL COVE MOUNTED FIXTURES SHALL EXTEND THE FULL LENGTH OF THE COVE. CONTRACTOR TO FIELD MEASURE COVE LENGTH AND ORDER QUANTITY OF FIXTURES AS REQUIRED.
5. ALL DIMMING BRANCH CIRCUITS SHALL BE PROVIDED WITH A DEDICATED NEUTRAL CONDUCTOR FOR EACH ZONE/CHANNEL.
6. ALL FLUORESCENT DIMMING ZONES/CHANNELS SHALL BE PROVIDED WITH 3 LINE VOLTAGE CONDUCTORS (NEUTRAL, DIMMED HOT, SWITCHED HOT) OR 2 LINE VOLTAGE CONDUCTORS/2 CONTROL CONDUCTORS AS REQUIRED BY THE CONTROL/BALLAST TYPE.
7. ALL EMERGENCY BATTERY PACK FIXTURES SHALL BE PROVIDED WITH A CONSTANT HOT CONNECTION TO THE CHARGING LEAD. SEE GENERAL LIGHTING FIXTURE SCHEDULE NOTES FOR MORE INFORMATION.
8. REFER TO ARCHITECTURAL REFLECTED CEILING PLANS FOR EXIT SIGN CHEVRONS AND NUMBER OF FACES PER EXIT SIGN. ANY DISCREPANCIES BETWEEN EXIT SIGNS SHOWN ON THE ELECTRICAL AND ARCHITECTURAL PLANS SHALL BE BROUGHT TO THE ATTENTION OF THE ARCHITECT PRIOR TO ORDERING EXIT SIGNS.
9. WHEN EXPOSED CEILINGS OR OPEN GRID CONDITIONS OCCUR, THE CONTRACTOR WILL NEED TO PROVIDE THE FOLLOWING ITEMS:

   - ALL BRANCH CIRCUITS SHALL BE IN EMT.

   - ALL BRANCH CIRCUITS SHALL BE ROUTED, NEATLY TRAINED, AND IN PARALLEL TO STRUCTURES OR DUCT WORK. THE TERM "TRAINED" MEANS ALL PARALLEL CONDUITS SHALL MAINTAIN THE SAME SPATIAL RELATIONSHIP WITH EACH OTHER FOR ENTIRE RUN TO INCLUDE RADIUS BENDS AND SWEEPS.

   - VISUALLY OBJECTIONABLE BRANCH CIRCUITS WILL BE REROUTED AT THE REQUEST OF THE ARCHITECT AT NO ADDITIONAL COST.
10. ALL LED REMOTE INDICATORS FOR DUCT DETECTORS AND FIRE/SMOKE DAMPERS REQUIRED BY THE SFM SHALL BE LOCATED IN CEILINGS IN COORDINATION WITH ARCHITECT PRIOR TO ANY ROUGH-IN.
11. RECESSED FIXTURES LOCATED IN A FIRE-RATED CEILING OR WALL SHALL BE PROVIDED WITH A 5-SIDED RATED ENCLOSURE SO CONSTRUCTED AS TO ALLOW CODE AND MANUFACTURER-REQUIRED CLEARANCES BETWEEN THE FIXTURE AND THE ENCLOSURE.
12. PROVIDE REDUNDANT GROUND PATH IN ALL BRANCH CIRCUITS SERVING PATIENT CARE AREAS CONSISTING OF A SEPARATE, INSULATED EQUIPMENT GROUNDING CONDUCTOR PER NEC, OR CEC WHERE ADOPTED, ART 517.13.
13. PROVIDE ADDITIONAL J-BOX NEAR PANEL FOR MULTIPLE HOMERUN CIRCUITRY.
14. UNLESS SPECIFICALLY SHOWN AS (E), (R), (ER), (D), EXISTING OR NON-BOLD, ALL ELECTRICAL DEVICES SHOWN ARE NEW.
15. REFER TO GENERAL POWER PLAN NOTES AND COMMUNICATIONS PATHWAYS GENERAL NOTES FOR ADDITIONAL REQUIREMENTS WHEN POWER AND/OR DATA DEVICES ARE SHOWN ON THIS PLAN.
16. CONTRACTOR SHALL PROVIDE CONDUIT AND WIRE FOR ALL DEVICES TO PANELBOARD(S) INDICATED ON PLANS FOR A COMPLETE AND OPERABLE SYSTEM.
17. CONTRACTOR SHALL PROVIDE MINIMUM 2#12, 1#12G IN ½" CONDUIT UNLESS OTHERWISE NOTED. REFERENCE WIRE SIZE TABLE CHART ABOVE. WHERE REQUIRED, CONDUIT AND WIRE SHALL BE UPSIZED TO MEET THE REQUIREMENT OF THE DEVICE BEING SERVED BY THE BRANCH CIRCUIT. WHERE CONDUIT AND WIRING IS INDICATED AT THE HOME RUN, WIRING AND CONDUIT SHALL CONTINUE AT THAT SIZE FOR THE ENTIRE LENGTH OF THE CIRCUIT.
18. CONTRACTOR SHALL FURNISH ADDITIONAL SWITCHLEGS OR HOT WIRES AS REQUIRED TO MEET THE CONTROL INTENT OF THE DOCUMENTS AND AS REQUIRED BY CODE (I.E. EMERGENCY LIGHTING AND SWITCHED RECEPTACLES).
19. MULTIPLE CIRCUITS MAY BE USED IN A SINGLE RACEWAY. NO MORE THAN (3) DEDICATED CIRCUITS OR (4) CURRENT CARRYING CONDUCTORS SHALL BE INSTALLED IN ANY RACEWAY UNLESS OTHERWISE NOTED. WHERE A COMMON GROUNDED CONDUCTOR IS USED FOR MULTIPLE INDIVIDUAL BRANCH CIRCUITS, PER SECTIONS CEC 200.4, 250.122, 310.15(B)(2), CONDUIT SIZE SHALL BE INCREASED AS REQUIRED FOR THE CONDUCTORS INCLUDING TEMPERATURE DERATING PER CEC TABLE C1.
20. FURNISH AND INSTALL JUNCTION BOXES AS REQUIRED TO MEET MAXIMUM BEND REQUIREMENTS FOR PULLING WIRES PER CEC 358.26. JUNCTION BOXES SHALL BE SIZED AS REQUIRED PER CEC 314.28 UNLESS OTHERWISE NOTED.

RECREATION BUILDING LIGHTING PLAN

NORTH

SCALE: 1/8" = 1'-0"

VOLTAGE DROP WORKSHEET: REFERENCE ONLY

1. ALL BRANCH CIRCUITS ARE DESIGNED TO LIMIT VOLTAGE DROP 3% OR LESS USING THE FOLLOWING CRITERIA:

208 VOLT, 1 PHASE LOAD:

LOAD (VA)	DISTANCE	CU CONDUCTOR SIZE
0-1000 VA (500 PER PHASE) 0-4.8 AMPS	0-225 FT	#12
	226-360 FT	#10
	361-572 FT	#8
1001-2000 VA (1,000 PER PHASE) 4.8-9.6 AMPS	0-151 FT	#12
	152-240 FT	#10
	241-380 FT	#8
	381-604 FT	#6
2001-3,328 VA (1,664 PER PHASE) 9.6-16 AMPS	0-78 FT	#12
	79-125 FT	#10
	126-198 FT	#8
3329-4,992 VA (2,496 PER PHASE) 16-24 AMPS	0-52 FT	#12
	53-83 FT	#10
	84-132 FT	#8

120 VOLT, 1 PHASE LOAD:

LOAD (VA)	DISTANCE	CU CONDUCTOR SIZE
0-1000 VA 0-8 AMPS	0-130 FT	#12
	131-205 FT	#10
	205-330 FT	#8
1001-1500 VA 8-12.5 AMPS	0-87 FT	#12
	88-138 FT	#10
	139-219 FT	#8
	220-350 FT	#6
1501-1920 VA 12.5-16 AMPS	0-68 FT	#12
	69-108 FT	#10
	109-172 FT	#8
	173-273 FT	#6
1921-2880 VA 16-24 AMPS	0-72 FT	#10
	73-114 FT	#8
	115-182 FT	#6

ANY 3 PHASE LOADS GREATER THAN 30 AMPS ARE SHOWN ON THE FEEDER SCHEDULE OR MOTORIZED EQUIPMENT SCHEDULE WITH ASSOCIATED VOLTAGE DROP LIMITED TO 2% OR LESS.

WALL TYPES LEGEND

SEE SHEET G121 FOR ASSEMBLY TYPES

EXTERIOR

	2 x 6 WOOD STUD WALL - NON RATED	0-W1-6 * ● #
	2 x 12 WOOD STUD WALL - NON RATED	0-W1-12 * ● #

INTERIOR

	2 x 4 WOOD STUD WALL - NON RATED	0-W2-4 * ● #
	2 x 6 WOOD STUD WALL - NON RATED	0-W2-6 * ● #
	2 x 8 WOOD STUD WALL - NON RATED	0-W2-8 * ● #
	2 x 12 WOOD STUD WALL - NON RATED	0-W2-12 * ● #
	2 x 4 WOOD STUD WALL - ACOUSTIC	0-W5-4 * ● #
	2 x 6 WOOD STUD WALL - ACOUSTIC	0-W5-6 * ● #
	2 X 4 WOOD STUD WALL - 1-HR FIRE PARTITION W/ PROTECTED OPENINGS	1-W3-4 * ● #
	2 X 6 WOOD STUD WALL - 1-HR FIRE PARTITION W/ PROTECTED OPENINGS	1-W3-6 * ● #

WALL TYPE NOTES

PARTITION SYMBOL

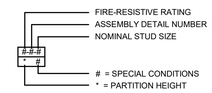

IDENTIFICATION STAMP
DIV. OF THE STATE ARCHITECT
APP: 02-118630 INC:
REVIEWED FOR
SS ☐ FLS ☐ ACS ☑
DATE: 04/13/2021

OFFICE OF THE STATE FIRE MARSHAL
APPROVED FIRE AND PANIC ONLY
Approval of this plan does not authorize or approve any omission or deviation from applicable regulations. Final approval is subject to field inspection. One set of approved plans shall be available on the project site at all times.
PERMIT NO: 28 N 2332-CP
REVIEWED BY: LEO CATAYLO, OSFM
DATE: 4/ /2021

GENERAL SERVICES
Department of General Services
State of California
Real Estate Services Division
Project Management & Development Branch
707 Third Street, Suite 4-105
West Sacramento, California 95605

NICHOLS MELBURG & ROSSETTO
ARCHITECTS + ENGINEERS
300 Knollcrest Drive
Redding, CA. 96002
(530) 222-3300 (530) 222-3538 FAX
http://www.nmrdesign.com

Copyright © 2019
All ideas, designs, arrangements and plans indicated or represented by this drawing are owned by, and the property of, NICHOLS, MELBURG and ROSSETTO and were created, evolved and developed for use on, and in connection with, the specified project. None of such ideas, designs, arrangements or plans shall be used by, or disclosed to, any person, firm or corporation for any purpose whatsoever without the written permission of NICHOLS, MELBURG and ROSSETTO.

LICENSE STAMPS

REGISTERED PROFESSIONAL ENGINEER RAYMOND W. SWIFT No. E15610 12/31/2021 ELECTRICAL STATE OF CALIFORNIA
Signed: 3/25/2021

CONSULTANT
tk1sc COLLABORATIVE
11870 Pierce Street, Suite 160
Riverside, California 92505
951.299.4160 www.tk1sc.com
Project Leader - Jerry Leonhardt
Electrical Lead - Reid Cordry
tk1sc Job #:2019-0228A

DRAWING STATUS
CONSTRUCTION DOCUMENTS

ISSUE

No.	Date	Description
1	10/20/2020	INITIAL PLAN REVIEW
2	01/22/2021	AGENCY RESUBMITTAL
3	03/22/2021	AGENCY RESUBMITTAL

If drawing is not 30" x 42" it is a reduced print

PROJECT
RESIDENTIAL CENTER, UKIAH: REPLACEMENT OF EXISTING RESIDENTIAL CENTER
440 EAST HILL ROAD
WILLITS, CALIFORNIA 95490
MENDOCINO COUNTY
CALIFORNIA CONSERVATION CORP

Supervisor	Designed	Drawn
		Author

DSA Application No.
XX-XXXXXX

SHEET TITLE
RECREATION BUILDING LIGHTING PLAN

DGS Project Number	NMR Project Number
XXXXX	18-6456

Reference North: NORTH
Sheet Scale: As indicated
Sheet Number: E101R

ISSUE DATE
July 9, 2021

Plot Date: 3/22/2021 9:23:44 AM
File Name: BIM 360://CCC Willits Residential Center/E_CCC Willits_REC_2019-0228A.rvt

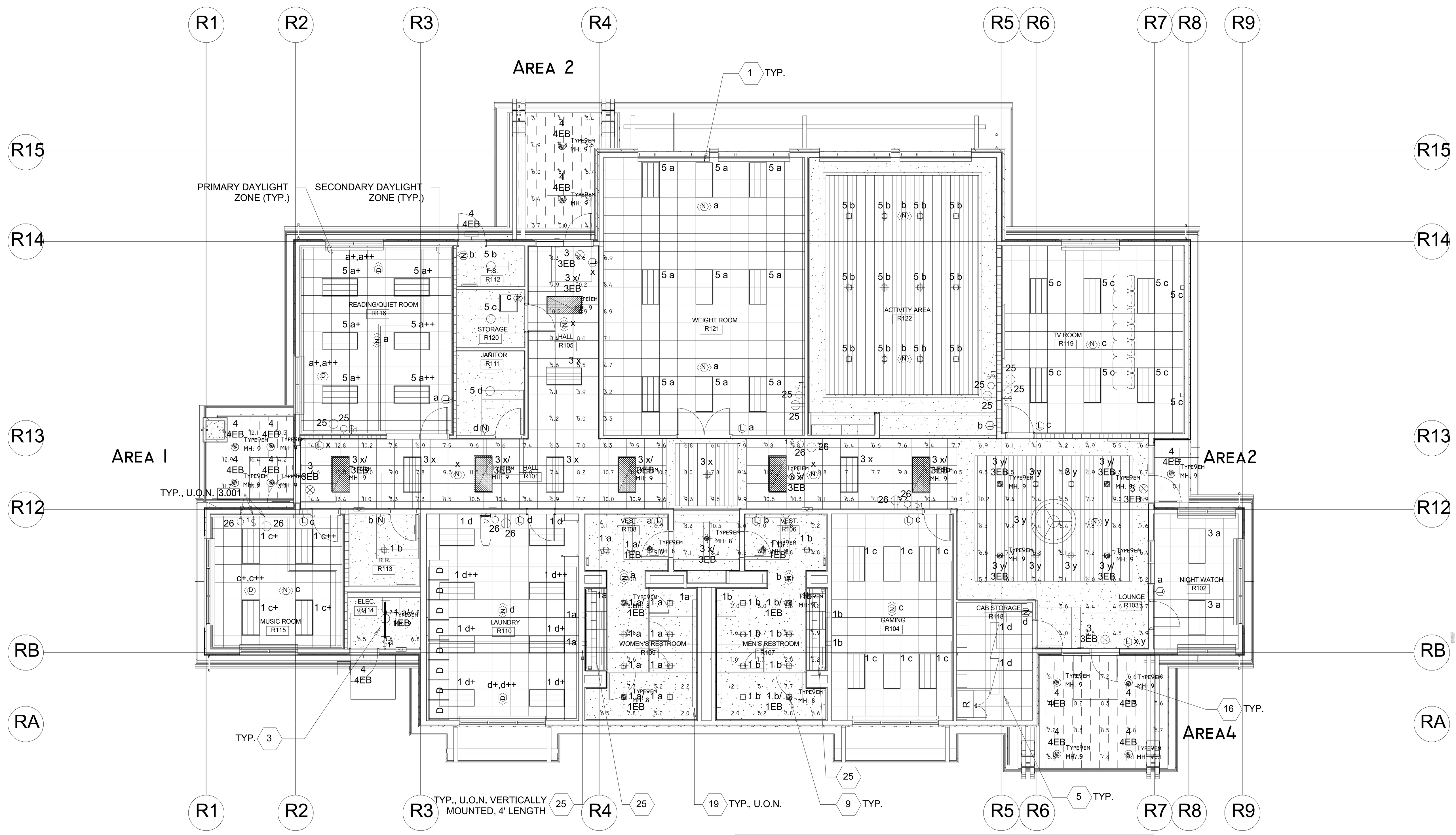

Calculation Summary

Label	CalcType	Units	Avg	Max	Min	Avg/Min	Max/Min
Area1	Illuminance	Fc	12.80	16.4	9.4	1.36	1.74
Area2	Illuminance	Fc	4.95	5.1	4.8	1.03	1.06
Area3	Illuminance	Fc	5.36	8.1	3.1	1.73	2.61
Area4	Illuminance	Fc	7.02	8.5	4.8	1.46	1.77
Elec R114_Floor	Illuminance	Fc	7.37	8.7	6.5	1.13	1.34
Hall R101_Floor	Illuminance	Fc	8.08	16.6	3.2	2.53	5.19
Mens R107_Floor	Illuminance	Fc	5.07	10.2	1.0	5.07	10.20
Womens R109_Floor	Illuminance	Fc	6.03	10.1	2.0	3.02	5.05

Luminaire Schedule

Symbol	Qty	Label	Arrangement	Description	BUG Rating
	6	Type1em	SINGLE	Cooper Metalux 24RLN-LD5-42-UNV-L835-CDI-U-EL14	B2-U0-G1
	22	Type9em	SINGLE	Cooper Halo Commercial HC610D010-HM612835-61WDWF	B1-U0-G0
	1	Type3em	SINGLE	Cooper Metalux 4SNLED-LD5-22SL-LN-UNV-L835-CDI-U-EL7	B1-U3-G1

RECEREATION BUILDING EMERGENCY LIGHTING PHOTOMETRIC PLAN

NORTH

SCALE: 1/8" = 1'-0"

IDENTIFICATION STAMP
DIV. OF THE STATE ARCHITECT
APP: 02-118630 INC:
REVIEWED FOR
SS ☐ FLS ☐ ACS ☑
DATE: 04/13/2021

OFFICE OF THE STATE FIRE MARSHAL
APPROVED FIRE AND PANIC ONLY
Approval of this plan does not authorize or approve any omission or deviation from applicable regulations. Final approval is subject to field inspection. One set of approved plans shall be available on the project site at all times.
PERMIT NO. 20-N-2332-CP
REVIEWED BY LEO CATAYLO, OSFM
DATE: 4/1/2021

DGS
GENERAL SERVICES
Department of General Services
State of California
Real Estate Services Division
Project Management & Development Branch
707 Third Street, Suite 4-105
West Sacramento, California 95605

NM&R
NICHOLS MELBURG & ROSSETTO
ARCHITECTS + ENGINEERS
300 Knollcrest Drive
Redding, CA. 96002
(530) 222-3300 (530) 222-3538 FAX
http://www.nmrdesign.com

Copyright © 2019
All ideas, designs, arrangements and plans indicated or represented by this drawing are owned by, and the property of, NICHOLS, MELBURG and ROSSETTO and were created, evolved and developed for use on, and in conjunction with, the specified project. None of such ideas, designs, arrangements or plans shall be used by, or disclosed to any person, firm or corporation for any purpose whatsoever without the written permission of NICHOLS, MELBURG and ROSSETTO.

LICENSE STAMPS
REGISTERED PROFESSIONAL ENGINEER
RAYMOND W. SWARTZ
No. E15610
Exp. 12/31/2021
ELECTRICAL
STATE OF CALIFORNIA
Date Signed 3/25/2021

CONSULTANT
tk1sc
COLLABORATIVE
11870 Pierce Street, Suite 160
Riverside, California 92505
951.299.4160 www.tk1sc.com
Project Leader - Jerry Leonhardt
Electrical Lead - Reid Cordry
tk1sc Job #:2019-0228A

DRAWING STATUS
CONSTRUCTION DOCUMENTS

ISSUE

No.	Date	Description
1	10/20/2020	INITIAL PLAN REVIEW
2	01/22/2021	AGENCY RESUBMITTAL
3	03/22/2021	AGENCY RESUBMITTAL

If drawing is not 30" x 42" it is a reduced print

PROJECT
RESIDENTIAL CENTER, UKIAH: REPLACEMENT OF EXISTING RESIDENTIAL CENTER
440 EAST HILL ROAD
WILLITS, CALIFORNIA 95490
MENDOCINO COUNTY
CALIFORNIA CONSERVATION CORP

Supervisor	Designed	Drawn
		Author

DSA Application No.
XX-XXXXXX

SHEET TITLE
RECREATION BUILDING EMERGENCY LIGHTING PHOTOMETRIC PLAN

DGS Project Number XXXXX
NMR Project Number 18-6456

Reference North
Sheet Scale 1/8" = 1'-0"
Sheet Number E102R

ISSUE DATE July 9, 2021

Plot Date: 3/22/2021 9:25:46 AM
File Name: BIM 360://CCC Willits Residential Center/E_CCC Willits_REC_2019-0228A.rvt

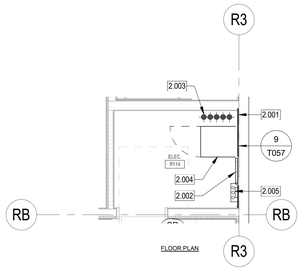

FLOOR PLAN

2 BLDG R - ENLARGED IDF PLANS R114

SCALE: 1/4" = 1'-0"

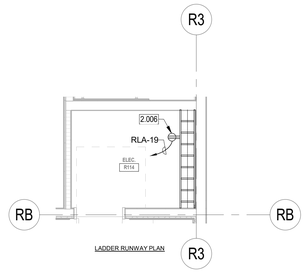

LADDER RUNWAY PLAN

3 BLDG R - ENLARGED IDF LADDER RUNWAY

SCALE: 1/4" = 1'-0"

KEYNOTES

2.001 PLYWOOD BACKBOARD AND TELECOMMUNICATIONS BUSBAR BY E.C. SCS CONTRACTOR SHALL INSTALL #6 WITH GREEN INSULATION TO EACH DATA EQUIPMENT RACK/CABINET, OVERHEAD LADDER TRAY/LADDER RACK, TELECOMMUNICATIONS CONDUITS, TELECOMMUNICATIONS CABLE TRAY(S), ANTI STATIC TILE GROUNDING POINTS ETC. AS REQUIRED. CONNECTIONS SHALL BE MADE WITH 2 HOLE COMPRESSION CONNECTORS. ALL CONNECTIONS SHALL BE BARE METAL TO BARE METAL USING APPROPRIATE ANTIOXIDANT COMPOUND.

2.002 WALL FIELD FOR CAMPUS COPPER BACKBONE CABLE

2.003 4" UNDERGROUND CONDUIT FOR CAMPUS BACKBONE CABLE

2.004 WALL MOUNT CABINET, (CPI PN#12419-736, CPI PN#40975-001, CPI PN#40973-001) ON EXISTING WALL BOARD. SCS CONTRACTOR TO VERIFY PROPER SPACE AND CLEARANCE BEFORE INSTALLATION.

2.005 ANSI-J-STD 607A COMPLIANT U.L.-LISTED TELECOMMUNICATIONS MAIN GROUND BUSBAR (TMGB) CHATSWORTH #40153-020 OR EQUAL BY HARGER. MOUNT 12"A.F.F. PROVIDE 1/8" BRASS ENGRAVED NAMEPLATE WITH ABBREVIATION "T.M.G.B." AND ATTACH TO BUS BAR. PROVIDE #6 GROUND CONDUCTOR WITH GREEN INSULATION TO EACH DATA EQUIPMENT RACK/CABINET, OVERHEAD LADDER TRAY/LADDER RACK, ETC. AS REQUIRED. CONNECTIONS SHALL BE MADE WITH 2 HOLE COMPRESSION CONNECTORS. CONNECTIONS SHALL BE BARE METAL TO BARE METAL USING APPROPRIATE ANTIOXIDANT COMPOUND. PROVIDE ALL OTHER GROUNDING REQUIREMENTS AS DETAILED IN THE PATHWAYS & GROUNDING RISER DIAGRAM SHEET T4.07. ELECTRICAL CONTRACTOR SHALL PROVIDE 1/2"C. WITH #6AWG WITH GREEN INSULATION FROM TMGB TO GROUND BUSBAR LOCATED INSIDE MPOE ROOM ELECTRICAL PANEL. ELECTRICAL CONTRACTOR SHALL PROVIDE TELECOMMUNICATIONS BONDING CONDUCTOR (TBC) CONSISTING OF (1) 1"C., W/ #1AWG (U.O.N.) WITH GREEN INSULATION CONNECTING MAIN BUILDING GROUND BUS BAR LOCATED IN MAIN ELECTRICAL ROOM TO THE TELECOMMUNICATIONS MAIN GROUNDING BUSBAR (TMGB) UTILIZING 2-HOLE COMPRESSION CONNECTORS. LABEL EACH END OF TBC WITH A GROUND WARNING TAG (PANDUIT #PT-BGRND OR EQUAL).

2.006 NEMA L6-30R 30A TWIST-LOCK MOUNTED TO LADDER RACK, PROVIDED BY E.C.

2.014 CONNECT COMPLETE TO WATER HEATER AS REQUIRED. PROVIDE CODE SIZED DISCONNECT SWITCH AT THE WATER HEATER AS REQUIRED. COORDINATE LOCATION WITH PLUMBING CONTRACTOR PRIOR TO ROUGH-IN.

2.015 CONNECT CIRCULATION PUMP, TIME CLOCK AND/OR AQUASTAT AS REQUIRED. PROVIDE CODE SIZED DISCONNECT SWITCH AS REQUIRED. SEE PLUMBING PLANS FOR MORE INFORMATION. COORDINATE LOCATION WITH PLUMBING CONTRACTOR PRIOR TO ROUGH-IN.

2.016 PROVIDE CONNECTION TO ELECTRIC HAND DRYERS PER MANUFACTURER'S REQUIREMENTS.

KEYNOTES

2.024 PROVIDE 120V TO TRAP PRIMER AND CONNECT AS REQUIRED. COORDINATE WITH P.C. FOR EXACT LOCATION PRIOR TO ROUGH-IN. REFER TO PLUMBING DRAWINGS FOR MORE INFORMATION.

2.026 ACCESS CONTROL SYSTEM CARD READER WITH CONDUIT AND CABLING, PER SPECIFICATIONS. SEE SHEET T.056 FOR MORE INFORMATION.

2.027 CCTV LOCATION, EXTERIOR MOUNT IOP CAMERA. PROVIDE AND INSTALL FLUSH MOUNTED SINGLE GANG J-BOX WITH 1" WATERPROOF SLEEVE TO THE ACCESSIBLE CEILING SPACE FOR FUTURE EXTERIOR CCTV CAMERA. PROVIDE (1)CAT-6A CABLE TO EQUIPMENT PATCH PANEL IN NEAREST IDF/MDF ROOM. PROVIDE FIRE STOP PER CODE. MINIMUM 1/2" DEEP FIRE STOP PUTTY ON EACH SIDE FOR SOUND ISOLATION FOR FIRE RATED WALL PENETRATIONS. COORDINATE FINAL LOCATION WITH ARCH RCP. SEE SHEET T055 FOR MORE INFORMATION.

2.028 CCTV LOCATION. INTERIOR MOUNT IP CAMERA. PROVIDE AND INSTALL 5S DEEP BOX MOUNTED IN ACCESSIBLE CEILING ABOVE CAMERA WITH CONDUIT TO NEAREST ACCESSIBLE CEILING SPACE OR MDF/IDF. PROVIDE (1) CAT-6A CABLE TO EQUIPMENT PATCH PANEL IN NEAREST IDF/MDF ROOM. COORDINATE FINAL LOCATION WITH ARCH RCP. SEE SHEET T055 FOR MORE INFORMATION.

2.040 CEILING MOUNT AV SPEAKER. SEE SINGLE LINE DIAGRAM SHEET E605 AND SPECIFICATIONS FOR MORE INFORMATION.

2.043 WALL MOUNT AV CONTROL PANEL. SEE SINGLE LINE DIAGRAM SHEET E605 AND SPECIFICATIONS FOR MORE INFORMATION.

2.046 AV CABINET. SEE SINGLE LINE DIAGRAM SHEET E605 AND SPECIFICATIONS FOR MORE INFORMATION.

6.101 PROVIDE AND INSTALL (1) 1-1/4" CONDUIT SLEEVES FOR LOW VOLTAGE SYSTEMS CABLING. SLEEVES TO BE STUBBED OUT IN ACCESSIBLE CEILING SPACES MIN. 6" ABOVE T-BAR AS REQUIRED. PROVIDE FIRE STOP PER CODE. SEE DETAIL 10/E601.

6.102 PROVIDE AND INSTALL (1) 2" CONDUIT SLEEVES FOR LOW VOLTAGE SYSTEMS CABLING. SLEEVES TO BE STUBBED OUT IN ACCESSIBLE CEILING SPACES MIN. 6" ABOVE T-BAR AS REQUIRED. SEE DETAIL 10/E601.

6.104 PROVIDE AND INSTALL (4) 2" CONDUIT SLEEVES FOR LOW VOLTAGE SYSTEMS CABLING. SLEEVES TO BE STUBBED OUT IN ACCESSIBLE CEILING SPACES MIN. 6" ABOVE T-BAR AS REQUIRED. SEE DETAIL 10/E601

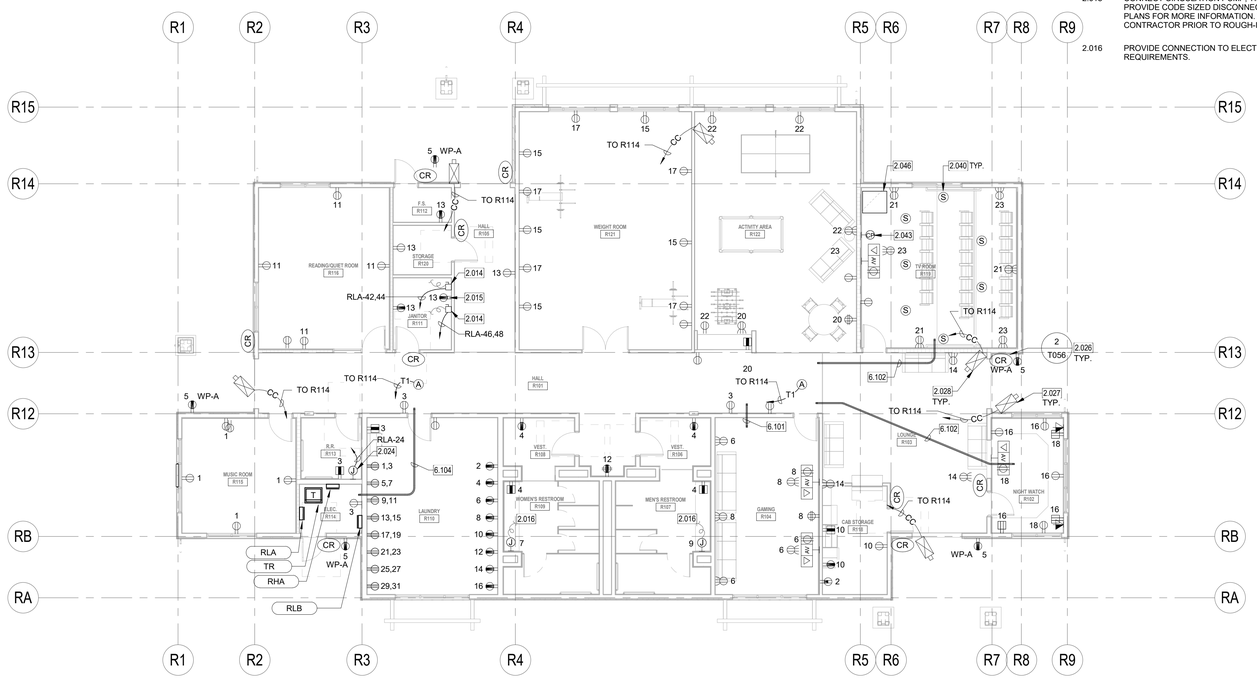

RECREATION BUILDING POWER AND SIGNAL PLAN

NORTH

SCALE: 1/8" = 1'-0"

WALL TYPE NOTES

PARTITION SYMBOL

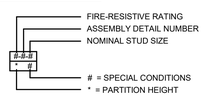

VOLTAGE DROP WORKSHEET: REFERENCE ONLY

1. ALL BRANCH CIRCUITS ARE DESIGNED TO LIMIT VOLTAGE DROP 3% OR LESS USING THE FOLLOWING CRITERIA:

208 VOLT, 1 PHASE LOAD:

LOAD (VA)	DISTANCE	CU CONDUCTOR SIZE
0-1000 VA (500 PER PHASE)	0-225 FT	#12
	226-360 FT	#10
0-4.8 AMPS	361-572 FT	#8
1001-2000 VA (1,000 PER PHASE)	0-151 FT	#12
	152-240 FT	#10
4.8-9.6 AMPS	241-380 FT	#8
	381-604 FT	#6
2001-3,328 VA (1,664 PER PHASE)	0-78 FT	#12
	79-125 FT	#10
9.6-16 AMPS	126-198 FT	#8
3329-4,992 VA (2,496 PER PHASE)	0-52 FT	#12
	53-83 FT	#10
16-24 AMPS	84-132 FT	#8

120 VOLT, 1 PHASE LOAD:

LOAD (VA)	DISTANCE	CU CONDUCTOR SIZE
0-1000 VA	0-130 FT	#12
0-8 AMPS	131-205 FT	#10
	205-330 FT	#8
1001-1500 VA	0-87 FT	#12
8-12.5 AMPS	88-138 FT	#10
	139-219 FT	#8
	220-350 FT	#6
1501-1920 VA	0-68 FT	#12
12.5-16 AMPS	69-108 FT	#10
	109-172 FT	#8
	173-273 FT	#6
1921-2880 VA	0-72 FT	#10
16-24 AMPS	73-114 FT	#8
	115-182 FT	#6

ANY 3 PHASE LOADS GREATER THAN 30 AMPS ARE SHOWN ON THE FEEDER SCHEDULE OR MOTORIZED EQUIPMENT SCHEDULE WITH ASSOCIATED VOLTAGE DROP LIMITED TO 2% OR LESS.

WALL TYPES LEGEND

SEE SHEET G121 FOR ASSEMBLY TYPES

EXTERIOR

	2 x 6 WOOD STUD WALL - NON RATED	0-W1-6 * • #
	2 x 12 WOOD STUD WALL - NON RATED	0-W1-12 * • #

INTERIOR

	2 x 4 WOOD STUD WALL - NON RATED	0-W2-4 * • #
	2 x 6 WOOD STUD WALL - NON RATED	0-W2-6 * • #
	2 x 8 WOOD STUD WALL - NON RATED	0-W2-8 * • #
	2 x 12 WOOD STUD WALL - NON RATED	0-W2-12 * • #
	2 x 4 WOOD STUD WALL - ACOUSTIC	0-W5-4 * • #
	2 x 6 WOOD STUD WALL - ACOUSTIC	0-W5-6 * • #
	2 X 4 WOOD STUD WALL - 1-HR FIRE PARTITION W/ PROTECTED OPENINGS	1-W3-4 * • #
	2 X 6 WOOD STUD WALL - 1-HR FIRE PARTITION W/ PROTECTED OPENINGS	1-W3-6 * • #

POWER PLAN GENERAL NOTES:

1. ALL RECEPTACLES ON COMMON WALLS SHALL BE SEPARATE BOXES AND OFFSET 24-INCHES MINIMUM.
2. ALL PENETRATIONS THROUGH FIRE RATED WALLS SHALL BE PROTECTED FROM THE SPREAD OF FIRE WITH AN APPROVED FIRESTOP SYSTEM EQUAL OR GREATER THAN THE FIRE RATING OF THE WALL.
3. ALL WALL-MOUNTED DEVICE HEIGHTS SHALL BE VERIFIED WITH THE ARCHITECT PRIOR TO ROUGH-IN.
4. ALL FURNITURE FEED LOCATIONS TO BE VERIFIED WITH ARCHITECT AND FURNITURE VENDOR PRIOR TO ROUGH-IN.
5. ALL FURNITURE WHIPS SHALL BE TRIMMED TO REDUCE EXCESS WHIP LENGTH.
6. WHEN EXPOSED CEILINGS OR OPEN GRID CONDITIONS OCCUR, THE CONTRACTOR WILL NEED TO PROVIDE THE FOLLOWING ITEMS:
   - ALL BRANCH CIRCUITS SHALL BE IN EMT.
   - ALL BRANCH CIRCUITS SHALL BE ROUTED NEATLY AND IN PARALLEL TO STRUCTURES OR DUCT WORK.
   - VISUALLY OBJECTIONABLE BRANCH CIRCUITS SHALL BE REROUTED AT THE REQUEST OF THE ARCHITECT AT NO ADDITIONAL COST.
7. EXPOSED CABLE/CONDUCTORS INSTALLED IN A PLENUM SPACE SHALL CONFORM TO NEC, OR CEC WHERE ADOPTED, ARTICLE 300.22(C).
8. PROVIDE G.F.C.I. TYPE RECEPTACLE(S) OR RECEPTACLE(S) PROTECTED BY A GFCI CIRCUIT BREAKER(S) WHEN LOCATED WITHIN 6 FEET OF ANY SINK OR THERAPEUTIC TUB, LAUNDRY AREA, SERVING ANY DRINKING FOUNTAIN OR VENDING MACHINE, WITHIN ANY KITCHEN SPACE AND/OR LOCATED OUTDOORS. WHERE RECEPTACLES ARE NOT READILY ACCESSIBLE, PROVIDE GFCI CIRCUIT BREAKER(S) TO PROTECT THE RESPECTIVE BRANCH CIRCUIT AND PROVIDE ADDITIONAL NEUTRAL CONDUCTORS IN THE BRANCH CIRCUITING AS REQUIRED TO ENSURE PROPER GFCI FUNCTION
9. PROVIDE OCCUPANCY SENSOR/LIGHTING CONTROL SYSTEM CONTROLLED RECEPTACLE RELAY(S) AS REQUIRED TO SWITCH CONTROLLED RECEPTACLES. CONNECT BRANCH CIRCUITRY AND CONTROL WIRING AS REQUIRED TO ALLOW OCCUPANCY SENSOR/LIGHTING CONTROL SYSTEM RELAY TO SWITCH STANDALONE AND/OR SYSTEMS FURNITURE CONTROLLED RECEPTACLES AS INDICATED ON PLANS. PROVIDE ADDITIONAL CONDUIT, WIRING AND PATHWAYS NECESSARY TO CONNECT BRANCH CIRCUITRY AND CONTROL WIRING TO REMOTE RELAYS TO INCLUDE RELAY(S) LOCATED ON ALTERNATE FLOORS, IN ELECTRICAL ROOMS, ETC.
10. UNLESS SPECIFICALLY SHOWN AS (E), (R), (ER), (D), EXISTING OR NON-BOLD, ALL ELECTRICAL DEVICES SHOWN ARE NEW.
11. PROVIDE REDUNDANT GROUND PATH IN ALL BRANCH CIRCUITS SERVING PATIENT CARE AREAS CONSISTING OF A SEPARATE, INSULATED EQUIPMENT GROUNDING CONDUCTOR PER NEC, OR CEC WHERE ADOPTED, ART 517.13.
12. CONTRACTOR SHALL PROVIDE CONDUIT AND WIRE FOR ALL DEVICES TO PANELBOARD(S) INDICATED ON PLANS FOR A COMPLETE AND OPERABLE SYSTEM.
13. CONTRACTOR SHALL PROVIDE MINIMUM 2#12, 1#12G IN ½" CONDUIT UNLESS OTHERWISE NOTED. REFERENCE WIRE SIZE TABLE CHART ABOVE. WHERE REQUIRED, CONDUIT AND WIRE SHALL BE UPSIZED TO MEET THE REQUIREMENT OF THE DEVICE BEING SERVED BY THE BRANCH CIRCUIT. WHERE CONDUIT AND WIRING IS INDICATED AT THE HOME RUN, WIRING AND CONDUIT SHALL CONTINUE AT THAT SIZE FOR THE ENTIRE LENGTH OF THE CIRCUIT.
14. CONTRACTOR SHALL FURNISH ADDITIONAL SWITCHLEGS OR HOT WIRES AS REQUIRED TO MEET THE CONTROL INTENT OF THE DOCUMENTS AND AS REQUIRED BY CODE (I.E. EMERGENCY LIGHTING AND SWITCHED RECEPTACLES).
15. MULTIPLE CIRCUITS MAY BE USED IN A SINGLE RACEWAY. NO MORE THAN (3) DEDICATED CIRCUITS OR (4) CURRENT CARRYING CONDUCTORS SHALL BE INSTALLED IN ANY RACEWAY UNLESS OTHERWISE NOTED. WHERE A COMMON GROUNDED CONDUCTOR IS USED FOR MULTIPLE INDIVIDUAL BRANCH CIRCUITS, PER SECTIONS CEC 200.4, 250.122, 310.15(B)(2). CONDUIT SIZE SHALL BE INCREASED AS REQUIRED FOR THE CONDUCTORS INCLUDING TEMPERATURE DERATING PER CEC TABLE C1.
16. FURNISH AND INSTALL JUNCTION BOXES AS REQUIRED TO MEET MAXIMUM BEND REQUIREMENTS FOR PULLING WIRES PER CEC 358.26. JUNCTION BOXES SHALL BE SIZED AS REQUIRED PER CEC 314.28 UNLESS OTHERWISE NOTED.

COMMUNICATIONS PATHWAYS GENERAL NOTES

1. CONDUITS SHALL, (a) CONTAIN NO CONTINUOUS SECTIONS LONGER THAN 30M (98 FT.), AND, (b) CONTAIN NO MORE THAN (2) 90° BENDS OR (1) REVERSE BEND WITHOUT INSTALLING A PULLBOX. SPLIT CONDUITS IN PLACE OF PULLBOXES ARE UNACCEPTABLE.
2. CONDUITS SHALL CONTAIN PLASTIC OR NYLON PULL TAPE RATED AT 200 LBS. WITH A MINIMUM OF 5 FEET OF EXTRA PULL TAPE COILED AT EACH END.
3. CONDUIT BEND RADIUS SHALL BE (a) A MINIMUM OF 6 TIMES THE INTERNAL CONDUIT DIAMETER FOR CONDUITS 2" IN DIAMETER OR LESS, AND, (b) 10 TIMES THE INTERNAL CONDUIT DIAMETER FOR CONDUITS MORE THAN 2" IN DIAMETER.
4. TERMINATE CONDUIT STUBS AND SLEEVES THAT PROTRUDE THROUGH STRUCTURAL FLOORS 2"-3" ABOVE THE FLOOR SURFACE.
5. INSTALL BUSHINGS OR BELL ENDS AS REQUIRED ON ALL CONDUITS.
6. FLEX CONDUIT IS UNACCEPTABLE FOR USE AS A COMMUNICATIONS CONDUIT EXCEPT AT SEISMIC JOINTS AND/OR IF APPROVED IN WRITING BY THE ENGINEER.
7. ALL UNDER SLAB OR IN-SLAB CONDUITS SHALL BE INSTALLED IN A MANNER THAT PREVENTS WATER INFILTRATION OF THE CONDUIT. IT IS THE CONTRACTOR'S RESPONSIBILITY TO ENSURE GROUND WATER, RAIN WATER OR CONSTRUCTION WATER IS PREVENTED FROM ENTERING AND/OR REMOVED FROM THE CONDUITS PRIOR TO PLACEMENT OF COMMUNICATIONS CABLES. SEE ELECTRICAL SPECIFICATIONS, DETAILS AND PLANS FOR ADDITIONAL CONDUIT SEALING REQUIREMENTS.
8. ALL PULLBOXES SHALL BE SIZED AND INSTALLED PER ANSI-TIA-569-C. PULLBOXES FOR IN/UNDER SLAB CONDUIT RUNS ARE NOT PERMITTED UNLESS OTHERWISE NOTED. PULLBOXES FOR OVERHEAD CONDUIT RUNS SHALL BE LOCATED ABOVE ACCESSIBLE CEILINGS WITHIN THE ACCESSIBLE CEILING SPACE AND SUPPORTED INDEPENDENTLY FROM THE STRUCTURE AND CONDUIT SUPPORTS. PULLBOXES FOR ROOF MOUNTED OR EXTERIOR ABOVE GRADE APPLICATIONS SHALL BE NEMA 3R RATED. PULLBOXES SHALL BE SIZED ACCORDING TO THE FOLLOWING:

CONDUIT SIZE	WIDTH	LENGTH	DEPTH	WIDTH INCREASE PER ADDITIONAL CONDUIT
1"	4"	16"	3"	2"
2"	8"	36"	4"	5"
3"	12"	48"	5"	6"
4"	15"	60"	8"	8"

FOR OTHER CONDUIT SIZES REFER TO ANSI/TIA-569-C TABLE 12 - LATEST PUBLISHED EDITION.

9. CONDUIT(S) SHALL EXIT A PULLBOX ON THE WALL OPPOSITE THE WALL ENTERED.
10. PROVIDE LABELING OF EACH CONDUIT PER GENERAL ELECTRICAL SPECIFICATIONS.
11. PROVIDE INTERNAL/EXTERNAL GAS AND WATER TIGHT MECHANICAL SEALING/PLUGGING OF EACH BUILDING ENTRY CONDUIT AS SPECIFIED ELSEWHERE IN THE DRAWINGS AND SPECIFICATIONS.

IDENTIFICATION STAMP
DIV. OF THE STATE ARCHITECT
APP: 02-118630 INC:
REVIEWED FOR
SS ☐ FLS ☐ ACS ☑
DATE: 04/13/2021

OFFICE OF THE STATE FIRE MARSHAL
APPROVED FIRE AND PANIC ONLY
Approval of this plan does not authorize or approve any omission or deviation from applicable regulations. Final approval is subject to field inspection. One set of approved plans shall be available on the project site at all times.
PERMIT NO: 20-N 2332-CP
REVIEWED BY: LEO CATAYLO, OSFM
DATE: 4 / /2021

DGS GENERAL SERVICES
Department of General Services
State of California
Real Estate Services Division
Project Management & Development Branch
707 Third Street, Suite 4-105
West Sacramento, California 95605

NICHOLS MELBURG & ROSSETTO ARCHITECTS + ENGINEERS
300 Knollcrest Drive
Redding, CA. 96002
(530) 222-3300 (530) 222-3538 FAX
http://www.nmrdesign.com

Copyright © 2019
All ideas, designs, arrangements and plans indicated or represented by this drawing are owned by, and the property of, NICHOLS, MELBURG and ROSSETTO and were created, evolved and developed for use on, and in connection with, the specified project. None of such ideas, designs, arrangements or plans shall be used by, or disclosed to, any person, firm or corporation for any purpose whatsoever without the written permission of NICHOLS, MELBURG and ROSSETTO.

LICENSE STAMPS

REGISTERED PROFESSIONAL ENGINEER RAYMOND W. SWIFT No. E15610 12/31/2021 ELECTRICAL STATE OF CALIFORNIA
Date Signed: 3/25/2021

CONSULTANT
tklsc COLLABORATIVE
11870 Pierce Street, Suite 160
Riverside, California 92505
951.299.4160 www.tk1sc.com
Project Leader - Jerry Leonhardt
Electrical Lead - Reid Cordry
tk1sc Job #:2019-0228A

DRAWING STATUS
CONSTRUCTION DOCUMENTS

ISSUE

No.	Date	Description
1	10/20/2020	INITIAL PLAN REVIEW
2	01/22/2021	AGENCY RESUBMITTAL
3	03/22/2021	AGENCY RESUBMITTAL

If drawing is not 30" x 42" it is a reduced print

PROJECT
RESIDENTIAL CENTER, UKIAH: REPLACEMENT OF EXISTING RESIDENTIAL CENTER
440 EAST HILL ROAD
WILLITS, CALIFORNIA 95490
MENDOCINO COUNTY
CALIFORNIA CONSERVATION CORP

Supervisor	Designed	Drawn
		Author

DSA Application No.
XX-XXXXXX

SHEET TITLE
RECREATION BUILDING POWER AND SIGNAL PLAN

DGS Project Number	NMR Project Number
XXXXX	18-6456

Reference North
Sheet Scale: As indicated
Sheet Number: E201R

ISSUE DATE
July 9, 2021

Plot Date: 3/24/2021 9:39:48 AM
File Name: BIM 360://CCC Willits Residential Center/E_CCC Willits_REC_2019-0228A.rvt

KEYNOTES

2.022 PROVIDE 3/4"C.O.(S) TO RESPECTIVE CONTROL DEVICE(S) FOR CONTROL WIRING. REFER TO THE EQUIPMENT CONTROL WIRING DIAGRAMS FOR ADDITIONAL INFORMATION.

2.023 REFER TO MOTORIZED EQUIPMENT SCHEDULE FOR MOTOR FEEDER/ BRANCH CIRCUIT INFORMATION.

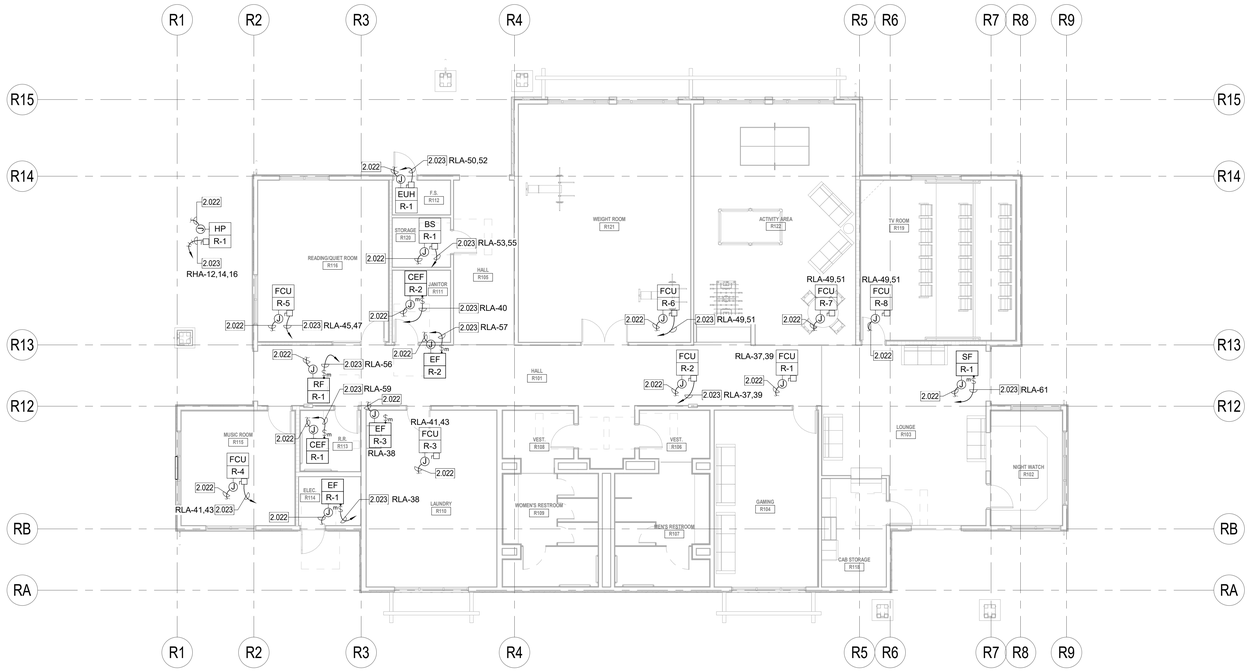

NORTH

RECREATION BUILDING MECHANICAL POWER PLAN

SCALE: 1/8" = 1'-0"

MOTORIZED EQUIPMENT SCHEDULE

TAG	ITEM	DESCRIPTION	EQUIPMENT RATING VOLTS	PH.	MOTOR HP	MOTOR FLA	VFD FLA	MCA	MOCP	DISC. SW. SIZE STARTER SIZE	CIRCUIT DATA CONDUIT - WIRE	SPECIFIC NOTES
BS	R-1	BRANCH SELECTOR	208	1		0.6		0.8	15 A	30AS	3/4"C. - 2#12, 1#12 GRD.	A
CEF	R-1	EXHAUST FAN	115	1	.25	13.8		17.3	15 A	Motor Rated	3/4"C. - 2#12, 1#12 GRD.	A,C
CEF	R-2	EXHAUST FAN	115	1	.5	13.8		17.3	15 A	Motor Rated	3/4"C. - 2#12, 1#12 GRD.	A,C
EF	R-1	EXHAUST FAN	115	1	.167	4.4		5.5	15 A	Motor Rated	3/4"C. - 2#12, 1#12 GRD.	A,C
EF	R-2	EXHAUST FAN	115	1	.25	5.8		7.3	15 A	Motor Rated	3/4"C. - 2#12, 1#12 GRD.	A,C
EF	R-3	EXHAUST FAN	115	1	.5	9.8		12.3	15 A	Motor Rated	3/4"C. - 2#12, 1#12 GRD.	A,C
EUH	R-1	HEATER UNIT	208	1		12.7		15.9	20 A	30AS	3/4"C. - 2#12, 1#12 GRD.	A
FCU	R-1	FAN COIL UNIT	208	1		2.7		3.4	15 A	30AS	3/4"C. - 2#12, 1#12 GRD.	A
FCU	R-2	FAN COIL UNIT	208	1		2.7		3.4	15 A	30AS	3/4"C. - 2#12, 1#12 GRD.	A
FCU	R-3	FAN COIL UNIT	208	1		0.5		0.6	15 A	30AS	3/4"C. - 2#12, 1#12 GRD.	A
FCU	R-4	FAN COIL UNIT	208	1		0.3		0.4	15 A	30AS	3/4"C. - 2#12, 1#12 GRD.	A
FCU	R-5	FAN COIL UNIT	208	1		1.1		1.4	15 A	30AS	3/4"C. - 2#12, 1#12 GRD.	A
FCU	R-6	FAN COIL UNIT	208	1		1.4		1.8	15 A	30AS	3/4"C. - 2#12, 1#12 GRD.	A
FCU	R-7	FAN COIL UNIT	208	1		1.3		1.6	15 A	30AS	3/4"C. - 2#12, 1#12 GRD.	A
FCU	R-8	FAN COIL UNIT	208	1		1.2		1.5	15 A	30AS	3/4"C. - 2#12, 1#12 GRD.	A
HP	R-1	HEAT PUMP	460	3		16.9		21.1	25 A	30AS	3/4"C. - 3#10, 1#10 GRD.	A
RF	R-1	EXHAUST FAN	115	1	.5	9.8		12.3	15 A	Motor Rated	3/4"C. - 2#12, 1#12 GRD.	A,C
SF	R-1	EXHAUST FAN	115	1	.5	13.8		17.3	20 A	Motor Rated	3/4"C. - 2#12, 1#12 GRD.	A,C

WALL TYPES LEGEND

SEE SHEET G121 FOR ASSEMBLY TYPES

EXTERIOR

- 2 x 6 WOOD STUD WALL - NON RATED — 0-W1-6 * ◆ #
- 2 x 12 WOOD STUD WALL - NON RATED — 0-W1-12 * ◆ #

INTERIOR

- 2 x 4 WOOD STUD WALL - NON RATED — 0-W2-4 * ◆ #
- 2 x 6 WOOD STUD WALL - NON RATED — 0-W2-6 * ◆ #
- 2 x 8 WOOD STUD WALL - NON RATED — 0-W2-8 * ◆ #
- 2 x 12 WOOD STUD WALL - NON RATED — 0-W2-12 * ◆ #
- 2 x 4 WOOD STUD WALL - ACOUSTIC — 0-W5-4 * ◆ #
- 2 x 6 WOOD STUD WALL - ACOUSTIC — 0-W5-6 * ◆ #
- 2 X 4 WOOD STUD WALL - 1-HR FIRE PARTITION W/ PROTECTED OPENINGS — 1-W3-4 * ◆ #
- 2 X 6 WOOD STUD WALL - 1-HR FIRE PARTITION W/ PROTECTED OPENINGS — 1-W3-6 * ◆ #

WALL TYPE NOTES

PARTITION SYMBOL

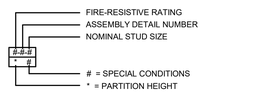

POWER PLAN GENERAL NOTES:

1. ALL RECEPTACLES ON COMMON WALLS SHALL BE SEPARATE BOXES AND OFFSET 24-INCHES MINIMUM.
2. ALL PENETRATIONS THROUGH FIRE RATED WALLS SHALL BE PROTECTED FROM THE SPREAD OF FIRE WITH AN APPROVED FIRESTOP SYSTEM EQUAL OR GREATER THAN THE FIRE RATING OF THE WALL.
3. ALL WALL-MOUNTED DEVICE HEIGHTS SHALL BE VERIFIED WITH THE ARCHITECT PRIOR TO ROUGH-IN.
4. ALL FURNITURE FEED LOCATIONS TO BE VERIFIED WITH ARCHITECT AND FURNITURE VENDOR PRIOR TO ROUGH-IN.
5. ALL FURNITURE WHIPS SHALL BE TRIMMED TO REDUCE EXCESS WHIP LENGTH.
6. WHEN EXPOSED CEILINGS OR OPEN GRID CONDITIONS OCCUR, THE CONTRACTOR WILL NEED TO PROVIDE THE FOLLOWING ITEMS:

   - ALL BRANCH CIRCUITS SHALL BE IN EMT.

   - ALL BRANCH CIRCUITS SHALL BE ROUTED NEATLY AND IN PARALLEL TO STRUCTURES OR DUCT WORK.

   - VISUALLY OBJECTIONABLE BRANCH CIRCUITS SHALL BE REROUTED AT THE REQUEST OF THE ARCHITECT AT NO ADDITIONAL COST.
7. EXPOSED CABLE/CONDUCTORS INSTALLED IN A PLENUM SPACE SHALL CONFORM TO NEC, OR CEC WHERE ADOPTED, ARTICLE 300.22(C).
8. PROVIDE G.F.C.I. TYPE RECEPTACLE(S) OR RECEPTACLE(S) PROTECTED BY A GFCI CIRCUIT BREAKER(S) WHEN LOCATED WITHIN 6 FEET OF ANY SINK OR THERAPEUTIC TUB, LAUNDRY AREA, SERVING ANY DRINKING FOUNTAIN OR VENDING MACHINE, WITHIN ANY KITCHEN SPACE AND/OR LOCATED OUTDOORS. WHERE RECEPTACLES ARE NOT READILY ACCESSIBLE, PROVIDE GFCI CIRCUIT BREAKER(S) TO PROTECT THE RESPECTIVE BRANCH CIRCUIT AND PROVIDE ADDITIONAL NEUTRAL CONDUCTORS IN THE BRANCH CIRCUITING AS REQUIRED TO ENSURE PROPER GFCI FUNCTION
9. PROVIDE OCCUPANCY SENSOR/LIGHTING CONTROL SYSTEM CONTROLLED RECEPTACLE RELAY(S) AS REQUIRED TO SWITCH CONTROLLED RECEPTACLES. CONNECT BRANCH CIRCUITRY AND CONTROL WIRING AS REQUIRED TO ALLOW OCCUPANCY SENSOR/LIGHTING CONTROL SYSTEM RELAY TO SWITCH STANDALONE AND/OR SYSTEMS FURNITURE CONTROLLED RECEPTACLES AS INDICATED ON PLANS. PROVIDE ADDITIONAL CONDUIT, WIRING AND PATHWAYS NECESSARY TO CONNECT BRANCH CIRCUITRY AND CONTROL WIRING TO REMOTE RELAYS TO INCLUDE RELAY(S) LOCATED ON ALTERNATE FLOORS, IN ELECTRICAL ROOMS, ETC.
10. UNLESS SPECIFICALLY SHOWN AS (E), (R), (ER), (D), EXISTING OR NON-BOLD, ALL ELECTRICAL DEVICES SHOWN ARE NEW.
11. PROVIDE REDUNDANT GROUND PATH IN ALL BRANCH CIRCUITS SERVING PATIENT CARE AREAS CONSISTING OF A SEPARATE, INSULATED EQUIPMENT GROUNDING CONDUCTOR PER NEC, OR CEC WHERE ADOPTED, ART 517.13.
12. CONTRACTOR SHALL PROVIDE CONDUIT AND WIRE FOR ALL DEVICES TO PANELBOARD(S) INDICATED ON PLANS FOR A COMPLETE AND OPERABLE SYSTEM.
13. CONTRACTOR SHALL PROVIDE MINIMUM 2#12, 1#12G IN ½" CONDUIT UNLESS OTHERWISE NOTED. REFERENCE WIRE SIZE TABLE CHART ABOVE. WHERE REQUIRED, CONDUIT AND WIRE SHALL BE UPSIZED TO MEET THE REQUIREMENT OF THE DEVICE BEING SERVED BY THE BRANCH CIRCUIT. WHERE CONDUIT AND WIRING IS INDICATED AT THE HOME RUN, WIRING AND CONDUIT SHALL CONTINUE AT THAT SIZE FOR THE ENTIRE LENGTH OF THE CIRCUIT.
14. CONTRACTOR SHALL FURNISH ADDITIONAL SWITCHLEGS OR HOT WIRES AS REQUIRED TO MEET THE CONTROL INTENT OF THE DOCUMENTS AND AS REQUIRED BY CODE (I.E. EMERGENCY LIGHTING AND SWITCHED RECEPTACLES).
15. MULTIPLE CIRCUITS MAY BE USED IN A SINGLE RACEWAY. NO MORE THAN (3) DEDICATED CIRCUITS OR (4) CURRENT CARRYING CONDUCTORS SHALL BE INSTALLED IN ANY RACEWAY UNLESS OTHERWISE NOTED. WHERE A COMMON GROUNDED CONDUCTOR IS USED FOR MULTIPLE INDIVIDUAL BRANCH CIRCUITS, PER SECTIONS CEC 200.4, 250.122, 310.15(B)(2), CONDUIT SIZE SHALL BE INCREASED AS REQUIRED FOR THE CONDUCTORS INCLUDING TEMPERATURE DERATING PER CEC TABLE C1.
16. FURNISH AND INSTALL JUNCTION BOXES AS REQUIRED TO MEET MAXIMUM BEND REQUIREMENTS FOR PULLING WIRES PER CEC 358.26. JUNCTION BOXES SHALL BE SIZED AS REQUIRED PER CEC 314.28 UNLESS OTHERWISE NOTED.

MOTORIZED EQUIPMENT SCHEDULE GENERAL NOTES:

1. ALL BRANCH CIRCUIT DATA IS BASED UPON METALLIC CONDUITS. IF THE CONTRACTOR ELECTS TO USE NONMETALLIC CONDUITS, AN EQUIPMENT GROUNDING CONDUCTOR SHALL BE INSTALLED PER NEC, OR CEC WHERE ADOPTED, TABLE 250.122 AND THE CONDUIT SIZE SHALL BE INCREASED ACCORDINGLY.
2. ELECTRICAL CONTRACTOR SHALL REFER TO ALL DOCUMENTS RELATED TO THE EQUIPMENT (I.E. SHOP DRAWINGS, CONSTRUCTION DOCUMENTS, ETC.) IN REGARDS TO ELECTRICAL CHARACTERISTICS OF ALL EQUIPMENT LISTED IN THE SCHEDULE. ANY MODIFICATION AND/OR ADDITIONAL WORK NECESSARY SHALL BE INCLUDED IN THE BASE BID.
3. ELECTRICAL CONTRACTOR SHALL CHECK THE ROTATION OF ALL THREE PHASE MOTORS AND CORRECT THE ROTATION IF REVERSED.
4. ELECTRICAL CONTRACTOR SHALL PROVIDE FUSES SIZED PER THE EQUIPMENT NAMEPLATE INFORMATION.
5. DISCONNECT SWITCHES SHALL BE HEAVY DUTY TYPE, EXTERNALLY OPERATED, QUICK MAKE QUICK BREAK AND SHALL BE FUSIBLE OR NON FUSIBLE AS INDICATED. A MAXIMUM VOLTAGE, CURRENT AND HORSEPOWER SHALL BE CLEARLY MARKED ON SWITCH ENCLOSURE. SWITCHES HAVING DUAL RATINGS (HIGHER RATINGS WHEN USED WITH DUAL ELEMENT FUSES) SHALL HAVE RATINGS INDICATED ON METAL PLATES RIVETED OR OTHERWISE PERMANENTLY ATTACHED TO THE ENCLOSURE. WHEN INDICATED, TOGGLE SWITCHES SHALL BE MOTOR RATED FOR THE APPLICATION.
6. STARTERS SHALL BE FULL VOLTAGE, REDUCED VOLTAGE OR COMBINATION DISCONNECT AND STARTER, WITH CONTROL VOLTAGE AS REQUIRED, AS INDICATED ON THE DOCUMENTS RELATED TO THE EQUIPMENT, SUCH AS SHOP DRAWINGS, CONSTRUCTION DOCUMENTS, ETC. STARTERS SHALL INCLUDE MOTOR OVERLOAD PROTECTION, PHASE LOSS AND PHASE UNBALANCE PROTECTION AS REQUIRED.
7. ALL TERMINATIONS AND ENCLOSURES SHALL BE RATED FOR USE WITH 75 DEGREE C CONDUCTORS.
8. COMPLETE INSTALLATION SHALL CONFORM TO THE REQUIREMENTS OF NEC (OR CEC WHERE ADOPTED) ARTICLES 430 AND 440.
9. CONTRACTOR TO COORDINATE WITH ALL OTHER PROJECT TRADES AND WITH OWNER/ TENANT FOR TO OBTAIN RESPECTIVE EQUIPMENT SCCR AND PROVIDE APPROPRIATE PROTECTIVE DEVICES TO LIMIT AVAILABLE FAULT CURRENT TO LESS THAN THE EQUIPMENT NAMEPLATE SCCR PER NEC (OR CEC WHERE ADOPTED) 110.10. SEE POWER SYSTEM STUDY SPECIFICATIONS FOR ADDITIONAL REQUIREMENTS.
10. UNLESS OTHERWISE NOTED, MOCP VALUES FOR VFD-EQUIPPED DEVICE ARE SIZED PER NEC (OR CEC WHERE ADOPTED) 430.130(A).1. CONTRACTOR SHALL COORDINATE WITH ALL OTHER PROJECT TRADES AND WITH OWNER/ TENANT (IF PROVIDING EQUIPMENT ON PROJECT) TO OBTAIN NAMEPLATE VFD-EQUIPPED DEVICE MOCP VALUE FROM MANUFACTURER INSTALLATION INSTRUCTIONS AND PROVIDE APPROPRIATE PROTECTIVE DEVICES TO COMPLY WITH NEC (OR CEC WHERE ADOPTED) 430.130(A).2.

MOTORIZED EQUIPMENT SCHEDULE SPECIFIC NOTES:

A. FUSED AS RECOMMENDED BY MANUFACTURER.

B. MAGNETIC MOTOR STARTER WITH CONTROL TRANSFORMER, AUXILIARY CONTACTS, INDICATOR LIGHT AND H.O.A. SWITCH. VERIFY CONTROL TRANSFORMER VOLTAGE WITH M.C. PRIOR TO ORDERING MATERIAL.

C. ROUTE THROUGH LINE VOLTAGE CONTROL. SEE MECHANICAL AND/OR PLUMBING PLANS FOR ADDITIONAL REQUIREMENTS.

D. VERIFY LOCATION WITH PLUMBING PLANS PRIOR TO ROUGH-IN. CONNECT TO AQUASTAT AND TIME CLOCK AS REQUIRED.

E. REMOTE VFD. PROVIDE EARLY BREAK CONTACTS ON ANY DISCONNECT SWITCHES REQUIRED BY CODE OR SHOWN ON PLANS THAT ARE DOWNSTREAM OF THE REMOTE VFD. PROVIDE CONDUIT AND CONDUCTORS AS REQUIRED TO INTERCONNECT THE CONTACT WITH VFD "ENABLE" TERMINALS. REFER TO MECHANICAL AND/OR PLUMBING PLANS FOR LOCATION. PROVIDE FEEDER(S) TO CONNECT REMOTE VFD AND MOTOR(S) AS REQUIRED.

F. INTEGRAL VFD PROVIDED WITH EQUIPMENT. REFER TO MECHANICAL AND/OR PLUMBING PLANS FOR LOCATION. CONNECT TO VFD AS REQUIRED.

G. INTEGRAL DISCONNECT PROVIDED WITH EQUIPMENT. REFER TO MECHANICAL AND/OR PLUMBING PLANS FOR LOCATION. CONNECT TO INTEGRAL DISCONNECT AS REQUIRED.

H. INTEGRAL DISCONNECT PROVIDED WITH VFD. REFER TO MECHANICAL AND/OR PLUMBING PLANS FOR LOCATION. CONNECT TO INTEGRAL DISCONNECT AS REQUIRED.

J. INDOOR UNIT POWERED FROM RESPECTIVE OUTDOOR UNIT. PROVIDE POWER AND CONTROL WIRING AS REQUIRED.

K. ROUTE THROUGH LINE VOLTAGE CONTROL FOR KITCHEN HOOD FIRE SUPPRESSION SYSTEM. SEE MECHANICAL, FIRE ALARM AND FOOD SERVICE PLANS FOR ADDITIONAL REQUIREMENTS.

IDENTIFICATION STAMP
DIV. OF THE STATE ARCHITECT
APP: 02-118630 INC:
REVIEWED FOR
SS ☐ FLS ☐ ACS ☑
DATE: 04/13/2021

OFFICE OF THE STATE FIRE MARSHAL
APPROVED FIRE AND PANIC ONLY
Approval of this plan does not authorize or approve any omission or deviation from applicable regulations. Final approval is subject to field inspection. One set of approved plans shall be available on the project site at all times.
PERMIT NO.: 20-N-2332-CP
REVIEWED BY: LEO CATAYLO, OSFM
DATE: 4 / /2021

DGS GENERAL SERVICES
Department of General Services
State of California
Real Estate Services Division
Project Management & Development Branch
707 Third Street, Suite 4-105
West Sacramento, California 95605

NICHOLS MELBURG & ROSSETTO ARCHITECTS + ENGINEERS
300 Knollcrest Drive
Redding, CA. 96002
(530) 222-3300 (530) 222-3538 FAX
http://www.nmrdesign.com

Copyright © 2019
All ideas, designs, arrangements and plans indicated or represented by this drawing are owned by, and the property of, NICHOLS, MELBURG and ROSSETTO and were created, evolved and developed for use on, and in connection with, the specified project. None of such ideas, designs, arrangements or plans shall be used by, or disclosed to any person, firm or corporation for any purpose whatsoever without the written permission of NICHOLS, MELBURG and ROSSETTO

LICENSE STAMPS

REGISTERED PROFESSIONAL ENGINEER RAYMOND W. SWEETEN No. E15610 12/31/2021 ELECTRICAL STATE OF CALIFORNIA
Date Signed: 3/25/2021

CONSULTANT
tklsc COLLABORATIVE
11870 Pierce Street, Suite 160
Riverside, California 92505
951.299.4160 www.tk1sc.com
Project Leader - Jerry Leonhardt
Electrical Lead - Reid Cordry
tk1sc Job #:2019-0228A

DRAWING STATUS
CONSTRUCTION DOCUMENTS

ISSUE

No.	Date	Description
1	10/20/2020	INITIAL PLAN REVIEW
2	01/22/2021	AGENCY RESUBMITTAL
3	03/22/2021	AGENCY RESUBMITTAL

If drawing is not 30" x 42" it is a reduced print

PROJECT
RESIDENTIAL CENTER, UKIAH: REPLACEMENT OF EXISTING RESIDENTIAL CENTER
440 EAST HILL ROAD
WILLITS, CALIFORNIA 95490
MENDOCINO COUNTY
CALIFORNIA CONSERVATION CORP

Supervisor	Designed	Drawn
		Author

DSA Application No.
XX-XXXXXX

SHEET TITLE
RECREATION BUILDING MECHANICAL POWER PLAN

DGS Project Number: XXXXX
NMR Project Number: 18-6456

Reference North: NORTH
Sheet Scale: As indicated
Sheet Number: E301R

ISSUE DATE
July 9, 2021

Plot Date: 3/24/2021 9:39:56 AM
File Name: BIM 360:/CCC Willits Residential Center/E_CCC Willits_REC_2019-0228A.rvt

PANEL: RLA

MOUNTING: Surface **DOUBLE-LUGS:** No **VOLTS:** 120/208 Wye **SUPPLY FROM:** TR
NEMA 3R: No **200% NEUTRAL:** No **PHASE:** 3 **LOCATION:** ELEC. R114
FEED THRU: No **I/G BUS:** No **WIRE:** 4 **MCB:** 400A-3P
M.L.O.: No **AIC:** 10,000 **BUS:** 400A

NOTE	DESCRIPTION	BKR	POLE	TYPE	CIRC	A	B	C	CIRC	TYPE	POLE	BKR	DESCRIPTION	NOTE
	R MUSIC ROOM R115	20 A	1	R	1	720	1250		2	R	1	20 A	R CAB STORAGE R118	
	R Room R114, R101, R113	20 A	1	R	3		900	720	4	R	1	20 A	R Room R108, R106, R107, R109	
	R EXTERIOR	20 A	1	R	5			900 720	6	R	1	20 A	R GAMING R104	
	P WOMEN'S RESTROOM R109 HAND DRYER	20 A	1	P	7	1000	900		8	R	1	20 A	R GAMING R104	
	P MEN'S RESTROOM R107 HAND DRYER	20 A	1	P	9		1000	540	10	R	1	20 A	R CAB STORAGE R118	
	R READING/QUIET ROOM R116	20 A	1	R	11			720 500	12	R	1	20 A	R HALL R101	
	R Room R111, R120, R112, R105	20 A	1	R	13	900	540		14	R	1	20 A	R LOUNGE R103	
	R WEIGHT ROOM R121	20 A	1	R	15		900	900	16	R	1	20 A	R NIGHT WATCH R102	
	R WEIGHT ROOM R121	20 A	1	R	17			900 540	18	R	1	20 A	R NIGHT WATCH R102	
	R ELEC. R114	20 A	1	R	19	1000	720		20	R	1	20 A	R Room R122, R101	
	R TV ROOM R119	20 A	1	R	21		540	720	22	R	1	20 A	R ACTIVITY AREA R122	
	R TV ROOM R119	20 A	1	R	23			720 180	24	P	1	20 A	P R.R. R113	
	FCU LIGHTS	20 A	1	L R	25	772	772		26	L R	1	20 A	FCU LIGHTS	
	SPARE	20 A	1	--	27			0 0	28	--	1	20 A	SPARE	
	SPARE	20 A	1	--	29			0 0	30	--	1	20 A	SPARE	
					31				32					
					33				34					
					35				36					
	M FCU R-1, R-2	20 A	2	M	37	560	510		38	M	1	20 A	M EF R-1, R-3	
--	--	--	--	--	39			560 1590	40	M	1	20 A	M CEF R-2	
	M FCU R-3, R-4	20 A	2	M	41			80 7000	42	P	2	90 A	P JANITOR R111 EWH	A
--	--	--	--	--	43	80	7000		44	--	--	--		--
	M FCU R-5	15 A	2	M	45			145 14000	46	P	2	175 A	P JANITOR R111 EWH	A
--	--	--	--	--	47			145 14000	48	--	--	--	--	--
	M FCU R-6, R-7, R-8	20 A	2	M	49	405	1320		50	M	2	20 A	M EUH R-1	
--	--	--	--	--	51			405 1320	52	--	--	--	--	--
	M BS R-1	15 A	2	M	53			60 0	54	--	1	20 A	SPARE	
--	--	--	--	--	55	60	1130		56	M	1	15 A	M RF R-1	
	M EF R-2	15 A	1	M	57			670 0	58	--	1	20 A	SPARE	
	M CEF R-1	20 A	1	M	59			1590 0	60	--	1	20 A	SPARE	
	M SF R-1	20 A	1	M	61	1590	24060		62	P	3	225A	PANEL RLB	
	SPARE	20 A	1	--	63			0 20970	64	--	--	--	--	--
--	SPACE	--	--	--	65			0 19130	66	--	--	--	--	--
				PHASE TOTALS:		45289.00 VA		45880.00 VA 47185.00 VA						
						377.4 A		383.1 A 394.0 A						

COMMENTS:

LOAD TYPE KEY	LOAD CLASSIFICATION	CONNECTED LOAD	AVG. DEMAND...	ESTIMATED DEMAND	PANEL TOTALS	AMPS	KVA
H = HVAC EQUIP	P	108.34 kVA	100.00%	108.34 kVA			
K = KITCHEN	R	17.69 kVA	78.26%	13.85 kVA	TOTAL CONNECTED LOAD:	384.0 A	138.35 kVA
L = LIGHTING	L	0.10 kVA	125.00%	0.13 kVA	TOTAL DEMAND LOAD:	375.3 A	135.20 kVA
M = MOTOR	M	12.22 kVA	105.40%	12.88 kVA	HIGH PHASE:	394 A	47.19 kVA
P = POWER							
R = RECEPTACLE							
W = WATER HEATER							

PANEL: RLB

MOUNTING: Surface **DOUBLE-LUGS:** No **VOLTS:** 120/208 Wye **SUPPLY FROM:** RLA
NEMA 3R: No **200% NEUTRAL:** No **PHASE:** 3 **LOCATION:** ELEC. R114
FEED THRU: No **I/G BUS:** No **WIRE:** 4 **MCB:** M.L.O.
M.L.O.: Yes **AIC:** 10,000 **BUS:** 225A

NOTE	DESCRIPTION	BKR	POLE	TYPE	CIRC	A (VA)	B (VA)	C (VA)	CIRC	TYPE	POLE	BKR	DESCRIPTION	NOTE
	R LAUNDRY R110	40 A	2	P	1	3090	1840		2	P	1	20 A	R LAUNDRY R110 WASHER	
--	--	--	--	--	3		3090	1840	4	P	1	20 A	R LAUNDRY R110 WASHER	
	R LAUNDRY R110	40 A	2	P	5			3090 1840	6	P	1	20 A	R LAUNDRY R110 WASHER	
--	--	--	--	--	7	3090	1840		8	P	1	20 A	R LAUNDRY R110 WASHER	
	R LAUNDRY R110	40 A	2	P	9		3090	1840	10	P	1	20 A	R LAUNDRY R110 WASHER	
--	--	--	--	--	11			3090 1840	12	P	1	20 A	R LAUNDRY R110 WASHER	
	R LAUNDRY R110	40 A	2	P	13	3090	1840		14	P	1	20 A	R LAUNDRY R110 WASHER	
--	--	--	--	--	15		3090	1840	16	P	1	20 A	R LAUNDRY R110 WASHER	
	R LAUNDRY R110	40 A	2	P	17			3090 0	18	--	1	20 A	SPARE	
--	--	--	--	--	19	3090	0		20	--	1	20 A	SPARE	
	R LAUNDRY R110	40 A	2	P	21		3090	0	22	--	1	20 A	SPARE	
--	--	--	--	--	23			3090 0	24	--	1	20 A	SPARE	
	R LAUNDRY R110	40 A	2	P	25	3090	0		26	--	1	20 A	SPARE	
--	--	--	--	--	27		3090	0	28	--	1	20 A	SPARE	
	R LAUNDRY R110	40 A	2	P	29			3090 0	30	--	1	20 A	SPARE	
--	--	--	--	--	31	3090	0		32	--	1	20 A	SPARE	
	SPARE	20 A	1	--	33		0	0	34	--	1	20 A	SPARE	
	SPARE	20 A	1	--	35			0 0	36	--	1	20 A	SPARE	
--	SPACE	--	--	--	37	0	0		38	--	--	--	SPACE	--
--	SPACE	--	--	--	39		0	0	40	--	--	--	SPACE	--
--	SPACE	--	--	--	41			0 0	42	--	--	--	SPACE	--
				PHASE TOTALS:		24060.00 VA	20970.00 VA	19130.00 VA						
						202.9 A	177.1 A	159.4 A						

COMMENTS:

LOAD TYPE KEY	LOAD CLASSIFICATION	CONNECTED LOAD	AVG. DEMAND...	ESTIMATED DEMAND	PANEL TOTALS	AMPS	KVA
H = HVAC EQUIP	P	64.16 kVA	100.00%	64.16 kVA			
K = KITCHEN					TOTAL CONNECTED LOAD:	178.1 A	64.16 kVA
L = LIGHTING					TOTAL DEMAND LOAD:	178.1 A	64.16 kVA
M = MOTOR					HIGH PHASE:	203 A	24.06 kVA
P = POWER							
R = RECEPTACLE							
W = WATER HEATER							

PANEL: RHA

MOUNTING: Surface **DOUBLE-LUGS:** No **VOLTS:** 480/277 Wye **SUPPLY FROM:** MSA
NEMA 3R: No **200% NEUTRAL:** No **PHASE:** 3 **LOCATION:** ELEC. R114
FEED THRU: No **I/G BUS:** No **WIRE:** 4 **MCB:** 300A-3P
M.L.O.: No **AIC:** 22,000 **BUS:** 400A

NOTE	DESCRIPTION	BKR	POLE	TYPE	CIRC	A (VA)	B (VA)	C (VA)	CIRC	TYPE	POLE	BKR	DESCRIPTION	NOTE
					1		740		2	L	1	20 A	SITE LIGHTING	H
	L Room R101, R103, R102	20 A	1	L	3			780 774	4	L	1	20 A	L EXTERIOR	H
	L Room R116, R121, R119, R105, R111, R120, R112...	20 A	1	L	5			1166 0	6	--	1	20 A	SPARE	
--	SPACE	--	--	--	7	0	0		8	--	--	--	SPACE	--
--	SPACE	--	--	--	9		0	0	10	--	--	--	SPACE	--
	SPARE	20 A	1	--	11			0 4487	12	M	3	25 A	M HP-R1	
	SPARE	20 A	1	--	13	0	4487		14	--	--	--	--	--
	SPARE	20 A	1	--	15		0	4487	16	--	--	--	--	--
	SPARE	20 A	1	--	17			0 0	18	--	1	20 A	SPARE	
	SPARE	20 A	1	--	19	0	0		20	--	1	20 A	SPARE	
	SPARE	20 A	1	--	21		0	0	22	--	1	20 A	SPARE	
	SPARE	20 A	1	--	23			0 0	24	--	1	20 A	SPARE	
	SPARE	20 A	1	--	25	0	0		26	--	1	20 A	SPARE	
	SPARE	20 A	1	--	27		0	0	28	--	1	20 A	SPARE	
	SPARE	20 A	1	--	29			0 0	30	--	1	20 A	SPARE	
--	SPACE	--	--	--	31	0	0		32	--	--	--	SPACE	--
--	SPACE	--	--	--	33		0	0	34	--	--	--	SPACE	--
--	SPACE	--	--	--	35			0 0	36	--	--	--	SPACE	--
--	SPACE	--	--	--	37	0	45289		38	P	3	225A	TRANSFORMER TR	
--	SPACE	--	--	--	39		0	45880	40	--	--	--	--	--
--	SPACE	--	--	--	41			0 47185	42	--	--	--	--	--
				PHASE TOTALS:		50515.67 VA	51920.67 VA	52837.27 VA						
						182.4 A	188.2 A	191.5 A						

COMMENTS:

LOAD TYPE KEY	LOAD CLASSIFICATION	CONNECTED LOAD	AVG. DEMAND...	ESTIMATED DEMAND	PANEL TOTALS	AMPS	KVA
H = HVAC EQUIP	P	108.34 kVA	100.00%	108.34 kVA			
K = KITCHEN	R	17.69 kVA	78.26%	13.85 kVA	TOTAL CONNECTED LOAD:	186.8 A	155.27 kVA
L = LIGHTING	L	3.56 kVA	125.00%	4.45 kVA	TOTAL DEMAND LOAD:	187.3 A	155.68 kVA
M = MOTOR	M	25.68 kVA	113.10%	29.05 kVA	HIGH PHASE:	192 A	52.84 kVA
P = POWER							
R = RECEPTACLE							
W = WATER HEATER							

PANEL SCHEDULE SPECIFICATIONS:

1. WHERE PANEL IS INDICATED TO INCLUDE FEED THRU LUGS, PROVIDE FEED THROUGH LUGS AT THE OPPOSITE END OF THE PANELBOARD FROM THE PANELBOARD MAIN LUGS.
2. WHERE PANEL IS INDICATED TO INCLUDE DOUBLE LUGS, PROVIDE A DOUBLE LUG KIT AT THE SAME END OF THE PANELBOARD AS THE PANELBOARD MAIN LUGS.
3. WHERE PANEL IS INDICATED TO INCLUDE 200% NEUTRAL, PROVIDE PANELBOARDS UL LISTED AS HAVING NEUTRAL BUSSES RATED TO CARRY 200 PERCENT OF THE CURRENT CARRYING CAPACITY OF THE PHASE BUSSING. OTHERWISE, NEUTRAL BUSSING TO BE FULL SIZE AND RECTANGULAR.
4. WHERE PANEL IS INDICATED TO INCLUDE AN I/G BUS, PROVIDE PANELBOARDS WITH AN ISOLATED GROUND BUS, DRILLED AND TAPPED FOR NUMBER OF ISOLATED GROUND CONDUCTORS SHOWN, AS WELL AS FOR ALL SPARES AND SPACES SHOWN ON THE PANELBOARD.
5. WHERE PANEL CIRCUIT BREAKER RATING IS SHOWN AS SERIES RATED, PROVIDE CIRCUIT BREAKERS IN PANELBOARD WHICH ARE SERIES RATED WITH THE UPSTREAM SYSTEM FOR THE AVAILABLE FAULT CURRENT. THE PANELBOARD SHALL BE MARKED WITH THE SERIES CONNECTED RATINGS, AS WELL AS ALL MARKING AS REQUIRED BY THE NEC, OR CEC WHERE ADOPTED, 240-83(C).
6. WHERE PANEL IS INDICATED AS RECESSED OR FLUSH MOUNTED, PROVIDE SPARE CONDUITS STUBBED UP INTO THE ACCESSIBLE CEILING SPACE. PROVIDE ONE (1) 3/4" CONDUIT ONLY FOR EACH THREE (3) SPARES OR SPACES, MINIMUM OF TWO (2). EACH CONDUIT SHALL BE TAGGED, CAPPED AND MARKED FOR FUTURE USE.
7. ALL BUSSING SHALL BE TIN PLATED ALUMINUM.
8. ALL CIRCUIT BREAKERS USED AS SWITCHES SHALL BE UL LISTED AND LABELED "SWD" FOR SWITCHING DUTY.
9. PROVIDE BREAKER INTERLOCK WITH ADJACENT BREAKER(S) FOR ANY MULTI-WIRE BRANCH CIRCUIT. BREAKER INTERLOCK GROUPING SHALL BE BY BRANCH CIRCUIT GROUP (i.e. MULTIPLE CIRCUITS SHARING A COMMON NEUTRAL (NEC, OR CEC WHERE ADOPTED, 210.4 (B).) COMMON YOKE (NEC, OR CEC WHERE ADOPTED, 210.7(B) .) OR FURNITURE SYSTEM NEC OR CEC WHERE ADOPTED, 605.6 AND 605.7), WHERE AN EXISTING PANEL IS BEING ALTERED OR MODIFIED IN ANY WAY, CONTRACTOR SHALL INCLUDE ALL COSTS IN BASE BID TO ADD BREAKER INTERLOCKS TO EXISTING MULTI-WIRE BRANCH CIRCUITS BASED ON CONTRACTOR'S INVESTIGATION OF EXISTING CONDITIONS.
10. PROVIDE BREAKER LOCK OFF DEVICE ON ANY CIRCUIT BREAKER FEEDING A TRANSFORMER AS REQUIRED, PER NEC, OR CEC WHERE ADOPTED, 450.14. WHERE AN EXISTING PANEL IS BEING ALTERED OR MODIFIED IN ANY WAY, CONTRACTOR SHALL INCLUDE ALL COSTS IN BASE BID TO ADD BREAKER LOCK-OFF DEVICES TO EXISTING TRANSFORMER CIRCUIT BREAKERS BASED ON CONTRACTOR'S INVESTIGATION OF EXISTING CONDITIONS.
11. ALL CIRCUIT BREAKERS SHALL BE BOLT-ON TYPE AND SHALL BE SUITABLE FOR 75 DEGREE AMPACITY CONDUCTORS.
12. PANELS SHALL BE OF THE DEAD FRONT SAFETY TYPE. PANELS SHALL BE MINIMUM 20" WIDE AND 5-3/4" DEEP UNLESS OTHERWISE NOTED ON PLAN.
13. COORDINATE WITH APPLICABLE TRADE TO INSURE RECESSED MOUNTED PANELBOARDS WILL SEAT FLUSH IN THE WALLS PROVIDED. PANEL TRIMS SHALL HAVE CONCEALED DOORS AND FASTENERS WITH FLUSH TYPE COMBINATION LOCK AND CATCH. TWO MILLED TYPE KEYS SUPPLIED WITH EACH PANEL. ALL LOCKS SHALL BE KEYED ALIKE AND EACH DOOR SHALL HAVE A PLASTIC COVERED DIRECTORY FRAME WITH A TYPED IDENTIFICATION CARD OF ALL CIRCUIT AND PANEL NUMBERS FOR BRANCH CIRCUIT PANELBOARDS.
14. UPON PROJECT COMPLETION, CONTRACTOR SHALL INSTALL TYPED AS-BUILT PANEL DIRECTORIES IN EACH PANEL WITHIN THE MFGR-PROVIDED DIRECTORY HOLDER. THE DIRECTORY SHALL CLEARLY IDENTIFY EACH CIRCUIT TO ITS CLEAR, EVIDENT, AND SPECIFIC PURPOSE OR USE. EACH CIRCUIT IDENTITY SHALL INCLUDE SUFFICIENT DETAIL TO ALLOW EACH CIRCUIT TO BE DISTINGUISHED FROM ALL OTHERS PER NEC, OR CEC WHERE ADOPTED, ART 408.1 AND 408.4. HANDWRITTEN DIRECTORIES ARE UNACCEPTABLE. COPIES OF AS-BUILT PANEL SCHEDULES SHALL BE PLACED IN PANEL DIRECTORIES. E.C. TO INCLUDE ALL COSTS REQUIRED FOR LARGER-THAN-STANDARD CUSTOM PANEL DIRECTORY HOLDERS TO ACCOMMODATE COPIES OF AS-BUILT PANEL SCHEDULES.
15. PANELBOARDS SHALL BE MANUFACTURED BY G.E., CUTLER-HAMMER, SIEMENS, OR SQUARE "D". FUSED PANEL BOARDS SHALL BE BY COOPER BUSSMANN.
16. PROVIDE SHOP DRAWING SUBMITTAL PER THE ELECTRICAL SPECIFICATION SUBMITTAL REQUIREMENTS FOR EACH PANEL DEPICTING CONFORMANCE WITH THE ABOVE NOTES AND SCHEDULES.

SPECIFIC PANEL SCHEDULE NOTES:

"A" PROVIDE LOCK-ON DEVICE.

"B" PROVIDE LOCK-OFF DEVICE.

"C" PROVIDE SHUNT TRIP DEVICE.

"D" PROVIDE GFCI TYPE DEVICE.

"E" PROVIDE A RED CIRCUIT BREAKER.

"F" PROVIDE A NEW BREAKER TO MATCH THE EXISTING IN PANEL.

"G" EXISTING BREAKER WITH NEW LOAD.

"H" PROVIDE RELAY AS REQUIRED FOR CONTROL OF EXTERIOR LIGHTING BY PHOTOCELL ON / TIMECLOCK OFF. MOUNT RELAY IN SEPARATE BARRIERED COMPARTMENT OF PANELBOARD.

PANEL SCHEDULE INDEX		
XXXX	RLA	RHA
XXXX	RLB	XXXX
XXXX	XXXX	XXXX

IDENTIFICATION STAMP
DIV. OF THE STATE ARCHITECT
APP: 02-118630 INC:
REVIEWED FOR
SS ☐ FLS ☐ ACS ☑
DATE: 04/13/2021

OFFICE OF THE STATE FIRE MARSHAL
APPROVED FIRE AND PANIC ONLY
Approval of this plan does not authorize or approve any omission or deviation from applicable regulations. Final approval is subject to field inspection. One set of approved plans shall be available on the project site at all times.
PERMIT NO: 28 N 2332-CP
REVIEWED BY: LEO CATALLO, OSFM
DATE: 4 / /2021

DGS
GENERAL SERVICES
Department of General Services
State of California
Real Estate Services Division
Project Management & Development Branch
707 Third Street, Suite 4-105
West Sacramento, California 95605

NICHOLS MELBURG & ROSSETTO
ARCHITECTS + ENGINEERS
300 Knollcrest Drive
Redding, CA. 96002
(530) 222-3300 (530) 222-3538 FAX
http://www.nmrdesign.com

Copyright © 2019
All ideas, designs, arrangements and plans indicated or represented by this drawing are owned by, and the property of, NICHOLS, MELBURG and ROSSETTO and were created, evolved and developed for use on, and in conjunction with, the specified project. None of such ideas, designs, arrangements or plans shall be used by, or disclosed to any person, firm or corporation for any purpose whatsoever without the written permission of NICHOLS, MELBURG and ROSSETTO

LICENSE STAMPS

REGISTERED PROFESSIONAL ENGINEER RAYMOND W. SWOPE No. E15610 12/31/2021 ELECTRICAL STATE OF CALIFORNIA
Date Signed: 3/25/2021

CONSULTANT
tk1sc COLLABORATIVE
11870 Pierce Street, Suite 160
Riverside, California 92505
951.299.4160 www.tk1sc.com
Project Leader - Jerry Leonhardt
Electrical Lead - Reid Cordry
tk1sc Job #:2019-0228A

DRAWING STATUS
CONSTRUCTION DOCUMENTS

ISSUE

No.	Date	Description
1	10/20/2020	INITIAL PLAN REVIEW
2	01/22/2021	AGENCY RESUBMITTAL
3	03/22/2021	AGENCY RESUBMITTAL

If drawing is not 30" x 42" it is a reduced print

PROJECT
RESIDENTIAL CENTER, UKIAH: REPLACEMENT OF EXISTING RESIDENTIAL CENTER
440 EAST HILL ROAD
WILLITS, CALIFORNIA 95490
MENDOCINO COUNTY
CALIFORNIA CONSERVATION CORP

Supervisor	Designed	Drawn
		Author

DSA Application No.
XX-XXXXXX

SHEET TITLE
RECREATION BUILDING PANEL SCHEDULES

DGS Project Number: XXXXX
NMR Project Number: 18-6456

Reference North: NORTH
Sheet Scale: 12" = 1'-0"
Sheet Number: E407R

ISSUE DATE
July 9, 2021

Plot Date: 3/24/2021 9:40:00 AM
File Name: BIM 360://CCC Willits Residential Center/E_CCC Willits_REC_2019-0228A.rvt

STATE OF CALIFORNIA
Indoor Lighting
NRCC-LTI-E
CALIFORNIA ENERGY COMMISSION

CERTIFICATE OF COMPLIANCE			NRCC-LTI-E
Project Name:	Replacement of Existing Residential Center	**Report Page:**	**(Page 6 of 7)**
Project Address:	440 East Hill Road	**Date Prepared:**	10/20/2020

T. DECLARATION OF REQUIRED CERTIFICATES OF INSTALLATION

Selections have been made based on information provided in this document. If any selection have been changed by permit applicant, an explanation should be included in Table E. Additional Remarks. These documents must be provided to the building inspector during construction and can be found online at https://www.energy.ca.gov/title24/2019standards/2019_compliance_documents/Nonresidential_Documents/NRCI/

Yes	No	Form/Title	Field Inspector Pass	Field Inspector Fail
●	○	NRCI-LTI-01-E - Must be submitted for all buildings	☐	☐
○	●	NRCI-LTI-02-E- Must be submitted for a lighting control system, or for an Energy Management Control System (EMCS), to be recognized for compliance.	☐	☐
○	●	NRCI-LTI-04-E - Must be submitted for two interlocked systems serving an auditorium, a convention center, a conference room, a multipurpose room or a theater to be recognized for compliance.	☐	☐
○	●	NRCI-LTI-05-E- Must be submitted for a Power Adjustment Factor (PAF) to be recognized for compliance.	☐	☐
○	●	NRCI-LTI-06-E- Must be submitted for additional wattage installed in a video conferencing studio to be recognized for compliance.	☐	☐

U. DECLARATION OF REQUIRED CERTIFICATES OF ACCEPTANCE

Selections have been made based on information provided in this document. If any selection have been changed by the permit applicant, an explanation should be included in Table E. Additional Remarks. These documents must be provided to the building inspector during construction and any with "-A" in the form name must be completed through an Acceptance Test Technician Certification Provider (ATTCP). For more information visit: http://www.energy.ca.gov/title24/attcp/providers.html

Yes	No	Form/Title	Field Inspector Pass	Field Inspector Fail
●	○	NRCA-LTI-02-A - Must be submitted for occupancy sensors and automatic time switch controls.	☐	☐
○	●	NRCA-LTI-03-A - Must be submitted for automatic daylight controls.	☐	☐
●	○	NRCA-LTI-04-A - Must be submitted for demand responsive lighting controls.	☐	☐
○	●	NRCA-LTI-05-A. - Must be submitted for institutional tuning power adjustment factor (PAF)	☐	☐

Registration Number: | Registration Date/Time: | Registration Provider: EnergySoft
CA Building Energy Efficiency Standards - 2019 Nonresidential Compliance | Report Version: 2019.0.001 Schema Version: rev 20190401 | Report Generated: 2020-10-20 09:13:02

STATE OF CALIFORNIA
Indoor Lighting
NRCC-LTI-E
CALIFORNIA ENERGY COMMISSION

CERTIFICATE OF COMPLIANCE			NRCC-LTI-E
Project Name:	Replacement of Existing Residential Center	**Report Page:**	**(Page 3 of 7)**
Project Address:	440 East Hill Road	**Date Prepared:**	10/20/2020

F. INDOOR LIGHTING FIXTURE SCHEDULE

25	25 - LED Ring Fixture	No	No	75	JA8 Lamp	1	No	75	☐	☐
3	3 - LED Strip light 4'	No	No	16	JA8 Lamp	4	No	64	☐	☐
5	5 - 1x4 Recessed LED	No	No	29.8	JA8 Lamp	2	No	59.6	☐	☐
9	9 - Recessed LED Downlight	No	No	11	JA8 Lamp	43	No	473	☐	☐
							Total Designed Watts: CONDITIONED SPACES		2,486.8	

[1]*FOOTNOTE: Design Watts for small aperture and color changing luminaires which qualify per §140.6(a)4ii is adjusted to be 75% of their rated wattage. Table F automatically makes this adjustment, the permit applicant should enter full rated wattage in column 05.*

G. MODULAR LIGHTING SYSTEMS

This section does not apply to this project.

H. INDOOR LIGHTING CONTROLS (Not including PAFs)

*This table includes lighting controls for conditioned and unconditioned spaces. When an control having a * is shown, the notes section of this table provides more detail on how compliance is achieved. The lighting controls section of the Compliance Summary Table on the first page will show "DOES NOT COMPLY" if the notes are left blank.*

Building Level Controls

01	02	03 Field Inspector Pass	03 Field Inspector Fail
Mandatory Demand Response §110.12(c)	Shut-off controls §130.1(c)		
Required 10,000 SF	Whole Building Auto Time Switch	☐	☐

Area Level Controls

04	05	06	07	08	09	10	11	12 Field Inspector Pass	12 Field Inspector Fail
Area Description	Complete Building or Area Category Primary Function Area	Area Controls §130.1(a)	Multi-Level Controls §130.1(b)	Shut-Off Controls §130.1(c)	Primary/Sky lit Daylighting §130.1(d)	Secondary Daylighting §140.6(d)	Interlocked Systems §140.6(a)1		

*NOTES: Controls with a * require a note in the space below explaining how compliance is achieved.
EX: Conference 1: Primary/Skylight Daylighting: Exempt because less than 120 watts of general lighting; EXCEPTION 1 to §130.1(d)2*

13
Plan Sheet Showing Daylit Zones:

Registration Number: | Registration Date/Time: | Registration Provider: EnergySoft
CA Building Energy Efficiency Standards - 2019 Nonresidential Compliance | Report Version: 2019.0.001 Schema Version: rev 20190401 | Report Generated: 2020-10-20 09:13:02

STATE OF CALIFORNIA
Indoor Lighting
NRCC-LTI-E
CALIFORNIA ENERGY COMMISSION

CERTIFICATE OF COMPLIANCE			NRCC-LTI-E
Project Name:	Replacement of Existing Residential Center	**Report Page:**	**(Page 1 of 7)**
Project Address:	440 East Hill Road	**Date Prepared:**	10/20/2020

This document is used to demonstrate compliance with requirements in §110.9, §110.12(c), §130.0, §130.1, §140.6 and §141.0(b)2 for indoor lighting scopes using the prescriptive path.

A. GENERAL INFORMATION

01	Project Location (city)	Willits		04	Total Conditioned Floor Area (ft²)	5,330	
02	Climate Zone	2		05	Total Unconditioned Floor Area (ft²)	0	
03	Occupancy Types Within Project (select all that apply):			06	# of Stories (Habitable Above Grade)	1	
☒ Office	☐ Retail	☐ Warehouse	☐ Hotel/Motel	☐ School	☒ Support Areas		
☐ Parking Garage	☐ High-Rise Residential	☐ Relocatable	☐ Healthcare	☒ Other (Write in)	See Table I		

B. PROJECT SCOPE

This table includes any lighting systems that are within the scope of the permit application and are demonstrating compliance using the prescriptive path outlined in §140.6 or §141.0(b)2 for alterations.

Scope of Work	Conditioned Spaces		Unconditioned Spaces	
01	02	03	04	05
My Project Consists of (check all that apply):	Calculation Method	Area (ft²)	Calculation Method	Area (ft²)
☒ New Lighting System	Area Category Method	5330	Area Category Method	0
☐ New Lighting System - Parking Garage				
☐ Altered Lighting System				
Total Area of Work (ft²)	5330		0	

Registration Number: | Registration Date/Time: | Registration Provider: EnergySoft
CA Building Energy Efficiency Standards - 2019 Nonresidential Compliance | Report Version: 2019.0.001 Schema Version: rev 20190401 | Report Generated: 2020-10-20 09:13:02

STATE OF CALIFORNIA
Indoor Lighting
NRCC-LTI-E
CALIFORNIA ENERGY COMMISSION

CERTIFICATE OF COMPLIANCE			NRCC-LTI-E
Project Name:	Replacement of Existing Residential Center	**Report Page:**	**(Page 7 of 7)**
Project Address:	440 East Hill Road	**Date Prepared:**	10/20/2020

DOCUMENTATION AUTHOR'S DECLARATION STATEMENT

Documentation Author Name: Ray Swartz	Documentation Author Signature:
Company: tk1sc	Signature Date: 2020-10-20
Address: 11870 Pierce Street, Suite 160	CEA/ HERS Certification Identification (if applicable):
City/State/Zip: Riverside CA 92505	Phone: 951-299-4160

RESPONSIBLE PERSON'S DECLARATION STATEMENT

I certify the following under penalty of perjury, under the laws of the State of California:

1. The information provided on this Certificate of Compliance is true and correct.
2. I am eligible under Division 3 of the Business and Professions Code to accept responsibility for the building design or system design identified on this Certificate of Compliance (responsible designer)
3. The energy features and performance specifications, materials, components, and manufactured devices for the building design or system design identified on this Certificate of Compliance conform to the requirements of Title 24, Part 1 and Part 6 of the California Code of Regulations.
4. The building design features or system design features identified on this Certificate of Compliance are consistent with the information provided on other applicable compliance documents, worksheets, calculations, plans and specifications submitted to the enforcement agency for approval with this building permit application.
5. I will ensure that a completed signed copy of this Certificate of Compliance shall be made available with the building permit(s) issued for the building, and made available to the enforcement agency for all applicable inspections. I understand that a completed signed copy of this Certificate of Compliance is required to be included with the documentation the builder provides to the building owner at occupancy.

Responsible Designer Name: Ray Swartz	Responsible Designer Signature:
Company: tk1sc	Date Signed: 2020-10-20
Address: 11870 Pierce Street, Suite 160	License: E15610
City/State/Zip: Riverside CA 92505	Phone: 951-299-4160

Registration Number: | Registration Date/Time: | Registration Provider: EnergySoft
CA Building Energy Efficiency Standards - 2019 Nonresidential Compliance | Report Version: 2019.0.001 Schema Version: rev 20190401 | Report Generated: 2020-10-20 09:13:02

STATE OF CALIFORNIA
Indoor Lighting
NRCC-LTI-E
CALIFORNIA ENERGY COMMISSION

CERTIFICATE OF COMPLIANCE			NRCC-LTI-E
Project Name:	Replacement of Existing Residential Center	**Report Page:**	**(Page 4 of 7)**
Project Address:	440 East Hill Road	**Date Prepared:**	10/20/2020

I. LIGHTING POWER ALLOWANCE: COMPLETE BUILDING OR AREA CATEGORY METHODS

Each area complying using the Complete Building or Area Category Methods per §140.6(b) are included in this table. Column 06 indicates if additional lighting power allowances per §140.6(c) or adjustments per §140.6(a) are being used .

Conditioned Spaces

01	02	03	04	05	06	
Area Description	Complete Building or Area Category Primary Function Area	Allowed Density (W/ft²)	Area (ft²)	Allowed Wattage (Watts)	Additional Allowance / Adjustment: Area Category	Additional Allowance / Adjustment: PAF
Restroom	Restrooms	0.65	420	273	No	No
Elec/Mech/Riser	Electrical Mechanical Telephone Room	0.4	85	34	No	No
Office <= 250	Office 250 square feet or less	0.7	142	99.4	No	No
Corridor	Corridor Area	0.6	927	556.2	No	No
Storage/Other	All Other Space Types	0.4	624	249.6	No	No
Break Rooms	Lounge Breakroom or Waiting Area	0.65	2,434	1,582.1	No	No
Weight Room	Exercise/Fitness Center GymnasiumArea	0.5	698	349	No	No
		TOTALS:	5,330	3,143.3	See Tables J, or P for detail	

J. ADDITIONAL ALLOWANCE: AREA CATEGORY METHOD QUALIFYING LIGHTING SYSTEM

This section does not apply to this project.

K. TAILORED METHOD GENERAL LIGHTING POWER ALLOWANCE

This section does not apply to this project.

L. ADDITIONAL LIGHTING ALLOWANCE: TAILORED WALL DISPLAY

This section does not apply to this project.

M. ADDITIONAL LIGHTING ALLOWANCE: TAILORED FLOOR AND TASK LIGHTING

This section does not apply to this project.

Registration Number: | Registration Date/Time: | Registration Provider: EnergySoft
CA Building Energy Efficiency Standards - 2019 Nonresidential Compliance | Report Version: 2019.0.001 Schema Version: rev 20190401 | Report Generated: 2020-10-20 09:13:02

STATE OF CALIFORNIA
Indoor Lighting
NRCC-LTI-E
CALIFORNIA ENERGY COMMISSION

CERTIFICATE OF COMPLIANCE			NRCC-LTI-E
Project Name:	Replacement of Existing Residential Center	**Report Page:**	**(Page 5 of 7)**
Project Address:	440 East Hill Road	**Date Prepared:**	10/20/2020

N. ADDITIONAL LIGHTING ALLOWANCE: TAILORED ORNAMENTAL/SPECIAL EFFECTS

This section does not apply to this project.

O. ADDITIONAL LIGHTING ALLOWANCE: TAILORED VERY VALUABLE MERCHANDISE

This section does not apply to this project.

P.POWER ADJUSTMENT: LIGHTING CONTROL CREDIT (POWER ADJUSTMENT FACTOR (PAF))

This section does not apply to this project.

Q. RATED POWER REDUCTION COMPLIANCE FOR ALTERATIONS

This section does not apply to this project.

R. 80% LIGHTING POWER FOR ALLALTERATIONS - CONTROLS EXCEPTIONS

This section does not apply to this project.

S. DAYLIGHT DESIGN POWER ADJUSTMENT FACTOR (PAF)

This section does not apply to this project.

Registration Number: | Registration Date/Time: | Registration Provider: EnergySoft
CA Building Energy Efficiency Standards - 2019 Nonresidential Compliance | Report Version: 2019.0.001 Schema Version: rev 20190401 | Report Generated: 2020-10-20 09:13:02

STATE OF CALIFORNIA
Indoor Lighting
NRCC-LTI-E
CALIFORNIA ENERGY COMMISSION

CERTIFICATE OF COMPLIANCE			NRCC-LTI-E
Project Name:	Replacement of Existing Residential Center	**Report Page:**	**(Page 2 of 7)**
Project Address:	440 East Hill Road	**Date Prepared:**	10/20/2020

C. COMPLIANCE RESULTS

If any cell on this table says "DOES NOT COMPLY" or "COMPLIES with Exceptional Conditions" refer to Table D. for guidance.

Lighting in conditioned and unconditioned spaces must be combined for compliance per §140.6(b)1	Allowed Lighting Power per §140.6(b) (Watts) 01 Complete Building §140.6(c)1 (See Table I)	02 Area Category §140.6(c)2 (See Table I)	03 Area Category Additional §140.6(c)2(G) (+) (See Table J)	04 Tailored §140.6(c)3 (+) (See Table K)	05	Total Allowed (Watts)		Adjusted Lighting Power per §140.6(a) (Watts) 06 Total Designed (Watts) (See Table F)	07 Adjustments PAF Lighting Control Credits §140.6(a)2 (-) (See Table P)		08 Total Adjusted (Watts) *Includes Adjustments	Compliance Results 09
Conditioned	0	3,143.3	0	0	=	3143.3	≥	2,486.8	0	=	2486.8	**05 must be >= 08 §140.6**
Unconditioned	0	0	0	0	=		≥	0	0	=		COMPLIES
											Controls Compliance (See Table H for Details)	COMPLIES
											Rated Power Reduction Compliance (See Table Q for Details)	

D. EXCEPTIONAL CONDITIONS

This table is auto-filled with uneditable comments because of selections made or data entered in tables throughout the form.

E. ADDITIONAL REMARKS

This table includes remarks made by the permit applicant to the Authority Having Jurisdiction.

F. INDOOR LIGHTING FIXTURE SCHEDULE

This table includes all permanent designed lighting and all portable lighting in offices.

Designed Wattage: Conditioned Spaces

01 Name or Item Tag	02 Complete Luminaire Description	03 Modular (Track) Fixture	04 Small Aperture & Color Change[1]	05 Watts per luminaire[2]	06 How is Wattage determined	07 Total Number of Luminaires	08 Exempt per §140.6(a)3	09 Design Watts	10 Field Inspector Pass	10 Field Inspector Fail
1	1 -2x4 LED	No	No	31.2	JA8 Lamp	51	No	1,591.2	☐	☐
19	19 - Linear LED	No	No	16	JA8 Lamp	14	No	224	☐	☐

Registration Number: | Registration Date/Time: | Registration Provider: EnergySoft
CA Building Energy Efficiency Standards - 2019 Nonresidential Compliance | Report Version: 2019.0.001 Schema Version: rev 20190401 | Report Generated: 2020-10-20 09:13:02

TITLE 24 GENERAL NOTE

CONTRACTOR SHALL BE RESPONSIBLE FOR ALL WORK ASSOCIATED WITH FINAL INSPECTION AND APPLICABLE ACCEPTANCE REQUIREMENT PROCEDURES. INCLUDE ALL COSTS IN THE BASE BID. THIS SHALL INCLUDE, BUT NOT BE LIMITED TO, CONSTRUCTION INSPECTION, MEASUREMENTS, MONITORING, FUNCTIONAL TESTING, CALIBRATING, ETC. CONTRACTOR SHALL ASSUME THE ROLE OF "FIELD TECHNICIAN" AND "RESPONSIBLE PERSON" AS DEFINED IN STATE OF CALIFORNIA 2019 BUILDING ENERGY EFFICIENCY STANDARDS NONRESIDENTIAL COMPLIANCE MANUAL SECTION 13.2.2.

SEE STATE OF CALIFORNIA 2019 BUILDING ENERGY EFFICIENCY STANDARDS SECTIONS 10-103(a)3A AND 10-103(a)3B AND SECTION 130.4 FOR MORE INFORMATION.

SEE STATE OF CALIFORNIA 2019 BUILDING ENERGY EFFICIENCY STANDARDS NONRESIDENTIAL COMPLIANCE MANUAL CHAPTER 13 FOR MORE DETAILED REQUIREMENTS / INFORMATION.

SEE STATE OF CALIFORNIA 2019 BUILDING ENERGY EFFICIENCY STANDARDS RESIDENTIAL COMPLIANCE MANUAL CHAPTER 2 FOR MORE DETAILED REQUIREMENTS / INFORMATION.

PROVIDE COMPLETED INSTALLATION CERTIFICATE(S) AND CERTIFICATE(S) OF ACCEPTANCE AS REQUIRED TO THE SATISFACTION OF THE ENFORCEMENT AGENCY.

TITLE 24 PROCEDURES FOR TESTING AND ADJUSTING

CONTRACTOR SHALL BE RESPONSIBLE FOR ALL WORK ASSOCIATED WITH FINAL INSPECTION AND APPLICABLE ACCEPTANCE REQUIREMENT PROCEDURES. INCLUDE ALL COSTS IN THE BASE BID. THIS SHALL INCLUDE, BUT NOT BE LIMITED TO, CONSTRUCTION INSPECTION, MEASUREMENTS, MONITORING, FUNCTIONAL TESTING, CALIBRATING, ETC. CONTRACTOR SHALL ASSUME THE ROLE OF "FIELD TECHNICIAN" AND "RESPONSIBLE PERSON" AS DEFINED IN STATE OF CALIFORNIA 2019 BUILDING ENERGY EFFICIENCY STANDARDS NONRESIDENTIAL COMPLIANCE MANUAL SECTION 13.2.2.

LIGHTING CONTROL ACCEPTANCE TESTING AND ADJUSTING PROCEDURES – REFER TO NRCA-LTI-02-A DOCUMENTS.

AUTOMATIC DAYLIGHT CONTROL ACCEPTANCE TESTING AND ADJUSTING PROCEDURES – REFER TO NRCA-LTI-03-A DOCUMENTS.

DEMAND RESPONSE LIGHTING CONTROL ACCEPTANCE TESTING AND ADJUSTING PROCEDURES – REFER TO NRCA-LTI-04-A DOCUMENTS.

INSTITUTIONAL TUNING PAF ACCEPTANCE TESTING AND ADJUSTING PROCEDURES – REFER TO NRCA-LTI-05-A DOCUMENTS.

OUTDOOR LIGHTING CONTROL ACCEPTANCE TESTING AND ADJUSTING PROCEDURES – REFER TO NRCA-LTO-02-A DOCUMENTS.

ALL LIGHTING CONTROLS TESTING AND ADJUSTING DOCUMENTS NOTED ABOVE ARE AVAILABLE FROM THE CALIFORNIA ENERGY COMMISSION WEB SITE AT:

https://ww2.energy.ca.gov/title24/2019standards/2019_compliance_documents/Nonresidential_Documents/NRCA/

IDENTIFICATION STAMP
DIV. OF THE STATE ARCHITECT
APP: 02-118630 INC:
REVIEWED FOR
SS ☐ FLS ☐ ACS ☑
DATE: 04/13/2021

OFFICE OF THE STATE FIRE MARSHAL
APPROVED FIRE AND PANIC ONLY
Approval of this plan does not authorize or approve any omission or deviation from applicable regulations. Final approval is subject to field inspection. One set of approved plans shall be available on the project site at all times.
PERMIT NO.: 28-N-3332-CP
REVIEWED BY: LEO CATALLO, OSFM
DATE: 4/1/2021

DGS GENERAL SERVICES
Department of General Services
State of California
Real Estate Services Division
Project Management & Development Branch
707 Third Street, Suite 4-105
West Sacramento, California 95605

NICHOLS MELBURG & ROSSETTO ARCHITECTS + ENGINEERS
300 Knollcrest Drive
Redding, CA. 96002
(530) 222-3300 (530) 222-3538 FAX
http://www.nmrdesign.com

Copyright © 2019
All ideas, designs, arrangements and plans indicated or represented by this drawing are owned by, and the property of, NICHOLS, MELBURG and ROSSETTO and were created, evolved and developed for use on, and in connection with, the specified project. None of such ideas, designs, arrangements or plans shall be used by, or disclosed to, any person, firm or corporation for any purpose whatsoever without the written permission of NICHOLS, MELBURG and ROSSETTO.

LICENSE STAMPS

REGISTERED PROFESSIONAL ENGINEER RAYMOND W. SWARTZ No. E15610 12/31/2021 ELECTRICAL STATE OF CALIFORNIA
Date Signed: 3/25/2021

CONSULTANT
tk1sc COLLABORATIVE
11870 Pierce Street, Suite 160
Riverside, California 92505
951.299.4160 www.tk1sc.com
Project Leader - Jerry Leonhardt
Electrical Lead - Reid Cordry
tk1sc Job #:2019-0228A

DRAWING STATUS
CONSTRUCTION DOCUMENTS

ISSUE

No.	Date	Description
1	10/20/2020	INITIAL PLAN REVIEW
2	01/22/2021	AGENCY RESUBMITTAL
3	03/22/2021	AGENCY RESUBMITTAL

If drawing is not 30" x 42" it is a reduced print

PROJECT
RESIDENTIAL CENTER, UKIAH: REPLACEMENT OF EXISTING RESIDENTIAL CENTER
440 EAST HILL ROAD
WILLITS, CALIFORNIA 95490
MENDOCINO COUNTY
CALIFORNIA CONSERVATION CORP

Supervisor	Designed	Drawn
		Author

DSA Application No.
02-118630

SHEET TITLE
TITLE 24 RECREATION BUILDING

DGS Project Number	NMR Project Number
000000000001826	18-6456

Reference North: NORTH | Sheet Scale

Sheet Number
E505R

ISSUE DATE
July 9, 2021

Plot Date: 3/22/2021 9:00:09 AM
File Name: BIM 360://CCC Willits Residential Center/E_CCC Willits_COMMON_2019-0228A.rvt

IDENTIFICATION STAMP
DIV. OF THE STATE ARCHITECT
APP: 02-118630 INC:
REVIEWED FOR
SS ☐ FLS ☐ ACS ☑
DATE: 04/13/2021

KEYNOTES

2.025 CONNECT TO CEILING FAN PER MANUFACTURER'S REQUIREMENTS.

3.001 RECEPTACLE, SWITCH, AND LIGHT FIXTURE MOUNTED ABOVE CEILING. PROVIDE A KEYLESS PLASTIC LAMP HOLDER LEVITON #R50-08829-CW4, OR EQUAL, MOUNTED ON A JUNCTION BOX WITH ONE LED A19 9W LAMP. COORDINATE AND VERIFY EXACT MOUNTING LOCATION IN FIELD WITH MECHANICAL EQUIPMENT INSTALLER PRIOR TO ROUGH IN.

LIGHTING PLAN GENERAL NOTES:

1. REFER TO ARCHITECTURAL PLANS FOR EXACT LOCATION AND ELEVATION OF ALL LIGHTING FIXTURES AND ALL DEVICES. ALL WALL-MOUNTED DEVICE HEIGHTS SHALL BE VERIFIED WITH THE ARCHITECT PRIOR TO ROUGH-IN.
2. VERIFY EXACT CEILING CONSTRUCTION WITH ARCHITECTURAL REFLECTED CEILING PLAN AND PROVIDE LIGHTING FIXTURES WITH ALL NECESSARY MOUNTING HARDWARE.
3. ALL RECESSED FIXTURES SHALL BE PROVIDED WITH ALL REQUIRED STRUCTURAL SUPPORTS AS REQUIRED BY THE CURRENTLY ADOPTED ISSUE OF THE CBC IN ADDITION TO ANY LOCAL CODES
4. ALL COVE MOUNTED FIXTURES SHALL EXTEND THE FULL LENGTH OF THE COVE. CONTRACTOR TO FIELD MEASURE COVE LENGTH AND ORDER QUANTITY OF FIXTURES AS REQUIRED.
5. ALL DIMMING BRANCH CIRCUITS SHALL BE PROVIDED WITH A DEDICATED NEUTRAL CONDUCTOR FOR EACH ZONE/CHANNEL.
6. ALL FLUORESCENT DIMMING ZONES/CHANNELS SHALL BE PROVIDED WITH 3 LINE VOLTAGE CONDUCTORS (NEUTRAL, DIMMED HOT, SWITCHED HOT) OR 2 LINE VOLTAGE CONDUCTORS/2 CONTROL CONDUCTORS AS REQUIRED BY THE CONTROL/BALLAST TYPE.
7. ALL EMERGENCY BATTERY PACK FIXTURES SHALL BE PROVIDED WITH A CONSTANT HOT CONNECTION TO THE CHARGING LEAD. SEE GENERAL LIGHTING FIXTURE SCHEDULE NOTES FOR MORE INFORMATION.
8. REFER TO ARCHITECTURAL REFLECTED CEILING PLANS FOR EXIT SIGN CHEVRONS AND NUMBER OF FACES PER EXIT SIGN. ANY DISCREPANCIES BETWEEN EXIT SIGNS SHOWN ON THE ELECTRICAL AND ARCHITECTURAL PLANS SHALL BE BROUGHT TO THE ATTENTION OF THE ARCHITECT PRIOR TO ORDERING EXIT SIGNS.
9. WHEN EXPOSED CEILINGS OR OPEN GRID CONDITIONS OCCUR, THE CONTRACTOR WILL NEED TO PROVIDE THE FOLLOWING ITEMS:
   - ALL BRANCH CIRCUITS SHALL BE IN EMT.
   - ALL BRANCH CIRCUITS SHALL BE ROUTED, NEATLY TRAINED, AND IN PARALLEL TO STRUCTURES OR DUCT WORK. THE TERM "TRAINED" MEANS ALL PARALLEL CONDUITS SHALL MAINTAIN THE SAME SPATIAL RELATIONSHIP WITH EACH OTHER FOR ENTIRE RUN TO INCLUDE RADIUS BENDS AND SWEEPS.
   - VISUALLY OBJECTIONABLE BRANCH CIRCUITS WILL BE REROUTED AT THE REQUEST OF THE ARCHITECT AT NO ADDITIONAL COST.
10. ALL LED REMOTE INDICATORS FOR DUCT DETECTORS AND FIRE/SMOKE DAMPERS REQUIRED BY THE SFM SHALL BE LOCATED IN CEILINGS IN COORDINATION WITH ARCHITECT PRIOR TO ANY ROUGH-IN.
11. RECESSED FIXTURES LOCATED IN A FIRE-RATED CEILING OR WALL SHALL BE PROVIDED WITH A 5-SIDED RATED ENCLOSURE SO CONSTRUCTED AS TO ALLOW CODE AND MANUFACTURER-REQUIRED CLEARANCES BETWEEN THE FIXTURE AND THE ENCLOSURE.
12. PROVIDE REDUNDANT GROUND PATH IN ALL BRANCH CIRCUITS SERVING PATIENT CARE AREAS CONSISTING OF A SEPARATE, INSULATED EQUIPMENT GROUNDING CONDUCTOR PER NEC, OR CEC WHERE ADOPTED, ART 517.13.
13. PROVIDE ADDITIONAL J-BOX NEAR PANEL FOR MULTIPLE HOMERUN CIRCUITRY.
14. UNLESS SPECIFICALLY SHOWN AS (E), (R), (ER), (D), EXISTING OR NON-BOLD, ALL ELECTRICAL DEVICES SHOWN ARE NEW.
15. REFER TO GENERAL POWER PLAN NOTES AND COMMUNICATIONS PATHWAYS GENERAL NOTES FOR ADDITIONAL REQUIREMENTS WHEN POWER AND/OR DATA DEVICES ARE SHOWN ON THIS PLAN.
16. CONTRACTOR SHALL PROVIDE CONDUIT AND WIRE FOR ALL DEVICES TO PANELBOARD(S) INDICATED ON PLANS FOR A COMPLETE AND OPERABLE SYSTEM.
17. CONTRACTOR SHALL PROVIDE MINIMUM 2#12, 1#12G IN ½" CONDUIT UNLESS OTHERWISE NOTED. REFERENCE WIRE SIZE TABLE CHART ABOVE. WHERE REQUIRED, CONDUIT AND WIRE SHALL BE UPSIZED TO MEET THE REQUIREMENT OF THE DEVICE BEING SERVED BY THE BRANCH CIRCUIT. WHERE CONDUIT AND WIRING IS INDICATED AT THE HOME RUN, WIRING AND CONDUIT SHALL CONTINUE AT THAT SIZE FOR THE ENTIRE LENGTH OF THE CIRCUIT.
18. CONTRACTOR SHALL FURNISH ADDITIONAL SWITCHLEGS OR HOT WIRES AS REQUIRED TO MEET THE CONTROL INTENT OF THE DOCUMENTS AND AS REQUIRED BY CODE (I.E. EMERGENCY LIGHTING AND SWITCHED RECEPTACLES).
19. MULTIPLE CIRCUITS MAY BE USED IN A SINGLE RACEWAY. NO MORE THAN (3) DEDICATED CIRCUITS OR (4) CURRENT CARRYING CONDUCTORS SHALL BE INSTALLED IN ANY RACEWAY UNLESS OTHERWISE NOTED. WHERE A COMMON GROUNDED CONDUCTOR IS USED FOR MULTIPLE INDIVIDUAL BRANCH CIRCUITS, PER SECTIONS CEC 200.4, 250.122, 310.15(B)(2), CONDUIT SIZE SHALL BE INCREASED AS REQUIRED FOR THE CONDUCTORS INCLUDING TEMPERATURE DERATING PER CEC TABLE C1.
20. FURNISH AND INSTALL JUNCTION BOXES AS REQUIRED TO MEET MAXIMUM BEND REQUIREMENTS FOR PULLING WIRES PER CEC 358.26. JUNCTION BOXES SHALL BE SIZED AS REQUIRED PER CEC 314.28 UNLESS OTHERWISE NOTED.

WALL TYPES LEGEND

SEE SHEET G121 FOR ASSEMBLY TYPES

EXTERIOR

2 x 6 WOOD STUD WALL - NON RATED	0-W1-6 / * ● #
2 x 12 WOOD STUD WALL - NON RATED	0-W1-12 / * ● #

INTERIOR

2 x 4 WOOD STUD WALL - NON RATED	0-W2-4 / * ● #
2 x 6 WOOD STUD WALL - NON RATED	0-W2-6 / * ● #
2 x 8 WOOD STUD WALL - NON RATED	0-W2-8 / * ● #
2 x 12 WOOD STUD WALL - NON RATED	0-W2-12 / * ● #
2 x 4 WOOD STUD WALL - ACOUSTIC	0-W5-4 / * ● #
2 x 6 WOOD STUD WALL - ACOUSTIC	0-W5-6 / * ● #
2 X 4 WOOD STUD WALL - 1-HR FIRE PARTITION W/ PROTECTED OPENINGS	1-W3-4 / * ● #
2 X 6 WOOD STUD WALL - 1-HR FIRE PARTITION W/ PROTECTED OPENINGS	1-W3-6 / * ● #

WALL TYPE NOTES

PARTITION SYMBOL

#-#-# / * #
- FIRE-RESISTIVE RATING
- ASSEMBLY DETAIL NUMBER
- NOMINAL STUD SIZE
- # = SPECIAL CONDITIONS
- * = PARTITION HEIGHT

VOLTAGE DROP WORKSHEET: REFERENCE ONLY

1. ALL BRANCH CIRCUITS ARE DESIGNED TO LIMIT VOLTAGE DROP 3% OR LESS USING THE FOLLOWING CRITERIA:

208 VOLT, 1 PHASE LOAD:

LOAD (VA)	DISTANCE	CU CONDUCTOR SIZE
0-1000 VA (500 PER PHASE) 0-4.8 AMPS	0-225 FT	#12
	226-360 FT	#10
	361-572 FT	#8
1001-2000 VA (1,000 PER PHASE) 4.8-9.6 AMPS	0-151 FT	#12
	152-240 FT	#10
	241-380 FT	#8
	381-604 FT	#6
2001-3,328 VA (1,664 PER PHASE) 9.6-16 AMPS	0-78 FT	#12
	79-125 FT	#10
	126-198 FT	#8
3329-4,992 VA (2,496 PER PHASE) 16-24 AMPS	0-52 FT	#12
	53-83 FT	#10
	84-132 FT	#8

120 VOLT, 1 PHASE LOAD:

LOAD (VA)	DISTANCE	CU CONDUCTOR SIZE
0-1000 VA 0-8 AMPS	0-130 FT	#12
	131-205 FT	#10
	205-330 FT	#8
1001-1500 VA 8-12.5 AMPS	0-87 FT	#12
	88-138 FT	#10
	139-219 FT	#8
	220-350 FT	#6
1501-1920 VA 12.5-16 AMPS	0-68 FT	#12
	69-108 FT	#10
	109-172 FT	#8
	173-273 FT	#6
1921-2880 VA 16-24 AMPS	0-72 FT	#10
	73-114 FT	#8
	115-182 FT	#6

ANY 3 PHASE LOADS GREATER THAN 30 AMPS ARE SHOWN ON THE FEEDER SCHEDULE OR MOTORIZED EQUIPMENT SCHEDULE WITH ASSOCIATED VOLTAGE DROP LIMITED TO 2% OR LESS.

NORTH

WAREHOUSE BUILDING LIGHTING PLAN

SCALE: 1/8" = 1'-0"

OFFICE OF THE STATE FIRE MARSHAL
APPROVED FIRE AND PANIC ONLY
Approval of this plan does not authorize or approve any omission or deviation from applicable regulations. Final approval is subject to field inspection. One set of approved plans shall be available on the project site at all times.
PERMIT NO.: 20-N-2332-CP
REVIEWED BY: LITO CATAYLO, OSFM
DATE: 4/1/2021

GENERAL SERVICES
Department of General Services
State of California
Real Estate Services Division
Project Management & Development Branch
707 Third Street, Suite 4-105
West Sacramento, California 95605

NICHOLS MELBURG & ROSSETTO
ARCHITECTS + ENGINEERS
300 Knollcrest Drive
Redding, CA. 96002
(530) 222-3300 (530) 222-3538 FAX
http://www.nmrdesign.com

Copyright © 2019
All ideas, designs, arrangements and plans indicated or represented by this drawing are owned by, and the property of, NICHOLS, MELBURG and ROSSETTO and were created, evolved and developed for use on, and in conjunction with, the specified project. None of such ideas, designs, arrangements or plans shall be used by, or disclosed to any person, firm or corporation for any purpose whatsoever without the written permission of NICHOLS, MELBURG and ROSSETTO.

LICENSE STAMPS
REGISTERED PROFESSIONAL ENGINEER RAYMOND W. SWARTZ No. E15610 Exp. 12/31/2021 ELECTRICAL STATE OF CALIFORNIA
Date Signed: 3/25/2021

CONSULTANT
tk1sc COLLABORATIVE
11870 Pierce Street, Suite 160
Riverside, California 92505
951.299.4160 www.tk1sc.com
Project Leader - Jerry Leonhardt
Electrical Lead - Reid Cordry
tk1sc Job #:2019-0228A

DRAWING STATUS
CONSTRUCTION DOCUMENTS

ISSUE

No.	Date	Description
1	10/20/2020	INITIAL PLAN REVIEW
2	01/22/2021	AGENCY RESUBMITTAL
3	03/22/2021	AGENCY RESUBMITTAL

If drawing is not 30" x 42" it is a reduced print

PROJECT
RESIDENTIAL CENTER, UKIAH: REPLACEMENT OF EXISTING RESIDENTIAL CENTER
440 EAST HILL ROAD
WILLITS, CALIFORNIA 95490
MENDOCINO COUNTY
CALIFORNIA CONSERVATION CORP

Supervisor	Designed	Drawn
		Author

DSA Application No.
XX-XXXXXX

SHEET TITLE
WAREHOUSE BUILDING LIGHTING PLAN

DGS Project Number	NMR Project Number
XXXXX	18-6456

Reference North: NORTH
Sheet Scale: As indicated
Sheet Number: E101W

ISSUE DATE
July 9, 2021

Plot Date: 3/22/2021 9:30:49 AM
File Name: BIM 360://CCC Willits Residential Center/E_CCC Willits_WAREHOUSE_2019-0228A.rvt

IDENTIFICATION STAMP
DIV. OF THE STATE ARCHITECT
APP: 02-118630 INC:
REVIEWED FOR
SS ☐ FLS ☐ ACS ☑
DATE: 04/13/2021

OFFICE OF THE STATE FIRE MARSHAL
APPROVED FIRE AND PANIC ONLY
Approval of this plan does not authorize or approve any omission or deviation from applicable regulations. Final approval is subject to field inspection. One set of approved plans shall be available on the project site at all times.
PERMIT NO.: 20-N-2332-CP
REVIEWED BY: LITO CATAYLO, OSFM
DATE: 4/1 /2021

Luminaire Schedule					
Symbol	Qty	Label	Arrangement	Description	BUG Rating
	2	Type1em	SINGLE	Cooper Metalux 24RLN-LD5-42-UNV-L835-CD1-U-EL14	B2-U0-G1
	13	Type9em	SINGLE	Cooper Halo Commercial HC610D010-HM612835-61WDWF	B1-U0-G0
	11	Type 18em	SINGLE	Cooper Metalux LHB-12-UNV-L840-CD-U-EL14	B3-U0-G1

Calculation Summary							
Label	CalcType	Units	Avg	Max	Min	Avg/Min	Max/Min
Area1	Illuminance	Fc	5.11	8.2	1.9	2.69	4.32
Area2	Illuminance	Fc	3.94	7.3	0.6	6.57	12.17
Hall W101_Floor	Illuminance	Fc	6.97	9.9	3.9	1.79	2.54
Shop Staging_Floor	Illuminance	Fc	1.61	4.6	0.2	8.05	23.00
Warehouse_Floor	Illuminance	Fc	1.36	6.9	0.4	3.40	17.25

WAREHOUSE BUILDING EMERGENCY LIGHTING PHOTOMETRIC PLAN

NORTH

SCALE: 1/8" = 1'-0"

DGS GENERAL SERVICES
Department of General Services
State of California
Real Estate Services Division
Project Management & Development Branch
707 Third Street, Suite 4-105
West Sacramento, California 95605

NICHOLS MELBURG & ROSSETTO
ARCHITECTS + ENGINEERS
300 Knollcrest Drive
Redding, CA. 96002
(530) 222-3300 (530) 222-3538 FAX
http://www.nmrdesign.com

Copyright © 2019
All ideas, designs, arrangements and plans indicated or represented by this drawing are owned by, and the property of, NICHOLS, MELBURG and ROSSETTO and were created, evolved and developed for use on, and in conjunction with, the specified project. None of such ideas, designs, arrangements or plans shall be used by, or disclosed to any person, firm or corporation for any purpose whatsoever without the written permission of NICHOLS, MELBURG and ROSSETTO.

LICENSE STAMPS

REGISTERED PROFESSIONAL ENGINEER
RAYMOND W. SWARTZ
No. E15610
Ex. 12/31/2021
ELECTRICAL
STATE OF CALIFORNIA
Date Signed: 3/25/2021

CONSULTANT
tk1sc COLLABORATIVE
11870 Pierce Street, Suite 160
Riverside, California 92505
951.299.4160 www.tk1sc.com
Project Leader - Jerry Leonhardt
Electrical Lead - Reid Cordry
tk1sc Job #:2019-0228A

DRAWING STATUS
CONSTRUCTION DOCUMENTS

ISSUE

No.	Date	Description
1	10/20/2020	INITIAL PLAN REVIEW
2	01/22/2021	AGENCY RESUBMITTAL
3	03/22/2021	AGENCY RESUBMITTAL

If drawing is not 30" x 42" it is a reduced print

PROJECT
RESIDENTIAL CENTER, UKIAH: REPLACEMENT OF EXISTING RESIDENTIAL CENTER
440 EAST HILL ROAD
WILLITS, CALIFORNIA 95490
MENDOCINO COUNTY
CALIFORNIA CONSERVATION CORP

Supervisor	Designed	Drawn
		Author

DSA Application No.
XX-XXXXXX

SHEET TITLE
WAREHOUSE BUILDING EMERGENCY LIGHTING PHOTOMETRIC PLAN

DGS Project Number	NMR Project Number
XXXXX	18-6456

Reference North: NORTH

Sheet Scale: 1/8" = 1'-0"

Sheet Number: E102W

ISSUE DATE
July 9, 2021

Plot Date: 3/22/2021 9:30:51 AM
File Name: BIM 360://CCC Willits Residential Center/E_CCC Willits_WAREHOUSE_2019-0228A.rvt

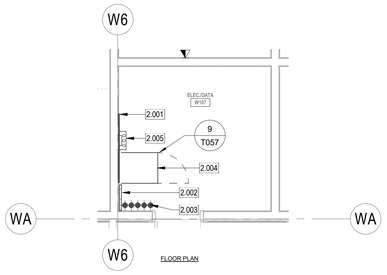

FLOOR PLAN

BLDG W - ENLARGED IDF PLANS W107

2

SCALE: 1/4" = 1'-0"

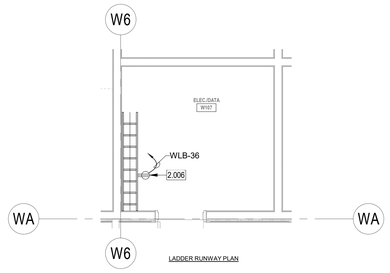

LADDER RUNWAY PLAN

BLDG W - ENLARGED IDF LADDER RUNWAY

3

SCALE: 1/4" = 1'-0"

KEYNOTES

2.001 PLYWOOD BACKBOARD AND TELECOMMUNICATIONS BUSBAR BY E.C. SCS CONTRACTOR SHALL INSTALL #6 WITH GREEN INSULATION TO EACH DATA EQUIPMENT RACK/CABINET, OVERHEAD LADDER TRAY/LADDER RACK, TELECOMMUNICATIONS CONDUITS, TELECOMMUNICATIONS CABLE TRAY(S), ANTI STATIC TILE GROUNDING POINTS ETC. AS REQUIRED. CONNECTIONS SHALL BE MADE WITH 2 HOLE COMPRESSION CONNECTORS. ALL CONNECTIONS SHALL BE BARE METAL TO BARE METAL USING APPROPRIATE ANTIOXIDANT COMPOUND.

2.002 WALL FIELD FOR CAMPUS COPPER BACKBONE CABLE

2.003 4" UNDERGROUND CONDUIT FOR CAMPUS BACKBONE CABLE

2.004 WALL MOUNT CABINET, (CPI PN#12419-736, CPI PN#40975-001, CPI PN#40973-001) ON EXISTING WALL BOARD. SCS CONTRACTOR TO VERIFY PROPER SPACE AND CLEARANCE BEFORE INSTALLATION.

2.005 ANSI-J-STD 607A COMPLIANT U.L.-LISTED TELECOMMUNICATIONS MAIN GROUND BUSBAR (TMGB) CHATSWORTH #40153-020 OR EQUAL BY HARGER. MOUNT 12"A.F.F. PROVIDE 1/8" BRASS ENGRAVED NAMEPLATE WITH ABBREVIATION "T.M.G.B." AND ATTACH TO BUS BAR. PROVIDE #6 GROUND CONDUCTOR WITH GREEN INSULATION TO EACH DATA EQUIPMENT RACK/CABINET, OVERHEAD LADDER TRAY/LADDER RACK, ETC. AS REQUIRED. CONNECTIONS SHALL BE MADE WITH 2 HOLE COMPRESSION CONNECTORS. CONNECTIONS SHALL BE BARE METAL TO BARE METAL USING APPROPRIATE ANTIOXIDANT COMPOUND. PROVIDE ALL OTHER GROUNDING REQUIREMENTS AS DETAILED IN THE PATHWAYS & GROUNDING RISER DIAGRAM SHEET T4.07. ELECTRICAL CONTRACTOR SHALL PROVIDE 1/2"C. WITH #6AWG WITH GREEN INSULATION FROM TMGB TO GROUND BUSBAR LOCATED INSIDE MPOE ROOM ELECTRICAL PANEL. ELECTRICAL CONTRACTOR SHALL PROVIDE TELECOMMUNICATIONS BONDING CONDUCTOR (TBC) CONSISTING OF (1) 1"C., W/ #1AWG (U.O.N.) WITH GREEN INSULATION CONNECTING MAIN BUILDING GROUND BUS BAR LOCATED IN MAIN ELECTRICAL ROOM TO THE TELECOMMUNICATIONS MAIN GROUNDING BUSBAR (TMGB) UTILIZING 2-HOLE COMPRESSION CONNECTORS. LABEL EACH END OF TBC WITH A GROUND WARNING TAG (PANDUIT #PT-BGRND OR EQUAL).

2.006 NEMA L6-30R 30A TWIST-LOCK MOUNTED TO LADDER RACK, PROVIDED BY E.C.

KEYNOTES

2.014 CONNECT COMPLETE TO WATER HEATER AS REQUIRED. PROVIDE CODE SIZED DISCONNECT SWITCH AT THE WATER HEATER AS REQUIRED. COORDINATE LOCATION WITH PLUMBING CONTRACTOR PRIOR TO ROUGH-IN.

2.015 CONNECT CIRCULATION PUMP, TIME CLOCK AND/OR AQUASTAT AS REQUIRED. PROVIDE CODE SIZED DISCONNECT SWITCH AS REQUIRED. SEE PLUMBING PLANS FOR MORE INFORMATION. COORDINATE LOCATION WITH PLUMBING CONTRACTOR PRIOR TO ROUGH-IN.

2.020 PROVIDE CONNECTION TO ROLL UP DOOR MOTOR. CONTRACTOR SHALL FURNISH AND INSTALL ALL CONTROLS FOR OPERATION AS REQUIRED BY MANUFACTURER INSTALLATION INSTRUCTIONS.

2.021 KEY OPERATED SWITCH FOR ROLL UP DOOR CONTROL. CONTRACTOR SHALL FURNISH AND INSTALL ALL CONTROLS AND WIRING FOR OPERATION AS REQUIRED BY MANUFACTURER INSTALLATION INSTRUCTIONS.

2.026 ACCESS CONTROL SYSTEM CARD READER WITH CONDUIT AND CABLING, PER SPECIFICATIONS. SEE SHEET T.056 FOR MORE INFORMATION.

2.027 CCTV LOCATION, EXTERIOR MOUNT IOP CAMERA. PROVIDE AND INSTALL FLUSH MOUNTED SINGLE GANG J-BOX WITH 1" WATERPROOF SLEEVE TO THE ACCESSIBLE CEILING SPACE FOR FUTURE EXTERIOR CCTV CAMERA. PROVIDE (1)CAT-6A CABLE TO EQUIPMENT PATCH PANEL IN NEAREST IDF/MDF ROOM. PROVIDE FIRE STOP PER CODE. MINIMUM 1/2" DEEP FIRE STOP PUTTY ON EACH SIDE FOR SOUND ISOLATION FOR FIRE RATED WALL PENETRATIONS. COORDINATE FINAL LOCATION WITH ARCH RCP. SEE SHEET T055 FOR MORE INFORMATION.

2.037 NEMA WIRELESS ACCESS POINT ENCLOSURE OBERON MODEL #1026-14126 OR EQUAL - FOR OWNER'S WAP ANTENNA AND ACCESS POINT EQUIPMENT. COORDINATE FINAL MOUNTING LOCATION AND HEIGHT OF NEMA BOXES WITH OWNER PRIOR TO ROUGH IN. PROVIDE CAT-6 CABLE FROM ACCESS POINT TO EQUIPMENT PATCH PANEL IN NEAREST IDF/MDF ROOM.

2.048 PROVIDE RETRACTABLE CORD REEL REELCRAFT #L4050-163-3, MOUNTED TO P1001 UNISTRUT. PROVIDE ALL NECESSARY HARDWARE AS REQUIRED.

2.049 PROVIDE DEDICATED RECEPTACLE FOR FORKLIFT BATTERY CHARGER PER MANUFACTURER'S REQUIREMENTS.

2.052 CONNECT AS REQUIRED TO WASHER/EXTRACTOR. SEE LS-111 FOR ADDITIONAL INFORMATION.

2.053 CONNECT AS REQUIRED TO ELECTRIC DRYER. SEE LS-111 FOR ADDITIONAL INFORMATION.

2.054 CONNECT AS REQUIRED TO LINT COLLECTOR PER MANUFACTURER'S REQUIREMENTS. SEE LS-111 FOR ADDITIONAL INFORMATION.

6.101 PROVIDE AND INSTALL (1) 1-1/4" CONDUIT SLEEVES FOR LOW VOLTAGE SYSTEMS CABLING. SLEEVES TO BE STUBBED OUT IN ACCESSIBLE CEILING SPACES MIN. 6" ABOVE T-BAR AS REQUIRED. PROVIDE FIRE STOP PER CODE. SEE DETAIL 10/E601.

6.105 PROVIDE AND INSTALL (3) 2" CONDUIT SLEEVES FOR LOW VOLTAGE SYSTEMS CABLING. SLEEVES TO BE STUBBED OUT IN ACCESSIBLE CEILING SPACES MIN 6" ABOVE T-BAR AS REQUIRED. SEE DETAIL 10/601.

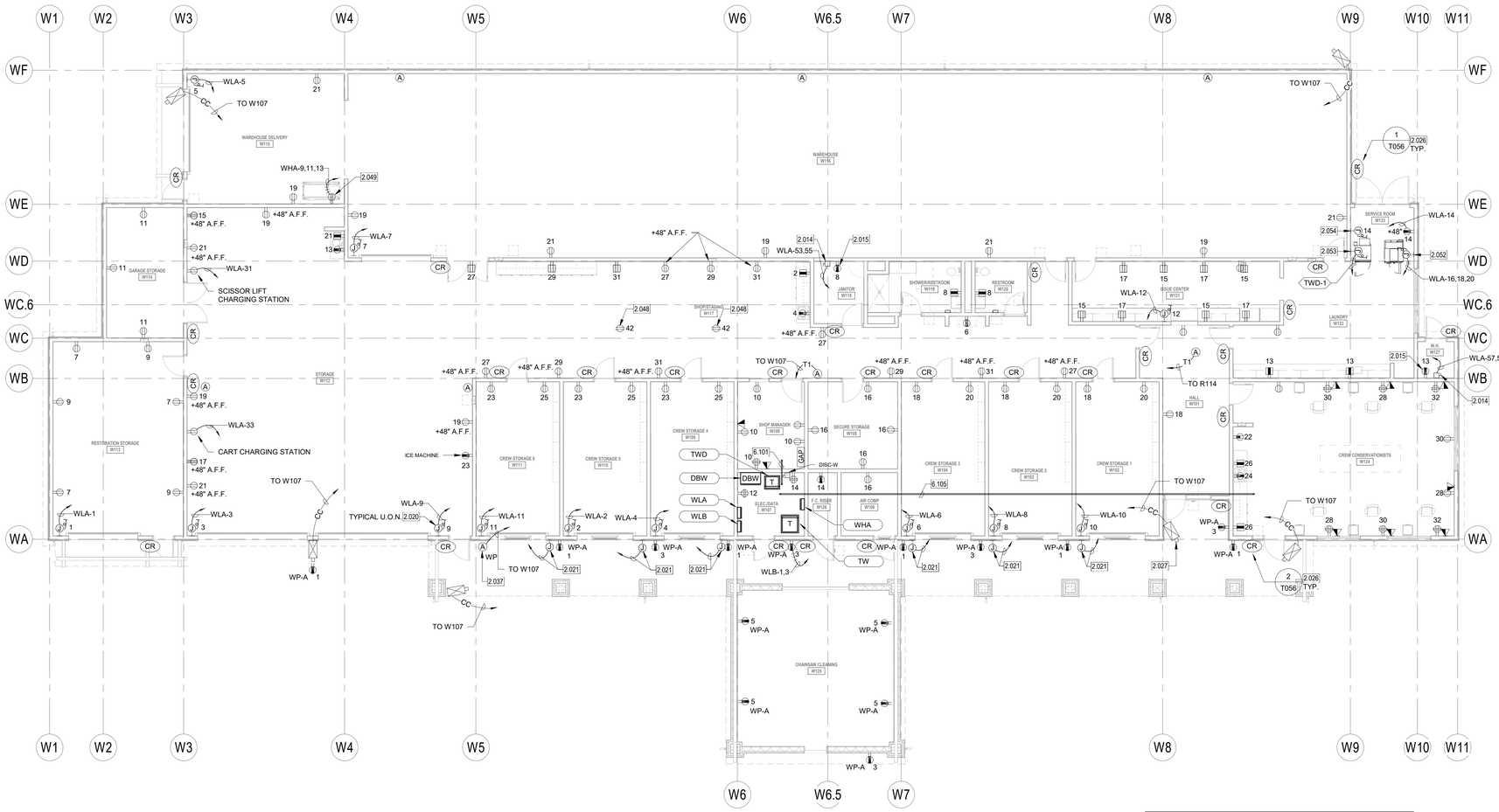

WAREHOUSE BUILDING POWER AND SIGNAL PLAN

SCALE: 1/8" = 1'-0"

POWER PLAN GENERAL NOTES:

1. ALL RECEPTACLES ON COMMON WALLS SHALL BE SEPARATE BOXES AND OFFSET 24-INCHES MINIMUM.
2. ALL PENETRATIONS THROUGH FIRE RATED WALLS SHALL BE PROTECTED FROM THE SPREAD OF FIRE WITH AN APPROVED FIRESTOP SYSTEM EQUAL OR GREATER THAN THE FIRE RATING OF THE WALL.
3. ALL WALL-MOUNTED DEVICE HEIGHTS SHALL BE VERIFIED WITH THE ARCHITECT PRIOR TO ROUGH-IN.
4. ALL FURNITURE FEED LOCATIONS TO BE VERIFIED WITH ARCHITECT AND FURNITURE VENDOR PRIOR TO ROUGH-IN.
5. ALL FURNITURE WHIPS SHALL BE TRIMMED TO REDUCE EXCESS WHIP LENGTH.
6. WHEN EXPOSED CEILINGS OR OPEN GRID CONDITIONS OCCUR, THE CONTRACTOR WILL NEED TO PROVIDE THE FOLLOWING ITEMS:

   - ALL BRANCH CIRCUITS SHALL BE IN EMT.

   - ALL BRANCH CIRCUITS SHALL BE ROUTED NEATLY AND IN PARALLEL TO STRUCTURES OR DUCT WORK.

   - VISUALLY OBJECTIONABLE BRANCH CIRCUITS SHALL BE REROUTED AT THE REQUEST OF THE ARCHITECT AT NO ADDITIONAL COST.
7. EXPOSED CABLE/CONDUCTORS INSTALLED IN A PLENUM SPACE SHALL CONFORM TO NEC, OR CEC WHERE ADOPTED, ARTICLE 300.22(C).
8. PROVIDE G.F.C.I. TYPE RECEPTACLE(S) OR RECEPTACLE(S) PROTECTED BY A GFCI CIRCUIT BREAKER(S) WHEN LOCATED WITHIN 6 FEET OF ANY SINK OR THERAPEUTIC TUB, LAUNDRY AREA, SERVING ANY DRINKING FOUNTAIN OR VENDING MACHINE, WITHIN ANY KITCHEN SPACE AND/OR LOCATED OUTDOORS. WHERE RECEPTACLES ARE NOT READILY ACCESSIBLE, PROVIDE GFCI CIRCUIT BREAKER(S) TO PROTECT THE RESPECTIVE BRANCH CIRCUIT AND PROVIDE ADDITIONAL NEUTRAL CONDUCTORS IN THE BRANCH CIRCUITING AS REQUIRED TO ENSURE PROPER GFCI FUNCTION
9. PROVIDE OCCUPANCY SENSOR/LIGHTING CONTROL SYSTEM CONTROLLED RECEPTACLE RELAY(S) AS REQUIRED TO SWITCH CONTROLLED RECEPTACLES. CONNECT BRANCH CIRCUITRY AND CONTROL WIRING AS REQUIRED TO ALLOW OCCUPANCY SENSOR/LIGHTING CONTROL SYSTEM RELAY TO SWITCH STANDALONE AND/OR SYSTEMS FURNITURE CONTROLLED RECEPTACLES AS INDICATED ON PLANS. PROVIDE ADDITIONAL CONDUIT, WIRING AND PATHWAYS NECESSARY TO CONNECT BRANCH CIRCUITRY AND CONTROL WIRING TO REMOTE RELAYS TO INCLUDE RELAY(S) LOCATED ON ALTERNATE FLOORS, IN ELECTRICAL ROOMS, ETC.
10. UNLESS SPECIFICALLY SHOWN AS (E), (R), (ER), (D), EXISTING OR NON-BOLD, ALL ELECTRICAL DEVICES SHOWN ARE NEW.
11. PROVIDE REDUNDANT GROUND PATH IN ALL BRANCH CIRCUITS SERVING PATIENT CARE AREAS CONSISTING OF A SEPARATE, INSULATED EQUIPMENT GROUNDING CONDUCTOR PER NEC, OR CEC WHERE ADOPTED, ART 517.13.
12. CONTRACTOR SHALL PROVIDE CONDUIT AND WIRE FOR ALL DEVICES TO PANELBOARD(S) INDICATED ON PLANS FOR A COMPLETE AND OPERABLE SYSTEM.
13. CONTRACTOR SHALL PROVIDE MINIMUM 2#12, 1#12G IN ¾" CONDUIT UNLESS OTHERWISE NOTED. REFERENCE WIRE SIZE TABLE CHART ABOVE. WHERE REQUIRED, CONDUIT AND WIRE SHALL BE UPSIZED TO MEET THE REQUIREMENT OF THE DEVICE BEING SERVED BY THE BRANCH CIRCUIT. WHERE CONDUIT AND WIRING IS INDICATED AT THE HOME RUN, WIRING AND CONDUIT SHALL CONTINUE AT THAT SIZE FOR THE ENTIRE LENGTH OF THE CIRCUIT.
14. CONTRACTOR SHALL FURNISH ADDITIONAL SWITCHLEGS OR HOT WIRES AS REQUIRED TO MEET THE CONTROL INTENT OF THE DOCUMENTS AND AS REQUIRED BY CODE (I.E. EMERGENCY LIGHTING AND SWITCHED RECEPTACLES).
15. MULTIPLE CIRCUITS MAY BE USED IN A SINGLE RACEWAY. NO MORE THAN (3) DEDICATED CIRCUITS OR (4) CURRENT CARRYING CONDUCTORS SHALL BE INSTALLED IN ANY RACEWAY UNLESS OTHERWISE NOTED. WHERE A COMMON GROUNDED CONDUCTOR IS USED FOR MULTIPLE INDIVIDUAL BRANCH CIRCUITS, PER SECTIONS CEC 200.4, 250.122, 310.15(B)(2), CONDUIT SIZE SHALL BE INCREASED AS REQUIRED FOR THE CONDUCTORS INCLUDING TEMPERATURE DERATING PER CEC TABLE C1.
16. FURNISH AND INSTALL JUNCTION BOXES AS REQUIRED TO MEET MAXIMUM BEND REQUIREMENTS FOR PULLING WIRES PER CEC 358.26. JUNCTION BOXES SHALL BE SIZED AS REQUIRED PER CEC 314.28 UNLESS OTHERWISE NOTED.

COMMUNICATIONS PATHWAYS GENERAL NOTES

1. CONDUITS SHALL, (a) CONTAIN NO CONTINUOUS SECTIONS LONGER THAN 30M (98 FT.), AND, (b) CONTAIN NO MORE THAN (2) 90° BENDS OR (1) REVERSE BEND WITHOUT INSTALLING A PULLBOX. SPLIT CONDUITS IN PLACE OF PULLBOXES ARE UNACCEPTABLE.
2. CONDUITS SHALL CONTAIN PLASTIC OR NYLON PULL TAPE RATED AT 200 LBS. WITH A MINIMUM OF 5 FEET OF EXTRA PULL TAPE COILED AT EACH END.
3. CONDUIT BEND RADIUS SHALL BE (a) A MINIMUM OF 6 TIMES THE INTERNAL CONDUIT DIAMETER FOR CONDUITS 2" IN DIAMETER OR LESS, AND, (b) 10 TIMES THE INTERNAL CONDUIT DIAMETER FOR CONDUITS MORE THAN 2" IN DIAMETER.
4. TERMINATE CONDUIT STUBS AND SLEEVES THAT PROTRUDE THROUGH STRUCTURAL FLOORS 2"-3" ABOVE THE FLOOR SURFACE.
5. INSTALL BUSHINGS OR BELL ENDS AS REQUIRED ON ALL CONDUITS.
6. FLEX CONDUIT IS UNACCEPTABLE FOR USE AS A COMMUNICATIONS CONDUIT EXCEPT AT SEISMIC JOINTS AND/OR IF APPROVED IN WRITING BY THE ENGINEER.
7. ALL UNDER SLAB OR IN-SLAB CONDUITS SHALL BE INSTALLED IN A MANNER THAT PREVENTS WATER INFILTRATION OF THE CONDUIT. IT IS THE CONTRACTOR'S RESPONSIBILITY TO ENSURE GROUND WATER, RAIN WATER OR CONSTRUCTION WATER IS PREVENTED FROM ENTERING AND/OR REMOVED FROM THE CONDUITS PRIOR TO PLACEMENT OF COMMUNICATIONS CABLES. SEE ELECTRICAL SPECIFICATIONS, DETAILS AND PLANS FOR ADDITIONAL CONDUIT SEALING REQUIREMENTS.
8. ALL PULLBOXES SHALL BE SIZED AND INSTALLED PER ANSI-TIA-569-C. PULLBOXES FOR IN/UNDER SLAB CONDUIT RUNS ARE NOT PERMITTED UNLESS OTHERWISE NOTED. PULLBOXES FOR OVERHEAD CONDUIT RUNS SHALL BE LOCATED ABOVE ACCESSIBLE CEILINGS WITHIN THE ACCESSIBLE CEILING SPACE AND SUPPORTED INDEPENDENTLY FROM THE STRUCTURE AND CONDUIT SUPPORTS. PULLBOXES FOR ROOF MOUNTED OR EXTERIOR ABOVE GRADE APPLICATIONS SHALL BE NEMA 3R RATED. PULLBOXES SHALL BE SIZED ACCORDING TO THE FOLLOWING:

CONDUIT SIZE	WIDTH	LENGTH	DEPTH	WIDTH INCREASE PER ADDITIONAL CONDUIT
1"	4"	16"	3"	2"
2"	8"	36"	4"	5"
3"	12"	48"	5"	6"
4"	15"	60"	8"	8"

   FOR OTHER CONDUIT SIZES REFER TO ANSI/TIA-569-C TABLE 12. - LATEST PUBLISHED EDITION.
9. CONDUIT(S) SHALL EXIT A PULLBOX ON THE WALL OPPOSITE THE WALL ENTERED.
10. PROVIDE LABELING OF EACH CONDUIT PER GENERAL ELECTRICAL SPECIFICATIONS.
11. PROVIDE INTERNAL/EXTERNAL GAS AND WATER TIGHT MECHANICAL SEALING/PLUGGING OF EACH BUILDING ENTRY CONDUIT AS SPECIFIED ELSEWHERE IN THE DRAWINGS AND SPECIFICATIONS.

VOLTAGE DROP WORKSHEET: REFERENCE ONLY

1. ALL BRANCH CIRCUITS ARE DESIGNED TO LIMIT VOLTAGE DROP 3% OR LESS USING THE FOLLOWING CRITERIA:

208 VOLT, 1 PHASE LOAD:

LOAD (VA)	DISTANCE	CU CONDUCTOR SIZE
0-1000 VA (500 PER PHASE) 0-4.8 AMPS	0-225 FT	#12
	226-360 FT	#10
	361-572 FT	#8
1001-2000 VA (1,000 PER PHASE) 4.8-9.6 AMPS	0-151 FT	#12
	152-240 FT	#10
	241-380 FT	#8
	381-604 FT	#6
2001-3,328 VA (1,664 PER PHASE) 9.6-16 AMPS	0-78 FT	#12
	79-125 FT	#10
	126-198 FT	#8
3329-4,992 VA (2,496 PER PHASE) 16-24 AMPS	0-52 FT	#12
	53-83 FT	#10
	84-132 FT	#8

120 VOLT, 1 PHASE LOAD:

LOAD (VA)	DISTANCE	CU CONDUCTOR SIZE
0-1000 VA 0-8 AMPS	0-130 FT	#12
	131-205 FT	#10
	205-330 FT	#8
1001-1500 VA 8-12.5 AMPS	0-87 FT	#12
	88-138 FT	#10
	139-219 FT	#8
	220-350 FT	#6
1501-1920 VA 12.5-16 AMPS	0-68 FT	#12
	69-108 FT	#10
	109-172 FT	#8
	173-273 FT	#6
1921-2880 VA 16-24 AMPS	0-72 FT	#10
	73-114 FT	#8
	115-182 FT	#6

ANY 3 PHASE LOADS GREATER THAN 30 AMPS ARE SHOWN ON THE FEEDER SCHEDULE OR MOTORIZED EQUIPMENT SCHEDULE WITH ASSOCIATED VOLTAGE DROP LIMITED TO 2% OR LESS.

WALL TYPES LEGEND

SEE SHEET G121 FOR ASSEMBLY TYPES

EXTERIOR

	2 x 6 WOOD STUD WALL - NON RATED	0-W1-6 * ◆ #
	2 x 12 WOOD STUD WALL - NON RATED	0-W1-12 * ◆ #

INTERIOR

	2 x 4 WOOD STUD WALL - NON RATED	0-W2-4 * ◆ #
	2 x 6 WOOD STUD WALL - NON RATED	0-W2-6 * ◆ #
	2 x 8 WOOD STUD WALL - NON RATED	0-W2-8 * ◆ #
	2 x 12 WOOD STUD WALL - NON RATED	0-W2-12 * ◆ #
	2 x 4 WOOD STUD WALL - ACOUSTIC	0-W5-4 * ◆ #
	2 x 6 WOOD STUD WALL - ACOUSTIC	0-W5-6 * ◆ #
	2 X 4 WOOD STUD WALL - 1-HR FIRE PARTITION W/ PROTECTED OPENINGS	1-W3-4 * ◆ #
	2 X 6 WOOD STUD WALL - 1-HR FIRE PARTITION W/ PROTECTED OPENINGS	1-W3-6 * ◆ #

WALL TYPE NOTES

PARTITION SYMBOL

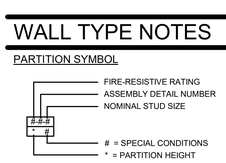

IDENTIFICATION STAMP
DIV. OF THE STATE ARCHITECT
APP: 02-118630 INC:
REVIEWED FOR
SS ☐ FLS ☐ ACS ☑
DATE: 04/13/2021

OFFICE OF THE STATE FIRE MARSHAL
APPROVED FIRE AND PANIC ONLY
Approval of this plan does not authorize or approve any omission or deviation from applicable regulations. Final approval is subject to field inspection. One set of approved plans shall be available on the project site at all times.
PERMIT NO. 28-N-2332-CP
REVIEWED BY: LEO CATAYLO, OSFM
DATE: 4/1/2021

GENERAL SERVICES
Department of General Services
State of California
Real Estate Services Division
Project Management & Development Branch
707 Third Street, Suite 4-105
West Sacramento, California 95605

NICHOLS MELBURG & ROSSETTO
ARCHITECTS + ENGINEERS
300 Knollcrest Drive
Redding, CA. 96002
(530) 222-3300 (530) 222-3538 FAX
http://www.nmrdesign.com

Copyright © 2019
All ideas, designs, arrangements and plans indicated or represented by this drawing are owned by, and the property of, NICHOLS, MELBURG and ROSSETTO and were created, evolved and developed for use on, and in connection with, the specified project. None of such ideas, designs, arrangements or plans shall be used by, or disclosed to any person, firm or corporation for any purpose whatsoever without the written permission of NICHOLS, MELBURG and ROSSETTO.

LICENSE STAMPS

REGISTERED PROFESSIONAL ENGINEER
RICHARD W. SWETT
No. E15610
12/31/2021
ELECTRICAL
STATE OF CALIFORNIA
Date Signed: 3/25/2021

CONSULTANT
tklsc COLLABORATIVE
11870 Pierce Street, Suite 160
Riverside, California 92505
951.299.4160 www.tk1sc.com
Project Leader - Jerry Leonhardt
Electrical Lead - Reid Cordry
tk1sc Job #:2019-0228A

DRAWING STATUS
CONSTRUCTION DOCUMENTS

ISSUE

No.	Date	Description
1	10/20/2020	INITIAL PLAN REVIEW
2	01/22/2021	AGENCY RESUBMITTAL
3	03/22/2021	AGENCY RESUBMITTAL

If drawing is not 30" x 42" it is a reduced print

PROJECT
RESIDENTIAL CENTER, UKIAH: REPLACEMENT OF EXISTING RESIDENTIAL CENTER
440 EAST HILL ROAD
WILLITS, CALIFORNIA 95490
MENDOCINO COUNTY
CALIFORNIA CONSERVATION CORP

Supervisor	Designed	Drawn
		Author

DSA Application No.
XX-XXXXXX

SHEET TITLE
WAREHOUSE BUILDING POWER AND SIGNAL PLAN

DGS Project Number	NMR Project Number
XXXXX	18-6456

Reference North
Sheet Scale: As indicated
Sheet Number: E201W

ISSUE DATE
July 9, 2021

Plot Date: 3/22/2021 9:31:02 AM
File Name: BIM 360://CCC Willits Residential Center/E_CCC Willits_WAREHOUSE_2019-0228A.rvt

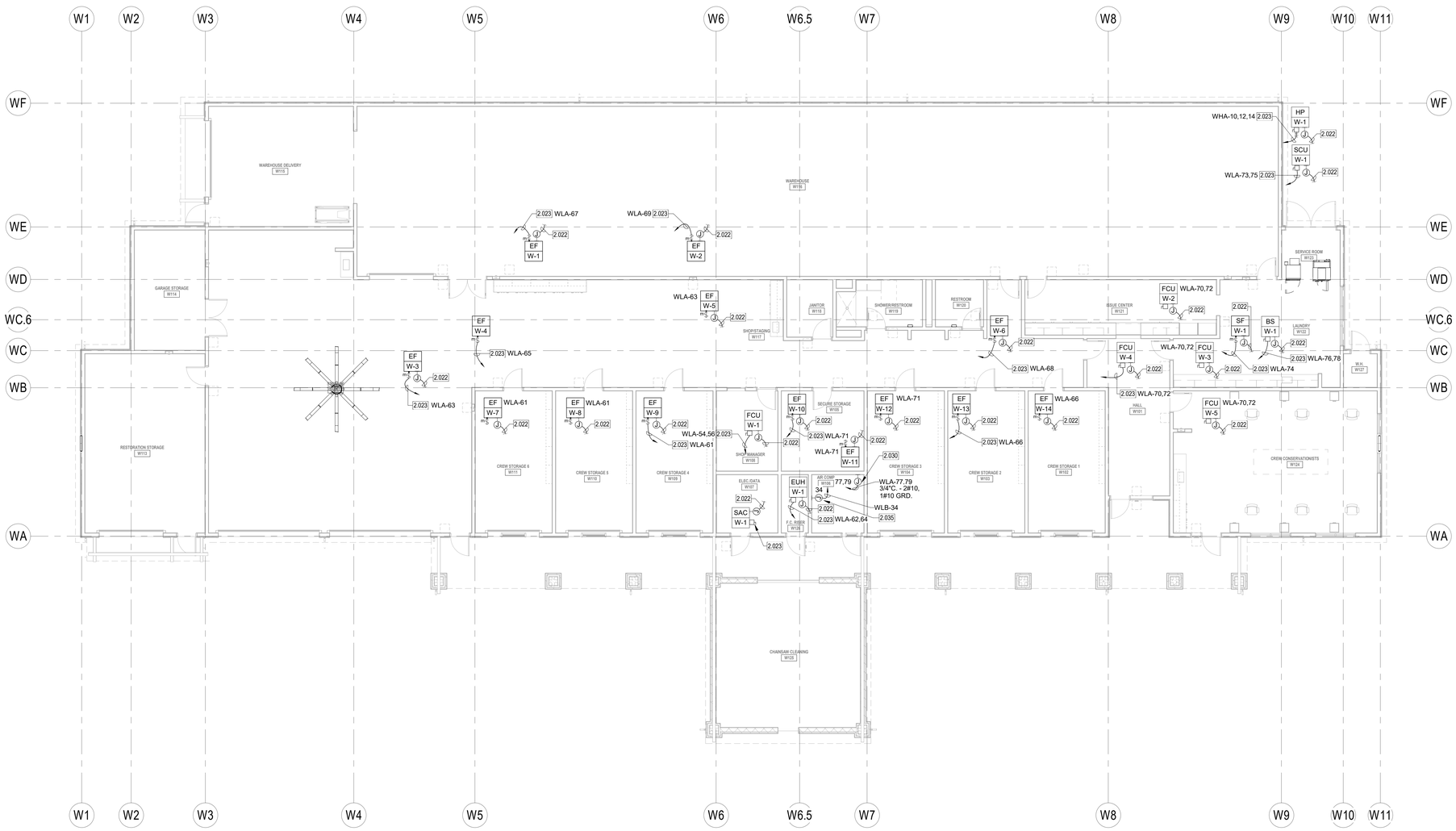

KEYNOTES

2.022 PROVIDE 3/4"C.O.(S) TO RESPECTIVE CONTROL DEVICE(S) FOR CONTROL WIRING. REFER TO THE EQUIPMENT CONTROL WIRING DIAGRAMS FOR ADDITIONAL INFORMATION.

2.023 REFER TO MOTORIZED EQUIPMENT SCHEDULE FOR MOTOR FEEDER/ BRANCH CIRCUIT INFORMATION.

2.030 CONNECT COMPLETE TO AIR COMPRESSOR AS REQUIRED. PROVIDE CODE SIZED DISCONNECT SWITCH AT THE COMPRESSOR AS REQUIRED. COORDINATE LOCATION WITH PLUMBING CONTRACTOR PRIOR TO ROUGH-IN.

2.035 CONNECT COMPLETE TO AIR DRYER AS REQUIRED. PROVIDE CODE SIZED DISCONNECT SWITCH AT THE DRYER AS REQUIRED. COORDINATE LOCATION WITH PLUMBING CONTRACTOR PRIOR TO ROUGH-IN.

WALL TYPES LEGEND

SEE SHEET G121 FOR ASSEMBLY TYPES

EXTERIOR

2 x 6 WOOD STUD WALL - NON RATED	0-W1-6	* ● #
2 x 12 WOOD STUD WALL - NON RATED	0-W1-12	* ● #

INTERIOR

2 x 4 WOOD STUD WALL - NON RATED	0-W2-4	* ● #
2 x 6 WOOD STUD WALL - NON RATED	0-W2-6	* ● #
2 x 8 WOOD STUD WALL - NON RATED	0-W2-8	* ● #
2 x 12 WOOD STUD WALL - NON RATED	0-W2-12	* ● #
2 x 4 WOOD STUD WALL - ACOUSTIC	0-W5-4	* ● #
2 x 6 WOOD STUD WALL - ACOUSTIC	0-W5-6	* ● #
2 X 4 WOOD STUD WALL - 1-HR FIRE PARTITION W/ PROTECTED OPENINGS	1-W3-4	* ● #
2 X 6 WOOD STUD WALL - 1-HR FIRE PARTITION W/ PROTECTED OPENINGS	1-W3-6	* ● #

WALL TYPE NOTES

PARTITION SYMBOL

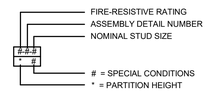

MOTORIZED EQUIPMENT SCHEDULE

TAG	ITEM	DESCRIPTION	EQUIPMENT RATING VOLTS	PH.	MOTOR HP	MOTOR FLA	VFD FLA	MCA	MOCP	DISC. SW. SIZE STARTER SIZE	CIRCUIT DATA CONDUIT - WIRE	SPECIFIC NOTES
BS	W-1	BRANCH SELECTOR	208	1		0.5		0.6	15 A	30AS	3/4"C. - 2#12, 1#12 GRD.	A
EF	W-1	EXHAUST FAN	115	1	.167	4.4		5.5	15 A	Motor Rated	3/4"C. - 2#12, 1#12 GRD.	A,C
EF	W-2	EXHAUST FAN	115	1	.75	13.8		17.3	20 A	Motor Rated	3/4"C. - 2#12, 1#12 GRD.	A,C
EF	W-3	EXHAUST FAN	115	1	.25	5.8		7.3	15 A	Motor Rated	3/4"C. - 2#12, 1#12 GRD.	A,C
EF	W-4	EXHAUST FAN	115	1	.5	9.8		12.3	15 A	Motor Rated	3/4"C. - 2#12, 1#12 GRD.	A,C
EF	W-5	EXHAUST FAN	115	1	.25	5.8		7.3	15 A	Motor Rated	3/4"C. - 2#12, 1#12 GRD.	A,C
EF	W-6	EXHAUST FAN	115	1	.167	4.4		5.5	15 A	Motor Rated	3/4"C. - 2#12, 1#12 GRD.	A,C
EF	W-7	EXHAUST FAN	115	1	.167	4.4		5.5	15 A	Motor Rated	3/4"C. - 2#12, 1#12 GRD.	A,C
EF	W-8	EXHAUST FAN	115	1	.167	4.4		5.5	15 A	Motor Rated	3/4"C. - 2#12, 1#12 GRD.	A,C
EF	W-9	EXHAUST FAN	115	1	.167	4.4		5.5	15 A	Motor Rated	3/4"C. - 2#12, 1#12 GRD.	A,C
EF	W-10	EXHAUST FAN	115	1	.167	4.4		5.5	15 A	Motor Rated	3/4"C. - 2#12, 1#12 GRD.	A,C
EF	W-11	EXHAUST FAN	115	1	.167	4.4		5.5	15 A	Motor Rated	3/4"C. - 2#12, 1#12 GRD.	A,C
EF	W-12	EXHAUST FAN	115	1	.167	4.4		5.5	15 A	Motor Rated	3/4"C. - 2#12, 1#12 GRD.	A,C
EF	W-13	EXHAUST FAN	115	1	.167	4.4		5.5	15 A	Motor Rated	3/4"C. - 2#12, 1#12 GRD.	A,C
EF	W-14	EXHAUST FAN	115	1	.167	4.4		5.5	15 A	Motor Rated	3/4"C. - 2#12, 1#12 GRD.	A,C
EUH	W-1	HEATER UNIT	208	1		12.7		15.9	20 A	30AS	3/4"C. - 2#12, 1#12 GRD.	A
FCU	W-1	FAN COIL UNIT	208	1		0.2		0.3	15 A	30AS	3/4"C. - 2#12, 1#12 GRD.	A
FCU	W-2	FAN COIL UNIT	208	1		1.3		1.6	15 A	30AS	3/4"C. - 2#12, 1#12 GRD.	A
FCU	W-3	FAN COIL UNIT	208	1		1.1		1.4	15 A	30AS	3/4"C. - 2#12, 1#12 GRD.	A
FCU	W-4	FAN COIL UNIT	208	1		0.5		0.6	15 A	30AS	3/4"C. - 2#12, 1#12 GRD.	A
FCU	W-5	FAN COIL UNIT	208	1		1.4		1.8	15 A	30AS	3/4"C. - 2#12, 1#12 GRD.	A
HP	W-1	HEAT PUMP	460	3		15.1		18.9	25 A	30AS	3/4"C. - 3#10, 1#10 GRD.	A
SAC	W-1	SPLIT SYSTEM INDOOR UNIT	208	1		14.6		18.3	20 A	30AS	3/4"C. - 2#12, 1#12 GRD.	A,J
SCU	W-1	SPLIT SYSTEM OUTDOOR UNIT	208	1		14.6		18.3	20 A	30AS	3/4"C. - 2#12, 1#12 GRD.	A
SF	W-1	EXHAUST FAN	115	1	.25	5.8		7.3	15 A	Motor Rated	3/4"C. - 2#12, 1#12 GRD.	A,C

POWER PLAN GENERAL NOTES:

1. ALL RECEPTACLES ON COMMON WALLS SHALL BE SEPARATE BOXES AND OFFSET 24-INCHES MINIMUM.
2. ALL PENETRATIONS THROUGH FIRE RATED WALLS SHALL BE PROTECTED FROM THE SPREAD OF FIRE WITH AN APPROVED FIRESTOP SYSTEM EQUAL OR GREATER THAN THE FIRE RATING OF THE WALL.
3. ALL WALL-MOUNTED DEVICE HEIGHTS SHALL BE VERIFIED WITH THE ARCHITECT PRIOR TO ROUGH-IN.
4. ALL FURNITURE FEED LOCATIONS TO BE VERIFIED WITH ARCHITECT AND FURNITURE VENDOR PRIOR TO ROUGH-IN.
5. ALL FURNITURE WHIPS SHALL BE TRIMMED TO REDUCE EXCESS WHIP LENGTH.
6. WHEN EXPOSED CEILINGS OR OPEN GRID CONDITIONS OCCUR, THE CONTRACTOR WILL NEED TO PROVIDE THE FOLLOWING ITEMS:
   - ALL BRANCH CIRCUITS SHALL BE IN EMT.
   - ALL BRANCH CIRCUITS SHALL BE ROUTED NEATLY AND IN PARALLEL TO STRUCTURES OR DUCT WORK.
   - VISUALLY OBJECTIONABLE BRANCH CIRCUITS SHALL BE REROUTED AT THE REQUEST OF THE ARCHITECT AT NO ADDITIONAL COST.
7. EXPOSED CABLE/CONDUCTORS INSTALLED IN A PLENUM SPACE SHALL CONFORM TO NEC, OR CEC WHERE ADOPTED, ARTICLE 300.22(C).
8. PROVIDE G.F.C.I. TYPE RECEPTACLE(S) OR RECEPTACLE(S) PROTECTED BY A GFCI CIRCUIT BREAKER(S) WHEN LOCATED WITHIN 6 FEET OF ANY SINK OR THERAPEUTIC TUB, LAUNDRY AREA, SERVING ANY DRINKING FOUNTAIN OR VENDING MACHINE, WITHIN ANY KITCHEN SPACE AND/OR LOCATED OUTDOORS. WHERE RECEPTACLES ARE NOT READILY ACCESSIBLE, PROVIDE GFCI CIRCUIT BREAKER(S) TO PROTECT THE RESPECTIVE BRANCH CIRCUIT AND PROVIDE ADDITIONAL NEUTRAL CONDUCTORS IN THE BRANCH CIRCUITING AS REQUIRED TO ENSURE PROPER GFCI FUNCTION
9. PROVIDE OCCUPANCY SENSOR/LIGHTING CONTROL SYSTEM CONTROLLED RECEPTACLE RELAY(S) AS REQUIRED TO SWITCH CONTROLLED RECEPTACLES. CONNECT BRANCH CIRCUITRY AND CONTROL WIRING AS REQUIRED TO ALLOW OCCUPANCY SENSOR/LIGHTING CONTROL SYSTEM RELAY TO SWITCH STANDALONE AND/OR SYSTEMS FURNITURE CONTROLLED RECEPTACLES AS INDICATED ON PLANS. PROVIDE ADDITIONAL CONDUIT, WIRING AND PATHWAYS NECESSARY TO CONNECT BRANCH CIRCUITRY AND CONTROL WIRING TO REMOTE RELAYS TO INCLUDE RELAY(S) LOCATED ON ALTERNATE FLOORS, IN ELECTRICAL ROOMS, ETC.
10. UNLESS SPECIFICALLY SHOWN AS (E), (R), (ER), (D), EXISTING OR NON-BOLD, ALL ELECTRICAL DEVICES SHOWN ARE NEW.
11. PROVIDE REDUNDANT GROUND PATH IN ALL BRANCH CIRCUITS SERVING PATIENT CARE AREAS CONSISTING OF A SEPARATE, INSULATED EQUIPMENT GROUNDING CONDUCTOR PER NEC, OR CEC WHERE ADOPTED, ART 517.13.
12. CONTRACTOR SHALL PROVIDE CONDUIT AND WIRE FOR ALL DEVICES TO PANELBOARD(S) INDICATED ON PLANS FOR A COMPLETE AND OPERABLE SYSTEM.
13. CONTRACTOR SHALL PROVIDE MINIMUM 2#12, 1#12G IN ½" CONDUIT UNLESS OTHERWISE NOTED. REFERENCE WIRE SIZE TABLE CHART ABOVE. WHERE REQUIRED, CONDUIT AND WIRE SHALL BE UPSIZED TO MEET THE REQUIREMENT OF THE DEVICE BEING SERVED BY THE BRANCH CIRCUIT. WHERE CONDUIT AND WIRING IS INDICATED AT THE HOME RUN, WIRING AND CONDUIT SHALL CONTINUE AT THAT SIZE FOR THE ENTIRE LENGTH OF THE CIRCUIT.
14. CONTRACTOR SHALL FURNISH ADDITIONAL SWITCHLEGS OR HOT WIRES AS REQUIRED TO MEET THE CONTROL INTENT OF THE DOCUMENTS AND AS REQUIRED BY CODE (I.E. EMERGENCY LIGHTING AND SWITCHED RECEPTACLES).
15. MULTIPLE CIRCUITS MAY BE USED IN A SINGLE RACEWAY. NO MORE THAN (3) DEDICATED CIRCUITS OR (4) CURRENT CARRYING CONDUCTORS SHALL BE INSTALLED IN ANY RACEWAY UNLESS OTHERWISE NOTED. WHERE A COMMON GROUNDED CONDUCTOR IS USED FOR MULTIPLE INDIVIDUAL BRANCH CIRCUITS, PER SECTIONS CEC 200.4, 250.122, 310.15(B)(2), CONDUIT SIZE SHALL BE INCREASED AS REQUIRED FOR THE CONDUCTORS INCLUDING TEMPERATURE DERATING PER CEC TABLE C1.
16. FURNISH AND INSTALL JUNCTION BOXES AS REQUIRED TO MEET MAXIMUM BEND REQUIREMENTS FOR PULLING WIRES PER CEC 358.26. JUNCTION BOXES SHALL BE SIZED AS REQUIRED PER CEC 314.28 UNLESS OTHERWISE NOTED.

WAREHOUSE BUILDING MECHANICAL POWER PLAN

SCALE: 1/8" = 1'-0"

MOTORIZED EQUIPMENT SCHEDULE GENERAL NOTES:

1. ALL BRANCH CIRCUIT DATA IS BASED UPON METALLIC CONDUITS. IF THE CONTRACTOR ELECTS TO USE NONMETALLIC CONDUITS, AN EQUIPMENT GROUNDING CONDUCTOR SHALL BE INSTALLED PER NEC, OR CEC WHERE ADOPTED, TABLE 250.122 AND THE CONDUIT SIZE SHALL BE INCREASED ACCORDINGLY.
2. ELECTRICAL CONTRACTOR SHALL REFER TO ALL DOCUMENTS RELATED TO THE EQUIPMENT (I.E. SHOP DRAWINGS, CONSTRUCTION DOCUMENTS, ETC.) IN REGARDS TO ELECTRICAL CHARACTERISTICS OF ALL EQUIPMENT LISTED IN THE SCHEDULE. ANY MODIFICATION AND/OR ADDITIONAL WORK NECESSARY SHALL BE INCLUDED IN THE BASE BID.
3. ELECTRICAL CONTRACTOR SHALL CHECK THE ROTATION OF ALL THREE PHASE MOTORS AND CORRECT THE ROTATION IF REVERSED.
4. ELECTRICAL CONTRACTOR SHALL PROVIDE FUSES SIZED PER THE EQUIPMENT NAMEPLATE INFORMATION.
5. DISCONNECT SWITCHES SHALL BE HEAVY DUTY TYPE, EXTERNALLY OPERATED, QUICK MAKE QUICK BREAK AND SHALL BE FUSIBLE OR NON FUSIBLE AS INDICATED. A MAXIMUM VOLTAGE, CURRENT AND HORSEPOWER SHALL BE CLEARLY MARKED ON SWITCH ENCLOSURE. SWITCHES HAVING DUAL RATINGS (HIGHER RATINGS WHEN USED WITH DUAL ELEMENT FUSES) SHALL HAVE RATINGS INDICATED ON METAL PLATES RIVETED OR OTHERWISE PERMANENTLY ATTACHED TO THE ENCLOSURE. WHEN INDICATED, TOGGLE SWITCHES SHALL BE MOTOR RATED FOR THE APPLICATION.
6. STARTERS SHALL BE FULL VOLTAGE, REDUCED VOLTAGE OR COMBINATION DISCONNECT AND STARTER, WITH CONTROL VOLTAGE AS REQUIRED, AS INDICATED ON THE DOCUMENTS RELATED TO THE EQUIPMENT, SUCH AS SHOP DRAWINGS, CONSTRUCTION DOCUMENTS, ETC. STARTERS SHALL INCLUDE MOTOR OVERLOAD PROTECTION, PHASE LOSS AND PHASE UNBALANCE PROTECTION AS REQUIRED.
7. ALL TERMINATIONS AND ENCLOSURES SHALL BE RATED FOR USE WITH 75 DEGREE C CONDUCTORS.
8. COMPLETE INSTALLATION SHALL CONFORM TO THE REQUIREMENTS OF NEC (OR CEC WHERE ADOPTED) ARTICLES 430 AND 440.
9. CONTRACTOR TO COORDINATE WITH ALL OTHER PROJECT TRADES AND WITH OWNER/ TENANT FOR TO OBTAIN RESPECTIVE EQUIPMENT SCCR AND PROVIDE APPROPRIATE PROTECTIVE DEVICES TO LIMIT AVAILABLE FAULT CURRENT TO LESS THAN THE EQUIPMENT NAMEPLATE SCCR PER NEC (OR CEC WHERE ADOPTED) 110.10. SEE POWER SYSTEM STUDY SPECIFICATIONS FOR ADDITIONAL REQUIREMENTS.
10. UNLESS OTHERWISE NOTED, MOCP VALUES FOR VFD-EQUIPPED DEVICE ARE SIZED PER NEC (OR CEC WHERE ADOPTED) 430.130(A).1. CONTRACTOR SHALL COORDINATE WITH ALL OTHER PROJECT TRADES AND WITH OWNER/ TENANT (IF PROVIDING EQUIPMENT ON PROJECT) TO OBTAIN NAMEPLATE VFD-EQUIPPED DEVICE MOCP VALUE FROM MANUFACTURER INSTALLATION INSTRUCTIONS AND PROVIDE APPROPRIATE PROTECTIVE DEVICES TO COMPLY WITH NEC (OR CEC WHERE ADOPTED) 430.130(A).2.

MOTORIZED EQUIPMENT SCHEDULE SPECIFIC NOTES:

A. FUSED AS RECOMMENDED BY MANUFACTURER.
B. MAGNETIC MOTOR STARTER WITH CONTROL TRANSFORMER, AUXILIARY CONTACTS, INDICATOR LIGHT AND H.O.A. SWITCH. VERIFY CONTROL TRANSFORMER VOLTAGE WITH M.C. PRIOR TO ORDERING MATERIAL.
C. ROUTE THROUGH LINE VOLTAGE CONTROL. SEE MECHANICAL AND/OR PLUMBING PLANS FOR ADDITIONAL REQUIREMENTS.
D. VERIFY LOCATION WITH PLUMBING PLANS PRIOR TO ROUGH-IN. CONNECT TO AQUASTAT AND TIME CLOCK AS REQUIRED.
E. REMOTE VFD. PROVIDE EARLY BREAK CONTACTS ON ANY DISCONNECT SWITCHES REQUIRED BY CODE OR SHOWN ON PLANS THAT ARE DOWNSTREAM OF THE REMOTE VFD. PROVIDE CONDUIT AND CONDUCTORS AS REQUIRED TO INTERCONNECT THE CONTACT WITH VFD "ENABLE" TERMINALS. REFER TO MECHANICAL AND/OR PLUMBING PLANS FOR LOCATION. PROVIDE FEEDER(S) TO CONNECT REMOTE VFD AND MOTOR(S) AS REQUIRED.
F. INTEGRAL VFD PROVIDED WITH EQUIPMENT. REFER TO MECHANICAL AND/OR PLUMBING PLANS FOR LOCATION. CONNECT TO VFD AS REQUIRED.
G. INTEGRAL DISCONNECT PROVIDED WITH EQUIPMENT. REFER TO MECHANICAL AND/OR PLUMBING PLANS FOR LOCATION. CONNECT TO INTEGRAL DISCONNECT AS REQUIRED.
H. INTEGRAL DISCONNECT PROVIDED WITH VFD. REFER TO MECHANICAL AND/OR PLUMBING PLANS FOR LOCATION. CONNECT TO INTEGRAL DISCONNECT AS REQUIRED.
J. INDOOR UNIT POWERED FROM RESPECTIVE OUTDOOR UNIT. PROVIDE POWER AND CONTROL WIRING AS REQUIRED.
K. ROUTE THROUGH LINE VOLTAGE CONTROL FOR KITCHEN HOOD FIRE SUPPRESSION SYSTEM. SEE MECHANICAL, FIRE ALARM AND FOOD SERVICE PLANS FOR ADDITIONAL REQUIREMENTS.

IDENTIFICATION STAMP
DIV. OF THE STATE ARCHITECT
APP: 02-118630 INC:
REVIEWED FOR
SS ☐ FLS ☐ ACS ☑
DATE: 04/13/2021

OFFICE OF THE STATE FIRE MARSHAL
APPROVED FIRE AND PANIC ONLY
Approval of this plan does not authorize or approve any omission or deviation from applicable regulations. Final approval is subject to field inspection. One set of approved plans shall be available on the project site at all times.
PERMIT NO: 28 N 2332 CP
REVIEWED BY: LEO CATALLO, OSFM
DATE: 4/ /2021

DGS GENERAL SERVICES
Department of General Services
State of California
Real Estate Services Division
Project Management & Development Branch
707 Third Street, Suite 4-105
West Sacramento, California 95605

NICHOLS MELBURG & ROSSETTO ARCHITECTS + ENGINEERS
300 Knollcrest Drive
Redding, CA. 96002
(530) 222-3300 (530) 222-3538 FAX
http://www.nmrdesign.com

Copyright © 2019
All ideas, designs, arrangements and plans indicated or represented by this drawing are owned by, and the property of, NICHOLS, MELBURG and ROSSETTO and were created, evolved and developed for use on, and in connection with, the specified project. None of such ideas, designs, arrangements or plans shall be used by, or disclosed to any person, firm or corporation for any purpose whatsoever without the written permission of NICHOLS, MELBURG and ROSSETTO.

LICENSE STAMPS

REGISTERED PROFESSIONAL ENGINEER RAYMOND W. SWEET No. E15610 12/31/2021 MECHANICAL STATE OF CALIFORNIA Date Signed 3/25/2021

CONSULTANT
tklsc COLLABORATIVE
11870 Pierce Street, Suite 160
Riverside, California 92505
951.299.4160 www.tklsc.com
Project Leader - Jerry Leonhardt
Electrical Lead - Reid Cordry
tk1sc Job #:2019-0228A

DRAWING STATUS
CONSTRUCTION DOCUMENTS

ISSUE

No.	Date	Description
1	10/20/2020	INITIAL PLAN REVIEW
2	01/22/2021	AGENCY RESUBMITTAL
3	03/22/2021	AGENCY RESUBMITTAL

If drawing is not 30" x 42" it is a reduced print

PROJECT
RESIDENTIAL CENTER, UKIAH: REPLACEMENT OF EXISTING RESIDENTIAL CENTER
440 EAST HILL ROAD
WILLITS, CALIFORNIA 95490
MENDOCINO COUNTY
CALIFORNIA CONSERVATION CORP

Supervisor	Designed	Drawn
		Author

DSA Application No.
XX-XXXXXX

SHEET TITLE
WAREHOUSE BUILDING MECHANICAL POWER PLAN

DGS Project Number	NMR Project Number
XXXXX	18-6456

Reference North: NORTH
Sheet Scale: As indicated
Sheet Number: E301W

ISSUE DATE
July 9, 2021

Plot Date: 3/22/2021 4:17:50 PM
File Name: BIM 360://CCC Willits Residential Center/E_CCC Willits_WAREHOUSE_2019-0228A.rvt

PANEL: WLA

MOUNTING: Surface | **DOUBLE-LUGS:** No | **VOLTS:** 120/208 Wye | **SUPPLY FROM:** TW
NEMA 3R: No | **200% NEUTRAL:** No | **PHASE:** 3 | **LOCATION:** ELEC./DATA W107
FEED THRU: No | **I/G BUS:** No | **WIRE:** 4 | **MCB:** 350A-3P
M.L.O.: No | **AIC:** 10,000 | **BUS:** 400A

NOTE	DESCRIPTION	BKR	POLE	TYPE	CIRC	A	B	C	CIRC	TYPE	POLE	BKR	DESCRIPTION	NOTE
	MOTORIZED DOOR RESTORATION STORAGE...	20 A	1	P	1	500			2	P	1	20 A	MOTORIZED DOOR CREW STORAGE 5 W110	
	MOTORIZED DOOR STORAGE W112	20 A	1	P	3		500		4	P	1	20 A	MOTORIZED DOOR CREW STORAGE 4 W109	
	MOTORIZED DOOR WAREHOUSE DELIVERY W115	20 A	1	P	5			500	6	P	1	20 A	MOTORIZED DOOR CREW STORAGE 3 W104	
	MOTORIZED DOOR WAREHOUSE W116	20 A	1	P	7	500			8	P	1	20 A	MOTORIZED DOOR CREW STORAGE 2 W103	
	MOTORIZED DOOR STORAGE W112	20 A	1	P	9		500		10	P	1	20 A	MOTORIZED DOOR CREW STORAGE 1 W102	
	MOTORIZED DOOR CREW STORAGE 6 W111	20 A	1	P	11			500	12	P	1	20 A	MOTORIZED DOOR ISSUE CENTER W121	
	R Room W122, W127	20 A	1	R	13	540	1490		14	R; P	1	20 A	R LAUNDRY W122 LINT COLLECTOR / DET. PUMP	
	R ISSUE CENTER W121	20 A	1	R	15		720	960	16	P	3	20 A	P SERVICE ROOM W123 WASHER	
	R ISSUE CENTER W121	20 A	1	R	17			720	960	18	--	--	--	--
	R WAREHOUSE W116	20 A	1	R	19	540	960		20	--	--	--	--	--
	R WAREHOUSE W116	20 A	1	R	21		540	0	22	--	1	20 A	SPARE	
	R STORAGE W112	20 A	1	R	23			180	0	24	--	1	20 A	SPARE
	P HAZMAT STORAGE	20 A	2	P	25	500	0		26	--	1	20 A	SPARE	
--	--	--	--	--	27		500	1125	28	P	2	20 A	P CART CHARGERS	
	P FUEL PUMP	20 A	1	P	29			1000	1125	30	--	--	--	--
	R STORAGE W112 SCISSOR LIFT CHARGER	20 A	1	R	31	180	1000			32	P	1	20 A	P FUEL PUMP
	R STORAGE W112 CART CHARGER	20 A	1	R	33			180	0	34	--	1	20 A	SPARE
	SPARE	20 A	1	--	35				0	36	--	1	20 A	SPARE
	SPARE	20 A	1	--	37	0	0			38	--	1	20 A	SPARE
	SPARE	20 A	1	--	39			0	0	40	--	1	20 A	SPARE
--	SPACE	--	--	--	41				0	7085	42	L; R	3	100 A	PANEL WLB
--	SPACE	--	--	--	43	0	7930			44	--	--	--	--
--	SPACE	--	--	--	45			0	6750	46	--	--	--	--
--	SPLIT BUS	--	--	--	47				0	0	48	--	--	SPLIT BUS
--	SPLIT BUS	--	--	--	49	0	0			50	--	--	--	SPLIT BUS
--	SPLIT BUS	--	--	--	51			0	0	52	--	--	--	SPLIT BUS
	P JANITOR W118 EWH	100 A	2	P	53				7000	20	54	M	2	15 A	M FCU W-1
--	--	--	--	--	55	7000	20				56	--	--	--	--
	P W.H. W127 EWH	100 A	2	P	57			7000	0		58	--	1	20 A	SPARE
--	--	--	--	--	59				7000	0	60	--	1	20 A	SPARE
	M EF W-7, W-8, W-9	20 A	1	M	61	1530	1320				62	M	2	20 A	M EUH W-1
	M EF W-3, W-5	20 A	1	M	63			1340	1320		64	--	--	--	--
	M EF W-4	15 A	1	M	65				1130	1020	66	M	1	20 A	M EF W-13, W-14
	M EF W-1	15 A	1	M	67	510	510				68	M	1	20 A	M EF W-6
	M EF W-2	20 A	1	M	69			1590	445		70	M	2	20 A	M FCU W-2, W-3, W-4, W-5
	M EF W-10, W-11, W-12	20 A	1	M	71				1530	445	72	--	--	--	--
	M SCU W-1	20 A	2	M	73	1520	670				74	M	1	15 A	M SF W-1
--	--	--	--	--	75			1520	50		76	M	2	15 A	M BS W-1
	P AIR COMP W106	30 A	2	P	77				3200	50	78	--	--	--	--
--	--	--	--	--	79	3200	0				80	--	1	20 A	SPARE
	SPARE	20 A	1	--	81			0	0		82	--	1	20 A	SPARE
	SPARE	20 A	1	--	83				0	0	84	--	1	20 A	SPARE
						31420.00 VA	26040.00 VA	34465.00 VA							
COMMENTS:						268.7 A	217.0 A	294.1 A							

LOAD TYPE KEY	LOAD CLASSIFICATION	CONNECTED LOAD	AVG. DEMAND...	ESTIMATED DEMAND	PANEL TOTALS	AMPS	KVA
H = HVAC EQUIP	P	50.74 kVA	100.00%	50.74 kVA			
K = KITCHEN	R	24.58 kVA	70.34%	17.29 kVA	TOTAL CONNECTED LOAD:	255.2 A	91.93 kVA
L = LIGHTING	L	0.07 kVA	125.00%	0.08 kVA	TOTAL DEMAND LOAD:	237.1 A	85.41 kVA
M = MOTOR	M	16.54 kVA	104.59%	17.30 kVA	HIGH PHASE:	294 A	34.47 kVA
P = POWER							
R = RECEPTACLE					EQUIPMENT YARD		
W = WATER HEATER							

PANEL: SAL

MOUNTING: Pedestal | **DOUBLE-LUGS:** No | **VOLTS:** 120/208 Wye | **SUPPLY FROM:** TSA
NEMA 3R: Yes | **200% NEUTRAL:** No | **PHASE:** 3 | **LOCATION:**
FEED THRU: No | **I/G BUS:** No | **WIRE:** 4 | **MCB:** 225A-3P
M.L.O.: No | **AIC:** 10,000 | **BUS:** 225A

NOTE	DESCRIPTION	BKR	POLE	TYPE	CIRC	A (VA)	B (VA)	C (VA)	CIRC	TYPE	POLE	BKR	DESCRIPTION	NOTE
	P MAINTENANCE POWER PEDESTAL	30 A	1	P	1	2880	2880		2	P	1	30 A	P MAINTENANCE POWER PEDESTAL	
	P MAINTENANCE POWER PEDESTAL	30 A	1	P	3		2880	2880	4	P	1	30 A	P MAINTENANCE POWER PEDESTAL	
	R MAINTENANCE POWER PEDESTAL	20 A	1	R	5			180	180	6	R	1	20 A	R MAINTENANCE POWER PEDESTAL
	R MAINTENANCE POWER PEDESTAL	20 A	1	R	7	180	180			8	R	1	20 A	R MAINTENANCE POWER PEDESTAL
	P MAINTENANCE POWER PEDESTAL	50 A	2	P	9		4160	4160		10	P	2	50 A	P MAINTENANCE POWER PEDESTAL
--	--	--	--	--	11			4160	4160	12	--	--	--	--
	P MAINTENANCE POWER PEDESTAL	50 A	2	P	13	4160	0			14	--	1	20 A	SPARE
--	--	--	--	--	15		4160	0		16	--	1	20 A	SPARE
	SPARE	20 A	1	--	17			0	0	18	--	1	20 A	SPARE
	SPARE	20 A	1	--	19	0	0			20	--	1	20 A	SPARE
	SPARE	20 A	1	--	21		0	0		22	--	1	20 A	SPARE
	SPARE	20 A	1	--	23			0	4160	24	P	2	50 A	P MAINTENANCE POWER PEDESTAL
	SPARE	20 A	1	--	25	0	4160			26	--	--	--	--
	SPARE	20 A	1	--	27		0	0		28	--	1	20 A	SPARE
	SPARE	20 A	1	--	29			0	0	30	--	1	20 A	SPARE
	SPARE	20 A	1	--	31	0	0			32	--	1	20 A	SPARE
	SPARE	20 A	1	--	33		0	0		34	--	1	20 A	SPARE
	SPARE	20 A	1	--	35			0	0	36	--	1	20 A	SPARE
--	SPACE	--	--	--	37	0	0			38	--	--	--	SPACE
--	SPACE	--	--	--	39		0	0		40	--	--	--	SPACE
--	SPACE	--	--	--	41			0	0	42	--	--	--	SPACE
						14440.00 VA	18240.00 VA	12840.00 VA						
COMMENTS:						122.4 A	154.1 A	107.0 A						

LOAD TYPE KEY	LOAD CLASSIFICATION	CONNECTED LOAD	AVG. DEMAND...	ESTIMATED DEMAND	PANEL TOTALS	AMPS	KVA
H = HVAC EQUIP	P	44.80 kVA	100.00%	44.80 kVA			
K = KITCHEN	R	0.72 kVA	100.00%	0.72 kVA	TOTAL CONNECTED LOAD:	126.4 A	45.52 kVA
L = LIGHTING					TOTAL DEMAND LOAD:	126.4 A	45.52 kVA
M = MOTOR					HIGH PHASE:	154 A	18.24 kVA
P = POWER							
R = RECEPTACLE							
W = WATER HEATER							

PANEL: WHA

MOUNTING: Surface | **DOUBLE-LUGS:** No | **VOLTS:** 480/277 Wye | **SUPPLY FROM:** DBW
NEMA 3R: No | **200% NEUTRAL:** No | **PHASE:** 3 | **LOCATION:** ELEC./DATA W107
FEED THRU: No | **I/G BUS:** No | **WIRE:** 4 | **MCB:** 225A-3P
M.L.O.: No | **AIC:** 22,000 | **BUS:** 225A

NOTE	DESCRIPTION	BKR	POLE	TYPE	CIRC	A (VA)	B (VA)	C (VA)	CIRC	TYPE	POLE	BKR	DESCRIPTION	NOTE
H	SITE LIGHTING	20 A	1	L	1	630	280		2	L	1	20 A	L EXTERIOR	H
	L Room W102, W103, W104, W106, W126, W107,...	20 A	1	L	3		762	3574	4	L	1	20 A	L W116	
	Room W113, W114	20 A	1	L	5			2128	715	6	L	1	20 A	L Room W124, W122, W123, W121, W101, W127
	L Room W118, W119, W117, W120	20 A	1	L	7	2306	420			8	L	1	20 A	SITE LIGHTING EM VEHICLE STAGING
	R WAREHOUSE DELIVERY W115 FORKLIFT CHGR	20 A	1	R	9		3333	4010		10	M	3	25 A	M HP W-1
--	--	--	--	--	11			3333	4010	12	--	--	--	--
--	--	--	--	--	13	3333	4010			14	--	--	--	--
	SPARE	20 A	1	--	15		0	0		16	--	1	20 A	SPARE
	SPARE	20 A	1	--	17			0	0	18	--	1	20 A	SPARE
	SPARE	20 A	1	--	19	0	0			20	--	1	20 A	SPARE
	SPARE	20 A	1	--	21		0	0		22	--	1	20 A	SPARE
	SPARE	20 A	1	--	23			0	0	24	--	1	20 A	SPARE
	SPARE	20 A	1	--	25	0	0			26	--	1	20 A	SPARE
	SPARE	20 A	1	--	27		0	0		28	--	1	20 A	SPARE
	SPARE	20 A	1	--	29			0	0	30	--	1	20 A	SPARE
	SPARE	20 A	1	--	31	0	0			32	--	1	20 A	SPARE
	SPARE	20 A	1	--	33		0	0		34	--	1	20 A	SPARE
--	SPACE	--	--	--	35			0	0	36	--	--	--	SPACE
--	SPACE	--	--	--	37	0	0			38	--	--	--	SPACE
--	SPACE	--	--	--	39		0	0		40	--	--	--	SPACE
--	SPACE	--	--	--	41			0	0	42	--	--	--	SPACE
						10979.33 VA	11678.93 VA	10186.53 VA						
COMMENTS:						40.1 A	42.6 A	36.8 A						

LOAD TYPE KEY	LOAD CLASSIFICATION	CONNECTED LOAD	AVG. DEMAND...	ESTIMATED DEMAND	PANEL TOTALS	AMPS	KVA
H = HVAC EQUIP	R	10.00 kVA	100.00%	10.00 kVA			
K = KITCHEN	L	10.81 kVA	125.00%	13.52 kVA	TOTAL CONNECTED LOAD:	39.5 A	32.84 kVA
L = LIGHTING	M	12.03 kVA	125.00%	15.04 kVA	TOTAL DEMAND LOAD:	46.4 A	38.56 kVA
M = MOTOR					HIGH PHASE:	43 A	11.68 kVA
P = POWER							
R = RECEPTACLE							
W = WATER HEATER							

PANEL: WLB

MOUNTING: Surface | **DOUBLE-LUGS:** No | **VOLTS:** 120/208 Wye | **SUPPLY FROM:** WLA
NEMA 3R: No | **200% NEUTRAL:** No | **PHASE:** 3 | **LOCATION:** ELEC./DATA W107
FEED THRU: No | **I/G BUS:** No | **WIRE:** 4 | **MCB:** M.L.O.
M.L.O.: Yes | **AIC:** 10,000 | **BUS:** 100A

NOTE	DESCRIPTION	BKR	POLE	TYPE	CIRC	A (VA)	B (VA)	C (VA)	CIRC	TYPE	POLE	BKR	DESCRIPTION	NOTE
	R EXTERIOR	20 A	1	R	1	1080	180		2	R	1	20 A	R SHOP/STAGING W117	
	R EXTERIOR	20 A	1	R	3		900	180	4	R	1	20 A	R SHOP/STAGING W117	
	R CHAINSAW CLEANING W125	20 A	1	R	5			720	180	6	R	1	20 A	R SHOP/STAGING W117
	R RESTORATION STORAGE W113	20 A	1	R	7	540	540			8	R	1	20 A	R Room W118, W120, W119
	R RESTORATION STORAGE W113	20 A	1	R	9		540	720		10	R	1	20 A	R SHOP MANAGER W108
	R GARAGE STORAGE W114	20 A	1	R	11			540	180	12	R	1	20 A	R ELEC./DATA W107
	R STORAGE W112	20 A	1	R	13	180	360			14	R	1	20 A	R Room W126, W107
	R STORAGE W112	20 A	1	R	15		180	900		16	R	1	20 A	R SECURE STORAGE W105
	R STORAGE W112	20 A	1	R	17			180	720	18	R	1	20 A	R Room W101, W104, W102, W103
	R STORAGE W112	20 A	1	R	19	720	540			20	R	1	20 A	R Room W104, W103, W102
	R STORAGE W112	20 A	1	R	21		720	1250		22	R	1	20 A	R CREW CONSERVATIONISTS W124
	R Room W111, W110, W109	20 A	1	R	23			540	180	24	R	1	20 A	R CREW CONSERVATIONISTS W124
	R Room W109, W110, W111	20 A	1	R	25	540	360			26	R	1	20 A	R CREW CONSERVATIONISTS W124
	R SHOP/STAGING W117	20 A	1	R	27		900	540		28	R	1	20 A	R CREW CONSERVATIONISTS W124
	R SHOP/STAGING W117	20 A	1	R	29			720	540	30	R	1	20 A	R CREW CONSERVATIONISTS W124
	R SHOP/STAGING W117	20 A	1	R	31	720	360			32	R	1	20 A	R CREW CONSERVATIONISTS W124
	P CLG FAN	20 A	2	P	33			750	350	34	P	1	20 A	P AIR COMP W106
--	--	--	--	--	35				750	1000	36	R	1	20 A	R ELEC./DATA W107 IDF
		20 A	1	L; R	37	965	0				38	--	--	--	SPACE
--	SPACE	--	--	--	39			0	0		40	--	--	--	SPACE
--	SPACE	--	--	--	41				0	500	42	R	1	20 A	W117 CORD REELS
						7085.00 VA	7930.00 VA	6750.00 VA							
COMMENTS:						59.5 A	66.5 A	56.3 A							

LOAD TYPE KEY	LOAD CLASSIFICATION	CONNECTED LOAD	AVG. DEMAND...	ESTIMATED DEMAND	PANEL TOTALS	AMPS	KVA
H = HVAC EQUIP	P	1.85 kVA	100.00%	1.85 kVA			
K = KITCHEN	R	19.85 kVA	75.19%	14.93 kVA	TOTAL CONNECTED LOAD:	60.4 A	21.77 kVA
L = LIGHTING	L	0.07 kVA	125.00%	0.08 kVA	TOTAL DEMAND LOAD:	46.8 A	16.86 kVA
M = MOTOR					HIGH PHASE:	67 A	7.93 kVA
P = POWER							
R = RECEPTACLE							
W = WATER HEATER							

PANEL SCHEDULE SPECIFICATIONS:

1. WHERE PANEL IS INDICATED TO INCLUDE FEED THRU LUGS, PROVIDE FEED THROUGH LUGS AT THE OPPOSITE END OF THE PANELBOARD FROM THE PANELBOARD MAIN LUGS.
2. WHERE PANEL IS INDICATED TO INCLUDE DOUBLE LUGS, PROVIDE A DOUBLE LUG KIT AT THE SAME END OF THE PANELBOARD AS THE PANELBOARD MAIN LUGS.
3. WHERE PANEL IS INDICATED TO INCLUDE 200% NEUTRAL, PROVIDE PANELBOARDS UL LISTED AS HAVING NEUTRAL BUSSES RATED TO CARRY 200 PERCENT OF THE CURRENT CARRYING CAPACITY OF THE PHASE BUSSING. OTHERWISE, NEUTRAL BUSSING TO BE FULL SIZE AND RECTANGULAR.
4. WHERE PANEL IS INDICATED TO INCLUDE AN I/G BUS, PROVIDE PANELBOARDS WITH AN ISOLATED GROUND BUS, DRILLED AND TAPPED FOR NUMBER OF ISOLATED GROUND CONDUCTORS SHOWN, AS WELL AS FOR ALL SPARES AND SPACES SHOWN ON THE PANELBOARD.
5. WHERE PANEL CIRCUIT BREAKER RATING IS SHOWN AS SERIES RATED, PROVIDE CIRCUIT BREAKERS IN PANELBOARD WHICH ARE SERIES RATED WITH THE UPSTREAM SYSTEM FOR THE AVAILABLE FAULT CURRENT. THE PANELBOARD SHALL BE MARKED WITH THE SERIES CONNECTED RATINGS, AS WELL AS ALL MARKING AS REQUIRED BY THE NEC, OR CEC WHERE ADOPTED, 240-83(C).
6. WHERE PANEL IS INDICATED AS RECESSED OR FLUSH MOUNTED, PROVIDE SPARE CONDUITS STUBBED UP INTO THE ACCESSIBLE CEILING SPACE. PROVIDE ONE (1) 3/4" CONDUIT ONLY FOR EACH THREE (3) SPARES OR SPACES, MINIMUM OF TWO (2). EACH CONDUIT SHALL BE TAGGED, CAPPED AND MARKED FOR FUTURE USE.
7. ALL BUSSING SHALL BE TIN PLATED ALUMINUM.
8. ALL CIRCUIT BREAKERS USED AS SWITCHES SHALL BE UL LISTED AND LABELED "SWD" FOR SWITCHING DUTY.
9. PROVIDE BREAKER INTERLOCK WITH ADJACENT BREAKER(S) FOR ANY MULTI-WIRE BRANCH CIRCUIT. BREAKER INTERLOCK GROUPING SHALL BE BY BRANCH CIRCUIT GROUP (i.e. MULTIPLE CIRCUITS SHARING A COMMON NEUTRAL (NEC, OR CEC WHERE ADOPTED, 210.4 (B).) COMMON YOKE (NEC, OR CEC WHERE ADOPTED, 210.7(B).) OR FURNITURE SYSTEM NEC OR CEC WHERE ADOPTED, 605.6 AND 605.7). WHERE AN EXISTING PANEL IS BEING ALTERED OR MODIFIED IN ANY WAY, CONTRACTOR SHALL INCLUDE ALL COSTS IN BASE BID TO ADD BREAKER INTERLOCKS TO EXISTING MULTI-WIRE BRANCH CIRCUITS BASED ON CONTRACTOR'S INVESTIGATION OF EXISTING CONDITIONS.
10. PROVIDE BREAKER LOCK OFF DEVICE ON ANY CIRCUIT BREAKER FEEDING A TRANSFORMER AS REQUIRED, PER NEC, OR CEC WHERE ADOPTED, 450.14. WHERE AN EXISTING PANEL IS BEING ALTERED OR MODIFIED IN ANY WAY, CONTRACTOR SHALL INCLUDE ALL COSTS IN BASE BID TO ADD BREAKER LOCK-OFF DEVICES TO EXISTING TRANSFORMER CIRCUIT BREAKERS BASED ON CONTRACTOR'S INVESTIGATION OF EXISTING CONDITIONS.
11. ALL CIRCUIT BREAKERS SHALL BE BOLT-ON TYPE AND SHALL BE SUITABLE FOR 75 DEGREE AMPACITY CONDUCTORS.
12. PANELS SHALL BE OF THE DEAD FRONT SAFETY TYPE. PANELS SHALL BE MINIMUM 20" WIDE AND 5-3/4" DEEP UNLESS OTHERWISE NOTED ON PLAN.
13. COORDINATE WITH APPLICABLE TRADE TO INSURE RECESSED MOUNTED PANELBOARDS WILL SEAT FLUSH IN THE WALLS PROVIDED. PANEL TRIMS SHALL HAVE CONCEALED DOORS AND FASTENERS WITH FLUSH TYPE COMBINATION LOCK AND CATCH. TWO MILLED TYPE KEYS SUPPLIED WITH EACH PANEL. ALL LOCKS SHALL BE KEYED ALIKE AND EACH DOOR SHALL HAVE A PLASTIC COVERED DIRECTORY FRAME WITH A TYPED IDENTIFICATION CARD OF ALL CIRCUIT AND PANEL NUMBERS FOR BRANCH CIRCUIT PANELBOARDS.
14. UPON PROJECT COMPLETION, CONTRACTOR SHALL INSTALL TYPED AS-BUILT PANEL DIRECTORIES IN EACH PANEL WITHIN THE MFGR-PROVIDED DIRECTORY HOLDER. THE DIRECTORY SHALL CLEARLY IDENTIFY EACH CIRCUIT TO ITS CLEAR, EVIDENT, AND SPECIFIC PURPOSE OR USE. EACH CIRCUIT IDENTITY SHALL INCLUDE SUFFICIENT DETAIL TO ALLOW EACH CIRCUIT TO BE DISTINGUISHED FROM ALL OTHERS PER NEC, OR CEC WHERE ADOPTED, ART 408.1 AND 408.4 . HANDWRITTEN DIRECTORIES ARE UNACCEPTABLE. COPIES OF AS-BUILT PANEL SCHEDULES SHALL BE PLACED IN PANEL DIRECTORIES. E.C. TO INCLUDE ALL COSTS REQUIRED FOR LARGER-THAN-STANDARD CUSTOM PANEL DIRECTORY HOLDERS TO ACCOMMODATE COPIES OF AS-BUILT PANEL SCHEDULES.
15. PANELBOARDS SHALL BE MANUFACTURED BY G.E., CUTLER-HAMMER, SIEMENS, OR SQUARE "D"; FUSED PANEL BOARDS SHALL BE BY COOPER BUSSMANN.
16. PROVIDE SHOP DRAWING SUBMITTAL PER THE ELECTRICAL SPECIFICATION SUBMITTAL REQUIREMENTS FOR EACH PANEL DEPICTING CONFORMANCE WITH THE ABOVE NOTES AND SCHEDULES.

SPECIFIC PANEL SCHEDULE NOTES:

"A" PROVIDE LOCK-ON DEVICE.

"B" PROVIDE LOCK-OFF DEVICE.

"C" PROVIDE SHUNT TRIP DEVICE.

"D" PROVIDE GFCI TYPE DEVICE.

"E" PROVIDE A RED CIRCUIT BREAKER.

"F" PROVIDE A NEW BREAKER TO MATCH THE EXISTING IN PANEL.

"G" EXISTING BREAKER WITH NEW LOAD.

"H" PROVIDE RELAY AS REQUIRED FOR CONTROL OF EXTERIOR LIGHTING BY PHOTOCELL ON / TIMECLOCK OFF. MOUNT RELAY IN SEPARATE BARRIERED COMPARTMENT OF PANELBOARD.

PANEL SCHEDULE INDEX		
XXXX	WLA	WHA
XXXX	SAL	WLB
XXXX	XXXX	XXXX

Plot Date: 3/24/2021 9:12:14 AM
File Name: BIM 360://CCC Willits Residential Center/E_CCC Willits_WAREHOUSE_ 2019-0228A.rvt

IDENTIFICATION STAMP
DIV. OF THE STATE ARCHITECT
APP: 02-118630 INC:
REVIEWED FOR
SS ☐ FLS ☐ ACS ☑
DATE: 04/13/2021

OFFICE OF THE STATE FIRE MARSHAL
APPROVED FIRE AND PANIC ONLY
Approval of this plan does not authorize or approve any omission or deviation from applicable regulations. Final approval is subject to field inspection. One set of approved plans shall be available on the project site at all times.
PERMIT NO.: 20-N 2332-CP
REVIEWED BY: LEO CATALLO, OSFM
DATE: 4 / 1 /2021

DGS
GENERAL SERVICES
Department of General Services
State of California
Real Estate Services Division
Project Management & Development Branch
707 Third Street, Suite 4-105
West Sacramento, California 95605

NICHOLS MELBURG & ROSSETTO
ARCHITECTS + ENGINEERS
300 Knollcrest Drive
Redding, CA. 96002
(530) 222-3300 (530) 222-3538 FAX
http://www.nmrdesign.com

Copyright © 2019
All ideas, designs, arrangements and plans indicated or represented by this drawing are owned by, and the property of, NICHOLS, MELBURG and ROSSETTO and were created, evolved and developed for use on, and in conjunction with, the specified project. None of such ideas, designs, arrangements or plans shall be used by, or disclosed to any person, firm or corporation for any purpose whatsoever without the written permission of NICHOLS, MELBURG and ROSSETTO.

LICENSE STAMPS

REGISTERED PROFESSIONAL ENGINEER RAYMOND W. SWOLF No. E15610 12/31/2021 STATE OF CALIFORNIA
Date Signed: 3/25/2021

CONSULTANT
tklsc
COLLABORATIVE
11870 Pierce Street, Suite 160
Riverside, California 92505
951.299.4160 www.tk1sc.com
Project Leader - Jerry Leonhardt
Electrical Lead - Reid Cordry
tk1sc Job # 2019-0228A

DRAWING STATUS
CONSTRUCTION DOCUMENTS

ISSUE

No.	Date	Description
1	10/20/2020	INITIAL PLAN REVIEW
2	01/22/2021	AGENCY RESUBMITTAL
3	03/22/2021	AGENCY RESUBMITTAL

If drawing is not 30" x 42" it is a reduced print

PROJECT
RESIDENTIAL CENTER, UKIAH: REPLACEMENT OF EXISTING RESIDENTIAL CENTER
440 EAST HILL ROAD
WILLITS, CALIFORNIA 95490
MENDOCINO COUNTY
CALIFORNIA CONSERVATION CORP

Supervisor	Designed	Drawn
		Author

DSA Application No.
XX-XXXXXX

SHEET TITLE
WAREHOUSE BUILDING PANEL SCHEDULES

DGS Project Number	NMR Project Number
XXXXX	18-6456

Reference North: NORTH
Sheet Scale: 12" = 1'-0"
Sheet Number: E407W

ISSUE DATE
July 9, 2021

STATE OF CALIFORNIA
Indoor Lighting
NRCC-LTI-E
CALIFORNIA ENERGY COMMISSION

CERTIFICATE OF COMPLIANCE			NRCC-LTI-E
Project Name:	Replacement of Existing Residential Center	**Report Page:**	**(Page 6 of 7)**
Project Address:	440 East Hill Road	**Date Prepared:**	10/20/2020

T. DECLARATION OF REQUIRED CERTIFICATES OF INSTALLATION

Selections have been made based on information provided in this document. If any selection have been changed by permit applicant, an explanation should be included in Table E. Additional Remarks. These documents must be provided to the building inspector during construction and can be found online at https://www.energy.ca.gov/title24/2019standards/2019_compliance_documents/Nonresidential_Documents/NRCI/

Yes	No	Form/Title	Field Inspector Pass	Field Inspector Fail
●	○	NRCI-LTI-01-E - Must be submitted for all buildings	☐	☐
○	●	NRCI-LTI-02-E- Must be submitted for a lighting control system, or for an Energy Management Control System (EMCS), to be recognized for compliance.	☐	☐
○	●	NRCI-LTI-04-E - Must be submitted for two interlocked systems serving an auditorium, a convention center, a conference room, a multipurpose room or a theater to be recognized for compliance.	☐	☐
○	●	NRCI-LTI-05-E: Must be submitted for a Power Adjustment Factor (PAF) to be recognized for compliance.	☐	☐
○	●	NRCI-LTI-06-E: Must be submitted for additional wattage installed in a video conferencing studio to be recognized for compliance.	☐	☐

U. DECLARATION OF REQUIRED CERTIFICATES OF ACCEPTANCE

Selections have been made based on information provided in this document. If any selection have been changed by the permit applicant, an explanation should be included in Table E. Additional Remarks. These documents must be provided to the building inspector during construction and any with "-A" in the form name must be completed through an Acceptance Test Technician Certification Provider (ATTCP). For more information visit: http://www.energy.ca.gov/title24/attcp/providers.html

Yes	No	Form/Title	Field Inspector Pass	Field Inspector Fail
●	○	NRCA-LTI-02-A - Must be submitted for occupancy sensors and automatic time switch controls.	☐	☐
○	●	NRCA-LTI-03-A - Must be submitted for automatic daylight controls.	☐	☐
●	○	NRCA-LTI-04-A - Must be submitted for demand responsive lighting controls.	☐	☐
○	●	NRCA-LTI-05-A - Must be submitted for institutional tuning power adjustment factor (PAF)	☐	☐

Registration Number: | Registration Date/Time: | Registration Provider: EnergySoft
CA Building Energy Efficiency Standards - 2019 Nonresidential Compliance | Report Version: 2019.0.001 Schema Version: rev 20190401 | Report Generated: 2020-10-20 09:13:45

STATE OF CALIFORNIA
Indoor Lighting
NRCC-LTI-E
CALIFORNIA ENERGY COMMISSION

CERTIFICATE OF COMPLIANCE			NRCC-LTI-E
Project Name:	Replacement of Existing Residential Center	**Report Page:**	**(Page 7 of 7)**
Project Address:	440 East Hill Road	**Date Prepared:**	10/20/2020

DOCUMENTATION AUTHOR'S DECLARATION STATEMENT

Documentation Author Name: Ray Swartz	Documentation Author Signature:
Company: tk1sc	Signature Date: 2020-10-20
Address: 11870 Pierce Street, Suite 160	CEA/ HERS Certification Identification (if applicable):
City/State/Zip: Riverside CA 92505	Phone: 951-299-4160

RESPONSIBLE PERSON'S DECLARATION STATEMENT
I certify the following under penalty of perjury, under the laws of the State of California:

1. The information provided on this Certificate of Compliance is true and correct.
2. I am eligible under Division 3 of the Business and Professions Code to accept responsibility for the building design or system design identified on this Certificate of Compliance (responsible designer)
3. The energy features and performance specifications, materials, components, and manufactured devices for the building design or system design identified on this Certificate of Compliance conform to the requirements of Title 24, Part 1 and Part 6 of the California Code of Regulations.
4. The building design features or system design features identified on this Certificate of Compliance are consistent with the information provided on other applicable compliance documents, worksheets, calculations, plans and specifications submitted to the enforcement agency for approval with this building permit application.
5. I will ensure that a completed signed copy of this Certificate of Compliance shall be made available with the building permit(s) issued for the building, and made available to the enforcement agency for all applicable inspections. I understand that a completed signed copy of this Certificate of Compliance is required to be included with the documentation the builder provides to the building owner at occupancy.

Responsible Designer Name: Ray Swartz	Responsible Designer Signature:
Company: tk1sc	Date Signed: 2020-10-20
Address: 11870 Pierce Street, Suite 160	License: E15610
City/State/Zip: Riverside CA 92505	Phone: 951-299-4160

Registration Number: | Registration Date/Time: | Registration Provider: EnergySoft
CA Building Energy Efficiency Standards - 2019 Nonresidential Compliance | Report Version: 2019.0.001 Schema Version: rev 20190401 | Report Generated: 2020-10-20 09:13:45

STATE OF CALIFORNIA
Indoor Lighting
NRCC-LTI-E
CALIFORNIA ENERGY COMMISSION

CERTIFICATE OF COMPLIANCE			NRCC-LTI-E
Project Name:	Replacement of Existing Residential Center	**Report Page:**	**(Page 3 of 7)**
Project Address:	440 East Hill Road	**Date Prepared:**	10/20/2020

F. INDOOR LIGHTING FIXTURE SCHEDULE

17	17 - 2x2 LED	No	No	21	JAB Lamp	2	No	42	☐	☐
18	18 - 1x4 Cable Mounted LED	No	No	87	JAB Lamp	45	No	3,915	☐	☐
3	3 - LED Striplight 4'	No	No	16	JAB Lamp	2	No	32	☐	☐
5	5 - 1x4 Recessed LED	No	No	29.8	JAB Lamp	1	No	29.8	☐	☐
7	7 - LED Surface - Shower	No	No	12	JAB Lamp	1	No	12	☐	☐
9	9 - Recessed LED Downlight	No	No	11	JAB Lamp	4	No	44	☐	☐
							Total Designed Watts: CONDITIONED SPACES		5,571.6	

[1]*FOOTNOTE: Design Watts for small aperture and color changing luminaires which qualify per §140.6(a)4B is adjusted to be 75% of their rated wattage. Table F automatically makes this adjustment, the permit applicant should enter full rated wattage in column 05.*

G. MODULAR LIGHTING SYSTEMS

This section does not apply to this project.

H. INDOOR LIGHTING CONTROLS (Not including PAFs)

*This table includes lighting controls for conditioned and unconditioned spaces. When an control having a * is shown, the notes section of this table provides more detail on how compliance is achieved. The lighting controls section of the Compliance Summary Table on the first page will show "DOES NOT COMPLY" if the notes are left blank.*

Building Level Controls

01	02	03	
Mandatory Demand Response §110.12(c)	Shut-off controls §130.1(c)	Field Inspector Pass	Field Inspector Fail
Required 10,000 SF	Whole Building Auto Time Switch	☐	☐

Area Level Controls

04	05	06	07	08	09	10	11	12	
Area Description	Complete Building or Area Category Primary Function Area	Area Controls §130.1(a)	Multi-Level Controls §130.1(b)	Shut-Off Controls §130.1(c)	Primary/Sky lit Daylighting §130.1(d)	Secondary Daylighting §140.6(d)	Interlocked Systems §140.6(a)1	Field Inspector Pass	Field Inspector Fail

Registration Number: | Registration Date/Time: | Registration Provider: EnergySoft
CA Building Energy Efficiency Standards - 2019 Nonresidential Compliance | Report Version: 2019.0.001 Schema Version: rev 20190401 | Report Generated: 2020-10-20 09:13:45

STATE OF CALIFORNIA
Indoor Lighting
NRCC-LTI-E
CALIFORNIA ENERGY COMMISSION

CERTIFICATE OF COMPLIANCE			NRCC-LTI-E
Project Name:	Replacement of Existing Residential Center	**Report Page:**	**(Page 4 of 7)**
Project Address:	440 East Hill Road	**Date Prepared:**	10/20/2020

H. INDOOR LIGHTING CONTROLS (Not including PAFs)

*NOTES: Controls with a * require a note in the space below explaining how compliance is achieved. EX: Conference 1: Primary/Skylight Daylighting: Exempt because less than 120 watts of general lighting; EXCEPTION 1 to §130.1(d)2*	13 Plan Sheet Showing Daylit Zones:

I. LIGHTING POWER ALLOWANCE: COMPLETE BUILDING OR AREA CATEGORY METHODS

Each area complying using the Complete Building or Area Category Methods per §140.6(b) are included in this table. Column 06 indicates if additional lighting power allowances per §140.6(c) or adjustments per §140.6(a) are being used .

Conditioned Spaces

01	02	03	04	05	06	
Area Description	Complete Building or Area Category Primary Function Area	Allowed Density (W/ft²)	Area (ft²)	Allowed Wattage (Watts)	Additional Allowance / Adjustment Area Category	PAF
Restroom	Restrooms	0.65	149	96.85	No	No
Elec/Mech/Riser	Electrical Mechancial Telephone Room	0.4	245	98	No	No
Office <= 250	Office 250 square feet or less	0.7	129	90.3	No	No
Office >250	Office greater than 250 square feet	0.65	734	477.1	No	No
Open Office	Office Open Plan	0.6	756	453.6	No	No
Corridor	Corridor Area	0.6	279	167.4	No	No
Storage/Other	All Other Space Types	0.4	1,005	402	No	No
Work/Copy Rooms	Copy Room	0.5	73	36.5	No	No
Warehouse	Warehouse	0.45	10,017	4,507.65	No	No
		TOTALS:	13,387	6,329.4	See Tables J, or P for detail	

J. ADDITIONAL ALLOWANCE: AREA CATEGORY METHOD QUALIFYING LIGHTING SYSTEM

This section does not apply to this project.

K. TAILORED METHOD GENERAL LIGHTING POWER ALLOWANCE

This section does not apply to this project.

Registration Number: | Registration Date/Time: | Registration Provider: EnergySoft
CA Building Energy Efficiency Standards - 2019 Nonresidential Compliance | Report Version: 2019.0.001 Schema Version: rev 20190401 | Report Generated: 2020-10-20 09:13:45

STATE OF CALIFORNIA
Indoor Lighting
NRCC-LTI-E
CALIFORNIA ENERGY COMMISSION

CERTIFICATE OF COMPLIANCE			NRCC-LTI-E
Project Name:	Replacement of Existing Residential Center	**Report Page:**	**(Page 5 of 7)**
Project Address:	440 East Hill Road	**Date Prepared:**	10/20/2020

L. ADDITIONAL LIGHTING ALLOWANCE: TAILORED WALL DISPLAY

This section does not apply to this project.

M. ADDITIONAL LIGHTING ALLOWANCE: TAILORED FLOOR AND TASK LIGHTING

This section does not apply to this project.

N. ADDITIONAL LIGHTING ALLOWANCE: TAILORED ORNAMENTAL/SPECIAL EFFECTS

This section does not apply to this project.

O. ADDITIONAL LIGHTING ALLOWANCE: TAILORED VERY VALUABLE MERCHANDISE

This section does not apply to this project.

P.POWER ADJUSTMENT: LIGHTING CONTROL CREDIT (POWER ADJUSTMENT FACTOR (PAF))

This section does not apply to this project.

Q. RATED POWER REDUCTION COMPLIANCE FOR ALTERATIONS

This section does not apply to this project.

R. 80% LIGHTING POWER FOR ALLALTERATIONS - CONTROLS EXCEPTIONS

This section does not apply to this project.

S. DAYLIGHT DESIGN POWER ADJUSTMENT FACTOR (PAF)

This section does not apply to this project.

Registration Number: | Registration Date/Time: | Registration Provider: EnergySoft
CA Building Energy Efficiency Standards - 2019 Nonresidential Compliance | Report Version: 2019.0.001 Schema Version: rev 20190401 | Report Generated: 2020-10-20 09:13:45

STATE OF CALIFORNIA
Indoor Lighting
NRCC-LTI-E
CALIFORNIA ENERGY COMMISSION

CERTIFICATE OF COMPLIANCE			NRCC-LTI-E
Project Name:	Replacement of Existing Residential Center	**Report Page:**	**(Page 1 of 7)**
Project Address:	440 East Hill Road	**Date Prepared:**	10/20/2020

This document is used to demonstrate compliance with requirements in §110.9, §110.12(c), §130.0, §130.1, §140.6 and §141.0(b)2 for indoor lighting scopes using the prescriptive path.

A. GENERAL INFORMATION

01	Project Location (city)	Willits		04	Total Conditioned Floor Area (ft²)	13,387	
02	Climate Zone	2		05	Total Unconditioned Floor Area (ft²)	0	
03	Occupancy Types Within Project (select all that apply):			06	# of Stories (Habitable Above Grade)	1	
☒ Office	☐ Retail	☒ Warehouse	☐ Hotel/Motel	☐ School	☒ Support Areas		
☐ Parking Garage	☐ High-Rise Residential	☐ Relocatable	☐ Healthcare	☒ Other (Write in)	See Table I		

B. PROJECT SCOPE

This table includes any lighting systems that are within the scope of the permit application and are demonstrating compliance using the prescriptive path outlined in §140.6 or §141.0(b)2 for alterations.

Scope of Work	Conditioned Spaces		Unconditioned Spaces	
01	02	03	04	05
My Project Consists of (check all that apply):	Calculation Method	Area (ft²)	Calculation Method	Area (ft²)
☒ New Lighting System	Area Category Method	13387	Area Category Method	0
☐ New Lighting System - Parking Garage				
☐ Altered Lighting System				
Total Area of Work (ft²)	13387		0	

Registration Number: | Registration Date/Time: | Registration Provider: EnergySoft
CA Building Energy Efficiency Standards - 2019 Nonresidential Compliance | Report Version: 2019.0.001 Schema Version: rev 20190401 | Report Generated: 2020-10-20 09:13:45

STATE OF CALIFORNIA
Indoor Lighting
NRCC-LTI-E
CALIFORNIA ENERGY COMMISSION

CERTIFICATE OF COMPLIANCE			NRCC-LTI-E
Project Name:	Replacement of Existing Residential Center	**Report Page:**	**(Page 2 of 7)**
Project Address:	440 East Hill Road	**Date Prepared:**	10/20/2020

C. COMPLIANCE RESULTS

If any cell on this table says "DOES NOT COMPLY" or "COMPLIES with Exceptional Conditions" refer to Table D, for guidance.

Lighting in conditioned and unconditioned spaces must not be combined for compliance per §140.6(b)1	Allowed Lighting Power per §140.6(b) (Watts) 01 Complete Building §140.6(c)1 (See Table I)	02 Area Category §140.6(c)2 (See Table I)	03 Area Category Additional §140.6(c)2(G) (+) (See Table J)	04 Tailored §140.6(c)3 (+) (See Table K)	=	05 Total Allowed (Watts)	≥	Adjusted Lighting Power per §140.6(a) (Watts) 06 Total Designed (Watts) (See Table F)	07 Adjustments PAF Lighting Control Credits §140.6(a)2 (-) (See Table P)	=	08 Total Adjusted (Watts) *Includes Adjustments	Compliance Results 09
Conditioned	0	6,329.4	0	0	=	6329.4	≥	5,571.6	0	=	5571.6	**05 must be >= 08 §140.6**
Unconditioned	0	0	0	0	=		≥	0	0	=		
								Controls Compliance (See Table H for Details)				COMPLIES
								Rated Power Reduction Compliance (See Table Q for Details)				COMPLIES

D. EXCEPTIONAL CONDITIONS

This table is auto-filled with uneditable comments because of selections made or data entered in tables throughout the form.

E. ADDITIONAL REMARKS

This table includes remarks made by the permit applicant to the Authority Having Jurisdiction.

F. INDOOR LIGHTING FIXTURE SCHEDULE

This table includes all permanent designed lighting and all portable lighting in offices.

Designed Wattage: Conditioned Spaces

01	02	03	04	05	06	07	08	09	10	
Name or Item Tag	Complete Luminaire Description	Modular (Track) Fixture	Small Aperture & Color Change[1]	Watts per luminaire[2]	How is Wattage determined	Total Number of Luminaires	Exempt per §140.6(a)3	Design Watts	Field Inspector Pass	Field Inspector Fail
1	1 -2x4 LED	No	No	31.2	JAB Lamp	9	No	280.8	☐	☐
13	13 - 1x4 LED	No	No	32	JAB Lamp	38	No	1,216	☐	☐

Registration Number: | Registration Date/Time: | Registration Provider: EnergySoft
CA Building Energy Efficiency Standards - 2019 Nonresidential Compliance | Report Version: 2019.0.001 Schema Version: rev 20190401 | Report Generated: 2020-10-20 09:13:45

TITLE 24 GENERAL NOTE

CONTRACTOR SHALL BE RESPONSIBLE FOR ALL WORK ASSOCIATED WITH FINAL INSPECTION AND APPLICABLE ACCEPTANCE REQUIREMENT PROCEDURES. INCLUDE ALL COSTS IN THE BASE BID. THIS SHALL INCLUDE, BUT NOT BE LIMITED TO, CONSTRUCTION INSPECTION, MEASUREMENTS, MONITORING, FUNCTIONAL TESTING, CALIBRATING, ETC. CONTRACTOR SHALL ASSUME THE ROLE OF "FIELD TECHNICIAN" AND "RESPONSIBLE PERSON" AS DEFINED IN STATE OF CALIFORNIA 2019 BUILDING ENERGY EFFICIENCY STANDARDS NONRESIDENTIAL COMPLIANCE MANUAL SECTION 13.2.2.

SEE STATE OF CALIFORNIA 2019 BUILDING ENERGY EFFICIENCY STANDARDS SECTIONS 10-103(a)3A AND 10-103(a)3B AND SECTION 130.4 FOR MORE INFORMATION.

SEE STATE OF CALIFORNIA 2019 BUILDING ENERGY EFFICIENCY STANDARDS NONRESIDENTIAL COMPLIANCE MANUAL CHAPTER 13 FOR MORE DETAILED REQUIREMENTS / INFORMATION.

SEE STATE OF CALIFORNIA 2019 BUILDING ENERGY EFFICIENCY STANDARDS RESIDENTIAL COMPLIANCE MANUAL CHAPTER 2 FOR MORE DETAILED REQUIREMENTS / INFORMATION.

PROVIDE COMPLETED INSTALLATION CERTIFICATE(S) AND CERTIFICATE(S) OF ACCEPTANCE AS REQUIRED TO THE SATISFACTION OF THE ENFORCEMENT AGENCY.

TITLE 24 PROCEDURES FOR TESTING AND ADJUSTING

CONTRACTOR SHALL BE RESPONSIBLE FOR ALL WORK ASSOCIATED WITH FINAL INSPECTION AND APPLICABLE ACCEPTANCE REQUIREMENT PROCEDURES. INCLUDE ALL COSTS IN THE BASE BID. THIS SHALL INCLUDE, BUT NOT BE LIMITED TO, CONSTRUCTION INSPECTION, MEASUREMENTS, MONITORING, FUNCTIONAL TESTING, CALIBRATING, ETC. CONTRACTOR SHALL ASSUME THE ROLE OF "FIELD TECHNICIAN" AND "RESPONSIBLE PERSON" AS DEFINED IN STATE OF CALIFORNIA 2019 BUILDING ENERGY EFFICIENCY STANDARDS NONRESIDENTIAL COMPLIANCE MANUAL SECTION 13.2.2.

LIGHTING CONTROL ACCEPTANCE TESTING AND ADJUSTING PROCEDURES – REFER TO NRCA-LTI-02-A DOCUMENTS.

AUTOMATIC DAYLIGHT CONTROL ACCEPTANCE TESTING AND ADJUSTING PROCEDURES – REFER TO NRCA-LTI-03-A DOCUMENTS.

DEMAND RESPONSE LIGHTING CONTROL ACCEPTANCE TESTING AND ADJUSTING PROCEDURES – REFER TO NRCA-LTI-04-A DOCUMENTS.

INSTITUTIONAL TUNING PAF ACCEPTANCE TESTING AND ADJUSTING PROCEDURES – REFER TO NRCA-LTI-05-A DOCUMENTS.

OUTDOOR LIGHTING CONTROL ACCEPTANCE TESTING AND ADJUSTING PROCEDURES – REFER TO NRCA-LTO-02-A DOCUMENTS.

ALL LIGHTING CONTROLS TESTING AND ADJUSTING DOCUMENTS NOTED ABOVE ARE AVAILABLE FROM THE CALIFORNIA ENERGY COMMISSION WEB SITE AT:

https://ww2.energy.ca.gov/title24/2019standards/2019_compliance_documents/Nonresidential_Documents/NRCA/

IDENTIFICATION STAMP
DIV. OF THE STATE ARCHITECT
APP: 02-118630 INC:
REVIEWED FOR
SS ☐ FLS ☐ ACS ☑
DATE: 04/13/2021

OFFICE OF THE STATE FIRE MARSHAL
APPROVED FIRE AND PANIC ONLY
Approval of this plan does not authorize or approve any omission or deviation from applicable regulations. Final approval is subject to field inspection. One set of approved plans shall be available on the project site at all times.
PERMIT NO.: 28-N-3332-CP
REVIEWED BY: LEO CATALLO, OSFM
DATE: 4/ /2021

DGS
GENERAL SERVICES
Department of General Services
State of California
Real Estate Services Division
Project Management & Development Branch
707 Third Street, Suite 4-105
West Sacramento, California 95605

NICHOLS MELBURG & ROSSETTO ARCHITECTS + ENGINEERS
300 Knollcrest Drive
Redding, CA. 96002
(530) 222-3300 (530) 222-3538 FAX
http://www.nmrdesign.com

Copyright © 2019
All ideas, designs, arrangements and plans indicated or represented by this drawing are owned by, and the property of, NICHOLS, MELBURG and ROSSETTO and were created, evolved and developed for use on, and in conjunction with, the specified project. None of such ideas, designs, arrangements or plans shall be used by, or disclosed to any person, firm or corporation for any purpose whatsoever without the written permission of NICHOLS, MELBURG and ROSSETTO

LICENSE STAMPS

REGISTERED PROFESSIONAL ENGINEER RAYMOND W. SWARTZ No. E15610 12/31/2021 ELECTRICAL STATE OF CALIFORNIA
Date Signed: 3/25/2021

CONSULTANT
tk1sc COLLABORATIVE
11870 Pierce Street, Suite 160
Riverside, California 92505
951.299.4160 www.tk1sc.com
Project Leader - Jerry Leonhardt
Electrical Lead - Reid Cordry
tk1sc Job #:2019-0228A

DRAWING STATUS
CONSTRUCTION DOCUMENTS

ISSUE

No.	Date	Description
1	10/20/2020	INITIAL PLAN REVIEW
2	01/22/2021	AGENCY RESUBMITTAL
3	03/22/2021	AGENCY RESUBMITTAL

If drawing is not 30" x 42" it is a reduced print

PROJECT
RESIDENTIAL CENTER, UKIAH: REPLACEMENT OF EXISTING RESIDENTIAL CENTER
440 EAST HILL ROAD
WILLITS, CALIFORNIA 95490
MENDOCINO COUNTY
CALIFORNIA CONSERVATION CORP

Supervisor	Designed	Drawn
		Author

DSA Application No.
02-118630

SHEET TITLE
TITLE 24 WAREHOUSE BUILDING

DGS Project Number	NMR Project Number
000000000001826	18-6456

Reference North | Sheet Scale

Sheet Number
E505W

ISSUE DATE
July 9, 2021

Plot Date: 3/22/2021 9:00:10 AM
File Name: BIM 360://CCC Willits Residential Center/E_CCC Willits_COMMON_2019-0228A.rvt

FEEDER SCHEDULE

FEEDER	CONDUIT AND CONDUCTORS	LOAD (A)	DISTANCE (FT)	V.D. (%)	AVAIL.FAULT CURRENT (A)	NOTES
MSA-1	(2) 3"C. 4#400KCMIL & 1# 1/0 GRD (EACH)	(480)	1250'	1.4	<10K	TO PV ALTERNATE ENERGY SYSTEM
MSA-2	(3) 3"C. 4#300KCMIL & 1#1 GRD	(480)	720'	1.9	17.6K	TO DISTRIBUTION BOARD "DBW"
MSA-3	(2) 3"C. 4#300KCMIL & 1#1 GRD	(480)	300'	.7	24.2K	TO TRANSFER SWITCH "ATSMP"
MSA-4	2-1/2"C. 4#4/0 & 1#4 GRD	(180)	515'	2.0	<10K	TO PANEL "EHA" -
MSA-5	3-1/2"C. 4#500KCMIL & 1#2 GRD	(320)	510'	1.65	11.8K	TO PANEL "RHA" -
MSA-6	(3) 3"C. 3#300KCMIL & 1# 1/0 GRD	(640)	445'	1.6	24.4K	TO TRANSFORMER "TH" -
MSA-7	2-1/2"C. 4#4/0 & 1#4 GRD	(180)	180'	.72	18.4K	TO PANEL "AHA" -
DBW-1	2-1/2"C. 4#4/0 & 1#4 GRD	(180)	25'	.1	16.1K	TO PANEL "WHA" -
DBW-2	1-1/2"C.3#4 & 1#6 GRD	(56)	10'	.05	13.6K	TO TRANSFORMER "TWD" -
DBW-3	1-1/2"C. 3#2/0 & 1#6 GRD	(140)	25'	.1	15.5K	TO TRANSFORMER "TW" -
DBW-4	1-1/2"C. 3#2/0 & 1#6 GRD	(90)	600'	1.9	<10K	TO TRANSFORMER "TSA" -
TW-1	3-1/2"C. 4#500KCMIL & 1#2 GRD	(280)	20'	.12	<10K	TO PANEL "WLA" -
TSA-1	2"C. 4#1/0 & 1#6 GRD	(120)	10'	.13	<10K	TO PANEL "SAL" -
TWD-1	2"C. 4#1 & 1#6 GRD	120	140'	2.24	<10K	TO DRYER -
DBMP-1	3-1/2"C. 4#500KCMIL & 1#2 GRD	(320)	15'	.05	28.8K	TO PANEL "MPHA" -
DBMP-2	3-1/2"C. 4#500KCMIL & 1#2 GRD	(320)	20'	.06	28.3K	TO PANEL "MPHK" -
DBMP-3	1-1/2"C. 3#2/0 & 1#6 GRD	(140)	20'	.1	25.7K	TO TRANSFORMER "TMP" -
TMP-1	3-1/2"C. 4#500KCMIL & 1#2 GRD	(280)	10'	.06	<10K	TO PANEL "MPLA" -
MPLA-1	1-1/4"C. 4#2 & 1#8 GRD	(80)	10'	.13	<10K	TO PANEL "MPLB" -
EHA-1	1-1/4"C. 3#2 & 1#8 GRD	(80)	10'	.06	<10K	TO TRANSFORMER "TE" -
TE-1	2-1/2"C. 4#4/0 & 1#4 GRD	(180)	10'	.09	<10K	TO PANEL "ELA" -
RHA-1	2"C. 3#4/0 & 1# 4 GRD	(180)	10'	.04	11.6K	TO TRANSFORMER "TR" -
TR-1	3-1/2"C. 4#500KCMIL & 1#1/0 GRD	(320)	10'	.07	<10K	TO PANEL "RLA" -
RLA-1	2-1/2"C. 4#4/0 & 1# 4 GRD	(180)	10'	.09	<10K	TO PANEL "RLB" -
TH-1	(4) 3"C. 4#350KCMIL & 1#3/0 GRD (EACH)	(960)	10'	.08	18.8K	TO DISTRIBUTION BOARD "DBH"
DBH-1	3"C. 4#350KCMIL & 1#1 GRD	(180)	340'	1.9	<10K	TO PANEL "CA" -
DBH-2	2"C. 4#1/0 & 1# 6 GRD	(120)	175'	2.1	<10K	TO PANEL "RA" -
DBH-3	2"C. 4#1/0 & 1# 6 GRD	(120)	65'	.8	<10K	TO PANEL "RB" -
DBH-4	2"C. 4#1/0 & 1# 6 GRD	(120)	45'	.6	10.7K	TO PANEL "RC" -
DBH-5	2"C. 4#2/0 & 1#4 GRD	(120)	200'	1.9	<10K	TO PANEL "RD" -
DBH-6	2-1/2"C. 4#4/0 & 1#2 GRD	(120)	305'	1.9	<10K	TO PANEL "RE" -
DBH-7	2-1/2"C. 4#4/0 & 1#2 GRD	(120)	350'	2.1	<10K	TO PANEL "RF" -
AHA-1	1-1/2"C. 3#2/0 & 1#6 GRD	(140)	20'	.06	16.5K	TO TRANSFORMER "TA" -
TA-1	3-1/2"C. 4#500KCMIL & 1#1/0 GRD	(280)	15'	.09	<10K	TO PANEL "ALA" -
GMP-1	(2) 3"C. 4#300KCMIL & 1#1 GRD	(480)	150'	1.86	35.5K	TO GENERATOR DOCKING STATION "GSD"
ATSMP-1	(2) 3"C. 4#300KCMIL & 1#1 GRD	(480)	50'	.19	30.6K	TO DISTRIBUTION BOARD "DBMP"
MPBH-1	1"C. 3#6 & 1#10 GRD	(40)	25'	.18	<10K	TO TRANSFORMER TMPK
TMPK-1	1-1/4"C. 4#2 & 1 #8 GRD	(80)	125'	1.34	<10K	TO PANEL MPLK -
WLA-1	1-1/4C. 4#2 & 1#8 GRD	(80)	10'	.13	<10K	TO PANEL "WLB" -

GENERAL FEEDER SCHEDULE NOTES:

1. ALL FEEDERS SHOWN, UNLESS SPECIFICALLY NOTED OTHERWISE, ARE PRESUMED TO BE ROUTED IN METAL RACEWAYS. IF P.V.C. CONDUITS ARE UTILIZED, THE CONTRACTOR SHALL PROVIDE AN EQUIPMENT GROUND PER CEC TABLE 250.122 OR, WHERE REQUIRED, PROVIDE A MAIN BONDING JUMPER PER CEC TABLE 250.66 AND INCREASE THE CONDUIT SIZE ACCORDINGLY.
2. LOADS INDICATED WITH " ( ) " REPRESENT WORST CASE LOAD IN AMPS.
3. DISTANCE SHOWN IS FOR DESIGN PURPOSES ONLY. IT IS NOT A MATERIAL TAKEOFF.
4. VOLTAGE DROP VALUE INDICATED IS AT THE END OF THE FEEDER.
5. AVAILABLE FAULT CURRENT VALUE AT THE END OF THE FEEDER INDICATED. CALCULATIONS ARE BASED UPON INITIAL VALUES RECEIVED FROM THE SERVING UTILITY AND THE LENGTH AND IMPEDANCE OF THE FEEDER. THE SHORT CIRCUIT CURRENT RATING, EQUIPMENT BUS BRACING, AND/OR AMP INTERRUPTING CURRENT OF EQUIPMENT CONNECTED ON THE LOAD SIDE OF THE FEEDER SHALL BE GREATER THAN THE AVAILABLE FAULT CURRENT.

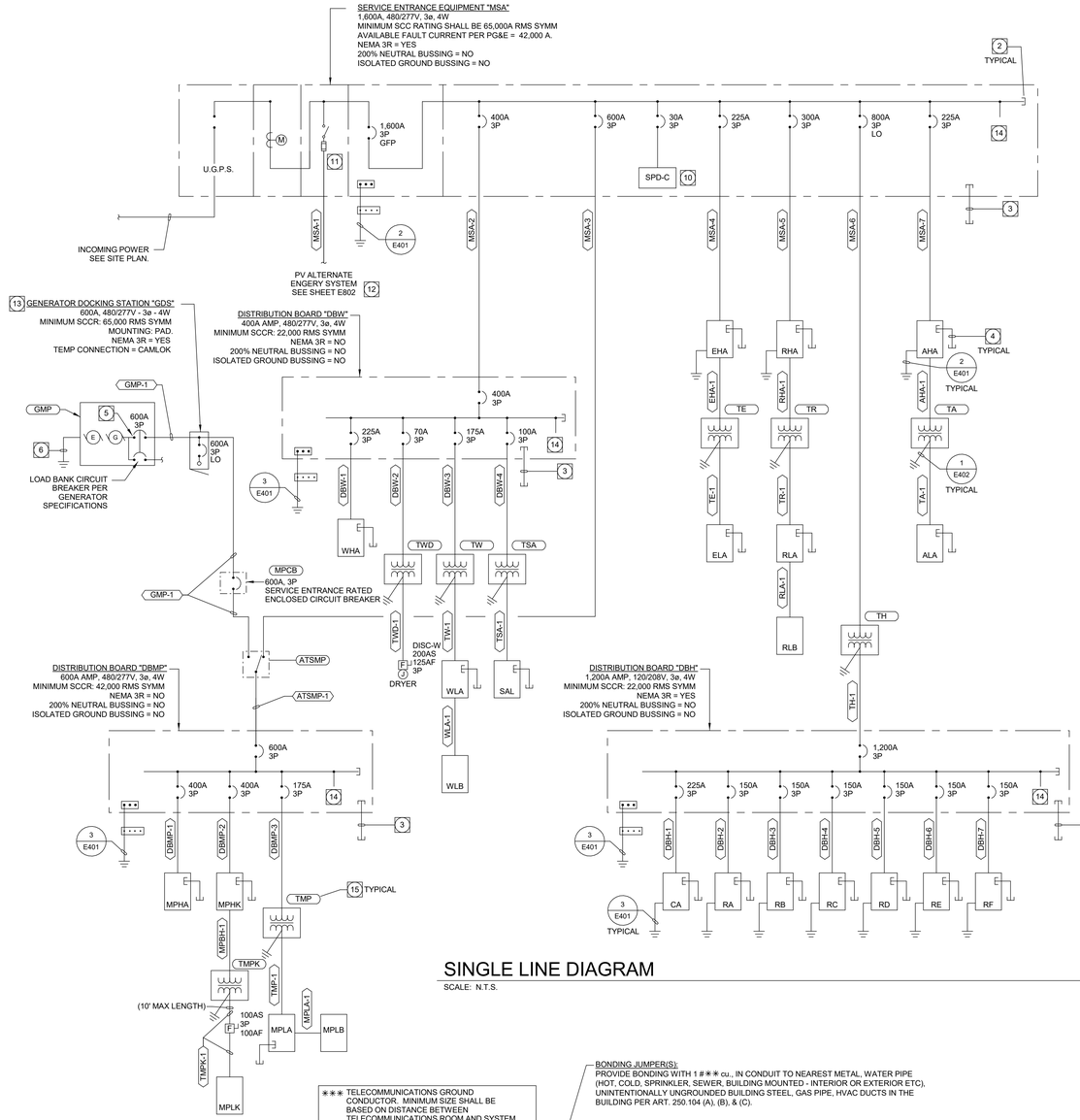

SINGLE LINE DIAGRAM

SCALE: N.T.S.

1

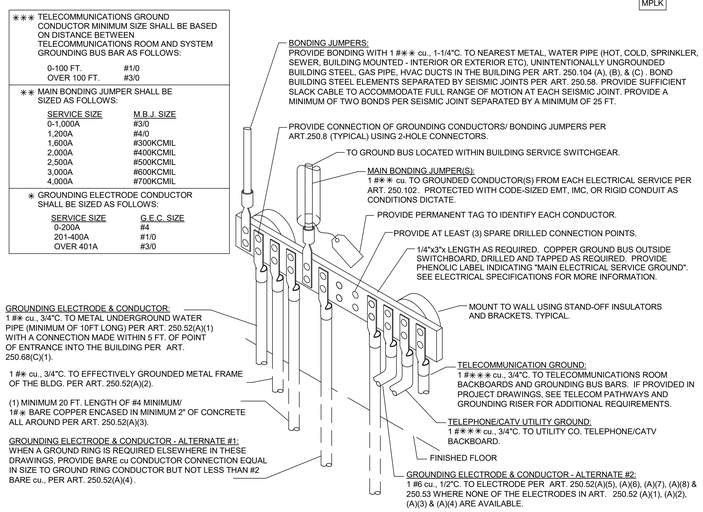

MAIN SERVICE SYSTEM GROUNDING DETAIL

SCALE: NTS

2

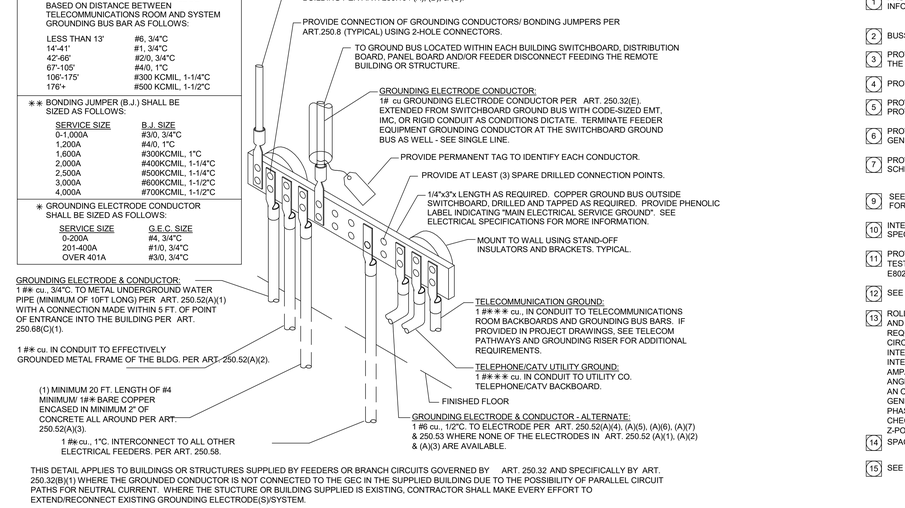

FEEDER TO REMOTE BUILDING / STRUCTURE GROUNDING DETAIL

SCALE: NTS

3

GENERAL SINGLE LINE DIAGRAM NOTES:

1. ALL SWITCHGEAR SHALL BE SQUARE D OR EQUAL BY CUTLER-HAMMER, RSE-SIERRA, G.E., SIEMENS, OR Z-POWER AND DISTRIBUTION.
2. ALL ITEMS DEPICTED ON THE SINGLE LINE DRAWINGS SHALL BE ASSUMED AS NEW U.O.N.
3. ALL OVERCURRENT DEVICES IN AN INDIVIDUAL PIECE OF EQUIPMENT SHALL HAVE AN AIC RATING EQUAL TO THE OVERALL RATING OF THE EQUIPMENT-SERIES RATING OF DEVICES WITHIN A PIECE OF EQUIPMENT IS NOT ALLOWED. SEE SPECIFICATIONS FOR MORE INFORMATION.
4. SEE POWER SYSTEMS STUDY SPECIFICATION FOR ADDITIONAL REQUIREMENTS. ALL REQUIRED POWER SYSTEMS STUDIES MUST BE COMPLETED AND SUBMITTED WITH ELECTRICAL POWER DISTRIBUTION EQUIPMENT SUBMITTAL. FAILURE TO DO SO WILL PREVENT THE ENGINEER FROM EFFECTIVELY EVALUATING THE SUBMITTAL AND SHALL RESULT IN REJECTION OF THE ELECTRICAL POWER DISTRIBUTION EQUIPMENT SUBMITTAL AS INCOMPLETE.
5. ALL TERMINATIONS AND ENCLOSURES SHALL BE RATED FOR USE WITH 75 DEGREE CELSIUS CONDUCTORS.
6. ALL SERVICE ENTRANCE EQUIPMENT RATED AT 400A OR GREATER SHALL BE PROVIDED WITH A BACKFEED-RATED, SOLID STATE MAIN OVERCURRENT DEVICE AND BUSSING RATED AT 100% OPERATION (1000A/sq.in. FOR CU, 750A/sq.in. FOR AL), NO HEAT RISE RATED BUSSING ALLOWED. NON-SERVICE ENTRANCE SWITCHBOARDS AND DISTRIBUTION BOARDS LARGER THAN 600A SHALL BE PROVIDED WITH BUSSING RATED FOR 100% OPERATION - SEE SPECIFICATION FOR CIRCUIT BREAKER REQUIREMENTS. ALL NON-SERVICE ENTRANCE SWITCHBOARDS AND DISTRIBUTION BOARD MAIN OVERCURRENT DEVICES SHALL BE BACKFEED-RATED. BACKFEED RATINGS SHALL COMPLY WITH CEC 690.10 (E) AND 705.12(D)(4). SEE SPECIFICATIONS FOR ADDITIONAL REQUIREMENTS REGARDING CIRCUIT BREAKERS.
7. PROVIDE CIRCUIT BREAKER ARC ENERGY REDUCTION MAINTENANCE SWITCHING PER CEC WHERE 240.87(B)(3) FOR ANY CIRCUIT BREAKER, 1200A FRAME AND LARGER. SEE SPECIFICATIONS FOR ADDITIONAL REQUIREMENTS.
8. ALL SWITCHBOARDS AND DISTRIBUTION BOARDS SHALL HAVE:
   a. TIN-PLATED ALUMINUM BUSSING WITH RECTANGULAR CROSS SECTION. HORIZONTAL AND VERTICAL BUSSING SHALL BE FULL LENGTH AND SHALL HAVE PROVISIONS FOR FUTURE EXTENSIONS. ALL BUSSING SHALL HAVE MINIMUM WITHSTAND RATING EQUAL TO THE AVAILABLE FAULT CURRENT INDICATED. ALL VERTICAL AND HORIZONTAL BUSSING SHALL BE RATED AT FULL CAPACITY IN ALL SWITCHBOARD AND DISTRIBUTION BOARD SECTIONS. PROVIDE 100% NEUTRAL BUSSING MINIMUM UNLESS OTHERWISE NOTED. PROVIDE FULL LENGTH GROUND BUS AND, WHERE INDICATED ON PLANS, ISOLATED GROUND BUSSING. PROVIDE REAR WIRE WAY IN ALL SWITCHBOARD SECTIONS.
   b. LUGS SUITABLE FOR USE WITH COPPER OR ALUMINUM CONDUCTORS LISTED FOR USE WITH 75 DEGREE CELSIUS AMPACITY CONDUCTORS.
   c. PERMANENT PLACARD(S) MARKED PER THE SPECIFICATIONS AND PER CEC SECTIONS 225.37, 230.2(E), 690.56, 692.56, 700.7, 701.7, 702.7, AND 705.10 DENOTING THE PRESENCE OF ADDITIONAL SERVICES, PHOTOVOLTAIC SYSTEMS, FUEL CELLS, EMERGENCY OR STAND-BY POWER SOURCES AS APPLICABLE.
9. CONTRACTOR SHALL SUBMIT SWITCHBOARD SHOP DRAWINGS TO THE SERVING UTILITY FOR APPROVAL PRIOR TO FABRICATION. CONTRACTOR SHALL SECURE CONFIRMATION THAT THE PROPOSED SWITCHBOARD COMPLIES WITH ELECTRIC UTILITY COMPANY REGULATIONS.
10. CONTRACTOR SHALL SUBMIT SHOP DRAWINGS PER THE SPECIFICATIONS FOR SWITCHBOARDS, DISTRIBUTION BOARDS, TRANSFORMERS, PANEL BOARDS, AND ALL OTHER DEVICES SHOWN ON THE SINGLE LINE, PRIOR TO FABRICATION.
11. ALLOWABLE DIMENSIONS IN MAIN ELECTRICAL ROOM ARE A CRITICAL COORDINATION ITEM. CONTRACTOR SHALL PROVIDE 1/4"= 1'-0" SCALE DRAWINGS WITH SWITCHGEAR SUBMITTALS SHOWING THAT ALL PROPOSED EQUIPMENT WILL FIT IN THE SPACE PROVIDED. SUBMITTALS WITHOUT THIS DRAWING SHALL BE REJECTED AS INCOMPLETE.
12. UNLESS SPECIFICALLY SHOWN AS (E), (R), (ER), (D), EXISTING OR NON-BOLD, ALL ELECTRICAL DEVICES SHOWN ARE NEW.
13. WHERE REQUIRED BY THE LOCAL AUTHORITY HAVING JURISDICTION OR WHERE A NEW GROUND FAULT PROTECTIVE DEVICE IS BEING INSTALLED, A GROUND FAULT SYSTEM TEST SHALL BE CONDUCTED BY AN INDEPENDENT TESTING AGENCY PER CEC 230.95(C). THE GROUND FAULT SYSTEM TEST SHALL BE PERFORMED IN THE PRESENCE OF THE LOCAL AUTHORITY HAVING JURISDICTION. VERIFICATION OF DEVICE SETTINGS PER THE POWER SYSTEMS STUDY SPECIFICATION SHALL BE PERFORMED BY THE SAME INDEPENDENT TESTING AGENCY. THE GROUND FAULT TEST RESULTS SHALL BE DELIVERED TO THE ENGINEER OF RECORD DURING THE CONSTRUCTION PHASE OF THE PROJECT, ALL NEW GROUND FAULT RELAYS SHALL BE SET AT THE LOWEST AVAILABLE TIME DELAY AND PICK-UP SETTINGS.

SPECIFIC SINGLE LINE NOTES:

1. PROVIDE GROUNDING PER CEC 250.30. SEE TRANSFORMER SCHEDULE, SHEET E402, FOR GEC/BJ SIZING INFORMATION. SEE SEPARATELY DERIVED SYSTEM GROUNDING DETAIL FOR MORE INFORMATION.
2. BUSSING SHALL BE PROVIDED FOR FUTURE BUS EXTENSION TO FUTURE DISTRIBUTION SYSTEM.
3. PROVIDE (1) 4" C.O. FOR EVERY 800 AMPS OF SERVICE SIZE (MINIMUM OF ONE) STUBBED OUTSIDE THE BUILDING TO THE NEAREST PLANTER AREA. CAP AND MARK.
4. PROVIDE (4) 1" C.O. STUBBED OUTSIDE THE BUILDING TO THE NEAREST PLANTER AREA. CAP AND MARK.
5. PROVIDE CIRCUIT BREAKER TESTED/LISTED FOR USE WITH ATS BY ATS MANUFACTURER. BREAKER SHALL FULLY PROTECT THE ATS FOR THE AVAILABLE FAULT CURRENT.
6. PROVIDE GROUNDING PER CEC 250.30. SEE GENERATOR SCHEDULE FOR GEC/BJ SIZING INFORMATION. SEE GENERATOR SYSTEM GROUNDING DETAIL FOR MORE INFORMATION.
7. PROVIDE GROUNDING PER CEC 250.30 WHEN UPS IS CONSIDERED A SEPARATELY DERIVED SYSTEM. SEE UPS SCHEDULE FOR GEC/BJ SIZING INFORMATION WHEN APPLICABLE.
9. SEE MAIN SYSTEM GROUNDING DETAIL OR FEEDER TO REMOTE BUILDING / STRUCTURE GROUNDING DETAIL FOR MORE INFORMATION.
10. INTEGRAL SURGE PROTECTIVE DEVICE (SPD) SYSTEM AND FEEDER. SEE SPD SYSTEM SCHEDULE AND SPECIFICATIONS FOR MORE INFORMATION.
11. PROVIDE BOLTED PRESSURE SWITCH WITH VISIBLE LOCKABLE SWITCH. PROVIDE FUSES/CIRCUIT BREAKERS TESTED/LISTED FOR BACK FEED OPERATION PER CEC 690.64 AND 705.12. SEE PV SINGLE LINE DIAGRAM, SHEET E802 FOR ADDITIONAL INFORMATION.
12. SEE PV SYSTEM DRAWINGS / SPECIFICATIONS FOR MORE INFORMATION.
13. ROLL-UP GENERATOR DOCKING STATION (GDS) CONSISTING OF A POWDER-COATED ALUMINUM OR STEEL CABINET AND LOCKABLE ACCESS DOOR. STATION SHALL BE UL1008 LISTED, SEISMICALLY CERTIFIED, AND MEET THE REQUIREMENTS OF NEC, OR CEC WHERE ADOPTED, 700.3 (F). GDS INPUT CIRCUIT BREAKER & GENERATOR OUTPUT CIRCUIT BREAKER KIRK-KEY MECHANISMS SHALL BE KEYED ALIKE AND SHALL PREVENT SIMULTANEOUS INTERCONNECTION OF TEMPORARY GENERATOR AND PERMANENT GENERATOR. PROVIDE AND CONNECT BOTH AN INTERNAL 125V, 20A, GFCI BATTERY CHARGER RECEPTACLE AND BLOCK HEATER RECEPTACLE (TYPE AND AMPACITY PER PLAN). TEMPORARY GENERATOR CAMLOK CONNECTIONS SHALL HAVE FLIP COVERS AND BE ANGLED DOWNWARDS TO MAINTAIN NEMA 3R LISTING WHILE TEMPORARY GENERATOR IS CONNECTED. PROVIDE AN ON-BOARD PHASE ROTATION MONITOR AND TWO-WIRE START CONTACTS WIRED TO THE PERMANENT GENERATOR START WIRES TO ALLOW AUTO-START OF THE TEMPORARY GENERATOR. FACILITY POWER SYSTEM PHASE ROTATION, SYSTEM BONDING/GROUNDING REQUIREMENTS, AND PORTABLE GENERATOR INSTALLATION CHECKLIST SHALL BE MARKED/PLACARDED WITHIN THE GDS (TRYSTAR #SBDS-06-5-P-L-F-C,D,F,G,J,K OR EQUAL BY Z-POWER)
14. SPACE FOR FOUR (4) 225A-3P CIRCUIT BREAKERS.
15. SEE TRANSFORMER SCHEDULE, SHEET E402, FOR ADDITIONAL INFORMATION.

IDENTIFICATION STAMP
DIV. OF THE STATE ARCHITECT
APP: 02-118630 INC:
REVIEWED FOR
SS ☐ FLS ☐ ACS ☑
DATE: 04/13/2021

OFFICE OF THE STATE FIRE MARSHAL
APPROVED FIRE AND PANIC ONLY
Approval of this plan does not authorize or approve any omission or deviation from applicable regulations. Final approval is subject to field inspection. One set of approved plans shall be available on the project site at all times.
PERMIT NO: 26-N-2332-CP
REVIEWED BY: LEO CATAYLO, OSFM
DATE: 4 / /2021

GENERAL SERVICES
Department of General Services
State of California
Real Estate Services Division
Project Management & Development Branch
707 Third Street, Suite 4-105
West Sacramento, California 95605

NICHOLS MELBURG & ROSSETTO
ARCHITECTS + ENGINEERS
300 Knollcrest Drive
Redding, CA. 96002
(530) 222-3300 (530) 222-3538 FAX
http://www.nmrdesign.com

Copyright © 2019
All ideas, designs, arrangements and plans indicated or represented by this drawing are owned by, and the property of, NICHOLS, MELBURG and ROSSETTO and were created, evolved and developed for use on, and in connection with, the specified project. None of such ideas, designs, arrangements or plans shall be used by, or disclosed to, any person, firm or corporation for any purpose whatsoever without the written permission of NICHOLS, MELBURG and ROSSETTO.

LICENSE STAMPS

REGISTERED PROFESSIONAL ENGINEER RAYMOND W. SWEETSER No. E15610 12/31/2021 ELECTRICAL STATE OF CALIFORNIA
Date Signed: 3/25/2021

CONSULTANT
tklsc COLLABORATIVE
11870 Pierce Street, Suite 160
Riverside, California 92505
951.299.4160 www.tk1sc.com
Project Leader - Jerry Leonhardt
Electrical Lead - Reid Cordry
tk1sc Job #:2019-0228A

DRAWING STATUS
CONSTRUCTION DOCUMENTS

ISSUE

No.	Date	Description
1	10/20/2020	INITIAL PLAN REVIEW
2	01/22/2021	AGENCY RESUBMITTAL
3	03/22/2021	AGENCY RESUBMITTAL

If drawing is not 30" x 42" it is a reduced print

PROJECT
RESIDENTIAL CENTER, UKIAH: REPLACEMENT OF EXISTING RESIDENTIAL CENTER
440 EAST HILL ROAD
WILLITS, CALIFORNIA 95490
MENDOCINO COUNTY
CALIFORNIA CONSERVATION CORP

Supervisor	Designed	Drawn
		Author

DSA Application No.
02-118630

SHEET TITLE
SINGLE LINE DIAGRAM

DGS Project Number: 0000000000001826
NMR Project Number: 18-6456

Reference North: NORTH
Sheet Scale: 12" = 1'-0"
Sheet Number: E401

ISSUE DATE
July 9, 2021

Plot Date: 3/24/2021 9:15:26 AM
File Name: BIM 360://CCC Willits Residential Center/E_CCC Willits_COMMON_2019-0228A.rvt

POWER SYSTEMS STUDY SPECIFICATIONS:

THE CONTRACTOR SHALL PROVIDE, WITH THE ASSISTANCE OF THE SWITCHGEAR MANUFACTURER, POWER SYSTEMS STUDIES CONSISTING OF A SHORT CIRCUIT STUDY, A COORDINATION STUDY, AND AN ARC FLASH STUDY - ALL PER LATEST PUBLISHED EDITIONS OF THE FOLLOWING STANDARDS: ANSI C37, IEEE 141, IEEE 242, IEEE 399 - BROWN BOOK, NFPA 70E AND IEEE STD 1584/1584a. ADDITIONALLY:

a. CONTRACTOR SHALL PERFORM STUDY USING SKM "SYSTEMS ANALYSIS POWER TOOLS FOR WINDOWS" COMPUTER SOFTWARE PROGRAM - LATEST AVAILABLE VERSION OR EQUAL BY ETAP.

b. CONTRACTOR SHALL FURNISH/OBTAIN ALL DATA REQUIRED FOR POWER SYSTEMS STUDIES. DATA COLLECTION EFFORT SHALL BE PERFORMED IN AN EXPEDITIOUS MANNER AND AS SOON AS POSSIBLE AFTER CONTRACT AWARD TO ENSURE STUDY COMPLETION FOR SUBMISSION AS PART OF THE ELECTRICAL DISTRIBUTION EQUIPMENT SHOP DRAWINGS AND SUBMITTALS. DATA COLLECTION EFFORTS MAY INCLUDE, BUT ARE NOT LIMITED TO, CALCULATED UTILITY COMPANY FAULT VALUES, SERVICE TRANSFORMER PRIMARY PROTECTIVE DEVICE AND APPLIED VOLTAGE, ELECTRICAL CHARACTERISTICS AND FAULT CONTRIBUTION FROM EXISTING MOTORS/GENERATORS, EXISTING CONDUCTOR QUANTITIES, SIZE AND LENGTHS, EXISTING/ NEW OVERCURRENT PROTECTIVE DEVICE SPECIFICATIONS AND PART NUMBERS, TRANSFER SWITCH CHARACTERISTICS AND SHORT CIRCUIT CURRENT RATINGS IN ADDITION TO ANY OTHER DATA REQUIRED TO PERFORM COMPREHENSIVE POWER SYSTEM STUDIES. RANGES OF FAULT CURRENT VALUES OR GENERIC FAULT CURRENT VALUES PROVIDED BY THE UTILITY COMPANY ARE UNACCEPTABLE AS ARE ANY FAULT CURRENT VALUES SHOWN ON THE SINGLE LINE DIAGRAM OR FEEDER SCHEDULE.

DATA GATHERING SHALL BE CONDUCTED IN A SAFE MANNER WITH 1) EQUIPMENT COMPLETELY DE-ENGERIZED IN COORDINATION WITH THE OWNER DURING A SCHEDULED POWER SHUTDOWN OR 2) UTILIZING A LICENSED ELECTRICIAN WEARING APPROPRIATE PERSONNEL PROTECTIVE EQUIPMENT PER NFPA 70E STANDARDS.

CONTRACTOR IS SOLELY RESPONSIBLE FOR OBTAINING UTILITY DATA FROM THE UTILITY COMPANY - INCLUDE ALL COSTS IN BASE BID FOR ANY UTILITY COMPANY FEES FOR PROVIDING NECESSARY DATA. WHERE THE PROJECT IS LOCATED ON A CAMPUS WITH AN OWNER-FURNISHED ELECTRICAL DISTRIBUTION SYSTEM, CONTRACTOR SHALL BE RESPONSIBLE TO OBTAIN SUFFICIENT ELECTRICAL SYSTEM DATA TO DEMONSTRATE COORDINATION OF THE PROJECT'S ELECTRICAL SYSTEM WITH CAMPUS DISTRIBUTION SYSTEM. THIS DATA MAY BE AVAILABLE IN THE FORM OF AN OWNER-PROVIDED CAMPUS POWER SYSTEM STUDY. WHERE SUCH STUDIES ARE NOT AVAILABLE, THE CONTRACTOR SHALL INCLUDE ALL COSTS IN BASE BID TO PERFORM NECESSARY FIELD INVESTIGATION OF CAMPUS DISTRIBUTION SYSTEM INCLUDING CAMPUS SERVICE ENTRANCE AND SERVING UTILITY DATA AS REQUIRED TO DEMONSTRATE COORDINATION OF THE PROJECT'S ELECTRICAL SYSTEM WITH CAMPUS DISTRIBUTION SYSTEM. INCLUDE ALL COSTS FOR RECOMMENDING ADJUSTMENTS TO EXISTING CAMPUS DISTRIBUTION SYSTEM SETTINGS DISCOVERED TO BE INCORRECT. OWNER SHALL BE RESPONSIBLE TO UNDERTAKE ANY PHYSICAL ADJUSTMENTS TO EXISTING MEDIUM OR HIGH VOLTAGE DISTRIBUTION EQUIPMENT WITH THE EXCEPTION OF FUSES, RELAYS OR OTHER CIRCUIT PROTECTIVE DEVICES LOCATED IN EXISTING DISTRIBUTION EQUIPMENT THAT ARE DEDICATED TO SERVE ONLY THIS PROJECT'S ELECTRICAL SYSTEM.

CONTRACTOR IS SOLELY RESPONSIBLE FOR OBTAINING EQUIPMENT SCCR RATING FROM ALL OTHER PROJECT TRADES AND FOR ANY OWNER-FURNISHED OR TENANT-FURNISHED EQUIPMENT CONNECTED TO THE ELECTRICAL SYSTEM IN ORDER TO VALIDATE AVAILABLE FAULT CURRENT AT THE EQUIPMENT CONNECTIONS IS LESS THAN THE RESPECTIVE EQUIPMENT SCCR.

c. THE SHORT CIRCUIT STUDY SHALL INCLUDE CALCULATED SHORT-CIRCUIT MOMENTARY AND INTERRUPTING DUTIES FOR 3-PHASE BOLTED FAULTS AND LINE-TO-GROUND FAULTS THROUGHOUT THE SINGLE LINE TO INCLUDE UTILITY SERVICE SUPPLY, GENERATORS AND TRANSFER SWITCHES, SUBSTATIONS, SWITCHGEAR, PANEL BOARDS ETC. STUDY SHALL EVALUATE ALL ELECTRICAL DISTRIBUTION EQUIPMENT AND PROTECTIVE DEVICES AGAINST SHORT CIRCUIT CURRENT RATINGS. THIS STUDY EFFORT SHALL EXTEND TO SCCR RATINGS OF EQUIPMENT, EQUIPMENT CONTROL PANELS, VARIABLE FREQUENCY DRIVES ETC PROVIDED BY OTHER TRADES THAT ARE CONNECTED TO THE ELECTRICAL SYSTEM. NOTE ANY EXISTING CIRCUIT PROTECTIVE DEVICE(S)/ELECTRICAL DISTRIBUTION THAT IS INADEQUATELY RATED TO WITHSTAND CALCULATED FAULT VALUES OR WHERE EQUIPMENT SCCR IS EXCEEDED. WHERE THE UTILITY COMPANY PROVIDES MULTIPLE FAULT CURRENT VALUES REFLECTING INITIAL TRANSFORMER CAPACITY AND WORST CASE TRANSFORMER CAPACITY, THE CONTRACTOR SHALL PROVIDE SHORT CIRCUIT ANALYSIS PRIMARILY BASED ON WORST CASE TRANSFORMER CAPACITY. ALL SERVICE EQUIPMENT SHALL BE LABELED WITH THE MAXIMUM AVAILABLE FAULT CURRENT AND FAULT CURRENT CALCULATION DATE PER NEC (OR CEC WHERE ADOPTED) 110.24. SEE LABELING SPECIFICATION FOR ADDITIONAL REQUIREMENTS.

d. THE COORDINATION STUDY SHALL INCLUDE TIME-CURRENT CURVES (TCC) FOR OVER CURRENT PROTECTIVE DEVICES (OCPDs) ALONG WITH TRANSFORMER FULL-LOAD CURRENT, INRUSH CURRENT, AND THROUGH-FAULT PROTECTION CURVES, CONDUCTOR DAMAGE CURVES, GROUND FAULT PROTECTIVE DEVICE CURVES, MOTOR STARTING CURVE(S)/DAMAGE POINT(S), GENERATOR SHORT-CIRCUIT CURVE(S) /DAMAGE POINT(S) ETC. - CLEARLY IDENTIFIED AND PLOTTED ON LOG-LOG SCALE GRAPH(S). TCC GRAPH(S) SHALL INCLUDE A ONE-LINE DIAGRAM IDENTIFYING THE SPECIFIC PORTION COVERED BY THE GRAPH. DEMONSTRATE THAT ADEQUATE CLEARING TIME/SELECTIVE OPERATION EXISTS BETWEEN PROTECTIVE DEVICES WHILE PROVIDING PROPER SYSTEM PROTECTION & COORDINATION. STUDY SHALL INCLUDE ALL MAIN AND FEEDER OCPDs INCLUDING SECONDARY SIDE OF EACH TRANSFORMER DOWN TO BREAKERS IN PANEL BOARDS AND INDIVIDUAL BREAKERS IN DISTRIBUTION BOARDS. IN ALL CASES, SOLID STATE AND/OR ADJUSTABLE OCPDs SHALL BE ANALYZED WITH UPSTREAM AND DOWNSTREAM OCPDs AS REQUIRED TO ESTABLISH PROPER COORDINATION SETTINGS. SPECIAL EMPHASIS SHALL BE PLACED ON ANALYZING PORTIONS OF THE ELECTRICAL SYSTEM REQUIRING SELECTIVE COORDINATION WHICH INCLUDE, BUT ARE NOT LIMITED TO, NEC (OR CEC WHERE ADOPTED) ARTICLES 517, 620, 700, 701 & 708 ; ALONG WITH ANY ARTICLE 702 OPTIONAL STANDBY SYSTEMS SERVING SERVER ROOMS/DATA CENTERS OR OTHER AREAS REQUIRING HIGH AVAILABILITY/PROPER COORDINATION SUCH AS MANUFACTURING, CLEAN ROOM OR LAB FACILITIES. CONTRACTOR SHALL BE RESPONSIBLE TO RECOMMEND SETTINGS OF ALL DEVICES, TO INCLUDE GROUND FAULT SETTINGS, TO ACHIEVE SYSTEM COORDINATION. THE CONTRACTOR SHALL FIELD ADJUST NEW AND EXISTING DEVICES ACCORDINGLY UTILIZING A QUALIFIED MANUFACTURER'S REPRESENTATIVE OR A THIRD-PARTY ELECTRICAL TESTING AGENCY.

e. THE ARC FLASH ANALYSIS SHALL BE BASED ON THE INCIDENT ENERGY ANALYSIS METHOD (NFPA 70E 130.5). THE ARC FLASH ANALYSIS SHALL DETERMINE THE FLASH BOUNDARY, THE WORKING DISTANCE, THE INCIDENT ENERGY AND MINIMUM ARC RATING OF CLOTHING(CAL/CM²) AT LOCATIONS IN THE ELECTRICAL SYSTEM WHERE WORK CAN OR MIGHT BE PERFORMED ON ENERGIZED COMPONENTS WHERE MULTIPLE SYSTEM CONFIGURATION SCENARIOS ARE POSSIBLE, THE CONFIGURATION WITH GREATEST INCIDENT ENERGY MUST BE SHOWN. DECREMENT FAULT CONTRIBUTIONS FROM MOTOR(S) AND GENERATOR(S) BASED ON INDUSTRY STANDARDS. THE CONTRACTOR SHALL MAKE RECOMMENDATIONS WITH REGARD TO SYSTEM ADJUSTMENTS OR OTHER MITIGATION MEASURES TO OPTIMIZE THE RESULTS OF THE STUDY AS IT RELATES TO SAFE AND RELIABLE ELECTRICAL SYSTEM OPERATION (E.G. OVERCURRENT DEVICE SETTINGS, WORKING DISTANCES, CURRENT LIMITING DEVICES). THIS INCLUDES MITIGATION, WHERE POSSIBLE, OF INCIDENT ENERGY LEVELS THAT EXCEED 40 CAL/CM². PERFORM ITERATIVE CALCULATIONS TO DEMONSTRATE EFFECTS OF OPENING PROTECTIVE DEVICES UTILIZING A VARIETY OF DIFFERENT SETTINGS TO BEST MITIGATE ARC FLASH ENERGY WHILE MAINTAINING AN ACCEPTABLE LEVEL OF SYSTEM COORDINATION. WHERE SUCH RECOMMENDATIONS COMPROMISE SELECTIVE COORDINATION SETTINGS, SO STATE IN THE ANALYSIS.

INCLUDE INCIDENT ENERGY/FLASH PROTECTION BOUNDARY CALCULATIONS FOR BOTH LINE/LOAD SIDE OF ALL SEPARATELY ENCLOSED MAIN CIRCUIT BREAKERS. ALL CALCULATIONS SHALL BE BASED ON ACTUAL OVERCURRENT DEVICE CLEARING TIMES.

f. BASED ON THE RESULTS OF THE ARC FLASH ANALYSIS, THE CONTRACTOR SHALL PRODUCE AND INSTALL A WARNING LABEL (ORANGE <40 CAL/CM2) OR DANGER LABEL (RED > 40 CAL/CM2) FOR EACH PIECE OF EQUIPMENT PER NEC (OR CEC WHERE ADOPTED) 110.16 AND IN ACCORDANCE WITH ANSI Z535.4-2007 OR LATEST PUBLISHED EDITION. THE LABEL MUST BE READABLE IN BOTH INDOOR AND OUTDOOR ENVIRONMENTS FOR AT LEAST 3 YEARS AND CONTAIN THE FOLLOWING INFORMATION: NOMINAL SYSTEM VOLTAGE, ARC HAZARD BOUNDARY (INCHES), WORKING DISTANCE (INCHES), AVAILABLE ARC FLASH INCIDENT ENERGY AT THE WORKING DISTANCE (CAL/CM²), MINIMUM ARC RATING OF CLOTHING, EQUIPMENT/BUS NAME, DATE PREPARED, SUPPLIER'S NAME AND ADDRESS. PROVIDE LABEL AS MANUFACTURED BY BRADY OR EQUAL. PRIOR TO PLACING ARC FLASH LABELS, CONTRACTOR SHALL SET ALL PROTECTIVE DEVICE SETTINGS PER THE APPROVED COORDINATION STUDY.

g. DURING THE CONSTRUCTION PHASE OF THE PROJECT, ALL GROUND FAULT RELAYS SHALL BE SET AT THE LOWEST AVAILABLE TIME DELAY AND PICK-UP SETTINGS.

h. POWER SYSTEMS STUDIES SHALL BE SUBMITTED AS PART OF THE OVERALL SWITCHGEAR SUBMITTAL. THE RESULTS OF THE POWER SYSTEMS STUDY SHALL BE PRESENTED IN A COMPREHENSIVE REPORT THAT INCLUDES:

- REPORT SUMMARY WITH ANALYSIS METHODOLOGY, FINDINGS AND RECOMMENDATIONS
- SUMMARY OF INPUT DATA FOR UTILITY SOURCE, EQUIPMENT AND CABLES
- AVAILABLE FAULT CURRENT AT EACH EQUIPMENT LOCATION WITH COMPARISON TO EQUIPMENT RATING
- OVERCURRENT DEVICE SETTINGS (E.G. PICK-UP, TIME DELAY, CURVE), “AS FOUND” AND “AS RECOMMENDED”
- OVERCURRENT DEVICE COORDINATION CURVES INCLUDING RELATED SECTION OF THE SINGLE-LINE DIAGRAM
- COMPLETE SYSTEM SINGLE-LINE DIAGRAM FOR THE SYSTEM ANALYZED
- INCIDENT ENERGY LEVEL (CAL/CM²) FOR EACH EQUIPMENT LOCATION, RECOMMENDED PPE AND SAMPLE ARC FLASH WARNING LABELS
- A DVD OR CD CONTAINING ELECTRONIC PROJECT FILES USED TO DEVELOP THE STUDY TO INCLUDE SKM OR ETAP PROJECT AND REFERENCE LIBRARY FILES. ALL FILES SHALL BE AVAILABLE FOR REVIEW AND/OR FUTURE MODIFICATION WITHOUT LIMITATION. LOCKING OR SECURING FILES BY OTHER MEANS IS NOT ACCEPTABLE. FAILURE TO SUBMIT COMPLETE STUDIES AND FULLY ACCESSIBLE FILES SHALL RESULT IN THE REJECTION OF THE ENTIRE SWITCHGEAR SUBMITTAL.

i. AS A PART OF A CLOSEOUT SUBMITTAL TO BE SUBMITTED TO THE ENGINEER PRIOR TO FINAL PROJECT CONSTRUCTION OBSERVATIONS, CONTRACTOR SHALL PROVIDE PHOTOS OF ALL ADJUSTABLE CIRCUIT BREAKERS DEPICTING THEIR FINAL SETTINGS BASED ON THE POWER SYSTEMS STUDY. SUBMITTAL SHALL BE ORGANIZED WITH OCPD IDENTIFICATION, OCPD PHOTO IMAGE AND RESPECTIVE POWER SYSTEM STUDY OCPD SETTING REQUIREMENTS TO ALLOW EFFICIENT CONFIRMATION OF RECORD SETTINGS. PLEASE NOTE THAT IMAGES MAY NEED TO BE TAKEN PRIOR TO INSTALLATION OF EQUIPMENT COVERS/EQUIPMENT ENERGIZATION SINCE OCPD SETTINGS MAY BE OBSTRUCTED BY EQUIPMENT COVERS.

j. THE STUDY SHALL INCLUDE ALL PORTIONS OF ELECTRICAL SINGLE LINE DIAGRAM TO INCLUDE UPSTREAM OR DOWNSTREAM ELEMENTS THAT MAY NOT BE SHOWN INCLUDING, BUT NOT LIMITED TO, UTILITY SOURCE CONTRIBUTION, RELEVANT PORTIONS OF THE EXISTING ELECTRICAL DISTRIBUTION SYSTEM WITHIN A BUILDING AND/OR CAMPUS ELECTRICAL DISTRIBUTION SYSTEMS AS DESCRIBED ABOVE.

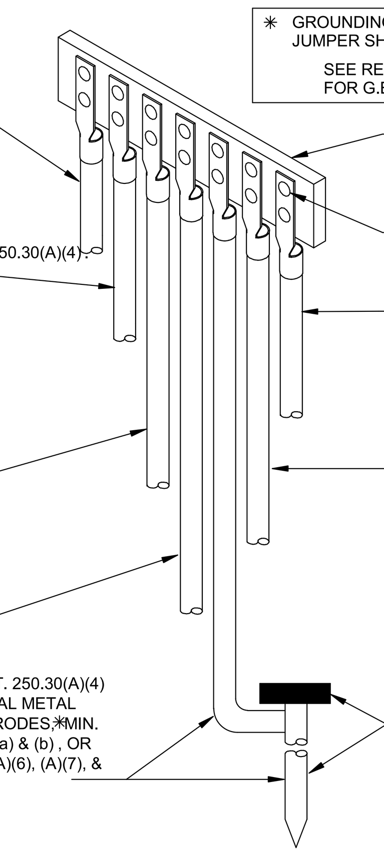

SYSTEM BONDING JUMPER:
COPPER CONDUCTOR/BUSSING SIZED PER TABLE 250.66 (OR LARGER PER ART. 250.28(D)(1)) TO THE METAL FRAME OF THE SEPARATELY DERIVED SYSTEM.

GROUNDING ELECTRODE & CONDUCTOR:
IF AVAILABLE ON THE PREMISES AT EACH BUILDING AND/OR STRUCTURE SERVED, PROVIDE 1 # cu✳IN CONDUIT TO AN EFFECTIVELY GROUNDED STRUCTURAL STEEL OR EFFECTIVELY GROUNDED UNDERGROUND METAL WATER PIPE (MIN.10FT LONG) WITHIN 5 FT. FROM POINT OF ENTRANCE TO THE BUILDING AND/OR STRUCTURE TO THE SEPARATELY DERIVED SYSTEM PER ART. 250.30(A)(4).

GROUNDING ELECTRODE & CONDUCTOR - ALTERNATE:
WHERE GROUNDED STRUCTURAL MEMBER OR EFFECTIVELY GROUNDED WATER PIPE IS UNAVAILABLE ON THE PREMISES, PROVIDE 1 # cu✳IN CONDUIT TO A CONCRETE-ENCASED ELECTRODE WITH MIN OF 20 FT IN LENGTH OF MIN. #4 BARE ENCASED IN MIN. 2" OF CONCRETE ALL AROUND, OR A GROUND RING IN DIRECT CONTACT WITH EARTH AT A DEPTH NOT LESS THAN 2-1/2 FT. WITH 20 FT. LENGTH MIN. OF #2 BARE COPPER, WHICHEVER IS AVAILABLE, PER ART. 250.52(A) (3) & (4).

BONDING JUMPER(S):
PROVIDE BONDING WITH 1 # cu✳IN CONDUIT TO NEAREST METAL WATER PIPE (HOT, COLD, SPRINKLER, SEWER, BUILDING MOUNTED - INTERIOR OR EXTERIOR, ETC), UNINTENTIONALLY UNGROUNDED BUILDING STEEL, GAS PIPE, HVAC DUCTS IN THE BUILDING PER ART. 250.104 (A), (B), & (C)

GROUNDING ELECTRODE & CONDUCTOR - ALTERNATE #2:
WHERE NO EFFECTIVE GROUNDING ELECTRODE IS AVAILABLE PER ART. 250.30(A)(4) OR ART. 250.52(A)(3) OR (4) , PROVIDE 1 # cu. IN CONDUIT TO OTHER LOCAL METAL UNDERGROUND PIPING SYSTEMS AND TANKS, OR ROD AND PIPE ELECTRODES,✳MIN. OF 10 FT. IN LENGTH, WHICH SHALL BE INSTALLED PER ART. 250.52(A)(5)(a) & (b) , OR PLATE ELECTRODES, WHICHEVER IS AVAILABLE, PER ART 250.52 (A)(5), (A)(6), (A)(7), & (A)(8).

✳ GROUNDING ELECTRODE CONDUCTOR/BONDING JUMPER SHALL BE SIZED AS FOLLOWS:
SEE RESPECTIVE SYSTEM/DEVICE SCHEDULE FOR G.E.C. SIZE.

NEUTRAL BUS WITHIN EQUIPMENT.

PROVIDE CONNECTION OF GROUNDING CONDUCTORS/BONDING JUMPERS PER ART.250.8.

SUPPLY SIDE BONDING JUMPER (SSBJ):
SSBJ CONDUCTOR SIZED PER ART. 250-66 (OR LARGER PER ART. 250.30A(2)) TO BE INCLUDED IN FEEDER TO NEXT DEVICE - SEE FEEDER SCHEDULE. SSBJ SHALL BE CONNECTED TO THE GROUNDING SYSTEM AT THE FIRST DISCONNECTING MEANS.

WHEN SEPARATELY DERIVED SYSTEM IS A UPS, CPC, PDU OR TRANSFORMER LOCATED IN INFORMATION TECHNOLOGY ROOM, AS DEFINED BY NEC (OR CEC WHERE ADOPTED) ART. 645, SERVER ROOM, DATA CENTER, OR COMPUTER ROOM, PROVIDE 1#2 INSULATED GREEN CONDUCTOR, 3/4"C. AND MECHANICALLY CONNECT TO MAIN TELECOMMUNICATIONS GROUNDING BUS AND, WHEN LOCATED ON A TILE ACCESS FLOOR, TO UNDER FLOOR SIGNAL REFERENCE OR GROUNDING GRID AS REQUIRED.

10' COPPER GROUND ELECTRODE(S) WITH EXOTHERMIC CONNECTION(S) TO GROUND CONDUCTOR. PROVIDE FIBER GLASS INSPECTION WELL(S). QUANTITY AS REQUIRED TO ACHIEVE CODE-REQUIRED RESISTANCE VALUES.

SEPARATELY DERIVED SYSTEM (SDS) GROUNDING DETAIL — 1
SCALE: NTS
(OCPD NOT A PART OF SDS)

TRANSFORMER SCHEDULE

NAME	KVA	WINDING MATERIAL	INPUT V	INPUT P	INPUT W	OUTPUT V	OUTPUT P	OUTPUT W	MIN %Z	A.I.C. VALUE	K VAL.	GEC/BJ SIZE	REDUCED SOUND LEVEL	NEMA/ MNTG.	DIMENSIONS H	DIMENSIONS W	DIMENSIONS D	WGT.	REMARKS
TA	112.5	ALUMINUM	480	3	3	120/208	3	4	4	7,806	N/A	3/4"C, #1/0	N/A	1/F	51	35	32	976	-
TE	75	ALUMINUM	480	3	3	120/208	3	4	2.6	8,010	N/A	1/2"C, #2	N/A	1/F	43	35	27	710	-
TH	500	ALUMINUM	480	3	3	120/208	3	4	4.8	28,910	N/A	1"C, 300KCMIL	N/A	3/F	71	51	44	3100	-
TMP	112.5	ALUMINUM	480	3	3	120/208	3	4	4	7,806	N/A	3/4"C, #1/0	N/A	1/F	51	35	32	976	-
TR	150	ALUMINUM	480	3	3	120/208	3	4	4	10,408	N/A	3/4"C, #2/0	N/A	1/F	51	38	33	1239	-
TW	112.5	ALUMINUM	480	3	3	120/208	3	4	4	7,806	N/A	3/4"C, #1/0	N/A	1/F	51	35	32	976	-
TMPK	30	ALUMINUM	480	3	3	120/208	3	4	2.3	3,619	N/A	1/2"C, #8	N/A	1/F	37	27	24	409	-
TSA	75	ALUMINUM	480	3	3	120/208	3	4	2.6	8,010	N/A	1/2"C, #2	N/A	1/F	43	35	27	710	-
TWD	45	ALUMINUM	480	3	3	120/208	3	4	2.6	4,804	N/A	1/2"C, #6	N/A	1/F	37	27	24	490	-

TRANSFORMER SCHEMATIC:

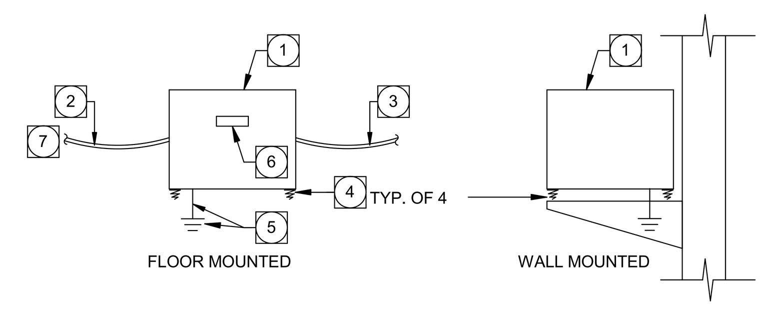

TRANSFORMER SYSTEM PLAN NOTES:

1. TRANSFORMER PER SPECIFICATIONS AND TRANSFORMER SCHEDULE.
2. PRIMARY FEEDER - SEE SINGLE LINE DIAGRAM.
3. SECONDARY FEEDER(S) - SEE SINGLE LINE DIAGRAM.
4. VIBRATION DAMPERS - SEE SPECIFICATIONS.
5. SEE SEPARATELY DERIVED SYSTEM GROUNDING DETAIL.
6. TRANSFORMER IDENTIFICATION NAMEPLATE IDENTIFYING REMOTE DISCONNECTING MEANS LOCATION, AS REQUIRED, PER NEC, OR CEC WHERE ADOPTED, ARTICLE 450.14. SEE LABELING SECTION OF THE GENERAL ELECTRICAL SPECIFICATIONS FOR ADDITIONAL REQUIREMENTS.
7. PROVIDE A TRANSFORMER DISCONNECTING MEANS CAPABLE OF BEING LOCKED-OFF, AS REQUIRED, PER NEC, OR CEC WHERE ADOPTED, ARTICLE 450.14.

TRANSFORMER INSTALLATION REQUIREMENTS:

1. THE CONTRACTOR SHALL BE RESPONSIBLE FOR THE FURNISHING OF ALL MATERIAL, LABOR, EQUIPMENT, AND SERVICES, IN CONNECTION WITH THE INSTALLATION OF A COMPLETE AND FULLY FUNCTIONING AND CODE COMPLIANT INSTALLATION.
2. IT IS THE INTENT OF THE CONTRACT DOCUMENTS, WHICH ARE PRESENTED IN A DIAGRAMMATIC FORMAT, TO PROVIDE CONTRACTOR INFORMATION THAT SUPPLEMENTS AND ENHANCES THE GENERALLY ACCEPTED CONSTRUCTION MEANS, METHODS, TECHNIQUES, SEQUENCES AND PROCEDURES EMPLOYED IN CONNECTION WITH INSTALLATION OF THIS TYPE OF PRODUCT / SYSTEM.
3. THE CONTRACTOR SHALL ALSO INCORPORATE THE REQUIREMENTS OF THE MANUFACTURER'S INSTALLATION INSTRUCTIONS / WARRANTY REQUIREMENTS AS PART OF THE REQUIREMENTS OF THE CONSTRUCTION DOCUMENTS. IN THE EVENT OF A CONFLICT BETWEEN THE CONTRACT DOCUMENT REQUIREMENTS AND THE MANUFACTURERS INSTALLATION REQUIREMENTS, THE MORE STRINGENT REQUIREMENTS SHALL APPLY - UNLESS THE MORE STRINGENT REQUIREMENT VOIDS APPLICABLE WARRANTIES OR VIOLATES THE REQUIREMENTS OF THE LOCAL AUTHORITY HAVING JURISDICTION. ANY SUCH CONFLICT SHALL IMMEDIATELY BE BROUGHT TO THE ATTENTION OF THE ENGINEER IN WRITING THROUGH THE FORMAL RFI PROCESS.
4. REFER TO THE ASSOCIATED SCHEDULES, SCHEMATICS, DRAWINGS, AND SPECIFICATIONS FOR DETAILED INFORMATION / REQUIREMENTS ON THIS PRODUCT / SYSTEM.

TRANSFORMER SYSTEM SPECIFICATIONS:

1. TRANSFORMERS SHALL BE DRY TYPE, INTEGRAL, SELF-COOLED, ENCLOSED DISTRIBUTION, TWO-WINDING TYPE PER UL 506. TRANSFORMERS SHALL BE PROVIDED WITH WINDINGS AS SPECIFIED IN THE TRANSFORMER SCHEDULE. EACH TRANSFORMER MUST UNDERGO RESISTANCE, IMPEDANCE AND RATIO TESTING, THE RESULTS OF WHICH SHALL BE PROVIDED AS PART OF THE TRANSFORMER SUBMITTAL PACKAGE.
2. TRANSFORMERS SHALL BE EQUIPPED WITH TWO (2) 2 1/2% FCAN AND TWO (2) 2 1/2% FCBN TAPS. TAP LEADS SHALL BE TERMINATED ON AN INTERNAL BLOCK WITH LUGS FOR CONNECTION OF INCOMING CONDUCTORS. THE TERMINAL COMPARTMENT SHALL BE LOCATED BELOW THE LEVEL OF THE TRANSFORMER WINDINGS. PROVIDE ACCESS TO TERMINALS FROM THE FRONT FOR WALL AND FLOOR MOUNTED TRANSFORMERS, AND FROM THE FRONT AND BOTTOM FOR SUSPENDED TRANSFORMERS.
3. VENTILATION OPENINGS SHALL BE LOCATED TO PERMIT PLACING THE TRANSFORMER IN A CORNER WITHIN 6" OF THE TWO ADJACENT WALLS. ENCLOSURE SHALL BE CONSTRUCTED OF HEAVY GAUGE STEEL, COATED INSIDE AND OUT WITH ZINC CHROMATE OR IRON OXIDE RUST INHIBITING PRIMER. ENCLOSURE SHALL THEN BE FINISHED IN GRAY ENAMEL. EACH TRANSFORMER SHALL BE FURNISHED WITH A MANUFACTURER'S NAMEPLATE LOCATED ON THE FRONT OF THE UNIT. THE NAMEPLATE SHALL BE ANODIZED ALUMINUM STENCILED WITH VOLTAGE, KVA RATING, K-RATING, PHASE, TAP ADJUSTMENTS AND WIRING DIAGRAMS.
4. SEISMICALLY-RATED VIBRATION ISOLATORS (KORFUND COMPANY, MASON INDUSTRIES, CALDYN OR EQUAL) SHALL BE LOCATED AT EACH CORNER OF THE TRANSFORMER. ELASTOMER PADS MAY BE USED FOR ISOLATION OF TRANSFORMERS 1) WEIGHTING LESS THAN 1000 LBS AND 2) THAT ARE NOT SPECIFIED WITH REDUCED SOUND LEVELS PER THE TRANSFORMER SCHEDULE. ELASTOMER PADS SHALL BE EQUIPPED WITH SHOULDERED BUSHINGS PREVENTING METAL-TO-METAL CONTACT BETWEEN ANCHOR BOLT AND THE TRANSFORMER. NEOPRENE ISOLATORS SHALL BE USED FOR TRANSFORMERS WEIGHING 1000 LBS OR MORE OR ANY TRANSFORMER SPECIFIED WITH REDUCED SOUND LEVEL OUTPUT PER THE TRANSFORMER SCHEDULE. NEOPRENE ISOLATORS SHALL HAVE CAPTIVE STEEL OR DUCTILE IRON HOUSINGS AS REQUIRED BY SEISMIC CONDITIONS AND WEIGHT OF THE TRANSFORMER. NEOPRENE ELEMENTS SHALL BE ARRANGED IN OPPOSITION TO PROVIDE POSITIVE MECHANICAL RESTRAINT IN ALL DIRECTIONS. NEOPRENE ISOLATORS SHALL BE SELECTED TO PROVIDE NOMINAL 0.2" OF NOMINAL STATIC DEFLECTION IN COMPRESSION (0.15" MINIMUM DEFLECTION) AND LESS THAN 70 DUROMETER (BASED ON SHORE SCALE A AND IN COMPLIANCE WITH ASTM D2240 TYPE A) TO LIMIT SOUND/VIBRATION TRANSMISSION TO THE STRUCTURE - SUBMIT ISOLATOR DEFLECTION CALCULATIONS FOR SELECTED ISOLATORS WITH TRANSFORMER SUBMITTAL. TRANSFORMER SHALL BE BOLTED, VIA VIBRATION ISOLATORS, TO THE FLOOR, HOUSEKEEPING PAD, CEILING OR WALL MOUNTING BRACKETS AT ALL FOUR CORNERS. WHEN SHOWN AS WALL-MOUNTED, PROVIDE EITHER MANUFACTURER'S STANDARD TRANSFORMER WALL MOUNTING BRACKETS OR FIELD-FABRICATED MOUNTING SYSTEMS. TRANSFORMER INSTALLATIONS SHALL, AT MINIMUM, MEET THE SEISMIC BRACING AND ANCHORAGE REQUIREMENTS MANDATED BY GOVERNING BUILDING CODES. SEE GENERAL ELECTRICAL SPECIFICATIONS FOR ADDITIONAL REQUIREMENTS.
5. STANDARD TRANSFORMERS SHALL HAVE CLASS 220 INSULATION, HAVING A 150 DEGREE CELSIUS TEMPERATURE RISE ABOVE 30 DEGREE CELSIUS AVERAGE AND 40 DEGREE CELSIUS MAXIMUM, WHEN OPERATING AT FULL LOAD - WITHOUT A LOSS OF LIFE. STANDARD TRANSFORMERS SHALL COMPLY WITH NEMA ENERGY EFFICIENCY STANDARD "TP-1". WHERE TRANSFORMER STOCKS BECOME DEPELETED, INCLUDE ALL COSTS IN BASE BID TO PROVIDE 2016 DEPARTMENT OF ENERGY (DOE) TRANSFORMER EFFICIENCY STANDARD-COMPLIANT TRANSFORMERS.
6. K RATED TRANSFORMERS SHALL HAVE CLASS 220 INSULATION, HAVING A 115 DEGREE CELSIUS TEMPERATURE RISE ABOVE 30 DEGREE CELSIUS AVERAGE AND 40 DEGREE CELSIUS MAXIMUM, WHEN OPERATING AT FULL LOAD - WITHOUT A LOSS OF LIFE. K RATED TRANSFORMERS SHALL COMPLY WITH NEMA ENERGY EFFICIENCY STANDARD "TP-1". WHERE TRANSFORMER STOCKS BECOME DEPLETED, INCLUDE ALL COSTS IN BASE BID TO PROVIDE 2016 DEPARTMENT OF ENERGY (DOE) TRANSFORMER EFFICIENCY STANDARD-COMPLIANT TRANSFORMERS.
7. USE FLEXIBLE CONDUIT FOR PRIMARY AND SECONDARY CONNECTIONS WITH A SEPARATE EQUIPMENT GROUND CONDUCTOR.
8. THE "MIN. %Z" COLUMN INDICATES THE MINIMUM ALLOWED TRANSFORMER IMPEDANCE.
9. THE "A.I.C. VALUE" COLUMN INDICATES THE INTERRUPTING CURRENT AT THE SECONDARY TERMINALS BASED UPON AN INTERRUPTING CURRENT OF INFINITY AT THE PRIMARY TERMINALS.
10. THE "K VALUE" COLUMN INDICATES THE MINIMUM UL APPROVED K RATING. K RATED TRANSFORMERS SHALL BE PROVIDED WITH DOUBLE SIZE NEUTRAL TERMINALS, ADDITIONAL COIL CAPACITY, AN ELECTROSTATIC SHIELD, AND SHALL BE U.L. LISTED FOR NON-LINEAR LOADS.
11. THE "GEC/BJ SIZE" COLUMN INDICATES THE MINIMUM CONDUIT AND COPPER GROUNDING ELECTRODE CONDUCTOR AND BONDING JUMPER SIZES. THE G.E.C. AND CONDUIT SIZE SHALL BE INCREASED PER NEC OR CEC WHERE ADOPTED, TABLE 250.66 BY THE CONTRACTOR BASED ON EQUIVALENT SIZE OF THE TRANSFORMER SECONDARY CONDUCTORS.
12. WHEN THE TRANSFORMER SCHEDULE INDICATES A "REDUCED SOUND LEVEL" TRANSFORMER, PROVIDE A TRANSFORMER THAT PRODUCES 3 DECIBELS LESS SOUND AS COMPARED TO NEMA STANDARD SOUND LEVELS. WHEN REDUCED SOUND LEVEL TRANSFORMER IS NOT INDICATED, PROVIDE A TRANSFORMER THAT MEETS NEMA STANDARD SOUND LEVELS, WHICH ARE:

    10-50 KVA - 45 DECIBELS.
    51-150 KVA - 50 DECIBELS.
    151-300 KVA - 55 DECIBELS.
    301-500 KVA - 60 DECIBELS.

13. THE "NEMA/MNTG" COLUMN INDICATES THE NEMA RATED ENCLOSURE TYPE AS WELL AS THE MOUNTING METHOD:

    "1" - INDICATES AN INDOOR TYPE.
    "3" - INDICATES AN NEMA 3R, OUTDOOR TYPE WITH VENTILATED OPENINGS AND RODENT/TAMPER SCREENS.
    "F" - INDICATES FLOOR MOUNTED.
    "W" - INDICATES WALL MOUNTED.
    "RF" - INDICATES RAISED FLOOR MOUNTING WHICH REQUIRES A CUSTOM MOUNTING FRAME SUCH THAT THE RAISED FLOOR DOES NOT SUPPORT THE TRANSFORMER(S). SUGGESTED SOURCE: MASON WEST INC. (www.masonwest.com)

14. THE "DIMENSIONS" COLUMN INDICATES "H" HEIGHT, "W" WIDTH, AND "D" DEPTH. ALL DIMENSIONS AND WEIGHTS ARE BASED UPON SQUARE D PRODUCTS. CONTRACTOR SHALL BE RESPONSIBLE FOR ALL COST IMPACTS OF LARGER DIMENSIONS FROM AN ALTERNATE MANUFACTURER.
15. TRANSFORMERS SHALL BE GROUNDED TO A CODE APPROVED GROUND SOURCE PER NEC, OR CEC WHERE ADOPTED, ARTICLE 250.30.
16. IF THE SINGLE LINE DIAGRAM INDICATES TWO (2) SECONDARY FEEDERS THE TRANSFORMER SHALL BE PROVIDED WITH A DOUBLE LUG KIT.
17. SHOP DRAWINGS SHALL BE SUBMITTED PER THE ELECTRICAL SUBMITTAL REQUIREMENTS SHOWING CONFORMANCE TO THESE SPECIFICATIONS.
18. TRANSFORMERS SHALL BE MANUFACTURED BY GE, CUTLER-HAMMER, SIEMENS, SQUARE D, MGM, HAMMOND POWER SOLUTIONS, OR OLSEN.

IDENTIFICATION STAMP
DIV. OF THE STATE ARCHITECT
APP: 02-118630 INC:
REVIEWED FOR
SS ☐ FLS ☐ ACS ☑
DATE: 04/13/2021

OFFICE OF THE STATE FIRE MARSHAL
APPROVED FIRE AND PANIC ONLY
Approval of this plan does not authorize or approve any omission or deviation from applicable regulations. Final approval is subject to field inspection. One set of approved plans shall be available on the project site at all times.
PERMIT NO.: 20-N-2332-CP
REVIEWED BY: LITO CATAYLO, OSFM
DATE: 4/ / /2021

GENERAL SERVICES
Department of General Services
State of California
Real Estate Services Division
Project Management & Development Branch
707 Third Street, Suite 4-105
West Sacramento, California 95605

NICHOLS MELBURG & ROSSETTO
ARCHITECTS + ENGINEERS
300 Knollcrest Drive
Redding, CA. 96002
(530) 222-3300 (530) 222-3538 FAX
http://www.nmrdesign.com

Copyright © 2019
All ideas, designs, arrangements and plans indicated or represented by this drawing are owned by, and the property of, NICHOLS, MELBURG and ROSSETTO and were created, evolved and developed for use on, and in conjunction with, the specified project. None of such ideas, designs, arrangements or plans shall be used by, or disclosed to any person, firm or corporation for any purpose whatsoever without the written permission of NICHOLS, MELBURG and ROSSETTO.

LICENSE STAMPS
REGISTERED PROFESSIONAL ENGINEER
RAYMOND W. SWARTZ
No. E15610
Exp. 12/31/2021
ELECTRICAL
STATE OF CALIFORNIA
Date Signed:
3/25/2021

CONSULTANT
tk1sc
COLLABORATIVE
11870 Pierce Street, Suite 160
Riverside, California 92505
951.299.4160 www.tk1sc.com
Project Leader - Jerry Leonhardt
Electrical Lead - Reid Cordry
tk1sc Job #:2019-0228A

DRAWING STATUS
CONSTRUCTION DOCUMENTS

ISSUE

No.	Date	Description
1	10/20/2020	INITIAL PLAN REVIEW
2	01/22/2021	AGENCY RESUBMITTAL
3	03/22/2021	AGENCY RESUBMITTAL

If drawing is not 30" x 42" it is a reduced print

PROJECT
RESIDENTIAL CENTER, UKIAH: REPLACEMENT OF EXISTING RESIDENTIAL CENTER
440 EAST HILL ROAD
WILLITS, CALIFORNIA 95490
MENDOCINO COUNTY
CALIFORNIA CONSERVATION CORP

Supervisor	Designed	Drawn
		Author

DSA Application No.
02-118630

SHEET TITLE
POWER SYSTEM STUDY AND TRANSFORMER SCHEDULE

DGS Project Number: 000000000001826
NMR Project Number: 18-6456

Reference North: NORTH
Sheet Scale
Sheet Number
E402

ISSUE DATE
July 9, 2021

Plot Date: 3/24/2021 9:15:27 AM
File Name: BIM 360://CCC Willits Residential Center/E_CCC Willits_COMMON_2019-0228A.rvt

GENERATOR SCHEDULE

GENERATOR	KW	VOLTAGE	PHASE	WIRE	FUEL TYPE	REMOTE ANNUNC. PANEL	NETWORK/ COMMUNICATIONS (USEABLE)	ENCLOSURE SILENCER	ENCLOSURE RADIATOR DISCHARGE	ENCLOSURE SOUND ATTEN.	ENCLOSURE COLOR	LOAD BANK	BEST BATTERY SYSTEM	GENERATOR SYSTEM DIMENSIONS	GEN. SYS. WEIGHT	DESIGNATED SEISMIC SYS.	GEC/BJ SIZE	REMARKS
"GMP"	400	277/480	3	4	PROPANE	YES	COPPER/ SNMP	INTERNAL	HORIZONTAL	STAGE 1	STD	UNIT MOUNTED	NO	26'-7"L X 8'-3"W X 9'-5"H	14,505 LB	NO	1"C. 1#2	- -

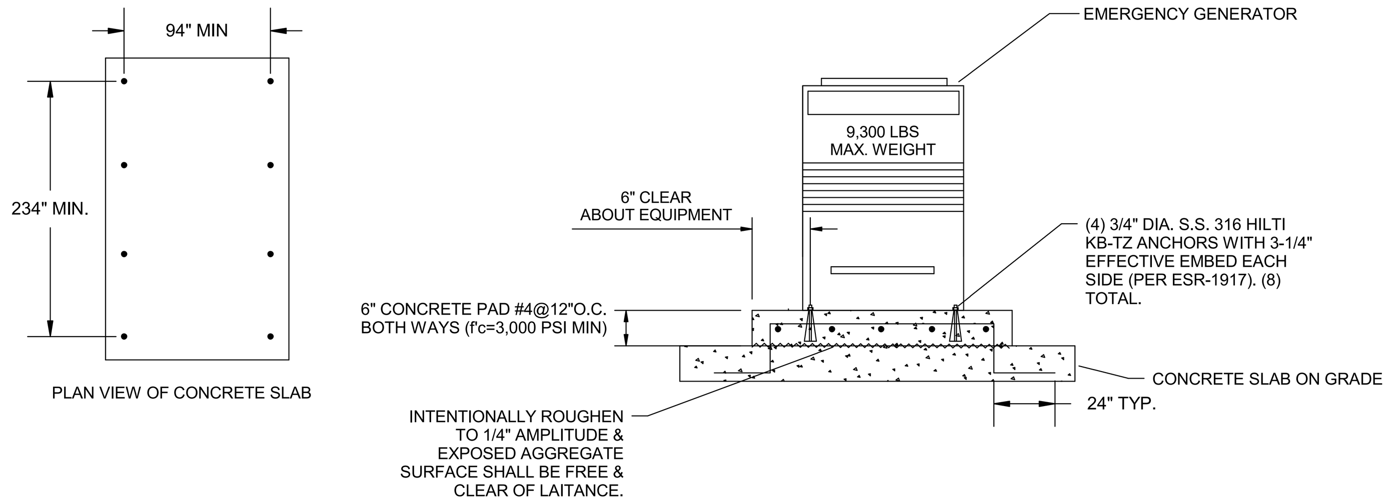

GENERATOR ANCHORAGE DETAIL (3)

SCALE: N.T.S.

SYSTEM BONDING JUMPER:
COPPER CONDUCTOR/BUSSING SIZED PER TABLE 250.66 (OR LARGER PER ART. 250.28(D)(1)) TO THE METAL FRAME OF THE SEPARATELY DERIVED GENERATOR SYSTEM.

GROUNDING ELECTRODE & CONDUCTOR:
IF AVAILABLE ON THE PREMISES AT EACH BUILDING AND/OR STRUCTURE SERVED, PROVIDE 1 #✳cu. IN CONDUIT TO AN EFFECTIVELY GROUNDED STRUCTURAL STEEL OR EFFECTIVELY GROUNDED UNDERGROUND METAL WATER PIPE (MIN.10FT LONG) WITHIN 5 FT. FROM POINT OF ENTRANCE TO THE BUILDING AND/OR STRUCTURE TO THE SEPARATELY DERIVED SYSTEM PER ART. 250.30(A)(4).

GROUNDING ELECTRODE & CONDUCTOR - ALTERNATE:
WHEN GENERATOR IS LOCATED WITHIN A BUILDING OR IN AN ARCHITECTURAL ENCLOSURE ATTACHED TO A BUILDINGWHERE GROUNDED STRUCTURAL MEMBER OR EFFECTIVELY GROUNDED WATER PIPE IS UNAVAILABLE ON THE PREMISES, PROVIDE 1 #✳cu. IN CONDUIT TO A CONCRETE-ENCASED ELECTRODE WITH MIN OF 20 FT IN LENGTH OF MIN. #4 BARE ENCASED IN MIN. 2" OF CONCRETE ALL AROUND, OR A GROUND RING IN DIRECT CONTACT WITH EARTH AT A DEPTH NOT LESS THAN 2-1/2 FT. WITH 20 FT. LENGTH MIN. OF #2 BARE COPPER, WHICHEVER IS AVAILABLE, PER ART. 250.52(A) (3) & (4).

BONDING JUMPER(S):
WHEN GENERATOR IS LOCATED WITHIN A BUILDING OR IN AN ARCHITECTURAL ENCLOSURE ATTACHED TO A BUILDINGPROVIDE BONDING WITH 1 #✳cu. IN CONDUIT TO NEAREST METAL WATER PIPE (HOT, COLD, SPRINKLER, SEWER, BUILDING MOUNTED - INTERIOR OR EXTERIOR, ETC), UNINTENTIONALLY UNGROUNDED BUILDING STEEL, GAS PIPE, HVAC DUCTS IN THE BUILDING PER ART. 250.104 (A), (B), & (C)

GROUNDING ELECTRODE & CONDUCTOR - ALTERNATE #2:
WHEN GENERATOR IS LOCATED WITHIN A BUILDING OR IN AN ARCHITECTURAL ENCLOSURE ATTACHED TO A BUILDING & WHERE NO EFFECTIVE GROUNDING ELECTRODE IS AVAILABLE PER ART. 250.30(A)(4) OR ART. 250.52(A)(3) OR (4), PROVIDE 1 #✳cu. IN CONDUIT TO OTHER LOCAL METAL UNDERGROUND PIPING SYSTEMS AND TANKS, OR ROD AND PIPE ELECTRODES, MIN. OF 10 FT. IN LENGTH, WHICH SHALL BE INSTALLED PER ART. 250.52(A)(5)(a) & (b), OR PLATE ELECTRODES, WHICHEVER IS AVAILABLE, PER ART 250.52 (A)(5), (A)(6), (A)(7), & (A)(8).

✳ GROUNDING ELECTRODE CONDUCTOR/BONDING JUMPER SHALL BE SIZED AS FOLLOWS:
SEE RESPECTIVE SYSTEM/DEVICE SCHEDULE FOR G.E.C. SIZE.

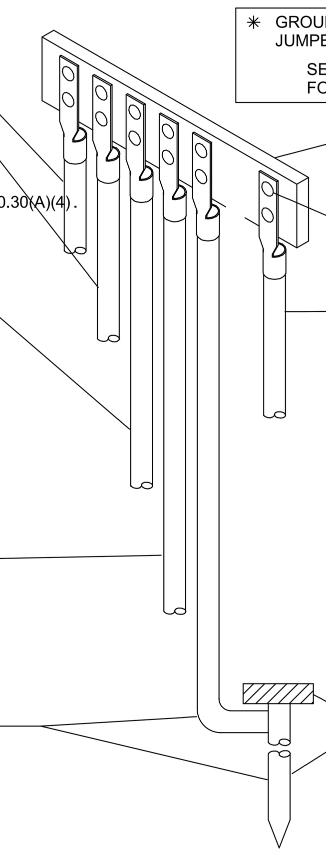

NEUTRAL BUS WITHIN GENERATOR.

PROVIDE CONNECTION OF GROUNDING CONDUCTORS/BONDING JUMPERS PER ART.250.8.

EQUIPMENT GROUNDING CONDUCTOR (EGC):
EGC, SIZED PER TABLE 250.122, INCLUDED IN FEEDER TO NEXT DEVICE. SEE FEEDER SCHEDULE.

10' COPPER GROUND ELECTRODE(S) WITH EXOTHERMIC CONNECTION(S) TO GROUND CONDUCTOR. PROVIDE FIBER GLASS INSPECTION WELL(S). QUANTITY AS REQUIRED TO ACHIEVE CODE-REQUIRED RESISTANCE VALUES.

GENERATOR SEPARATELY DERIVED SYSTEM (SDS) GROUNDING DETAIL (2)
(OCPD PART OF SDS)

SCALE: NTS

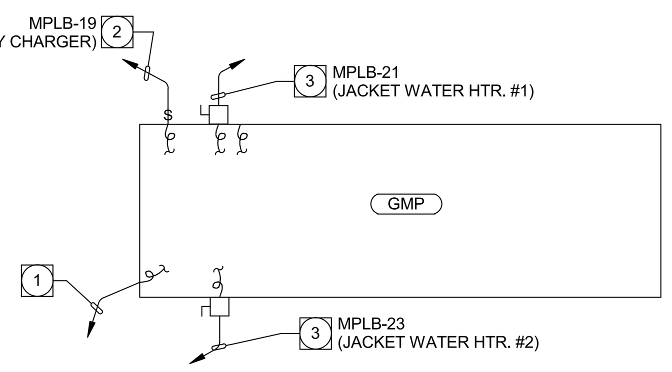

GENERATOR PLAN (1)

SCALE: N.T.S.

GENERATOR SPECIFIC PLAN NOTES:

1. MINIMUM (1) 1"C. FROM GENSET TO GAP "GAA" LOCATED IN MULTI-PURPOSE BUILDING OFFICE M124, WITH REQUIRED CONDUCTORS, (1) 1"C. FROM GENERATOR TO EACH ATS WITH REQUIRED CONDUCTORS, (1) 1"C.O. SPARE TO MAIN ELECTRICAL ROOM (BMS OR GENSET COMM NETWORK) AND (1) 1"C W/FIRE ALARM CONDUCTORS TO FACP.
2. PROVIDE 3/4"C., 2#10 & 1#10 GND. CONNECT AS REQUIRED TO BATTERY CHARGER.
3. PROVIDE 3/4"C., 2#10 & 1#10 GND. CONNECT AS REQUIRED TO 1.5KW JACKET WATER HEATER VIA 30A, 2P NEMA 3R DISCONNECT LOCATED WITHIN GENERATOR HOUSING.

KOHLER. Model: **400REZXB**

208-600 V Gas

ISO 9001 KOHLER NATIONALLY REGISTERED

EPA-Certified for Stationary and Mobile Emergency and Non-Emergency Applications

Ratings Range

		60 Hz
Standby:	kW	295-400
	kVA	369-500
Prime:	kW	360-365
	kVA	450-456

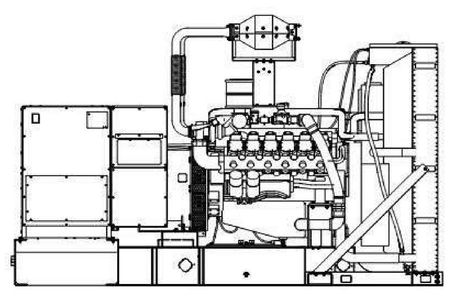

Standard Features

- Kohler Co. provides one-source responsibility for the generating system and accessories.
- The generator set and its components are prototype-tested, factory-built, and production-tested.
- The 60 Hz generator set offers a UL 2200 listing.
- The generator set accepts rated load in one step.
- The 60 Hz generator set meets NFPA 110, Level 1, when equipped with the necessary accessories and installed per NFPA standards.
- A one-year limited warranty covers all generator set systems and components. Two- and five-year extended limited warranties are also available.
- Alternator features:
  - The pilot-excited, permanent magnet (PM) alternator provides superior short-circuit capability.
  - The brushless, rotating-field alternator has broadrange reconnectability.
- Dual fuel model features:
  - Natural gas is the primary fuel. Automatically transfers back to primary fuel when LPG fuel becomes low or generator stops and restarts.
  - The patent pending reset box on the generator provides the ability to manually transfer back to natural gas.
  - The natural gas rating is available when running on natural gas.
  - APM603 controller provides load shed for automatic derate to LPG ratings to prevent an overload condition.

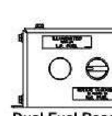

Dual Fuel Reset Box

Generator Set Ratings

Alternator	Voltage	Ph	Hz	Rich-Burn Natural Gas 130°C Rise Standby Rating kW/kVA	Amps	Rich-Burn Natural Gas 105°C Rise Prime Rating kW/kVA	Amps	Rich-Burn LP Gas (Vapor) 130°C Rise Standby Rating kW/kVA	Amps
5M4024	120/208	3	60	400/500	1388	360/450	1249	295/369	1024
	127/220	3	60	400/500	1312	360/450	1181	295/369	968
	139/240	3	60	400/500	1203	360/450	1083	295/369	887
	220/380	3	60	400/500	760	360/450	684	295/369	560
	240/416	3	60	400/500	694	360/450	625	295/369	512
	277/480	3	60	400/500	601	360/450	541	295/369	444
5M4027	120/208	3	60	400/500	1388	360/450	1249	295/369	1024
	127/220	3	60	400/500	1312	360/450	1181	295/369	968
	120/240	3	60	400/500	1203	360/450	1083	295/369	887
	139/240	3	60	400/500	1203	360/450	1083	295/369	887
	220/380	3	60	400/500	760	360/450	684	295/369	560
	240/416	3	60	400/500	694	360/450	625	295/369	512
	277/480	3	60	400/500	601	360/450	541	295/369	444
4M4266	347/600	3	60	400/500	481	365/456	439	300/375	361

RATINGS: All three-phase units are rated at 0.8 power factor. *Standby Ratings:* The standby rating is applicable to varying loads for the duration of a power outage. There is no overload capability for this rating. *Prime Power Ratings:* At varying load, the number of generator set operating hours is unlimited. A 10% overload capacity is available for one hour in twelve. Ratings are in accordance with ISO-8528-1 and ISO-3046-1. For limited running time and continuous ratings, consult the factory. Obtain technical information bulletin (TIB-101) for ratings guidelines, complete ratings definitions, and site condition derates. The generator set manufacturer reserves the right to change the design or specifications without notice and without any obligation or liability whatsoever.

Alternator Specifications

Specifications	Alternator
Type	4-Pole, Rotating-Field
Exciter type	Brushless, Permanent-Magnet Pilot Exciter
Leads: quantity, type	10/12, Reconnectable
	4, 600 V
Voltage regulator	Solid State, Volts/Hz
Insulation:	NEMA MG1
Material	Class H, Synthetic, Nonhygroscopic
Temperature rise	130°C, 150°C Standby
Bearing: quantity, type	1, Sealed
Coupling	Flexible Disc
Amortisseur windings	Full
Voltage regulation, no-load to full-load	Controller Dependent
Rotor balancing	125%
One-step load acceptance	100% of Rating
Unbalanced load capability	100% of Rated Standby Current
Peak motor starting kVA:	(35% dip for voltages below)
480 V 5M4024 (10 lead)	1350 (60Hz)
480 V 5M4027 (12 lead)	1550 (60Hz)
600 V 4M4266 (4 lead)	1300 (60Hz)

- NEMA MG1, IEEE, and ANSI standards compliance for temperature rise and motor starting.
- Sustained short-circuit current of up to 300% of the rated current for up to 10 seconds.
- Sustained short-circuit current enabling downstream circuit breakers to trip without collapsing the alternator field.
- Self-ventilated and dripproof construction.
- Superior voltage waveform from a two-thirds pitch stator and skewed rotor.
- Brushless alternator with brushless pilot exciter for excellent load response.

Application Data

Engine

Engine Specifications	
Manufacturer	Doosan
Engine model	D219TIC
Engine type	21.9 L, 4-Cycle, Turbocharged, Charge Air-Cooled
Cylinder arrangement	V-12
Displacement, L (cu. in.)	21.9 (1338)
Bore and stroke, mm (in.)	128 x 142 (5.04 x 5.59)
Compression ratio	10.5:1
Piston speed, m/min. (ft./min.)	511 (1677)
Main bearings: quantity, type	14, Precision Half-Shell
Rated rpm	1800
Max. power at rated rpm, kWm (BHP)	451 (605)
Cylinder head material	Cast Iron
Piston: type, material	—
Crankshaft material	Forged Steel
Valve material	—
Governor: type	Electronic
Frequency regulation, no-load to full-load	Isochronous
Frequency regulation, steady state	±0.5%
Frequency	Fixed
Air cleaner type, all models	Dry

Exhaust

Exhaust System	
Exhaust manifold type	Wet
Exhaust flow at rated kW, kg/hr. (cfm)	1787 (2546)
Exhaust temperature at rated kW, dry exhaust, °C (°F)	600 (1112)
Maximum allowable back pressure overall, kPa (in. Hg)	10.2 (3)
Maximum allowable back pressure after catalyst, kPa (in. Hg)	5.1 (1.5)
Engine exhaust outlet size, mm (in.)	Flanged Outlet at Catalyst, see ADV drawing

Engine Electrical

Engine Electrical System	
Battery charging alternator:	
Ground (negative/positive)	Negative
Volts (DC)	24
Ampere rating	45
Starter motor rated voltage (DC)	24
Battery, recommended cold cranking amps (CCA):	
Qty., CCA rating each	Two, 1000
Battery voltage (DC)	12

Fuel

Fuel System - Rich Burn	
Fuel type	Natural Gas, LP Gas, or Dual Fuel
Fuel supply line inlet	3.0 NPTF
Natural gas fuel supply pressure, kPa (in. H_2O)	1.74-2.74 (7.0-11.0)
LPG vapor withdrawal fuel supply pressure, kPa (in. H_2O)	1.24-2.74 (5.0-11.0)
Dual fuel engine, LPG vapor withdrawal fuel supply pressure, kPa (in. H_2O)	1.24 (5.0)

Fuel supply pressure, measured at the generator set fuel inlet downstream of any fuel system equipment accessories.

Fuel Composition Limits *	Nat. Gas	LP Gas
Methane, % by volume	90 min.	—
Ethane, % by volume	4.0 max.	—
Propane, % by volume	1.0 max.	85 min.
Propene, % by volume	0.1 max.	5.0 max.
C_4 and higher, % by volume	0.3 max.	2.5 max.
Sulfur, ppm mass	25 max.	
Lower heating value, MJ/m³ (Btu/ft³), min.	33.2 (890)	84.2 (2260)

* Fuels with other compositions may be acceptable. If your fuel is outside the listed specifications, contact your local distributor for further analysis and advice.

Application Data

Lubrication

Lubricating System	
Type	Full Pressure
Oil pan capacity, L (qt.) §	40 (42.3)
Oil pan capacity with filter, L (qt.) §	47.1 (49.7)
Oil filter: quantity, type §	2, Cartridge
Oil cooler	Water-Cooled

§ Kohler recommends the use of Kohler Genuine oil and filters.

Cooling

Radiator System	
Ambient temperature, °C (°F) *	50 (122)
Engine jacket water capacity, L (gal.)	53 (14)
Radiator system capacity, including engine, L (gal.)	242 (64)
Engine jacket water flow, Lpm (gpm)	660 (174)
Heat rejected to cooling water at rated kW, dry exhaust, kW (Btu/min.)	453 (25760)
Heat rejected to air charge cooler at rated kW, dry exhaust, kW (Btu/min.)	38 (2150)
Water pump type	Centrifugal
Fan diameter, including blades, mm (in.)	1321 (52)
Fan, kWm (HP)	31.3 (42)
Max. restriction of cooling air, intake and discharge side of radiator, kPa (in. H_2O)	0.125 (0.5)

* Weather and sound enclosures with internal silencer reduce ambient temperature capability by 5°C (9°F).

Operation Requirements

Air Requirements	
Radiator-cooled cooling air, m³/min. (scfm)†	821 (29000)
Combustion air, kg/hr. (cfm)	1682 (841)
Heat rejected to ambient air:	
Engine, kW (Btu/min.)	66 (3765)
Alternator, kW (Btu/min.)	23 (1309)

† Air density = 1.20 kg/m³ (0.075 lbm/ft³)

Fuel Consumption‡	
Natural Gas, m³/hr. (cfh) at % load	**Standby Rating**
100%	119.8 (4231)
75%	93.4 (3298)
50%	65.6 (2317)
25%	40.0 (1413)
Natural Gas, m³/hr. (cfh) at % load	**Prime Rating**
100%	109.2 (3856)
75%	85.1 (3005)
50%	60.5 (2137)
25%	37.7 (1331)
LP Gas, m³/hr. (cfh) at % load	**Standby Rating**
100%	39.9 (1409)
75%	34.0 (1201)
50%	22.9 (809)
25%	14.5 (512)

‡ Nominal fuel rating: Natural gas, 37 MJ/m³ (1000 Btu/ft.³)
LP vapor, 93 MJ/m³ (2500 Btu/ft.³)

LP vapor conversion factors:
8.58 ft.³ = 1 lb.
0.535 m³ = 1 kg.
36.39 ft.³ = 1 gal.

Controllers

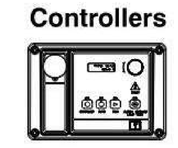

APM402 Controller
Provides advanced control, system monitoring, and system diagnostics for optimum performance and compatibility.
- Digital display and menu control provide easy local data access
- Measurements are selectable in metric or English units
- Remote communication thru a PC via network or serial configuration
- Controller supports Modbus® protocol
- Integrated hybrid voltage regulator with ±0.5% regulation
- Built-in alternator thermal overload protection
- NFPA 110 Level 1 capability

Refer to G6-161 for additional controller features and accessories.

APM603 Controller
Provides advanced control, system monitoring, and system diagnostics for optimum performance and compatibility.
- 7-inch graphic display with touch screen and menu control provides easy local data access
- Measurements are selectable in metric or English units
- Paralleling capability to control up to 8 generators on an isolated bus with first-on logic, synchronizer, kW and kVAR load sharing, and protective relays
  Note: Parallel with other APM603 controllers only
- Generator management to turn paralleled generators off and on as required by load demand
- Load management to connect and disconnect loads as required
- Controller supports Modbus® RTU, Modbus® TCP, SNMP and BACnet®
- Integrated voltage regulator with ±0.25% regulation
- Built-in alternator thermal overload protection
- UL-listed overcurrent protective device
- NFPA 110 Level 1 capability

Refer to G6-162 for additional controller features and accessories.

Decision-Maker® 6000 Paralleling Controller
Provides advanced control, system monitoring, and system diagnostics with remote monitoring capabilities for paralleling multiple generator sets.
- Paralleling capability to control up to 8 generators on an isolated bus with first-on logic, synchronizer, kW and kVAR load sharing, and protective relays
  Note: Parallel with other Decision-Maker® 6000 controllers only
- Digital display and keypad provide easy local data access
- Measurements are selectable in metric or English units
- Remote communication thru a PC via network or modem configuration
- Controller supports Modbus® protocol
- Integrated voltage regulator with ±0.25% regulation
- Built-in alternator thermal overload protection
- NFPA 110 Level 1 capability

Refer to G6-107 for additional controller features and accessories.

Modbus® is a registered trademark of Schneider Electric.

KOHLER.

KOHLER CO., Kohler, Wisconsin 53044 USA
Phone 920-457-4441, Fax 920-459-1646
For the nearest sales and service outlet in the US and Canada, phone 1-800-544-2444
KOHLERPower.com

Standard Features

- Alternator Protection
- Battery Rack and Cables
- Closed Crankcase Ventilation (CCV) with Filters
- Integral Vibration Isolation
- Local Emergency Stop Switch
- Low Coolant Level Shutdown
- Oil Drain Extension
- Operation and Installation Literature
- Three-Way Exhaust Catalyst
- Dual Fuel Reset Box (standard on dual fuel models)

Available Options

Circuit Breakers

Type
- ☐ Magnetic Trip
- ☐ Thermal Magnetic Trip
- ☐ Electronic Trip (LI)
- ☐ Electronic Trip with Short Time (LSI)
- ☐ Electronic Trip with Ground Fault (LSIG)

Rating
- ☐ 80%
- ☐ 100%

Operation
- ☐ Manual
- ☐ Manual with Shunt Trip
- ☐ Electrically Operated (for paralleling)

Circuit Breaker Mounting
- ☐ Generator Mounted
- ☐ Remote Mounted
- ☐ Bus Bar (for remote mounted breakers)

Enclosed Remote Mounted Circuit Breakers
- ☐ NEMA 1 (15-5000 A)
- ☐ NEMA 3R (15-1200 A)

Approvals and Listings
- ☐ CSA Certified
- ☐ IBC Seismic Certification
- ☐ UL 2200 Listing
- ☐ Hurricane Rated Enclosure

Enclosed Unit
- ☐ Sound Enclosure with Internal Silencer (Aluminum)
- ☐ Sound Enclosure with Internal Silencer (Steel)
- ☐ Weather Enclosure with Internal Silencer (Steel)

Open Unit
- ☐ Exhaust Silencer, Critical (Kit includes two silencers)
- ☐ Flexible Exhaust Connector, Stainless Steel (Kit contains two flexible exhaust connectors)

Controller
- ☐ Common Failure Relay
- ☐ Communications Products and PC Software
- ☐ Decision-Maker® Paralleling System (DPS) (Decision-Maker® 6000 controller only)
- ☐ Dry Contact Kit (isolated alarm) (Decision-Maker® 6000 only)
- ☐ Two Input/Five Output Module (APM402 controller only)
- ☐ Four Input/Fifteen Output Module (APM603 controller only)
- ☐ Prime Power Switch (Decision-Maker® 6000 only)
- ☐ Pre-Alarms, NFPA110
- ☐ Remote Emergency Stop
- ☐ Lockable Remote Emergency Stop
- ☐ Remote Serial Annunciator Panel
- ☐ Run Relay (standard with APM603)
- ☐ Manual Key Switch (APM603 controller only)
- ☐ Manual Speed Adjust (APM402 controller only)

Cooling System
- ☐ Block Heater; 6000 W, 208 V, 1 Ph
- ☐ Block Heater; 6000 W, 240 V, (Select 1 Ph or 3 Ph)
- ☐ Block Heater; 6000 W, 480 V, (Select 1 Ph or 3 Ph) Required for Ambient Temperatures Below 10°C (50°F)
- ☐ Radiator Duct Flange

Electrical System
- ☐ Generator Heater
- ☐ Battery
- ☐ Battery Charger
- ☐ Battery Charger Temperature Compensation
- ☐ Battery Heater

Fuel System
- ☐ Dual Fuel, NG/LPG (Automatic Changeover)
- ☐ Flexible Fuel Lines (required when the generator set skid is spring mounted)
- ☐ Gas Filter
- ☐ Secondary Gas Solenoid Valve

Miscellaneous
- ☐ Air Cleaner Restriction Indicator
- ☐ Certified Test Report
- ☐ Engine Fluids Added
- ☐ Rated Power Factor Testing

Literature
- ☐ General Maintenance
- ☐ NFPA 110
- ☐ Overhaul
- ☐ Production

Warranty
- ☐ 2-Year Basic Limited Warranty
- ☐ 2-Year Prime Limited Warranty
- ☐ 5-Year Basic Limited Warranty
- ☐ 5-Year Comprehensive Limited Warranty

Dimensions and Weights

Overall Size, L x W x H, max., mm (in.): 3900 x 1975 x 2464 (153.5 x 77.8 x 97.0)
Weight (radiator model), wet, max., kg (lb.): 4257 (9385)

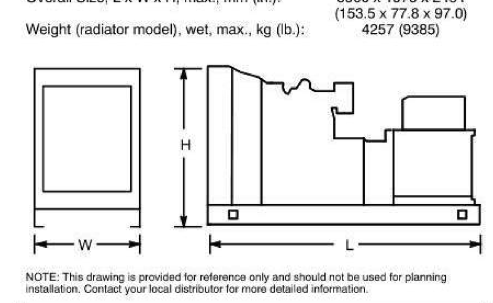

NOTE: This drawing is provided for reference only and should not be used for planning installation. Contact your local distributor for more detailed information.

DISTRIBUTED BY:

© 2011 Kohler Co. All rights reserved.

IDENTIFICATION STAMP
DIV. OF THE STATE ARCHITECT
APP: 02-118630 INC:
REVIEWED FOR
SS ☐ FLS ☐ ACS ☑
DATE: 04/13/2021

OFFICE OF THE STATE FIRE MARSHAL
APPROVED FIRE AND PANIC ONLY
Approval of this plan does not authorize or approve any omission or deviation from applicable regulations. Final approval is subject to field inspection. One set of approved plans shall be available on the project site at all times.
PERMIT NO.: 20-N-2332-CP
REVIEWED BY: LITO CATAYLO, OSFM
DATE: 4/1/2021

DGS GENERAL SERVICES
Department of General Services
State of California
Real Estate Services Division
Project Management & Development Branch
707 Third Street, Suite 4-105
West Sacramento, California 95605

NICHOLS MELBURG & ROSSETTO
ARCHITECTS + ENGINEERS
300 Knollcrest Drive
Redding, CA. 96002
(530) 222-3300 (530) 222-3538 FAX
http://www.nmrdesign.com

Copyright © 2019
All ideas, designs, arrangements and plans indicated or represented by this drawing are owned by, and the property of, NICHOLS, MELBURG and ROSSETTO and were created, evolved and developed for use on, and in conjunction with, the specified project. None of such ideas, designs, arrangements or plans shall be used by, or disclosed to any person, firm or corporation for any purpose whatsoever without the written permission of NICHOLS, MELBURG and ROSSETTO.

LICENSE STAMPS
REGISTERED PROFESSIONAL ENGINEER RAYMOND W. SWARTZ No. E15610 Exp. 12/31/2021 ELECTRICAL STATE OF CALIFORNIA
Date Signed: 3/25/2021

CONSULTANT
tk1sc COLLABORATIVE
11870 Pierce Street, Suite 160
Riverside, California 92505
951.299.4160 www.tk1sc.com
Project Leader - Jerry Leonhardt
Electrical Lead - Reid Cordry
tk1sc Job #:2019-0228A

DRAWING STATUS
CONSTRUCTION DOCUMENTS

ISSUE

No.	Date	Description
1	10/20/2020	INITIAL PLAN REVIEW
2	01/22/2021	AGENCY RESUBMITTAL
3	03/22/2021	AGENCY RESUBMITTAL

If drawing is not 30" x 42" it is a reduced print

PROJECT
RESIDENTIAL CENTER, UKIAH: REPLACEMENT OF EXISTING RESIDENTIAL CENTER
440 EAST HILL ROAD
WILLITS, CALIFORNIA 95490
MENDOCINO COUNTY
CALIFORNIA CONSERVATION CORP

Supervisor	Designed	Drawn
		Author

DSA Application No.
02-118630

SHEET TITLE
GENERATOR SCHEDULE

DGS Project Number	NMR Project Number
000000000001826	18-6456

Reference North: NORTH
Sheet Scale
Sheet Number
E403

ISSUE DATE
July 9, 2021

Plot Date: 1/8/2021 8:26:32 AM
File Name: BIM 360://CCC Willits Residential Center/E_CCC Willits_COMMON_2019-0228A.rvt

GENERATOR SYSTEM SPECIFICATIONS:

1. ALL EQUIPMENT SHALL BE NEW, OF CURRENT DESIGN, AND SHALL BE CONSTRUCTED IN ACCORDANCE WITH THE APPLICABLE REQUIREMENTS OF IEEE, NEMA, UL, ANSI AS WELL AS LOCAL JURISDICTION REQUIREMENTS. ALL EQUIPMENT SHALL BE FACTORY ASSEMBLED AND TESTED. THE FOLLOWING DOCUMENTS SHALL APPLY TO THE MANUFACTURING AND INSTALLATION OF THE GENERATOR SYSTEM:
   - IEEE 587 SURGE TESTING
   - NEC, OR CEC WHERE ADOPTED, SECTION 445
   - NEMA MGI MOTORS AND GENERATORS
   - NFPA 110 EMERGENCY/STANDBY SYSTEMS
   - NFPA 37 INSTALLATION AND USE
   - IFC, OR CFC WHERE ADOPTED, CHAPTER 57
   - UL 142 FUEL TANKS
   - UL 489 CIRCUIT BREAKERS
   - UL 508 INDUSTRIAL CONTROL EQUIPMENT
   - UL 2085 FIRE RATED FUEL TANKS (WHEN REQUIRED BY AHJ)
   - UL 2200 GENERATOR SET
2. ALL PRODUCTS SHALL BE WARRANTED AGAINST DEFECTS IN MATERIAL AND WORKMANSHIP FOR 2 YEARS FROM START UP INCLUDING PARTS, LABOR AND TRAVEL EXPENSES.
3. ENGINE SHALL BE PROVIDED WITH THE FOLLOWING EQUIPMENT:
   - OIL PRESSURE, WATER TEMPERATURE, RPM, HOURS OF OPERATION, ENGINE STARTS COUNTER AND DC VOLTAGE METERS.
   - POSITIVE DISPLACEMENT OIL AND FUEL PUMPS WITH REPLACEABLE SPIN ON CANISTER ELEMENTS.
   - ENGINE-MOUNTED BATTERY(S) CHARGING ALTERNATOR(S), 45-AMPERE MINIMUM, WITH SOLID STATE VOLTAGE REGULATOR. PROVIDE ALTERNATOR ANTI-CONDENSATION HEATER WHEN LOCATED WITHIN 1/4 MILE OF AN OCEAN OR IN AREA WHERE THE AMBIENT TEMP. IS 32 DEGREES OR LOWER IN ANY TWO CONSECUTIVE DAYS.
   - JACKET WATER HEATER. SIZE AS REQUIRED TO MAINTAIN 90°F AT LOWEST AMBIENT TEMPERATURE FOR PROJECT SITE.
   - ELECTRONIC GOVERNOR WITH ADJUSTABLE CONTROL.
   - ENGINE MOUNTED RADIATOR (122°F/50°C), PUSHER FAN, WATER PUMP AND THERMOSTAT.
   - PROVIDE ELECTRIC STARTER, LEAD ACID TYPE 24VDC BATTERY (250KW GENSETS & SMALLER MAY USE 12VDC SYSTEMS).
   - FULL LOAD OPERATION AT (122°F/50°C) AMBIENT CONDITIONS AND 1,000FT ABOVE MEAN SEA LEVEL. DERATING FOR HOUSING IS UNACCEPTABLE
   - PROVIDE BATTERY HEATER, LUBE OIL HEATER(S) AND OIL PAN HEATER IN AREAS WHERE THE AMBIENT TEMP. IS 32 DEGREES OR LOWER IN ANY TWO CONSECUTIVE DAYS.
4. GENERATOR SHALL BE PROVIDED WITH THE FOLLOWING CHARACTERISTICS:
   - LESS THAN 5% THD AT FULL LOAD AND 3% FOR SINGLE HARMONICS.
   - TELEPHONE INFLUENCE FACTOR LESS THAN OR EQUAL TO 50 AS DETERMINED BY MGI.
   - BRUSHLESS, THREE PHASE EXCITER WITH FULL WAVE SILICON DIODES, SURGE SUPPRESSOR AND EXCITER CIRCUIT BREAKER (IF EXCITER IS NOT INHERENTLY PROTECTED).
   - PERMANENT MAGNET GENERATOR SHALL SUSTAIN 300% SHORT CIRCUIT FOR AT LEAST 10 SECONDS. ELECTRONIC OR CT BOOST METHODS ARE UNACCEPTABLE.
   - TEMPERATURE RISE AT FULL LOAD SHALL NOT EXCEED 105°C.
   - VOLTAGE REGULATOR SHALL BE 3 PHASE RMS SENSING, TEMPERATURE COMPENSATED, PULSE WIDTH MODULATED WITH 0.5% REGULATION.
   - PROVIDE COMPLETE RFI SHIELDING.
   - 100% LOAD TRANSFER IN ONE STEP.
   - RESET SWITCH.
   - TRANSIENT VOLTAGE PERFORMANCE: NOT MORE THAN 19% VARIATION FOR A 50% STEP - LOAD INCREASE OR DECREASE. VOLTAGE RECOVERS TO REMAIN WITHIN THE STEADY STATE OPERATING BAND WITHIN THREE SECONDS.
   - TRANSIENT FREQUENCY PERFORMANCE: LESS THAN 5% VARIATION FOR A 50% STEP LOAD INCREASE OR DECREASE. FREQUENCY RECOVERS TO REMAIN WITHIN THE STEADY STATE OPERATING BAND WITHIN 5 SECONDS.
5. GENERATOR CONTROL PANEL SHALL PROVIDE THE FOLLOWING FUNCTIONS:
   - SHUTDOWN FUNCTIONS: OVERCRANK, OVERSPEED, LOW OIL PRESSURE, HIGH ENGINE TEMP, LOW COOLANT LEVEL, OVERVOLTAGE, UNDERVOLTAGE, UNDER FREQUENCY, AND REMOTE STOP
   - LOAD SHED FUNCTIONS: OVERLOAD AND UNDER FREQUENCY.
   - ALARM/SHUTDOWN/FAULT INDICATION: NOT-IN-AUTO, LOW OIL PRESSURE, PRE-HIGH ENGINE TEMP, PRE-LOW OIL PRESSURE, HIGH/LOW ENGINE TEMP, LOW FUEL, LOW DC LOAD VOLTAGE, OVERLOAD CIRCUIT BREAKER TRIP, GROUND FAULT ALARM, LOW COOLANT LEVEL, OVERCRANK, OVERSPEED OVER/UNDER VOLTAGE, UNDER FREQUENCY, PLUS (2) SPARE INDICATORS.
   - DIGITAL: VOLTMETER, AMMETER, FREQUENCY METER, KW, POWER FACTOR WITH PHASE-TO-PHASE AND PHASE-TO-NEUTRAL SELECTOR SWITCH
   - VOLTAGE/FREQUENCY TRIM CONTROLS +/- 5%.
   - ANTI-CONDENSATION HEATER WHEN LOCATED WITHIN 1/4 MILE OF AN OCEAN OR IN AREA WHERE THE AMBIENT TEMPERATURE IS 32 DEGREES OR LOWER IN ANY TWO CONSECUTIVE DAYS.
   - PROVIDE AND DOCUMENT CONNECTION POINTS FOR DRY CONTACTS AT THE GENERATOR CONTROL PANEL FOR USE BY FIRE ALARM SYSTEM FOR GENERATOR NOT-IN-AUTO, GENERATOR RUNNING ALARM, GENERATOR SET SHUTDOWN/FAIL, GENERATOR LOW FUEL.
6. GENERATOR CIRCUIT BREAKERS SMALLER THAN 400 AMP FRAME SHALL BE 100% RATED, THERMAL-MAGNETIC TRIP WITH INVERSE TIME CURRENT CHARACTERISTICS UNLESS OTHERWISE NOTED. GENERATOR CIRCUIT BREAKERS, 400A FRAME AND LARGER SHALL BE 100% RATED, SOLID-STATE TYPE WITH MINIMUM FIVE FUNCTION COMPLETE WITH BUILT-IN CURRENT TRANSFORMERS. THE FIVE FUNCTIONS SHALL BE INDEPENDENTLY ADJUSTABLE AND CONSIST OF OVERLOAD/LONG TIME AMP RATING, LONG TIME DELAY, SHORT TIME DELAY, SHORT CIRCUIT/INSTANTANEOUS PICKUP, BUT MAY ALSO INCLUDE SHUNT TRIP AND/OR GROUND FAULT IF SO INDICATED ON THE DRAWINGS. RATING PLUGS SHALL BE INTERLOCKED SO THEY ARE NOT INTERCHANGEABLE BETWEEN FRAMES. RATING PLUGS SHALL BE INTERCHANGEABLE (FIXED OR ADJUSTABLE) TYPE AS INDICATED, TO HAVE A REJECTION FEATURE TO PREVENT INTERCHANGING BETWEEN CIRCUIT BREAKER FRAMES, AND INTERLOCKED SUCH THAT A BREAKER CANNOT BE CLOSED AND LATCHED WITH THE RATING PLUG REMOVED. BREAKER SHALL HAVE BUILT-IN TEST POINTS FOR TESTING LONG DELAY AND INSTANTANEOUS, AND GROUND FAULT (WHERE SHOWN) FUNCTIONS OF THE BREAKER BY MEANS OF A 120-VOLT OPERATED TEST KIT. THE GENERATOR MANUFACTURER SHALL ADJUST THIS CIRCUIT BREAKER TO FULLY PROTECT THE GENERATOR FROM OVER-CURRENT PER NEC, OR CEC WHERE ADOPTED 445.12. EVIDENCE OF THIS SETTING SHALL BE MADE IN THE SUBMITTAL, INCLUDING THE THERMAL DAMAGE CURVE OF THE GENERATOR SUPERIMPOSED ON THE BREAKER TRIP CURVE WITH THE SETTINGS AS PART OF POWER SYSTEMS STUDIES REQUIREMENTS OUTLINED ELSEWHERE IN THESE DRAWINGS. GENERATOR SERVING NEC, OR CEC WHERE ADOPTED, ART. 700 EMERGENCY LOADS SHALL HAVE GROUND FAULT INDICATION ONLY - WHICH SHALL CAUSE A GENERATOR ANNUNCIATOR PANEL AND CONTROL PANEL ALARM INDICATION. GENERATOR CIRCUITS SERVING ONLY NEC, OR CEC WHERE ADOPTED, ART. 701 AND/OR ART. 702 STANDBY LOADS THAT ARE 1000A OR LARGER SHALL BE EQUIPPED WITH GFP. WHERE A GENERATOR DOCKING STATION(S) (GDS) IS PROVIDED ON THE PROJECT, GENERATOR OUTPUT CIRCUIT BREAKERS SHALL BE EQUIPPED WITH KIRK-KEY MECHANISM(S) KEYED TO MATCH RESPECTIVE GDS INPUT BREAKER KIRK KEY AND ALSO BE EQUIPPED WITH AUXILIARY CONTACTS INDICATING WHEN THE GENERATOR CIRCUIT BREAKER IS OPEN. THESE CONTACTS SHALL BE WIRED AS NECESSARY TO INDICATE ON THE GENERATOR ANNUNCIATOR PANEL PER NEC, OR CEC WHERE ADOPTED, 700.3(F).
7. WHEN THE GENERATOR SCHEDULE INDICATES REMOTE ANNUNCIATOR PANEL(S) SHALL BE PROVIDED, EACH PANEL SHALL INDICATE ALL "ALARM/SHUTDOWN" EVENTS AT THE GENERATOR CONTROL PANEL AND SHALL INCLUDE THE FOLLOWING ADDITIONAL INDICATORS: LOW LEVEL FUEL, HIGH LEVEL FUEL ALARM, FUEL TANK LEAK ALARM, SHUTDOWN, GENERATOR MAIN CIRCUIT BREAKER OPEN, LOW BATTERY VOLTAGE, BATTERY CHARGER MALFUNCTION, ALARM SILENCE, ATS POSITION INDICATION, AND LAMP TEST SWITCH. WHEN A FIBER OPTIC NETWORK IS INDICATED, PROVIDE THE FOLLOWING ADDITIONAL INDICATORS: FIBER NETWORK POWER SUPPLY LOW VOLTAGE AND FAILURE FOR EACH AUTOMATIC TRANSFER SWITCH. REMOTE ANNUNCIATOR PANEL(S) SHALL BE PROVIDED PER THE FLOOR PLAN(S). WHEN REMOTE ANNUNCIATOR PANEL(S) IS NOT SHOWN ON FLOOR PLAN(S), THE E.C. SHALL INCLUDE ALL COSTS TO PROVIDE ONE REMOTE GENERATOR ANNUNCIATOR PANEL PER GENERATOR, WITH CONDUIT AND CONDUCTORS AS REQUIRED TO LOCATE FLUSH-MOUNTED REMOTE GENERATOR ANNUNCIATOR PANEL(S) A MINIMUM OF 300 FT. FROM THE POINT OF ENTRANCE INTO THE FACILITY OF THE REMOTE GENERATOR ANNUNCIATOR PANEL CONDUIT(S), WITH FINAL LOCATION BY THE OWNER/ARCHITECT.
8. WHEN THE GENERATOR SCHEDULE INDICATES A "NETWORK" OPTION, ONE OR MORE OF THE FOLLOWING SHALL BE PROVIDED:

   "COPPER" - GENERATOR-TO-ATS COMMUNICATIONS SYSTEM VIA STRANDED COPPER CONDUCTORS IN CONDUIT AS REQUIRED.

   "FIBER" - GENERATOR-TO-ATS COMMUNICATIONS SYSTEM VIA FIBER OPTICS IN CONDUIT AS REQUIRED. FIBER OPTICS SHALL BE INSTALLED, TERMINATED AND OTDR-TESTED PER EIA/TIA STANDARDS BY INSTALLERS CERTIFIED BY FIBER OPTIC CABLING MANUFACTURER. PROVIDE ALL NECESSARY FIBER-TO-COPPER TRANSCEIVERS, PATCH CABLES, PATCH PANELS ETC. FOR A COMPLETE AND USEABLE SYSTEM TO INCLUDE SUITABLE BATTERY BACK-UP POWER SOURCE POWER TO ALLOW TRANSCEIVERS TO FUNCTION DURING A POWER OUTAGE.
9. WHEN THE GENERATOR SCHEDULE INDICATES A "COMMUNICATION" OPTION, ONE OR MORE OF THE FOLLOWING SHALL BE PROVIDED:

   "SNMP" - PROVIDE SNMP OUTPUT/INTERFACE DEVICE WITH GENERATOR/ATS/POWER SYSTEM EQUIPMENT WHICH PROVIDES SUPPORT OF SNMP TO INTERFACE WITH GENSET MANUFACTURER HTML WEB BROWSER SERVER SOFTWARE AND/OR FOR INTEGRATION INTO OWNER MANAGEMENT SYSTEM SOFTWARE AS REQUIRED. REPORTING/MONITORING PARAMETERS SHALL BE, AT MINIMUM, THE SAME POINTS MONITORED BY THE GENERATOR ANNUNCIATOR PANEL UNLESS OTHERWISE NOTED. INSTALL ONE COPY OF WEB BROWSER SOFTWARE ON OWNER FURNISHED SERVER AND MAKE FULLY FUNCTIONAL IN ALL ASPECTS TO INCLUDE FULL TEXT PAGING AND EMAIL NOTIFICATION FEATURES. ADDITIONALLY, PROGRAM AND INTEGRATE INPUT/OUTPUT MODULE(S) AS REQUIRED TO REPORT ATS POSITION(S), SUB-BASE TANK(S) ALARMS AND FUEL LEVEL(S), REMOTE FILL STATION(S), ABOVEGROUND STORAGE TANK(S) (AST) ALARMS (IF PROVIDED ON PROJECT - SEE AST SPECIFICATIONS) AND FUEL MAINTENANCE SYSTEM(S) (FMS) ALARMS (IF PROVIDED ON PROJECT - SEE FMS SPECIFICATIONS). WHEN INTEGRATING WITH OWNER MANAGEMENT SYSTEM SOFTWARE, PROVIDE POWER SYSTEM PROTOCOL POINT ID/REGISTERS/BITMAPS FOR USE BY OTHERS TO ENABLE REPORTING/MONITORING/ADJUSTING OF GENERATOR/ATS/POWER SYSTEM EQUIPMENT OPERATING PARAMETERS.
10. THE GENERATOR SET SHALL BE PROVIDED WITH A WEATHERPROOF HOUSING, AT MINIMUM, WHICH ALLOWS THE GENERATOR SET TO OPERATE AT FULL RATED LOAD IN THE AMBIENT CONDITIONS PREVIOUSLY SPECIFIED. ENCLOSURE SHALL BE CONSTRUCTED IN EITHER OF 2-WAYS:

    A. WHEN GENERATOR IS LOCATED MORE THAN 1/4 MILE OF AN OCEAN OR OTHER SALT WATER BODY, PROVIDE ENCLOSURES OF 12 GAUGE GALVANIZED STEEL, ALL WELDED CONSTRUCTION WITH SEMI RIGID ACOUSTIC SOUND BOARD HAVING A U.L. FLAME SPREAD OF 25 OR LESS ARE ACCEPTABLE. INTERIOR SHALL BE FULLY LINED WITH A GALVANIZED PERFORATED SHEET, RIVETED TO THE FRAMEWORK AT 24" ON CENTER. SCREW FASTENERS ARE NOT ACCEPTABLE. PROVIDE STAINLESS STEEL EXTERIOR HARDWARE.

    B. WHEN GENERATOR IS LOCATED 1/4 MILE OR LESS FROM AN OCEAN OR OTHER SALT WATER BODY, PROVIDE ENCLOSURE CONSISTING OF PRE-PAINTED FORMED ALUMINUM PANELS CONSTRUCTED OF MARINE GRADE 0.080 MINIMUM. ROOF SHALL BE CONSTRUCTED OF MARINE GRADE MILL FINISH 0.125 MINIMUM THICKNESS FORMED ALUMINUM PANELS USING AN INTERLOCKING STANDING SEAM DESIGN CAPABLE OF SUPPORTING 75 POUNDS PER SQUARE FOOT. ALL EXTERNAL ATTACHING HARDWARE SHALL BE STAINLESS STEEL SCREW TYPE MECHANICAL FASTENERS.

    C. THE FOLLOWING ADDITIONAL REQUIREMENTS APPLY TO GENERATOR ENCLOSURES:
    - ENCLOSURE SHALL BE DESIGNED USING THE MAIN WIND FORCE RESISTING SYSTEM ANALYSTICAL PROCEDURE OF AMERICAN SOCIETY OF CIVIL ENGINEERS ASCE 7-05, CURRENTLY ADOPTED EDITION. THE ENCLOSURE, INCLUDING ANY SUB-BASE TANKS, RADIATOR DISCHARGE DUCTING, SPRING ISOLATORS, ETC. THAT MAKE UP THE GENERATOR SYSTEM, SHALL WITHSTAND WIND LOADING BASED UPON PROJECT LOCATION, WIND IMPORTANCE FACTOR AND WIND EXPOSURE - SEE WIND CRITERIA AND APPLICABLE SITE WIND CONDITIONS SPECIFIED ELSEWHERE IN THESE DOCUMENTS. WHERE WIND CRITERIA AND APPLICABLE SITE WIND CONDITIONS ARE NOT SPECIFIED IN THESE DOCUMENTS, CONTRACTOR SHALL OBTAIN THIS CRITERIA VIA PRE-BID RFI.
    - SUBMITTAL FOR GENERATOR SYSTEM AND ENCLOSURE SHALL INCLUDE EITHER 1) WIND ENGINEERING CALCULATIONS STAMPED AND SIGNED BY A STRUCTURAL ENGINEER REGISTERED IN THE PROJECT'S STATE OR 2) MANUFACTURER'S CERTIFICATION TO WITHSTAND SPECIFIED WIND CONDITIONS THAT MEET THE PROJECT'S WIND SPEED, WIND IMPORTANCE FACTOR AND WIND EXPOSURE CATEGORY.
    - ENCLOSURE SHALL HAVE A MINIMUM OF FIVE COMMON KEY LOCKING DOORS. DOORS SHALL HAVE CROSS BRACING, DOOR HOLDBACKS, GUTTERS, BUBBLE TYPE GASKET, PANIC HARDWARE (INTERIOR) AND 2-POINT LOCKING ROLLER HARDWARE (EXTERIOR). ALL DOORS SHALL BE EQUIPPED WITH STAINLESS STEEL HARDWARE/HINGES, DOOR POSITION SWITCHES/CONTACTS (SENTROL OR EQUAL) FOR CONNECTION TO SECURITY SYSTEM. A DOOR SHALL BE LOCATED DIRECTLY IN FRONT OF EACH GENERATOR MOUNTED CIRCUIT BREAKER TO PROVIDE CODE-REQUIRED CLEARANCES.
    - ENCLOSURE SHALL HAVE A COMPLETE PRE-FABRICATED EXHAUST SYSTEM FOR INTERNAL MOUNTING OF THE SILENCER INCLUDING STAINLESS STEEL FLEX CONNECTOR, SILENCER, ELBOW, RAIN CAP, RAIN SHIELD AND STRUCTURAL SUPPORT AS REQUIRED. PROVIDE INSULATION BLANKETS ON EXHAUST PIPING AND SILENCER, WITH SILENCER MOUNTING BRACKETS. IF VERTICAL RADIATOR DISCHARGE IS INDICATED IN GENERATOR SCHEDULE, THEN THE EXHAUST PIPE OUTLET SHALL BE CENTERED IN THE SLIPSTREAM OF THE VERTICAL DISCHARGE DUCT. EXTERNAL MOUNTING OF THE SILENCER IS UNACCEPTABLE. IF PARTICULATE MATTER FILTER IS REQUIRED BY LOCAL AIR QUALITY MANAGEMENT AUTHORITY, A COMBINATION SILENCER/PARTICULATE MATTER FILTER SHALL BE MOUNTED INTERNALLY WITHIN THE ENCLOSURE.
    - ENCLOSURE INTAKE AIR SHALL ENTER THE ENCLOSURE THROUGH AN ACOUSTIC BAFFLE SECTION LOCATED IN THE REAR SIDEWALLS AND/OR ROOF TOP OF THE ENCLOSURE AND SHALL INCLUDE AND 1/2" X 1/2" STAINLESS STEEL OR ALUMINUM RODENT/BIRD SCREEN. AIR INTAKE SHALL BE 1250 FEET PER MINUTE OR LESS TO MINIMIZE WATER INTRUSION.
    - ENCLOSURE RADIATOR DISCHARGE AIR SHALL PASS THROUGH A HORIZONTAL OR VERTICAL DISCHARGE PLENUM SECTION AS INDICATED IN GENERATOR SCHEDULE. EITHER TYPE SHALL INCLUDE A 1/2" X 1/2" STAINLESS STEEL OR ALUMINUM RODENT/BIRD SCREEN. ADDITIONALLY, WHEN LOCATED IN AREAS WHERE AMBIENT TEMPERATURE REACHES 20 DEGREES F, PROVIDE A GRAVITY DAMPER(S). THE AIR HANDLING SYSTEM SHALL BE ENGINEERED AND CONSTRUCTED SO AS NOT TO EXCEED A TOTAL OF 0.50 INCHES OF WATER GAUGE STATIC PRESSURE DROP (INTAKE AND DISCHARGE COMBINED TO INCLUDE UNIT-MOUNTED LOAD BANK, IF REQUIRED) WITH MINIMAL WATER INTRUSION. VERTICAL RADIATOR DISCHARGE DUCTING SHALL BE EQUIPPED WITH A RAIN GUTTER AND RAIN PORTS TO ALLOW WATER TO DRAIN OUT THE BOTTOM OF THE DUCT. INCLUDE ALL COSTS TO EXTEND HORIZONTAL RADIATOR DISCHARGE PLENUM FROM THE GENERATOR ENCLOSURE TO ANY ARCHITECTURAL SCREEN WALL AND ENCOMPASS ARCHITECTURAL SCREEN WALL LOUVERED OPENING(S) AS REQUIRED.
    - ENCLOSURE ROOF SHALL BE PITCHED MINIMUM OF 1/2" ON 12" - FOR GENSETS OVER 40" WIDE.
    - ENCLOSURE FOR 750KW OR LARGER GENERATOR OR GENERATORS WITH "WALK-IN" STYLE ENCLOSURES, PROVIDE INTEGRAL UNIT-MOUNTED 3-PHASE, 4-WIRE UNIT-MOUNTED LOAD CENTER. HOUSING SHALL BE PRE-WIRED TO ALL NECESSARY JACKET HEATERS, BATTERY CHARGERS, RETURN PUMPS, ANTI-CONDENSATE HEATERS ALONG WITH A MINIMUM OF (2) EACH 120V, LINEAR FLUORESCENT, WET LOCATION LISTED FIXTURES WITH EMERGENCY BATTERY PACKS (2-LAMP, T8, VAPORTITE HIGH IMPACT ACRYLIC LENSES, 1100 LUMEN EMERGENCY BATTERY PACKS), (2) 120V, 15A GFCI WEATHER PROOF RECEPTACLES EVENLY DISTRIBUTED ON EACH SIDE OF THE GENSET - LOCATED TO MAINTAIN ALL CODE CLEARANCES. E.C. TO PROVIDE FEEDER, AS REQUIRED, FROM NEARBY PANELBOARD.
    - ENCLOSURE SHALL HAVE OPENINGS FOR FUME DISPOSAL, OIL DRAIN, AND RADIATOR DRAIN.
    - LIFTING RINGS SHALL BE WELDED TO EACH CORNER OF ENCLOSURE BASE FRAME FOR LIFTING ENCLOSURE.
    - WHEN ENCLOSURE IS PAD MOUNTED, ANGLE BRACKETS OR OTHER APPROVED METHOD SHALL BE SUPPLIED ON OUTSIDE OF ENCLOSURE FRAME FOR CONNECTION TO PAD. SUB-BASE TANK-MOUNTED ENCLOSURES HAVE HOLES DRILLED IN STRUCTURAL BASE FRAME TO MATCH THE TOP OF THE TANK.
    - U.O.N. ENCLOSURES AND SUB BASE TANKS SHALL HAVE: A) (2) COATS OF IRON OXIDE ALKYD PRIMER (TOTALING 2.5 MILS) APPLIED TO ALL NON-GALVANIZED STEEL SURFACES WITH FINISH COAT OF A 3 MIL, HIGH QUALITY ALKYD ENAMEL, SUITABLE FOR INLAND ENVIRONMENTS. OR B) DUAL COAT CATHODIC ELECTRO-DEPOSITION PROCESS WITH 1.2 MIL BAKE-CURED EPOXY PRIMER AND A 2.7 MIL BAKE-CURED ACRYLIC TOP COATING. SUB-BASE TANK BOTTOMS SHALL BE FINISHED WITH A COAL TAR-BASED EPOXY OF 3 MILS. ENCLOSURE COLOR SHALL BE EITHER STANDARD FACTORY COLOR OR CUSTOM COLOR AS INDICATED IN GENERATOR SCHEDULE. CUSTOM COLORS SHALL BE WHITE, BEIGE OR OTHER LIGHT COLOR TO MATCH/COMPLIMENT BUILDING FINISH AS SELECTED BY THE ARCHITECT.
    - WHEN INDICATED IN THE GENERATOR SCHEDULE, ENCLOSURE SHALL HAVE PROVISIONS FOR ADDING A UNIT-MOUNTED LOAD BANK AND LOAD BANK CONTROL PANEL.

    D. WHEN INDICATED IN THE GENERATOR SCHEDULE, PROVIDE ONE OF THE FOLLOWING SOUND ATTENUATION LEVELS TO THE GENERATOR SYSTEM ENCLOSURE:

    "STAGE 1" - MINIMUM ACCEPTABLE SOUND LEVEL SHALL BE:
    - 81 dBA AT 23 FEET IN A FREE FIELD ENVIRONMENT (600KW AND LARGER)
    - 85 dBA AT 23 FEET IN A FREE FIELD ENVIRONMENT (SMALLER THAN 600KW)

    E. ENCLOSURES SHALL BY MANUFACTURED BY LISTED GENERATOR MANUFACTURERS, PROFESSIONAL POWER PRODUCTS INC., FREEMAN ENCLOSURE SYSTEMS, ENERCON ENGINEERING, TRAMONT OR SURROUND TECHNOLOGIES INC.
11. WHEN INDICATED IN THE GENERATOR SCHEDULE PROVIDE ONE OF THE FOLLOWING LOAD BANK TYPES:

    "UNIT-MOUNTED" - PROVIDE U.L. LISTED, INTEGRAL, UNITY POWER FACTOR, RESISTIVE LOAD BANK SIZED TO PROVIDE 60% OF THE GENERATOR FULL KW OUTPUT. UNIT SHALL BE MOUNTED DIRECTLY TO GENERATOR ENCLOSURE/FRAME VIA DEDICATED SUPPORT STRUCTURE. MOUNTING/SUPPORTING LOAD BANK TO RADIATOR SUPPORT IS FORBIDDEN. LOAD BANK FRAME SHALL BE CONSTRUCTED OF ALUMINIZED STEEL. RESISTANCE LOAD ELEMENTS SHALL CONSIST OF CHROMIUM ALLOY WIRE AND DERATED TO 50% OF THE MAX. CONTINUOUS RATING OF THE WIRE. LOAD BANK COOLING SHALL BE PROVIDED BY THE GENERATOR'S ENGINE-DRIVEN FAN. LOAD BANK CONTROL POWER SHALL BE PROVIDED VIA CONTROL POWER TRANSFORMER SUPPLIED BY THE GENERATOR. LOAD BANK CONTROL PANEL SHALL BE MOUNTED REMOTELY WITHIN THE GENSET ENCLOSURE AS NEAR THE GENSET CONTROL PANEL AS POSSIBLE. CONTROL PANEL SHALL BE EQUIPPED WITH AUTO LOAD DUMP FEATURE TO DUMP LOAD BANK UPON LOSS OF COMMERCIAL POWER. CONTROL PANEL SHALL ADD/SHED LOAD IN 5 EQUAL STEPS. EACH STEP SHALL BE PROVIDED WITH BRANCH CIRCUIT FUSING. GENERATOR-MOUNTED CIRCUIT BREAKER SHALL BE SIZED TO SUPPORT THE LOAD BANK AS REQUIRED.

    PORTABLE, UNIT MOUNTED, AND REMOTE LOAD BANKS SHALL BE NRTL-LISTED AND SHALL BE BY AVTRON OR APPROVED EQUAL. LOAD BANK MANUFACTURER SHALL HAVE A MINIMUM OF 10 YEARS EXPERIENCE IN THE MANUFACTURE OF LOAD BANKS AND HAVE A MINIMUM OF 25 SIMILAR INSTALLATIONS.
12. WHEN GENERATOR SCHEDULE INDICATES "BEST BATTERY SYSTEM" OPTION, PROVIDE THE FOLLOWING:
    - A SECOND ELECTRIC STARTER WITH A SECOND BATTERY SYSTEM TO MATCH THE FIRST BATTERY SYSTEM (600KW AND LARGER).
    - A SECOND BATTERY HEATER IF REQUIRED ON FIRST BATTERY SYSTEM.
    - INTERCONNECT BOTH FIRST/SECOND BATTERY SYSTEMS WITH APPROPRIATELY RATED/LOCATED DIODES OR RELAYS SUCH THAT BOTH BATTERIES ENGAGE BOTH STARTERS SIMULTANEOUSLY, AND SUCH THAT BOTH ALTERNATORS CHARGE BOTH BATTERY SYSTEMS SIMULTANEOUSLY. DC BATTERY COMMON POINT OF CONNECTION SHALL ALSO FEED GENSET PANEL SO THAT A FAILURE OF EITHER BATTERY SYSTEM STILL ALLOWS GENSET CONTROL PANEL TO FUNCTION. MAKE ALL NECESSARY GENSET CONTROL PANEL PROGRAMMING CHANGES TO ALLOW SIMULTANEOUS BATTERY/ALTERNATOR OPERATION. INCREASE ENGINE RPM RAMP-UP RATIO TO ACHIEVE FASTEST LOADING POSSIBLE.
    - A SECOND ENGINE MOUNTED-BATTERY CHARGING ALTERNATOR WITH ANTI-CONDENSATE HEATER IF REQUIRED ON FIRST ALTERNATOR SHALL BE PROVIDED ON GENERATORS 1500KW OR LARGER.
    - BEST BATTERY SYSTEM SHALL BE BY STORED ENERGY SYSTEMS OR EQUAL.
13. GENERATOR SYSTEM HEIGHT, INDICATED IN THE GENERATOR SCHEDULE, SHALL BE THE MAXIMUM ALLOWED HEIGHT OF THE GENERATOR TO INCLUDE THE HEIGHT OF THE GENERATOR HOUSING, SUB-BASE TANK, VIBRATION ISOLATORS, ETC. THIS IS A CRITICAL DIMENSION THAT HAS BEEN COORDINATED WITH SCREEN AND OR ENCLOSURE WALL HEIGHTS, ETC. NO ADDITIONAL COST SHALL BE BORNE BY THE OWNER TO MODIFY OTHER STRUCTURES OR SYSTEMS TO ACCOMMODATE A GENERATOR SYSTEM TALLER THAN SPECIFIED.
14. GENERATOR SYSTEM WEIGHT, INDICATED IN THE GENERATOR SCHEDULE, SHALL BE THE MAXIMUM ALLOWED WEIGHT OF THE GENERATOR TO INCLUDE THE WEIGHT OF ENGINE/GENERATOR, GENERATOR HOUSING, ANY UNIT-MOUNTED LOAD BANK, SUB-BASE TANK FULL OF FUEL, VIBRATION ISOLATORS, ACCESSORIES, ETC.
15. WHERE THE HEIGHT OF GENERATOR-MOUNTED CIRCUIT BREAKERS, LOAD BANK CONTROLS OR GENERATOR CONTROLS EXCEED 6'-0" AFG, PLATFORM SYSTEM(S) WITH LADDERS/STAIRS AND/OR RAILINGS SHALL BE PROVIDED AS FOLLOWS:
    - PLATFORM SYSTEMS - TO INCLUDE STAIRS, LADDERS, HORIZONTAL/VERTICAL SUPPORT MEMBERS, DIAGONAL MEMBERS, HAND RAILINGS, STAIR RAILINGS, TOE-PLATES AND OTHER MISCELLANEOUS COMPONENTS - SHALL BE MANUFACTURED FROM RR-G-1602-COMPLIANT ALUMINUM WITH STAINLESS STEEL HARDWARE. ADDITIONALLY, PLATFORM/STAIR/LADDER/WALK SURFACE MATERIAL SHALL BE SELF-CLEANING ALUMINUM SAFETY GRATING WITH RAISED PROJECTIONS/DESIGN-SWAGED BARS TO PROVIDE SLIP-RESISTANCE AND DRAINAGE. PLATFORM FRAMES SHALL BE PRE-DRILLED TO ACCEPT/CONNECT LADDERS, STAIRS, HAND RAILING VERTICAL SUPPORTS. PLATFORMS SHALL HAVE A MINIMUM UNIFORM LOAD RATING OF 525 LBS. PER 3' SECTION. LADDERS/STAIRS SHALL HAVE A MINIMUM UNIFORM LOAD RATING OF 300 LBS.
    - PLATFORM WALKING SURFACE ELEVATIONS SHALL BE SET NO GREATER THAN 1.5" ABOVE THE BOTTOM OF THE GENERATOR BASE FRAME. NO CONNECTIONS SHALL BE MADE TO THE GENERATOR SUB BASE TANK. WHERE A PLATFORM ELEVATION EXCEEDS 30" ABOVE FINISHED GRADE OR WHERE ACCESS STAIRS REQUIRE (4) OR MORE RISERS, STAIR RAILS AND HAND RAILS W/MID RAILS SHALL BE PROVIDED ABLE TO RESIST A 250 LBS CONCENTRATED LOAD APPLIED IN ANY DIRECTION AT ANY POINT AND A 50 LBS UNIFORM LOAD APPLIED IN ANY DIRECTION. STAIR/HAND RAILING OPENINGS SHALL COMPLY WITH AREA OCCUPANCY CLASSIFICATIONS.
    - UON ON PLANS, PLATFORMS SHALL GENERALLY RUN THE LENGTH OF EACH SIDE OF A GENERATOR TO ALLOW ACCESS TO EACH ENCLOSURE SERVICE DOOR FROM A COMMON WALK SURFACE. THE GENERATOR MANUFACTURER SHALL LOCATE GENERATOR CONTROL PANEL TO BE ACCESSIBLE FROM THE LONG-SIDE OF THE GENERATOR TO AVOID USE OF "U" SHAPED PLATFORM SYSTEMS. PLATFORM SHALL PROVIDE FOR 180 DEGREE "FULL SWING OPENING" OF ALL SIDE SERVICE DOORS - 48" MIN. PLATFORM WIDTH. LADDERS/STAIRS SHALL BE PROVIDED AT EACH END OF A PLATFORM TO PROVIDE TWO MEANS OF EGRESS OFF THE PLATFORM WALK SURFACE. MINIMUM PLATFORM DEPTH SHALL BE 48" UON.
    - PLATFORM SYSTEMS SHALL MEET OSHA REQUIREMENTS INCLUDING OSHA 3124 - STAIRWAYS AND LADDERS, OSHA 1910.24 - FIXED INDUSTRIAL STAIRS AND 29 CFR 1926.1050-1060. ADDITIONALLY, PLATFORM SYSTEM SHALL BE DESIGNED/INSTALLED IN A MANNER THAT INTEGRATES INTO THE GENERATOR/UTILITY ENCLOSURE IN A CODE-COMPLIANT MANNER. IN NO CASE SHALL PLATFORM SYSTEM INTERFERE WITH SERVICEABLE GENERATOR/SUB-BASE TANK COMPONENTS.
    - PLATFORM SYSTEMS SHALL BY MANUFACTURED BY LISTED GENERATOR MANUFACTURERS, GLOBAL POWER COMPONENTS, PPPI, OR GENERATOR SYSTEM SUPPORT INC.
16. THE PROPANE ENGINE USED ON THE GENERATOR MUST MEET ALL LOCAL, STATE, AND FEDERAL RULES AND REGULATIONS FOR EMERGENCY/STANDBY COMPRESSION IGNITION ENGINES WHICH OPERATE FOR EMERGENCY DUTY AND LESS THAN 50 HOURS PER YEAR FOR TESTING AND MAINTENANCE. THIS REQUIREMENT INCLUDES ANY AFTERTREATMENT / PARTICULATE MATTER FILTERING NECESSARY TO COMPLY WITH SUCH REGULATIONS.
17. NOT USED.
18. GENERATOR(S) SHALL MEET THE FOLLOWING ADDITIONAL AIR QUALITY EMMISSIONS REQUIRMENTS:

    A. ALL EQUIPMENT USED FOR AFTER-TREATMENT EMISSION REDUCTION SHALL BE CERTIFIED. CERTIFICATION OF REDUCTION CAPABILITIES OF THE AFTER-TREATMENT DEVICE SHALL BE FROM THE STATE OF CALIFORNIA AIR RESOURCES BOARD (CARB).
19. THE CONTRACTOR SHALL BE RESPONSIBLE FOR THE DESIGN AND INSTALLATION OF SEISMIC RESTRAINT / ATTACHMENT SYSTEMS VIA LICENSED STRUCTURAL ENGINEER IN THE STATE IN WHICH THE PROJECT OCCURS.
20. INCLUDE ALL COSTS IN BASE BID TO MEET THE PERMIT/FILING REQUIREMENTS OF THE LOCAL/REGIONAL WATER QUALITY CONTROL BOARD OR SIMILAR AUTHORITY GOVERNING THE PROJECT SITE.
21. SHOP DRAWING INFORMATION SHALL BE PROVIDED PER GENERAL SPECIFICATION REQUIREMENTS SHOWING COMPLIANCE WITH THE ABOVE SPECIFICATION. INCLUDE ALL REQUIRED NETWORK WIRING DIAGRAMS, COMPONENTS, ETC.
22. FINAL INSTALLATION SHALL BE TESTED AND APPROVED BY THE MANUFACTURER'S FACTORY TRAINED TECHNICIAN. TEST TO INCLUDE 100% RESISTIVE LOAD BANK TEST FOR (2) HOURS AND ATS TRANSFER TEST.
23. PROVIDE A MINIMUM OF (3) HOURS OF OPERATOR TRAINING AT CONCLUSION OF TESTING TO PERSONNEL -DESIGNATED BY THE OWNER- UTILIZING BOTH O&M MANUALS AND ON-SITE, HANDS-ON TRAINING COVERING ITEMS SUCH AS PROPER STARTING, TESTING AND OPERATION OF THE GENSET AND ATS, PROGRAMMING/USE OF GENSET CONTROL SYSTEM TO INCLUDE ADDING/CHANGING SET/ALARM POINTS, MANIPULATING GRAPHIC SCREEN INTERFACES. TRAINING SHALL ALSO ADDRESS PREVENTIVE MAINTENANCE INCLUDING, BUT NOT LIMITED PROPER BATTERY MAINTENANCE, FUELING METHODS, FUEL FILTER CHECKS, USE OF ANY LOAD BANKS PROVIDED ON THE PROJECT, ETC. PROVIDE TRAINING FOR APPROPRIATE RECORD KEEPING METHODS FOR MAINTENANCE, RESPECTIVE MAINTENANCE CYCLES FOR KEY SYSTEM COMPONENTS AS WELL AS ANY PERMIT-TO-OPERATE RECORD KEEPING PROCEDURES. DOCUMENT TRAINING WITH A DIGITAL VIDEO RECORDER. PROVIDE AN ELECTRONIC COPY OF TRAINING SESSION TO THE OWNER AT THE COMPLETION OF THE TRAINING.
24. GENERATOR MANUFACTURER SHALL PROVIDE AND WARRANTY ALL AUTOMATIC TRANSFER SWITCH EQUIPMENT. PROVIDE DOCUMENTATION THAT DEMONSTRATES COMPATIBILITY BETWEEN GENERATOR(S) AND ATS(S) USED ON THIS PROJECT AS A PART OF THE SUBMITTAL PACKAGE. SEE ATS SPECIFICATIONS FOR MORE INFORMATION.
25. GENERATOR EQUIPMENT SHALL BE PROVIDED BY KOHLER, CATERPILLAR, CUMMINS/ONAN, OR EQUIVALENT SYSTEM BY MTU ONSITE ENERGY.

IDENTIFICATION STAMP
DIV. OF THE STATE ARCHITECT
APP: 02-118630 INC:
REVIEWED FOR
SS ☐ FLS ☐ ACS ☑
DATE: 04/13/2021

OFFICE OF THE STATE FIRE MARSHAL
APPROVED FIRE AND PANIC ONLY
Approval of this plan does not authorize or approve any omission or deviation from applicable regulations. Final approval is subject to field inspection. One set of approved plans shall be available on the project site at all times.
PERMIT NO.: 20-N-2332-CP
REVIEWED BY: LITO CATAYLO, OSFM
DATE: 3/1/2021

GENERAL SERVICES
Department of General Services
State of California
Real Estate Services Division
Project Management & Development Branch
707 Third Street, Suite 4-105
West Sacramento, California 95605

NICHOLS MELBURG & ROSSETTO
ARCHITECTS + ENGINEERS
300 Knollcrest Drive
Redding, CA. 96002
(530) 222-3300 (530) 222-3538 FAX
http://www.nmrdesign.com

Copyright © 2019
All ideas, designs, arrangements and plans indicated or represented by this drawing are owned by, and the property of, NICHOLS, MELBURG and ROSSETTO and were created, evolved and developed for use on, and in conjunction with, the specified project. None of such ideas, designs, arrangements or plans shall be used by, or disclosed to any person, firm or corporation for any purpose whatsoever without the written permission of NICHOLS, MELBURG and ROSSETTO.

LICENSE STAMPS
REGISTERED PROFESSIONAL ENGINEER
RAYMOND W. SWARTZ
No. E15610
Ex. 12/31/2021
ELECTRICAL
STATE OF CALIFORNIA
Date Signed: 3/25/2021

CONSULTANT
tk1sc
COLLABORATIVE
11870 Pierce Street, Suite 160
Riverside, California 92505
951.299.4160 www.tk1sc.com
Project Leader - Jerry Leonhardt
Electrical Lead - Reid Cordry
tk1sc Job #:2019-0228A

DRAWING STATUS
CONSTRUCTION DOCUMENTS

ISSUE

No.	Date	Description
1	10/20/2020	INITIAL PLAN REVIEW
2	01/22/2021	AGENCY RESUBMITTAL
3	03/22/2021	AGENCY RESUBMITTAL

If drawing is not 30" x 42" it is a reduced print

PROJECT
RESIDENTIAL CENTER, UKIAH: REPLACEMENT OF EXISTING RESIDENTIAL CENTER

440 EAST HILL ROAD
WILLITS, CALIFORNIA 95490
MENDOCINO COUNTY
CALIFORNIA CONSERVATION CORP

Supervisor | Designed | Drawn: Author

DSA Application No.
02-118630

SHEET TITLE
GENERATOR SPECIFICATIONS

DGS Project Number: 000000000001826
NMR Project Number: 18-6456

Reference North: NORTH
Sheet Scale: 12" = 1'-0"
Sheet Number: E404

ISSUE DATE
July 9, 2021

Plot Date: 3/22/2021 11:59:13 AM
File Name: BIM 360://CCC Willits Residential Center/E_CCC Willits_COMMON_2019-0228A.rvt

AUTOMATIC TRANSFER SWITCH SCHEDULE

ATS	AMPS	VOLTAGE	PHASE	WIRE	POLE	DESIGNATED SEISMIC SYS	NEMA/ MOUNTING	BYPASS ISOLATION	NETWORK/ COMMUNICATIONS	DESIGN BASIS	REMARKS
ATSMP	600	480Y/277	3	4	4	NO	1/F	NO	COPPER/ BMS	KOHLER	-

DESIGNATED SEISMIC SYSTEM:

ONE OR MORE ATS(s) ON THIS PROJECT ARE PART OF A DESIGNATED SEISMIC SYSTEM (COMPONENT IMPORTANCE FACTOR, I p = 1.5). SEE ATS SPECIFICATIONS FOR ADDITIONAL REQUIREMENTS.

ATS SYSTEM SCHEMATIC:

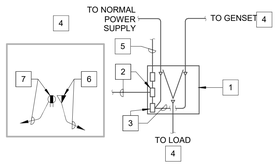

ATS SYSTEM PLAN NOTES:

1. AUTOMATIC TRANSFER SWITCH (ATS) PER AUTOMATIC TRANSFER SWITCH SCHEDULE AND SYSTEM SPECIFICATIONS.

2. ATS DISTRIBUTED CONTROLS, PROVIDING FOR AUTOMATIC SELECTIVE LOAD SHED/LOAD PICK-UP PER NEC (OR CEC WHERE ADOPTED) ART. 700.4(B) REQUIREMENTS, START, STOP, AND MONITORING/ALARM FUNCTIONS PER SYSTEM SPECIFICATIONS. PROVIDE 3/4"C., MINIMUM, WITH CONDUCTORS AS REQUIRED PER MANUFACTURER'S RECOMMENDATIONS. PROVIDE COPPER OR FIBER OPTIC NETWORK AS INDICATED ON ATS SCHEDULE. SEE SYSTEM SPECIFICATIONS FOR MORE INFORMATION.

3. FACTORY INSTALLED ATS AUTOMATIC CONTROLS. SEE SYSTEM SPECIFICATIONS FOR MORE INFORMATION.

4. REFER TO SINGLE LINE DIAGRAM FOR MORE INFORMATION.

5. PROVIDE ELEVATOR PRE-TRANSFER & POST TRANSFER CONTACTS, ONE NORMALLY OPEN, ONE NORMALLY CLOSED-EQUIPPED WITH 0-45 SEC, 2 AMP MINIMUM ADJUSTABLE TIME DELAY. PROVIDE CONDUIT AND CONDUCTORS TO ELEVATOR CONTROLLER(S) AS REQUIRED.

6. WHEN "SNMP" OPTION IS INDICATED IN AUTOMATIC TRANSFER SWITCH SCHEDULE, PROVIDE 3/4"C. WITH CATEGORY 6 DATA CABLE FROM ATS SNMP INTERFACE DEVICE TO NEAREST IDF CLOSET TO ALLOW COMMUNICATIONS PER THE ATS SYSTEM SCHEDULE AND SPECIFICATIONS. COIL 30' OF EXTRA CABLE WITHIN IDF CLOSET. COILED CABLE SHALL BE TAGGED, NOTING FAR-END TERMINATION LOCATION AND "ATS LAN INTERFACE CABLE" WHEN "BMS" OPTION IS INDICATED IN ATS SCHEDULE, PROVIDE 3/4"C. WITH REQUIRED CONDUCTORS TO NEAREST BMS GATEWAY/INTERFACE DEVICE. COORDINATE LOCATION, CONDUCTOR QUANTITIES/TYPES, AND TERMINATION LOCATIONS WITH MECHANICAL CONTROLS CONTRACTOR. SEE AUTOMATIC TRANSFER SWITCH SCHEDULE(S) AND SPECIFICATIONS FOR ADDITIONAL REQUIREMENTS. ALL CONDUIT/PULL BOXES SHALL BE INSTALLED PER GENERAL COMMUNICATIONS PATHWAY NOTES.

7. PROVIDE 120V POWER SOURCE AS REQUIRED FOR "SNMP" GATEWAYS, ETC. POWER SOURCE SHALL BE FROM STANDBY POWER SYSTEM, IF PROVIDED ON PROJECT, TO INCLUDE ANY REQUIRED STEP-DOWN/AUTO TRANSFORMER NECESSARY TO DERIVE 120V. IF STANDBY SYSTEM IS NOT PROVIDED, SOURCE SHALL BE FROM THE NORMAL/UTILITY POWER SYSTEM TO INCLUDE ANY REQUIRED STEP-DOWN/AUTO TRANSFORMER NECESSARY TO DERIVE 120V. EMERGENCY POWER SHALL NOT BE USED FOR THIS PURPOSE.

ATS SYSTEM REQUIREMENTS:

1. THE CONTRACTOR SHALL BE RESPONSIBLE FOR THE FURNISHING OF ALL MATERIAL, LABOR, EQUIPMENT, AND SERVICES, IN CONNECTION WITH THE INSTALLATION OF A COMPLETE AND FULLY FUNCTIONING AND CODE COMPLIANT INSTALLATION.

2. IT IS THE INTENT OF THE CONTRACT DOCUMENTS, WHICH ARE PRESENTED IN A DIAGRAMMATIC FORMAT, TO PROVIDE CONTRACTOR INFORMATION THAT SUPPLEMENTS AND ENHANCES THE GENERALLY ACCEPTED CONSTRUCTION MEANS, METHODS, TECHNIQUES, SEQUENCES AND PROCEDURES EMPLOYED IN CONNECTION WITH INSTALLATION OF THIS TYPE OF PRODUCT/ SYSTEM.

3. THE CONTRACTOR SHALL ALSO INCORPORATE THE REQUIREMENTS OF THE MANUFACTURER'S INSTALLATION INSTRUCTIONS/ WARRANTY REQUIREMENTS AS PART OF THE REQUIREMENTS OF THE CONSTRUCTION DOCUMENTS. IN THE EVENT OF A CONFLICT BETWEEN THE CONTRACT DOCUMENT REQUIREMENTS AND THE MANUFACTURERS INSTALLATION REQUIREMENTS, THE MORE STRINGENT REQUIREMENTS SHALL APPLY - UNLESS THE MORE STRINGENT REQUIREMENT VOIDS APPLICABLE WARRANTIES OR VIOLATES THE REQUIREMENTS OF THE LOCAL AUTHORITY HAVING JURISDICTION. ANY SUCH CONFLICT SHALL IMMEDIATELY BE BROUGHT TO THE ATTENTION OF THE ENGINEER IN WRITING THROUGH THE FORMAL RFI PROCESS.

4. REFER TO THE ASSOCIATED SCHEDULES, SCHEMATICS, DRAWINGS, AND SPECIFICATIONS FOR DETAILED INFORMATION/ REQUIREMENTS ON THIS PRODUCT/ SYSTEM.

5. THE CONTRACTOR SHALL BE RESPONSIBLE TO COORDINATE ATS SHORT CIRCUIT WITHSTAND REQUIREMENTS WITH SWITCHGEAR, GENERATOR AND ATS MFGR. PROVIDE ATS MANUFACTURER-APPROVED CURRENT LIMITING CIRCUIT BREAKER(S) TO PROTECT EACH ATS AS REQUIRED. IF CONTRACTOR ELECTS TO INCREASE ATS AMPACITY TO MEET SHORT CIRCUIT WITHSTAND REQUIREMENTS, CONTRACTOR SHALL ENSURE ATS(S) WILL FIT IN SPACE DESIGNATED FOR ATS(S) PER PLANS.

ATS SYSTEM SPECIFICATIONS:

1. ALL EQUIPMENT SHALL BE NEW, OF CURRENT DESIGN, AND SHALL BE CONSTRUCTED IN ACCORDANCE WITH THE APPLICABLE REQUIREMENTS OF IEEE, NEMA, UL, ANSI AS WELL AS LOCAL JURISDICTION REQUIREMENTS. ALL EQUIPMENT SHALL BE FACTORY ASSEMBLED AND TESTED. THE FOLLOWING DOCUMENTS SHALL APPLY TO THE MANUFACTURING AND INSTALLATION OF THE ATS SYSTEM:

- NEMA ICS 1- GENERAL STANDARDS FOR INDUSTRIAL CONTROLS
- NEMA ICS 52- STANDARDS FOR INDUSTRIAL CONTROL DEVICES
- NEMA ICS 56- ENCLOSURES FOR INDUSTRIAL CONTROLS & SYSTEMS
- IEEE C62.41 / IEEE 587 SURGE TESTING
- NFPA 99 STANDARDS FOR HEALTH CARE FACILITIES
- NFPA 110 EMERGENCY/STANDBY SYSTEMS
- NFPA 37 INSTALLATION AND USE
- UL 1008 AUTOMATIC TRANSFER SWITCHES
- SPECIAL SEISMIC CERTIFICATION - CA OSHPD OSP CERTIFICATION SHALL BE PROVIDED AS EVIDENCE OF COMPLIANCE.

2. ALL PRODUCTS SHALL BE WARRANTED AGAINST DEFECTS IN MATERIAL AND WORKMANSHIP FOR TWO YEARS FROM START-UP INCLUDING PARTS, LABOR AND TRAVEL EXPENSES.

3. AUTOMATIC TRANSFER SWITCH SHALL BE A 4-POLE 600 VOLT CLASS, CONTACTOR TYPE, OVER-CENTER MECHANISM, DOUBLE-THROW CONSTRUCTION, POSITIVE ELECTRICALLY AND MECHANICALLY HELD IN BOTH NORMAL AND EMERGENCY POSITIONS. TRANSFER SWITCHES WITH INTERLOCKED CIRCUIT BREAKERS OR MOLDED CASE SWITCHES ARE NOT ACCEPTABLE. 3-POLE TRANSFER SWITCHES ARE NOT ACCEPTABLE.

THE TRANSFER SWITCH SHALL HAVE THE FOLLOWING CHARACTERISTICS:

- FULL LOAD MANUAL TRANSFER CAPABILITIES.
- ALL CONTACTS SHALL BE 600V HIGH PRESSURE, SILVER ALLOY TYPE WITH SEPARATE ARCING CONTACTS. ALL CONTACTS SHALL BE SIMULTANEOUSLY SWITCHED.
- ALL LUGS SHALL BE FULL RATED.
- PROGRAM TRANSITION SWITCHING SCHEME. IN-PHASE MONITOR SWITCHING SCHEMES AREUNACCEPTABLE.

4. ATS DISTRIBUTED CONTROLS SHALL BE FACTORY INSTALLED IN THE ATS CABINET, AND SHALL ALLOW FOR START, STOP AND LOAD SHED FUNCTIONS. WHEN A FIBER OPTIC NETWORK IS INDICATED, PROVIDE CONTACTS TO COMMUNICATE POWER SUPPLY LOW VOLTAGE AND FAILURE CONDITIONS AT THE GENERATOR ANNUNCIATOR PANEL.

5. ATS AUTOMATIC CONTROLS SHALL BE FACTORY INSTALLED IN THE ATS CABINET. ALL SENSORS AND TIME DELAYS SHALL BE SOLID STATE. ALL SENSORS SHALL MONITOR EACH PHASE OF BOTH NORMAL AND GENERATOR SOURCES. POWER FOR TRANSFER AND RE-TRANSFER SHALL BE OBTAINED FROM THE LOAD SOURCE BEING TRANSFERRED TO.

6. PROVIDE THE FOLLOWING TIME DELAYS AND COMPONENTS: START DELAY (SET TO 0.5 SECONDS), TRANSFER TO EMERGENCY DELAY (SET TO 0 SECONDS), RETRANSFER TO NORMAL DELAY (SET TO 10 MINUTES), KEY OPERATED RETRANSFER DELAY BYPASS, COOL DOWN DELAY (SET TO 5 MINUTES), NEUTRAL POSITION DELAY - BOTH DIRECTIONS (ISOLATING INDUCTIVE LOADS FROM BOTH SOURCES, SET TO 5 SECONDS), TEST SWITCH, PILOT LIGHTS FOR POSITION AND SOURCE AUXILIARY CONTACTS FOR BOTH SOURCES, LOAD SHED CONTROL FOR AUTOMATIC SELECTIVE LOAD PICK-UP AND LOAD SHED, EXERCISER CLOCK.

7. WHERE AN UPSTREAM STANDBY TRANSFER SWITCH SUPPLIES THE UTILITY/NORMAL POWER INPUT TO DOWNSTREAM EMERGENCY OR STANDBY TRANSFER SWITCH(ES), ADDITIONAL CONTROLS/RELAYS SHALL BE PROVIDED TO:

A. ACCOMPLISH AUTOMATIC LOAD SHEDDING OF THE UPSTREAM STANDBY TRANSFER SWITCH.

B. INHIBIT NUISANCE TRANSFERS BY DOWNSTREAM EMERGENCY AND/OR STANDBY TRANSFER SWITCH UPON LOSS OF UTILITY POWER PER THE FOLLOWING.

- AUTOMATIC LOAD SHED OF AN UPSTREAM STANDBY TRANSFER SWITCH SHALL BE ACCOMPLISHED WITH INSTALLATION OF FACTORY-INSTALLED LATCHING AND TIME DELAY RELAYS AS REQUIRED. GENSET OVERLOAD/LOAD SHED CONTACT CLOSURE SHALL CAUSE LATCHING RELAY TO LATCH UPSTREAM STANDBY TRANSFER SWITCH LOAD SHED CONTACT CLOSED CAUSING THE TRANSFER SWITCH TO MOVE INTO THE NEUTRAL POSITION AND ILLUMINATE "GENSET OVERLOAD" LAMP ON THE FACE OF THE TRANSFER SWITCH.

- REMOVAL OF OVERLOAD CONDITION/OPENING OF THE GENERATOR OVERLOAD/LOAD SHED CONTACT BY SUCH MEANS AS AUTOMATIC SHUTDOWN OF OWNER-DEFINED, NON-ESSENTIAL LOADS VIA BUILDING MANAGEMENT SYSTEM SCHEME OR SHUNT TRIP CIRCUIT BREAKER SCHEME, SHALL CAUSE THE UPSTREAM STANDBY TRANSFER SWITCH LATCHING RELAY TO UNLATCH, OPENING THE LOAD SHED CONTACT, AND ALLOW THE TRANSFER SWITCH TO REENGAGE WITH THE GENERATOR SOURCE.

- WHERE AN AUTOMATIC SHUTDOWN SCHEME AS DESCRIBED ABOVE IS UNAVAILABLE OR FAILS TO CLEAR AN OVERLOAD CONDITION WITHIN 10 SECONDS (ADJUSTABLE TO FROM 0-15 SECONDS), MANUAL INTERVENTION SHALL BE REQUIRED TO RE-ENGAGE THE UPSTREAM STANDBY TRANSFER SWITCH WITH THE GENERATOR SOURCE. UPON CLEARING THE GENERATOR OVERLOAD CONDITION VIA MANUAL MEANS, AN OPERATOR SHALL BE REQUIRED TO PUSH AN "OVERLOAD CLEARED" BUTTON ON THE FRONT OF THE UPSTREAM STANDBY TRANSFER SWITCH PRIOR TO THE LATCHING RELAY BEING UNLATCHED AND THE TRANSFER SWITCH RE-ENGAGING WITH THE GENERATOR SOURCE.

- TO PREVENT NUISANCE TRANSFERS OF DOWNSTREAM EMERGENCY AND/OR TRANSFER SWITCH(ES) LOCATED ON THE LOAD SIDE OF THE UPSTREAM STANDBY TRANSFER SWITCH, CONNECT UPSTREAM STANDBY TRANSFER SWITCH CLOSED-IN-EMERGENCY AUX CONTACT TO AN INHIBIT TRANSFER RELAY EACH DOWNSTREAM EMERGENCY AND/OR STANDBY TRANSFER SWITCH SUCH THAT WHEN UPSTREAM STANDBY TRANSFER SWITCH IS FED VIA GENSET SOURCE, DOWNSTREAM TRANSFER SWITCH(ES) DOES NOT TRANSFER BACK TO THEIR UTILITY/NORMAL SOURCE UNTIL THE UPSTREAM STANDBY TRANSFER SWITCH RETURNS TO ITS NORMAL SOURCE.

8. WHEN THE ATS SCHEDULE INDICATES AN ATS TO BE PART OF A "DESIGNATED SEISMIC SYSTEM," THE ATS SHALL BE SEISMICALLY CERTIFIED ASSUMING A COMPONENT IMPORTANCE FACTOR, I_p = 1.5). SEE STRUCTURAL PLANS FOR SITE SPECIFIC S_s VALUES AND ADDITIONAL SEISMIC DESIGN CRITERIA. WHERE STRUCTURAL PLANS ARE UNAVAILABLE, CONTRACTOR SHALL RETAIN THE SERVICES OF A STRUCTURAL ENGINEER LICENSED IN THE STATE IN WHICH THE PROJECT OCCURS TO PROVIDE/VALIDATE SITE SPECIFIC SEISMIC DESIGN CRITERIA USING USGS US SEISMIC DESIGN MAP TOOLS OR OTHER INDUSTRY RECOGNIZED MAPPING TOOLS AS REQUIRED. WHERE SOIL CONDITIONS ARE UNKNOWN, USE CONDITIONS THAT RESULT IN THE HIGHEST FOR THE PROJECT LOCATION. ADDITIONALLY, INCLUDE ALL COSTS IN BASE BID ASSOCIATED WITH PROVIDING SPECIAL SEISMIC CERTIFICATION AND SPECIAL PERIODIC INSPECTIONS PER IBC, OR CBC WHERE ADOPTED, CHAPTER 17. SEE ELECTRICAL SPECIFICATIONS FOR ADDITIONAL REQUIREMENTS.

SPECIAL SEISMIC CERTIFICATION SHALL BE PROVIDED BY THE ATS MANUFACTURER/VENDOR VIA 3RD PARTY ACCREDITED LISTING AGENCY'S CERTIFICATE OF COMPLIANCE. CERTIFICATION SHALL BE BASED ON TESTING - NOT ANALYSIS. THIS SPECIFICATION FURTHER REQUIRES ALL ATS(s) RECEIVE A STATE OF CALIFORNIA OFFICE OF STATEWIDE PLANNING AND DEVELOPMENT (OSHPD) SPECIAL SEISMIC CERTIFICATION PRE-APPROVAL (OSP) REGARDLESS OF INTENDED USE AND/OR LOCATION OF PROJECT.

THE CONTRACTOR SHALL BE RESPONSIBLE FOR THE DESIGN AND INSTALLATION OF SEISMIC RESTRAINT / ATTACHMENT SYSTEMS VIA LICENSED STRUCTURAL ENGINEER IN THE STATE IN WHICH THE PROJECT OCCURS.

9. THE "NEMA/MNTG" COLUMN INDICATES THE NEMA RATED ENCLOSURE TYPE AS WELL AS THE MOUNTING METHOD:

"1" - INDICATES AN INDOOR TYPE.

"3" - INDICATES A NEMA 3R, OUTDOOR TYPE WITH VENTILATED OPENINGS AND BRODENT/TAMPER SCREENS.

"F" - INDICATES FLOOR MOUNTED. SMALLER TRANSFER SWITCHES MAY BE WALL-MOUNTED OR MOUNTED ON A UNI-STRUT FRAME SYSTEM IF MANUFACTURED TO BE MOUNTED IN THIS MANNER.

"L" - INDICATES TRANSFER SWITCH IS TO BE INTEGRATED INTO A SWITCHGEAR/ SWITCHBOARD LINE-UP. PROVIDE NECESSARY SIDE AND/OR REAR WIREWAYS AS REQUIRED. CONTRACTOR IS RESPONSIBLE FOR ALL COORDINATION EFFORTS BETWEEN ATS VENDOR AND SWITCHGEAR/ SWITCHBOARD VENDOR.

"RF" - INDICATES RAISED FLOOR MOUNTING WHICH REQUIRES A CUSTOM MOUNTING FRAME SUCH
THAT THE RAISED FLOOR DOES NOT SUPPORT THE TRANSFER SWITCH. SUGGESTED SOURCE: MASON WEST INC (www.masonwest.com)

10. WHEN BYPASS ISOLATION TYPE TRANSFER SWITCHES ARE INDICATED IN THE ATS SCHEDULE, THE FOLLOWING CONDITIONS SHALL BE MET:

- BYPASS ISOLATION AND TRANSFER SWITCH SHALL BE IN A FACTORY ASSEMBLED ENCLOSURE.
- SWITCHES REQUIRING ELECTRICAL OPERATION ARE NOT ACCEPTABLE.
- NORMAL, TEST, AND FULLY ISOLATED SWITCH POSITIONS SHALL MAINTAIN CONTINUOUS FULLY RATED OPERATION.
- SWITCH SHALL BE CAPABLE OF BY-PASSING TO EITHER SOURCE.
- AUTOMATIC, SOLENOID PER THE GENERAL SPECIFICATIONS REQUIREMENTS ACTIVATED MECHANICAL STOPS SHALL BE PROVIDED TO PREVENT DEAD SOURCE BYPASS.

11. WHEN THE ATS SCHEDULE INDICATES A "NETWORK" OPTION, ONE OR MORE OF THE FOLLOWING SHALL BE PROVIDED:

"COPPER" - GENERATOR-TO-ATS COMMUNICATIONS SYSTEM VIA COPPER CONDUCTORS IN CONDUIT AS REQUIRED.

"FIBER" - GENERATOR-TO-ATS COMMUNICATIONS SYSTEM VIA FIBER OPTICS IN CONDUIT AS REQUIRED. FIBER OPTICS SHALL BE INSTALLED, TERMINATED AND OTDR-TESTED PER EIA/TIA STANDARDS BY INSTALLERS CERTIFIED BY FIBER OPTIC CABLING MANUFACTURER. PROVIDE ALL NECESSARY FIBER-TO-COPPER TRANSCEIVERS, PATCH CABLES, PATCH PANELS, ETC., FOR A COMPLETE AND USEABLE SYSTEM TO INCLUDE SUITABLE BATTERY BACK-UP POWER SOURCE POWER TO ALLOW TRANSCEIVERS TO FUNCTION DURING A POWER OUTAGE.

12. WHEN THE ATS SCHEDULE INDICATES A "COMMUNICATION" OPTION, ONE OR MORE OF THE FOLLOWING SHALL BE PROVIDED:

"SNMP" - PROVIDE SNMP OUTPUT/ INTERFACE DEVICE WITH ATS SYSTEM EQUIPMENT WHICH PROVIDES SUPPORT OF SNMP TO INTERFACE WITH ATS MANUFACTURER HTML WEB BROWSER SERVER SOFTWARE AND/OR FOR INTEGRATION INTO OWNER MANAGEMENT SYSTEM SOFTWARE AS REQUIRED. MONITORING PARAMETERS SHALL BE, AT MINIMUM, AS FOLLOWS:

- NORMAL, OPEN, OR EMERGENCY SWITCH POSITION
- NORMAL SOURCE AVAILABLE
- EMERGENCY SOURCE AVAILABLE
- TEST MODE STATUS
- ENGINE START TIMER SETTING
- RETRANSFER-TO-NORMAL TIME DELAY SETTING
- TRANSFER-TO-EMERGENCY TIME DELAY
- NEUTRAL POSITION DELAY TIMER SETTING
- LOAD SHED STATUS
- ATS CONTROLLER FAULT (M)
- SWITCH NOT-IN-AUTO
- SOURCE VOLTAGE/FREQUENCY
- TIME IN EMERGENCY
- NUMBER OF TRANSFERS
- BYPASS HANDLE POSITION (AUTO, NORMAL, EMERGENCY)
- ISOLATION HANDLE POSITION (CLOSED, TEST, OPEN)

ADDITIONALLY, SOFTWARE SHALL PROVIDE EVENT LOGGING AND TRENDING FEATURES. WHEN INTEGRATING WITH OWNER MANAGEMENT SYSTEM SOFTWARE, PROVIDE POWER SYSTEM PROTOCOL POINT ID/REGISTERS/BITMAPS FOR USE BY OTHERS TO ENABLE REPORTING/MONITORING OF ATS EQUIPMENT OPERATING PARAMETERS.

"BMS" - PROVIDE POINT ID/REGISTERS/BITMAPS FOR USE BY CONTROLS/BMS/MECHANICAL CONTRACTOR TO ENABLE REPORTING/MONITORING/ADJUSTING OF ATS SYSTEM EQUIPMENT OPERATING PARAMETERS AND STATUS TO (BUILDING MANAGEMENT SYSTEM) BMS VIA BMS GATEWAY INTERFACE DEVICE AND OTHER REQUIRED ACCESSORIES (DRY CONTACTS, INTERFACE DEVICE, RS-485/ETHERNET CONVERTERS, RS-232/RS-485, ETC.). MONITORING PARAMETERS FOR THE BMS SYSTEM SHALL BE, AT MINIMUM, THE SAME POINTS MONITORED IN THE "SNMP" SECTION ABOVE. SEE BMS DRAWINGS AND SPECIFICATIONS FOR ADDITIONAL REQUIREMENTS SUCH AS PROTOCOL COMPATIBILITY (MODBUS, BACNET, LONWORKS, ETC.). THE E.C. SHALL INCLUDE ALL COSTS IN THE BASE BID TO INTEGRATE THE ITEMS UNDER DIVISION 16 WITH THE BMS SYSTEM WHICH INCLUDES, BUT IS NOT LIMITED TO, COMMUNICATIONS INTERFACE MODULES; DRY CONTACTS ETC., ALONG WITH POINT ID LISTS/REGISTERS, BITMAPS AND/OR CAD FILES OF EACH PIECE OF ELECTRICAL EQUIPMENT (PLAN VIEW AND ELEVATION VIEW), COSTS FOR THE DEVELOPMENT OF A SOFTWARE DRIVER AND ASSOCIATED HARDWARE TO INTEGRATE WITH THE BMS, AND MAN-HOURS AS NECESSARY TO ASSIST THE BMS CONTRACTOR IN COMMISSIONING THE BMS SYSTEM AS IT RELATES TO THE DIVISION 16 ITEMS WITH WHICH IT COMMUNICATES.

13. SHOP DRAWING INFORMATION SHALL BE PROVIDED SHOWING COMPLIANCE WITH THE ABOVE SPECIFICATION PER GENERAL SPECIFICATION REQUIREMENTS. INCLUDE ALL REQUIRED NETWORK WIRING DIAGRAMS, COMPONENTS, ETC. IN ADDITION:

a. CONTRACTOR SHALL PROVIDE 1/4"= 1'-0" SCALE DRAWINGS WITH ATS SUBMITTALS SHOWING THAT ALL PROPOSED EQUIPMENT WILL FIT IN THE SPACE PROVIDED. DRAWING SHALL INCLUDE FRONT AND, IF REQUIRED, SIDE CLEARANCES FOR THE TRANSFER SWITCH EQUIPMENT IN RELATION TO OTHER OBJECTS WITHIN THE ROOM OR YARD, ETC. SUBMITTALS WITHOUT THESE DRAWING SHALL BE REJECTED AS INCOMPLETE.

b. A POWER SYSTEMS STUDY, IF REQUIRED ELSEWHERE IN THESE PLANS AND SPECIFICATIONS, SHALL BE SUBMITTED IN CONJUNCTION WITH OR PRIOR TO THE TRANSFER SWITCH SUBMITTAL. SUBMITTALS MADE WITHOUT THE REQUIRED POWER SYSTEMS STUDY SHALL BE REJECTED AS INCOMPLETE.

14. FINAL INSTALLATION SHALL BE TESTED AND APPROVED BY THE MANUFACTURER'S FACTORY TRAINED TECHNICIAN. TEST TO INCLUDE LOAD BANK AND ATS TRANSFER TEST.

15. ATS SYSTEM SHALL BE PROVIDED AND WARRANTED BY THE GENERATOR SYSTEM EQUIPMENT
MANUFACTURER. SEE GENERATOR SPECIFICATIONS FOR MORE INFORMATION.

16. THE ATS SYSTEM SHALL BE AS MANUFACTURED BY BY CUMMINS OR EQUAL BY GE/ZENITH, ASCO OR RUSSELECTRIC. WHERE SYSTEM DESIGN BASIS IS INDICATED IN ATS SCHEDULE, ALTERNATE PRODUCT MANUFACTURERS LISTED MAY REQUIRE ADDITIONAL SPACE, ROOM RECONFIGURATION, ELECTRICAL INFRASTRUCTURE ETC. ANY ADDITIONAL COST, INCLUDING RE DESIGN / DOCUMENTATION COSTS, FOR SUCH ITEMS SHALL BE INCLUDED IN BASE BID.

IDENTIFICATION STAMP
DIV. OF THE STATE ARCHITECT
APP: 02-118630 INC:
REVIEWED FOR
SS ☐ FLS ☐ ACS ☑
DATE: 04/13/2021

OFFICE OF THE STATE FIRE MARSHAL
APPROVED FIRE AND PANIC ONLY
Approval of this plan does not authorize or approve any omission or deviation from applicable regulations. Final approval is subject to field inspection. One set of approved plans shall be available on the project site at all times.
PERMIT NO.: 26 N 2332-CP
REVIEWED BY: LEO CATAYLO, OSFM
DATE: 4/1/2021

GENERAL SERVICES
Department of General Services
State of California
Real Estate Services Division
Project Management & Development Branch
707 Third Street, Suite 4-105
West Sacramento, California 95605

NICHOLS MELBURG & ROSSETTO
ARCHITECTS + ENGINEERS
300 Knollcrest Drive
Redding, CA. 96002
(530) 222-3300 (530) 222-3538 FAX
http://www.nmrdesign.com

Copyright © 2019
All ideas, designs, arrangements and plans indicated or represented by this drawing are owned by, and the property of, NICHOLS, MELBURG and ROSSETTO and were created, evolved and developed for use on, and in connection with, the specified project and no other sites. None of the ideas, designs, arrangements or plans shall be used by, or disclosed to any person, firm or corporation for any purpose whatsoever without the written permission of NICHOLS, MELBURG and ROSSETTO.

LICENSE STAMPS

REGISTERED PROFESSIONAL ENGINEER RAYMOND W. SWEETSER No. E15610 12/31/2021 ELECTRICAL STATE OF CALIFORNIA
Date Signed 3/25/2021

CONSULTANT
tklsc COLLABORATIVE
11870 Pierce Street, Suite 160
Riverside, California 92505
951.299.4160 www.tk1sc.com
Project Leader - Jerry Leonhardt
Electrical Lead - Reid Cordry
tk1sc Job #:2019-0228A

DRAWING STATUS
CONSTRUCTION DOCUMENTS

ISSUE

No.	Date	Description
1	10/20/2020	INITIAL PLAN REVIEW
2	01/22/2021	AGENCY RESUBMITTAL
3	03/22/2021	AGENCY RESUBMITTAL

If drawing is not 30" x 42" it is a reduced print

PROJECT
RESIDENTIAL CENTER, UKIAH: REPLACEMENT OF EXISTING RESIDENTIAL CENTER
440 EAST HILL ROAD
WILLITS, CALIFORNIA 95490
MENDOCINO COUNTY
CALIFORNIA CONSERVATION CORP

Supervisor	Designed	Drawn
		Author

DSA Application No.
02-118630

SHEET TITLE
ATS SCHEDULE

DGS Project Number: 0000000000001826
NMR Project Number: 18-6456

Reference North: NORTH
Sheet Scale: 12" = 1'-0"
Sheet Number: E405

ISSUE DATE
July 9, 2021

Plot Date: 3/22/2021 8:59:53 AM
File Name: BIM 360://CCC Willits Residential Center/E_CCC Willits_COMMON_2019-0228A.rvt

IDENTIFICATION STAMP
DIV. OF THE STATE ARCHITECT
APP: 02-118630 INC:
REVIEWED FOR
SS ☐ FLS ☐ ACS ☑
DATE: 04/13/2021

SPD SYSTEM SCHEDULE

NAME	USE	MOUNTING	MAX. SURGE CAPACITY PER MODE	NEMA RATING	CIRCUIT BREAKER DISCONNECT SIZE	SPD FEEDER CONDUIT SIZE	CONDUCTOR SIZES				MAX. DIMENSIONS (IN)			MANUFACTURER MODEL LISTING
							PHASE	NEUTRAL	E.G.	TRANSIENT GROUND	H	W	D	
SPD-C	MAIN SERVICE	INTEGRAL	300,000A	1	30A	3/4"C.	#10	#10	(1) #10	(1) #10 I.G.	38	22	12	APT #XAS SERIES, CURRENT TECHNOLOGIES #TG300 SERIES, LIEBERT #560 SERIES, EATON #SPD-300 SERIES, OR EQUAL BY GE TRANQUELL #TPHE....30WMN12S SERIES

POWER SYSTEMS STUDY SPECIFICATIONS:

THE CONTRACTOR SHALL PROVIDE, WITH THE ASSISTANCE OF THE SWITCHGEAR MANUFACTURER, POWER SYSTEMS STUDIES CONSISTING OF A SHORT CIRCUIT STUDY, A COORDINATION STUDY, AND AN ARC FLASH STUDY - ALL PER LATEST PUBLISHED EDITIONS OF THE FOLLOWING STANDARDS: ANSI C37, IEEE 141, IEEE 242, IEEE 399 - BROWN BOOK, NFPA 70E AND IEEE STD 1584/1584a. ADDITIONALLY:

a. CONTRACTOR SHALL PERFORM STUDY USING SKM "SYSTEMS ANALYSIS POWER TOOLS FOR WINDOWS" COMPUTER SOFTWARE PROGRAM - LATEST AVAILABLE VERSION.

b. CONTRACTOR SHALL FURNISH/OBTAIN ALL DATA REQUIRED FOR POWER SYSTEMS STUDIES. DATA COLLECTION EFFORT SHALL BE PERFORMED IN AN EXPEDITIOUS MANNER AND AS SOON AS POSSIBLE AFTER CONTRACT AWARD TO ENSURE STUDY COMPLETION FORSUBMISSION AS PART OF THE ELECTRICAL DISTRIBUTION EQUIPMENT SHOP DRAWINGS AND SUBMITTALS. DATA COLLECTION EFFORTS MAY INCLUDE, BUT ARE NOT LIMITED TO, CALCULATED UTILITY COMPANY FAULT VALUES, SERVICE TRANSFORMER PRIMARY PROTECTIVE DEVICE AND APPLIED VOLTAGE, ELECTRICAL CHARACTERISTICS AND FAULT CONTRIBUTION FROM EXISTING MOTORS/ GENERATORS, EXISTING CONDUCTOR QUANTITIES, SIZE AND LENGTHS, EXISTING/ NEW OVERCURRENT PROTECTIVE DEVICE SPECIFICATIONS AND PART NUMBERS, TRANSFER SWITCH CHARACTERISTICS AND SHORT CIRCUIT CURRENT RATINGS IN ADDITION TO ANY OTHER DATA REQUIRED TO PERFORM COMPREHENSIVE POWER SYSTEM STUDIES. RANGES OF FAULT CURRENT VALUES OR GENERIC FAULT CURRENT VALUES PROVIDED BY THE UTILITY COMPANY ARE UNACCEPTABLE AS ARE ANY FAULT CURRENT VALUES SHOWN ON THE SINGLE LINE DIAGRAM OR FEEDER SCHEDULE.

DATA GATHERING SHALL BE CONDUCTED IN A SAFE MANNER WITH 1) EQUIPMENT COMPLETELY DE-ENGERIZED IN COORDINATION WITH THE OWNER DURING A SCHEDULED POWER SHUTDOWN OR 2) UTILIZING A LICENSED ELECTRICIAN WEARING APPROPRIATE PERSONNEL PROTECTIVE EQUIPMENT PER NFPA 70E STANDARDS.

CONTRACTOR IS SOLELY RESPONSIBLE FOR OBTAINING UTILITY DATA FROM THE UTILITY COMPANY - INCLUDE ALL COSTS IN BASE BID FOR ANY UTILITY COMPANY FEES FOR PROVIDING NECESSARY DATA. WHERE THE PROJECT IS LOCATED ON A CAMPUS WITH AN OWNER-FURNISHED ELECTRICAL DISTRIBUTION SYSTEM, CONTRACTOR SHALL BE RESPONSIBLE TO OBTAIN SUFFICIENT ELECTRICAL SYSTEM DATA TO DEMONSTRATE COORDINATION OF THE PROJECT'S ELECTRICAL SYSTEM WITH CAMPUS DISTRIBUTION SYSTEM. THIS DATA MAY BE AVAILABLE IN THE FORM OF AN OWNER-PROVIDED CAMPUS POWER SYSTEM STUDY. WHERE SUCH STUDIES ARE NOT AVAILABLE, THE CONTRACTOR SHALL INCLUDE ALL COSTS IN BASE BID TO PERFORM NECESSARY FIELD INVESTIGATION OF CAMPUS DISTRIBUTION SYSTEM INCLUDING CAMPUS SERVICE ENTRANCE AND SERVING UTILITY DATA AS REQUIRED TO DEMONSTRATE COORDINATION OF THE PROJECT'S ELECTRICAL SYSTEM WITH CAMPUS DISTRIBUTION SYSTEM. INCLUDE ALL COSTS FOR RECOMMENDING ADJUSTMENTS TO EXISTING CAMPUS DISTRIBUTION SYSTEM SETTINGS DISCOVERED TO BE INCORRECT. OWNER SHALL BE RESPONSIBLE TO UNDERTAKE ANY PHYSICAL ADJUSTMENTS TO EXISTING MEDIUM OR HIGH VOLTAGE DISTRIBUTION EQUIPMENT WITH THE EXCEPTION OF FUSES, RELAYS OR OTHER CIRCUIT PROTECTIVE DEVICES LOCATED IN EXISTING DISTRIBUTION EQUIPMENT THAT ARE DEDICATED TO SERVE ONLY THIS PROJECT'S ELECTRICAL SYSTEM.

CONTRACTOR IS SOLELY RESPONSIBLE FOR OBTAINING EQUIPMENT SCCR RATING FROM ALL OTHER PROJECT TRADES AND FOR ANY OWNER-FURNISHED OR TENANT-FURNISHED EQUIPMENT CONNECTED TO THE ELECTRICAL SYSTEM IN ORDER TO VALIDATE AVAILABLE FAULT CURRENT AT THE EQUIPMENT CONNECTIONS IS LESS THAN THE RESPECTIVE EQUIPMENT SCCR.

c. THE SHORT CIRCUIT STUDY SHALL INCLUDE CALCULATED SHORT-CIRCUIT MOMENTARY AND INTERRUPTING DUTIES FOR 3-PHASE BOLTED FAULTS AND LINE-TO-GROUND FAULTS THROUGHOUT THE SINGLE LINE TO INCLUDE UTILITY SERVICE SUPPLY, GENERATORS AND TRANSFER SWITCHES, SUBSTATIONS, SWITCHGEAR, PANEL BOARDS ETC. STUDY SHALL EVALUATE ALL ELECTRICAL DISTRIBUTION EQUIPMENT AND PROTECTIVE DEVICES AGAINST SHORT CIRCUIT CURRENT RATINGS. THIS STUDY EFFORT SHALL EXTEND TO SCCR RATINGS OF EQUIPMENT, EQUIPMENT CONTROL PANELS, VARIABLE FREQUENCY DRIVES ETC PROVIDED BY OTHER TRADES THAT ARE CONNECTED TO THE ELECTRICAL SYSTEM. NOTE ANY EXISTING CIRCUIT PROTECTIVE DEVICE(S)/ELECTRICAL DISTRIBUTION THAT IS INADEQUATELY RATED TO WITHSTAND CALCULATED FAULT VALUES OR WHERE EQUIPMENT SCCR IS EXCEEDED. WHERE THE UTILITY COMPANY PROVIDES MULTIPLE FAULT CURRENT VALUES REFLECTING INITIAL TRANSFORMER CAPACITY AND WORST CASE TRANSFORMER CAPACITY, THE CONTRACTOR SHALL PROVIDE SHORT CIRCUIT ANALYSIS PRIMARILY BASED ON WORST CASE TRANSFORMER CAPACITY. ALL SERVICE EQUIPMENT SHALL BE LABELED WITH THE MAXIMUM AVAILABLE FAULT CURRENT AND FAULT CURRENT CALCULATION DATE PER NEC (OR CEC WHERE ADOPTED) 110.24. SEE LABELING SPECIFICATION FOR ADDITIONAL REQUIREMENTS.
N DATE PER NEC (OR CEC WHERE ADOPTED) 110.24. SEE LABELLING SPECIFICATION FOR ADDITIONAL REQUIREMENTS.

d. THE COORDINATION STUDY SHALL INCLUDE TIME-CURRENT CURVES (TCC) FOR OVER CURRENT PROTECTIVE DEVICES (OCPDs) ALONG WITH TRANSFORMER FULL-LOAD CURRENT, INRUSH CURRENT, AND THROUGH-FAULT PROTECTION CURVES, CONDUCTOR DAMAGE CURVES, GROUND FAULT PROTECTIVE DEVICE CURVES, MOTOR STARTING CURVE(S)/DAMAGE POINT(S), GENERATOR SHORT-CIRCUIT CURVE(S) /DAMAGE POINT(S) ETC. - CLEARLY IDENTIFIED AND PLOTTED ON LOG-LOG SCALE GRAPH(S). TCC GRAPH(S) SHALL INCLUDE A ONE-LINE DIAGRAM IDENTIFYING THE SPECIFIC PORTION COVERED BY THE GRAPH. DEMONSTRATE THAT ADEQUATE CLEARING TIME/SELECTIVE OPERATION EXISTS BETWEEN PROTECTIVE DEVICES WHILE PROVIDING PROPER SYSTEM PROTECTION & COORDINATION. STUDY SHALL INCLUDE ALL MAIN AND FEEDER OCPDs INCLUDING SECONDARY SIDE OF EACH TRANSFORMER DOWN TO BREAKERS IN PANEL BOARDS AND INDIVIDUAL BREAKERS IN DISTRIBUTION BOARDS. IN ALL CASES, SOLID STATE AND/OR ADJUSTABLE OCPDs SHALL BE ANALYZED WITH UPSTREAM AND DOWNSTREAM OCPDs AS REQUIRED TO ESTABLISH PROPER COORDINATION SETTINGS. SPECIAL EMPHASIS SHALL BE PLACED ON ANALYZING PORTIONS OF THE ELECTRICAL SYSTEM REQUIRING SELECTIVE COORDINATION WHICH INCLUDE, BUT ARE NOT LIMITED TO, NEC (OR CEC WHERE ADOPTED) ARTICLES 517, 620, 700, 701 & 708; ALONG WITH ANY ARTICLE 702 OPTIONAL STANDBY SYSTEMS SERVING SERVER ROOMS/DATA CENTERS OR OTHER AREAS REQUIRING HIGH AVAILABILITY/PROPER COORDINATION SUCH AS MANUFACTURING, CLEAN ROOM OR LAB FACILITIES. CONTRACTOR SHALL BE RESPONSIBLE TO RECOMMEND SETTINGS OF ALL DEVICES, TO INCLUDE GROUND FAULT SETTINGS, TO ACHIEVE SYSTEM COORDINATION. THE CONTRACTOR SHALL FIELD ADJUST NEW AND EXISTING DEVICES ACCORDINGLY UTILIZING A QUALIFIED MANUFACTURER'S REPRESENTATIVE OR A THIRD-PARTY ELECTRICAL TESTING AGENCY.

e. THE ARC FLASH ANALYSIS SHALL BE BASED ON THE INCIDENT ENERGY ANALYSIS METHOD (NFPA 70E 130.5). THE ARC FLASH ANALYSIS SHALL DETERMINE THE FLASH BOUNDARY, THE WORKING DISTANCE, THE INCIDENT ENERGY AND MINIMUM ARC RATING OF CLOTHING(CAL/CM^2) AT LOCATIONS IN THE ELECTRICAL SYSTEM WHERE WORK CAN OR MIGHT BE PERFORMED ON ENERGIZED COMPONENTS WHERE MULTIPLE SYSTEM CONFIGURATION SCENARIOS ARE POSSIBLE, THE CONFIGURATION WITH GREATEST INCIDENT ENERGY MUST BE SHOWN. DECREMENT FAULT CONTRIBUTIONS FROM MOTOR(S) AND GENERATOR(S) BASED ON INDUSTRY STANDARDS. THE CONTRACTOR SHALL MAKE RECOMMENDATIONS WITH REGARD TO SYSTEM ADJUSTMENTS OR OTHER MITIGATION MEASURES TO OPTIMIZE THE RESULTS OF THE STUDY AS IT RELATES TO SAFE AND RELIABLE ELECTRICAL SYSTEM OPERATION (E.G. OVERCURRENT DEVICE SETTINGS, WORKING DISTANCES, CURRENT LIMITING DEVICES). THIS INCLUDES MITIGATION, WHERE POSSIBLE, OF INCIDENT ENERGY LEVELS THAT EXCEED 40 CAL/CM^2. PERFORM ITERATIVE CALCULATIONS TO DEMONSTRATE EFFECTS OF OPENING PROTECTIVE DEVICES UTILIZING A VARIETY OF DIFFERENT SETTINGS TO BEST MITIGATE ARC FLASH ENERGY WHILE MAINTAINING AN ACCEPTABLE LEVEL OF SYSTEM COORDINATION. WHERE SUCH RECOMMENDATIONS COMPROMISE SELECTIVE COORDINATION SETTINGS, SO STATE IN THE ANALYSIS.

INCLUDE INCIDENT ENERGY/FLASH PROTECTION BOUNDARY CALCULATIONS FOR BOTH LINE/LOAD SIDE OF ALL SEPARATELY ENCLOSED MAIN CIRCUIT BREAKERS. ALL CALCULATIONS SHALL BE BASED ON ACTUAL OVERCURRENT DEVICE CLEARING TIMES.

f. BASED ON THE RESULTS OF THE ARC FLASH ANALYSIS, THE CONTRACTOR SHALL PRODUCE AND INSTALL A WARNING LABEL (ORANGE <40 CAL/CM2) OR DANGER LABEL (RED > 40 CAL/CM2) FOR EACH PIECE OF EQUIPMENT PER NEC (OR CEC WHERE ADOPTED) 110.16 AND IN ACCORDANCE WITH ANSI Z535.4-2007 OR LATEST PUBLISHED EDITION. THE LABEL MUST BE READABLE IN BOTH INDOOR AND OUTDOOR ENVIRONMENTS FOR AT LEAST 3 YEARS AND CONTAIN THE FOLLOWING INFORMATION: NOMINAL SYSTEM VOLTAGE, ARC HAZARD BOUNDARY (INCHES), WORKING DISTANCE (INCHES), AVAILABLE ARC FLASH INCIDENT ENERGY AT THE WORKING DISTANCE (CAL/CM^2), MINIMUM ARC RATING OF CLOTHING, EQUIPMENT/BUS NAME, DATE PREPARED, SUPPLIER'S NAME AND ADDRESS. PROVIDE LABEL AS MANUFACTURED BY BRADY OR EQUAL. PRIOR TO PLACING ARC FLASH LABELS, CONTRACTOR SHALL SET ALL PROTECTIVE DEVICE SETTINGS PER THE APPROVED COORDINATION STUDY.

g. DURING THE CONSTRUCTION PHASE OF THE PROJECT, ALL GROUND FAULT RELAYS SHALL BE SET AT THE LOWEST AVAILABLE TIME DELAY AND PICK-UP SETTINGS.

h. POWER SYSTEMS STUDIES SHALL BE SUBMITTED AS PART OF THE OVERALL SWITCHGEAR SUBMITTAL. THE RESULTS OF THE POWER SYSTEMS STUDY SHALL BE PRESENTED IN A COMPREHENSIVE REPORT THAT INCLUDES:

- REPORT SUMMARY WITH ANALYSIS METHODOLOGY, FINDINGS AND RECOMMENDATIONS
- SUMMARY OF INPUT DATA FOR UTILITY SOURCE, EQUIPMENT AND CABLES
- AVAILABLE FAULT CURRENT AT EACH EQUIPMENT LOCATION WITH COMPARISON TO EQUIPMENT RATING
- OVERCURRENT DEVICE SETTINGS (E.G. PICK-UP, TIME DELAY, CURVE), "AS FOUND" AND "AS RECOMMENDED"
- OVERCURRENT DEVICE COORDINATION CURVES INCLUDING RELATED SECTION OF THE SINGLE-LINE DIAGRAM
- COMPLETE SYSTEM SINGLE-LINE DIAGRAM FOR THE SYSTEM ANALYZED
- INCIDENT ENERGY LEVEL (CAL/CM^2) FOR EACH EQUIPMENT LOCATION, RECOMMENDED PPE AND SAMPLE ARC FLASH WARNING LABELS
- A DVD OR CD CONTAINING ELECTRONIC PROJECT FILES USED TO DEVELOP THE STUDY TO INCLUDE SKM PROJECT AND REFERENCE LIBRARY FILES. FAILURE TO SUBMIT COMPLETE STUDIES AND FILES SHALL RESULT IN THE REJECTION OF THE ENTIRE SWITCHGEAR SUBMITTAL.

i. AS A PART OF A CLOSEOUT SUBMITTAL TO BE SUBMITTED TO THE ENGINEER PRIOR TO FINAL PROJECT CONSTRUCTION OBSERVATIONS, CONTRACTOR SHALL PROVIDE PHOTOS OF ALL ADJUSTABLE CIRCUIT BREAKERS DEPICTING THEIR FINAL SETTINGS BASED ON THE POWER SYSTEMS STUDY. SUBMITTAL SHALL BE ORGANIZED WITH OCPD IDENTIFICATION, OCPD PHOTO IMAGE AND RESPECTIVE POWER SYSTEM STUDY OCPD SETTING REQUIREMENTS TO ALLOW EFFICIENT CONFIRMATION OF RECORD SETTINGS. PLEASE NOTE THAT IMAGES MAY NEED TO BE TAKEN PRIOR TO INSTALLATION OF EQUIPMENT COVERS/EQUIPMENT ENERGIZATION SINCE OCPD SETTINGS MAY BE OBSTRUCTED BY EQUIPMENT COVERS.

j. THE STUDY SHALL INCLUDE ALL PORTIONS OF ELECTRICAL SINGLE LINE DIAGRAM TO INCLUDE UPSTREAM OR DOWNSTREAM ELEMENTS THAT MAY NOT BE SHOWN INCLUDING, BUT NOT LIMITED TO, UTILITY SOURCE CONTRIBUTION, RELEVANT PORTIONS OF THE EXISTING ELECTRICAL DISTRIBUTION SYSTEM WITHIN A BUILDING AND/OR CAMPUS ELECTRICAL DISTRIBUTION SYSTEMS AS DESCRIBED ABOVE.

SPD SYSTEM SCHEMATIC:

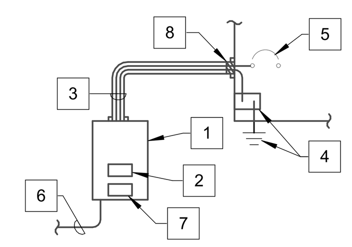

SPD SYSTEM SCHEMATIC PLAN NOTES:

1. SURGE PROTECTIVE DEVICE (SPD) SYSTEM PER SPD SCHEDULE AND SPD SYSTEM SPECIFICATIONS. SEE SINGLE LINE DIAGRAM FOR QUANTITIES AND LOCATIONS. SPD IS CURRENT/REPLACEMENT NOMENCLATURE FOR TRANSIENT VOLTAGE SURGE SUPPRESSION (TVSS). FOR THE PURPOSES OF THESE DRAWINGS, ANY LEGACY "TVSS" REFERENCE OR DEVICE(S) SHALL BE CONSIDERED TO BE THE SAME AS/REPLACEABLE BY "SPD".
2. VISUAL/AUDIBLE ALARM INDICATORS AND CONTROLS PER SPD SYSTEM SPECIFICATIONS.
3. RIGID ALUMINUM OR OTHER CODE APPROVED NONFERROUS CONDUIT (NO STEEL) WITH TRANSIENT GROUNDING CONDUCTOR AND SPD FEEDER, SIZED PER SPD SCHEDULE. WHEN USING STANDARD IMPEDANCE CONDUCTORS, LENGTHS EXPRESSLY LIMITED TO LESS THAN OR EQUAL TO 3 FEET FOR PHASE CONDUCTORS WHICH SHALL BE TWISTED AROUND GROUND CONDUCTOR AND BOUND WITH WIRE TIES AT 12" O.C. WHEN SPD FEEDER IS LONGER THAN 3 FEET, PROVIDE LOW IMPEDANCE CONDUCTOR ASSEMBLIES (CURRENT TECHNOLOGY #HPI SERIES, LIEBERT ACCUGUIDE SERIES OR EQUAL).
4. GROUNDING ELECTRODE CONDUCTOR. SEE SPD SYSTEM SPECIFICATIONS.
5. CIRCUIT BREAKER DISCONNECT PER SPD SCHEDULE. SEE SINGLE LINE DIAGRAM FOR LOCATION.
6. 1/2"C. WITH REQUIRED CONDUCTORS FROM TVSS DRY CONTACTS TO BUILDING AUTOMATION SYSTEM (BAS), IF BAS IS PROVIDED ON PROJECT. SEE MECHANICAL DRAWINGS AND SPECIFICATIONS AND SPD SPECIFICATIONS FOR MORE INFORMATION.
7. NATIONALLY RECOGNIZED TESTING LABORATORY (NTRL) CERTIFYING THAT SPD PRODUCT IS LISTED TO UL 1449 STANDARD. IT SHALL BE THE RESPONSIBILITY OF THE CONTRACTOR TO CONFIRM NTRL-ACCEPTABILITY BY THE LOCAL AHJ PRIOR TO BID.
8. CONDUIT SEALING BUSHING WITH REQUIRED NUMBER OF CONDUCTOR OPENINGS (FIELD DRILLING IS PROHIBITED).

SPD SYSTEM INSTALLATION REQUIREMENTS:

1. THE CONTRACTOR SHALL BE RESPONSIBLE FOR THE FURNISHING OF ALL MATERIAL, LABOR, EQUIPMENT, AND SERVICES, IN CONNECTION WITH THE INSTALLATION OF A COMPLETE AND FULLY FUNCTIONING AND CODE COMPLIANT INSTALLATION.

2. IT IS THE INTENT OF THE CONTRACT DOCUMENTS, WHICH ARE PRESENTED IN A DIAGRAMMATIC FORMAT, TO PROVIDE CONTRACTOR INFORMATION THAT SUPPLEMENTS AND ENHANCES THE GENERALLY ACCEPTED CONSTRUCTION MEANS, METHODS, TECHNIQUES, SEQUENCES AND PROCEDURES EMPLOYED IN CONNECTION WITH INSTALLATION OF THIS TYPE OF PRODUCT / SYSTEM.

3. THE CONTRACTOR SHALL ALSO INCORPORATE THE REQUIREMENTS OF THE MANUFACTURER'S INSTALLATION INSTRUCTIONS/WARRANTY REQUIREMENTS AS PART OF THE REQUIREMENTS OF THE CONSTRUCTION DOCUMENTS. IN THE EVENT OF A CONFLICT BETWEEN THE CONTRACT DOCUMENT REQUIREMENTS AND THE MANUFACTURER'S INSTALLATION REQUIREMENTS, THE MORE STRINGENT REQUIREMENTS SHALL APPLY - UNLESS THE MORE STRINGENT REQUIREMENT VOIDS APPLICABLE WARRANTIES OR VIOLATES THE REQUIREMENTS OF THE LOCAL AUTHORITY HAVING JURISDICTION. ANY SUCH CONFLICT SHALL IMMEDIATELY BE BROUGHT TO THE ATTENTION OF THE ENGINEER IN WRITING THROUGH THE FORMAL RFI PROCESS.

4. REFER TO THE ASSOCIATED SCHEDULES, SCHEMATICS, DRAWINGS, AND SPECIFICATIONS FOR DETAILED INFORMATION / REQUIREMENTS ON THIS PRODUCT / SYSTEM.

SPD SYSTEM SPECIFICATIONS:

1. ALL EQUIPMENT SHALL BE NEW, OF CURRENT DESIGN, AND SHALL BE CONSTRUCTED IN ACCORDANCE WITH THE APPLICABLE REQUIREMENTS OF IEEE, NEMA, UL, ANSI AS WELL AS LOCAL JURISDICTION REQUIREMENTS. ALL EQUIPMENT SHALL BE FACTORY ASSEMBLED AND TESTED. THE LATEST PUBLISHED EDITION OF THE FOLLOWING DOCUMENTS SHALL APPLY TO THE MANUFACTURING AND INSTALLATION OF THE SPD SYSTEM:

- UL 1283
- UL 1449 LATEST PUBLISHED REVISION (3RD EDITION OR LATER)
- ANSI/IEEE C62.41.1-2002 & C62.41.2-2002
- ANSI/IEEE C62.45 1992
- ANSI/IEEE C62.1 AND C62.11
- NEC (OR CEC IF ADOPTED BY AHJ) ART 280 OR 285 DEPENDING ON CODE IN FORCE.
- FIPS PUB 94
- MIL-STD-220B
- NFPA 75 AND 78
- NEC, OR CEC WHERE ADOPTED, ART. 285

2. ALL PRODUCTS SHALL BE WARRANTED BY THE E.C. AGAINST DEFECTS IN MATERIAL AND WORKMANSHIP FOR (5) YEARS FROM START UP INCLUDING PARTS, LABOR AND TRAVEL EXPENSES.

3. SPD EQUIPMENT SHALL BE A MULTI STAGE PARALLEL PROTECTOR MADE UP OF A LINEAR ARRAY OF BALANCED METAL OXIDE VARISTORS. EACH MOV SHALL BE INDIVIDUALLY FUSED. EACH PROTECTOR MODULE SHALL BE CAPABLE OF WITHSTANDING A MINIMUM OF 4,000 SEQUENTIAL 10,000 AMP ANSI/IEEE C62.41 CATEGORY C3 IMPULSES WITH LESS THAN 10% DEGRADATION OR FAILURE. SURGE CURRENT SHALL BE EQUALLY DISTRIBUTED BETWEEN PROTECTION MODULES.

4. SPD EQUIPMENT SHALL NOT EXCEED UL 1449 VOLTAGE PROTECTIVE RATINGS (VPR) WHICH ARE AS FOLLOWS:

SYSTEM VOLTAGE	L-N	L-G	L-L	N-G
208Y/120	700V	700V	1200V	700V
480Y/277	1200V	1200V	1800V	1200V

ADDITIONALLY, UL 1449 LISTED NOMINAL DISCHARGE CURRENT (L-N) SHALL BE 20KA TO ALLOW THE INSTALLATION TO BE UL96A LIGHTING PROTECTION MASTER LABEL-READY.

5. USE OF CURRENT LIMITING FUSES/THERMAL CUTOUTS/DEVICES INTERNAL OR EXTERNAL TO THE SPD IS UNACCEPTABLE UNLESS FUSE OR THERMAL CUTOUT DEVICE IS RATED AT OR ABOVE THE MAXIMUM SURGE CAPACITY PER PHASE OF THE SPD UNIT. THE CURRENT LIMITING FUSES/THERMAL CUTOUTS/DEVICES SHALL BE INCLUDED IN NATIONALLY RECOGNIZED TESTING LAB SURGE IMPULSE TESTING OF THE SPD UNIT TO INCLUDE SINGLE IMPULSE TESTING MATCHING LABEL RATING AND TESTING TO SHOW SPD UNIT SHALL SURVIVE 5,000 IMPULSES USING 10X10,000 uS WAVEFORM.

6. EACH PROTECTION MODULE SHALL BE FIELD REPLACEABLE. EACH MODULE SHALL HAVE A VISUAL INDICATOR THAT SIGNIFIES THE PROTECTION CIRCUITRY IS ONLINE. A REDUNDANT STATUS INDICATOR SHALL BE MOUNTED ON THE FRONT OF THE PANEL. EACH PROTECTION MODULE SHALL HAVE CAPACITIVE FILTERING CONNECTED IN EACH LINE TO NEUTRAL MODE (WYE) OR LINE TO LINE (DELTA) MODE.

7. EACH SPD SHALL PROVIDE LINE TO NEUTRAL, LINE TO GROUND, LINE TO LINE (DELTA SYSTEMS ONLY), AND NEUTRAL TO GROUND PROTECTION.

8. EACH SPD SHALL BE EQUIPPED WITH (1) ALARM INDICATOR FORM C DRY CONTACT (1 N.O. AND 1 N.C.) FOR REMOTE MONITORING. WHEN A BUILDING AUTOMATION SYSTEM (BAS) OR BUILDING MONITORING SYSTEM (BMS) IS PROVIDED ON THE PROJECT, THE E.C. SHALL PROVIDE CONDUIT AND WIRING NECESSARY TO CONNECT THE DRY CONTACTS TO THE NEAREST BAS OR BMS PANEL. THE E.C. SHALL COORDINATE BAS OR BMS PANEL LOCATIONS AND CONNECTION REQUIREMENTS WITH THE MECHANICAL CONTROLS CONTRACTOR PRIOR TO ROUGH-IN. WHEN A BAS SYSTEM IS NOT PROVIDED ON THE PROJECT, THE E.C. SHALL PROVIDE CONDUIT AND WIRING NECESSARY TO CONNECT THE SPD DRY CONTACTS TO THE NEAREST UPS SYSTEM. THE E.C. SHALL PROGRAM THE "CUSTOMER INTERFACE" CONTACT BOARD WITHIN THE UPS TO RECOGNIZE AND REPORT A SPD ALARM.

9. EACH SPD SHALL BE EQUIPPED WITH A LOCAL ALARM SOUNDER, ALARM TEST BUTTON, AND ALARM DISABLE SWITCH. EACH SPD SHALL BE EQUIPPED WITH A SURGE COUNTER WITH SURGE COUNTER MEMORY BACKED UP BY BATTERY.

10. EACH SPD UNIT SHALL BE LABELED WITH MAXIMUM SHORT CIRCUIT CURRENT RATING FOR THE SPD SYSTEM TO INCLUDE UL FILE # DOCUMENTING SCCR TEST RESULTS IN ADDITION TO MANUFACTURER NAME, MODEL NUMBER, PART NUMBER, AND OPERATING VOLTAGE.

11. UNLESS OTHERWISE NOTED IN THE SPD SCHEDULE, EACH SPD SHALL BE REMOTELY MOUNTED FROM THE PANEL, DISTRIBUTION BOARD OR SWITCHBOARD TO WHICH IT IS CONNECTED. WHEN INDICATED AS INTEGRAL, THE SPD SHALL BE INSTALLED INTEGRAL TO THE SWITCHBOARD, DISTRIBUTION BOARD OR PANEL BOARD AND STILL MAINTAIN THE UL LISTING OF THE SWITCHBOARD, DISTRIBUTION BOARD OR PANELBOARD TO WHICH IT IS INSTALLED. THE E.C. SHALL BEAR RESPONSIBILITY TO ENSURE THAT SWITCHBOARDS, DISTRIBUTION BOARDS, AND/OR PANELBOARDS ARE CONSTRUCTED UTILIZING SPD EQUIPMENT FROM ONE OF THE MANUFACTURER'S SPECIFIED BELOW AND SHALL INCLUDE ALL COSTS FOR THIS REQUIREMENT IN THE BASE BID. INTEGRATED SPD SHALL NOT BE DIRECT BUS CONNECTED BUT SHALL BE FED FROM A CIRCUIT BREAKER AS SIZED IN THE SPD SYSTEM SCHEDULES.

12. THE NEMA COLUMN OF THE SPD SYSTEM SCHEDULE INDICATES THE NEMA RATED ENCLOSURE TYPE. "1" INDICATES NEMA 1 INDOOR SURFACE MOUNTED TYPE. "3R" INDICATES NEMA 3R RAINTIGHT SURFACE MOUNTED TYPE. "4" INDICATES NEMA 4 WATERTIGHT SURFACE MOUNTED TYPE.

13. EACH SPD FEEDER SHALL FEED FROM A CIRCUIT BREAKER ACTING AS A DISCONNECT.

14. EACH SPD FEEDER SHALL BE SIZED PER THE SPD SYSTEM SCHEDULE AND BE LIMITED IN LENGTH TO A MAXIMUM OF (3) FEET. THE FEEDER SHALL AVOID UNNECESSARY BENDS. INDIVIDUAL BENDS SHALL BE LIMITED TO A MAXIMUM OF 45 DEGREES.

15. EACH SPD TRANSIENT GROUND CONDUCTOR SHALL BE SIZED PER THE SPD SYSTEM SCHEDULE, BE LIMITED IN LENGTH TO A MAXIMUM OF (3) FEET WITH PHASE CONDUCTORS TWISTED AROUND GROUND CONDUCTOR AND BOUND WITH WIRE TIES AT 12" O.C., AND SHALL UTILIZE ALUMINUM RIGID CONDUIT OR OTHER CODE APPROVED NONFERROUS MATERIAL.

16. EACH SPD TRANSIENT GROUND CONDUCTOR SHALL BE BONDED TO THE GROUNDING ELECTRODE CONDUCTOR, GROUNDED SERVICE CONDUCTOR, GROUNDING ELECTRODE CONDUCTOR OR EQUIPMENT GROUNDING TERMINAL WITHIN THE SERVICE EQUIPMENT. BONDS SHALL BE THE EXOTHERMIC TYPE. MECHANICAL CONNECTIONS ARE NOT ALLOWED.

17. SHOP DRAWING INFORMATION SHALL BE PROVIDED SHOWING COMPLIANCE WITH THE ABOVE SPECIFICATION PER GENERAL SPECIFICATION REQUIREMENTS TO INCLUDE ELECTRICAL ROOM LAYOUT(S) DEPICTING REMOTE SPD UNIT LOCATIONS. INCLUDE ALL REQUIRED NETWORK WIRING DIAGRAMS, COMPONENTS, ETC.

- VOLTAGE MEASUREMENTS FROM LINE-TO-GROUND, LINE-TO-NEUTRAL AND NEUTRAL-TO-GROUND AT TIME OF TEST.
- IMPULSE INJECTION TO VERIFY THE SYSTEM SUPPRESSION VOLTAGE TOLERANCES FOR ALL SUPPRESSION PATHS UNLESS SUPPRESSION STATUS IS INDICATED BY STATUS INDICATOR LIGHTS MOUNTED ON UNIT OR IN REMOTE DISPLAY PANEL.
- VISUAL INSPECTION OF NEUTRAL-GROUND BOND, SPD TRANSIENT GROUND CONDUCTOR/GROUNDING ELECTRODE CONNECTION, AND SPD FEEDER AND GROUND CONDUCTOR LENGTH.

(3) COPIES OF THE START-UP TEST RESULTS AND THE FACTORY BENCH MARK TESTING CONFIRMING PROPER SUPPRESSION SYSTEM FUNCTION SHALL BE PROVIDED TO THE OWNER'S PROJECT MANAGER.

19. SPD EQUIPMENT SHALL BE MANUFACTURED BY APT, CURRENT TECHNOLOGY, LIEBERT, G.E., SQUARE D, AND EATON. NO OTHER SUBSTITUTIONS ARE ACCEPTABLE.

OFFICE OF THE STATE FIRE MARSHAL
APPROVED FIRE AND PANIC ONLY
Approval of this plan does not authorize or approve any omission or deviation from applicable regulations. Final approval is subject to field inspection. One set of approved plans shall be available on the project site at all times.
PERMIT NO.: 20-N-2332-CP
REVIEWED BY: LITO CATAYLO, OSFM
DATE: 4/1/2021

GENERAL SERVICES
Department of General Services
State of California
Real Estate Services Division
Project Management & Development Branch
707 Third Street, Suite 4-105
West Sacramento, California 95605

NICHOLS MELBURG & ROSSETTO
ARCHITECTS + ENGINEERS
300 Knollcrest Drive
Redding, CA. 96002
(530) 222-3300 (530) 222-3538 FAX
http://www.nmrdesign.com

Copyright © 2019
All ideas, designs, arrangements and plans indicated or represented by this drawing are owned by, and the property of, NICHOLS, MELBURG and ROSSETTO and were created, evolved and developed for use on, and in conjunction with, the specified project. None of such ideas, designs, arrangements or plans shall be used by, or disclosed to any person, firm or corporation for any purpose whatsoever without the written permission of NICHOLS, MELBURG and ROSSETTO.

LICENSE STAMPS
REGISTERED PROFESSIONAL ENGINEER RAYMOND W. SWARTZ No. E15610 Ex. 12/31/2021 ELECTRICAL STATE OF CALIFORNIA
Date Signed: 3/25/2021

CONSULTANT
tk1sc COLLABORATIVE
11870 Pierce Street, Suite 160
Riverside, California 92505
951.299.4160 www.tk1sc.com
Project Leader - Jerry Leonhardt
Electrical Lead - Reid Cordry
tk1sc Job #:2019-0228A

DRAWING STATUS
CONSTRUCTION DOCUMENTS

ISSUE

No.	Date	Description
1	10/20/2020	INITIAL PLAN REVIEW
2	01/22/2021	AGENCY RESUBMITTAL
3	03/22/2021	AGENCY RESUBMITTAL

If drawing is not 30" x 42" it is a reduced print

PROJECT
RESIDENTIAL CENTER, UKIAH: REPLACEMENT OF EXISTING RESIDENTIAL CENTER
440 EAST HILL ROAD
WILLITS, CALIFORNIA 95490
MENDOCINO COUNTY
CALIFORNIA CONSERVATION CORP

Supervisor | Designed | Drawn: Author

DSA Application No.
02-118630

SHEET TITLE
SPD SCHEDULE

DGS Project Number: 000000000001826
NMR Project Number: 18-6456

Reference North: NORTH
Sheet Scale: 12" = 1'-0"
Sheet Number: E406

ISSUE DATE
July 9, 2021

Plot Date: 3/22/2021 8:59:55 AM
File Name: BIM 360://CCC Willits Residential Center/E_CCC Willits_COMMON_2019-0228A.rvt

LIGHTING FIXTURE SCHEDULE NOTES:

A. GENERAL NOTES:

1. THE LIGHTING FIXTURES, LAMPS, BALLASTS, POWER SUPPLIES, DRIVERS AND TRANSFORMERS FOR THIS PROJECT HAVE BEEN SPECIFIED TO ENSURE THAT SPECIFIC AESTHETIC AND PERFORMANCE REQUIREMENTS WILL BE SATISFIED. THESE PRODUCTS HAVE BEEN CAREFULLY RESEARCHED AND EACH SPECIFIED ITEM HAS UNIQUE QUALITIES WHICH WERE DETERMINED TO BE ESSENTIAL IN SATISFYING THE OWNER'S, ARCHITECT'S, ENGINEER'S AND LIGHTING CONSULTANT'S DESIGN CRITERIA.
2. CONTRACTOR SHALL PROVIDE ALL MATERIALS AS DETAILED ON DRAWINGS AND/OR SCHEDULES, AND LABOR AS REQUIRED TO ACHIEVE A COMPLETE AND OPERATING LIGHTING SYSTEM.
3. CONTRACTOR SHALL NOTIFY THE ELECTRICAL ENGINEER AND/OR LIGHTING CONSULTANT OF ANY PROVISIONS OF THE SPECIFICATION THAT IS IN CONFLICT WITH LOCALLY ENFORCED CODES.
4. CONTRACTOR SHALL IMMEDIATELY NOTIFY THE ARCHITECT OF ANY REQUIRED MODIFICATIONS THAT ARE NOT SHOWN ON THE DRAWINGS.
5. ALL ELECTRICAL MATERIAL SHALL BE IN NEW & UNDAMAGED CONDITION WHEN INSTALLED. ALL EQUIPMENT SHALL BE LISTED BY A NATIONALLY RECOGNIZED TESTING LABORATORY.
6. ALL DIMENSIONS & MEASUREMENTS FOUND ON PLANS ARE APPROXIMATE. CONTRACTOR SHALL VALIDATE ALL DIMENSIONS PRIOR TO ORDERING MATERIAL TO INCLUDE MAKING FIELD MEASUREMENTS BASED ON ACTUAL SITE CONDITIONS TO DEVELOP COMPLETE ORDERS AND INSTALL SYSTEMS PER DRAWINGS AND SPECIFICATIONS.
7. REFER TO ARCHITECTURAL PLANS FOR EXACT LOCATION AND ELEVATION OF ALL LIGHTING FIXTURES AND ASSOCIATED DEVICES AND EQUIPMENT.
8. PRIOR TO AIMING/ADJUSTING ACTIVITIES, COMMISSIONING OR PUNCHWALK COMMENCEMENT, CONTRACTOR SHALL PROPERLY TEST AND VERIFY ALL CIRCUITRY AND CONTROL WIRING AND IMPLEMENT ALL CONTROLS PROGRAMMING.

B. INSTALLATION:

1. LOCATIONS OF THE FIXTURES SHALL BE PER THE ARCHITECTURAL REFLECTED CEILING PLAN(S) AND SHALL BE COORDINATED AT TIME OF ROUGH IN. CONFLICTS BETWEEN THE ARCHITECTURAL REFLECTED CEILING PLAN(S) AND THE ELECTRICAL/LIGHTING DESIGN PLAN(S) SHALL BE BROUGHT TO THE ATTENTION OF THE ARCHITECT IN WRITING PRIOR TO ORDERING FIXTURES.
2. LIGHTING DRAWINGS REPRESENT THE DESIGN INTENT OF THE EQUIPMENT, DEVICES, ETC. TO BE CONNECTED AND THE CIRCUITS TO WHICH THEY ARE TO BE CONNECTED. CONTRACTOR SHALL INSTALL ALL CONDUIT, J-BOXES AND ADDITIONAL HARDWARE AND DEVICES AS REQUIRED FOR A COMPLETE AND OPERATING SYSTEM.
3. ALL LIGHTING FIXTURES SHALL BE MOUNTED AND INDIVIDUALLY SUPPORTED IN ACCORDANCE WITH APPLICABLE CODES. FIXTURES SHALL BE FURNISHED AND INSTALLED WITH ALL REQUIRED MOUNTING DEVICES, HARDWARE AND ACCESSORIES.
4. CONTRACTOR TO VERIFY LIGHTING FIXTURE MOUNTING HARDWARE IS COMPATIBLE WITH APPROVED MOUNTING CONDITIONS. MOUNTING CONDITIONS MUST ALLOW FOR AIMING AND ADJUSTING OF LIGHTING FIXTURES ON SITE.
5. CONTRACTOR TO INCLUDE AIMING/ADJUSTING LABOR AFTER DARK AS REQUIRED FOR ANY ADJUSTABLE LIGHTING FIXTURE AND FOR EACH INDIVIDUAL LIGHTING FIXTURE HEAD OR LAMP HOLDER IN A MULTI-FIXTURE/MULTI-LAMP ASSEMBLY. LIGHTING FIXTURES TO BE AIMED/ADJUSTED PER THE DIRECTION OF OWNER, ARCHITECT AND/OR LIGHTING CONSULTANT.
6. CONTRACTOR TO SUPPLY ADEQUATE SUPPORT INCLUDING LADDERS, LIFTS OR OTHER EQUIPMENT REQUIRED TO ACCESS LIGHTING FIXTURES AT THE TIME OF FOCUS, INCLUDING EVENING OR NIGHT WORK AS MAY BE REQUIRED DUE TO SCHEDULE CONFLICT OR DAYLIGHT IMPACT. AIMING/ADJUSTING LABOR SHALL BE PREPARED FOR WORK WITH COMMON HAND TOOLS TO MAKE ADJUSTMENTS AND MINOR REPAIRS DURING AIMING.
7. ALL COVE MOUNTED LIGHTING FIXTURES SHALL EXTEND THE FULL LENGTH OF THE COVE. CONTRACTOR TO FIELD MEASURE COVE LENGTH AND ORDER QUANTITY OF LIGHTING FIXTURES AS REQUIRED. PROVIDE COMPLETE MANUFACTURER SHOP DRAWINGS OF BUILT-IN COVE OR LINEAR LIGHTING SYSTEMS.
8. CONTRACTOR TO REPLACE ALL INOPERATIVE LAMPS, LED ARRAYS OR SYSTEMS AT THE END OF THE CONSTRUCTION PHASE PRIOR TO THE FOCUS AND PROGRAMMING PHASE AND AGAIN PRIOR TO OWNER OCCUPANCY OR PROJECT OPENING.
9. ALL POLE MOUNTED FIXTURES, POST MOUNTED FIXTURES AND BOLLARDS SHALL BE PROVIDED WITH A STRUCTURAL FOOTING AS DETAILED ELSEWHERE IN THE DRAWINGS. FOOTING SIZE TO BE PROVIDED BY STRUCTURAL ENGINEER. REFERENCE FIXTURE SCHEDULE AND DETAILS FOR MORE INFORMATION.
10. ALL EXIT SIGNS SHALL BE INSTALLED IN STRICT ACCORDANCE WITH THE LOCAL FIRE PREVENTION CODE AUTHORITY. THE CONTRACTOR IS RESPONSIBLE FOR PROVIDING ALL NECESSARY HARDWARE SUCH THAT ALL EXIT SIGNS ARE INSTALLED IN AN APPROVED VISIBLE LOCATION. THE CONTRACTOR SHALL VERIFY CHEVRONS AND NUMBER OF FACES PER EXIT SIGN WITH ARCHITECTURAL REFLECTED CEILING PLAN(S). ANY DISCREPANCIES BETWEEN EXIT SIGNS DEPICTED ON ARCHITECTURAL AND ELECTRICAL PLANS SHALL BE BROUGHT TO THE ATTENTION OF THE ARCHITECT PRIOR TO ORDERING EXIT SIGNS.

C. SUBMITTALS AND SUBSTITUTIONS:

1. CONTRACTOR TO SUBMIT FOR APPROVAL ON THE PRODUCTS THEY INTEND TO FURNISH WITHIN TEN (10) DAYS OF AWARD OF CONTRACT. FAILURE TO SUBMIT WITHIN DEADLINE CONSTITUTES A GUARANTEE THAT ONLY THE BASE SPECIFIED PRODUCTS WILL BE SUPPLIED AND THAT NO OTHER PRODUCTS, WHETHER LISTED AS ALTERNATES OR NOT, WILL BE CONSIDERED.
2. CONTRACTOR TO PROVIDE A SUBMITTAL/SHOP DRAWING SUBMITTAL FOR EACH LIGHTING FIXTURE TYPE INCLUDING ACCESSORIES, BALLAST(S), POWER SUPPLIES, DRIVER(S) TRANSFORMER(S), AND INTEGRAL EMERGENCY BATTERIES AND TEST SWITCHES. ANY LIGHTING FIXTURE SUBMITTAL PROVIDED WITHOUT SPECIFIC LIGHTING FIXTURE'S ACCESSORIES, BALLAST, POWER SUPPLY, DRIVER, TRANSFORMER OR BATTERY INFORMATION SHALL BE REJECTED AS INCOMPLETE.
3. SUBSTITUTIONS OF THE SPECIFIED PRODUCTS ARE STRICTLY PROHIBITED - UNLESS APPROVED AS STATED HEREIN. LIGHTING FIXTURE SUBSTITUTIONS SHALL BE FORMALLY PRESENTED TO THE ELECTRICAL ENGINEER AND/OR LIGHTING CONSULTANT, BY APPOINTMENT ONLY, AT LEAST TEN (10) WORKING DAYS PRIOR TO BID TIME. THE SUBMITTAL MATERIAL SHALL INCLUDE THE FOLLOWING ITEMS.
   a. A COMPLETE AND OPERATING SAMPLE, WIRED FOR 120V OPERATION, WITH LAMP, CORD AND PLUG .
   b. A COMPLETE PHOTOMETRIC REPORT, FOR THE PROPOSED SUBSTITUTE PRODUCT, USING THE SPECIFIED LAMP OR LED TYPE AND WATTAGE, INCLUDING TABULATED CANDLEPOWER VALUES, COEFFICIENT OF UTILIZATION, AND AN ISO-FOOT-CANDLE DIAGRAM. PRORATED DATA WILL NOT BE ACCEPTABLE. THE PHOTOMETRIC REPORT MUST BE DONE IN ACCORDANCE WITH PUBLISHED I.E.S. TESTING PROCEDURES AND CERTIFIED BY A REGISTERED ELECTRICAL ENGINEER.
   c. A CURRENT ORIGINAL CATALOG DATA SHEET WITH LIGHTING FIXTURE CATALOG NUMBERS. MODIFIED DATA SHEETS WILL NOT BE ACCEPTABLE.
   d. A SIGNED COPY OF THE "SUBSTITUTION COMPLIANCE FORM", LOCATED IN THE DIVISION 1 SPECIFICATION, STATING THAT IF THE PROPOSED SUBSTITUTION IS ACCEPTED, THE PROJECT SCHEDULE WILL NOT BE NEGATIVELY AFFECTED. IF THE COMPLETION OF THE PROJECT IS DELAYED BECAUSE OF THE APPROVED SUBSTITUTION, THE CONTRACTOR WILL BE RESPONSIBLE FOR PAYMENT OF ANY ESTABLISHED LIQUIDATED DAMAGES.
   e. FOR SPECIFIC INTERIOR FIXTURE SUBSTITUTIONS, WHEN DIRECTED BY THE ELECTRICAL ENGINEER AND/OR LIGHTING CONSULTANT, A POINT-BY-POINT SCALED COMPUTER PRINTOUT SHALL BE PROVIDED VERIFYING THE ILLUMINATION LEVELS FOR THE SPECIFIC INTERIOR AREA. IF THE SUBSTITUTED FIXTURE IS AN EMERGENCY FIXTURE, THE REPORT SHALL BE RUN IN BOTH NORMAL AND EMERGENCY MODES. THIS REPORT SHALL BE CONFIGURED WITH SPECIFIC CONSTRAINTS, AS DIRECTED BY THE ENGINEER OF RECORD. THE REPORT MUST SHOW THAT THE SUBSTITUTED FIXTURE PROVIDES PERFORMANCE EQUAL TO OR BETTER THAN THE LIGHTING LEVELS OF THE SPECIFIED PRODUCT.
   f. FOR ALL EXTERIOR FIXTURE SUBSTITUTIONS, A POINT-BY-POINT SCALED COMPUTER PRINTOUT SHALL BE PROVIDED VERIFYING THE ILLUMINATION LEVELS FOR THE ENTIRE SITE PLAN BASED ON USING THE PROPOSED ALTERNATIVE FIXTURES. THE REPORT MUST SHOW THAT THE SUBSTITUTED FIXTURE PROVIDES PERFORMANCE EQUAL TO, OR BETTER THAN THE LIGHTING LEVELS AND UNIFORMITY RATIOS (MAX:MIN AND AVG:MIN) OF THE SPECIFIED PRODUCT. THIS REPORT SHALL BE CONFIGURED WITH THE FOLLOWING CONSTRAINTS.
      i. THE SPACING INCREMENT OR POINTS ON THE VERIFICATION REPORT SHALL NOT EXCEED TEN (10) FEET IN EITHER DIRECTION.
      ii. THE PHOTOMETRIC CALCULATION SHALL BE BASED ON PROVIDING MAINTAINED FOOT-CANDLE LEVELS USING MEAN LAMP LUMENS AND A LIGHT LOSS FACTOR, AS DIRECTED BY THE ENGINEER OF RECORD.
      iii. THE PHOTOMETRIC CALCULATION SHALL SHOW ANY ADDITIONAL ENERGY AND/OR ENERGY COSTS, FOR A TEN YEAR PERIOD, AS COMPARED TO THE ORIGINALLY SPECIFIED ITEM. THE TOTAL COSTS FOR THESE EXPENSES WILL BE DEDUCTED FROM THE CONTRACT COST.
4. CONFLICTS BETWEEN CATALOG NUMBERS AND LIGHTING FIXTURE DESCRIPTIONS SHALL BE BROUGHT TO THE ATTENTION OF THE ELECTRICAL ENGINEER AND/OR LIGHTING CONSULTANT PRIOR TO BID TIME FOR CLARIFICATION.
5. FIXTURE FINISHES:
   a. ALL FIXTURE FINISHES AND COLORS, UNLESS NOTED AS CUSTOM, SHALL BE SELECTED FROM THE MANUFACTURERS STANDARD COLOR OPTIONS AS LISTED ON THE FIXTURE SPECIFICATION SHEET. STANDARD FINISH SHALL BE SELECTED BY THE ARCHITECT, INTERIOR DESIGNER OR OWNER. THIS DIRECTION WILL BE PROVIDED IN THE SHOP DRAWING REVIEW PROCESS.
   b. ALL FIXTURES INDICATED WITH A PREMIUM OR CUSTOM COLOR SHALL BE ASSIGNED A CUSTOM COLOR REFERENCE NUMBER (SUCH AS RAL#) OR PROVIDE FIVE (5) PAINT CHIPS FOR MANUFACTURER TO USE TO MATCH COLOR. PREMIUM OR CUSTOM FINISH SHALL BE SELECTED BY THE ARCHITECT, INTERIOR DESIGNER OR OWNER. THIS DIRECTION WILL BE PROVIDED IN THE SHOP DRAWING REVIEW PROCESS.
6. [OPTION?] IN THE LIGHTING FIXTURE MODEL NUMBER INDICATE A FIXTURE OPTION THAT THE CONTRACTOR MUST IDENTIFY PRIOR TO ORDERING/PROVIDING SUBMITTALS, INCLUDING, BUT NOT LIMITED TO: VOLTAGE, MOUNTING CONDITION/HARDWARE, FINISH, DIMMING REQUIREMENTS/BALLAST INFORMATION.
   a. CONTRACTOR SHALL BE RESPONSIBLE FOR VERIFYING AND PROVIDING ALL HANGERS, CLIPS AND NECESSARY HARDWARE TO INSTALL THE FIXTURE IN THE ENVIRONMENT AS SHOWN ON THE ARCHITECTURAL PLANS. ALL FIXTURES SHALL BE PROVIDED WITH ALL REQUIRED STRUCTURAL SUPPORTS AS REQUIRED BY THE CURRENTLY ADOPTED CODES.
   b. VOLTAGES SHALL BE VERIFIED BY THE CONTRACTOR PRIOR TO ORDERING - SEE ELECTRICAL DRAWINGS FOR BRANCH CIRCUIT INFORMATION. IT IS POSSIBLE THAT FIXTURES WILL BE REQUIRED IN VARIOUS VOLTAGES
7. "NO KNOWN EQUAL" LIGHTING FIXTURE PRICING/BIDDING NOTES:
   a. EACH FIXTURE IDENTIFIED AS "NO KNOWN EQUAL" ON THIS PROJECT SHALL BE BID IN A "LINE ITEM" FORMAT. A PER UNIT MATERIAL COST SHALL BE PROVIDED FOR EACH "NO KNOWN EQUAL" FIXTURE. THIS PRICE SHALL INCLUDE LAMPS AS WELL AS ALL OTHER REQUIRED MATERIALS REQUIRED FOR INSTALLATION. THE FIXTURE PRICE QUOTED WILL BE UTILIZED, PRIOR TO SHOP DRAWING APPROVAL, FOR "ADDING" AND/OR "DELETING" ANY QUANTITY OF THE FIXTURE.
   b. FAILURE TO SUBMIT A LINE ITEM FOR EACH "NO KNOWN EQUAL" FIXTURE MAY RESULT IN THE REJECTION, REFUSAL, OR NON-ACCEPTANCE OF THE CONTRACTOR'S BID.
8. FIXTURES IDENTIFIED AS "NO KNOWN EQUAL - OWNER STANDARD" OR "CAMPUS STANDARD" ARE TO BE PROVIDED AS SPECIFIED, WITH SUBSTITUTIONS STRICTLY PROHIBITED. SEE ADDITIONAL NOTES FOR "NO KNOW EQUAL" BIDDING REQUIREMENTS.

D. LIGHTING FIXTURE SPECIFICATIONS:

1. ALL EXTERIOR LIGHTING EQUIPMENT SHALL BE RATED FOR WET LOCATION AND THE IP RATING OF ALL EQUIPMENT, INCLUDING BALLAST, POWER SUPPLY AND TRANSFORMER ENCLOSURES SHALL CONFORM TO THE CONDITIONS IN WHICH THE LIGHTING FIXTURE IS MOUNTED.
2. ALL BALLASTS, POWER SUPPLIES, DRIVERS AND/OR TRANSFORMERS THAT ARE REMOTELY LOCATED SHALL BE INSTALLED AS NEAR TO THE LIGHTING FIXTURE(S) AS POSSIBLE, HIDDEN FROM PUBLIC VIEW IN AN ACCESSIBLE COMPARTMENT THAT IS WELL VENTILATED. CONTRACTOR TO COORDINATE LOCATION(S) WITH ARCHITECT PRIOR TO ROUGH-IN.
3. ALL TRANSFORMERS SHALL BE FUSED ON THE SECONDARY SIDE.
4. COLOR FILTERS SHALL BE GLASS OR DICHROIC UNLESS OTHERWISE INDICATED ON DRAWINGS.
5. CONTRACTOR TO PROVIDE 20% ADDITIONAL COLOR FILTERS FOR EACH COLOR AND SIZE.
6. CONTRACTOR TO VERIFY THAT ALL LIGHTING FIXTURES SPECIFIED WITH A COLOR FILTER ARE SUPPLIED WITH ANY AND ALL ATTACHMENT DEVICES FOR THE FILTER.
7. ALL TRACK LIGHTING FIXTURES SHALL BE PROVIDED WITH THE APPROPRIATE TRACK SYSTEM WHICH SHALL INCLUDE ALL MISCELLANEOUS COMPONENTS REQUIRED, AS WELL A ANY REQUIRED CIRCUIT LIMITERS FOR A COMPLETE INSTALLATION. TRACK LENGTH(S) SHALL BE PER DRAWINGS.

E. DRIVERS / TRANSFORMERS:

1. [OPTION?] IN FIXTURE MODEL NUMBER INDICATE THAT THE FIXTURE DRIVER TYPE AND QUANTITY MUST BE VERIFIED BY THE CONTRACTOR - USING FIXTURE CALLOUT INFORMATION AND FIXTURE SWITCHING CONFIGURATION INFORMATION.
2. CONTINUOUS DIMMING AND CONTROLLABLE LED:
   a. PROVIDE CONTROLLABLE LED DIMMING DRIVERS (INTEGRAL OR REMOTE) WITH POWER FACTOR GREATER THAN 0.85 AND MAXIMUM THD OF 20% AT FULL LOAD.
   b. PRIOR TO BID CONTRACTOR TO VERIFY DRIVER COMPATIBILITY WITH DIMMERS, DIMMING CONTROL SYSTEM(S) AND LIGHTING CONTROL SYSTEM(S) WITH RESPECTIVE LIGHTING MANUFACTURER(S) AND LIGHTING/DIMMING CONTROL SYSTEM MANUFACTURERS. IF COMPATIBILITY DOCUMENTATION IS UNAVAILABLE FOR A GIVEN LED FIXTURE/LIGHTING CONTROL SYSTEM COMBINATION, CONTRACTOR SHALL INCLUDE COSTS IN THE BASE BID FOR RESPECTIVE LIGHTING MANUFACTURER AND LIGHTING CONTROLS MANUFACTURER TO TEST/WARRANT COMPATIBILITY OF SAID COMBINATIONS.
   c. CONTINUOUS LED DIMMING DRIVERS SHALL BE AT MINIMUM 4-WIRE 0-10V 10% DIMMING (HOT, NEUTRAL, DIM+, DIM-). THE FIXTURE PART NUMBER SHOULD INDICATE THE TYPE OF DIMMING PROTOCOL REQUIRED.
   d. THE FIXTURE PART NUMBER SHOULD INDICATE THE TYPE OF DIMMING PROTOCOL REQUIRED.

F. EMERGENCY FIXTURES / BATTERY PACKS:

1. LIGHT FIXTURES INDICATED AS EMERGENCY SHALL BE IDENTIFIED / PROVIDED AS FOLLOWS:
   a. INTEGRAL BATTERY PACK (EB):
      3a/3EB - FIXTURE CONNECTED TO CIRCUIT "3", CONTROL SWITCHLEG "a" - WITH THE BATTERY CHARGING LEAD CONNECTED TO A CONSTANT HOT CIRCUIT "3".
      3NL/3EB - FIXTURE CONNECTED TO A CONSTANT HOT CIRCUIT "#3". BATTERY CHARGING LEAD CONNECTED TO A CONSTANT HOT CIRCUIT "3".
   b. REMOTE BACK-UP SOURCE (EM):
      3a/3EM - ROUTED THROUGH A U.L. LISTED TRANSFER RELAY (LC & D #GR-2001E/S) FOR SWITCHED CONTROLS OR A U.L. LISTED TRANSFER SWITCH (BODINE #GTD SERIES DEVICE) FOR DIMMING CONTROLS. CONNECTED TO A CONSTANT HOT EMERGENCY CIRCUIT "3". SEE DISTRIBUTED LIGHTING CONTROL SPECIFICATIONS FOR DEVICE REQUIREMENTS WHEN CONTROLLED BY OCCUPANCY SENSORS.
      3NL/3EM - FIXTURE CONNECTED TO A CONSTANT HOT EMERGENCY CIRCUIT "3".
   c. REMOTE BACK-UP SOURCE (EM) NOTES:
      - ALL REMOTE BACK UP SOURCE (EM) FIXTURES SHALL BE PROVIDED WITH AN IN LINE FUSE. PROVIDE ADDITIONAL LABELING TO INDICATE FIXTURE IS PROTECTED BY A FUSE.
2. EMERGENCY BATTERY PACK NOTES:
   a. PROVIDE INTEGRAL TEST SWITCH OPTION FOR ALL EMERGENCY BATTERY PACKS INSTALLED IN LIGHT FIXTURES.
   b. ALL RECESSED DOWNLIGHTS SUPPLIED WITH A BATTERY PACK SHALL BE PROVIDED WITH AN INTEGRAL COMBINATION TEST SWITCH / CHARGING INDICATOR LIGHT- MOUNTED INSIDE THE REFLECTOR. REMOTE TEST SWITCH / CHARGING LIGHTS ARE NOT ALLOWED. THE TEST SWITCH / CHARGING INDICATOR LIGHT SHALL BE SECURELY ATTACHED TO THE REFLECTOR WITH 18" OF SLACK LEADS, FOR EASY REMOVAL OF THE REFLECTOR ASSEMBLY.
   c. BATTERY PACKS ALL SHALL BE PROVIDED WITH A COMBINATION TEST SWITCH / CHARGE LIGHT.
   d. CONTRACTOR TO VERIFY WITH FIXTURE MANUFACTURER(S) PRIOR TO BID THAT EMERGENCY BATTERY PACKS ARE INTEGRAL TO FIXTURE HOUSINGS.
   e. SHOULD THE SPECIFIED LED EMERGENCY BATTERY PACK(S) NOT FIT WITHIN A GIVEN FIXTURE(S), CONTRACTOR SHALL INCLUDE ALL COSTS IN BASE BID TO LOCATE/CONNECT SELF-TESTING MINI INVERTER(S) (IOTA #ILS SERIES OF BODINE#ELI-S-[WATT?]) REMOTELY FROM THE FIXTURE(S) IN THE NEAREST ELECTRICAL ROOM OR TO LOCATE EMERGENCY BATTERY PACK(S) REMOTELY FROM THE FIXTURE ABOVE THE NEAREST ACCESSIBLE CEILING. CONTRACTOR TO VERIFY REQUIRED INVERTER SIZING AS NECESSARY.
   f. EMERGENCY OPERATION OF LED FIXTURE FOR A MINIMUM OF 90 MINUTES, AND A MINIMUM OF 10 WATTS, OR AS SPECIFIED. ACCEPTABLE MANUFACTURES: BODINE OR IOTA.
   g. TO MAINTAIN UL LISTING OF LED FIXTURE, FIXTURE MANUFACTURER(S) SHALL INSTALL LED EMERGENCY BATTERY PACKS AT THE FACTORY AND OBTAIN A UL LISTING FOR THE FIXTURE WITH EMERGENCY BATTERY PACK. FIELD-INSTALLATION OF LED EMERGENCY BATTERY PACK9S) IS PROHIBITED.
   h. PROVIDE "DL" OPTION IN ALL DAMP LABEL INSTALLATIONS.

LIGHTING FIXTURE SCHEDULE

SYMBOL	TYPE	MANUFACTURER AND MODEL NUMBER	FIXTURE VA/ WATTS	LAMP/ LAMP OPTION	GENERAL DESCRIPTION
	1	METALUX 24RLN-42-UNV-L835-CD-1 - EQUAL BY: DAY-BRITE	31.2	LED/3500K	2'x4' RECESSED LED TROFFER WITH 4200 LUMEN LED MODULE, 0-10V DIMMING DRIVER, PERFORATED CENTER BASKET DIFFUSER. SHADED SYMBOL INDICATES EMERGENCY FIXTURE EQUIPPED WITH A 90 MINUTE EMERGENCY BATTERY PACK. -
	2	METALUX 4WNLED-LD4-32SL-F-UNV-L835-CD1 - EQUAL BY: DAY-BRITE	29/29	LED/3500K	1'X4' SURFACE MOUNTED LED WITH FROSTED ACRYLIC WRAP LENS, STEEL HOUSING, AND 0-10V DIMMING DRIVER. 3200 LUMEN OUTPUT. SHADED SYMBOL INDICATES EMERGENCY FIXTURE EQUIPPED WITH A 90 MINUTE EMERGENCY BATTERY PACK. -
	3	METALUX 4SNLED-LD5-22SL-LN-UNV-L835-CD1 - EQUAL BY: DAY-BRITE	16/16	LED/3500	ROUND SEMI-FROST LENSED STRIPLIGHT FOR USE WITH 16W, 2276 LUMEN MODULE 4 FOOT BY 3-INCH BY 3 11/16-INCH. FROSTED ACRYLIC LENS VERIFY HEIGHT WITH ARCHITECT PRIOR TO ROUGH-IN. PAINTED AFTER FABRICATION. 0-10V DIMMING. HIGH REFLECTANCE BAKED WHITE ENAMEL FINISH.
	4	METALUX 8TSNLED-LD5-60SL-LN-UNV-L835-CD1-AYC EQUAL BY: DAY-BRITE	50/50	LED/3500	ROUND SEMI-FROST LENSED STRIPLIGHT FOR USE WITH 50W, 6103 LUMEN MODULE 8 FOOT BY 3-INCH BY 3 11/16-INCH. FROSTED ACRYLIC LENS WITH CHAIN HANGER VERIFY HEIGHT WITH ARCHITECT PRIOR TO ROUGH-IN. PAINTED AFTER FABRICATION. 0-10V DIMMING. HIGH REFLECTANCE BAKED WHITE ENAMEL FINISH.
	5	METALUX 14-?-FA-LD4-32-F1-UNV-L835-CD-1 - EQUAL BY: DAY-BRITE	29.8	LED/3500	1'x4' RECESSED LED WITH PRISMATIC LENS, STEEL HOUSING, .125 ACRYLIC LENSE, STEEL HOUSING AND DOOR AND 0-10V DIMMING DRIVER. 3200 LUMEN OUTPUT. - - -
	6	SPECTRUM LIGHTING PROCTV22GV-240L-35K-DS10X-SC1-HC-DF22-PP-WAG22-CC-EMCR EQUAL BY: ?	155	LED/3500	PENDANT MOUNTED LED HIGH BAY 22" DIAMETER WITH PRISMATIC POLYCARBONATE REFRACTOR, HOOK AND CORD MOUNTING, WIRE GUARD, AND DIMMING DRIVER. PROVIDE 90 MINUTE EMERGENCY BATTERY PACK WHERE SHOWN ON PLANS. FINISH COLOR PER ARCHITECT. FIXTURE WEIGHT = 27 POUNDS. -
	7	HALO SLD606-8-35-WH - EQUAL BY: LIGHTOLIER	12/12	LED/3500K	SURFACE MOUNT SHOWER RATED DOWNLIGHT FOR USE WITH 12.2W, 800 LUMEN LED MODULE. 6-INCH APERTURE. 0-10V DIMMING. WHITE, NON-CONDUCTIVE TRIM. U.L. WET LOCATION LISTED (SHOWER RATED)
	8	METALUX 24GR-LD4-48-F1-UNV-L835-CD1-PAF EQUAL BY: PHILIPS DAY BRITE, HE WILLIAMS	44/44	LED/3500	RECESSED TROFFER FOR USE WITH 44W, 4800 LUMEN LED MODULE. 2 FOOT BY 4 FOOT. 3 1/4-INCH DEEP. #12 PATTERN ACRYLIC PRISMATIC LENS. PAINTED AFTER FABRICATION. 0-10V DIMMING. HIGH REFLECTANCE WHITE ENAMEL FINISH. FLAT WHITE STEEL DOOR. PROVIDE EMERGENCY BATTERY PACK WHERE SHOWN ON PLANS. -
	9	HALO HC6-10-D010-HM6-12-935-61-WD-C-WF - EQUAL BY: LIGHTOLIER	11/11	LED/3500K	RECESSED LED DOWNLIGHT WITH 6" APERTURE, SEMI-SPECULAR CLEAR FINISH, WIDE DISTRIBUTION, 1000 LUMENS, 0-10V DIMMING. - - -
	10	HALO HC4-10-D010-HM4-41-RWW-935-C SW-1-L1 EQUAL BY: PRESCOLITE, LITEOLIER	15.5	LED/3500	RECESSED LED WALL WASH DOWNLIGHT WITH 4" APERATURE, ALUMINUM REFLECTOR, SPECULAR CLEAR REFLECTOR, 0-10V DIMMING DRIVER. - - -
	11	FAIL SAFE UCL-?-LD4-35-A12125-EDCI-UNV-RSW - EQUAL BY: DAY-BRITE	7.5/FT	LED/3500	LED UNDERCABINET LIGHT WITH ACRYLIC LENS, ROCKER SWITCH AND ELECTRONIC DRIVER. VERIFY LENGTHS REQUIRED PER PLANS. - - -
OR	12	SURE-LITES LPX-7-[FACES?]-[FINISH?]-[OPTION?]-[SD OPTION?]-[PROTECTION?] EQUAL BY: ???	2/2	LED/GREEN	THERMOPLASTIC EXIT SIGN FOR USE WITH LED LAMPS. EMERGENCY BATTERY PACK. REFER TO ARCHITECTURAL PLANS FOR NUMBER OF FACES AND CHEVRONS. GREEN LETTERS AND WHITE HOUSING,
	13	FAIL SAFE HVL8-4-LD4-1-STD-35-UNV-C-EDD-1-S - EQUAL BY: DAY-BRITE	32	LED/3500	4' SURFACE MOUNTED LED WITH CLEAR RIBBED LENS, EXTRUDED ALUMINUM RAILS, DIE-CAST END CAPS AND 0-10V DIMMING DRIVER. - - -
	14	CAMMAN LIGHTING P2282-14-MVT-FR-? - EQUAL BY: PATHWAY	25	LED/3500	PENDANT MOUNTED LED DOWNLIGHT 14" DIAMETER. VERIFY SUSPENSION LENGTH AND FINISH WITH ARCHITECT PRIOR TO ORDER. EMERGENCY BATTERY PACK WHERE SHOWN ON PLANS. - -
	15	METALUX 4-BCLED-LD4-32SL-F-UNV-L835-CD-1 - EQUAL BY: DAY-BRITE	32	LED/3500	4' LED WALL BRACKET WITH OPAL WHITE ACRYLIC LENS, STEEL HOUSING AND 0-10V DIMMING DRIVER. 3200 LUMEN OUTPUT. - - -
	16	HALO PD6-15-ED010-PDM6A-835-61V-C - EQUAL BY: LIGHTOLIER	17	LED/3500	RECESSED LED DOWNLIGHT 6" APERTURE WITH CLEAR SPECULAR REFLECTOR, 0-10V DRIVER. 1500 LUMEN OUTPUT. - - -
	17	BACKLIGHT BKL-UL-00-1795 - EQUAL BY: XAL	34	LED/3000	5.25 X 47" RECESED MOUNTED FLAT PANEL LINEAR WITH 0-10V DIMMING DRIVER AND 2163 LUMEN. FIXTURE SHALL BE FULLY COMPATIBLE WITH ARMSTRONG CEILING. THE CONTRACTOR SHALL PROVIDE ALL NECESSARY MOUNTING HARDWARE, WIRING, DRIVERS, ETC. FOR A COMPLETE AND OPERABLE SYSTEM. -
	18	METALUX LHB-12-UNV-L840-CD-OEF-P-2MHO - EQUAL BY: DAY-BRITE	87	LED/4000K	1'X4' CABLE MOUNT LED HI-BAY WITH DIFUSED LENS, 0-10V DIMMING DRIVER, STEEL HOUSING. VERIFY MOUNTING HEIGHT IN FIELD. SHADED SYMBOL INDICATES EMERGENCY FIXTURE EQUIPPED WITH A 90 MINUTE EMERGENCY BATTERY PACK. -
	19	FOCAL POINT FSM4BW-FLFL-625DN-375UP-35K-1C-UNV-LD1-WM-WH EQUAL BY: -	8.8W/FT	LED/3500	WALL MOUNTED LINEAR LED WITH 4" APERATURE, EXTRUDED ALUMINUM HOUSING, FROSTED ACRYLIC LENS. AND 0-10V DIMMING DRIVER. PROVIDE 90 MINUTE EMERGENCY BATTERY PACK WHERE SHOWN ON PLANS. PROVIDE LENGTHS AS SHOWN ON PLANS. - -
	20	FOCAL POINT FSM4BS-FLFL-625DN-275UP-35K-1C-UNV-LD1-C24-WH-4 EQUAL BY: DAY-BRITE	26	LED/3500K	LINEAR LED, SUSPENDED LUMINAIRE WITH 4" X LENGTH AS REQUIRED 2,500 LUMENS PER FOUR FOOT SECTION, INTEGRAL DIMMING DRIVER CONTINUOUS ROW LENGTHS AS SHOWN ON PLANS. - -
	21	MCGRAW-EDISON IST-SA1-350-740-U-T4FT-[FINISH]-CBP-CEC - EQUAL BY: GARDCO	20.1	LED/4000	SURFACE MOUNTED LED SCONCE, DIE-CAST ALUMINUM HOUSING, FULL CUTOFF, MEDIUM THROW, APPROXIMATE LUMEN OF PACKAGE 2,700 LUMENS, WET LOCATION IP66 RATED. VERIFY FINISH COLOR WITH ARCHITECT PRIOR TO ORDERING. PROVIDE INTEGRAL 90 MINUTE EMERGENCY BATTERY PACK.
	22	PLC LIGHTING QR111119-RG EQUAL BY: -	3	LED/3000	CUSTOM WALL MOUNTED LED READING LIGHT WITH INTEGRATED ROCKER SWITCH AND USB CHARGING PORT. VERIFY EXACT MOUNTING HEIGHT WITH ARCHITECT PRIOR TO ROUGH-IN. - -
	23	BACKLIGHT BKL-UL-00-1783 - EQUAL BY: XAL	68	LED/3000	5.25 X 95" RECESED MOUNTED FLAT PANEL LINEAR WITH 0-10V DIMMING DRIVER AND 4325 LUMEN. FIXTURE SHALL BE FULLY COMPATIBLE WITH ARMSTRONG CEILING. THE CONTRACTOR SHALL PROVIDE ALL NECESSARY MOUNTING HARDWARE, WIRING, DRIVERS, ETC. FOR A COMPLETE AND OPERABLE SYSTEM. -
	24	WAC LIGHTING 1052F-835-WT-LHC1-3580-1208-W-SL-REF-LUX1208-F-LENS-25-SNOOT-WT EQUAL BY: -	52	LED/3500	LED TRACK HEAD WITH 4" APERTURE, DIE-CAST ALUMINUM HOUSING WITH REMOVABLE FRONT CAP, DIMING DRIVER, 365 DEGREE HORIZONTAL ROTATION AND 180 DEGREE VERTICAL AIMING. PROVIDE COMPATABLE TWO CIRCUIT TRACK, LENGTH AS SHOWN ON PLAN, AND ALL NECESSARY MOUNTING HARDWARE AS REQUIRED. -
	25	FOCAL POINT - - EQUAL BY: -	-	LED/3500	RECESSED LINEAR LED WITH 4" APERATURE, EXTRUDED ALUMINUM HOUSING, FROSTED ACRYLIC LENS. AND 0-10V DIMMING DRIVER. PROVIDE 90 MINUTE EMERGENCY BATTERY PACK WHERE SHOWN ON PLANS. PROVIDE ALL NECESSARY TRIM SO THAT LIGHT FIXTURES CAN BE FLUSH MOUNTED IN TILE. -
	26	RAYON LIGHTING RHL6F-ICAT-RFL6-8L-35-018-6RLW-6TLW - EQUAL BY: -	11	LED/3500	RECESSED FIRE RATED LED DOWLIGHT WITH TWO HOUR FIRE RATING, 6" APERATURE, STEEL HOUSING, 0-10V DIMMING DRIVER, 800 DELIVERED LUMENS, WHITE REFLECTOR AND WHITE TRIM. PROVIDE 90 MINUTE EMERGENCY BATTERY PACK WHERE SHOWN ON PLANS. WET LOCATION LISTED. -
	27	SPI LIGHTING AIP11849-L97-UNV-3500K-H05-[FINISH]-CAS - EQUAL BY: PHILIPS	97	LED/3500K	5' ROUND DECORATIVE PENDANT FIXTURE. 9,600 LUMEN OUTPUT. 0-10V DIMMING. PROVIDE WITH LED 3500K LIGHT SOURCE. DIRECT/INDIRECT. VERIFY FINISH WITH ARCHITECT PRIOR TO ORDERING. - -
	S1	MCGRAW-EDISON GLEON-AE-02-LED-E1-T4W-BZ-MS/2-L20 - EQUAL BY: GARDCO	105	LED/4000	SINGLE LED LUMINAIRE, POLE MOUNTED AT 18'-0" AFF, WITH EXTRUDED ALUMINUM HOUSING AND BI-LEVEL MOTION SENSOR. PROVIDE 15' SQUARE STEEL POLE. BRONZE FINISH. - -
	S2	MCGRAW-EDISON GLEON-AE-02-LED-E1-T4W-BZ-MS/2-L20 - EQUAL BY: GARDCO	210	LED/4000	DOUBLE LED LUMINAIRE, POLE MOUNTED AT 18'-0" AFF, WITH EXTRUDED ALUMINUM HOUSING AND BI-LEVEL MOTION SENSOR. PROVIDE 15' SQUARE STEEL POLE. BRONZE FINISH. - -
	S2	MCGRAW-EDISON 1ST-F01-LED-E1-BL4-BZ - EQUAL BY: GARDCO	26	LED/4000	LED WALL SCONCE WITH DIE-CAST ALUMINUM HOUSING, POWDER COAT FINISH. - - - -
	S3	THE LED COMPANY AGN-1G2-3-CW-N - EQUAL BY: -	30	LED/4000	SEMI-RECESSED GROUND MOUNTED LED SPOT LIGHT WITH ALUMINUM HOUSING, STAINLESS STEEL HARDWARE, HDPE TUBING MOUNTING, NARROW LIGHT OUTPUT DISTRIBUTION. - -
	S4	MCGRAW-EDISON GPC-SA1-B-740-UNV-T2R-QM-BZ - EQUAL BY: GARDCO	44	LED/4000	SINGLE LED LUMINAIRE, POLE MOUNTED AT 10'-0" AFF, WITH EXTRUDED ALUMINUM HOUSING. PROVIDE 10' SQUARE STEEL POLE. BRONZE FINISH. - -
	S5	MCGRAW-EDISON GLEON-AE-02-ED-?-T4W-BZ-MS/2-L20 - EQUAL BY: GARDCO	105	LED/4000	SINGLE LED LUMINAIRE, POLE MOUNTED AT 15'-0" AFF, WITH EXTRUDED ALUMINUM HOUSING, DIE-CAST ALUMINUM END CAPS AND BI-LEVEL MOTION SENSOR. PROVIDE 15' SQUARE STEEL POLE. BRONZE FINISH. - -
	S6	CALI ALS500T-SMQ-??-4.0K-6W-10V-?-WET-UNV-4' - EQUAL BY: ?	24	LED/4000	SURFACE MOUNTED 4' LINEAR LED WITH EXTRUDED AUMINUM HOUSING, FROSTED ACRYLIC LENS, 0-10V DIMMING DRIVER. UL WET LOCATION LISTED. PROVIDE ALL NECESSARY MOUNTING HARDWARE AS REQUIRED. - -
	S7	RAYON T720LED-30W-UNI12-40-BZ-S - EQUAL BY: ?	18	LED/4000	SURFACE MOUNTED LED CANOPY LIGHT WITH DIE-CAST ALUMINUM HOUSING, POWDERCOAT FINISH, 0-10V DIMMING DRIVER, AND POLYCARBONATE LENS. - - -
	S8	CONCORD AMERICAN SGIR-M-??5K-GLD-?? - EQUAL BY: NO KNOWN EQUAL	5	LAD/4000	INTERNAL HALYARD TRUCK, LED DOME FIXTURE TO MOUNT ON TOP OF FLAG POLE. WITH LOW VOLTAGE REMOTE MOUNTED DIRECT BURIED POWER SUPPLY, CONCORD AMERICAN #DBP-1000. VERIFY LOCATION OF FLUSH IN-GRADE JUNCTION BOX FOR MOUNTING OF TRANSFORMER. PROVIDE ALL NECESSARY WIRING FROM POWER SUPPLY TO LIGHT FIXTURE AT TOP OF THE POLE. VERIFY FINISH COLOR AND POLE DIAMETER WITH ARCHITECT PRIOR TO ORDER.

SEE GENERAL LIGHTING FIXTURE SCHEDULE NOTES FOR CRITICAL FIXTURE SPECIFICATION AND ORDERING INFORMATION.

IDENTIFICATION STAMP
DIV. OF THE STATE ARCHITECT
APP: 02-118630 INC:
REVIEWED FOR
SS ☐ FLS ☐ ACS ☑
DATE: 04/13/2021

OFFICE OF THE STATE FIRE MARSHAL
APPROVED FIRE AND PANIC ONLY
Approval of this plan does not authorize or approve any omission or deviation from applicable regulations. Final approval is subject to field inspection. One set of approved plans shall be available on the project site at all times.
PERMIT NO.: 20-N-2332-CP
REVIEWED BY: LITO CATAYLO, OSFM
DATE: 4/ 1 /2021

GENERAL SERVICES
Department of General Services
State of California
Real Estate Services Division
Project Management & Development Branch
707 Third Street, Suite 4-105
West Sacramento, California 95605

NICHOLS MELBURG & ROSSETTO
ARCHITECTS + ENGINEERS
300 Knollcrest Drive
Redding, CA. 96002
(530) 222-3300 (530) 222-3538 FAX
http://www.nmrdesign.com

Copyright © 2019
All ideas, designs, arrangements and plans indicated or represented by this drawing are owned by, and the property of, NICHOLS, MELBURG and ROSSETTO and were created, evolved and developed for use on, and in conjunction with, the specified project. None of such ideas, designs, arrangements or plans shall be used by, or disclosed to any person, firm or corporation for any purpose whatsoever without the written permission of NICHOLS, MELBURG and ROSSETTO.

LICENSE STAMPS
REGISTERED PROFESSIONAL ENGINEER RAYMOND W. SWARTZ No. E15610 Ex. 12/31/2021 ELECTRICAL STATE OF CALIFORNIA
Date Signed: 3/25/2021

CONSULTANT
tk1sc COLLABORATIVE
11870 Pierce Street, Suite 160
Riverside, California 92505
951.299.4160 www.tk1sc.com
Project Leader - Jerry Leonhardt
Electrical Lead - Reid Cordry
tk1sc Job #:2019-0228A

DRAWING STATUS
CONSTRUCTION DOCUMENTS

ISSUE

No.	Date	Description
1	10/20/2020	INITIAL PLAN REVIEW
2	01/22/2021	AGENCY RESUBMITTAL
3	03/22/2021	AGENCY RESUBMITTAL

If drawing is not 30" x 42" it is a reduced print

PROJECT
RESIDENTIAL CENTER, UKIAH: REPLACEMENT OF EXISTING RESIDENTIAL CENTER
440 EAST HILL ROAD
WILLITS, CALIFORNIA 95490
MENDOCINO COUNTY
CALIFORNIA CONSERVATION CORP

Supervisor | Designed | Drawn: Author

DSA Application No. 02-118630

SHEET TITLE
LIGHTING FIXTURE SCHEDULE

DGS Project Number 000000000001826 | NMR Project Number 18-6456

Reference North: NORTH | Sheet Scale 12" = 1'-0"

Sheet Number E501

ISSUE DATE July 9, 2021

Plot Date: 3/23/2021 3:14:46 PM
File Name: BIM 360://CCC Willits Residential Center/E_CCC Willits_COMMON_2019-0228A.rvt

DISTRIBUTED LIGHTING CONTROLS ACCEPTABLE MANUFACTURES:

WATTSTOPPER:

WALL BOX SENSORS:	STANDALONE SINGLE RELAY = #DW-100 STANDALONE 0-10V DIMMING WITH SINGLE RELAY = #PW-311 STANDALONE DUAL RELAY = #DW-200 SYSTEM-BASED DIMMING CONTROL = #LMDW-102
CEILING SENSORS:	ONE-WAY DIRECTIONAL = #LMDC-100 WITH MASKING AS REQUIRED. 360 DEGREE COVERAGE = #LMDC-100
DAYLIGHT SENSORS:	OPEN LOOP SENSOR = #LMLS-500 (1-3 ZONE) OR CLOSED LOOP SENSOR = #LMLS-400 (1 ZONE ONLY) REMOTE CONTROL = #LMCT-100 (HAND TO OWNER AT COMPLETION OF PROJECT.)
CONTROL UNITS:	SWITCHED = #LMRC-10? (NUMBER OF RELAYS AS REQUIRED). CONTINUOUS DIMMING (O-10V) = #LMRC-21? (NUMBER OF RELAYS AS REQUIRED). CONTINUOUS DIMMING (UNIVERSAL) = #LMRC-22? (NUMBER OF RELAYS AS REQUIRED). RECEPTACLE CONTROL = #LMPL-101 OR LMPL-201 WHERE MORE THAN 4 RECEPTACLE CONTROL UNITS ARE TIED TOGETHER. HVAC CONTROL = #LMRL-100 AV SYSTEM SERIAL INTERFACE = #LMDI-100 (SCREENS / AV SYSTEM INTEGRATION) MOVEABLE PARTITION INTERFACE & SENSOR = #LMIO-102 PARTITION INTERFACE, #LMPS-104 PARTITION SWITCH/STATUS INDICATOR, #BZ-50 POWER PACK (SENSOR POWER) & PARTITION SENSOR #ENTERTAINMENT NETWORKS SENSOR W/BOTTOM COVER (www.entertainmentworks.com). DUAL MODE CORRIDOR/STAIRWAY/AISLEWAY CONTROL INPUT = #LMZC-301, UNLESS OTHERWISE NOTED.
WALL CONTROLS:	DIMMING = #LMSW-101/102/103/104/108 (# OF SWITCHES AS REQUIRED 4/YOKE MAX). KEYED SWITCH = #LMIO-101 INPUT INTERFACE W/ LEVITON #1221-2L-? KEYED SWITCH
NETWORK COMPONENTS:	ZONE SEGMENT MANAGER = #LMSM-3E/#LMSM-6E W/#LMSM-ENC1 ENCLOSURE. NETWORK BRIDGE / ROUTER / SWITCH = #LMBC-300/#NB-ROUTER/#NB-SWITCH NETWORK WIRING = #LM-MSTP. NETWORK RELAY PANELS = LMCP8, 24 OR 48
INTERCONNECT COMPONENTS:	NETWORK BRIDGE / ROUTER / SWITCH = #LMBC-300/#NB-ROUTER/#NB-SWITCH PROVIDE TEMPORARY NB ROUTER AND LAPTOP TO DEMONSTRATE DEMAND RESPONSE CAPABILITY DURING ACCEPTANCE TESTING.
EMERGENCY POWER INTERFACE:	SWITCHING / STEP DIMMING = #ELCU-200 BYPASS DEVICE. CONTINUOUS DIMMING = #ELCU-200 BYPASS DEVICE.
LOAD INTERFACE DEVICE:	LUTRON COMPONENTS = LUTRON #BCI-0-10. REVERSE/FORWARD PHASE DIMMING COMPONENTS = LUTRON #PHPM-PA-DV-WH.

nLIGHT:

WALL BOX SENSORS:	STANDALONE SINGLE RELAY = #WSX-PDT STANDALONE DUAL RELAY = #WSX-PDT-2P SYSTEM-BASED DIMMING CONTROL = #nWSX-PDT-LV-DX
CEILING SENSORS:	ONE-WAY DIRECTIONAL = #NRM-PDT-9 W/MASKING AS REQUIRED. 360 DEGREE COVERAGE = #NRM-PDT-9 STANDARD RANGE, #NRM-PDT-10 EXTENDED RANGE/CORRIDOR
DAYLIGHT SENSORS:	CLOSED LOOP SENSOR = #NES-ADCX / #NRM-ADCX (ONLY IF REQUIRED BY CLG. TYPE). REMOTE CONTROL = N/A
CONTROL UNITS:	SWITCH / STEPPED DIMMING = #NPP-16/#NSP-16 (NUMBER OF RELAYS AS REQUIRED). CONTINUOUS DIMMING (O-10V) = #NPP16-D (NUMBER OF RELAYS AS REQUIRED). CONTINUOUS DIMMING (UNIVERSAL) = #NSP5-PCD (NUMBER OF RELAYS AS REQUIRED). AUXILIARY INPUT/ OUTPUT CONTROL = #NAR-40 RECEPTACLE CONTROL = #NPP20 PL HVAC CONTROL = #NAR-40 AV SYSTEM SERIAL INTERFACE = #nIO X (SCREENS / AV SYSTEM INTEGRATION) MOVEABLE PARTITION INTERFACE & SENSOR = #FRESCO TOUCH PANEL #NFCS-7TSN (PER SPACE) #NIO-1S POWER PACK (SENSOR POWER) & PARTITION SENSOR #ENTERTAINMENT NETWORKS SENSOR W/BOTTOM COVER (www.entertainmentworks.com). DUAL MODE CORRIDOR/STAIRWAY/AISLEWAY CONTROL INPUT = LC&D BLUE BOX, UNLESS OTHERWISE NOTED.
WALL CONTROLS:	DIMMING = #NPODM-DX SERIES (# OF DIMMERS AS REQUIRED - 4 / YOKE MAX) KEYED SWITCH = #NIO INPUT INTERFACE W/LEVITON #1221-2L-? KEYED SWITCH

NETWORK COMPONENTS:	GATEWAY = #NECY-120, NGWY2-GFX, 13.9"H x 10"W x 4.5"D ENCLOSURE TO BE PROVIDED BY CONTRACTOR
	BRIDGE = #NBRG-8-KIT
	NETWORK RELAY PANELS = ARP INTENCXX NLT XXFCR MVOLT, QTY AS REQUIRED, TO INCLUDE SPARE RELAYS SHOWN IN SCHEDULES.

INTERCONNECT COMPONENTS:	GATEWAY = #NECY-120, NGWY2-GFX, 13.9"H x 10"W x 4.5"D ENCLOSURE TO BE PROVIDED BY CONTRACTOR
	BRIDGE = #NBRG-8-KIT
	STANDARDS BASED ADR RECEIVER = NADR
	PROVIDE END USER CLIENT WITH (1) WIRELESS PROGRAMMING DEVICE (NIO-BT) FOR MAINTENANCE AND PROGRAMMING

EMERGENCY POWER INTERFACE:	SWITCHING / STEP DIMMING = NPP16-ER CONTINUOUS DIMMING = #NPP16-D-ER
LOAD INTERFACE DEVICE:	LUTRON COMPONENTS = LUTRON #BCI-0-10. REVERSE PHASE DIMMING COMPONENTS = #NSP5-PCD-ELV120/LUTRON #PHPM-PA-DV-WH. FORWARD PHASE DIMMING COMPONENTS = #NSP5-PCD-MLV/LUTRON #PHPM-PA-DV-WH. 2 & 3 WIRE DIMMING COMPONENTS = #NSP5-PCD-2W/3W OR LUTRON #PHPM-PA-DV-WH.

COOPER CONTROLS (GREENGATE):

WALL BOX SENSORS:	STANDALONE SINGLE RELAY = #ONW-D-1001-MV-N SERIES STANDALONE DUAL RELAY = #ONW-D-1001-DMV-N SERIES SYSTEM-BASED DIMMING CONTROL = NOT AVAILABLE
CEILING SENSORS:	ONE-WAY DIRECTIONAL = #OAC-DT-501 (500 S.F. MAXIMUM) 360 DEGREE COVERAGE = #OAC-DT-1000 (1,000 S.F. MAXIMUM) 360 DEGREE COVERAGE = #OAC-DT-2000
DAYLIGHT SENSORS:	OPEN LOOP SENSOR = #DSRC-FMOIR REMOTE CONTROL = #HHPRG-RC
CONTROL UNITS:	SWITCH / STEPPED DIMMING = #RC3D-PL PLENUM RATED SERIES (NUMBER OF RELAYS AS REQUIRED). CONTINUOUS DIMMING (O-10V) = #RC3D PLENUM RATED SERIES (NUMBER OF RELAYS AS REQUIRED). CONTINUOUS DIMMING (UNIVERSAL) = USE WITH LOAD INTERFACE DEVICE AUXILIARY INPUT / OUTPUT CONTROL = #OCC-RJ45 RECEPTACLE CONTROL = #SPRC-R-20-120 HVAC CONTROL = #-R OPTION ON OCCUPANCY SENSOR OR CONTACT CLOSURE VIA TERMINAL #5 ON RC CONTROL UNIT. AV SYSTEM SERIAL INTERFACE: REQUIRES NETWORKING TO PROVIDE SERIAL CONNECTION. MOVEABLE PARTITION INTERFACE & SENSOR: REQUIRES NETWORKING TO PROVIDE PARTITIONING. DUAL MODE COORDIDOR/STAIRWAY/AISLEWAY CONTROL INPUT = RC3 SERIES, UNLESS OTHERWISE NOTED.PROVIDE QTY OF CONTROLLERS AND SEPARATE DEMAND RESPONSE/INTERCONNECT CABLING AS REQUIRED.
WALL CONTROLS:	DIMMING = #RC SERIES DIMMERS (# OF DIMMERS AS REQUIRED - 4 / YOKE MAX) KEYED SWITCH = #OCC-RJ45 INPUT INTERFACE W/LEVITON #1221-2L-? KEYED SWITCH
NETWORK COMPONENTS:	NETWORK ADAPTER = RC3D-PL-N OR RC3DE-PL-N
INTERCONNECT COMPONENTS:	DEMAND RESPONSE INCLUDED STANDARD IN CONTROL UNITS. PROVIDE QTY OF CONTROLLERS AND SEPARATE DEMAND RESPONSE/INTERCONNECT CABLING AS REQUIRED.
EMERGENCY POWER INTERFACE:	SWITCHING / STEP DIMMING = PROVIDE THE #RC3E OPTION ON CONTROLLER. CONTINUOUS DIMMING = PROVIDE THE #RC3DE OPTION ON CONTROLLER.
LOAD INTERFACE DEVICE:	LUTRON COMPONENTS = LUTRON #BCI-0-10. REVERSE PHASE DIMMING COMPONENTS = LDCM-PL 2-WIRE DIMMING (FORWARD PHASE-ONLY) = GREENGATE #PD216 SERIES INTERFACE.
NETWORK INTERFACE:	NOT AVAILABLE

DISTRIBUTED LIGHTING CONTROLS SYSTEM SPECIFICATIONS (OCCUPANCY / VACANCY SENSORS AND DAYLIGHTING CONTROLS):

1. SEE LIGHTING PLAN DRAWINGS FOR DISTRIBUTED LIGHTING CONTROL SYSTEM (DLCS) SPECIFICS, SPACE SPECIFIC CONFIGURATIONS/REQUIREMENTS, AS WELL AS FIXTURE BALLAST/DRIVER CONFIGURATIONS.
2. ALL PRODUCTS SHALL BE BACKED BY A FIVE YEAR MANUFACTURER'S WARRANTY.
3. ALL PRODUCTS LISTED IN THIS SPECIFICATION ARE BASED UPON PRODUCTS LISTED ON THIS SHEET. THE FEATURES AND CHARACTERISTICS OF THE PRODUCT LITERATURE AND SPECIFICATION SHEETS AVAILABLE ON THE VARIOUS MANUFACTURER'S WEB-SITES ARE INCLUDED IN THE REQUIREMENT OF THESE SPECIFICATIONS. ALL DLCS NETWORKED/INTERCONNECTED/NON-NETWORKED SYSTEM-BASED AND STANDALONE COMPONENTS SHALL BE PROVIDED BY A SINGLE MANUFACTURER.
4. DLCS COMPONENTS SHALL BE COMPLIANT WITH ALL APPLICABLE FEDERAL, STATE AND LOCAL ENERGY CODES AND BE PROVIDED AS FOLLOWS:

   a. WALL MOUNTED OCCUPANCY SENSORS:

   STANDALONE: WALL MOUNTED OCCUPANCY SENSORS SHALL BE UL LISTED AND HAVE A MINIMUM LOAD CAPACITY OF 800 WATTS AT 120 VOLTS AND 1200 WATTS AT 277 VOLTS. WALL SENSORS SHALL ALSO BE DECORATOR STYLE, WITH A LOW-PROFILE APPEARANCE AND A HARD LENS FOR DURABILITY. SENSOR SHALL UTILIZE PASSIVE INFRARED TECHNOLOGY (PIR) AND ULTRASONIC/MICROPHONIC TECHNOLOGY. UNIT SHALL BE RATED FOR 120/277 VOLT WITH NO MINIMUM LOAD, COMPATIBLE WITH ALL THE SPECIFIED BALLASTS, PROVIDED WITH A NEUTRAL CONNECTION (NO LEAKAGE TO GROUND) AND NO LEAKAGE TO LOAD IN THE "OFF" MODE. SENSOR SHALL BE UTILIZED IN SPACES NOT EXCEEDING 150 SQ.FT. SINGLE RELAY SENSORS SHALL BE CONFIGURED WITH THE RELAY IN A "MANUAL ON/ AUTO OFF" SETTING. DUAL RELAY SENSORS SHALL BE CONFIGURED WITH THE FIRST RELAY IN A "AUTOMATIC ON/ AUTOMATIC OFF" SETTING AND THE SECOND RELAY IN A "MANUAL ON/ AUTOMATIC OFF" SETTING. FACTORY STANDARD COLOR TO BE APPROVED BY ARCHITECT.

   SYSTEM-BASED: WHEN INDICATED WITH A DOT SYMBOL, "I" , OR "N" IN THE OCCUPANCY SENSOR SYMBOL, A LOW VOLTAGE, WALL MOUNTED OCCUPANCY SENSOR SHALL BE PROVIDED AND CONNECTED TO A CONTROL UNIT AS REQUIRED. SENSOR SHALL BE DECORATOR STYLE WITH A LOW-PROFILE APPEARANCE, HAVE ON/OFF/RAISE/LOWER BUTTONS, AND A HARD LENS FOR DURABILITY. SENSOR SHALL UTILIZE PASSIVE INFRARED TECHNOLOGY (PIR) AND ULTRASONIC/MICROPHONIC TECHNOLOGY. FACTORY STANDARD COLOR TO BE APPROVED BY ARCHITECT.

   b. SYSTEM-BASED CEILING MOUNTED OCCUPANCY SENSORS INDICATED WITH A DOT SYMBOL, "I" , OR "N" IN THE OCCUPANCY SENSOR SYMBOL SHALL HAVE A LOW-PROFILE APPEARANCE AND SHALL BE CONFIGURED IN ONE OF THE FOLLOWING WAYS AS INDICATED ON THE DRAWINGS:

   - AUTO ON: a/b
   - SWITCHED: AUTO ON a / MANUAL ON b
   - CONTINUOUS DIMMED: AUTO ON 50% a / MANUAL ON 100% a

   SENSOR(S) SHALL UTILIZE DUAL TECHNOLOGY (PIR AND ULTRASONIC/MICROPHONIC TECHNOLOGY) WITH 360 DEGREE COVERAGE. IN SPACES WITH DESKTOP ACTIVITIES, THE COVERAGE SHALL BE "HAND MOTION" AND SHALL NOT EXCEED 500 SQ. FT. AT A MAXIMUM CEILING HEIGHT OF 10 FT. IN CORRIDORS, STORAGE ROOMS AND OTHER SPACES WITH NON-DESKTOP ACTIVITIES, COVERAGE SHALL BE "HALF-STEP, WALKING MOTION" AND SHALL NOT EXCEED 1200 SQ. FT. AT A MAXIMUM CEILING HEIGHT OF 10 FT.

   c. "H" AT THE OCCUPANCY SENSOR INDICATES CONNECTION TO AUXILIARY OUTPUT CONTROL DEVICE FOR CONTROL OF A THIRD PARTY DEVICE VIA LOW-VOLTAGE CONTACT CLOSURES - 1 AMP @ 24V AC/DC. NC/NO RELAYS SHALL BE CONNECTED TO A CONTROLLER TO PERFORM THE AUXILIARY CONTROL REQUIREMENTS INDICATED BY THE DRAWINGS.

   d. "DM" PREFIX AT AT THE OCCUPANCY SENSOR INDICATES A DUAL MODE CORRIDOR/STAIRWAY/WAREHOUSE AISLE CONTROL FUNCTIONALITY TO BE IMPLEMENTED AS FOLLOWS:

   - BUSINESS HOUR MODE
     -- UNOCCUPIED CORRIDOR/STAIRWAY/AISLE LIGHTING SHALL AUTOMATICALLY DIM TO ACHIEVE 50% LIGHTING POWER LEVEL.
     -- UPON OCCUPANCY, LIGHTING SHALL AUTOMATICALLY BE BROUGHT TO 100% LIGHTING POWER LEVEL.
   - AFTER BUSINESS HOUR MODE
     -- UNOCCUPIED CORRIDOR/STAIRWAY/AISLE LIGHTING SHALL AUTOMATICALLY TURN OFF BASED ON CEC-LISTED TIME CLOCK OUTPUT CONTACT POSTION/TIME CLOCK PROGRAMMING.
     -- UPON OCCUPANCY, LIGHTING SHALL BE BROUGHT TO 100% LIGHTING POWER LEVEL.
     -- ONCE OCCUPANCY IS DETECTED IN A CORRIDOR, STAIRWAY, OR AISLE, THAT RESPECTIVE AREA SHALL OPERATE IN BUSINESS HOUR MODE UNTIL THE NEXT AFTER BUSINESS HOUR MODE OCCURS.
     -- UNOCCUPIED CORRIDOR/STAIRWAY/AISLEWAY LIGHTING SHALL AUTOMATICALLY REVERT TO BUSINESS HOUR MODE OPERATION BASED ON CEC-LISTED TIME CLOCK CONTACT POSTION/TIME CLOCK PROGRAMMING.

   E.C. SHALL BE RESPONSIBLE FOR PROVIDING ALL DEVICES AND WIRING REQUIRED FOR DUAL MODE OPERATIONS AND ANY PROGRAMMING/CONFIGURATION OF TIME-BASED OPERATING PARAMETERS TO INCLUDE OUTPUT CONTACT CLOSURES FROM TIME CLOCKS OR NETWORK GATEWAYS. COORDINATE WITH OWNER TO DETERMINE BUSINESS HOUR/AFTER BUSINESS HOUR MODES. WHERE DIAL MODE CONTROL IS ACCOMPLISHED THROUGH NON-NETWORK TIME CLOCK DEVICES, LOCATE EACH OF THESE DEVICES ADJACENT TO THE CLOSEST RESPECTIVE STAIRWAY/CORRIDOR/AISLEWAY CONTROL UNIT. IF THE PLANS IDENTIFY A NEW OR EXISTING CEC LIGHTING CONTROL PANEL AS THE SOURCE OF DUAL MODE TIMING, E.C. SHALL INCLUDE ALL COSTS TO INSTALL ANY NECESSARY I/O TERMINALS, CARDS, ETC. TO MAKE THE SYSTEM FULLY FUNCTIONAL.

   e. WHEN INDICATED WITH AN "N" IN THE OCCUPANCY SENSOR SYMBOL, A NETWORKED SYSTEM SHALL BE PROVIDED AND INSTALLED. THIS NETWORK-BASED SYSTEM SHALL PROVIDE/RESULT IN "LADDERLESS COMMISSIONING" OF DAYLIGHT CONTROLS. AT A MINIMUM, NETWORK ACQUIRED DATA SHALL PROVIDE CT-BASED LIGHTING POWER (WATTS) MEASUREMENTS PER THE COMMISSIONING PORTION OF THESE REQUIREMENTS. PROVIDE NETWORKED CONTROL UNITS/POWER PACKS/INTERFACES AND MISCELLANEOUS EQUIPMENT AS FOLLOWS:

      1. NETWORK SEGMENT MANAGER WITH NATIVE BACnet IP - QUANTITY AS REQUIRED BASED UPON A MAXIMUM OF 100 LOCAL ROOM NETWORKS PER SEGMENT AND A MINIMUM OF ONE SEGMENT MANAGER PER FLOOR. THIS EQUIPMENT SHALL BE LOCATED IN THE TYPICAL FLOOR ELECTRICAL ROOM.
      2. NETWORK BRIDGE CONNECTING THE SEGMENT MANAGER TO THE CONTROLLER SUB/LOCAL NETWORK.
      3. SEGMENT NETWORK WIRING FROM NETWORK SEGMENT MANAGER TO FIRST NETWORK CONTROLLER DEVICE AS WELL AS ALL OTHER NETWORK CONTROLLER CONNECTIONS (VIA LINEAR TOPOLOGY) AS REQUIRED.
      4. ALL CORRIDORS AND STAIRWELLS SHALL BE PROVIDED WITH DUAL MODE CORRIDOR/STAIRWAY CONTROLS TO INCLUDE CEC-LISTED TIME CLOCK(S) OR SYSTEM GATEWAYS, INTERPOSING RELAYS (WHEN INTERFACING WITH EXISTING CEC-LISTED RELAY PANELS), WIRING, 120V POWER, PROGRAMMING, ETC. NECESSARY FOR A COMPLETE AND FUNCTIONING CONTROL SYSTEM.
      5. INCLUDE ALL COSTS IN BASE BID TO PROVIDE 120V CIRCUIT(S) AND RECEPTACLE(S) NECESSARY TO POWER ALL DEMAND RESPONSE EQUIPMENT.
      6. PROVIDE DATA OUTLET/PATHWAY, DATA CABLING (IF REQUIRED ELSEWHERE BY PROJECT DOCUMENTS), AND CONNECTION TO THE PROJECT'S LOCAL AREA NETWORK.
      7. INCLUDE ALL COSTS IN BASE BID TO PROVIDE 120V CIRCUIT(S) AND RECEPTACLE(S) NECESSARY TO POWER ALL NETWORK SEGMENT MANAGERS, SWITCHES AND ROUTERS.
      8. DEMONSTRATE DLCS RESPONSE TO A SIMULATED DEMAND RESPONSE REQUEST AS PART OF THE LIGHTING COMMISSIONING PROCESS. WHERE MORE THAN ONE WIRING TOPOLOGY AND/OR ZONE IS REQUIRED TO ACCOMPLISH DEMAND RESPONSE - ALL WIRING TOPOLOGIES AND ZONES SHALL BE TESTED ACCORDINGLY.

   f. WHEN INDICATED WITH AN "I" IN THE OCCUPANCY SENSOR SYMBOL, A INTERCONNECTED CONTROL SYSTEM SHALL BE PROVIDED AND INSTALLED. THIS INTERCONNECTED CONTROL SYSTEM SHALL PROVIDE/RESULT IN "DRY CONTACT CLOSURE DEMAND RESPONSE LOAD SHED" CONTROL FUNCTIONALITY. AT A MINIMUM, A CONTACT CLOSURE SHALL REDUCE THE LIGHTING POWER LOAD BY AT LEAST 15%. WHERE AN INTERCONNECTED CONTROL SYSTEM IS SERVING CORRIDORS AND/OR STAIRWAYS, THE SYSTEM SHALL ALSO PROVIDE DUAL MODE CORRIDOR/STAIRWAY CONTROL. PROVIDE CONTROL UNITS/POWER PACKS/INPUT INTERFACES/TIME CLOCK AND MISCELLANEOUS EQUIPMENT AS FOLLOWS:

      1. INPUT CONTROL UNIT INTERFACE DEVICE CAPABLE OF RECEIVING SEPARATE DRY CONTACT INPUTS ACTIVATING A DIMMED SCENE WITH AT LEAST A 15% LOAD REDUCTION AND, WHEN SERVING CORRIDORS AND/OR STAIRWELL CONTROLLERS, ACTIVATING EITHER MODE OF THE DUAL MODE CORRIDOR/STAIRWAY CONTROL SYSTEM.
      2. PLENUM-RATED INTERCONNECT WIRING MEETING ALL THE OTHER REQUIREMENTS OF THE DLCS MANUFACTURER SHALL BE RUN BETWEEN EACH INPUT CONTROL UNIT INTERFACE DEVICE TO A LOCATION IN THE ELECTRICAL ROOM CONTAINING THE LIGHTING BRANCH CIRCUIT PANEL. WHERE DUAL MODE CORRIDOR/STAIRWAY CONTROL IS ALSO REQUIRED - PROVIDE ADDITIONAL INTERCONNECT WIRING AND DEVICES AS REQUIRED TO ACCOMPLISH BOTH DEMAND RESPONSE AND DUAL MODE CONTROL.
      3. DEMONSTRATE DLCS RESPONSE TO A SIMULATED DEMAND RESPONSE REQUEST AS PART OF THE LIGHTING COMMISSIONING PROCESS. WHERE MORE THAN ONE WIRING TOPOLOGY AND/OR ZONE IS REQUIRED TO ACCOMPLISH DEMAND RESPONSE - ALL WIRING TOPOLOGIES AND ZONES SHALL BE TESTED ACCORDINGLY.

   g. WHERE INDICATED ON DRAWINGS, PROVIDE INTEGRATED DAYLIGHTING CONTROLS AS FOLLOWS:

      1. AUTOMATIC SWITCHING DAYLIGHTING CONTROLS SHALL BE PROVIDED TO SWITCH SELECTED FIXTURES AND/OR LAMPS OFF AND ON BASED UPON LIGHTING LEVELS PRESENT IN THE CONTROLLED SPACE. THE DAYLIGHTING CONTROLS SHALL BE CONNECTED TO THE CONTROL UNIT. THE SENSOR SHALL UTILIZE AN INTEGRAL PHOTO DIODE TO MEASURE AMBIENT LIGHT LEVELS. CONTROLS SHALL BE FULLY ADJUSTABLE FROM 1 TO 6,500 FOOTCANDLES AND SHALL BE PROVIDED WITH AN ADJUSTABLE TIME DELAY AND ADJUSTABLE DEAD BAND SETTINGS.
      2. AUTOMATIC DIMMING DAYLIGHTING CONTROLS SHALL BE PROVIDED TO CONTINUOUSLY DIM SELECTED FIXTURES/LAMPS UP AND DOWN BASED UPON LIGHTING LEVELS PRESENT IN THE CONTROLLED SPACE. THE SENSOR SHALL UTILIZE AN INTERNAL PHOTO DIODE TO MEASURE AMBIENT LIGHT LEVELS. 0-10 VOLT DIMMING CONTROLS SHALL RANGE FROM 0.2 VOLTS TO 10 VOLTS, WITH AMBIENT LIGHTING SET POINTS FROM 1-6,500 FOOTCANDLES.
      3. AUTOMATIC DAYLIGHTING CONTROLS SHALL BE CONNECTED TO CONTROL UNITS TO PERFORM THE FIXTURE SWITCHING/DIMMING REQUIREMENTS INDICATED BY THE DRAWINGS - CONNECTIONS DIRECTLY TO A BALLAST ARE NOT ALLOWED.
      4. DAYLIGHT SENSOR SHALL PROVIDE CONTROLS FOR UP TO THREE DISTINCT LIGHTING ZONES TO ALLOW SEPARATE CONTROL OF PRIMARY DAYLIT, SECONDARY DAYLIT, AND SKYLIT ZONES.

   h. PROVIDE CONTROL UNITS AND SYSTEM FUNCTIONALITY AS FOLLOWS:

      1. CONTINUOUS DIMMING CONTROLS: SYSTEM-BASED WALL OR CEILING MOUNTED OCCUPANCY SENSORS (CONTINUOUS DIMMED - AUTO ON 50%/MANUAL ON 100%) SHALL BE PROVIDED WITH CONTROL UNITS TO PERFORM THE FIXTURE DIMMING REQUIREMENTS INDICATED BY THE BALLAST AND FIXTURE TYPE. SWITCH LEG INDICATED OUTSIDE THE PARENTHESIS TO BE CONFIGURED AS "AUTO ON 50%/MANUAL ON 100%" FOR CONTINUOUS DIMMED. SWITCH LEGS INSIDE PARENTHESIS INDICATES A MANUAL ACTION REQUIRED TO INCREASE LIGHTING LEVELS ABOVE 50%. CONTROL UNITS WITH INTEGRAL TRANSFORMERS SHALL BE UTILIZED TO PROVIDE POWER TO OCCUPANCY SENSORS AND OTHER CONTROL DEVICES. CONTROL UNITS SHALL BE LOCATED WITHIN JUNCTION BOXES AND NOT EXPOSED IN THE CEILING SPACE. CONTROL UNIT SHALL BE 120/277 VOLT RATED WITH NO MINIMUM LOAD, COMPATIBLE WITH ALL THE SPECIFIED BALLASTS PROVIDED WITH A NEUTRAL CONNECTION (NO LEAKAGE TO GROUND) AND NO LEAKAGE TO LOAD IN THE "OFF" MODE. ADDITIONAL RELAY ZONES MAY BE REQUIRED FOR THE ADDITION OF PRIMARY DAYLIT, SECONDARY DAYLIT, AND PRIMARY SKYLIT UTILIZING THE SAME CONTROL CHANNEL. (I.E. EVEN THOUGH A SINGLE LETTER "a" IS INDICATED AT THE PRIMARY SENSOR), ADDITIONAL RELAYS WOULD BE REQUIRED FOR THE "a+" (PRIMARY SIDELIT DAYLIT ZONE), "a++" (SECONDARY SIDELIT DAYLIT ZONE), AND "a*" (SKYLIT DAYLIT ZONE). WHERE MORE THAN ONE CIRCUIT/THREE SWITCH LEGS/THREE RELAY ZONES ARE REQUIRED, PROVIDE ADDITIONAL FULL FEATURE CONTROL UNITS AS REQUIRED.
      2. WHERE ADDITIONAL 120/ 277 VOLT DEVICES, RECEPTACLES, OR BRANCH CIRCUITS ARE BEING CONTROLLED BY THE ROOM CONTROLLER, AN ADDITIONAL CONTROL UNIT SHALL BE PROVIDED AS REQUIRED.
      3. THE OCCUPANCY SENSOR CONTROLLED RECEPTACLE BRANCH CIRCUIT RELAY, CONNECTED TO THE SPACE'S DISTRIBUTED LIGHTING CONTROL OCCUPANCY SENSOR RELAY, SHALL TURN ON WHEN THE ROOM IS OCCUPIED, REGARDLESS OF THE CONFIGURATION OF THE LIGHTING CONTROL STATE - I.E. AUTO ON/MANUAL ON. SEE THE DISTRIBUTED LIGHTING CONTROL SPECIFICATION FOR MORE INFORMATION. EVEN THOUGH A SINGLE SYMBOL IS INDICATED, MULTIPLE RELAYS MAY BE REQUIRED TO CONTROL THE REQUIRED NUMBER OF SWITCHLEGS/CIRCUITS.
      4. LOW VOLTAGE WALL CONTROLS SHALL BE DECORA STYLE, LOW-VOLTAGE, MOMENTARY SWITCHES WITH COLOR TO MATCH OTHER WALL DEVICES/SWITCHES. LOWER CASE LETTERS INDICATE SWITCHING CONFIGURATION. PROVIDE SWITCHING OR DIMMING CONTROL DEVICES AS REQUIRED BY DRAWINGS.

         DIMMING - NUMBER OF SWITCHES AS REQUIRED - 4 ZONES/YOKE MAX. EACH CONTROL ZONE TO HAVE A DEDICATED RAISE AND LOWER BUTTONS. FACTORY STANDARD COLOR BY ARCHITECT. EACH MULTI-ZONE DIMMING CONTROL STATION SHALL BE PROVIDED WITH MASTER ON AND MASTER OFF BUTTON IN ADDITION TO THE INDIVIDUAL CONTROL ZONE BUTTONS.
      5. WHERE INDICATED, PROVIDE VANDAL RESISTANT, HIGH ABUSE SWITCH CONNECTED TO THE DLCS INPUT/OUTPUT INTERFACE DEVICE FOR ON/ OFF AND DIMMING CONTROLS. SWITCHES LOCATED IN HIGH ABUSE AREAS (EXTERIOR AREAS OR AREAS SUBJECT TO WASH-DOWN ETC.) OR IDENTIFIED ON PLANS AS HIGH-ABUSE SWITCHES SHALL BE VANDAL RESISTANT, STAINLESS STEEL, TOUCH SENSITIVE AND AVAILABLE WITH UP TO TWO BUTTONS IN A SINGLE GANG. EACH HIGH ABUSE SWITCH SHALL BE ABLE TO BE PROGRAMMED FOR ON, OFF, TOGGLE OR MAINTAIN OPERATION. SWITCHES MUST BE CAPABLE OF HANDLING ELECTROSTATIC DISCHARGES OF AT LEAST 30,000 VOLTS (1CMSPARK) WITHOUT ANY INTERRUPTION OR FAILURE IN OPERATION.
      6. WHERE INDICATED, PROVIDE A LOCKING SINGLE POLE SWITCH CONNECTED TO THE ROOM CONTROLLER VIA A INPUT/OUTPUT INTERFACE DEVICE FOR ON/OFF CONTROLS. DIRECT CONNECTION OF THE KEYED SWITCH ON THE LOAD SIDE OF THE CONTROLLER IS PROHIBITED. PROVIDE AT LEAST THREE (3) KEYS TO OWNER AT CONCLUSION OF PROJECT. ADJACENT SWITCH SHALL ONLY BRING LIGHTS FULL ON. KEYED SWITCH ALLOWS MANUAL OFF FUNCTIONALITY. DIMMER SWITCH ALLOWS AUTO-ON 50% OVERRIDE TO 100% ALL-ON AND SHALL NOT ALLOW LIGHTING LEVELS TO DECREASE IN ANY WAY.

SYMBOLS / REPRESENTATIVE GRAPHIC IMAGES

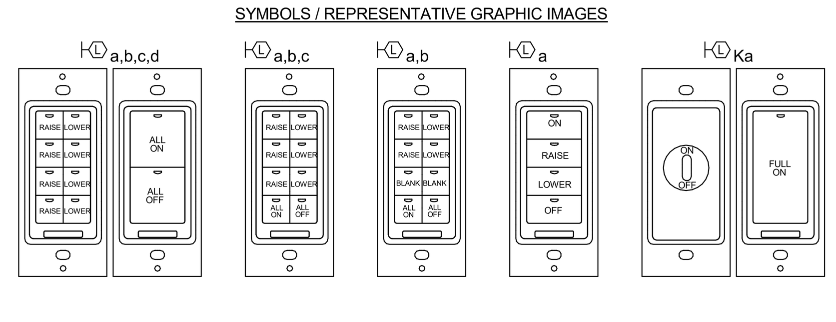

   i. WHEN LIGHTING SYSTEM IS INDICATED WITH A CONNECTION TO A REMOTE EMERGENCY POWER SOURCE (I.E. AN INVERTER OR GENERATOR) PROVIDE UL924 LISTED INTERFACE EQUIPMENT TO ALLOW THE OVERRIDE OF THE LOCAL SWITCHING AND/OR DIMMING CONTROLS DURING A POWER OUTAGE.

   j. WHEN LIGHTING FIXTURES/CONTROLS ARE PROVIDED WITH LUTRON 3-WIRE DIMMING BALLASTS, AN INTERFACE DEVICE SHALL BE PROVIDED TO ALLOW 0-10V CONTROL OF LUTRON 3-WIRE DIMMING BALLASTS. MOUNT INTERFACE IN A NEMA1 ENCLOSURE IN ACCESSIBLE CEILING SPACE ADJACENT TO ITS ASSOCIATED CONTROL UNIT.

   k. WHEN LIGHTING FIXTURES/CONTROLS ARE LINE VOLTAGE DIMMED OR PROVIDED ELECTRONIC LOW-VOLTAGE, MAGNETIC LOW-VOLTAGE, NEON/COLD CATHODE, LUTRON "TU-WIRE" DIMMING BALLASTS, AN INTERFACE DEVICE SHALL BE PROVIDED TO ALLOW LINE VOLTAGE CONTROL. MOUNT INTERFACE IN A NEMA1 ENCLOSURE IN ACCESSIBLE CEILING SPACE ADJACENT TO ITS ASSOCIATED CONTROL UNIT.

   l. WHEN AV SYSTEM INTERFACE IS INDICATED, PROVIDE TWO-WAY CAPABLE RS-232 COMMUNICATIONS INTERFACE TO ALLOW AV CONTROL SYSTEM TO CALL ADDRESSABLE LIGHTING/ROOM SCENES. COMMUNICATIONS INTERFACE SHALL PROVIDE FEEDBACK TO THE AV CONTROL SYSTEM FOR LIGHT LEVEL STATUS.

   m. WHEN MOVEABLE PARTITION INTERFACE IS INDICATED, PROVIDE ALL COMPONENTS, SENSORS, WIRING, POWER SUPPLIES AND PROGRAMMING NECESSARY TO MONITOR AND REPORT MOVEABLE PARTION(S) OPEN/CLOSED STATUS. DLCS SYSTEM SHALL AUTOMATICALLY ADOPT SINGLE ROOM OR MULTI-ROOM CONTROL PROFILES AS REQUIRED BY PARTITION STATUS.

   n. WHEN NETWORKED LIGHTING CONTROL RELAY PANEL(S) ARE INDICATED, PROVIDE ALL COMPONENTS, WIRING, AND PROGRAMMING NECESSARY TO INTEGRATE RELAY PANELS WITHIN THE DLCS SYSTEM.

5. GENERAL SYSTEM REQUIREMENTS:

   a. ALL EQUIPMENT SHALL FEATURE A PRE-SET DEFAULT OPERATION. UPON INITIAL POWER UP, THE SYSTEM SHALL AUTOMATICALLY IDENTIFY THE DEVICES ON THE LOCAL NETWORK, THEN ENTERS THE PRE-SET CONFIGURATION TO ALLOW BASIC OPERATION OF ALL DEVICES. IN MOST APPLICATIONS THE RELATIONSHIP BETWEEN QUANTITY OF LOADS, SWITCHES AND OCCUPANCY SENSORS WILL NOT REQUIRE ANY ADJUSTMENTS - ALTHOUGH AN ADJUSTMENT TO THE AUTOMATIC SETTINGS SHALL BE INCLUDED IN THE BASE BID.

   b. ALL EQUIPMENT SHALL FEATURE A CONFIGURATION (CONFIG) BUTTON ON MOST DEVICES THAT ALLOWS EASY ACCESS TO THE INTEGRATED AUTO-CONFIGURATION TECHNOLOGY TO MODIFY SYSTEM OPERATION. FUNCTIONALITY OF THE CONFIG BUTTON SHALL BE STANDARDIZED THROUGHOUT THE PRODUCT LINE, AS IS THE OPERATION OF THE CONFIG LED INDICATORS.

   c. NETWORK DLCS SYSTEM CONTROL/CONFIGURATION SOFTWARE SHALL BE PRE-CONFIGURED TO THE MAXIMUM EXTENT POSSIBLE OFF-SITE AT THE DLCS FACTORY OR ENGINEERING FACILITY. THE CONTRACTOR SHALL DOCUMENT EVERY NETWORK COMPONENT'S LOCATION (ROOM AND FLOOR NUMBER) AND ITS' RESPECTIVE SERIAL NUMBER OR OTHER DEVICE IDENTIFIER ON A FULL SIZE FLOOR PLAN IN PDF FORMAT. HANDWRITTEN DOCUMENTATION IS UNACCEPTABLE. THE PREFERRED ACCEPTABLE METHOD OF NETWORK COMPONENT DOCUMENTATION IS COLLECTION OF FACTORY-PROVIDED, SELF-ADHESIVE, BAR-CODE IDENTIFIERS DESIGNED TO BE REMOVED FROM NETWORK COMPONENTS AS THEY ARE INSTALLED IN THE FIELD. BAR CODES IDENTIFIERS SHALL BE APPLIED TO A PAPER COPY OF A FLOOR PLAN WHICH SHALL BE PROVIDED TO THE FACTORY FOR USE IN OFF-SITE DLCS NETWORK PROGRAMMING AND CONFIGURATION. THE RESULTS OF EITHER METHOD SHALL BE SCANNED AND SUBMITTED AS A PART OF THE PROJECT CLOSEOUT DOCUMENTATION.

   d. NETWORK SYSTEMS SHALL BE INSTALLED BY VENDOR-CERTIFIED CONTRACTOR FIELD PERSONNEL TO PERFORM NETWORK INSTALLATIONS INCLUDING ACCURATE, REPEATABLE COMMUNICATIONS CABLING TERMINATIONS (BOTH LAN AND MS/TP TYPE). INCLUDE CERTIFICATES FOR EACH CERTIFIED INSTALLER TO BE UTILIZED ON THE PROJECT AS A PART OF THE PROJECT SUBMITTALS. A CERTIFIED FIELD INSTALLER SHALL BE ON-SITE SUPERVISING COMMUNICATIONS CABLING AND CABLING TERMINATIONS AT ALL TIMES WHEN THIS WORK IS OCCURRING ON THE PROJECT.

   e. PRIOR TO NETWORK SYSTEM FACTORY START-UP, THE CONTRACTOR SHALL 1) TEST ALL COMMUNICATIONS CABLING FOR SHORTS, POLARITY REVERSALS AND BAD TERMINATIONS/CONNECTIONS AND MAKE NECESSARY REPAIRS AND 2) DEMONSTRATE FULL CONNECTIVITY TO ALL NETWORK AND LOCAL (IN-ROOM) DEVICES VIA MS/TP CAPTURE OR OTHER VENDOR SPECIFIC TESTING PROCESS. CONTRACTOR SHALL PROVIDE A TEST REPORT OUTLINING TEST COMPLETION AND ANY REPAIRS MADE AND CERTIFY THAT NETWORK DEVICE AND LOCAL DEVICE CONNECTIVITY HAS BEEN ACHIEVED PRIOR TO SCHEDULED FACTORY START-UP. BASED ON PAST PROJECT EXPERIENCE, FAILURE TO PERFORM ANY OF THE ABOVE STEPS HAS RESULTED IN BOTH VERY INEFFICIENT FACTORY START-UP AND PROJECT DELIVERY DELAY. ANY ADDITIONAL COSTS ARISING OUT OF A FAILURE TO COMPLETE THIS TESTING SHALL BE BORNE SOLELY BY THE CONTRACTOR.

   f. NETWORK SYSTEMS SHALL BE INSPECTED, STARTED UP, CONFIGURED AND PROGRAMMED BY FACTORY START-UP TECHNICIANS TO MEET THE INTENDED CONTROLS SCENARIOS AND FUNCTIONALITY DESIRED BY THE SYSTEM USER. WHERE NETWORK SYSTEMS ARE INTEGRATED WITH BUILDING MANAGEMENT SYSTEMS (BMS), THE FACTORY TECHNICIAN SHALL ASSIST THE CONTROLS INTEGRATOR WITH DLCS POINT INTEGRATION.

6. INSTALLATION OF CONTROL UNITS, OCCUPANCY/VACANCY SENSORS AND DAYLIGHTING CONTROLS:

   a. IT SHALL BE THE CONTRACTOR'S RESPONSIBILITY TO LOCATE AND AIM SENSORS IN THE CORRECT LOCATION REQUIRED FOR COMPLETE AND PROPER VOLUMETRIC COVERAGE PER THE MANUFACTURER'S RECOMMENDATIONS. ROOMS SHALL HAVE NINETY (90) TO ONE HUNDRED (100) PERCENT COVERAGE AND SHALL ACCOMMODATE ALL HABITS OF SINGLE OR MULTIPLE OCCUPANTS AT ANY LOCATION WITHIN THE ROOM. THE LOCATIONS AND QUANTITIES OF SENSORS SHOWN ON THE DRAWINGS ARE DIAGRAMMATIC AND INDICATE ONLY THE ROOMS THAT ARE TO BE PROVIDED WITH SENSORS. THE CONTRACTOR SHALL PROVIDE ADDITIONAL SENSORS AS REQUIRED TO PROPERLY AND COMPLETELY COVER THE RESPECTIVE ROOM. ADDITIONALLY, IT MAY BE NECESSARY FOR THE CONTRACTOR TO MAKE ADJUSTMENTS, CHANGE THE LOCATION OR TYPE OF SENSOR TO OBTAIN PROPER OPERATION IN A SPECIFIC ROOM. THE USE OF FACTORY SUPPLIED INTERNAL MASKING (PIR) SHALL BE PROVIDED/INSTALLED AS REQUIRED TO LIMIT DETECTION TO WITHIN THE CONTROLLED SPACE ONLY. THE CONTRACTOR SHALL HAVE FINAL RESPONSIBILITY FOR PROPER OPERATION OF THE SYSTEM IN EACH ROOM AND SHOULD THEREFORE MAKE LABOR ALLOWANCES FOR CHANGES AND ADJUSTMENTS.

   b. CEILING MOUNTED SENSORS SHOULD BE LOCATED IN THE SPACE TO BE COVERED, A MINIMUM OF 4', PREFERABLY 5', AWAY FROM THE LATCH SIDE OF THE DOOR, 2" TO 3" AWAY FROM THE WALL AND 3' TO 4' FROM AN AIR SUPPLY REGISTER. DO NOT MOUNT SENSORS OVER A DOORWAY OR BEHIND A FULL HEIGHT DOOR. SENSORS SHALL BE AIMED IN THE DIRECTION OF THE SPACE TO BE COVERED. DO NOT AIM SENSORS TOWARD A DOORWAY. THE USE OF FACTORY SUPPLIED INTERNAL MASKING (PIR) SHALL BE PROVIDED/INSTALLED AS REQUIRED TO LIMIT DETECTION TO WITHIN THE CONTROLLED SPACE ONLY.

   c. UNLESS OTHERWISE NOTED ON THE DRAWINGS, ALL SENSORS SHALL BE ADJUSTED FOR A TIME DELAY OF TWENTY (20) MINUTES.

   d. EACH DAYLIGHTING CONTROL SYSTEM/ZONE SHALL BE INSTALLED/ADJUSTED AS FOLLOWS:

      1. AUTOMATIC SWITCHING/DIMMING CONTROL PLACEMENT: IT IS IMPORTANT TO SELECT A LOCATION IN THE DAYLIGHTING ZONE WHERE THE DAYLIGHT CONTRIBUTION IS REPRESENTATIVE OF THE DAYLIGHTING THROUGHOUT THE ZONE. A GOOD LOCATION IS OFTEN BETWEEN THE WINDOW AND/OR DAYLIGHTING SOURCE AND THE FIRST ROW OF LIGHTING FIXTURES. AVOID INSTALLATIONS WITHIN 6'-0" OF A WINDOW, MORE THAN 15'-0" FROM A WINDOW, AND LESS THAN 4'-0" TO A LIGHTING FIXTURE WITH INDIRECT DISTRIBUTION.
      2. AUTOMATIC STEP-DIMMED/CONTINUOUS DIMMING CONTROLS SHALL NOT BE OPERATIONAL UNTIL THE LAMPS HAVE HAD AN OPPORTUNITY TO "BURN IN" - TYPICALLY A MINIMUM OF 10 HOURS - OR GREATER AS RECOMMENDED BY THE RESPECTIVE LAMP AND BALLAST MANUFACTURERS.
      3. AUTOMATIC SWITCHING/STEP-DIMMED CONTROL SETTINGS:

         CONTRACTOR TO UTILIZE THE PHOTOSENSOR AUTOMATIC CALIBRATION AND SETPOINT FUNCTIONS TO ESTABLISH THE OPTIMAL ON/OFF SETPOINTS, TIME DELAYS AND DEADBAND SETTINGS FOR EACH CONTROL ZONE INDICATED WITH DAYLIGHTING CONTROLS.
      4. AUTOMATIC CONTINUOUS DIMMING CONTROL SETTINGS SHALL BE SET USING AN ILLUMINANCE METER, AT A LOCATION FURTHEST FROM THE DAYLIGHT SOURCE, AS FOLLOWS:
         - NIGHT CONDITIONS/SETTING: SET AND ADJUST THE ILLUMINANCE LEVELS TO BE PER THE "TARGET ILLUMINATION" SYMBOL VALUE - SEE DRAWINGS. THE VALUE MUST BE AT OR BELOW THE "TARGET ILLUMINATION" SYMBOL VALUE.
         - DAY CONDITIONS/SETTING: WITH WINDOW COVERINGS IN THE "OPEN" POSITION AND THE DAYLIGHT CONTRIBUTION (LIGHTS OFF) AT A MAXIMUM OF 75% OF THE "TARGET ILLUMINATION" SYMBOL VALUE, SET AND ADJUST THE COMBINED ARTIFICIAL ILLUMINATION AND DAYLIGHTING ILLUMINATION TO MEET THE SYMBOL VALUE AT THE SAME LOCATION/POSITION OF THE NIGHT SETTINGS.
         - RAMP UP/DOWN RATES/CUT-OF TIME DELAY

   e. IT IS THE CONTRACTOR'S RESPONSIBILITY TO ARRANGE A PRE-INSTALLATION MEETING WITH THE MANUFACTURER'S FACTORY AUTHORIZED REPRESENTATIVE, AT THE PROJECT, TO VERIFY PLACEMENT OF SENSORS AND INSTALLATION CRITERIA.

   f. PROPER JUDGMENT MUST BE EXERCISED IN EXECUTING THE INSTALLATION SO AS TO ENSURE THE BEST POSSIBLE INSTALLATION IN THE AVAILABLE SPACE AND TO OVERCOME LOCAL DIFFICULTIES DUE TO SPACE LIMITATIONS OR INTERFERENCE OF BUILDING STRUCTURAL COMPONENTS. THE CONTRACTOR SHALL ALSO PROVIDE, AT THE PROJECT, THE TRAINING NECESSARY TO FAMILIARIZE THE OWNER'S PERSONNEL WITH THE OPERATION, USE, MAINTENANCE, ADJUSTMENT, AND PROBLEM SOLVING DIAGNOSIS OF THE OCCUPANCY SENSING DEVICES AND SYSTEMS.

   g. CONNECT ALL DEVICES AS REQUIRED. UNLESS PROHIBITED BY LOCAL CODE, CONNECTIONS SHALL BE MADE WITH PLENUM-RATED CABLING ROUTED NEATLY INTO AND ABOVE THE ACCESSIBLE CEILING. CABLES SHALL BE SUPPORTED WITH DEDICATED SUPPORT WIRES AND J-HOOKS. WHERE LOCAL CODE REQUIRES LOW VOLTAGE CABLING TO BE ROUTED IN CONDUIT, INCLUDE ALL COSTS IN BASE BID TO PROVIDE APPROPRIATELY-SIZED SYSTEM OF CONDUITS AND JUNCTION BOXES TO ROUTE CONNECTION CABLING. J-BOXES/CONTROLLERS SHALL BE LOCATED ABOVE ACCESSIBLE CEILINGS AND NEVER IN HARD-LID CEILING AREAS. PRE-TERMINATED CABLING SHALL BE PROVIDED BY THE SYSTEM MANUFACTURER AND SHALL BE GREEN IN COLOR UNLESS IT IS ROUTED IN AN EXPOSED CEILING CONDITION WHERE IT SHALL BE BLACK, WHITE OR GREY AS DIRECTED BY THE ARCHITECT.

   h. INSTALL LINE VOLTAGE CONDUCTORS, LOW VOLTAGE CONDUCTORS AND COMMUNICATIONS CABLING BETWEEN LIGHTING FIXTURES AND DLCS COMPONENTS PER THE DLCS MANUFACTURER'S RECOMMENDATIONS REGARDING CONDUCTOR ROUTING, CONDUCTOR SEPARATION AND CONDUCTOR TERMINATIONS. CONTRACTOR SHALL UTILIZE INSTALLATION MEANS AND METHODS THAT DO NOT COMPROMISE THE DLCS SYSTEM WARRANTEE.

   i. WHERE CODE OR LOCAL AHJ REQUIREMENTS REQUIRE THE INSTALLATION OF ALL LOW-VOLTAGE CONDUCTORS TO BE INSTALLED IN CONDUIT - CONTRACTOR TO PROVIDE ALL REQUIRED MANUFACTURER SPECIFIC EQUIPMENT JUNCTION BOXES AND CONDUIT ADAPTERS AS REQUIRED.

   j. UNLESS PROHIBITED BY LOCAL CODE, ALL CONTROL UNITS SHALL BE PLENUM-RATED. WHERE CONTROL UNITS ARE LOCATED IN EXPOSED CEILING SPACES, INCLUDE ALL COSTS IN BASE BID TO PROVIDE APPROPRIATELY-SIZED VENTILATED CONTROL UNIT ENCLOSURES FOR CONCEALMENT. COLOR OF ENCLOSURE PER ARCHITECT.

   k. UPON COMPLETION OF THE INSTALLATION, THE SYSTEM SHALL BE COMPLETELY COMMISSIONED BY THE MANUFACTURER'S FACTORY AUTHORIZED TECHNICIAN WHO WILL VERIFY ALL ADJUSTMENTS AND SENSOR PLACEMENT TO ENSURE A TROUBLE-FREE INSTALLATION. THIS COMMISSIONING EFFORT SHALL BE PERFORMED IN A MANNER THAT MEETS ALL APPLICABLE FEDERAL, STATE, LOCAL ENERGY CODES AND/OR LEED CERTIFICATION PROGRAMS. THE CONTRACTOR SHALL BE RESPONSIBLE FOR FILLING OUT ALL APPLICABLE PAPERWORK AND/OR FORMS. CONTRACTOR TO PROVIDE A COPY OF THE COMPLETED FORMS TO THE ENGINEER OF RECORD PRIOR TO THE PUNCH LIST SITE VISIT FOR REVIEW AND POSSIBLE RECOMMENDATION OF SETTING REVISIONS.

   CONTRACTOR SHALL INCLUDE ALL COST IN THE BASE BID AND PROVIDE THE FOLLOWING WORK FOR EVERY CONTROL ZONE:
   - INITIAL SETTINGS AS INDICATED ABOVE.
   - COMMISSIONING OF EACH LIGHTING CONTROL DEVICE/ZONE PER NOTES BELOW.
   - A FOLLOW UP SETTING(S) ADJUSTMENT, AS DICTATED BY THE ELECTRICAL ENGINEER, BASED UPON A REVIEW OF THE RESULTS OF THE CONTRACTOR'S COMMISSIONING EFFORT AND FINAL PUNCH LIST.

   l. REGARDLESS OF THE LESSER REQUIREMENTS OF ANY AHJ COMMISSIONING FORMS, THE FOLLOWING MINIMUM COMMISSIONING ITEMS MUST BE COMPLETED FOR EACH DEVICE/LIGHTING CONTROL ZONE:
   - MEASURED LIGHTING POWER (KW) AT THE FULLY DIMMED CONDITION.
   - MEASURED LIGHTING POWER (KW) AT FULL LIGHT OUTPUT.
   - ONLY LIGHTING FIXTURES IN THE DAYLIGHTING ZONE ARE AFFECTED BY THE DAYLIGHTING CONTROLS.
   - LIGHTING POWER IS REDUCED BY AT LEAST 50% IN WINDOW DAYLIT AREAS AND 65% IN SKYLIGHT DAYLIT AREAS.
   - DIMMING SYSTEMS PROVIDE FLICKER FREE OPERATION.
   - ILLUMINATION LEVELS, LOCATIONS OF MEASUREMENTS, SPECIFIC DEVICE SETTINGS ARE DOCUMENTED ON AS-BUILTS.

   m. AS PART OF THE "RECORD DRAWINGS", INDICATE ON THE REFLECTED CEILING PLAN THE EXACT LOCATION (CEILING TILE OR ACCESS PANEL) OF ANY ABOVE CEILING DEVICE.

   n. WHEN THE PROJECT REQUIRES TWENTY-FIVE (25) OR MORE CEILING MOUNTED SENSORS, CONTRACTOR TO PROVIDE A REMOTE CONTROL PROGRAMMING/CONTROL DEVICE, AND HAND IT TO THE OWNER AT THE END OF THE PROJECT.

   o. INCLUDE ALL COSTS TO PROVIDE USER-TRAINING AS OUTLINED ELSEWHERE IN ANY PROJECT SPECIFIC COMMISSIONING SPECIFICATION. WHERE A NETWORK DLCS IS SPECIFIED, MINIMUM TRAINING SHALL INCLUDE 6 HOURS OF ON-SITE USER TRAINING FOR A MINIMUM OF 3 PERSONNEL.

DISTRIBUTED LIGHTING CONTROL SYSTEM REQUIREMENTS:

1. THE CONTRACTOR SHALL BE RESPONSIBLE FOR THE FURNISHING OF ALL MATERIAL, LABOR, EQUIPMENT, AND SERVICES, IN CONNECTION WITH THE INSTALLATION OF A COMPLETE AND FULLY FUNCTIONING AND CODE COMPLIANT INSTALLATION.
2. IT IS THE INTENT OF THE CONTRACT DOCUMENTS, WHICH ARE PRESENTED IN A DIAGRAMMATIC FORMAT, TO PROVIDE CONTRACTOR INFORMATION THAT SUPPLEMENTS AND ENHANCES THE GENERALLY ACCEPTED CONSTRUCTION MEANS, METHODS, TECHNIQUES, SEQUENCES AND PROCEDURES EMPLOYED IN CONNECTION WITH INSTALLATION OF THIS TYPE OF PRODUCT/SYSTEM.
3. THE CONTRACTOR SHALL ALSO INCORPORATE THE REQUIREMENTS OF THE MANUFACTURER'S INSTALLATION INSTRUCTIONS/WARRANTY REQUIREMENTS AS PART OF THE REQUIREMENTS OF THE CONSTRUCTION DOCUMENTS. IN THE EVENT OF A CONFLICT BETWEEN THE CONTRACT DOCUMENT REQUIREMENTS AND THE MANUFACTURER'S INSTALLATION REQUIREMENTS, THE MORE STRINGENT REQUIREMENTS SHALL APPLY - UNLESS THE MORE STRINGENT REQUIREMENT VOIDS APPLICABLE WARRANTIES OR VIOLATES THE REQUIREMENTS OF THE LOCAL AUTHORITY HAVING JURISDICTION. ANY SUCH CONFLICT SHALL IMMEDIATELY BE BROUGHT TO THE ATTENTION OF THE ENGINEER IN WRITING THROUGH THE FORMAL RFI PROCESS.
4. REFER TO THE ASSOCIATED SCHEDULES, SCHEMATICS, DRAWINGS, AND SPECIFICATIONS FOR DETAILED INFORMATION/REQUIREMENTS ON THIS PRODUCT/SYSTEM.
5. SHOP DRAWINGS AND COMPONENT SUBMITTALS SHALL BE SUBMITTED PER THE GENERAL SPECIFICATION REQUIREMENTS SHOWING ALL COMPONENTS, WIRING CONFIGURATIONS AND PROGRAMMING SCHEDULES. SCALED SHOP DRAWINGS DEPICTING/IDENTIFYING ALL SYSTEM COMPONENT LOCATIONS SHALL BE PROVIDED. SUBMITTALS SHALL BE MADE SPECIFIC TO THE PROJECT - GENERIC SUBMITTALS AND SUBMITTALS WITHOUT SCALED SHOP DRAWINGS SHALL BE REJECTED.

IDENTIFICATION STAMP
DIV. OF THE STATE ARCHITECT
APP: 02-118630 INC:
REVIEWED FOR
SS ☐ FLS ☐ ACS ☑
DATE: 04/13/2021

OFFICE OF THE STATE FIRE MARSHAL
APPROVED FIRE AND PANIC ONLY
Approval of this plan does not authorize or approve any omission or deviation from applicable regulations. Final approval is subject to field inspection. One set of approved plans shall be available on the project site at all times.
PERMIT NO.: 20-N-2332-CP
REVIEWED BY: LITO CATAYLO, OSFM
DATE: 4/ 1 /2021

GENERAL SERVICES
Department of General Services
State of California
Real Estate Services Division
Project Management & Development Branch
707 Third Street, Suite 4-105
West Sacramento, California 95605

NICHOLS MELBURG & ROSSETTO
ARCHITECTS + ENGINEERS
300 Knollcrest Drive
Redding, CA. 96002
(530) 222-3300 (530) 222-3538 FAX
http://www.nmrdesign.com

Copyright © 2019
All ideas, designs, arrangements and plans indicated or represented by this drawing are owned by, and the property of, NICHOLS, MELBURG and ROSSETTO and were created, evolved and developed for use on, and in conjunction with, the specified project. None of such ideas, designs, arrangements or plans shall be used by, or disclosed to any person, firm or corporation for any purpose whatsoever without the written permission of NICHOLS, MELBURG and ROSSETTO.

LICENSE STAMPS
REGISTERED PROFESSIONAL ENGINEER
RAYMOND W. SWARTZ
No. E15610
Ex. 12/31/2021
ELECTRICAL
STATE OF CALIFORNIA
Date Signed:
3/25/2021

CONSULTANT
tk1sc
COLLABORATIVE
11870 Pierce Street, Suite 160
Riverside, California 92505
951.299.4160 www.tk1sc.com
Project Leader - Jerry Leonhardt
Electrical Lead - Reid Cordry
tk1sc Job #:2019-0228A

DRAWING STATUS
CONSTRUCTION DOCUMENTS

ISSUE

No.	Date	Description
1	10/20/2020	INITIAL PLAN REVIEW
2	01/22/2021	AGENCY RESUBMITTAL
3	03/22/2021	AGENCY RESUBMITTAL

If drawing is not 30" x 42" it is a reduced print

PROJECT
RESIDENTIAL CENTER, UKIAH: REPLACEMENT OF EXISTING RESIDENTIAL CENTER
440 EAST HILL ROAD
WILLITS, CALIFORNIA 95490
MENDOCINO COUNTY
CALIFORNIA CONSERVATION CORP

Supervisor	Designed	Drawn
		Author

DSA Application No.
02-118630

SHEET TITLE
DISTRIBUTED LIGHTING CONTROLS

DGS Project Number	NMR Project Number
000000000001826	18-6456

Reference North: NORTH
Sheet Scale: 12" = 1'-0"
Sheet Number: E503

ISSUE DATE
July 9, 2021

Plot Date: 3/22/2021 8:59:59 AM
File Name: BIM 360://CCC Willits Residential Center/E_CCC Willits_COMMON_2019-0228A.rvt

AREA TYPE	OCC SENSOR				INTERIOR DAYLIGHT SENSOR			EXTERIOR PHOTOCELL		AUTO TIME CNTL			LOCAL CNTL		SYSTEM		NOTES	REMARKS
ALL VALUES ARE BASED ON CALIFORNIA TITLE 24 2016	AUTO ON (PERCENTAGE OF NOMINAL FC)	MANUAL ON WHEN SWITCH / BUTTON IS PRESSED	DELAY TO REDUCED OUTPUT OR OFF	PARTIAL OFF AT NORMAL HOURS	AUTO OFF AT TARGET FC	AUTO DIM AT TARGET FC	DAYLIGHT HARVEST / NOMINAL FOOTCANDLE & METER HEIGHT	EXTERIOR PHOTOCELL ON	EXTERIOR PHOTOCELL OFF	NORMAL HOURS / ASTRO TIME ON	AFTER HOURS / ASTRO TIME OFF	CANNOT EXCEED 2 HOURS PER §130.1(c)3.B AFTER HOURS OVERRIDE	ON / OFF / RAISE / LOWER DIMMING	SCENE SELECTOR	PLUG LOAD CONTROL	DEMAND RESPONSE LIGHTING REDUCTION 15% AVG.	PROGRAMMING NOTES SEE BELOW	PLEASE REFER TO SPECIFICATIONS FOR ADDITIONAL INFORMATION. O = INDICATES OPTIONAL COMPLIANCE. REFER TO NOTES. ● = INDICATES REQUIRED COMPLIANCE ALL LIGHTING WITHIN DAYLIGHTING ZONES SHALL BE COMMISSIONED AT NIGHT, WITH NO DAYLIGHT CONTRIBUTION, IN ORDER TO ESTABLISH BASELINE ILLUMINATION LEVELS. "NORMAL HOURS" REFERS TO THE BEGINNING OF NORMAL OPERATING HOURS WITHIN A GIVEN AREA. "AFTER HOURS" REFERS TO THE END OF NORMAL OPERATING HOURS WITHIN A GIVEN AREA. WHERE EXTERIOR PHOTOCELL CONTROL IS INDICATED, PLEASE PROVIDE EXTERIOR NORTH FACING DAYLIGHT SENSOR
COMMERCIAL BLDG >10,000 sq ft	-	-	-	-	-	-	N/A	-	-	-	-	-	-	-	●	●	F	DEMAND RESPONSE REQUIRED. SPACES WITH TOTAL LIGHTING LOAD LESS THAN 0.5W/SQFT ARE EXEMPT.
AREAS WITH 1-2 LAMP SINGLE LUMINAIRE <100 SQ FT	100%	-	20 MIN	-	-	-	30 FC +30" AFF	-	-	-	-	-	-	-	-	-	-	SPACES WITH MORE THAN 100 SQ FT WILL NEED CONTINUOUS, FULL RANGE DIMMING.
> 0.7 W PER SQ FT	70%	100%	20 MIN	-	-	●	35 FC +30" AFF	-	-	-	-	-	●	○	●	●	A,B,D, E,F	CONFIRM SWITCH TYPE PREFERENCE WITH OWNER PRIOR TO RELEASE OF ORDER. MULTI-ZONE LIGHTING SCENARIO WILL REQUIRE SCENE SELECTOR. PROVIDE SCENE SELECTOR SWITCH IF MORE THAN ONE LIGHTING PRESET IS REQUIRED (E.G. "AV MODE"). PROVIDE SEPARATE CONTROL ZONE FOR LIGHTING ADJACENT TO PROJECTION SCREENS OR TV MONITORS. CONFIRM IF A DATA COMMUNICATION BETWEEN AV AND LIGHTING SYSTEMS ARE REQUIRED.
COPY ROOM	100%	-	5 MIN	-	-	-	35 FC +30" AFF	-	-	-	-	-	●	-	●	●	F	
CORRIDOR	100%	-	-	50% 10 MIN	-	-	10 FC +0" AFF	-	-	08:00	08:00	●	●	-	-	●	C, J	
COMMERCIAL	100%	-	-	50% 10 MIN	-	-	10 FC +0" AFF	-	-	-	-	-	●	-	-	●	C, J	
CORRIDOR	100%	-	5 MIN	-	-	-	35 FC +30" AFF	-	-	-	-	-	●	-	-	-	-	
DAS, IDF, MDF & MPOE ROOMS	100%	-	20 MIN	-	-	●	30 FC +0" AFF	-	-	-	-	-	●	●	-	-	A,B,C,D	
ELECTRICAL ROOM	100%	-	20 MIN	-	-	●	50 FC +0" AFF	-	-	-	-	-	●	●	-	-	A,B,C,D	
LOBBY OR ATRIUM	100%	100%		50% 20 MIN	-	-	10 FC +0" AFF	-	-	06:00	18:00	●	●	-	-	-	A,C,D,F,J	ALL LIGHTING TRANSITIONS DURING OPERATING HOURS SHALL BE MINIMUM 5-MINUTE FADE TIMES.
OFFICE, PRIVATE, LARGE	100%	-	-	50% 20 MIN	●	-	10 FC +0" AFF	-	-	-	-	-	●	-	-	●	C	LIGHTS TO REMAIN ON AT MIN. 50%; 100% WHEN OCCUPANCY DETECTED. FOR RESIDENTIAL AND HOTEL APPLICATIONS, STAIRWELLS MAY REMAIN ON.
>250 SQ FT	100%	-	5 MIN	-	-	-	10 FC +0" AFF	-	-	-	-	-	-	-	-	-	-	
OFFICE / ADMINISTRATION / LOUNGE / BREAK ROOM / WORKROOM	100%	-	-	50% 20 MIN	●	●	30 FC +0" AFF	-	-	07:00	18:00	-	-	-	-	●	J	
OPEN FLOOR PLAN	100%	-	-	50% 20 MIN	●	●	30 FC +0" AFF	-	-	07:00	-	-	-	-	-	●	J	

Exterior Lighting, Timeclock / Photocell Control

EXTERIOR LIGHTING POLE MOUNTED ≤24 FT & >75W	100%		50% 5 MIN	50% Curfew if Req'd	-	-	2 FC +0"	●	-	-	DAWN	-	-	-				OCCUPANCY SENSOR REQUIRED; LIGHTING SHALL REMAIN ON FROM DUSK UNTIL DAWN, REDUCED OUTPUT BETWEEN 40% AND 80% WHEN VACANT OR AFTER LOCAL CURFEW, IF REQUIRED. NO MORE THAN 1,500W OF LIGHTING CONTROLLED TOGETHER.
EXTERIOR LIGHTING POLE MOUNTED ≤24 FT & <75W	-	-	-	50% Curfew if Req'd	-	-	2 FC +0"	●	-	-	DAWN	-	-	-				OCCUPANCY SENSOR NOT REQUIRED; LIGHTING SHALL REMAIN ON FROM DUSK UNTIL DAWN, REDUCED OUTPUT AFTER LOCAL CURFEW, IF REQUIRED. NO MORE THAN 1,500W OF LIGHTING CONTROLLED TOGETHER.
EXTERIOR LIGHTING POLE MOUNTED >24 FT	-	-	-	50% Curfew if Req'd	-	-	2 FC +0"	●	-	-	DAWN	-	-	-				OCCUPANCY SENSOR NOT REQUIRED; LIGHTING SHALL REMAIN ON FROM DUSK UNTIL DAWN, REDUCED OUTPUT AFTER LOCAL CURFEW, IF REQUIRED. NO MORE THAN 1,500W OF LIGHTING CONTROLLED TOGETHER.
EXTERIOR LIGHTING WALL MOUNT AND BOLLARD >24 FT & >30W	100%	-	50% 5 MIN	50% Curfew if Req'd	-	-	1 fc AVG +0"	●	-	-	DAWN	-	-	-				OCCUPANCY SENSOR REQUIRED; LIGHTING SHALL REMAIN ON FROM DUSK UNTIL DAWN, REDUCED OUTPUT BETWEEN 40% AND 80% WHEN VACANT OR AFTER LOCAL CURFEW, IF REQUIRED. NO MORE THAN 1,500W OF LIGHTING CONTROLLED TOGETHER.
EXTERIOR LIGHTING WALL MOUNT AND BOLLARD >24 FT & ≤30W	-	-	-	50% Curfew if Req'd	-	-	1 fc AVG +0"	●	-	-	DAWN	-	-	-				OCCUPANCY SENSOR NOT REQUIRED; LIGHTING SHALL REMAIN ON FROM DUSK UNTIL DAWN, REDUCED OUTPUT AFTER LOCAL CURFEW, IF REQUIRED. NO MORE THAN 1,500W OF LIGHTING CONTROLLED TOGETHER.
EXTERIOR FAÇADE & OUTDOOR DINING	100% (OPTION)	-	-	50% Curfew if Req'd	-	-	1 fc AVG +0"	●	-	-	50% 02:30a OFF AT DAWN	-	-	-				OCCUPANCY SENSOR OR TIMECLOCK REQUIRED; LIGHTING SHALL REMAIN ON FROM DUSK UNTIL DAWN WITH PART-NIGHT OUTDOOR LIGHTING CONTROL; REDUCED OUTPUT AFTER LOCAL CURFEW, IF REQUIRED.
EXTERIOR SIGNAGE	-	-	-	50% Curfew if Req'd	-	-	-	●		-	02:30	-	-	-			J	

PROGRAMMING NOTES

NOTES: A. PROVIDE DAYLIGHTING CONTROL FOR PRIMARY AND SECONDARY DAYLIT OR SKYLIT ZONES WERE REQUIRED. DAYLIGHTING IS NOT NECESSARY WHEN AREAS DO NOT INCLUDE SKYLIGHTS OR GLAZING < 24 SQ FT OR SKYLIT+PRIMARY SIDELIT ZONE IS LESS THAN 120W. LUMINAIRES IN OR AT LEAST 50% WITHIN DAYLIGHTING ZONES MUST BE CONTROLLED.

B. CONTROLLED BY OCCUPANCY SENSOR: AUTO ON AT PERCENTAGE AS NOTED, MANUAL ON AT 100%; UNLESS OVERRIDDEN BY DAYLIGHTING SENSORS.

C. MANUAL CONTROL WALL STATIONS FOR THESE AREAS SHALL BE LOCATED IN THE NEAREST BACK OF HOUSE CLOSET, CONTROL BOOTH, ELECTRICAL ROOM, ETC. TO PREVENT UNAUTHORIZED USERS FROM ADJUSTING LIGHTING LEVELS.

D. CONFIGURE LIGHTING CONTROL TO PROVIDE PROPORTIONATE RAISE / LOWER OF ALL ROOM LIGHTING TOGETHER, REGARDLESS OF LOCATION IN DAYLIGHTING AND NON-DAYLIGHTING ZONES WHERE THEY OCCUR.

E. PROVIDE RS-232 OR ETHERNET CONNECTION TO AV SYSTEM TO ALLOW RECALL OF LIGHTING PRESETS BY AV SYSTEM WITHIN THIS ROOM, IF REQUESTED BY OWNER.

F. PROVIDE CONTROLLED RECEPTACLES IN THIS ROOM AS REQUIRED. CONTROLLED RECEPTACLE MUST BE WITHIN 6'-0" OF UNCONTROLLED RECEPTACLE.

G. PROVIDE MOMENTARY CONTACT CLOSURE FROM FACP TO FORCE ALL LIGHTING IN THIS AREA TO 100% DURING AN ALARM EVENT. AUTOMATICALLY RESTORE LIGHTING TO NORMAL WHEN EVENT HAS CLEARED.

H. LIGHTING IN THIS SPACE MAY BE CONTROLLED FROM A STAGE LIGHTING SYSTEM. THE STAGE LIGHTING SYSTEM SHALL BE PROVIDED WITH A TITLE 24 COMPLIANT LIGHTING CONTROL PROCESSOR AND COMPATIBLE OCCUPANCY AND DAYLIGHT SENSORS AS

I. NOT USED

J. CONFIRM OPERATING HOURS WITH OWNER PRIOR TO FINAL PROGRAMMING.

K. REQUIRES CONNECTION TO BUILDING AUTOAMTION SYSTEM (BAS) WHEN SUCH SYSTEM IS PRESENT.

EXCEPTIONS: SIGNS, FACADE LIGHTING, STATUTES, BRIDGES, HEALTH OR LIFE SAFETY LIGHTING.
LUMINAIRES THAT ILLUMINATE PUBLIC RIGHT OF WAY ROADS, SIDEWALKS, AND BIKEWAYS.
EXTERIOR WALL: OUTDOOR LUMINAIRES WITH BOTTOMS LESS THAN OR EQUAL TO 24' ABOVE THE GROUND NEED MOTION OR OTHER CONTROLS.
OUTDOOR LIGHTING NEEDS TO BE CONTROLLED BY ASTRONOMICAL TIME CLOCK AND AUTOMATICALLY SHUT OFF BY PHOTOCELL.

IDENTIFICATION STAMP
DIV. OF THE STATE ARCHITECT
APP: 02-118630 INC:
REVIEWED FOR
SS ☐ FLS ☐ ACS ☑
DATE: 04/13/2021

OFFICE OF THE STATE FIRE MARSHAL
APPROVED FIRE AND PANIC ONLY
Approval of this plan does not authorize or approve any omission or deviation from applicable regulations. Final approval is subject to field inspection. One set of approved plans shall be available on the project site at all times.
PERMIT NO.: 28 N 2332 CP
REVIEWED BY: LEO CATAYLO, OSFM
DATE: 4/1/2021

GENERAL SERVICES
Department of General Services
State of California
Real Estate Services Division
Project Management & Development Branch
707 Third Street, Suite 4-105
West Sacramento, California 95605

NICHOLS MELBURG & ROSSETTO
ARCHITECTS + ENGINEERS
300 Knollcrest Drive
Redding, CA. 96002
(530) 222-3300 (530) 222-3538 FAX
http://www.nmrdesign.com

Copyright © 2019
All ideas, designs, arrangements and plans indicated or represented by this drawing are owned by, and the property of, NICHOLS, MELBURG and ROSSETTO and were created, evolved and developed for use on, and in connection with, the specified project. None of such ideas, designs, arrangements or plans shall be used by, or disclosed to any person, firm or corporation for any purpose whatsoever without the written permission of NICHOLS, MELBURG and ROSSETTO.

LICENSE STAMPS

REGISTERED PROFESSIONAL ENGINEER RAYMOND W. SWEETSER No. E15610 12/31/2021 ELECTRICAL STATE OF CALIFORNIA
Date Signed: 3/25/2021

CONSULTANT
tklsc COLLABORATIVE
11870 Pierce Street, Suite 160
Riverside, California 92505
951.299.4160 www.tk1sc.com
Project Leader - Jerry Leonhardt
Electrical Lead - Reid Cordry
tk1sc Job #:2019-0228A

DRAWING STATUS
CONSTRUCTION DOCUMENTS

ISSUE

No.	Date	Description
1	10/20/2020	INITIAL PLAN REVIEW
2	01/22/2021	AGENCY RESUBMITTAL
3	03/22/2021	AGENCY RESUBMITTAL

If drawing is not 30" x 42" it is a reduced print

PROJECT
RESIDENTIAL CENTER, UKIAH: REPLACEMENT OF EXISTING RESIDENTIAL CENTER
440 EAST HILL ROAD
WILLITS, CALIFORNIA 95490
MENDOCINO COUNTY
CALIFORNIA CONSERVATION CORP

Supervisor	Designed	Drawn
		Author

DSA Application No.
02-118630

SHEET TITLE
SEQUENCE OF OPERATION

DGS Project Number: 0000000000001826
NMR Project Number: 18-6456

Reference North: NORTH
Sheet Scale:
Sheet Number: E504

ISSUE DATE
July 9, 2021

Plot Date: 3/22/2021 9:00:00 AM
File Name: BIM 360://CCC Willits Residential Center/E_CCC Willits_COMMON_2019-0228A.rvt

STATE OF CALIFORNIA
Electrical Power Distribution
NRCC-ELC-E
CALIFORNIA ENERGY COMMISSION

CERTIFICATE OF COMPLIANCE			NRCC-ELC-E
Project Name:	Replacement of Existing Residential Center	**Report Page:**	**(Page 3 of 5)**
Project Address:	440 East Hill Road	**Date Prepared:**	10/20/2020

G. SEPARATION OF ELECTRICAL CIRCUITS FOR ENERGY MONITORING

This table includes entirely new or complete replacement electrical power distribution systems to demonstrate compliance with §130.5(b). Any load types that are not included in the service do not need to be shown.

01	02	03	04	05	
Load Type per Table 130.5-B [1]	Minimum Required Separation of Load per Table 130.5-B	Compliance Method[2]	Location of Requirements in Construction Documents	Field Inspector	
				Pass	Fail
MSA					
Lighting including exit, egress and exterior	All lighting disaggregated by floor, type or area	Method 1		☐	☐
HVAC systems and components	All HVAC in aggregate and each HVAC load rated at least 50 kVA	Method 1		☐	☐
Plug Loads and appliances less than 25kVA	All plug loads separated by floor, type or area Groups of plug loads exceeding 25 kVA connected load in an area less than 5000 sf	Method 1		☐	☐
Charging stations for electrical vehicle	All loads in aggregate	Method 1		☐	☐

** NOTES: If "Other*" is selected under Compliance Method above, please indicate how compliance has been achieved in the space provided below.*

[1] FOOTNOTES: For each separate load type, up to 10% of the connected load may be of any type.
[2] Method 1: Switchboards/ motor control centers/ panelboard loads disaggregated for each load type.
Method 2: Switchboards/ motor control centers/ panelboard supply other distribution equipment with loads disaggregated for each load type.
Method 3: Branch circuits serve load types individually and provisions for adding future branch circuit monitoring.
Method 4: Complete metering system measures and reports loads by type.
See Chapter 8 of the Nonresidential Compliance Manual for more detail on Compliance Methods.

H. VOLTAGE DROP

This table includes entirely new or complete replacement electrical power distribution systems, or alterations that add, modify or replace both feeders and branch circuits to demonstrate compliance with §130.5(c). For alterations, only the altered circuits must demonstrate compliance per §141.0(b)2Pii

01	02	03	04	05	
Electrical Service Designation/Description	Combined Voltage Drop on Installed Feeder/Branch Circuit Conductors Compliance Method	Location of Voltage Drop Calculations[1]	Sheet Number for Voltage Drop Calculations in Construction Documents	Field Inspector	
				Pass	Fail

Registration Number: | Registration Date/Time: | Registration Provider: EnergySoft

CA Building Energy Efficiency Standards - 2019 Nonresidential Compliance | Report Version: 2019.0.001 Schema Version: rev 20190401 | Report Generated: 2020-10-20 08:49:31

STATE OF CALIFORNIA
Electrical Power Distribution
NRCC-ELC-E
CALIFORNIA ENERGY COMMISSION

CERTIFICATE OF COMPLIANCE			NRCC-ELC-E
Project Name:	Replacement of Existing Residential Center	**Report Page:**	**(Page 4 of 5)**
Project Address:	440 East Hill Road	**Date Prepared:**	10/20/2020

H. VOLTAGE DROP

MSA	☒	Voltage drop less than 5%	☐	Permitted by CA Elec Code (Exception to 130.5(c))*	Attached	E401	☐	☐

** NOTES: If "Permitted by CA Elec Code *" is selected under Compliance Method above, please indicate where the exception applies in the space provided below.*

[1] FOOTNOTES: Voltage drop calculations may be attached to the permit application outside the construction documents if allowed by the Authority Having Jurisdiction. Select "attached" if applicable. If calculations will be the responsibility of the installing contractor, select "Contractor Responsible".

I.CIRCUIT CONTROLS FOR 120-VOLT RECEPTACLES AND CONTROLLED RECEPTACLES

This section does not apply to this project.

J. DECLARATION OF REQUIRED CERTIFICATES OF INSTALLATION

Selections have been made based on information provided in this document. If any selection have been changed by permit applicant, an explanation should be included in Table E. Additional Remarks. These documents must be provided to the building inspector during construction and can be found online at https://www.energy.ca.gov/title24/2019standards/2019_compliance_documents/Nonresidential_Documents/NRCI/

Yes	No	Form/Title	Field Inspector	
			Pass	Fail
●	○	NRCI-ELC-01-E - Must be submitted for all buildings	☐	☐

K. DECLARATION OF REQUIRED CERTIFICATES OF ACCEPTANCE

There are no Certificates of Acceptance applicable to electrical power distribution requirements.

Registration Number: | Registration Date/Time: | Registration Provider: EnergySoft

CA Building Energy Efficiency Standards - 2019 Nonresidential Compliance | Report Version: 2019.0.001 Schema Version: rev 20190401 | Report Generated: 2020-10-20 08:49:31

STATE OF CALIFORNIA
Electrical Power Distribution
NRCC-ELC-E
CALIFORNIA ENERGY COMMISSION

CERTIFICATE OF COMPLIANCE			NRCC-ELC-E
Project Name:	Replacement of Existing Residential Center	**Report Page:**	**(Page 5 of 5)**
Project Address:	440 East Hill Road	**Date Prepared:**	10/20/2020

DOCUMENTATION AUTHOR'S DECLARATION STATEMENT

Documentation Author Name: Ray Swartz	Documentation Author Signature:
Company: tk1sc	Signature Date: 2020-10-20
Address: 11870 Pierce Street, Suite 160	CEA/ HERS Certification Identification (if applicable):
City/State/Zip: Riverside CA 92505	Phone: 951-299-4160

RESPONSIBLE PERSON'S DECLARATION STATEMENT

I certify the following under penalty of perjury, under the laws of the State of California:

1. The information provided on this Certificate of Compliance is true and correct.
2. I am eligible under Division 3 of the Business and Professions Code to accept responsibility for the building design or system design identified on this Certificate of Compliance (responsible designer)
3. The energy features and performance specifications, materials, components, and manufactured devices for the building design or system design identified on this Certificate of Compliance conform to the requirements of Title 24, Part 1 and Part 6 of the California Code of Regulations.
4. The building design features or system design features identified on this Certificate of Compliance are consistent with the information provided on other applicable compliance documents, worksheets, calculations, plans and specifications submitted to the enforcement agency for approval with this building permit application.
5. I will ensure that a completed signed copy of this Certificate of Compliance shall be made available with the building permit(s) issued for the building, and made available to the enforcement agency for all applicable inspections. I understand that a completed signed copy of this Certificate of Compliance is required to be included with the documentation the builder provides to the building owner at occupancy.

Responsible Designer Name: Ray Swartz	Responsible Designer Signature:
Company: tk1sc	Date Signed: 2020-10-20
Address: 11870 Pierce Street, Suite 160	License: E15610
City/State/Zip: Riverside CA 92505	Phone: 951-299-4160

Registration Number: | Registration Date/Time: | Registration Provider: EnergySoft

CA Building Energy Efficiency Standards - 2019 Nonresidential Compliance | Report Version: 2019.0.001 Schema Version: rev 20190401 | Report Generated: 2020-10-20 08:49:31

STATE OF CALIFORNIA
Electrical Power Distribution
NRCC-ELC-E
CALIFORNIA ENERGY COMMISSION

CERTIFICATE OF COMPLIANCE			NRCC-ELC-E
This document is used to demonstrate compliance with mandatory requirements in §130.5, for electrical systems in newly constructed nonresidential, high-rise residential and hotel/motel occupancies. Additions and alterations to electrical service systems in these occupancies will also use this document to demonstrate compliance per §141.0(a) or §141.0(b)2F for alterations..			
Project Name:	Replacement of Existing Residential Center	**Report Page:**	**(Page 1 of 5)**
Project Address:	440 East Hill Road	**Date Prepared:**	10/20/2020

A. GENERAL INFORMATION

01	Project Location (city)		Willits		02	Occupancy Types Within Project:			
☐	Office	☐	Retail	☐	Warehouse	☐	Hotel/Motel	☐	School	☐	Support Areas
☐	Parking Garage	☐	High-Rise Residential	☐	Relocatable	☐	Healthcare Facilities	☐	Other (write in)		See Table I

B. PROJECT SCOPE

This table includes electrical systems that are within the scope of the permit application.

01	02	03	04	05
Electrical Service Designation/Description	Scope of Work[1]	Rating (kVA)	Utility Provided Metering System Exception to §130.5(a) [2]	System subject to CA Elec Code Article 517 Exception to §130.5(a)and (b)
MSA	New electrical service equipment and meter	768	☐	☐
06 Demand Response Controls	Where required, demand response controls must be specified which are capable of receiving and automatically responding to at least one standards based messaging protocol which enables demand response after receiving a demand response signal. Sections §120.2, §130.1 and §130.3 and compliance documents NRCC-MCH, NRCC-LTI and NRCC-LTS will indicate when demand response controls are required.			

[1] FOOTNOTES: Adding only new feeders and branch circuits triggers Voltage Drop 130.5(c), no other requirements from 130.5 are required.
[2] Applicable if the utility company is providing a metering system that indicates instantaneous KW demand and KWh for a utility-defined period.

C. COMPLIANCE RESULTS

Results in this table are automatically calculated from data input and calculations in Tables F through I. Note: If any cell on this table says "COMPLIES with Exceptional Conditions" refer to Table D. Exceptional Conditions for guidance or see applicable Table referenced below.

01		02		03		04	05
Service Electrical Metering §130.5(a) (See Table F)	AND	Separation for Monitoring §130.5(b) (See Table G)	AND	Voltage Drop §130.5(c) (See Table H)	AND	Controlled Receptacles §130.5(d) (See Table I)	
Yes	AND	Yes	AND	Yes	AND	Yes	COMPLIES

Registration Number: | Registration Date/Time: | Registration Provider: EnergySoft

CA Building Energy Efficiency Standards - 2019 Nonresidential Compliance | Report Version: 2019.0.001 Schema Version: rev 20190401 | Report Generated: 2020-10-20 08:49:31

STATE OF CALIFORNIA
Electrical Power Distribution
NRCC-ELC-E
CALIFORNIA ENERGY COMMISSION

CERTIFICATE OF COMPLIANCE			NRCC-ELC-E
Project Name:	Replacement of Existing Residential Center	**Report Page:**	**(Page 2 of 5)**
Project Address:	440 East Hill Road	**Date Prepared:**	10/20/2020

D. EXCEPTIONAL CONDITIONS

This table is auto-filled with uneditable comments because of selections made or data entered in tables throughout the form.

E. ADDITIONAL REMARKS

This table is includes remarks made by the permit applicant to the Authority Having Jurisdiction.

F. SERVICE ELECTRICAL METERING

This table includes new or replacement electrical service systems OR equipment to demonstrate compliance with §130.5(a)

01	02	03				04	05	
Electrical Service Designation/Description	Rating (kVA)	Required Metering Capabilities per Table 130.5-A				Location of Requirements in Construction Documents	Field Inspector	
		Instantaneous Demand (kW)	Historical Peak Demand (kW)	Tracking kWh for user-defined period	kWh per rate period		Pass	Fail
MSA	768	☒	☒	☒	☐	E401	☐	☐

Registration Number: | Registration Date/Time: | Registration Provider: EnergySoft

CA Building Energy Efficiency Standards - 2019 Nonresidential Compliance | Report Version: 2019.0.001 Schema Version: rev 20190401 | Report Generated: 2020-10-20 08:49:31

TITLE 24 GENERAL NOTE

CONTRACTOR SHALL BE RESPONSIBLE FOR ALL WORK ASSOCIATED WITH FINAL INSPECTION AND APPLICABLE ACCEPTANCE REQUIREMENT PROCEDURES. INCLUDE ALL COSTS IN THE BASE BID. THIS SHALL INCLUDE, BUT NOT BE LIMITED TO, CONSTRUCTION INSPECTION, MEASUREMENTS, MONITORING, FUNCTIONAL TESTING, CALIBRATING, ETC. CONTRACTOR SHALL ASSUME THE ROLE OF "FIELD TECHNICIAN" AND "RESPONSIBLE PERSON" AS DEFINED IN STATE OF CALIFORNIA 2019 BUILDING ENERGY EFFICIENCY STANDARDS NONRESIDENTIAL COMPLIANCE MANUAL SECTION 13.2.2.

SEE STATE OF CALIFORNIA 2019 BUILDING ENERGY EFFICIENCY STANDARDS SECTIONS 10-103(a)3A AND 10-103(a)3B AND SECTION 130.4 FOR MORE INFORMATION.

SEE STATE OF CALIFORNIA 2019 BUILDING ENERGY EFFICIENCY STANDARDS NONRESIDENTIAL COMPLIANCE MANUAL CHAPTER 13 FOR MORE DETAILED REQUIREMENTS / INFORMATION.

SEE STATE OF CALIFORNIA 2019 BUILDING ENERGY EFFICIENCY STANDARDS RESIDENTIAL COMPLIANCE MANUAL CHAPTER 2 FOR MORE DETAILED REQUIREMENTS / INFORMATION.

PROVIDE COMPLETED INSTALLATION CERTIFICATE(S) AND CERTIFICATE(S) OF ACCEPTANCE AS REQUIRED TO THE SATISFACTION OF THE ENFORCEMENT AGENCY.

TITLE 24 PROCEDURES FOR TESTING AND ADJUSTING

CONTRACTOR SHALL BE RESPONSIBLE FOR ALL WORK ASSOCIATED WITH FINAL INSPECTION AND APPLICABLE ACCEPTANCE REQUIREMENT PROCEDURES. INCLUDE ALL COSTS IN THE BASE BID. THIS SHALL INCLUDE, BUT NOT BE LIMITED TO, CONSTRUCTION INSPECTION, MEASUREMENTS, MONITORING, FUNCTIONAL TESTING, CALIBRATING, ETC. CONTRACTOR SHALL ASSUME THE ROLE OF "FIELD TECHNICIAN" AND "RESPONSIBLE PERSON" AS DEFINED IN STATE OF CALIFORNIA 2019 BUILDING ENERGY EFFICIENCY STANDARDS NONRESIDENTIAL COMPLIANCE MANUAL SECTION 13.2.2.

LIGHTING CONTROL ACCEPTANCE TESTING AND ADJUSTING PROCEDURES – REFER TO NRCA-LTI-02-A DOCUMENTS.

AUTOMATIC DAYLIGHT CONTROL ACCEPTANCE TESTING AND ADJUSTING PROCEDURES – REFER TO NRCA-LTI-03-A DOCUMENTS.

DEMAND RESPONSE LIGHTING CONTROL ACCEPTANCE TESTING AND ADJUSTING PROCEDURES – REFER TO NRCA-LTI-04-A DOCUMENTS.

INSTITUTIONAL TUNING PAF ACCEPTANCE TESTING AND ADJUSTING PROCEDURES – REFER TO NRCA-LTI-05-A DOCUMENTS.

OUTDOOR LIGHTING CONTROL ACCEPTANCE TESTING AND ADJUSTING PROCEDURES – REFER TO NRCA-LTO-02-A DOCUMENTS.

ALL LIGHTING CONTROLS TESTING AND ADJUSTING DOCUMENTS NOTED ABOVE ARE AVAILABLE FROM THE CALIFORNIA ENERGY COMMISSION WEB SITE AT:

https://ww2.energy.ca.gov/title24/2019standards/2019_compliance_documents/Nonresidential_Documents/NRCA/

IDENTIFICATION STAMP
DIV. OF THE STATE ARCHITECT
APP: 02-118630 INC:
REVIEWED FOR
SS ☐ FLS ☐ ACS ☑
DATE: 04/13/2021

OFFICE OF THE STATE FIRE MARSHAL
APPROVED FIRE AND PANIC ONLY
Approval of this plan does not authorize or approve any omission or deviation from applicable regulations. Final approval is subject to field inspection. One set of approved plans shall be available on the project site at all times.
PERMIT NO.: 28-N-2532-CP
REVIEWED BY: LEO CATALYLO, OSFM
DATE: 4/1/2021

DGS GENERAL SERVICES
Department of General Services
State of California
Real Estate Services Division
Project Management & Development Branch
707 Third Street, Suite 4-105
West Sacramento, California 95605

NICHOLS MELBURG & ROSSETTO ARCHITECTS + ENGINEERS
300 Knollcrest Drive
Redding, CA. 96002
(530) 222-3300 (530) 222-3538 FAX
http://www.nmrdesign.com

Copyright © 2019
All ideas, designs, arrangements and plans indicated or represented by this drawing are owned by, and the property of, NICHOLS, MELBURG and ROSSETTO and were created, evolved and developed for use on, and in connection with, the specified project. None of such ideas, designs, arrangements or plans shall be used by, or disclosed to, any person, firm or corporation for any purpose whatsoever without the written permission of NICHOLS, MELBURG and ROSSETTO.

LICENSE STAMPS

REGISTERED PROFESSIONAL ENGINEER RAYMOND W. SWARTZ No. E15610 12/31/2021 ELECTRICAL STATE OF CALIFORNIA
Date Signed: 3/25/2021

CONSULTANT

tk1sc COLLABORATIVE
11870 Pierce Street, Suite 160
Riverside, California 92505
951.299.4160 www.tk1sc.com
Project Leader - Jerry Leonhardt
Electrical Lead - Reid Cordry
tk1sc Job #:2019-0228A

DRAWING STATUS
CONSTRUCTION DOCUMENTS

ISSUE

No.	Date	Description
1	10/20/2020	INITIAL PLAN REVIEW
2	01/22/2021	AGENCY RESUBMITTAL
3	03/22/2021	AGENCY RESUBMITTAL

If drawing is not 30" x 42" it is a reduced print

PROJECT
RESIDENTIAL CENTER, UKIAH: REPLACEMENT OF EXISTING RESIDENTIAL CENTER
440 EAST HILL ROAD
WILLITS, CALIFORNIA 95490
MENDOCINO COUNTY
CALIFORNIA CONSERVATION CORP

Supervisor	Designed	Drawn
		Author

DSA Application No.
02-118630

SHEET TITLE
TITLE 24 POWER DISTRIBUTION

DGS Project Number	NMR Project Number
000000000001826	18-6456

Reference North: NORTH | Sheet Scale

Sheet Number: E505

ISSUE DATE
July 9, 2021

Plot Date: 3/22/2021 9:00:02 AM
File Name: BIM 360://CCC Willits Residential Center/E_CCC Willits_COMMON_2019-0228A.rvt

STATE OF CALIFORNIA
Outdoor Lighting
NRCC-LTO-E
CALIFORNIA ENERGY COMMISSION

CERTIFICATE OF COMPLIANCE			NRCC-LTO-E
Project Name:	Replacement of Existing Residential Center	Report Page:	(Page 9 of 10)
Project Address:	440 East Hill Road	Date Prepared:	10/20/2020

O. DECLARATION OF REQUIRED CERTIFICATES OF INSTALLATION

Selections have been made based on information provided in this document. If any selection have been changed by permit applicant, an explanation should be included in Table E. Additional Remarks. These documents must be provided to the building inspector during construction and can be found online at https://www.energy.ca.gov/title24/2019standards/2019_compliance_documents/Nonresidential_Documents/NRCI/

Yes	No	Form/Title	Field Inspector Pass	Field Inspector Fail
●	○	NRCI-LTO-01-E - Must be submitted for all buildings	☐	☐
○	●	NRCI-LTO-02-E: Must be submitted for a lighting control system, or for an Energy Management Control System (EMCS), to be recognized for compliance.	☐	☐

P. DECLARATION OF REQUIRED CERTIFICATES OF ACCEPTANCE

Selections have been made based on information provided in this document. If any selection have been changed by permit applicant, an explanation should be included in Table E. Additional Remarks. These documents must be provided to the building inspector during construction and must be completed through an Acceptance Test Technician Certification Provider (ATTCP). For more information visit: http://www.energy.ca.gov/title24/attcp/providers.html

Yes	No	Form/Title	Field Inspector Pass	Field Inspector Fail
●	○	NRCA-LTO-02-A - Must be submitted for all outdoor lighting controls except for alterations where controls are added to <= 20 luminaires.	☐	☐

Registration Number: | Registration Date/Time: | Registration Provider: EnergySoft
CA Building Energy Efficiency Standards - 2019 Nonresidential Compliance | Report Version: 2019.0.001 Schema Version: rev 20190401 | Report Generated: 2020-10-20 08:49:31

STATE OF CALIFORNIA
Outdoor Lighting
NRCC-LTO-E
CALIFORNIA ENERGY COMMISSION

CERTIFICATE OF COMPLIANCE			NRCC-LTO-E
Project Name:	Replacement of Existing Residential Center	Report Page:	(Page 10 of 10)
Project Address:	440 East Hill Road	Date Prepared:	10/20/2020

DOCUMENTATION AUTHOR'S DECLARATION STATEMENT

Documentation Author Name: Ray Swartz	Documentation Author Signature:
Company: tk1sc	Signature Date: 2020-10-20
Address: 11870 Pierce Street, Suite 160	CEA/ HERS Certification Identification (if applicable):
City/State/Zip: Riverside CA 92505	Phone: 951-299-4160

RESPONSIBLE PERSON'S DECLARATION STATEMENT

I certify the following under penalty of perjury, under the laws of the State of California:
1. The information provided on this Certificate of Compliance is true and correct.
2. I am eligible under Division 3 of the Business and Professions Code to accept responsibility for the building design or system design identified on this Certificate of Compliance (responsible designer)
3. The energy features and performance specifications, materials, components, and manufactured devices for the building design or system design identified on this Certificate of Compliance conform to the requirements of Title 24, Part 1 and Part 6 of the California Code of Regulations.
4. The building design features or system design features identified on this Certificate of Compliance are consistent with the information provided on other applicable compliance documents, worksheets, calculations, plans and specifications submitted to the enforcement agency for approval with this building permit application.
5. I will ensure that a completed signed copy of this Certificate of Compliance shall be made available with the building permit(s) issued for the building, and made available to the enforcement agency for all applicable inspections. I understand that a completed signed copy of this Certificate of Compliance is required to be included with the documentation the builder provides to the building owner at occupancy.

Responsible Designer Name: Ray Swartz	Responsible Designer Signature:
Company: tk1sc	Date Signed: 2020-10-20
Address: 11870 Pierce Street, Suite 160	License: E15610
City/State/Zip: Riverside CA 92505	Phone: 951-299-4160

Registration Number: | Registration Date/Time: | Registration Provider: EnergySoft
CA Building Energy Efficiency Standards - 2019 Nonresidential Compliance | Report Version: 2019.0.001 Schema Version: rev 20190401 | Report Generated: 2020-10-20 08:49:31

STATE OF CALIFORNIA
Outdoor Lighting
NRCC-LTO-E
CALIFORNIA ENERGY COMMISSION

CERTIFICATE OF COMPLIANCE			NRCC-LTO-E
Project Name:	Replacement of Existing Residential Center	Report Page:	(Page 6 of 10)
Project Address:	440 East Hill Road	Date Prepared:	10/20/2020

I. LIGHTING POWER ALLOWANCE (per §140.7)

This table includes areas using allowance calculations per §140.7. General Hardscape Allowance is per Table 140.7-A while "Use it or lose it" Allowances are per Table 140.7-B . Indicate which allowances are being used to expand sections for user input. Luminaires that qualify for one of the "Use it or lose it" allowances shall not qualify for another "Use it or lose it" allowance.

	01				
	☒ General Hardscape Allowance Table I (below)	"Use it or lose it" Allowance (select all that apply) (select all that apply)			
		☐ Per Application Table J	☐ Sales Frontage Table K	☐ Ornamental Table L	☒ Per Specific Area Table M

Calculated General Hardscape Lighting Power Allowance per Table 140.7-A (LZ 0, 1 & 4)

This section does not apply to this project.

Registration Number: | Registration Date/Time: | Registration Provider: EnergySoft
CA Building Energy Efficiency Standards - 2019 Nonresidential Compliance | Report Version: 2019.0.001 Schema Version: rev 20190401 | Report Generated: 2020-10-20 08:49:31

STATE OF CALIFORNIA
Outdoor Lighting
NRCC-LTO-E
CALIFORNIA ENERGY COMMISSION

CERTIFICATE OF COMPLIANCE			NRCC-LTO-E
Project Name:	Replacement of Existing Residential Center	Report Page:	(Page 7 of 10)
Project Address:	440 East Hill Road	Date Prepared:	10/20/2020

I. LIGHTING POWER ALLOWANCE (per §140.7)

Calculated General Hardscape Lighting Power Allowance per Table 140.7-A (LZ 2 & 3)

02	03	04	05	06	07	08	09	10
Area Description	Surface Type	Area Wattage Allowance (AWA) Illuminated Area (ft²)	Area Wattage Allowance (AWA) Allowed Density (W/ft²)	Area Wattage Allowance (AWA) Area Allowance (Watts)	Area Wattage Allowance (AWA) Perimeter Length (lf)	Area Wattage Allowance (AWA) Allowed Density (W/lf)	Area Wattage Allowance (AWA) Linear Allowance (Watts)	Total General AWA + LWA (Watts)
Automotive Hardscape	Asphalt	214262	0.03	5356.55	4333	0.4	1083.25	6439.8
Walkway	Asphalt	11570	0.03	289.25	1584	0.4	396	685.25
Court	Asphalt	4638	0.03	115.95	286	0.4	71.5	187.45
Amphitheater	Asphalt	344	0.03	8.6	76	0.4	19	27.6
Bldg A Exterior	Asphalt	280	0.03	7	96	0.4	24	31
Bldg C Exterior	Asphalt	496	0.03	12.4	136	0.4	34	46.4
Bldg RA Exterior	Asphalt	417	0.03	10.425	148	0.4	37	47.425
Bldg RB Exterior	Asphalt	417	0.03	10.425	148	0.4	37	47.425
Bldg RC Exterior	Asphalt	417	0.03	10.425	148	0.4	37	47.425
Bldg RD Exterior	Asphalt	417	0.03	10.425	148	0.4	37	47.425
Bldg RE Exterior	Asphalt	417	0.03	10.425	148	0.4	37	47.425
Bldg RF Exterior	Asphalt	417	0.03	10.425	148	0.4	37	47.425
Bldg ED Exterior	Asphalt	470	0.03	11.75	156	0.4	39	50.75
Bldg MP Exterior	Asphalt	2055	0.03	51.375	600	0.4	150	201.375
Bldg RCC Exterior	Asphalt	869	0.03	21.725	287	0.4	71.75	93.475
Bldg WH Exterior	Asphalt	768	0.03	19.2	488	0.4	122	141.2
						Initial Wattage Allowance for Entire Site (Watts):		350
						Total General Hardscape Allowance (Watts):		8538.85

J. LIGHTING ALLOWANCE: PER APPLICATION

This section does not apply to this project.

Registration Number: | Registration Date/Time: | Registration Provider: EnergySoft
CA Building Energy Efficiency Standards - 2019 Nonresidential Compliance | Report Version: 2019.0.001 Schema Version: rev 20190401 | Report Generated: 2020-10-20 08:49:31

STATE OF CALIFORNIA
Outdoor Lighting
NRCC-LTO-E
CALIFORNIA ENERGY COMMISSION

CERTIFICATE OF COMPLIANCE			NRCC-LTO-E
Project Name:	Replacement of Existing Residential Center	Report Page:	(Page 8 of 10)
Project Address:	440 East Hill Road	Date Prepared:	10/20/2020

K. LIGHTING ALLOWANCE: SALES FRONTAGE

This section does not apply to this project.

L. LIGHTING ALLOWANCE: ORNAMENTAL

This section does not apply to this project.

M. LIGHTING ALLOWANCE: PER SPECIFIC AREA

This table includes areas using the wattage allowance per specific area from Table 140.7-B . More than one specific area allowance may be taken in a single project, if applicable. However, multiple specific area allowances may not be taken for the exact same area on the site.

01	02	03	04	05	06	07	08	09	10
		CALCULATED ALLOWANCE (Watts)			DESIGN WATTS				
Area Description	Specific Area Type per Table 140.7-B	Specific Area (ft²)[1]	Allowed Density (W/ft²)	Extra Allowance (Watts)	Luminaire Name or Item Tag	Watts per Luminaire	# of Luminaires	Design Watts	Additional Allowance (Watts)
Exterior Canopy	NonSalesCanopy	1917	0.27	517.59	57	18	6	108	108
							Total Design Watts for this Area:	108	
								Total Allowance (Watts) All Areas:	108

[1] *FOOTNOTES: See Table 140.7-B for rules for calculating the specific areas (ft²) for these additional lighting allowances.*
[2] *For luminaires indicated in Table E as linear, wattage in column 07 is W/lf instead of Watts/luminaire. Total linear feet should be indicated in column 08 instead of number of luminaires.*

N. EXISTING CONDITIONS POWER ALLOWANCE (alterations only)

This section does not apply to this project.

Registration Number: | Registration Date/Time: | Registration Provider: EnergySoft
CA Building Energy Efficiency Standards - 2019 Nonresidential Compliance | Report Version: 2019.0.001 Schema Version: rev 20190401 | Report Generated: 2020-10-20 08:49:31

STATE OF CALIFORNIA
Outdoor Lighting
NRCC-LTO-E
CALIFORNIA ENERGY COMMISSION

CERTIFICATE OF COMPLIANCE			NRCC-LTO-E
Project Name:	Replacement of Existing Residential Center	Report Page:	(Page 3 of 10)
Project Address:	440 East Hill Road	Date Prepared:	10/20/2020

F. OUTDOOR LIGHTING FIXTURE SCHEDULE

For new or altered lighting systems demonstrating compliance with §140.7 all new luminaires being installed and any existing luminaires remaining or being moved within the spaces covered by the permit application are included in the Table below. For altered lighting systems using the Existing Power method per §141.0(b)2I, only new luminaires being installed and replacement luminaires being installed as part of the project scope are included (ie, existing luminaires remaining or existing luminaires being moved are not included).

Designed Wattage:

01	02	03	04	05	06	07	08	09	10
Name or Item Tag	Complete Luminaire Description		Watts per luminaire[1, 2]	How is Wattage determined	Total number luminaires [2]	Luminaire Status[3]	Excluded per §140.7(a)	Design Watts	Cutoff Req. > 6,200 initial lumen output §130.2(b)[4]	Field Inspector Pass	Field Inspector Fail
16	16 - LED Downlight	☐ Linear	17	NAB Default	91	New	☐	1,547	NA; < 6200 lumens	☐	☐
21	21 - LED Sconce	☐ Linear	27	NAB Default	20	New	☐	540	NA; < 6200 lumens	☐	☐
9	9 - Recessed LED Downlight	☐ Linear	11	NAB Default	2	New	☐	22	NA; < 6200 lumens	☐	☐
S1	S1 - LED Pole Mounted Single Head	☐ Linear	105	NAB Default	27	New	☐	2,835	NA; < 6200 lumens	☐	☐
S1B	S1B - LED Pole Mounted Dual Head	☐ Linear	210	NAB Default	8	New	☐	1,680	NA; < 6200 lumens	☐	☐
S3	S3 - In-ground LED Spot Light	☐ Linear	30	NAB Default	3	New	☐	90	NA; < 6200 lumens	☐	☐
S4	S4 - LED Bollard	☐ Linear	18	NAB Default	11	New	☐	198	NA; < 6200 lumens	☐	☐
S5	S5 - LED Pole Mounted	☐ Linear	105	NAB Default	4	New	☐	420	NA; < 6200 lumens	☐	☐
S6	S6 - LED Linear	☐ Linear	24	NAB Default	4	New	☐	96	NA; < 6200 lumens	☐	☐
S7	S7 - LED Canopy Light	☐ Linear	18	NAB Default	6	New	☐	108	NA; < 6200 lumens	☐	☐
S8	S8 - In-ground LED Uplight	☐ Linear	21	NAB Default	2	New	☐	42	NA; < 6200 lumens	☐	☐

Registration Number: | Registration Date/Time: | Registration Provider: EnergySoft
CA Building Energy Efficiency Standards - 2019 Nonresidential Compliance | Report Version: 2019.0.001 Schema Version: rev 20190401 | Report Generated: 2020-10-20 08:49:31

STATE OF CALIFORNIA
Outdoor Lighting
NRCC-LTO-E
CALIFORNIA ENERGY COMMISSION

CERTIFICATE OF COMPLIANCE			NRCC-LTO-E
Project Name:	Replacement of Existing Residential Center	Report Page:	(Page 4 of 10)
Project Address:	440 East Hill Road	Date Prepared:	10/20/2020

F. OUTDOOR LIGHTING FIXTURE SCHEDULE

For new or altered lighting systems demonstrating compliance with §140.7 all new luminaires being installed and any existing luminaires remaining or being moved within the spaces covered by the permit application are included in the Table below. For altered lighting systems using the Existing Power method per §141.0(b)2I, only new luminaires being installed and replacement luminaires being installed as part of the project scope are included (ie, existing luminaires remaining or existing luminaires being moved are not included).

Designed Wattage:

01	02	03	04	05	06	07	08	09	10
						Total Design Watts:	7578		

[1] *NOTES: Selections with a * require a note in the space below explaining how compliance is achieved.*
EX: Luminaire is lighting a statue; EXCEPTION 2 to §130.2(b)

[2] *FOOTNOTES: Authority Having Jurisdiction may ask for Luminaire cut sheets to confirm wattage used for compliance per §130.0(c)*
[3] *For linear luminaires, wattage should be indicated as W/lf instead of Watts/luminaire. Total linear feet should be indicated in column 05 instead of number of luminaires.*
[4] *Select "New" for new luminaires in a new outdoor lighting project, or for added luminaires in an alteration. Select "Altered" for replacement luminaires in an alteration. Select "Existing to Remain" for existing luminaires within the project scope that are not being altered and are remaining. Select "Existing Reinstalled" for existing luminaires which are being removed and reinstalled as part of the project scope.*
[5] *Compliance with mandatory cutoff requirements is required for luminaires with initial lumen output >= 6,200 unless exempted by §130.2(b)*

G. CUTOFF REQUIREMENTS (BUG)

This section does not apply to this project.

Registration Number: | Registration Date/Time: | Registration Provider: EnergySoft
CA Building Energy Efficiency Standards - 2019 Nonresidential Compliance | Report Version: 2019.0.001 Schema Version: rev 20190401 | Report Generated: 2020-10-20 08:49:31

STATE OF CALIFORNIA
Outdoor Lighting
NRCC-LTO-E
CALIFORNIA ENERGY COMMISSION

CERTIFICATE OF COMPLIANCE			NRCC-LTO-E
Project Name:	Replacement of Existing Residential Center	Report Page:	(Page 5 of 10)
Project Address:	440 East Hill Road	Date Prepared:	10/20/2020

H. OUTDOOR LIGHTING CONTROLS

This table demonstrates compliance with controls requirements for all new or altered luminaires installed as part of the permit application. For alteration projects, luminaires which are existing to remain (ie untouched) and luminaires which are removed and reinstalled (wiring only) do not need to be included in this table even if they are within the spaces covered by the permit application.
*When an option having a * is selected, the notes section of this table must be completed. The lighting controls section of the Compliance Summary Table on the first page will show "DOES NOT COMPLY" if the notes are left blank.*

Mandatory Controls

01	02	03	04	05	
Area Description	Shut-Off §130.2(c)1	Auto-Schedule §130.2(c)2	Motion Sensor §130.2(c)3	Field Inspector Pass	Field Inspector Fail
Exterior	Photocontrol	Yes	Yes	☐	☐
Exterior	Astronomical Timer	Yes	Yes	☐	☐

[1] *NOTES: Controls with a * require a note in the space below explaining how compliance is achieved.*
EX: Not permitted by health & safety to be turned off; EXCEPTION 1 to §130.2(c)

Registration Number: | Registration Date/Time: | Registration Provider: EnergySoft
CA Building Energy Efficiency Standards - 2019 Nonresidential Compliance | Report Version: 2019.0.001 Schema Version: rev 20190401 | Report Generated: 2020-10-20 08:49:31

STATE OF CALIFORNIA
Outdoor Lighting
NRCC-LTO-E
CALIFORNIA ENERGY COMMISSION

CERTIFICATE OF COMPLIANCE			NRCC-LTO-E
Project Name:	Replacement of Existing Residential Center	Report Page:	(Page 1 of 10)
Project Address:	440 East Hill Road	Date Prepared:	10/20/2020

A. GENERAL INFORMATION

01	Project Location (city)	Willits	04	Total Illuminated Hardscape Area (ft²)	238254
02	Climate Zone	2			
03	Outdoor Lighting Zone per Title 24 Part 1 §10.114 or as designated by Authority Having Jurisdiction (AHJ):				
☐	LZ-0: Very Low - Undeveloped Parkland	☐	LZ-2: Moderate - Rural Areas	☐	LZ-4: High - Must be reviewed by CA Energy Commission for Approval
☐	LZ-1: Low - Developed Parkland	☒	LZ-3: Moderately High - Urban Areas		

B. PROJECT SCOPE

This table includes outdoor lighting systems that are within the scope of the permit application and are demonstrating compliance using the prescriptive path outlined in §140.7 or §141.0(b)2I. for alterations.

My Project Consists of:

01	02	
☒ New Lighting System	Must Comply with Allowances from §140.7	
☐ Altered Lighting System	Is your alteration increasing the connected lighting load (Watts)?	○ Yes ○ No

03	04	05
% of Existing Luminaires Being Altered[1]	Sum Total of Luminaires Being Added or Altered	Calculation Method
☐ <10% ☐ >= 10% and < 50% ☐ >= 50%		

Please proceed to Table F. Outdoor Lighting Fixture Schedule to define the project's luminaires.

[1] *FOOTNOTES: % of Existing Luminaires Being Altered = (Sum Total of Luminaires Being Added or Altered / Existing Luminaires within the Scope of the Permit Application) x 100.*

Registration Number: | Registration Date/Time: | Registration Provider: EnergySoft
CA Building Energy Efficiency Standards - 2019 Nonresidential Compliance | Report Version: 2019.0.001 Schema Version: rev 20190401 | Report Generated: 2020-10-20 08:49:31

STATE OF CALIFORNIA
Outdoor Lighting
NRCC-LTO-E
CALIFORNIA ENERGY COMMISSION

CERTIFICATE OF COMPLIANCE			NRCC-LTO-E
Project Name:	Replacement of Existing Residential Center	Report Page:	(Page 2 of 10)
Project Address:	440 East Hill Road	Date Prepared:	10/20/2020

C. COMPLIANCE RESULTS

Results in this table are automatically calculated from data input and calculations in Tables F through I. Note: If any cell on this table says "COMPLIES with Exceptional Conditions" refer to Table D. Exceptional Conditions for guidance or see applicable Table referenced below.

Calculations of Total Allowed Lighting Power (Watts) §140.7 or §141.0(b)2I.									Compliance Results		
01		02		03		04		05		06		07		08		09
General Hardscape Allowance §140.7(d)1 (See Table I)	+	Per Application §140.7(d)2 (See Table J)	+	Sales Frontage §140.7(d)2 (See Table K)	+	Ornamental §140.7(d)2 (See Table L)	+	Per Specific Area §140.7(d)2 (See Table M)	OR	Existing Power Allowance §141.0(b)2L (See Table N)	=	Total Allowed (Watts)	≥	Total Actual (Watts)		07 must be >= 08
8,538.85	+		+		+		+	108	OR		=	8,646.85	≥	7,578		COMPLIES
												Cutoff Compliance (See Table G for Details):				Not Applicable
												Controls Compliance (See Table H for Details):				COMPLIES

D. EXCEPTIONAL CONDITIONS

This table is auto filled with unedittable comments because of selections made or data entered in tables throughout the form.

E. ADDITIONAL REMARKS

This table includes remarks made by the permit applicant to the Authority Having Jurisdiction.

TITLE 24 GENERAL NOTE

CONTRACTOR SHALL BE RESPONSIBLE FOR ALL WORK ASSOCIATED WITH FINAL INSPECTION AND APPLICABLE ACCEPTANCE REQUIREMENT PROCEDURES. INCLUDE ALL COSTS IN THE BASE BID. THIS SHALL INCLUDE, BUT NOT BE LIMITED TO, CONSTRUCTION INSPECTION, MEASUREMENTS, MONITORING, FUNCTIONAL TESTING, CALIBRATING, ETC. CONTRACTOR SHALL ASSUME THE ROLE OF "FIELD TECHNICIAN" AND "RESPONSIBLE PERSON" AS DEFINED IN STATE OF CALIFORNIA 2019 BUILDING ENERGY EFFICIENCY STANDARDS NONRESIDENTIAL COMPLIANCE MANUAL SECTION 13.2.2.

SEE STATE OF CALIFORNIA 2019 BUILDING ENERGY EFFICIENCY STANDARDS SECTIONS 10-103(a)3A AND 10-103(a)3B AND SECTION 130.4 FOR MORE INFORMATION.

SEE STATE OF CALIFORNIA 2019 BUILDING ENERGY EFFICIENCY STANDARDS NONRESIDENTIAL COMPLIANCE MANUAL CHAPTER 13 FOR MORE DETAILED REQUIREMENTS / INFORMATION.

SEE STATE OF CALIFORNIA 2019 BUILDING ENERGY EFFICIENCY STANDARDS RESIDENTIAL COMPLIANCE MANUAL CHAPTER 2 FOR MORE DETAILED REQUIREMENTS / INFORMATION.

PROVIDE COMPLETED INSTALLATION CERTIFICATE(S) AND CERTIFICATE(S) OF ACCEPTANCE AS REQUIRED TO THE SATISFACTION OF THE ENFORCEMENT AGENCY.

TITLE 24 PROCEDURES FOR TESTING AND ADJUSTING

CONTRACTOR SHALL BE RESPONSIBLE FOR ALL WORK ASSOCIATED WITH FINAL INSPECTION AND APPLICABLE ACCEPTANCE REQUIREMENT PROCEDURES. INCLUDE ALL COSTS IN THE BASE BID. THIS SHALL INCLUDE, BUT NOT BE LIMITED TO, CONSTRUCTION INSPECTION, MEASUREMENTS, MONITORING, FUNCTIONAL TESTING, CALIBRATING, ETC. CONTRACTOR SHALL ASSUME THE ROLE OF "FIELD TECHNICIAN" AND "RESPONSIBLE PERSON" AS DEFINED IN STATE OF CALIFORNIA 2019 BUILDING ENERGY EFFICIENCY STANDARDS NONRESIDENTIAL COMPLIANCE MANUAL SECTION 13.2.2.

LIGHTING CONTROL ACCEPTANCE TESTING AND ADJUSTING PROCEDURES – REFER TO NRCA-LTI-02-A DOCUMENTS.

AUTOMATIC DAYLIGHT CONTROL ACCEPTANCE TESTING AND ADJUSTING PROCEDURES – REFER TO NRCA-LTI-03-A DOCUMENTS.

DEMAND RESPONSE LIGHTING CONTROL ACCEPTANCE TESTING AND ADJUSTING PROCEDURES – REFER TO NRCA-LTI-04-A DOCUMENTS.

INSTITUTIONAL TUNING PAF ACCEPTANCE TESTING AND ADJUSTING PROCEDURES – REFER TO NRCA-LTI-05-A DOCUMENTS.

OUTDOOR LIGHTING CONTROL ACCEPTANCE TESTING AND ADJUSTING PROCEDURES – REFER TO NRCA-LTO-02-A DOCUMENTS.

ALL LIGHTING CONTROLS TESTING AND ADJUSTING DOCUMENTS NOTED ABOVE ARE AVAILABLE FROM THE CALIFORNIA ENERGY COMMISSION WEB SITE AT:

https://ww2.energy.ca.gov/title24/2019standards/2019_compliance_documents/Nonresidential_Documents/NRCA/

IDENTIFICATION STAMP
DIV. OF THE STATE ARCHITECT
APP: 02-118630 INC:
REVIEWED FOR
SS ☐ FLS ☐ ACS ☑
DATE: 04/13/2021

OFFICE OF THE STATE FIRE MARSHAL
APPROVED FIRE AND PANIC ONLY
Approval of this plan does not authorize or approve any omission or deviation from applicable regulations. Final approval is subject to field inspection. One set of approved plans shall be available on the project site at all times.
PERMIT NO.: 28-N 2532-CP
REVIEWED BY: LEO CATALYLO, OSFM
DATE: 4/ /2021

DGS
GENERAL SERVICES
Department of General Services
State of California
Real Estate Services Division
Project Management & Development Branch
707 Third Street, Suite 4-105
West Sacramento, California 95605

NICHOLS MELBURG & ROSSETTO ARCHITECTS + ENGINEERS
300 Knolcrest Drive
Redding, CA. 96002
(530) 222-3300 (530) 222-3538 FAX
http://www.nmrdesign.com

Copyright © 2019
All ideas, designs, arrangements and plans indicated or represented by this drawing are owned by, and the property of, NICHOLS, MELBURG and ROSSETTO and were created, evolved and developed for use on, and in connection with, the specified project. None of such ideas, designs, arrangements or plans shall be used by, or disclosed to any person, firm or corporation for any purpose whatsoever without the written permission of NICHOLS, MELBURG and ROSSETTO.

LICENSE STAMPS

REGISTERED PROFESSIONAL ENGINEER RAYMOND W. SWARTZ No. E15610 12/31/2021 MECHANICAL ENGINEER STATE OF CALIFORNIA
Date Signed: 3/25/2021

CONSULTANT
tk1sc COLLABORATIVE
11870 Pierce Street, Suite 160
Riverside, California 92505
951.299.4160 www.tk1sc.com
Project Leader - Jerry Leonhardt
Electrical Lead - Reid Cordry
tk1sc Job #:2019-0228A

DRAWING STATUS
CONSTRUCTION DOCUMENTS

ISSUE

No.	Date	Description
1	10/20/2020	INITIAL PLAN REVIEW
2	01/22/2021	AGENCY RESUBMITTAL
3	03/22/2021	AGENCY RESUBMITTAL

If drawing is not 30" x 42" it is a reduced print

PROJECT
RESIDENTIAL CENTER, UKIAH: REPLACEMENT OF EXISTING RESIDENTIAL CENTER
440 EAST HILL ROAD
WILLITS, CALIFORNIA 95490
MENDOCINO COUNTY
CALIFORNIA CONSERVATION CORP

Supervisor	Designed	Drawn
		Author

DSA Application No.
02-118630

SHEET TITLE
TITLE 24 EXTERIOR LIGHTING

DGS Project Number	NMR Project Number
000000000001826	18-6456

Reference North | Sheet Scale

Sheet Number
E506

ISSUE DATE
July 9, 2021

Plot Date: 3/22/2021 9:00:11 AM
File Name: BIM 360://CCC Willits Residential Center/E_CCC Willits_COMMON_2019-0228A.rvt

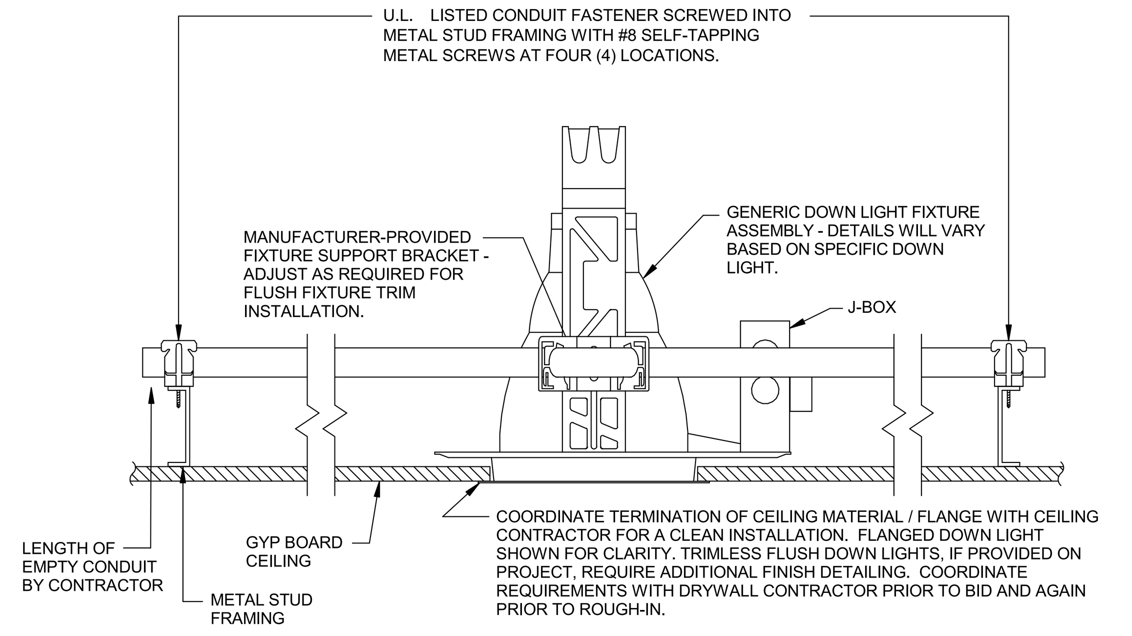

DOWN LIGHT FIXTURE SUPPORT DETAIL (HARD LID) (3)

SCALE: NTS

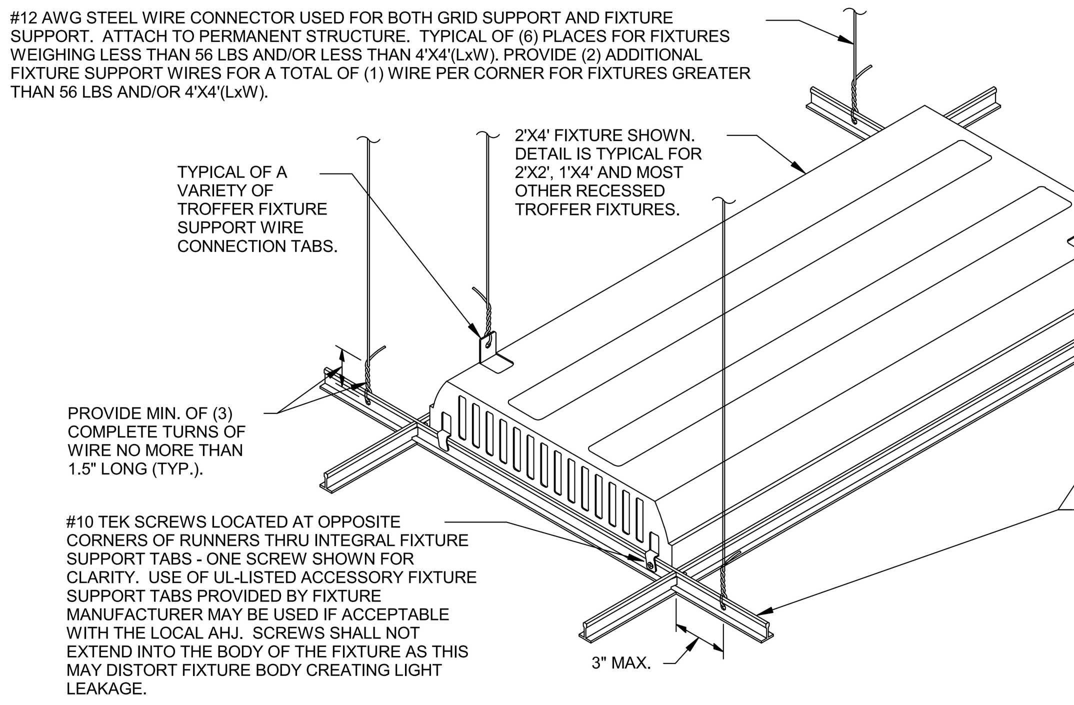

FIXTURE SUPPORT DETAIL (2)

SCALE: NTS

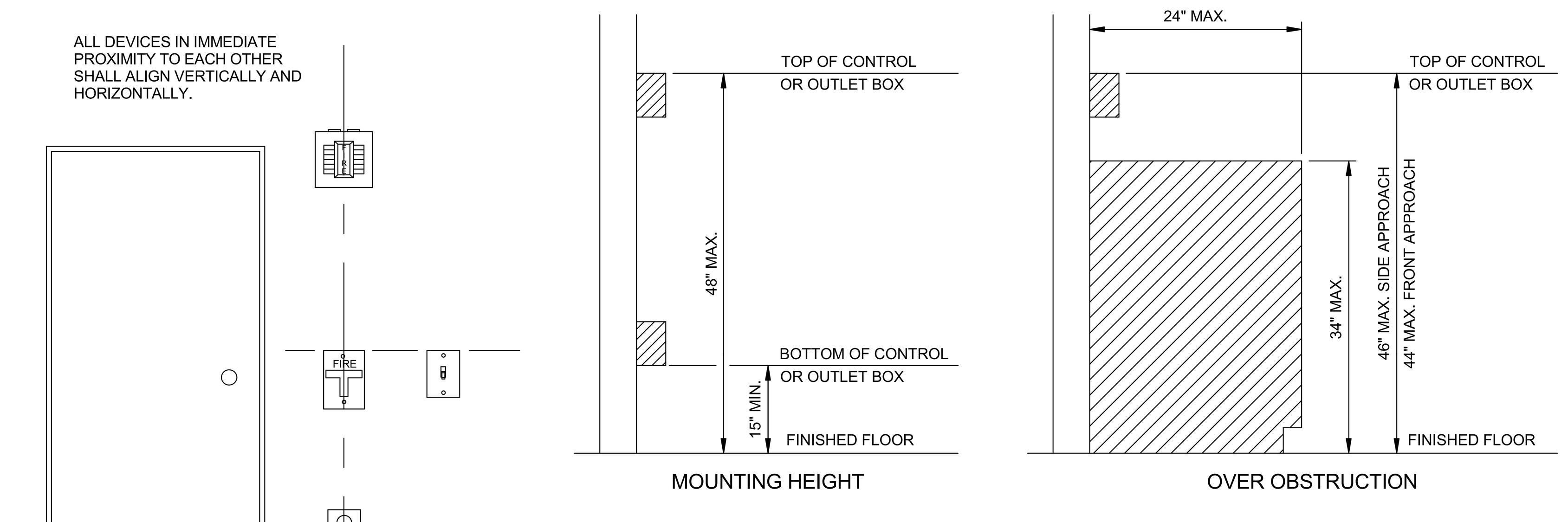

ALL DEVICE HEIGHTS DEPICTED SHALL BE MODIFIED AS REQUIRED BY GOVERNING BUILDING CODES. CONTRACTOR TO VERIFY/RECONCILE APPLICABLE CODE REQUIREMENTS AND ANY DEVICE HEIGHT REQUIREMENTS DEPICTED ON ARCHITECTURAL OR INTERIOR DESIGN PLANS AND SPECIFICATIONS PRIOR TO DEVICE ROUGH-IN. CONFLICTS OR LACK OF MOUNTING HEIGHT SPECIFICITY ON THE ARCHITECTURAL OR INTERIOR DESIGN PLANS AND SPECIFICATIONS SHALL BE CAUSE FOR THE CONTRACTOR TO ISSUE A FORMAL WRITTEN REQUEST FOR INFORMATION (RFI) FOR RESOLUTION. DEVICE MOUNTING HEIGHT CLARIFICATIONS/SPECIFICATIONS SHALL NOT RESULT IN AN ADDITIONAL COST TO THE OWNER - CONTRACTOR SHALL INCLUDE ALL COSTS IN BASE BID.

DEVICE ALIGNMENT & MOUNTING HEIGHT DETAILS (1)

SCALE: NTS

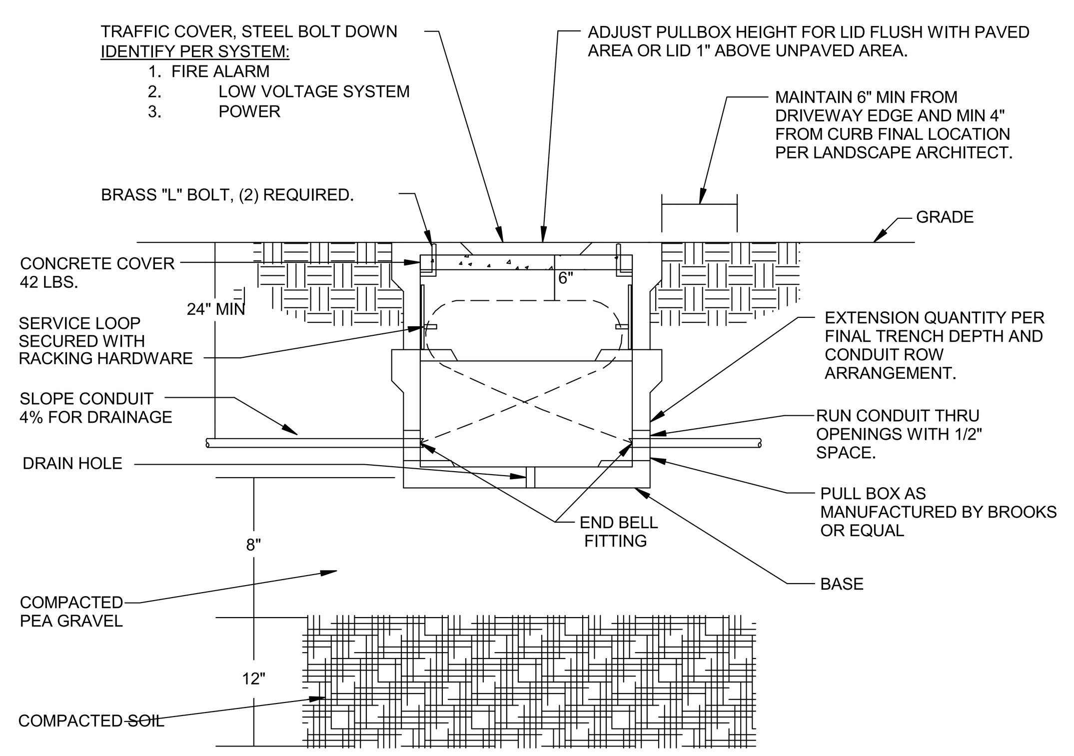

PULL BOX NOTES

1. ALL BOXES SHALL BE SET ON A MINIMUM 8" GRAVEL BASE WITH 1/2" DIAMETER GRAVEL.
2. ALL INCIDENTAL CONCRETE SHALL BE REMOVED FROM BOXES.
3. PROVIDE WATERTIGHT SPLICES AND CAPS FOR POWER CONDUCTORS.
4. PROVIDE SEALING GEL IN ALL CONDUITS (BOTH W/ CONDUCTORS AND IN EMPTY SPARE CONDUITS.) THE GEL SHALL BE INSERTED IN THE CONDUIT TO A DEPTH OF 6" AND FLUSH W/ THE END OF THE CONDUIT. THE GEL SHALL BE MANUFACTURED BY 3M #4442 RE-ENTERABLE ENCAPSULANT.
5. PROVIDE IDENTIFYING TAGS ON ALL POWER AND COMMUNICATION CONDUCTORS IN PULLBOXES.
6. PULLBOX SHALL BE SIZED PER C.E.C. REQUIREMENTS.

PULL BOX DETAIL (6)

SCALE: N.T.S.

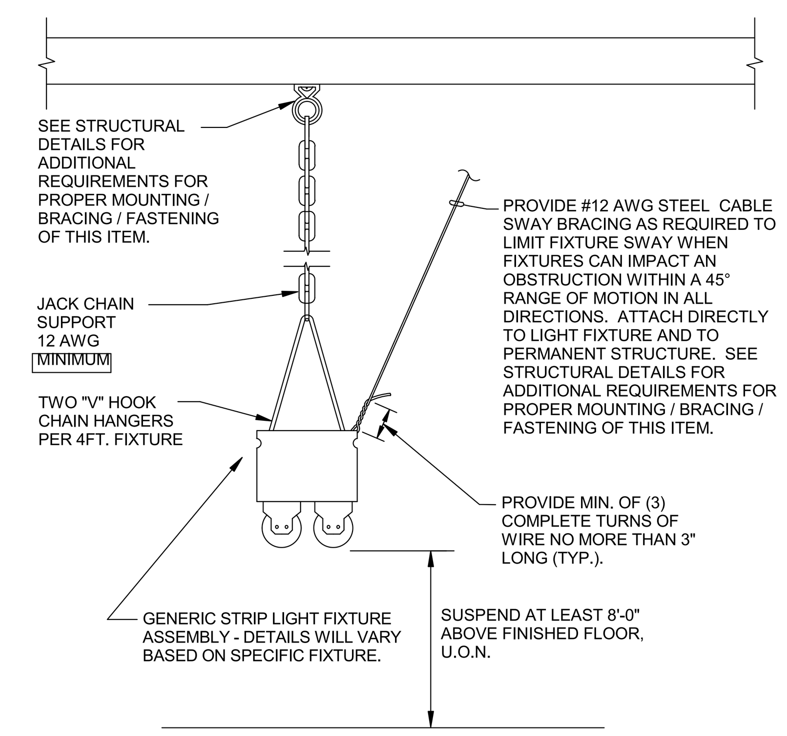

FIXTURE SUPPORT DETAIL (5)

SCALE: NTS

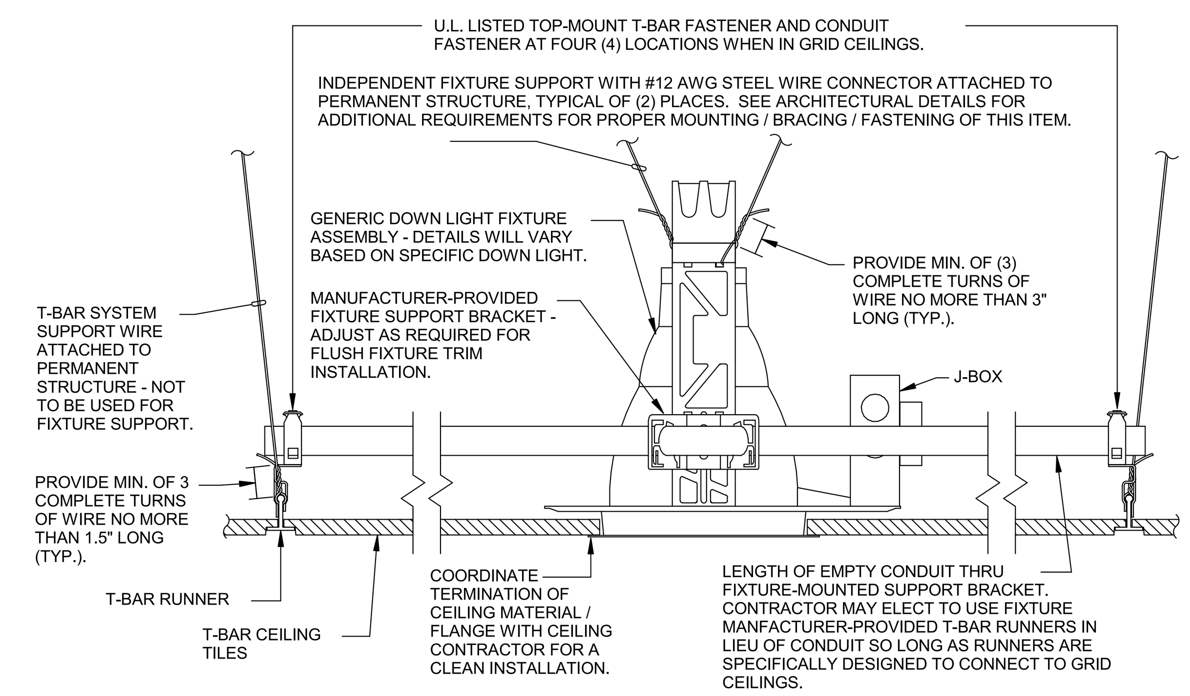

DOWN LIGHT FIXTURE SUPPORT DETAIL (T-BAR) (4)

SCALE: NTS

USE THIS HALF OF DETAIL WHEN USE THIS HALF OF DETAIL WHEN

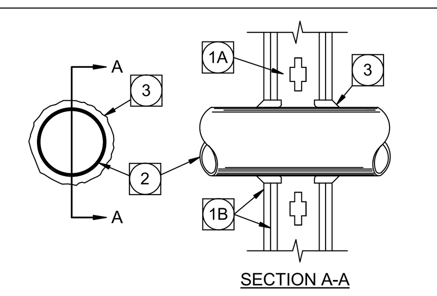

PENETRATION THRU GYPSUM BOARD WALL

NO SCALE

System No.W-L-1001
June 15, 2005
F Ratings - 1, 2, 3 and 4 Hr (See Items 2 and 3)
T Ratings - 0, 1, 2, 3, and 4 Hr (See Item 3)
L Rating At Ambient - less than 1 CFM/sq ft
L Rating At 400 F - less than 1 CFM/sq ft

1. Wall Assembly - The 1, 2, 3 or 4 hr fire-rated gypsum wallboard/stud wall assembly shall be constructed of the materials and in the manner described in the individual U300 or U400 Series Wall or Partition Designs in the UL Fire Resistance Directory and shall include the following construction features:
   A. Studs - Wall framing may consist of either wood studs (max 2 hr fire rated assemblies) or steel channel studs. Wood studs to consist of nom 2 by 4 in. (51 by 102 mm) lumber spaced 16 in. (406 mm) OC with nom 2 by 4 in. (51 by 102 mm) lumber end plates and cross braces. Steel studs to be min 3-5/8 in. (92 mm) wide by 1-3/8 in. (35 mm) deep channels spaced max 24 in. (610 mm) OC.
   B. Gypsum Board* - Nom 1/2 or 5/8 in. (13 or 16 mm) thick, 4 ft. (122 cm) wide with square or tapered edges. The gypsum wallboard type, thickness, number of layers, fastener type and sheet orientation shall be as specified in the individual U300 or U400 Series Design in the UL Fire Resistance Directory. Max diam of opening is 26 in. (660 mm).
2. Through Penetrant - One metallic pipe, conduit or tubing installed either concentrically or eccentrically within the firestop system. The annular space between pipe, conduit or tubing and periphery of opening shall be min of 0 in. (0 mm) (point contact) to max 2 in. (51 mm). Pipe, conduit or tubing to be rigidly supported on both sides of wall assembly. The following types and sizes of metallic pipes, conduits or tubing may be used:
   A. Steel Pipe - Nom 24 in. (610 mm) diam (or smaller) Schedule 10 (or heavier) steel pipe.
   B. Iron Pipe - Nom 24 in. (610 mm) diam (or smaller) service weight (or heavier) cast iron soil pipe, nom 12 in. (305 mm) diam (or smaller) or Class 50 (or heavier) ductile iron pressure pipe.
   C. Conduit - Nom 6 in. (152 mm) diam (or smaller) steel conduit or nom 4 in. (102 mm) diam (or smaller) steel electrical metallic tubing
   D. Copper Tubing - Nom 6 in. (152 mm) diam (or smaller) Type L (or heavier) copper tubing
   E. Copper Pipe - Nom 6 in. (152 mm) diam (or smaller) Regular (or heavier) copper pipe.
   F. Through Penetrating Product* - Flexible Metal Piping - The following types of steel flexible metal gas piping may be used:

1. Nom 2 in. (51 mm) diam (or smaller) steel flexible metal gas piping. Plastic covering on piping may or may not be removed on both sides of floor or wall assembly.

OMEGA FLEX INC

2. Nom 1 in. (25 mm) diam (or smaller) steel flexible metal gas piping. Plastic covering on piping may or may not be removed on both sides of floor or wall assembly.

GASTITE, DIV OF TITEFLEX

3. Nom 1 in. (25 mm) diam (or smaller) steel flexible metal gas piping. Plastic covering on piping may or may not be

WARD MFG LLC

3. Fill, Void or Cavity Material* - Caulk or Sealant - Min 5/8, 1-1/4,1-7/8 and 2-1/2 in. (16, 32, 48 and 64 mm) thickness of caulk for 1, 2, 3 and 4 hr rated assemblies, respectively, applied within annulus, flush with both surfaces of wall. Min 1/4 in. (6 mm) diam bead of caulk applied to gypsum board/penetrant interface at point contact location on both sides of wall.
The hourly F Rating of the firestop system is dependent upon the hourly fire rating of the wall assembly in which it is installed, as shown in the following table.
The hourly T Rating of the firestop system is dependent upon the type or size of the pipe or conduit and the hourly fire rating of the wall assembly in which it is installed, as tabulated below.

+When copper pipe is used, T Rating is 0 hr.

3M COMPANY - CP 25WB+ or FB-3000 WT

*Bearing the UL Classification Marking

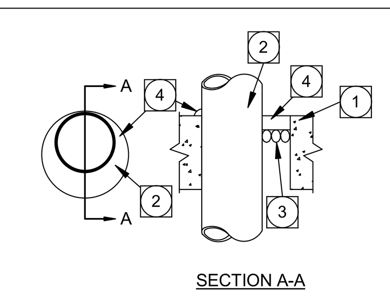

PENETRATION THRU CONCRETE WALL OR FLOOR

NO SCALE

System No. C-AJ-1044
March 15, 2007
F Ratings - 2, 3, and 4 Hr (See Items 2A and 4)
T Rating - 0 Hr
L Rating At Ambient - 2 CFM/sq ft
L Rating At 400 F - less than 1 CFM/sq ft
W Rating - Class I (See Item 4)

1. Floor or Wall Assembly - Lightweight or normal weight (100-150 pcf or 1600-2400 kg/m3) concrete. Except as noted in table under Item 4, min thickness of solid concrete floor or wall assembly is 4-1/2 in. (114 mm). Floor may also be constructed of any min 6 in. (152 mm) thick UL Classified hollow core Precast Concrete Units*. When floor is constructed of hollow core precast concrete units, packing material (Item 3) and caulk fill material (Item 4) to be installed symmetrically on both sides of floor, flush with floor surface. Wall assembly may also be constructed of any UL Classified Concrete Blocks*. Max diam of opening is in solid lightweight or normal weight concrete. Floor is 32 in. (813 mm). Max diam of opening in floor constructed of hollow-core precast concrete units is 7 in. (178 mm).

See Concrete Blocks (CAZT) and Precast Concrete Units (CFTV) categories in the Fire Resistance Directory for names of manufacturers.

1A. Steel Sleeve (Optional, not shown) - Max 15 in. (381 mm) ID (or smaller) Schedule 10 (or heavier) steel sleeve cast or grouted into floor or wall assembly. Sleeve may extend a max of 2 in. (51 mm) above top of floor or beyond either surface of wall. Max 16 in. (406 mm) ID (or smaller) min 0.028 (0.71 mm) wall thickness (or heavier) galvanized steel sleeve cast or grouted into floor or wall assembly. Sleeve may extend a max of 1/2 in. (13 mm) beyond either surface of floor or wall.

2. Through Penetrants - One metallic pipe, conduit or tubing to be installed either concentrically or eccentrically within the firestop system. Max annular space between pipe, conduit or tubing and edge of through opening or sleeve is dependent on the parameters shown in Item 4. Min annular space between pipe or conduit and edge of through opening is 0 in. (0 mm) (point contact). Pipe conduit or tubing to be rigidly supported on both sides of floor or wall assembly. The following types and sizes of metallic pipes, conduits or tubing may be used:
   A. Steel Pipe - Nom 30 in. (762 mm) diam (or smaller) Schedule 10 (or heavier) steel pipe.
   B. Iron Pipe - Nom 30 in. (762 mm) diam (or smaller) cast or ductile iron pipe.
   C. Conduit - Nom 6 in. (152 mm) diam (or smaller) rigid steel conduit.
   D. Conduit - Nom 4 in. (102 mm) diam (or smaller) steel electrical metallic tubing.
   E. Copper - Tubing Nom 6 in. (152 mm) diam (or smaller) Type L (or heavier) copper tube.
   F. Copper Pipe - Nom 6 in. (152 mm) diam (or smaller) Regular (or heavier) copper pipe.
3. Packing Material - Polyethylene backer rod or nom 1 in. (25 mm) thickness of tightly-packed mineral wool batt or glass fiber insulation firmly packed into opening as a permanent form. Packing material to be recessed from top surface of floor or from both surfaces of wall as required to accommodate the required thickness of caulk fill material (Item 4).

3A. Forming Material* - As an alternate to the packing material in Item 3, nom 4in. (102mm) wide strips of min 1/2 in (13mm) thick compressible mat to be stacked to a thickness greater than the width of the annular space and compression-fitted, edge-first, to fill the annular space to a min 2 in. (51mm) depth. As an option, the strips of a min 1/2 in (13mm) thick compressible mat may be folded in half, lengthwise, and stacked to a thickness greater than the width of the annular space and compression fitted, edge-first, to fill the annular space to a min 2 in. (51mm) depth. Top of forming material to be recessed from top surface of floor or from both surfaces of wall as necessary to accommodate the required thickness of caulk fill material.

3M COMPANY - Fire Barrier Packing Material

4. Fill,Void or Cavity Material* - Caulk or Sealant - Applied to fill the annular space flush with top surface of floor. In wall assemblies, required caulk thickness to be installed symmetrically on both sides of wall, flush with wall surface. At point contact location between penetrant and sleeve or between penetrant and concrete, a min 1/4 in. (6 mm) diam bead of caulk shall be applied at top surface of floor and at both surfaces of wall. The hourly F Ratings and the min required caulk thicknesses are dependent upon a number of parameters, as shown in the following table:

2-1/2(64)	1/2-12(13-305)	1-3/8(35)	1/2(13)	2
4-1/2(114)	1/2-12(13-305)	3-1/4(83)	1(25)	3
4-1/2(114)	22-30(558-762)	2(51)	1(25)	3
5-1/2(140)	1/2-6(13-152)	1-3/8(35)	1(25)(b)	4

(a) Min 2 in. (51 mm) thickness of mineral wool batt insulation required in annular space.
(b) Min 1 in. (25 mm) thickness of mineral wool batt insulation required in annular space on both sides of floor or wall assembly. Min 1 in. (25 mm) thickness of caulk to be installed flush with each surface of floor or wall assembly.

3M COMPANY - CP 25WB+ caulk or FB-3000 WT sealant.
(Note: W Rating applies only when FB-3000 WT sealant is used.)

*Bearing the UL Classification Marking

TYPICAL THROUGH RATED WALL OR FLOOR PENETRATIONS (U.L. LISTINGS) (10)

SCALE: N.T.S.

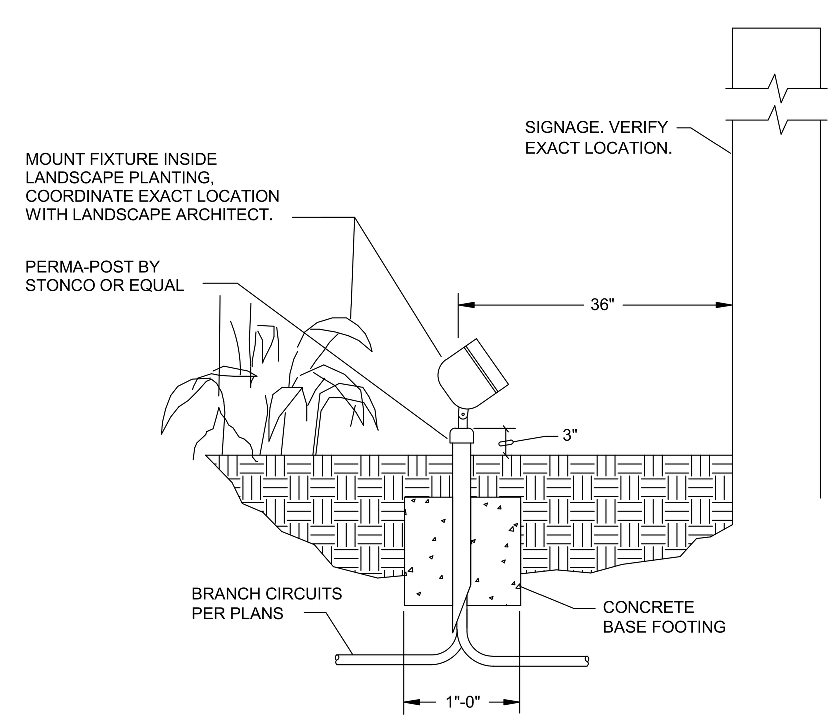

SIGN LIGHT MOUNTING DETAIL (8)

SCALE: NTS

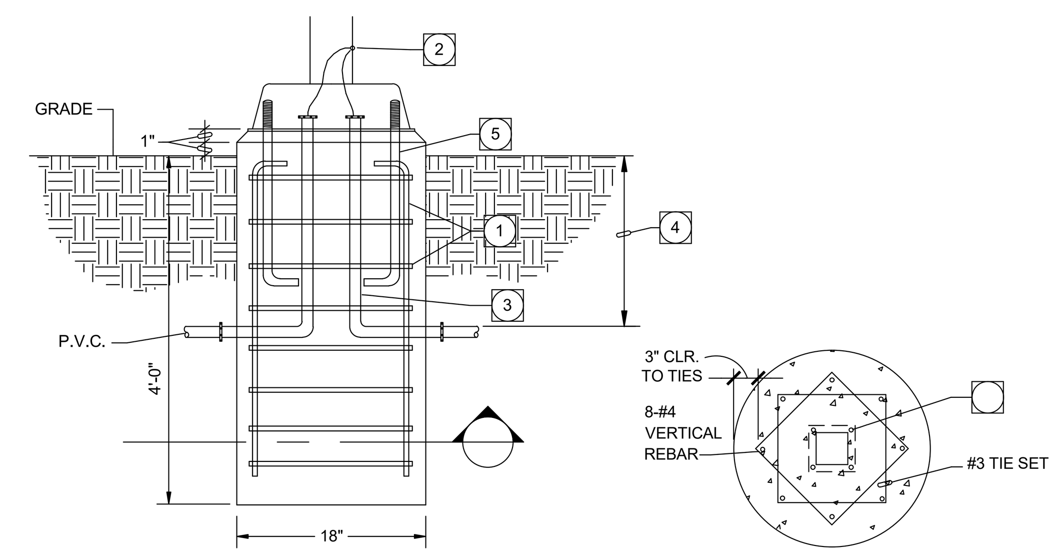

1. 8-#4 VERTS WITH #3 TIES AT 6"O.C.
2. BOND EQUIPMENT GROUND TO POLE.
3. BRANCH CIRCUIT CONDUIT PER SITE PLAN.
4. PROVIDE MINIMUM COVER OF 24" FROM FINISH GRADE.
5. 3/4" x 25" POLE ANCHOR BOLTS, SPACING TO MATCH MANUFACTURER'S BASE PLATE.

NOTE:
WHERE THE POLE IS MOUNTED IN SOFTSCAPE PROVIDE 12" CLEAR BETWEEN THE EDGE OF THE CONCRETE FOOTING AND THE EDGE OF THE ADJACENT HARDSCAPE.

FLUSH POLE BASE DETAIL (9B)

SCALE: N.T.S.

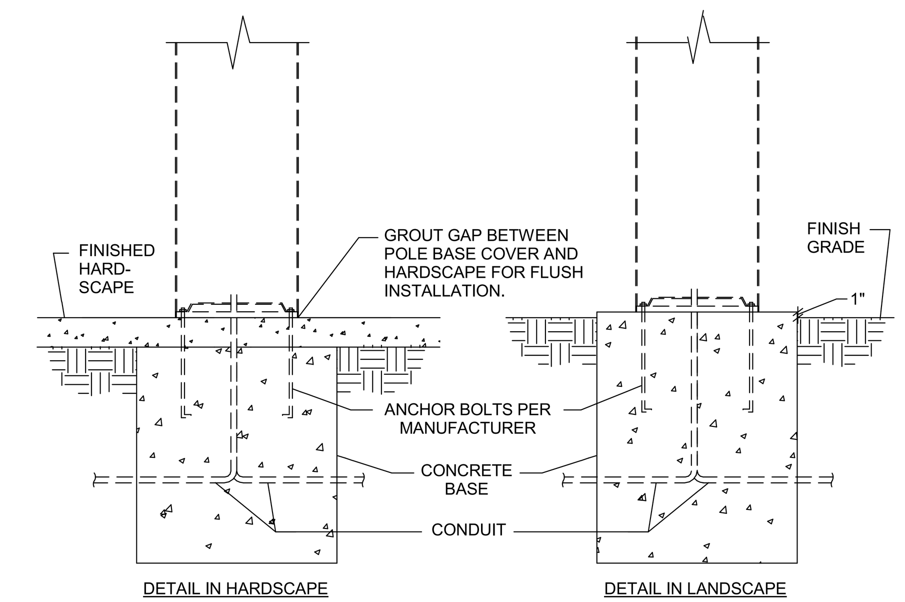

LIGHT BOLLARD BASE DETAIL (7)

SCALE: N.T.S.

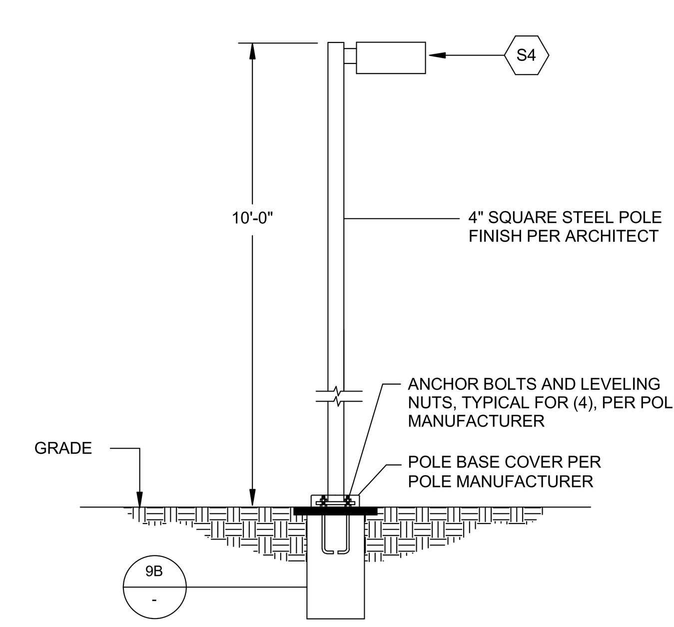

POST TOP FIXTURE DETAIL (9A)

SCALE: N.T.S.

IDENTIFICATION STAMP
DIV. OF THE STATE ARCHITECT
APP: 02-118630 INC:
REVIEWED FOR
SS ☐ FLS ☐ ACS ☑
DATE: 04/13/2021

OFFICE OF THE STATE FIRE MARSHAL
APPROVED FIRE AND PANIC ONLY
Approval of this plan does not authorize or approve any omission or deviation from applicable regulations. Final approval is subject to field inspection. One set of approved plans shall be available on the project site at all times.
PERMIT NO.: 20-N-2332-CP
REVIEWED BY: LITO CATAYLO, OSFM
DATE: 3/ /2021

GENERAL SERVICES
Department of General Services
State of California
Real Estate Services Division
Project Management & Development Branch
707 Third Street, Suite 4-105
West Sacramento, California 95605

NICHOLS MELBURG & ROSSETTO
ARCHITECTS + ENGINEERS
300 Knollcrest Drive
Redding, CA. 96002
(530) 222-3300 (530) 222-3538 FAX
http://www.nmrdesign.com

Copyright © 2019
All ideas, designs, arrangements and plans indicated or represented by this drawing are owned by, and the property of, NICHOLS, MELBURG and ROSSETTO and were created, evolved and developed for use on, and in conjunction with, the specified project. None of such ideas, designs, arrangements or plans shall be used by, or disclosed to any person, firm or corporation for any purpose whatsoever without the written permission of NICHOLS, MELBURG and ROSSETTO.

LICENSE STAMPS
REGISTERED PROFESSIONAL ENGINEER RAYMOND W. SWARTZ No. E15610 Ex. 12/31/2021 ELECTRICAL STATE OF CALIFORNIA
Date Signed: 3/25/2021

CONSULTANT
tk1sc COLLABORATIVE
11870 Pierce Street, Suite 160
Riverside, California 92505
951.299.4160 www.tk1sc.com
Project Leader - Jerry Leonhardt
Electrical Lead - Reid Cordry
tk1sc Job #:2019-0228A

DRAWING STATUS
CONSTRUCTION DOCUMENTS

ISSUE

No.	Date	Description
1	10/20/2020	INITIAL PLAN REVIEW
2	01/22/2021	AGENCY RESUBMITTAL
3	03/22/2021	AGENCY RESUBMITTAL

If drawing is not 30" x 42" it is a reduced print

PROJECT
RESIDENTIAL CENTER, UKIAH: REPLACEMENT OF EXISTING RESIDENTIAL CENTER
440 EAST HILL ROAD
WILLITS, CALIFORNIA 95490
MENDOCINO COUNTY
CALIFORNIA CONSERVATION CORP

Supervisor	Designed	Drawn
		Author

DSA Application No. 02-118630

SHEET TITLE
DETAILS

DGS Project Number 000000000001826
NMR Project Number 18-6456

Reference North: NORTH
Sheet Scale
Sheet Number E601

ISSUE DATE July 9, 2021

Plot Date: 3/23/2021 3:14:48 PM
File Name: BIM 360://CCC Willits Residential Center/E_CCC Willits_COMMON_2019-0228A.rvt

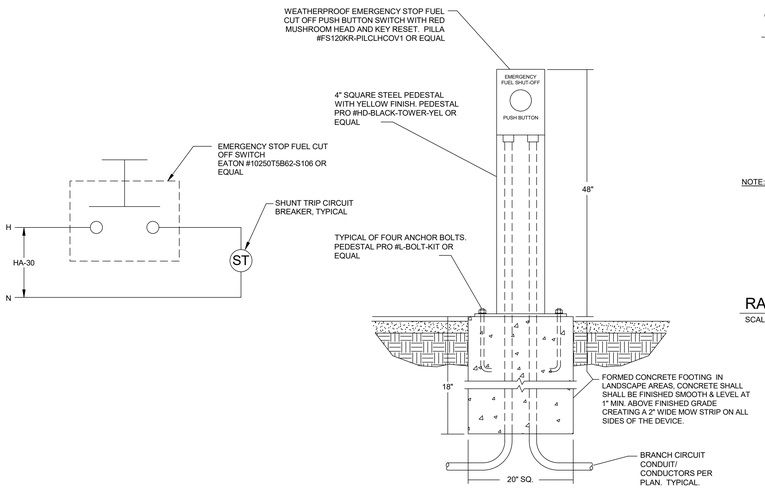

FUEL TANK EMERGENCY OFF PUSH BUTTON MOUNTING DETAIL

SCALE: N.T.S. — 7

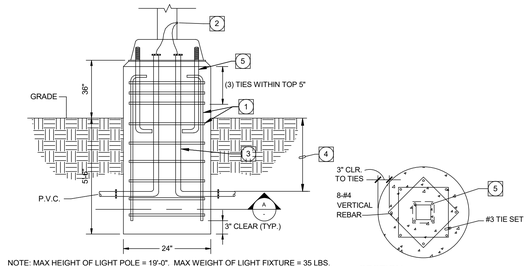

NOTE: MAX HEIGHT OF LIGHT POLE = 19'-0". MAX WEIGHT OF LIGHT FIXTURE = 35 LBS.

SECTION

1. 8-#4 VERTS WITH #3 TIES AT 6"O.C.
2. BOND EQUIPMENT GROUND TO POLE.
3. BRANCH CIRCUIT CONDUIT PER SITE PLAN.
4. PROVIDE MINIMUM COVER OF 24" FROM FINISH GRADE.
5. 3/4" x 25" POLE ANCHOR BOLTS, SPACING TO MATCH MANUFACTURER'S BASE PLATE.

RAISED POLE BASE DETAIL

SCALE: N.T.S. — 5

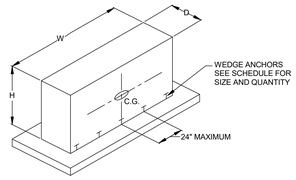

EQUIPMENT MOUNTING SCHEDULE

NAME	NEMA/ MNTG.	DIMENSIONS H	W	D	MAX. WEIGHT POUNDS	MINIMUM NUMBER OF ANCHORS	SIZE OF ANCHORS *	MINIMUM EMBEDMENT
MSA	3/F	90	159	43	4700	PER DETAIL 7/E603		
DBW	1/F	90	36	30	545	4	5/8"□	3-1/4"
PANEL-BOARDS	1/W	48	20	6	200	PER DETAIL 6A*, 6B, 6C/E602		
DBMP	1/F	90	36	30	545	4	5/8"□	3-1/4"
DBH, DBPV	3/F	90	36	43	1700	PER DETAIL 8/E602		
TA	1/F	43	35	27	710	4	3/8"□	2-3/4"
TE	1/F	43	35	27	710	4	3/8"□	2-3/4"
TH	3/F	71	51	44	3100	PER DETAIL 2/E602		
TMP	1/F	51	35	32	976	4	3/8"□	2-3/4"
TR	1/F	51	38	33	1239	4	3/8"□	2-3/4"
TW	1/F	51	35	32	976	4	3/8"□	2-3/4"
TMPK	1/F	37	27	24	409	4	3/8"□	2-3/4"
TSA	3/F	37	27	24	490	PER DETAIL 3/E603		
ATSMP	1/F	67	24	24	414	4	5/8"□	3-1/4"

* AT CONCRETE USE HILTI KWIK BOLT KB-TZ (ICC ESR 1917) AT CMU USE HILTI KWIK BOLT 3 (ICC ESR 1385). USE EQUIVALENT STAINLESS STEEL ANCHOR AT EXTERIOR LOCATIONS

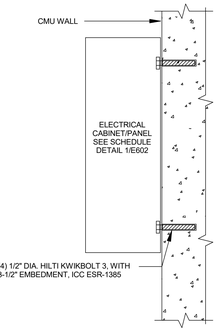

SURFACE MOUNTED PANEL MOUNTING DETAIL

SCALE: NTS — 6A

EQUIPMENT MOUNTING DETAIL

SCALE: NTS — 1

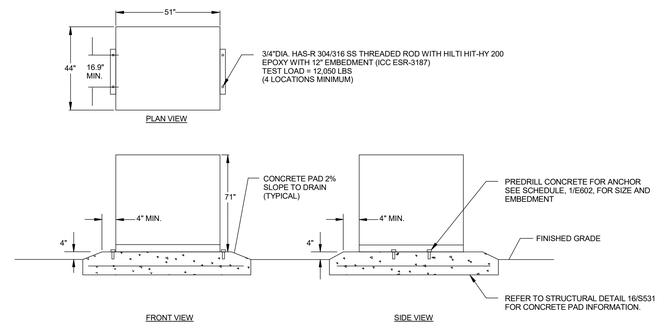

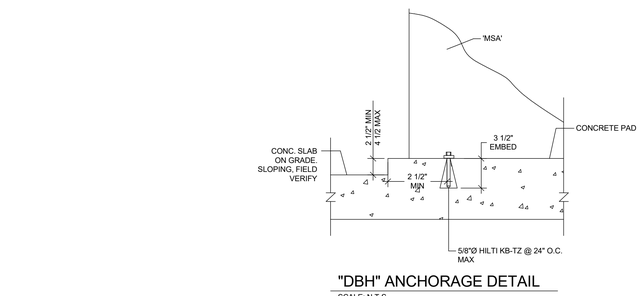

"DBH" ANCHORAGE DETAIL

SCALE: N.T.S.

SURFACE MOUNTED PANEL MOUNTING DETAIL

SCALE: NTS — 6B

TRANSFORMER "TH" MOUNTING DETAIL

SCALE: N.T.S. — 2

NOTES:

1. ELECTRICAL INSTALLATION SHALL CONFORM TO ALL CODES AND ORDINANCES. ALL ELECTRICAL EQUIPMENT SHALL BE NEMA TYPE 3R WATERPROOF FOR EXTERIOR INSTALLATION.
2. ELECTRICAL CONDUITS SHALL BE INSTALLED THROUGH THE BOTTOM OF CONCRETE PAD.

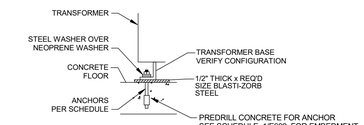

TRANSFORMER MOUNTING DETAIL

SCALE: N.T.S. — 3

PLAN VIEW

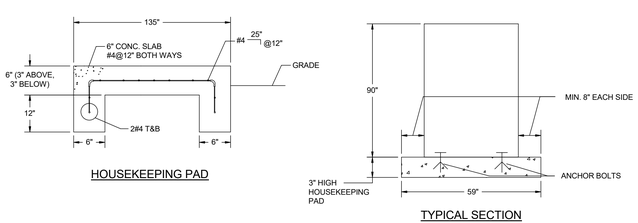

HOUSEKEEPING PAD

TYPICAL SECTION

SWITCHBOARD DBH, DBPV ANCHORAGE DETAIL

SCALE: N.T.S. — 8

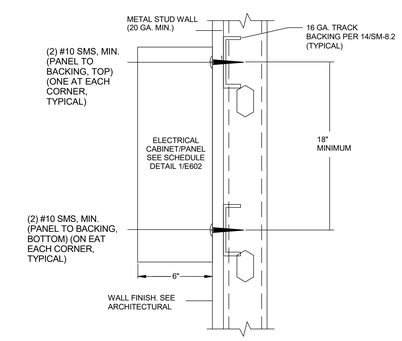

SURFACE MOUNTED PANEL MOUNTING DETAIL

SCALE: NTS — 6C

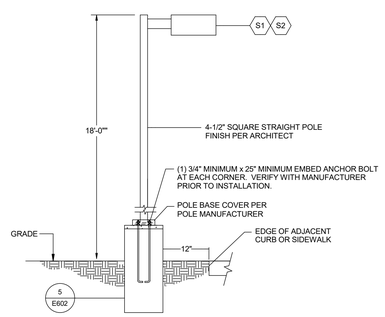

POLE MOUNTED FIXTURE DETAIL

SCALE: N.T.S. — 4

IDENTIFICATION STAMP
DIV. OF THE STATE ARCHITECT
APP: 02-118630 INC:
REVIEWED FOR
SS ☐ FLS ☐ ACS ☑
DATE: 04/13/2021

OFFICE OF THE STATE FIRE MARSHAL
APPROVED FIRE AND PANIC ONLY
Approval of this plan does not authorize or approve any omission or deviation from applicable regulations. Final approval is subject to field inspection. One set of approved plans shall be available on the project site at all times.
PERMIT NO.: 20-N-2332-CP
REVIEWED BY: LEO CATAYLO, OSFM
DATE: 4/1/2021

GENERAL SERVICES
Department of General Services
State of California
Real Estate Services Division
Project Management & Development Branch
707 Third Street, Suite 4-105
West Sacramento, California 95605

NICHOLS MELBURG & ROSSETTO ARCHITECTS + ENGINEERS
300 Knollcrest Drive
Redding, CA. 96002
(530) 222-3300 (530) 222-3538 FAX
http://www.nmrdesign.com

Copyright © 2019
All ideas, designs, arrangements and plans indicated or represented by this drawing are owned by, and the property of, NICHOLS, MELBURG and ROSSETTO and were created, evolved and developed for use on, and in connection with, the specified project. None of such ideas, designs, arrangements or plans shall be used by, or disclosed to any person, firm or corporation for any purpose whatsoever without the written permission of NICHOLS, MELBURG and ROSSETTO.

LICENSE STAMPS

REGISTERED PROFESSIONAL ENGINEER RAYMOND W. SWEETEN No. E15610 12/31/2021 STATE OF CALIFORNIA — Date Signed 3/25/2021

CONSULTANT

tklsc COLLABORATIVE

11870 Pierce Street, Suite 160
Riverside, California 92505
951.239.4160 www.tk1sc.com
Project Leader - Jerry Leonhardt
Electrical Lead - Reid Cordry
tk1sc Job #:2019-0228A

DRAWING STATUS
CONSTRUCTION DOCUMENTS

ISSUE

No.	Date	Description
1	10/20/2020	INITIAL PLAN REVIEW
2	01/22/2021	AGENCY RESUBMITTAL
3	03/22/2021	AGENCY RESUBMITTAL

If drawing is not 30" x 42" it is a reduced print

PROJECT
RESIDENTIAL CENTER, UKIAH: REPLACEMENT OF EXISTING RESIDENTIAL CENTER
440 EAST HILL ROAD
WILLITS, CALIFORNIA 95490
MENDOCINO COUNTY
CALIFORNIA CONSERVATION CORP

Supervisor	Designed	Drawn
		Author

DSA Application No.
02-118630

SHEET TITLE
DETAILS

DGS Project Number: 0000000000001826
NMR Project Number: 18-6456

Reference North: NORTH
Sheet Scale:
Sheet Number: E602

ISSUE DATE
July 9, 2021

Plot Date: 3/22/2021 9:00:14 AM
File Name: BIM 360://CCC Willits Residential Center/E_CCC Willits_COMMON_2019-0228A.rvt

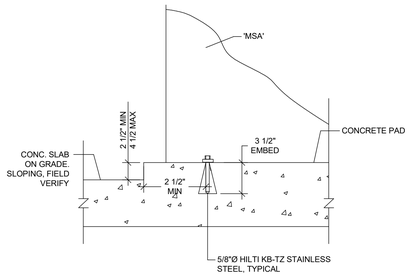

"MSA" ANCHORAGE DETAIL

SCALE: N.T.S.

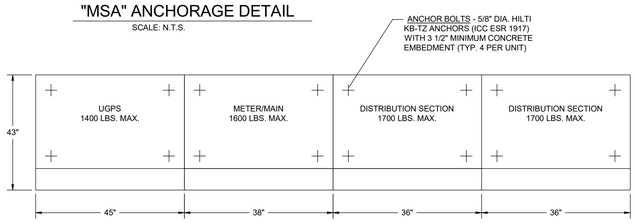

PLAN VIEW

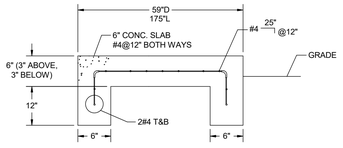

HOUSEKEEPING PAD

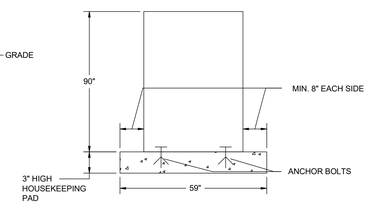

TYPICAL SECTION

SWITCHBOARD MSA ANCHORAGE DETAIL

SCALE: N.T.S.

7

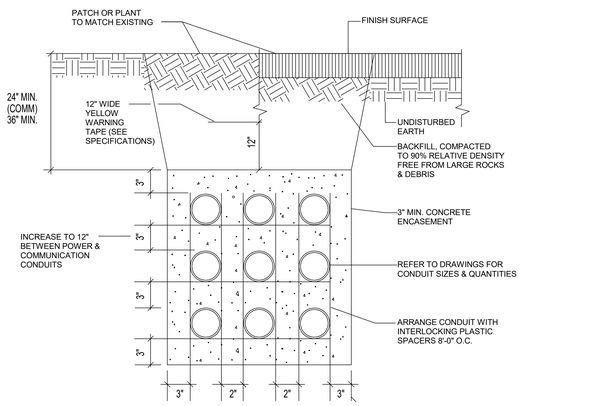

TYPICAL UNDERGROUND CONDUIT TRENCH DETAIL

SCALE: N.T.S.

8

DUAL PORT 30A/40A AMP LEVEL 2 COMMERCIAL CHARGING STATION PEDESTAL

	Dual Port 30A	Dual Port 40A
Model #	EVP-2002-30	EVP-2002-40
Power per Port	7.2 kW (240V AC @ 30A)	9.6 kW (240V AC @ 40A)
Electrical Service		
Power	240/208 VAC, 30A Load with 40A Branch Circuit Per Port	240/208 VAC, 40A Load with 50A Branch Circuit Per Port
Service Panel	40A Dual Breakers Per Port (No GFCI)	50A Dual Breakers Per Port (No GFCI)
Service Wiring	3-wire (L1, L2, Earth Ground)	
Functional Interfaces		
Connector Type	SAE J1772	
Charging Protocol	SAE J1772	
Standard Cable Length	18 ft	
Cable Retractor (opt)	Overhead retractor ADA compliant	
LCD Display	1500 nits 7" color, 800 x 480, UV protected	
Card Reader	ISO 14443 Type A&B, ISO 18092 NFC	
Vehicle to Grid (opt)	ISO 15118 (available Oct 2017)	
Safety and Connectivity		
Ground Fault Detection	5mA CCID trip with 3 x automatic restarts	
Detect Coupler Removal	SAE J1772™	
Power Measurement	Accuracy: ± 2% from 5% to full scale (30A/40A)	
Power Report Interval	Every 15 minute on the hour	
LAN (Optional)	2.4 GHz Wi-Fi (802.11 b/g/n)	
Wide Area Network	3G GSM, 3G CDMA	
Communication Protocols	BTCPower EVPump and OCPP	
Safety and Operation		
Enclosure Rating	NEMA 3R	
Regulatory Compliance	ETL certified for USA and cUL certified for Canada; complies with UL 2594, UL 2231-1, UL 2231-2, and NEC Article 625, EMC: FCC Part 15 Class A	
Operating Temperature	-30°C to +50°C (-22°F to 122°F)	
Storage Temperature	-30°C to +50°C (-22°F to 122°F)	
Humidity	90% non condensing	

- **DUAL PORT 30A/40A LEVEL 2**
- **CHARGING PROTOCOL: SAE J-1772**
- **7.2 KW / 9.6 KW PER PORT**
- **25 FT /18 FT W/ CABLE RETRACTOR**
- **NEMA 3R HOUSING**
- **RFID READER-OPTIONAL**
- **OCPP COMPLIANT-STANDARD**
- **GPRS MODEM-OPTIONAL**
- **7" COLOR SCREEN-STANDARD**
- **UL COMPLIANT--ETL CERTIFIED**

BTCPOWER WWW.BTCPOWER.COM 1719 GRAND AVE., SANTA ANA, CA 92705

TYPICAL EV CHARGER

SCALE: N.T.S.

4

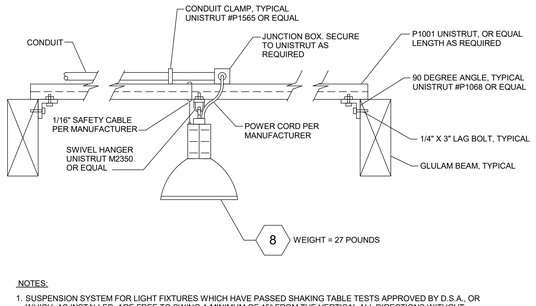

NOTES:

1. SUSPENSION SYSTEM FOR LIGHT FIXTURES WHICH HAVE PASSED SHAKING TABLE TESTS APPROVED BY D.S.A., OR WHICH, AS INSTALLED, ARE FREE TO SWING A MINIMUM OF 45° FROM THE VERTICAL ALL DIRECTIONS WITHOUT CONTACTING OBSTRUCTIONS, SHALL BE ASSUMED TO COMPLY WITH THE LATER-FORCE REQUIREMENTS OF SECTION 1632(a) TABLE 16A-O. UNLESS OF THE CABLE TYPE, FREE SWINGING SUSPENSION SYSTEMS SHALL HAVE A SAFETY WIRE OR CABLE ATTACHED TO THE FIXTURE AND TO THE STRUCTURE AT EACH SUPPORT, CAPABLE OF SUPPORTING FOUR (4) TIMES THE SUPPORTED LOAD, MINIMUM.
2. THE CONTRACTOR SHALL PROVIDE ALL NECESSARY BOLTS, NUTS, WASHERS, ETC. AS REQUIRED FOR A COMPLETE SYSTEM.

HIGH-BAY FIXTURE MOUNTING DETAIL

SCALE: N.T.S.

5

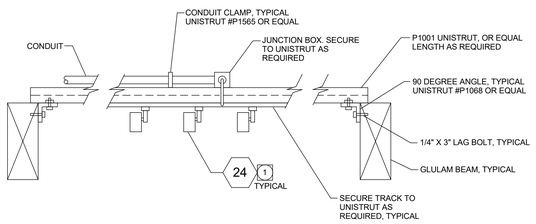

NOTES:

1 PROVIDE LENGTH OF TRACK AS SHOWN ON PLAN. PROVIDE TEN (10) FIXTURE HEADS.

TRACK LIGHTING MOUNTING DETAIL

SCALE: N.T.S.

6

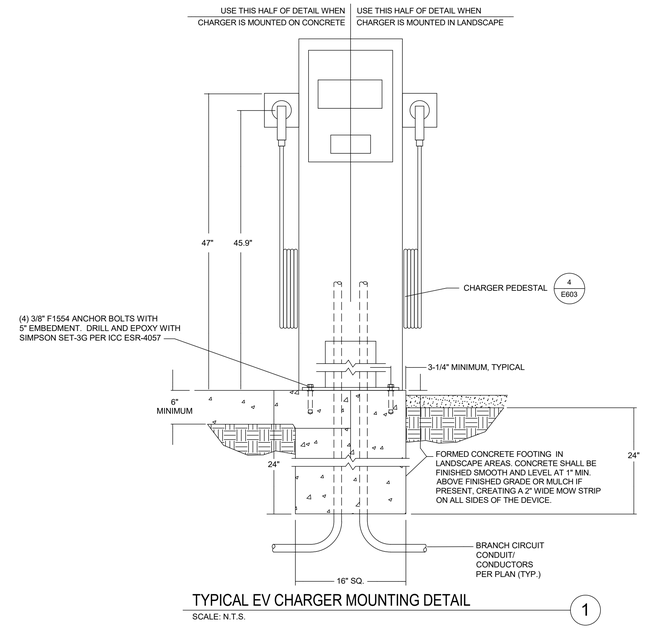

TYPICAL EV CHARGER MOUNTING DETAIL

SCALE: N.T.S.

1

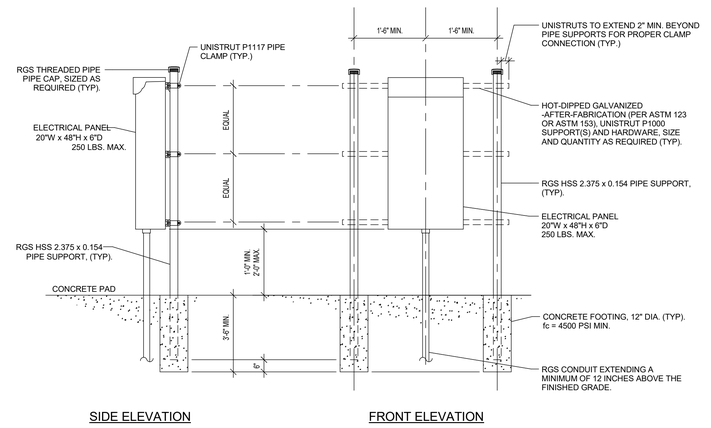

SIDE ELEVATION FRONT ELEVATION

TYPICAL UNISTRUT PANELBOARD / INVERTER / COMBINER MOUNTING DETAIL

SCALE: NTS

2

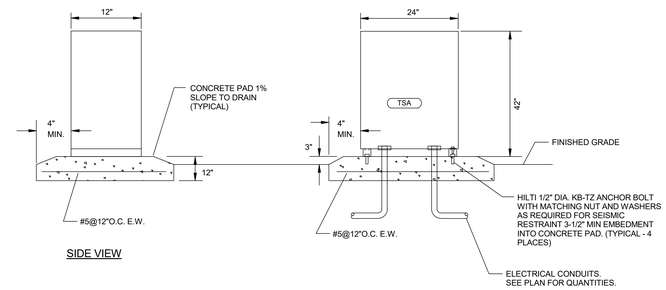

SIDE VIEW

NOTES:

1. ELECTRICAL INSTALLATION SHALL CONFORM TO ALL CITY CODES AND ORDINANCES. ALL ELECTRICAL EQUIPMENT SHALL BE NEMA TYPE 3R WATERPROOF FOR EXTERIOR INSTALLATION.
2. ELECTRICAL CONDUITS SHALL BE INSTALLED THROUGH THE BOTTOM OF CONCRETE PAD.

TRANSFORMER MOUNTING DETIAL

SCALE: N.T.S.

3

IDENTIFICATION STAMP
DIV. OF THE STATE ARCHITECT
APP: 02-118630 INC:
REVIEWED FOR
SS ☐ FLS ☐ ACS ☑
DATE: 04/13/2021

OFFICE OF THE STATE FIRE MARSHAL
APPROVED FIRE AND PANIC ONLY
Approval of this plan does not authorize or approve any omission or deviation from applicable regulations. Final approval is subject to field inspection. One set of approved plans shall be available on the project site at all times.
PERMIT NO.: 36-N-2332-CP
REVIEWED BY: LEO CATAYLO, OSFM
DATE: 4 / /2021

DGS GENERAL SERVICES
Department of General Services
State of California
Real Estate Services Division
Project Management & Development Branch
707 Third Street, Suite 4-105
West Sacramento, California 95605

NICHOLS MELBURG & ROSSETTO ARCHITECTS + ENGINEERS
300 Knollcrest Drive
Redding, CA. 96002
(530) 222-3300 (530) 222-3538 FAX
http://www.nmrdesign.com

Copyright © 2019
All ideas, designs, arrangements and plans indicated or represented by this drawing are owned by, and the property of, NICHOLS, MELBURG and ROSSETTO and were created, evolved and developed for use on, and in conjunction with, the specified project. None of such ideas, designs, arrangements or plans shall be used by, or disclosed to any person, firm or corporation for any purpose whatsoever without the written permission of NICHOLS, MELBURG and ROSSETTO.

LICENSE STAMPS

REGISTERED PROFESSIONAL ENGINEER RAYMOND W. SWIFT No. E15610 EXP. 12/31/2021 CIVIL STATE OF CALIFORNIA
Date Signed: 3/25/2021

CONSULTANT
tk1sc COLLABORATIVE
11870 Pierce Street, Suite 160
Riverside, California 92505
951.299.4160 www.tk1sc.com
Project Leader - Jerry Leonhardt
Electrical Lead - Reid Cordry
tk1sc Job #:2019-0228A

DRAWING STATUS
CONSTRUCTION DOCUMENTS

ISSUE

No.	Date	Description
1	10/20/2020	INITIAL PLAN REVIEW
2	01/22/2021	AGENCY RESUBMITTAL
3	03/22/2021	AGENCY RESUBMITTAL

If drawing is not 30" x 42" it is a reduced print

PROJECT
RESIDENTIAL CENTER, UKIAH: REPLACEMENT OF EXISTING RESIDENTIAL CENTER
440 EAST HILL ROAD
WILLITS, CALIFORNIA 95490
MENDOCINO COUNTY
CALIFORNIA CONSERVATION CORP

Supervisor	Designed	Drawn
		Author

DSA Application No.
02-118630

SHEET TITLE
DETAILS

DGS Project Number: 000000000001826
NMR Project Number: 18-6456

Reference North: NORTH
Sheet Scale:
Sheet Number: E603

ISSUE DATE
July 9, 2021

Plot Date: 3/22/2021 9:00:15 AM
File Name: BIM 360://CCC Willits Residential Center/E_CCC Willits_COMMON_2019-0228A.rvt

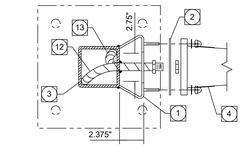

TOP VIEW - SECTION A-A

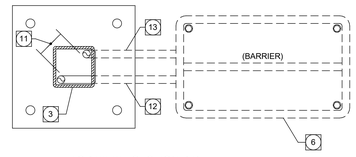

TOP VIEW - SECTION B-B

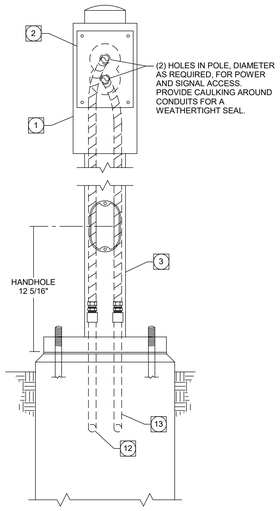

FRONT VIEW

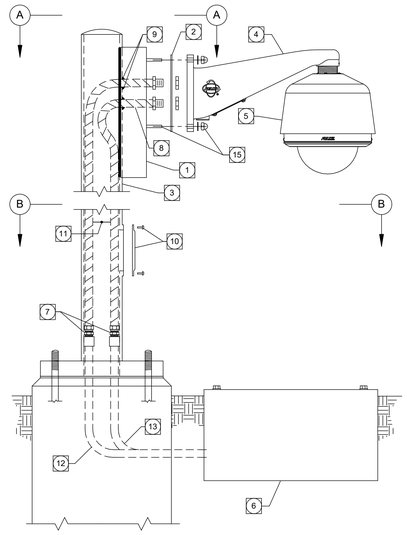

SIDE VIEW

CAMERA POLE (CAMERA ONLY) CAMERA MOUNTING DETAIL

SCALE: 2" = 1'-0" — 2

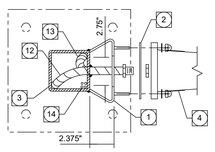

TOP VIEW - SECTION A-A

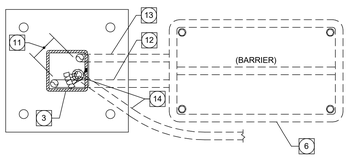

TOP VIEW - SECTION B-B

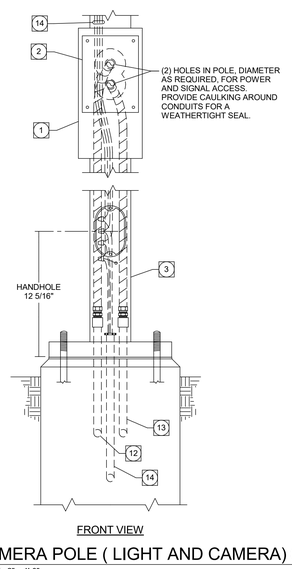

FRONT VIEW

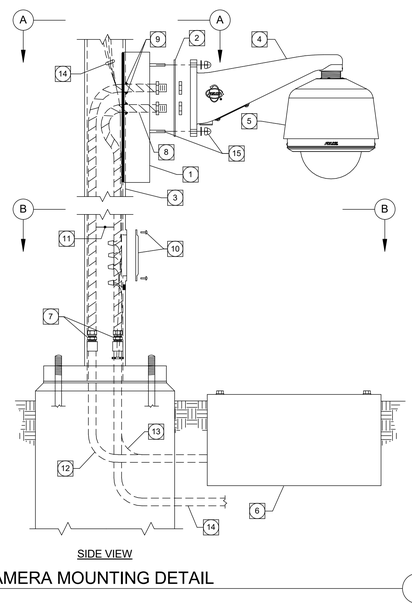

SIDE VIEW

CAMERA POLE (LIGHT AND CAMERA) CAMERA MOUNTING DETAIL

SCALE: 2" = 1'-0" — 1

KEY NOTES:

1. PELCO #PA402 MOUNT (WHEN MOUNTING TO ALUMINIUM POLES) PROVIDED BY SECURITY CONTRACTOR OR CUSTOM-FABRICATED STEEL VERSION OF PELCO MOUNTING PLATE (WHEN MOUNTING TO STEEL POLES) PROVIDED BY ELECTRICAL CONTRACTOR, WELDED TO POLE BY POLE MANUFACTURER. PLATE FINISH TO MATCH POLE FINISH. THIS IS A CRITICAL COORDINATION ITEM. NO ADDITIONAL COSTS WILL BE ACCEPTED BY THE OWNER FOR FAILURE OF THE SECURITY CONTRACTOR TO COORDINATE THIS EFFORT AS REQUIRED BY PROJECT SCHEDULE.
2. CUSTOM FABRICATED BEZEL PLATE. 7.5"H X 5.5"W X .125" WITH (4) 1/4" DIA. AND (2) 1/2" DIA. HOLES. PAINT TO MATCH POLE.
3. POLE TO MATCH SITE LIGHTING FIXTURE POLES IN ALL OTHER ASPECTS EXCEPT FOR ANY ADDITIONAL REINFORCEMENT AS REQUIRED BY LIGHT POLE MANUFACTURER TO SUPPORT CAMERA AND MOUNTING HARDWARE.
4. CAMERA MOUNT (PELCO #WM24-XX CUSTOM) OR EQUAL. PROVIDE 120V/24VAC TRANSFORMER WITHIN CAMERA MOUNT. PROVIDE CUSTOM POWDERCOAT FINISH TO MATCH POLE. (BY SECURITY CONTRACTOR).
5. CAMERA ENCLOSURE. PROVIDE CUSTOM POWDERCOAT FINISH TO MATCH POLE. (BY SECURITY CONTRACTOR).
6. BARRIERED PULL BOX WITH BOLT-DOWN COVER EQUIPPED WITH TAMPER-PROOF BOLT HEADS. SEE SITE SECURITY PLAN FOR ACTUAL LOCATION.
7. TRANSITION FROM 3/4" PVC TO GREY 3/4" LIQUID TIGHT METAL CONDUIT VIA FEMALE PVC TO LIQUID TIGHT CONNECTORS. ROUTE UP POLE AND FASTEN TO CUSTOM BEZEL PLATE. ROUTE L.V. SIGNAL CONDUCTORS TO CAMERA IN THIS CONDUIT RUN.
8. PROVIDE 24" LONG GREY 3/4" LIQUID TIGHT METAL CONDUIT FASTENED AT CUSTOM BEZEL PLATE END PASSING THRU POLE FOR POWER CONDUCTORS.
9. PROVIDE SILICON BUSHING AROUND CONDUITS AT THE PASS THRU POLE. PROVIDE SILICON CAULKING AS REQUIRED TO SUPPLEMENT GASKETING.
10. HANDHOLE COVER WITH TAMPER PROOF SCREWS.
11. STUB/ROUTE SIGNAL CONDUITS AS FAR FROM POWER CONDUITS/CONDUCTORS AS POSSIBLE.
12. SIGNAL CONDUIT FOR CAMERA.
13. 120V. CONDUIT FOR CAMERA.
14. CONDUIT/WIRING FOR LIGHTING.
15. MOUNTING STUDS SHALL BE SHORT ENOUGH TO ALLOW USE OF CAP OR ACORN NUTS IN LIEU OF STANDARD NUTS.

SPECIFIC INSTALLATION REQUIREMENTS:

1. WHEN CAMERAS ARE SHOWN ADDED TO EXISTING POLE(S), CONTRACTOR TO INCLUDE ALL COSTS TO:
   a. COORDINATE ANY POLE MODIFICATIONS WITH ORIGINAL POLE MANUFACTURER TO DETERMINE SUITABILITY OF MODIFICATIONS PRIOR TO MAKING MODIFICATIONS. THIS EFFORT SHALL INCLUDE DETERMINATION OF POLE STRENGTH BASED ON 100 MPH WINDS OR HIGHER BASED LOCATION AND EFFECTIVE PROJECTED AREA OF ALL POLE MOUNTED DEVICES SUCH AS LIGHT FIXTURES, BANNERS AND CAMERAS, ETC.
      - SHOULD EXISTING POLES BE FOUND TO BE UNSUITABLE FOR MODIFICATION, CONTRACTOR SHALL INCLUDE ALL COST IN BASE BID TO REPLACE POLES WITH NEW POLES OF MATCHING STYLE - PAINT/FINISH TO MATCH EXISTING POLE FINISHES - CAPABLE OF SUPPORTING CAMERA INSTALLATION AND ANY EXISTING POLE-MOUNTED DEVICES. ADDITIONALLY, REFINISH ANY EXISTING POLE-MOUNTED DEVICES TO MATCH NEW POLE FINISH.
      - SHOULD EXISTING POLES BE FOUND TO BE SUITABLE FOR MODIFICATION, REMOVE POLES FROM BASES TO MAKE NECESSARY MODIFICATIONS TO POLE INCLUDING, BUT NOT LIMITED TO, WELDING CAMERA BRACKETS, CUTTING HOLES, ROUTING CONDUITS, ETC. POLE PAINT/FINISH TO MATCH EXISTING POLE FINISH. ADDITIONALLY, REFINISH ANY EXISTING POLE-MOUNTED DEVICES TO MATCH MODIFIED POLE FINISH.
   b. DEMOLISH/REPLACE (E) POLE BASES IN ORDER TO ROUTE ANY SECUIRTY CAMERA AND/OR CAMERA POWER CONDUITS THRU POLE BASE AND INTO POLE. NEW POLE BASES SHALL BE DESIGNED BY A LICENSED STRUCTURAL ENGINEER HIRED BY THE CONTRACTOR.
   c. INCLUDE ALL COST TO REPLACE/REPAIR/EXTEND EXISTING CONDUCTORS AS REQUIRED TO RESTORE SERVICE TO LIGHTING, POWER AND/OR SIGNAL SYSTEMS. CONTRACTOR SHALL MAKE ALL NECESSARY PROVISIONS TO MAINTAINING SUCH SERVICES DURING CONSTRUCTION USING SUITABLE TEMPORARY WIRING/CONNECTIONS. WHERE REMOVAL OF LIGHT POLES REDUCES LIGHT LEVELS OUTSIDE CONSTRUCTION ZONE BOUNDARIES, CONTRACTOR SHALL INCLUDE ALL COSTS TO PROVIDE TEMPORARY LIGHTING TO MAINTAIN EXISTING LIGHT LEVELS TO THE SATIFACTION OF THE OWNER AND/OR LOCAL AHJ.
   d. INSTALL POLES AS REQUIRED TO INCLUDE ANY POLE-MOUNTED DEVICES SUCH AS LIGHT FIXTURES, BANNERS, SPEAKERS, CAMERAS, ETC.
2. CONTRACTOR SHALL SUPPLY A COMPLETELY COORDINATED SUBMITTAL DRAWING WITH POLE SUBMITTAL AND, IF APPLICABLE, LIGHTING FIXTURE SUBMITTAL, DEPICTING A COMPLETE AND USABLE LIGHT POLE - MOUNTED CAMERA MOUNTING DETAIL DEPICTING ALL POLE OPENINGS, MOUNTING HEIGHT OF CAMERA ABOVE GRADE, AND ORIENTATION OF CAMERA MOUNTING IN RELATIONSHIP TO LIGHTING FIXTURES. SUBMITTAL SHALL ALSO CONTAIN CAMERA ARM CUTSHEET(S), POLE MOUNTING HARDWARE CUTSHEET(S), CUSTOM COLORS SWATCHES, POWDERCOATING SOURCE, ETC. COORDINATE ENTIRE INSTALLATION WITH ALL OTHER REQUIRED TRADES. ADDITIONALLY, IF NEW POLE BASES ARE REQUIRED, SUBMITTAL SHALL CONTAIN POLE BASE DRAWINGS, DETAILS, AND CALCULATIONS STAMPED BY A LICENSED STRUCTURAL ENGINEER.

GENERAL INSTALLATION REQUIREMENTS:

1. THE CONTRACTOR SHALL BE RESPONSIBLE FOR THE FURNISHING OF ALL MATERIAL, LABOR, EQUIPMENT, AND SERVICES, IN CONNECTION WITH THE INSTALLATION OF A COMPLETE AND FULLY FUNCTIONING AND CODE COMPLIANT INSTALLATION.
2. IT IS THE INTENT OF THE CONTRACT DOCUMENTS, WHICH ARE PRESENTED IN A DIAGRAMMATIC FORMAT, TO PROVIDE CONTRACTOR INFORMATION THAT SUPPLEMENTS AND ENHANCES THE GENERALLY ACCEPTED CONSTRUCTION MEANS, METHODS, TECHNIQUES, SEQUENCES AND PROCEDURES EMPLOYED IN CONNECTION WITH INSTALLATION OF THIS TYPE OF PRODUCT / SYSTEM.
3. THE CONTRACTOR SHALL ALSO INCORPORATE THE REQUIREMENTS OF THE MANUFACTURER'S INSTALLATION INSTRUCTIONS / WARRANTY REQUIREMENTS AS PART OF THE REQUIREMENTS OF THE CONSTRUCTION DOCUMENTS. IN THE EVENT OF A CONFLICT BETWEEN THE CONTRACT DOCUMENT REQUIREMENTS AND THE MANUFACTURER'S INSTALLATION REQUIREMENTS, THE MORE STRINGENT REQUIREMENTS SHALL APPLY - UNLESS THE MORE STRINGENT REQUIREMENT VOIDS APPLICABLE WARRANTIES OR VIOLATES THE REQUIREMENTS OF THE LOCAL AUTHORITY HAVING JURISDICTION (AHJ). ANY SUCH CONFLICT SHALL IMMEDIATELY BE BROUGHT TO THE ATTENTION OF THE ENGINEER IN WRITING THROUGH THE FORMAL RFI PROCESS.
4. REFER TO THE ASSOCIATED SCHEDULES, SCHEMATICS, DRAWINGS, AND SPECIFICATIONS FOR DETAILED INFORMATION / REQUIREMENTS ON THIS PRODUCT / SYSTEM.

IDENTIFICATION STAMP
DIV. OF THE STATE ARCHITECT
APP: 02-118630 INC:
REVIEWED FOR
SS ☐ FLS ☐ ACS ☑
DATE: 04/13/2021

OFFICE OF THE STATE FIRE MARSHAL
APPROVED FIRE AND PANIC ONLY
Approval of this plan does not authorize or approve any omission or deviation from applicable regulations. Final approval is subject to field inspection. One set of approved plans shall be available on the project site at all times.
PERMIT NO.: 20-N-2332-CP
REVIEWED BY: LEO CATAYLO, OSFM
DATE: 4/ /2021

DGS GENERAL SERVICES
Department of General Services
State of California
Real Estate Services Division
Project Management & Development Branch
707 Third Street, Suite 4-105
West Sacramento, California 95605

NICHOLS MELBURG & ROSSETTO ARCHITECTS + ENGINEERS
300 Knollcrest Drive
Redding, CA. 96002
(530) 222-3300 (530) 222-3538 FAX
http://www.nmrdesign.com

Copyright © 2019
All ideas, designs, arrangements and plans indicated or represented by this drawing are owned by, and the property of, NICHOLS, MELBURG and ROSSETTO and were created, evolved and developed for use on, and in connection with, the specified project. None of such ideas, designs, arrangements or plans shall be used by, or disclosed to any person, firm or corporation for any purpose whatsoever without the written permission of NICHOLS, MELBURG and ROSSETTO.

LICENSE STAMPS

REGISTERED PROFESSIONAL ENGINEER RAYMOND W. SWIFT No. E15610 12/31/2021 ELECTRICAL STATE OF CALIFORNIA
Date Signed: 3/25/2021

CONSULTANT
tk1sc COLLABORATIVE
11870 Pierce Street, Suite 160
Riverside, California 92505
951.299.4160 www.tk1sc.com
Project Leader - Jerry Leonhardt
Electrical Lead - Reid Cordry
tk1sc Job #:2019-0228A

DRAWING STATUS
CONSTRUCTION DOCUMENTS

ISSUE

No.	Date	Description
1	10/20/2020	INITIAL PLAN REVIEW
2	01/22/2021	AGENCY RESUBMITTAL
3	03/22/2021	AGENCY RESUBMITTAL

If drawing is not 30" x 42" it is a reduced print

PROJECT
RESIDENTIAL CENTER, UKIAH: REPLACEMENT OF EXISTING RESIDENTIAL CENTER
440 EAST HILL ROAD
WILLITS, CALIFORNIA 95490
MENDOCINO COUNTY
CALIFORNIA CONSERVATION CORP

Supervisor	Designed	Drawn
		Author

DSA Application No.
02-118630

SHEET TITLE
DETAILS

DGS Project Number: 00000000001826
NMR Project Number: 18-6456

Reference North: NORTH
Sheet Scale:
Sheet Number: E604

ISSUE DATE
July 9, 2021

Plot Date: 3/22/2021 9:00:16 AM
File Name: BIM 360://CCC Willits Residential Center/E_CCC Willits_COMMON_2019-0228A.rvt

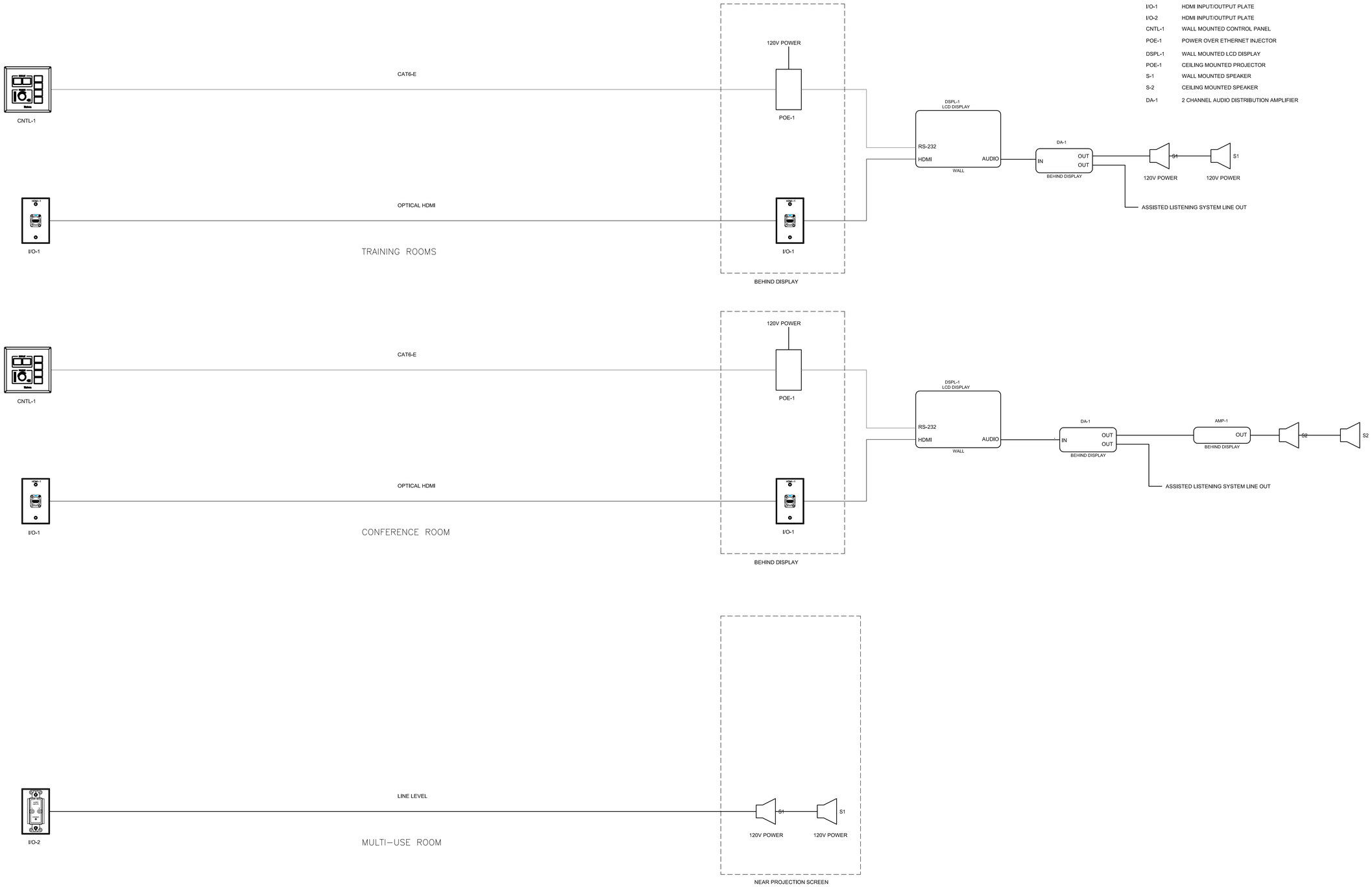

IDENTIFICATION STAMP
DIV. OF THE STATE ARCHITECT
APP: 02-118630 INC:
REVIEWED FOR
SS ☐ FLS ☐ ACS ☑
DATE: 04/13/2021

OFFICE OF THE STATE FIRE MARSHAL
APPROVED FIRE AND PANIC ONLY
Approval of this plan does not authorize or approve any omission or deviation from applicable regulations. Final approval is subject to field inspection. One set of approved plans shall be available on the project site at all times.
PERMIT NO.: 28 N 2332-CP
REVIEWED BY: LEO CATALLO, OSFM
DATE: 4/ 1 /2021

GENERAL SERVICES
Department of General Services
State of California
Real Estate Services Division
Project Management & Development Branch
707 Third Street, Suite 4-105
West Sacramento, California 95605

NICHOLS MELBURG & ROSSETTO
ARCHITECTS + ENGINEERS
300 Knollcrest Drive
Redding, CA. 96002
(530) 222-3300 (530) 222-3538 FAX
http://www.nmrdesign.com

Copyright © 2019
All ideas, designs, arrangements and plans indicated or represented by this drawing are owned by, and the property of, NICHOLS, MELBURG and ROSSETTO and were created, evolved and developed for use on, and in connection with, the specified project. None of such ideas, designs, arrangements or plans shall be used by, or disclosed to any person, firm or corporation for any purpose whatsoever without the written permission of NICHOLS, MELBURG and ROSSETTO.

LICENSE STAMPS

REGISTERED PROFESSIONAL ENGINEER
RAYMOND W. SWEETZER
No. E15610
12/31/2021
ELECTRICAL
STATE OF CALIFORNIA
Date Signed: 3/25/2021

CONSULTANT

tk1sc COLLABORATIVE
11870 Pierce Street, Suite 160
Riverside, California 92505
951.299.4160 www.tk1sc.com
Project Leader - Jerry Leonhardt
Electrical Lead - Reid Cordry
tk1sc Job #:2019-0228A

DRAWING STATUS
CONSTRUCTION DOCUMENTS

ISSUE

No.	Date	Description
1	10/20/2020	INITIAL PLAN REVIEW
2	01/22/2021	AGENCY RESUBMITTAL
3	03/22/2021	AGENCY RESUBMITTAL

If drawing is not 30" x 42" it is a reduced print

PROJECT
RESIDENTIAL CENTER, UKIAH: REPLACEMENT OF EXISTING RESIDENTIAL CENTER
440 EAST HILL ROAD
WILLITS, CALIFORNIA 95490
MENDOCINO COUNTY
CALIFORNIA CONSERVATION CORP

Supervisor	Designed	Drawn
		Author

DSA Application No.
02-118630

SHEET TITLE
AV DETAILS

DGS Project Number
000000000001826
NMR Project Number
18-6456

Reference North
NORTH
Sheet Scale
Sheet Number
E605

ISSUE DATE
July 9, 2021

Plot Date: 3/22/2021 9:00:18 AM
File Name: BIM 360://CCC Willits Residential Center/E_CCC Willits_COMMON_2019-0228A.rvt

CTRL-1	WALL MOUNTED CONTROL PANEL
DSPL-1	WALL MOUNTED LCD DISPLAY
S-1	WALL MOUNTED SPEAKER
S-2	POWERED SUBWOOFER
AMP-1	8 CHANNEL AUDIO AMPLIFIER
SSP-1	SURROUND SOUND PROCESSOR
TP-1	WALL MOUNTED AV CONTROLLER

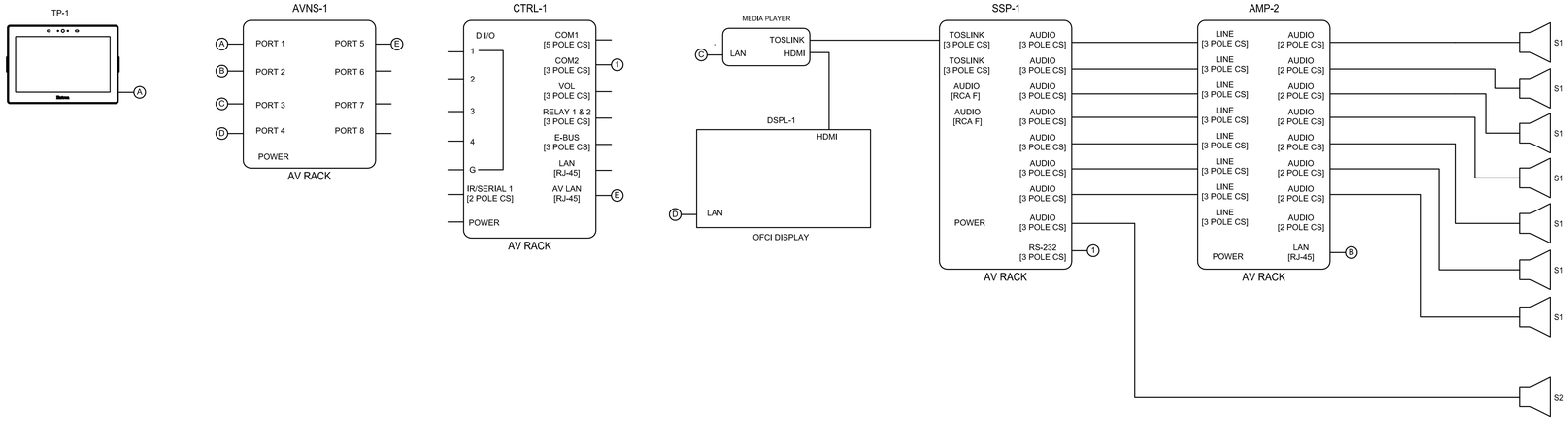

RECREATION BUILDING – TV ROOM

IDENTIFICATION STAMP
DIV. OF THE STATE ARCHITECT
APP: 02-118630 INC:
REVIEWED FOR
SS ☐ FLS ☐ ACS ☑
DATE: 04/13/2021

OFFICE OF THE STATE FIRE MARSHAL
APPROVED FIRE AND PANIC ONLY
Approval of this plan does not authorize or approve any omission or deviation from applicable regulations. Final approval is subject to field inspection. One set of approved plans shall be available on the project site at all times.
PERMIT NO.: 28 N 2332-CP
REVIEWED BY: LEO CATAYLO, OSFM
DATE: 4/1/2021

GENERAL SERVICES
Department of General Services
State of California
Real Estate Services Division
Project Management & Development Branch
707 Third Street, Suite 4-105
West Sacramento, California 95605

NICHOLS MELBURG & ROSSETTO
ARCHITECTS + ENGINEERS
300 Knollcrest Drive
Redding, CA. 96002
(530) 222-3300 (530) 222-3538 FAX
http://www.nmrdesign.com

Copyright © 2019
All ideas, designs, arrangements and plans indicated or represented by this drawing are owned by, and the property of, NICHOLS, MELBURG and ROSSETTO and were created, evolved and developed for use on, and in connection with, the specified project. None of such ideas, designs, arrangements or plans shall be used by, or disclosed to any person, firm or corporation for any purpose whatsoever without the written permission of NICHOLS, MELBURG and ROSSETTO.

LICENSE STAMPS

REGISTERED PROFESSIONAL ENGINEER
RAYMOND W. SWOLF
No. E15610
12/31/2021
ELECTRICAL
STATE OF CALIFORNIA
Date Signed: 3/25/2021

CONSULTANT

tk1sc
COLLABORATIVE
11870 Pierce Street, Suite 160
Riverside, California 92505
951.299.4160 www.tk1sc.com
Project Leader - Jerry Leonhardt
Electrical Lead - Reid Cordry
tk1sc Job #:2019-0228A

DRAWING STATUS
CONSTRUCTION DOCUMENTS

ISSUE

No.	Date	Description
1	10/20/2020	INITIAL PLAN REVIEW
2	01/22/2021	AGENCY RESUBMITTAL
3	03/22/2021	AGENCY RESUBMITTAL

If drawing is not 30" x 42" it is a reduced print

PROJECT
RESIDENTIAL CENTER, UKIAH: REPLACEMENT OF EXISTING RESIDENTIAL CENTER
440 EAST HILL ROAD
WILLITS, CALIFORNIA 95490
MENDOCINO COUNTY
CALIFORNIA CONSERVATION CORP

Supervisor	Designed	Drawn
		Author

DSA Application No.
02-118630

SHEET TITLE
AV DETAILS

DGS Project Number: 000000000001826
NMR Project Number: 18-6456

Reference North: NORTH
Sheet Scale:
Sheet Number: E606

ISSUE DATE
July 9, 2021

Plot Date: 3/22/2021 9:00:19 AM
File Name: BIM 360://CCC Willits Residential Center/E_CCC Willits_COMMON_2019-0228A.rvt

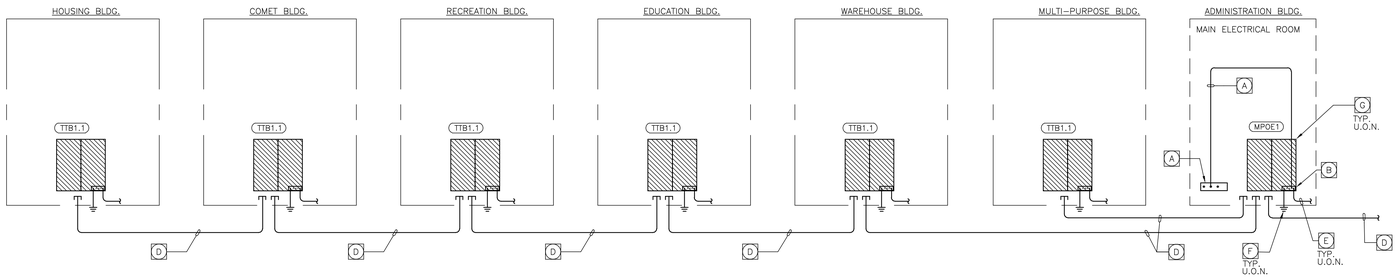

TELECOM PATHWAYS & GROUNDING RISER DIAGRAM NOTES

A. PROVIDE TELECOMMUNICATIONS BONDING CONDUCTOR (TBC) CONSISTING OF (1) 1"C., W/ #3/0 WITH GREEN INSULATION. CONNECTING MAIN BUILDING GROUND BUS BAR LOCATED IN MAIN ELECTRICAL ROOM TO THE TELECOMMUNICATIONS MAIN GROUNDING BUSBAR (TMGB) UTILIZING 2-HOLE COMPRESSION CONNECTORS. LABEL EACH END OF TBC WITH A GROUND WARNING TAG (PANDUIT #PT-BGRND OR EQUAL). IF THE LENGTH OF THE TBC IS LESS THAN 100 FT PROVIDE A #1/0 WITH GREEN INSULATION IN LIEU OF A #3/0. BOND EACH END OF METAL CONDUIT TO TBC W/#6 WITH GREEN INSULATION

B. ANSI-J-STD 607A COMPLIANT U.L.-LISTED TELECOMMUNICATIONS MAIN GROUND BUSBAR (TMGB). (CHATSWORTH #40153-020 OR EQUAL BY HARGER). PROVIDE 1/8" BRASS ENGRAVED NAMEPLATE WITH ABBREVIATION "T.M.G.B.". ATTACH NAMEPLATE TAG TO BUS BAR.

C. NOT USED.

D. BUILDING INTERCONNECT AND UTILITY COMPANIES/SERVICE PROVIDERS. SEE SITE PLANS FOR MORE INFORMATION.

E. #6 WITH GREEN INSULATION TO EACH DATA EQUIPMENT RACK/CABINET, OVERHEAD LADDER TRAY/LADDER RACK, TELECOMMUNICATIONS CONDUITS, TELECOMMUNICATIONS CABLE TRAY(S), ANTI STATIC TILE GROUNDING POINTS ETC. AS REQUIRED. CONNECTIONS SHALL BE MADE WITH 2 HOLE COMPRESSION CONNECTORS. CONDUIT SLEEVES LESS THAN 10 FEET LONG DO NOT REQUIRE BONDING TO THE TMGB/TGB. ALL CONNECTIONS SHALL BE BARE METAL TO BARE METAL USING APPROPRIATE ANTIOXIDANT COMPOUND.

F. 1/2"C., 1#6 GROUND CONDUCTOR WITH GREEN INSULATION EXOTHERMICALLY CONNECTED TO NEAREST EFFECTIVELY GROUNDED BUILDING STEEL AND TO TMGB/TGB(S) VIA 2-HOLE COMPRESSION CONNECTION.

G. TELECOMMUNICATIONS BACKBOARD CONSISTING OF FIRE-RATED, EXTERIOR GRADE, DOUGLAS FIR PLYWOOD SHEETING FINISHED ONE SIDE AND PRIME COAT PAINTED ON ALL SURFACES WITH A FINISH COAT OF FIRE RETARDANT WHITE ENAMEL PAINT. LEAVE ONE (1) FIRE MARSHAL STAMP UNPAINTED FOR INSPECTION ON EACH PLYWOOD SHEET. UNLESS OTHERWISE INDICATED, USE 8'-0" HIGH X LENGTH AS SHOWN ON DRAWINGS X 3/4" THICK PLYWOOD. PLYWOOD SHALL BE RAISED 12" AFF.

COMMUNICATIONS PATHWAYS GENERAL NOTES:

1. CONDUITS SHALL, (a) CONTAIN NO CONTINUOUS SECTIONS LONGER THAN 30M (98 FT.) AND, (b) CONTAIN NO MORE THAN (2) 90° BENDS OR (1) REVERSE BEND WITHOUT INSTALLING A PULLBOX. CONDULETS IN PLACE OF PULLBOXES ARE UNACCEPTABLE.
2. CONDUITS SHALL CONTAIN PLASTIC OR NYLON PULL TAPE RATED AT 200 LBS. WITH A MINIMUM OF 5 FEET OF EXTRA PULL TAPE COILED AND SECURED AT EACH END.
3. CONDUIT BEND RADIUS SHALL BE (a) A MINIMUM OF 6 TIMES THE INTERNAL CONDUIT DIAMETER FOR CONDUITS 2" IN DIAMETER OR LESS, AND, (b) 10 TIMES THE INTERNAL CONDUIT DIAMETER FOR CONDUITS MORE THAN 2" IN DIAMETER.
4. TERMINATE CONDUITS AND SLEEVES THAT PROTRUDE THROUGH STRUCTURAL FLOORS 3"-4" MAXIMUM ABOVE THE FLOOR SURFACE.
5. INSTALL BUSHINGS AND BELL ENDS AS REQUIRED ON ALL CONDUITS.
6. FLEX CONDUIT IS UNACCEPTABLE FOR USE AS A COMMUNICATIONS CONDUIT EXCEPT AT SEISMIC JOINTS, AND AS APPROVED IN WRITING BY THE ENGINEER.
7. ALL UNDER SLAB OR IN-SLAB CONDUITS SHALL BE INSTALLED IN A MATTER THAT PREVENTS WATER INFILTRATION OF THE CONDUIT. IT IS THE CONTRACTOR'S RESPONSIBILITY TO ENSURE GROUND WATER, RAIN WATER OR CONSTRUCTION WATER IS PREVENTED FROM ENTERING AND/OR REMOVED FROM THE CONDUITS PRIOR TO PLACEMENT OF COMMUNICATIONS CABLES. SEE SITE UTILITY PLAN NOTES FOR ADDITIONAL UNDERGROUND COMMUNICATIONS CONDUIT SEALING REQUIREMENTS.
8. ALL PULLBOXES SHALL BE SIZED AND INSTALLED PER ANSI/TIA/EIA-569B. PULLBOXES FOR UNDER FLOOR CONDUIT RUNS ARE NOT PERMITTED UNLESS OTHERWISE NOTED. PULLBOXES FOR OVERHEAD CONDUIT RUNS SHALL BE LOCATED ABOVE ACCESSIBLE CEILINGS WITHIN THE ACCESSIBLE CEILING SPACE AND SUPPORTED INDEPENDENTLY FROM THE STRUCTURE AND CONDUIT SUPPORTS. PULLBOXES FOR ROOF MOUNTED OR EXTERIOR ABOVE GRADE APPLICATIONS SHALL BE NEMA 3 RATED. PULLBOXES SHALL BE SIZED ACCORDING TO THE FOLLOWING:

CONDUIT SIZE	WIDTH	LENGTH	DEPTH	WIDTH INCREASE PER ADDITIONAL CONDUIT
1" 2" 3" 4"	4" 8" 12" 15"	16" 36" 48" 60"	3" 4" 5" 8"	2" 5" 6" 8"

FOR OTHER CONDUIT SIZES REFER TO ANSI/TIA/EIA 569B TABLE 12. – LATEST PUBLISHED EDITION.

9. CONDUIT(S) SHALL EXIT A PULLBOX ON THE WALL OPPOSITE THE WALL ENTERED.
10. PROVIDE LABELING OF EACH CONDUIT PER GENERAL ELECTRICAL SPECIFICATIONS.
11. PROVIDE INTERNAL/EXTERNAL GAS AND WATER TIGHT MECHANICAL SEALING/PLUGGING OF EACH BUILDING ENTRY CONDUIT(S), AND IN EVERY IN-GROUND PULLBOX, VAULT AND MANHOLE, AS SPECIFIED ELSEWHERE IN THE DRAWINGS AND SPECIFICATIONS.

IDENTIFICATION STAMP
DIV. OF THE STATE ARCHITECT
APP: 02-118630 INC:
REVIEWED FOR
SS ☐ FLS ☐ ACS ☑
DATE: 04/13/2021

OFFICE OF THE STATE FIRE MARSHAL
APPROVED FIRE AND PANIC ONLY
Approval of this plan does not authorize or approve any omission or deviation from applicable regulations. Final approval is subject to field inspection. One set of approved plans shall be available on the project site at all times.
PERMIT NO.: 28-N-2332-CP
REVIEWED BY: LEO CATAYLO, OSFM
DATE: 4/1/2021

DGS GENERAL SERVICES
Department of General Services
State of California
Real Estate Services Division
Project Management & Development Branch
707 Third Street, Suite 4-105
West Sacramento, California 95605

NICHOLS MELBURG & ROSSETTO ARCHITECTS + ENGINEERS
300 Knollcrest Drive
Redding, CA. 96002
(530) 222-3300 (530) 222-3538 FAX
http://www.nmrdesign.com

Copyright © 2019
All ideas, designs, arrangements and plans indicated or represented by this drawing are owned by, and the property of, NICHOLS, MELBURG and ROSSETTO and were created, evolved and developed for use on, and in connection with, the specified project. None of such ideas, designs, arrangements or plans shall be used by, or disclosed to any person, firm or corporation for any purpose whatsoever without the written permission of NICHOLS, MELBURG and ROSSETTO.

LICENSE STAMPS

REGISTERED PROFESSIONAL ENGINEER RAYMOND W. SWEETEN No. E15610 12/31/2021 STATE OF CALIFORNIA
Date Signed: 3/25/2021

CONSULTANT
tk1sc COLLABORATIVE
11870 Pierce Street, Suite 160
Riverside, California 92505
951.299.4160 www.tk1sc.com
Project Leader - Jerry Leonhardt
Electrical Lead - Reid Cordry
tk1sc Job #:2019-0228A

DRAWING STATUS
CONSTRUCTION DOCUMENTS

ISSUE

No.	Date	Description
1	10/20/2020	INITIAL PLAN REVIEW
2	01/22/2021	AGENCY RESUBMITTAL
3	03/22/2021	AGENCY RESUBMITTAL

If drawing is not 30" x 42" it is a reduced print

PROJECT
RESIDENTIAL CENTER, UKIAH: REPLACEMENT OF EXISTING RESIDENTIAL CENTER
440 EAST HILL ROAD
WILLITS, CALIFORNIA 95490
MENDOCINO COUNTY
CALIFORNIA CONSERVATION CORP

Supervisor	Designed	Drawn
		Author

DSA Application No.
02-118630

SHEET TITLE
TELECOM PATHWAYS AND GROUNDING

DGS Project Number: 0000000000001826
NMR Project Number: 18-6456

Reference North: NORTH
Sheet Scale: 12" = 1'-0"
Sheet Number: E701

ISSUE DATE
July 9, 2021

Plot Date: 3/22/2021 9:00:20 AM
File Name: BIM 360://CCC Willits Residential Center/E_CCC Willits_COMMON_2019-0228A.rvt

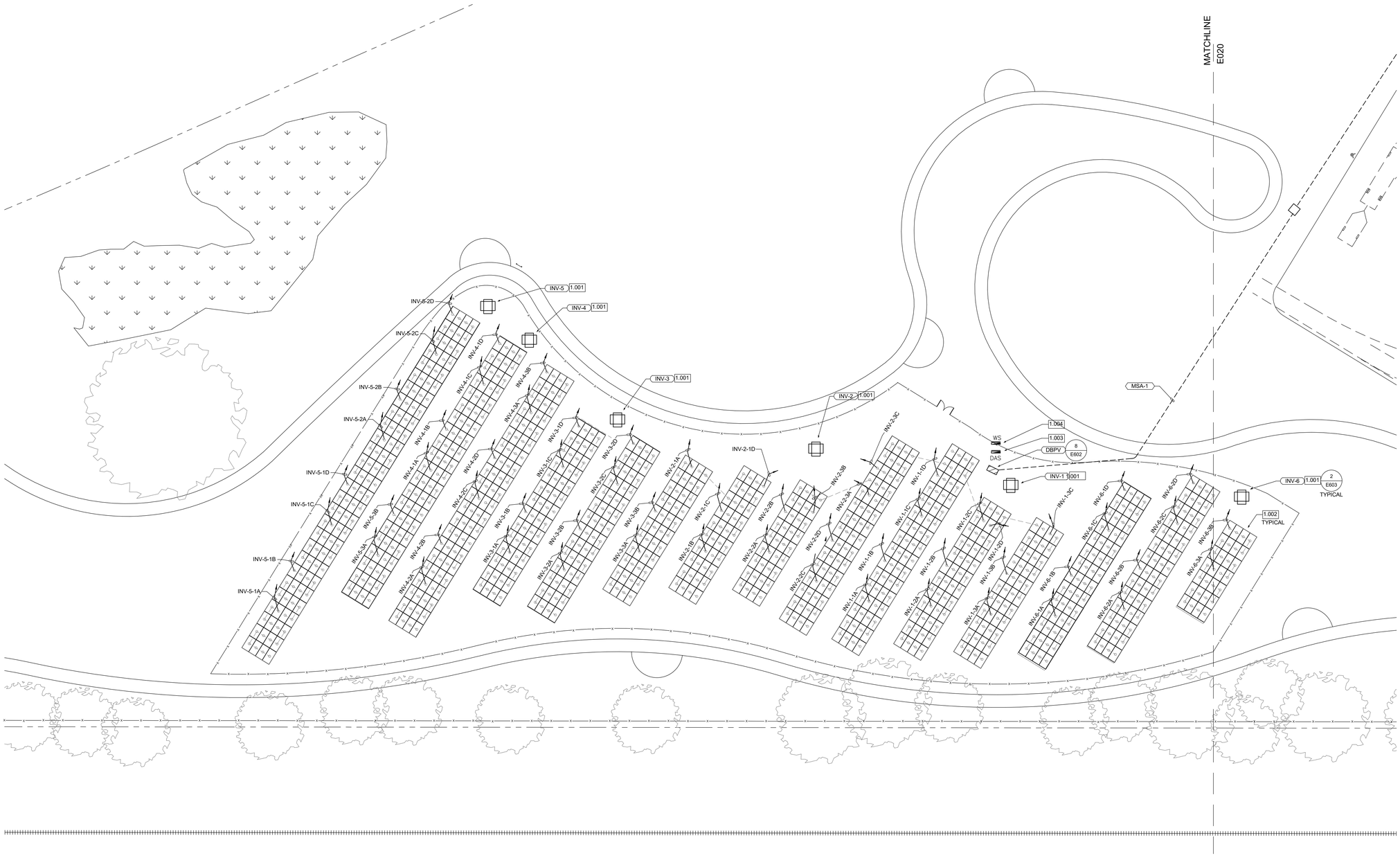

SITE PLAN GENERAL NOTES:

1. CONTRACTOR SHALL EXERCISE EXTREME CAUTION IN EXCAVATING AND TRENCHING ON THIS SITE TO AVOID EXISTING DUCTS, PIPING OR CONDUITS, ETC., AND TO PREVENT HAZARDS TO PERSONNEL AND/OR DAMAGE TO EXISTING UNDERGROUND UTILITIES OR STRUCTURES WHETHER OR NOT SHOWN AND INSTALLED BY ANY OTHER CONTRACTS. THE ENGINEER IS NOT RESPONSIBLE FOR THE LOCATION OF UNDERGROUND UTILITIES OR STRUCTURES WHETHER OR NOT SHOWN OR DETAILED AND INSTALLED BY ANY OTHER CONTRACTS. THE CONTRACTOR SHALL IMMEDIATELY NOTIFY THE ENGINEER SHOULD SUCH UNIDENTIFIED CONDITIONS BE DISCOVERED. THESE DRAWINGS AND SPECIFICATIONS DO NOT INCLUDE THE NECESSARY ELEMENTS FOR CONSTRUCTION SAFETY.
2. CALL UNDERGROUND SERVICE ALERT (USA) AT 1 (800) 422-4133 OR APPLICABLE STATE AND LOCAL DIG SAFE OR UNDERGROUND ALERT HOTLINES PRIOR TO CONSTRUCTION START.
3. MINIMUM CONDUIT SIZE SHALL BE 3/4" - U.O.N.
4. MINIMUM CONDUCTOR SIZE SHALL BE #10 AWG. - U.O.N.
5. ALL SITE BRANCH CIRCUITS SHALL INCLUDE AN EQUIPMENT GROUND CONDUCTOR THAT, AT MINIMUM, MATCHES THE SIZE OF THE ASSOCIATED BRANCH CIRCUIT CONDUCTOR. WHERE MULTIPLE BRANCH CIRCUITS ARE ROUTED/GROUPED TOGETHER, THE EQUIPMENT GROUNDING CONDUCTOR SHALL MATCH THE SIZE OF THE LARGEST BRANCH CIRCUIT CONDUCTOR IN THE GROUP.
6. ALL ELECTRICAL EQUIPMENT MOUNTED OUTDOORS SHALL BE WEATHERPROOF (NEMA #3R).
7. ALL CONDUIT ONLY SHALL BE PROVIDED WITH A NYLON PULL STRING.
8. SEE ARCHITECTURAL/LANDSCAPE ARCHITECTURAL PLANS FOR EXACT LOCATIONS OF FIXTURES, PULLBOXES, MANHOLES, OTHER ELECTRICAL DEVICES, ETC. COORDINATE ALL UNDERGROUND STRUCTURES AND CONDUIT ROUTING WITH LANDSCAPE ARCHITECT PRIOR TO ROUGH-IN TO ENSURE THAT SUCH ITEMS ARE NOT PLACED IN CRITICAL LANDSCAPE PLANTING/HARDSCAPE AREAS.
9. UNLESS SPECIFICALLY SHOWN AS (E), (R), (ER), (D), EXISTING OR NON-BOLD, ALL ELECTRICAL DEVICES SHOWN ARE NEW.
10. FOR CONDUIT BURIAL / TRENCHING REQUIREMENTS SEE DETAIL 8/E603.
11. A CLEAR, BRUSH FREE AREA OF 10' SHALL BE PROVIDED FOR ALL PV AREAS.

REFERENCE NORTH / TRUE NORTH

1 PHOTOVOLTAIC SITE PLAN

SCALE: 1" = 20'-0"

0' 10' 20' 40' 80'

SITE PLAN SPECIFIC NOTES:

1.001 PV INVERTER – SEE PHOTOVOLTAIC SYSTEM DIAGRAM FOR MORE INFORMATION. SEE MOUNTING DETAIL 2/E603.

1.002 PV MODULES / ARRAYS – SEE PHOTOVOLTAIC SYSTEM DIAGRAM FOR MORE INFORMATION. SEE SHEET E804 FOR MOUNTING REQUIREMENTS.

1.003 DATA AQUISITION SYSTEM (DAS) – SEE PHOTOVOLTAIC SYSTEM DIAGRAM FOR MORE INFORMATION.

1.004 WEATHER STATION SYSTEM – SEE PHOTOVOLTAIC SYSTEM DIAGRAM FOR MORE INFORMATION.

IDENTIFICATION STAMP
DIV. OF THE STATE ARCHITECT
APP: 02-118630 INC:
REVIEWED FOR
SS ☐ FLS ☐ ACS ☑
DATE: 04/13/2021

OFFICE OF THE STATE FIRE MARSHAL
APPROVED FIRE AND PANIC ONLY
Approval of this plan does not authorize or approve any omission or deviation from applicable regulations. Final approval is subject to field inspection. One set of approved plans shall be available on the project site at all times.
PERMIT NO: 20-N-2332-CP
REVIEWED BY: LEO CATAYLO, OSFM
DATE: 4/1/2021

DGS GENERAL SERVICES
Department of General Services
State of California
Real Estate Services Division
Project Management & Development Branch
707 Third Street, Suite 4-105
West Sacramento, California 95605

NICHOLS MELBURG & ROSSETTO ARCHITECTS + ENGINEERS
300 Knollcrest Drive
Redding, CA. 96002
(530) 222-3300 (530) 222-3538 FAX
http://www.nmrdesign.com

Copyright © 2019
All ideas, designs, arrangements and plans indicated or represented by this drawing are owned by, and the property of, NICHOLS, MELBURG and ROSSETTO and were created, evolved and developed for use on, and in connection with, the specified project. None of such ideas, designs, arrangements or plans shall be used by, or disclosed to, any person, firm or corporation for any purpose whatsoever without the written permission of NICHOLS, MELBURG and ROSSETTO.

LICENSE STAMPS

REGISTERED PROFESSIONAL ENGINEER
RAYMOND W. SINGER
No. E15610
EXP. 12/31/2021
ELECTRICAL
STATE OF CALIFORNIA
Date Signed
3/25/2021

CONSULTANT
tk1sc COLLABORATIVE
11870 Pierce Street, Suite 160
Riverside, California 92505
951.299.4160 www.tk1sc.com
Project Leader - Jerry Leonhardt
Electrical Lead - Reid Cordry
tk1sc Job #:2019-0228A

DRAWING STATUS
CONSTRUCTION DOCUMENTS

ISSUE

No.	Date	Description
1	10/20/2020	INITIAL PLAN REVIEW
2	01/22/2021	AGENCY RESUBMITTAL
3	03/22/2021	AGENCY RESUBMITTAL

If drawing is not 30" x 42" it is a reduced print

PROJECT
RESIDENTIAL CENTER, UKIAH: REPLACEMENT OF EXISTING RESIDENTIAL CENTER
440 EAST HILL ROAD
WILLITS, CALIFORNIA 95490
MENDOCINO COUNTY
CALIFORNIA CONSERVATION CORP

Supervisor	Designed	Drawn
		Author

DSA Application No.
02-118630

SHEET TITLE
PV SITE PLAN

DGS Project Number: 0000000000001826
NMR Project Number: 18-6456

Reference North: NORTH
Sheet Scale:
Sheet Number: E801

ISSUE DATE
July 9, 2021

Plot Date: 3/22/2021 12:14:25 PM
File Name: BIM 360:/CCC Willits Residential Center/E_CCC Willits_COMMON_2019-0228A.rvt

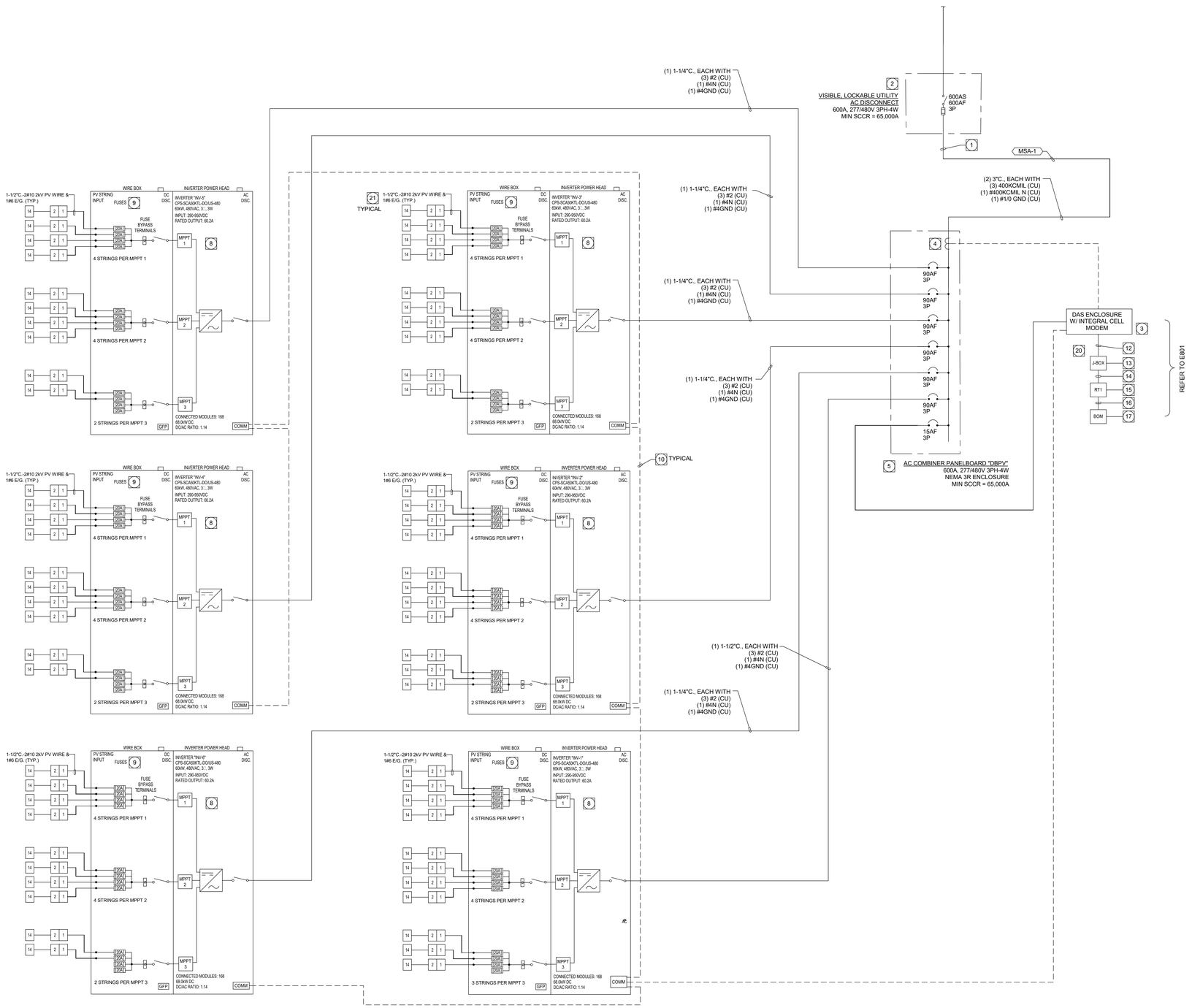

PLAN NOTES

1. INTERCONNECT PV ARRAY WITH A LINE SIDE TAP. COORDINATE WITH UTILITY FOR EXACT REQUIREMENTS. INTERCONNECTION TO COMPLY WITH NEC 705.12(A).
2. PROVIDE A FUSIBLE AC, MANUAL VISIBLE-BLADE, BOLTED PRESSURE SWITCH AS PART OF MSA. THE SWITCH SHALL BE CAPABLE OF BEING LOCKED IN THE OPEN POSITION AND COMPLY WITH ALL UTILITY REQUIREMENTS. FUSES SHALL BE BUSSMAN LPS-RK OR EQUAL. SEE SINGLE LINE DIAGRAM, SHEET E401, FOR ADDITIONAL INFORMATION.
3. DATA ACQUISITION SYSTEM (DAS) ENCLOSURE. CONTRACTOR PROVIDED, CONTRACTOR INSTALLED. INSTALL ADJACENT PV POINT OF INTERCONNECTION.
4. REVENUE GRADE CTS FOR DAS SYSTEM. CONTRACTOR PROVIDED, CONTRACTOR INSTALLED. ROUTE CT CONDUCTORS TO DAS SYSTEM ENCLOSURE AND TERMINATE PER DAS MANUFACTURER'S REQUIREMENTS. CT WIRES ARE NOT TO BE EXTENDED. DAS TO BE LOCATED RELATIVE TO AC DISCONNECT TO FACILITATE.
5. FUSIBLE NEMA3R AC COMBINER PANELBOARD AS MANUFACTURED BY SQUARE D, EATON, OR EQUAL.
6. NOT USED.
7. NOT USED.
8. THE UL1741SA LISTED SOLAR INVERTER IS TRANSFORMERLESS AND INCLUDES INTEGRAL GROUND FAULT AND ARC FAULT PROTECTION PROVIDING SYSTEM COMPLIANCE TO NEC 690.11 AND 705.32
9. FUSE SHOWN IS SYMBOLIC OF THE FUSES FOR EACH STRING. BOTH THE POSITIVE AND NEGATIVE CONDUCTORS ARE UNGROUNDED AND SHALL BE PROVIDED WITH OVERCURRENT PROTECTION.
10. PROVIDE RS-485 BELDEN 3106a CABLE IN 3/4" CONDUIT FOR DATA CIRCUIT TO INVERTERS. LAND ALL 3 WIRES AND CONNECT THE SHIELD AND DRAIN WIRES TOGETHER AND GROUNDING AT DAS BOX ONLY. KEEPING SHIELD ISOLATED FROM GROUND ALONG THE DAISY CHAIN.
11. NOT USED.
12. PROVIDE 3/4" CONDUIT WITH TWO(2) BELDEN 3160a CABLE AND ONE(1) BELDEN 1120A CABLE FOR DATA AND 24V POWER CONNECTIONS TO THE REFERENCE CELL JUNCTION BOX. TERMINATE CABLES IN DAS CABINET PER MANUFACTURER'S INSTRUCTIONS.
13. PROVIDE WEATHERPROOF JUNCTION BOX. TERMINATE DATA AND 24V POWER CABLES AS NEEDED PER MANUFACTURER.
14. SENSOR FACTORY CABLE FREE AIR TO CORD GRIP AT RT1 TERMINATION BOX AS NEEDED. ALL EXPOSED FACTORY CABLE TO AND FROM DEVICE MUST HAVE ADDITIONAL UV PROTECTION.
15. RT1 PYROMETER. TERMINATE BOM SENSOR CABLE AT RT1 PYROMETER.
16. BACK OF MODULES SENSOR CABLE IN FREE AIR.
17. BACK OF MODULE TEMPERATURE SENSOR.
18. NOT USED.
19. NOT USED.
20. PROVIDE 3/4" CONDUIT WITH RS-485 3106a CABLING FROM DAS ENCLOSURE TO "INV-1". PROVIDE CABLING WITH SHIELDED, STRANDED CONDUCTORS.
21. PROVIDE 3' SERVICE LOOP TO FACILITATE CLAMP METER ACCESS DURING COMMISSIONING. TYPICAL FOR ALL STRINGS.

GENERAL NOTES

A. THE ENTIRE ELECTRICAL SERVICE AND DISTRIBUTION EQUIPMENT, INCLUDING ALL OVERCURRENT PROTECTIVE (OCP), SHALL BE UL LISTED AS A FULLY RATED SYSTEM. THE MANUFACTURER SHALL PROVIDE THE EQUIPMENT SHORT CIRCUIT CURRENT RATINGS EQUAL TO OR GREATER THAN THE AVAILABLE SHORT CIRCUIT CURRENT.

B. ALL EQUIPMENT, GROUND FAULT, OVERCURRENT DEVICES, CABLES, ETC. THAT ARE REQUIRED TO BE INSPECTED AND TESTED SHALL BE PERFORMED PRIOR TO ENERGIZING.

C. PROVIDE LABELS ON EQUIPMENT PER NEC 690 AND SHEET PV402

D. UNLESS NOTED OTHERWISE, ALL INVERTERS SHALL OPERATE IN INDEPENDENT MODE.

E. ALL EXTERIOR CONDUIT SHALL BE EMT UNLESS EXPOSED TO PHYSICAL DAMAGE WHERE RMC SHALL BE USED. REFER TO SHEET G201 AND G203 FOR ADDITIONAL INFORMATION REGARDING CONDUIT SPECIFICATIONS AND INSTALLATION REQUIREMENTS.

F. COMM CABLE MINIMUM SEPARATION WITH AC POWER CABLES: 12" FOR PVC CONDUITS, 6" FOR METALLIC CONDUITS.

G. ALUMINUM CONDUCTORS WITH COPPER NEUTRAL AND COPPER GROUNDING CONDUCTORS (IF SMALLER THAN 2AWG). THE AC RUN TO THE POC SHALL BE COPPER.

H. ALL PV BREAKERS SHALL BE RATED FOR BACKFEED.

IDENTIFICATION STAMP
DIV. OF THE STATE ARCHITECT
APP: 02-118630 INC:
REVIEWED FOR
SS ☐ FLS ☐ ACS ☑
DATE: 04/13/2021

OFFICE OF THE STATE FIRE MARSHAL
APPROVED FIRE AND PANIC ONLY
Approval of this plan does not authorize or approve any omission or deviation from applicable regulations. Final approval is subject to field inspection. One set of approved plans shall be available on the project site at all times.
PERMIT NO: 28 N 2332 CP
REVIEWED BY: LEO CATAYLO, OSFM
DATE: 4/ /2021

GENERAL SERVICES
Department of General Services
State of California
Real Estate Services Division
Project Management & Development Branch
707 Third Street, Suite 4-105
West Sacramento, California 95605

NICHOLS MELBURG & ROSSETTO ARCHITECTS + ENGINEERS
300 Knollcrest Drive
Redding, CA. 96002
(530) 222-3300 (530) 222-3538 FAX
http://www.nmrdesign.com

Copyright © 2019
All ideas, designs, arrangements and plans indicated or represented by this drawing are owned by, and the property of, NICHOLS, MELBURG and ROSSETTO and were created, evolved and developed for use on, and in connection with, the specified project. None of such ideas, designs, arrangements or plans shall be used by, or disclosed to any person, firm or corporation for any purpose whatsoever without the written permission of NICHOLS, MELBURG and ROSSETTO.

LICENSE STAMPS

REGISTERED PROFESSIONAL ENGINEER RAYMOND W. SWIFT No. E15610 ELECTRICAL STATE OF CALIFORNIA
Date Signed: 3/25/2021

CONSULTANT
tk1sc COLLABORATIVE
11870 Pierce Street, Suite 160
Riverside, California 92505
951.299.4160 www.tk1sc.com
Project Leader - Jerry Leonhardt
Electrical Lead - Reid Cordry
tk1sc Job #:2019-0228A

DRAWING STATUS
CONSTRUCTION DOCUMENTS

ISSUE

No.	Date	Description
1	10/20/2020	INITIAL PLAN REVIEW
2	01/22/2021	AGENCY RESUBMITTAL
3	03/22/2021	AGENCY RESUBMITTAL

If drawing is not 30" x 42" it is a reduced print

PROJECT
RESIDENTIAL CENTER, UKIAH: REPLACEMENT OF EXISTING RESIDENTIAL CENTER
440 EAST HILL ROAD
WILLITS, CALIFORNIA 95490
MENDOCINO COUNTY
CALIFORNIA CONSERVATION CORP

Supervisor	Designed	Drawn
		Author

DSA Application No.
02-118630

SHEET TITLE
PV SINGLE LINE DIAGRAM

DGS Project Number: 000000000001826
NMR Project Number: 18-6456

Reference North: NORTH
Sheet Scale:
Sheet Number: E802

ISSUE DATE
July 9, 2021

Plot Date: 3/22/2021 9:00:23 AM
File Name: BIM 360://CCC Willits Residential Center/E_CCC Willits_COMMON_2019-0228A.rvt

LG NeON® 2

LG405N2W-V5

72

405W

(Make-To-Order Product)

The LG NeON® 2 is LG's best selling solar module, and is one of the most powerful and versatile modules on the market today. Featuring LG's Cello Technology, the LG NeON® 2 increases power output. New updates include an extended performance warranty from 86% to 89.6% to give customers higher performance and reliability.

In progress

Made in USA From Imported Parts

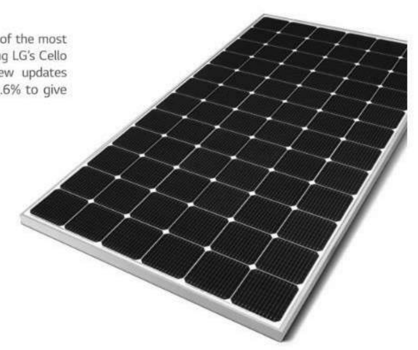

Features

Enhanced Performance Warranty
LG NeON® 2 has an enhanced performance warranty. After 25 years, LG NeON® 2 is guaranteed to perform at minimum 89.6% of initial performance.

Enhanced Product Warranty
LG has extended the warranty of the NeON® 2 to 25 years, which is among the top of industry standards.

Better Performance on a Sunny Day
LG NeON® 2 now performs better on sunny days, thanks to its improved temperature coefficient.

BOS (Balance Of System) Saving
LG NeON® 2 can reduce the total number of strings due to its high module efficiency resulting in a more cost effective and efficient solar power system.

About LG Electronics
LG Electronics is a global leader in electronic products in the clean energy markets by offering solar PV panels and energy storage systems. The company first embarked on a solar energy source research program in 1985, supported by LG Group's vast experience in the semi-conductor, LCD, chemistry and materials industries. In 2010, LG Solar successfully released its first MonoX® series to the market, which is now available in 32 countries. The NeON® (previous. MonoX® NeON), NeON®2, NeON®2 BiFacial won the "Intersolar AWARD" in 2013, 2015 and 2016, which demonstrates LG's leadership and innovation in the solar industry.

LG

LG NeON® 2

Made in USA From Imported Parts

LG405N2W-V5

General Data

Cell Properties (Material/Type)	Monocrystalline / N-type
Cell Maker	LG
Cell Configuration	72 Cells (6 x 12)
Number of Busbars	12EA
Module Dimensions (L x W x H)	2,024mm x 1,024mm x 40 mm
Weight	20.3 kg
Glass (Material)	Tempered Glass with AR Coating
Backsheet (Color)	White
Frame (Material)	Anodized Aluminium
Junction Box (Protection Degree)	IP 68
Cables (Length)	1,200 mm x 2EA
Connector (Type / Maker)	MC 4 / MC

Certifications and Warranty

Certifications	IEC 61215-1/-1-1/2:2016, IEC 61730-1/2:2016, UL 1703 ISO 9001, ISO 14001, ISO 50001 OHSAS 18001, PV CYCLE
Salt Mist Corrosion Test	IEC 61701 : 2012 Severity 6
Ammonia Corrosion Test	IEC 62716 : 2013
Module Fire Performance	Type 1 (UL 1703)
Fire Rating	Class C (UL 790, ULC/ORD C 1703)
Solar Module Product Warranty	25 Years
Solar Module Output Warranty	Linear Warranty*

* 1) First year : 98% 2) After 1st year : 0.35% annual degradation 3) 89.6% for 25 years

Temperature Characteristics

NMOT*	[°C]	42 ± 3
Pmax	[%/°C]	-0.36
Voc	[%/°C]	-0.26
Isc	[%/°C]	0.02

* NMOT (Nominal Module Operating Temperature): Irradiance 800 W/m², Ambient temperature 20 °C, Wind speed 1 m/s, Spectrum AM 1.5

Electrical Properties (NMOT)

Model		LG405N2W-V5
Maximum Power (Pmax)	[W]	304
MPP Voltage (Vmpp)	[V]	38.4
MPP Current (Impp)	[A]	7.91
Open Circuit Voltage (Voc)	[V]	46.6
Short Circuit Current (Isc)	[A]	8.44

I-V Curves

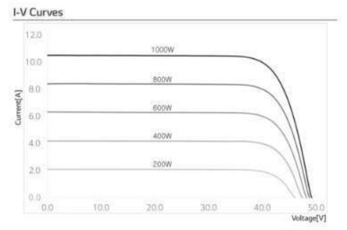

Electrical Properties (STC*)

Model		LG405N2W-V5
Maximum Power (Pmax)	[W]	405
MPP Voltage (Vmpp)	[V]	41.0
MPP Current (Impp)	[A]	9.89
Open Circuit Voltage (Voc, ±5%)	[V]	49.4
Short Circuit Current (Isc, ±5%)	[A]	10.51
Module Efficiency	[%]	19.5
Power Tolerance	[%]	0 ~ +3

* STC (Standard Test Condition): Irradiance 1000 W/m², Cell temperature 25 °C, AM 1.5

Operating Conditions

Operating Temperature	[°C]	-40 ~ +90
Maximum System Voltage	[V]	1,500(UL), 1000(IEC)
Maximum Series Fuse Rating	[A]	20
Mechanical Test Load (Front)	[Pa / psf]	5,400 / 113
Mechanical Test Load (Rear)	[Pa / psf]	3,000 / 63

* Test Load = Design load X Safety Factor (1.5)

Packaging Configuration

Number of Modules per Pallet	[EA]	25
Number of Modules per 40ft HQ Container	[EA]	550
Packaging Box Dimensions (L x W x H)	[mm]	2,080 x 1,120 x 1,226
Packaging Box Gross Weight	[kg]	551

Dimensions (mm / inch)

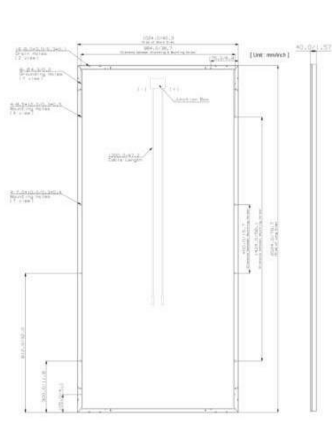

LG Life's Good

LG Electronics Inc.
Solar Business Division
2000 Millbrook Drive
Lincolnshire, IL 60069
www.lg-solar.com

Product specifications are subject to change without notice.
LG405N2W-V5_US_Ver01

© 2019 LG Electronics. All rights reserved.

CPS

Datasheet

50/60kW, 1000Vdc String Inverters for North America

The 50 & 60kW (55 & 66kVA) medium power CPS three phase string inverters are designed for ground mount, large rooftop and carport applications. The units are high performance, advanced and reliable inverters designed specifically for the North American environment and grid. High efficiency at 98.8% peak and 98.5% CEC, wide operating voltages, broad temperature ranges and a NEMA Type 4X enclosure enable this inverter platform to operate at high performance across many applications. The CPS 50/60kW products ship with either the Standard wire-box or the Rapid Shutdown wire-box, each fully integrated and separable with touch safe fusing, monitoring, and AC and DC disconnect switches. The integrated PLC transmitter in the Rapid Shutdown version enables PVRSS certified module-level rapid shutdown when used with the Tigo TS4-F/TS4-R-F products. Both models are also PVRSS certified with the -O and -L models. The CPS Flex Gateway enables monitoring, controls and remote product upgrades.

Key Features

- NEC 2017 PVRSS Certified Rapid Shutdown
- 55 & 66kVA rating allows max rated Active Power @±0.91PF
- Selectable Max AC Apparent Power of 50/55kVA and 60/66kVA
- NEC 2014/17 compliant & UL listed Arc-Fault circuit protection
- 0-90° Mounting orientation for lay flat roof installs
- Optional Flex Gateway enables remote FW upgrades
- Integrated AC & DC disconnect switches
- 3 MPPT's with 5 inputs each for maximum flexibility
- Copper and Aluminum compatible AC connections
- NEMA Type 4X outdoor rated, tough tested enclosure
- UL1741 SA Certified to CA Rule 21, including SA14 FW and SA15 VW
- Separable wire-box design for fast service
- Standard 10 year warranty with extensions to 20 years
- Generous 1.5 DC/AC Inverter Load Ratio

CPS SCA50KTL-DO/US-480
CPS SCA60KTL-DO/US-480

50/60kW Standard Wire-box

50/60kW Rapid Shutdown Wire-box

This device complies with part 15 of the FCC Rules

© CHINT POWER SYSTEMS AMERICA 2019/04-MKT NA

Chint Power Systems America
7060 Koll Center Parkway, Suite 318 Pleasanton, CA 94566
Tel: 855-584-7168 Mail: AmericaSales@chintpower.com Web: www.chintpowersystems.com

CPS

Technical Data

Model Name	CPS SCA50KTL-DO/US-480	CPS SCA60KTL-DO/US-480
DC Input		
Max. PV Power	75kW (30kW per MPPT)	90kW (33kW per MPPT)
Max. DC Input Voltage	1000Vdc	
Operating DC Input Voltage Range	200-950Vdc	
Start-up DC Input Voltage / Power	330V / 80W	
Number of MPP Trackers	3	
MPPT Voltage Range @ PF>0.99[1]	480-850Vdc	540-850Vdc
Max. PV Short-Circuit Current (Isc x 1.25)	204A (68A per MPPT)	
Number of DC Inputs	15 inputs, 5 per MPPT	
DC Disconnection Type	Load rated DC switch	
DC Surge Protection	Type II MOV, 2800V_C, 20kA I_{TM} (8/20μS)	
AC Output		
Rated AC Output Power @ PF>0.99 to ±0.91[2]	50kW	60kW
Max. AC Apparent Power (Selectable)	50/55kVA	60/66kVA
Rated Output Voltage	480Vac	
Output Voltage Range[3]	422 - 528Vac	
Grid Connection Type	3Φ / PE / N (Neutral optional)	
Max. AC Output Current @480Vac	60.2/66.2A	72.2/79.4A
Rated Output Frequency	60Hz	
Output Frequency Range[3]	57 - 63Hz	
Power Factor	>0.99 (±0.8 adjustable)	
Current THD @ Rated Load	<3%	
Max. Fault Current Contribution (1 Cycle RMS)	64.1A	
Max. OCPD Rating	110A	125A
AC Disconnection Type	Load rated AC switch	
AC Surge Protection	Type II MOV, 1240V_C, 15kA I_{TM} (8/20μS)	
System and Performance		
Topology	Transformerless	
Max. Efficiency	98.8%	
CEC Efficiency	98.5%	
Stand-by / Night Consumption	<1W	
Environment		
Enclosure Protection Degree	NEMA Type 4X	
Cooling Method	Variable speed cooling fans	
Operating Temperature Range[4]	-22°F to +140°F / - 30°C to +60°C[4]	
Non-Operating Temperature Range[5]	No low temp minimum to +158°F / +70°C maximum[5]	
Operating Humidity	0 to 100%	
Operating Altitude	13,123.4ft / 4000m (derating from 9842.5ft / 3000m)	
Audible Noise	<60dBA @ 1m and 25°C	
Display and Communication		
User Interface and Display	LCD+LED	
Inverter Monitoring	SunSpec, Modbus RS485	
Site Level Monitoring	CPS Flex Gateway (1 per 70 inverters)	
Modbus Data Mapping	CPS	
Remote Diagnostics / FW Upgrade Functions	Standard / (with Flex Gateway)	
Mechanical		
Dimensions (HxWxD)	39.4 x 23.6 x 10.24in. (1000 x 600 x 260mm)	
Weight	Inverter: 123.5lbs/56kg; Wire-box: 33lbs/15kg	
Mounting / Installation Angle[6]	0 to 90 degrees from horizontal (vertical, angled, or lay flat)[6]	
AC Termination	M8 Stud Type Terminal Block (Wire range: #6 - 3/0AWG CU/AL, Lugs not supplied)	
DC Termination[7]	Screw Clamp, Neg. Busbar (RSD version[7]) Wire range: #14 - #6AWG CU	
Fused String Inputs (5 per MPPT)[8]	15A fuses provided (Fuse values up to 30A acceptable)[8]	
Safety		
Certifications and Standards	UL1741SA-2016, UL1699B, CSA-C22.2 NO.107.1-01, IEEE1547a-2014; FCC PART15	
Selectable Grid Standard and SRD	IEEE1547a-2014, CA Rule 21	
Smart-Grid Features	Volt-RideThru, Freq-RideThru, Ramp-Rate, Specified-PF, Volt-VAr, Freq-Watt, Volt-Watt	
Warranty		
Standard	10 years	
Extended Terms	15 and 20 years	

1) See user manual for further information regarding MPPT Voltage Range when operating at non-unity PF.
2) Active Power Derating begins; at PF=±0.91 to ±0.8 when Max AC Apparent Power is set to 55 or 66kVA.
3) The "Output Voltage Range" and "Output Frequency Range" may differ according to the specific grid standard.
4) Active Power Derating begins; at 40°C when PF=±0.9 and MPPT ≥Vmin, at 45°C when PF=1 and MPPT ≥Vmin, and at 50°C when PF=1 and MPPT V ≥ 700Vdc.
5) See user manual for further requirements regarding non-operating conditions.
6) Shade Cover accessory required for installation angles of 75 degrees or less.
7) RSD wire-box only includes fuses/fuseholders on the positive polarity, compliant with NEC 2017, 690.9 (C).
8) Fuse values above 20A have additional spacing requirements or require the use of the Y-Comb Terminal Block. See user manual for details.

IDENTIFICATION STAMP
DIV. OF THE STATE ARCHITECT
APP: 02-118630 INC:
REVIEWED FOR
SS ☐ FLS ☐ ACS ☑
DATE: 04/13/2021

OFFICE OF THE STATE FIRE MARSHAL
APPROVED FIRE AND PANIC ONLY
Approval of this plan does not authorize or approve any omission or deviation from applicable regulations. Final approval is subject to field inspection. One set of approved plans shall be available on the project site at all times.
PERMIT NO.: 20-N-2332-CP
REVIEWED BY: LITO CATAYLO, OSFM
DATE: 3/ 1 /2021

GENERAL SERVICES
Department of General Services
State of California
Real Estate Services Division
Project Management & Development Branch
707 Third Street, Suite 4-105
West Sacramento, California 95605

NICHOLS MELBURG & ROSSETTO
ARCHITECTS + ENGINEERS
300 Knollcrest Drive
Redding, CA. 96002
(530) 222-3300 (530) 222-3538 FAX
http://www.nmrdesign.com

Copyright © 2019
All ideas, designs, arrangements and plans indicated or represented by this drawing are owned by, and the property of, NICHOLS, MELBURG and ROSSETTO and were created, evolved and developed for use on, and in conjunction with, the specified project. None of such ideas, designs, arrangements or plans shall be used by, or disclosed to any person, firm or corporation for any purpose whatsoever without the written permission of NICHOLS, MELBURG and ROSSETTO.

LICENSE STAMPS

REGISTERED PROFESSIONAL ENGINEER
RAYMOND W. SWARTZ
No. E15610
Ex. 12/31/2021
ELECTRICAL
STATE OF CALIFORNIA
Date Signed: 3/25/2021

CONSULTANT
tk1sc COLLABORATIVE
11870 Pierce Street, Suite 160
Riverside, California 92505
951.299.4160 www.tk1sc.com
Project Leader - Jerry Leonhardt
Electrical Lead - Reid Cordry
tk1sc Job #:2019-0228A

DRAWING STATUS
CONSTRUCTION DOCUMENTS

ISSUE

No.	Date	Description
1	10/20/2020	INITIAL PLAN REVIEW
2	01/22/2021	AGENCY RESUBMITTAL
3	03/22/2021	AGENCY RESUBMITTAL

If drawing is not 30" x 42" it is a reduced print

PROJECT
RESIDENTIAL CENTER, UKIAH: REPLACEMENT OF EXISTING RESIDENTIAL CENTER
440 EAST HILL ROAD
WILLITS, CALIFORNIA 95490
MENDOCINO COUNTY
CALIFORNIA CONSERVATION CORP

Supervisor | Designed | Drawn: Author

DSA Application No.
02-118630

SHEET TITLE
PV EQUIPMENT

DGS Project Number: 000000000001826
NMR Project Number: 18-6456

Reference North: NORTH
Sheet Scale
Sheet Number: E803

ISSUE DATE
July 9, 2021

Plot Date: 3/22/2021 9:00:25 AM
File Name: BIM 360://CCC Willits Residential Center/E_CCC Willits_COMMON_2019-0228A.rvt

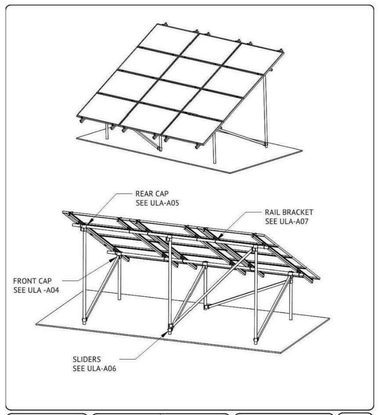

UNIRAC	
1411 BROADWAY BLVD NE ALBUQUERQUE, NM 87102 USA	
WWW.UNIRAC.COM	
PRODUCT LINE:	ULA
DRAWING TYPE:	PART
DESCRIPTION:	ASSEMBLY EXAMPLE
REVISION DATE:	AUGUST 2015
DRAWING NOT TO SCALE ALL DIMENSIONS ARE NOMINAL	
PRODUCT PROTECTED BY ONE OR MORE US PATENTS	
LEGAL NOTICE	
SHEET	ULA-A01

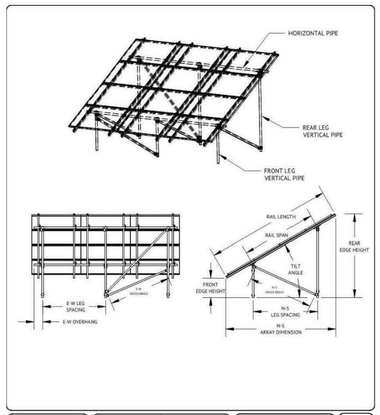

UNIRAC	
1411 BROADWAY BLVD NE ALBUQUERQUE, NM 87102 USA	
WWW.UNIRAC.COM	
PRODUCT LINE:	ULA
DRAWING TYPE:	ASSEMBLY
DESCRIPTION:	ASSEMBLY EXAMPLE
REVISION DATE:	AUGUST 2015
DRAWING NOT TO SCALE ALL DIMENSIONS ARE NOMINAL	
PRODUCT PROTECTED BY ONE OR MORE US PATENTS	
LEGAL NOTICE	
SHEET	ULA-A02

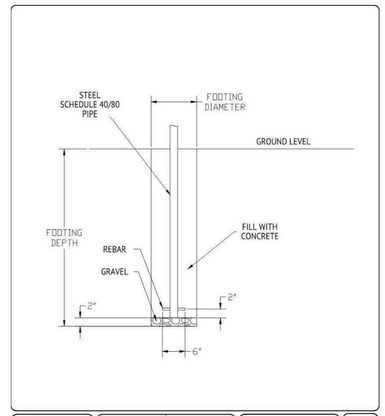

UNIRAC	
1411 BROADWAY BLVD NE ALBUQUERQUE, NM 87102 USA	
WWW.UNIRAC.COM	
PRODUCT LINE:	ULA
DRAWING TYPE:	ASSEMBLY
DESCRIPTION:	ULA FOUNDATION
REVISION DATE:	AUGUST 2015
DRAWING NOT TO SCALE ALL DIMENSIONS ARE NOMINAL	
PRODUCT PROTECTED BY ONE OR MORE US PATENTS	
LEGAL NOTICE	
SHEET	ULA-A03

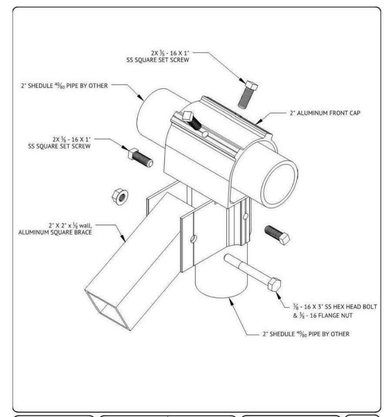

UNIRAC	
1411 BROADWAY BLVD NE ALBUQUERQUE, NM 87102 USA	
WWW.UNIRAC.COM	
PRODUCT LINE:	ULA
DRAWING TYPE:	PART
DESCRIPTION:	ALUM FRONT CAP
REVISION DATE:	AUGUST 2015
DRAWING NOT TO SCALE ALL DIMENSIONS ARE NOMINAL	
PRODUCT PROTECTED BY ONE OR MORE US PATENTS	
LEGAL NOTICE	
SHEET	ULA-A04

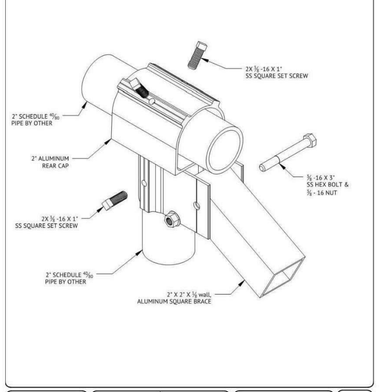

UNIRAC	
1411 BROADWAY BLVD NE ALBUQUERQUE, NM 87102 USA	
WWW.UNIRAC.COM	
PRODUCT LINE:	ULA
DRAWING TYPE:	PART
DESCRIPTION:	ALUMINUM REAR CAP
REVISION DATE:	AUGUST 2015
DRAWING NOT TO SCALE ALL DIMENSIONS ARE NOMINAL	
PRODUCT PROTECTED BY ONE OR MORE US PATENTS	
LEGAL NOTICE	
SHEET	ULA-A05

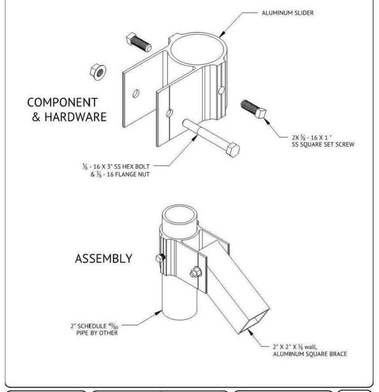

UNIRAC	
1411 BROADWAY BLVD NE ALBUQUERQUE, NM 87102 USA	
WWW.UNIRAC.COM	
PRODUCT LINE:	ULA
DRAWING TYPE:	PART
DESCRIPTION:	ALUM SLIDER
REVISION DATE:	SEPTEMBER 2015
DRAWING NOT TO SCALE ALL DIMENSIONS ARE NOMINAL	
PRODUCT PROTECTED BY ONE OR MORE US PATENTS	
LEGAL NOTICE	
SHEET	ULA-A06

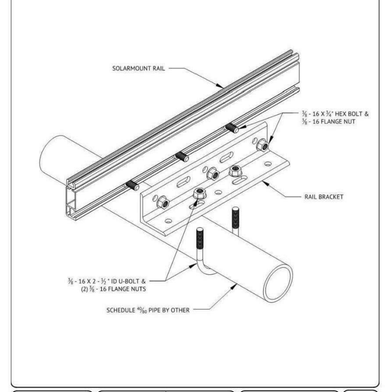

UNIRAC	
1411 BROADWAY BLVD NE ALBUQUERQUE, NM 87102 USA	
WWW.UNIRAC.COM	
PRODUCT LINE:	ULA
DRAWING TYPE:	PART
DESCRIPTION:	UNIVERSAL RAIL BRACKET
REVISION DATE:	SEPTEMBER 2015
DRAWING NOT TO SCALE ALL DIMENSIONS ARE NOMINAL	
PRODUCT PROTECTED BY ONE OR MORE US PATENTS	
LEGAL NOTICE	
SHEET	ULA-A07

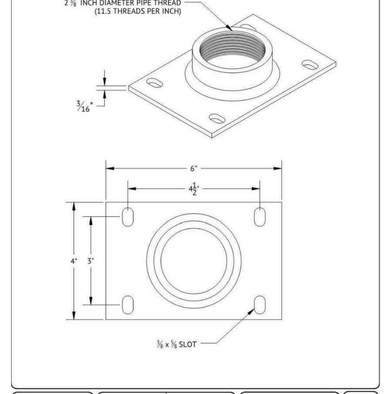

UNIRAC	
1411 BROADWAY BLVD NE ALBUQUERQUE, NM 87102 USA	
WWW.UNIRAC.COM	
PRODUCT LINE:	ULA
DRAWING TYPE:	PART
DESCRIPTION:	STEEL THREADED FOOT
REVISION DATE:	SEPTEMBER 2015
DRAWING NOT TO SCALE ALL DIMENSIONS ARE NOMINAL	
PRODUCT PROTECTED BY ONE OR MORE US PATENTS	
LEGAL NOTICE	
SHEET	ULA-P01

IDENTIFICATION STAMP
DIV. OF THE STATE ARCHITECT
APP: 02-118630 INC:
REVIEWED FOR
SS ☐ FLS ☐ ACS ☑
DATE: 04/13/2021

OFFICE OF THE STATE FIRE MARSHAL
APPROVED FIRE AND PANIC ONLY
Approval of this plan does not authorize or approve any omission or deviation from applicable regulations. Final approval is subject to field inspection. One set of approved plans shall be available on the project site at all times.
PERMIT NO.: 20 N 2332-CP
REVIEWED BY: LEO CATAYLO, OSFM
DATE: 4/1/2021

DGS GENERAL SERVICES
Department of General Services
State of California
Real Estate Services Division
Project Management & Development Branch
707 Third Street, Suite 4-105
West Sacramento, California 95605

NICHOLS MELBURG & ROSSETTO ARCHITECTS + ENGINEERS
300 Knollcrest Drive
Redding, CA. 96002
(530) 222-3300 (530) 222-3538 FAX
http://www.nmrdesign.com

Copyright © 2019
All ideas, designs, arrangements and plans indicated or represented by this drawing are owned by, and the property of, NICHOLS, MELBURG and ROSSETTO and were created, evolved and developed for use on, and in connection with, the specified project. None of such ideas, designs, arrangements or plans shall be used by, or disclosed to any person, firm or corporation for any purpose whatsoever without the written permission of NICHOLS, MELBURG and ROSSETTO.

LICENSE STAMPS
REGISTERED PROFESSIONAL ENGINEER RAYMOND W. SWEET No. E15610 12/31/2021 MECHANICAL STATE OF CALIFORNIA
Date Signed 3/25/2021

CONSULTANT
tklsc COLLABORATIVE
11870 Pierce Street, Suite 160
Riverside, California 92505
951.299.4160 www.tk1sc.com
Project Leader - Jerry Leonhardt
Electrical Lead - Reid Cordry
tk1sc Job #:2019-0228A

DRAWING STATUS
CONSTRUCTION DOCUMENTS

ISSUE

No.	Date	Description
1	10/20/2020	INITIAL PLAN REVIEW
2	01/22/2021	AGENCY RESUBMITTAL
3	03/22/2021	AGENCY RESUBMITTAL

If drawing is not 30" x 42" it is a reduced print

PROJECT
RESIDENTIAL CENTER, UKIAH: REPLACEMENT OF EXISTING RESIDENTIAL CENTER
440 EAST HILL ROAD
WILLITS, CALIFORNIA 95490
MENDOCINO COUNTY
CALIFORNIA CONSERVATION CORP

Supervisor	Designed	Drawn
		Author

DSA Application No.
02-118630

SHEET TITLE
PV EQUIPMENT

DGS Project Number: 0000000000001826
NMR Project Number: 18-6456

Reference North: NORTH
Sheet Scale:
Sheet Number: E804

ISSUE DATE
July 9, 2021

Plot Date: 3/22/2021 9:00:27 AM
File Name: BIM 360:/CCC Willits Residential Center/E_CCC Willits_COMMON_2019-0228A.rvt

PHOTOVOLTAIC SYSTEM CALCULATIONS - ARRAY #1

PROJECT INFORMATION	
Project Name	CCC Willits
tk1sc Project #	2019-0228A

PV ARRAY INFORMATION		
Module Wattage (STC)	405	Input STC Wattage data from PV Module manufacturer data sheet.
Number of Modules	728	Input total quanity of modules in the system.
Array Wattage (STC)	294,840	(Module Wattage X Number of Modules)
Module V-OC	49.3	Input data from PV Module manufacturer data sheet.
Module V-MP	41	Input data from PV Module manufacturer data sheet.
Module I-MP	9.86	Input data from PV Module manufacturer data sheet.
Module I-SC	10.47	Input data from PV Module manufacturer data sheet.
Maximum V-OC of Inverter	850	(Data from inverter cut sheet summarized in "Inverter Information" below.)
Minimum V-PPTV of Inverter	200	(Data from inverter cut sheet summarized in "Inverter Information" below.)
Min. Temp. Correction (MinTCF)	1.17	Record cold temperature derating factor per NEC 690-7.
	-17	Input record low temperature in degrees Celsius.
Max. Temp Correction (MaxTCF)	0.917	(Record high temperature derating factor.)
	25	Input testing temperature rating for PV Module in degrees Celsius.
	48	Input record high temperature in degrees Celsius.
	0.360	Input Temperature Coefficient (%TC V-MP drop per degree) from data sheet.
Maximum # of Modules / String	14.74	(Maximum Inverter V-OC / (Module V-OC x MinTCF))
Minimum # of Modules / String	5.32	(Minimum Inverter V-PPTV / (Module V-MP X MaxTCF))
Proposed # of Modules / String	14	Whole number between Maximum and Minimum Modules / String
Number of Strings	52.0	(Must be a whole number - adjust Number of Modules / Modules per String.)
String V-OC	690.2	(Module V-OC X Number of Modules / String.)
String V-MP	574	(Module V-MP X Number of Modules / String.)
String A-CONT	13.09	Module I-SC X 1.25
String A-CONT LCL	16.36	Module String A-CONT X 1.25
Temperature Derating Factor	0.82	Per NEC 690.31
String A-CONT LCL Temp. Derated	19.95	String A-CONT X 1.25 / Temperature Derating Factor

PV INVERTER INFORMATION		
Inverter kW	60.0	Input data from inverter manufacturer data sheet.
Inverter Output Voltage	480	Input data from inverter manufacturer data sheet.
Inverter Phase	3	Input data from inverter manufacturer data sheet.
Inverter Wires	4	Input data from inverter manufacturer data sheet.
Inverter Nameplate Output Amps	72.3	Input data from inverter manufacturer data sheet.
Inverter A-CONT LCL	90.4	Nampeplate Amps X 1.25
Inverter A/C Output Feeder Fusing	100	Standard size greater than Inverter A-CONT LCL. Standard sizes=20,25,30,35,40,45,50,60,70,80,90,100,110,125,150,175,200, 225,250,300,350,400,450,500 and 600A.
Temperature Derating Factor	0.82	Per NEC 690.31
Inverter A-CONT LCL Temp. Derated	121.95	Array A-CONT X 1.25 / Temperature Derating Factor
Inverter Feeder Conductor Amps	125	Standard size greater than Array A-CONT LCL Temp. Derated. Standard sizes=20,25,30,35,40,45,50,60,70,80,90,100,110,125,150,175,200, 225,250,300,350,400,450,500 and 600A.
Inverter Maximum Input V-OC DC	850	Input maximum V-OC voltage from inverter data sheet.
Inverter Minimum Input V-PPTV DC	200	Input low value of MPPT voltage range data from inverter data sheet.

GO solar CALIFORNIA

Incentive Calculator - CSI Standard PV

The CSI-EPBB calculator is a tool available to participants of the CSI Program to determine the EPBB Design Factor and calculate an appropriate incentive level based on a reasonable expectation of performance for an individual system. The CSI-EPBB Calculator has also been created for consumer's to educate themselves on the differences of solar system design and how changes to the PV system's specifications will produce different kilowatt hour results over the course of a year. Please be aware that actual performance of an installed PV system is based on numerous factors, including some factors that may not be considered in the CSI-EPBB Calculator. While this calculator relies on industry-standard assumptions, and is driven by NREL's PV Watts v. 2 calculator, there may be other factors that affect the output of your PV System.

	Proposed
Site Specifications:	
Project Name	CCC Willits - C
ZIP Code	95490
City	Willits
Utility	PG&E
Customer Type	Government/Non-Profit
Incentive Type	PBI
PV System Specifications:	
PV Module	LG Electronics Inc LG405N2W-V5 405.0W STC; 372.7W PTC
Number of Modules	868
Mounting Method	>6" average standoff
DC Rating (kW STC)	351.5400
DC Rating (kW PTC)	323.5036
Inverter	Chint Power Systems America CPS SCA60KTL-DO/US-480 [480V]
Number of Inverters	6
Inverter Efficiency (%)	98.50 %
Shading	Minimal Shading
Tracking	Fixed
Array Tilt (degrees)	30
Array Azimuth (degrees)	180 True North 0°

Estimated Monthly Production

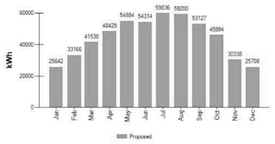

Results	Proposed
Annual kWh	532,175
Summer Months	May-October
Summer kWh	327,355
CEC-AC Rating	**319.651 kW**
Capacity Factor[1]	19.065%
Prevailing Capacity Factor[2]	20.000%
Design Factor[3]	**95.325%**
Eligible Annual kWh[4]	**532,175**
Incentive Rate	**$0.088/kWh**
Incentive[5]	**$234,157**
	The CSI Program has closed in PG&E's service territory and is no longer accepting applications.
Report Generated on	9/21/2020 11:35:22 AM

Notes:

1. **Capacity Factor**: This is the estimated annual output of the proposed system divided by 8760 times the CEC-AC rating.
2. **Prevailing Capacity Factor**: This is 18% during incentive steps 2 and 3 and 20% during incentive steps 4 through 10.
3. **Design Factor**: This is the ratio of the Capacity Factor and the Prevailing Capacity Factor.
4. **Eligible Annual kWh**: For systems greater than 1MW (CEC-AC Rating), this is the prorated estimated annual output of the proposed system.
5. **Incentive**: This is the estimated total incentive for the proposed system, and is calculated as the estimated eligible annual output times the incentive rate times 5 years. The incentive paid will be based on the actual production of the installed system.
   Please be aware that the final CSI incentive rate that is reserved for you will be determined by your CSI Program Administrator at the time your reservation request (RR) application is approved, and may be lower than the current incentive rate shown in the CSI Statewide Trigger Point Tracker. Please note that final incentive amounts are subject to change based upon the configuration of the as-built system. (Per the CSI Handbook, no projects or applications are reserved CSI funding until all required information has been submitted and approved in writing by the Program Administrator.)
6. As of 5/13/57, the CSI-EPBB calculator performs rounding as follows:
   - Estimated kWh production is rounded to the kWh
   - CEC-AC rating is rounded to the watt
   - Capacity factor is rounded to 5 significant digits
   - Design factor is rounded to 5 significant digits

E-mail csi-epbb@aesc-inc.com with questions or comments.

© 2007-2020 California Solar Initiative Program Administrators | conditions of use | privacy policy | accessibility

✱SEE PHOTOVOLTAIC SYSTEM SINGLE LINE DIAGRAM, SHEET E802, AND NOTES FOR G.E.C. SIZE.

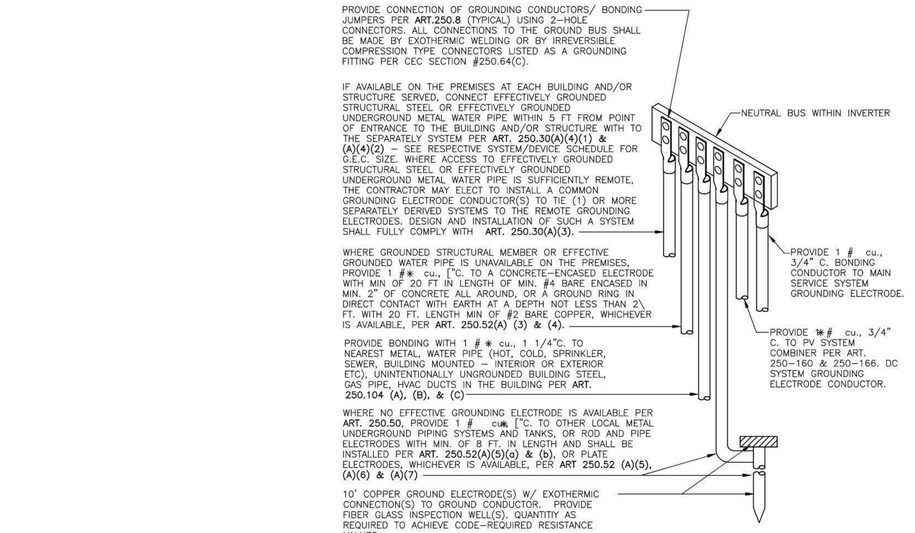

PV SYSTEM AC/DC GROUNDING DETAIL 1

SCALE: NTS

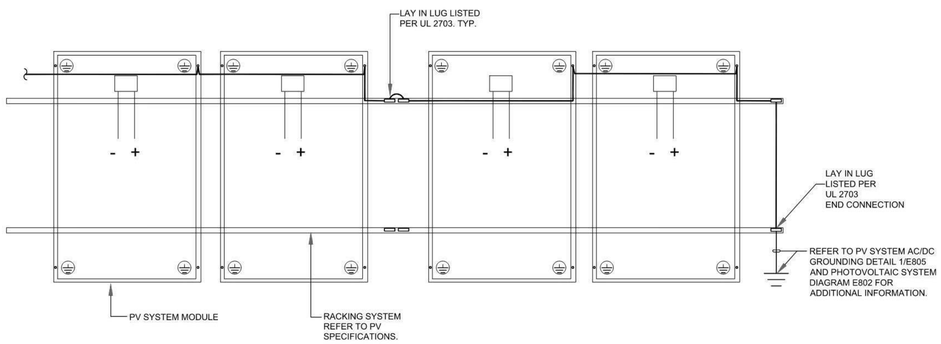

PHOTOVOLTAIC ARRAY AND RAIL GROUNDING DETAIL 2

SCALE: NTS

Plot Date: 3/22/2021 9:00:29 AM
File Name: BIM 360://CCC Willits Residential Center/E_CCC Willits_COMMON_2019-0228A.rvt

IDENTIFICATION STAMP
DIV. OF THE STATE ARCHITECT
APP: 02-118630 INC:
REVIEWED FOR
SS ☐ FLS ☐ ACS ☑
DATE: 04/13/2021

OFFICE OF THE STATE FIRE MARSHAL
APPROVED FIRE AND PANIC ONLY
Approval of this plan does not authorize or approve any omission or deviation from applicable regulations. Final approval is subject to field inspection. One set of approved plans shall be available on the project site at all times.
PERMIT NO.: 20-N-2332-CP
REVIEWED BY: LEO CATAYLO, OSFM
DATE: 4/1/2021

DGS GENERAL SERVICES
Department of General Services
State of California
Real Estate Services Division
Project Management & Development Branch
707 Third Street, Suite 4-105
West Sacramento, California 95605

NICHOLS MELBURG & ROSSETTO ARCHITECTS + ENGINEERS
300 Knollcrest Drive
Redding, CA. 96002
(530) 222-3300 (530) 222-3538 FAX
http://www.nmrdesign.com

Copyright © 2019
All ideas, designs, arrangements and plans indicated or represented by this drawing are owned by, and the property of, NICHOLS, MELBURG and ROSSETTO and were created, evolved and developed for use on, and in conjunction with, the specified project. None of such ideas, designs, arrangements or plans shall be used by, or disclosed to any person, firm or corporation for any purpose whatsoever without the written permission of NICHOLS, MELBURG and ROSSETTO.

LICENSE STAMPS

REGISTERED PROFESSIONAL ENGINEER RAYMOND W. SIRVET No. E15610 12/31/2021 ELECTRICAL CIVIL STATE OF CALIFORNIA
Date Signed: 3/25/2021

CONSULTANT
tk1sc COLLABORATIVE
11870 Pierce Street, Suite 160
Riverside, California 92505
951.299.4160 www.tk1sc.com
Project Leader - Jerry Leonhardt
Electrical Lead - Reid Cordry
tk1sc Job #:2019-0228A

DRAWING STATUS
CONSTRUCTION DOCUMENTS

ISSUE

No.	Date	Description
1	10/20/2020	INITIAL PLAN REVIEW
2	01/22/2021	AGENCY RESUBMITTAL
3	03/22/2021	AGENCY RESUBMITTAL

If drawing is not 30" x 42" it is a reduced print

PROJECT
RESIDENTIAL CENTER, UKIAH: REPLACEMENT OF EXISTING RESIDENTIAL CENTER
440 EAST HILL ROAD
WILLITS, CALIFORNIA 95490
MENDOCINO COUNTY
CALIFORNIA CONSERVATION CORP

Supervisor	Designed	Drawn
		Author

DSA Application No.
02-118630

SHEET TITLE
PV EQUIPMENT

DGS Project Number: 000000000001826
NMR Project Number: 18-6456

Reference North: NORTH
Sheet Scale:
Sheet Number: E805

ISSUE DATE
July 9, 2021

SYSTEM SIGNAGE

ALL SIGNAGE SHALL BE IN PLASTIC, RED IN COLOR, WITH WHITE UPPERCASE LETTERING. ALL FONT SHALL BE ARIAL OR SIMILAR FONT, 3/8" MINIMUM HEIGHT, NON-BOLD. ALL SIGNAGE SHALL BE ATTACHED WITH APPROVED ADHESIVE.

REQUIRED WARNING LABELS

MARKING IS REQUIRED ON ALL INTERIOR AND EXTERIOR DC CONDUIT, RACEWAYS, ENCLOSURES, CABLE ASSEMBLIES, AND JUNCTION BOXES TO ALERT THE FIRE SERVICE TO AVOID CUTTING THEM. MARKING SHALL BE PLACED ON ALL INTERIOR AND EXTERIOR DC CONDUIT, RACEWAYS, ENCLOSURES, AND CABLE ASSEMBLIES, EVERY TEN FEET AND ABOVE AND/OR BELOW PENETRATIONS AND ALL DC COMBINER AND JUNCTION BOXES.

SPECIFIC SIGNAGE NOTES:

1 PROVIDE FINAL SYSTEM VALUES AS REQUIRED.

DC CONDUITS & BOXES

WARNING: PHOTOVOLTAIC POWER SOURCE

PER NEC 690.31(G)(3), IFC 605.11.1.2
RED BACKGROUND WITH REFLECTIVE LETTERING
PLACE AT CONDUITS, RACEWAYS, ENCLOSURES, COMBINER BOXES AND DISCONNECTS
PLACE EVERY 10' ON CONDUITS.

DC J-BOXES

⚠ WARNING

PV DC POWER SOURCE

NO OTHER CIRCUITS

PLACE AT DC JUNCTION BOXES

AC J-BOXES

⚠ WARNING

PV AC POWER SOURCE

NO OTHER CIRCUITS

PLACE AT AC JUNCTION BOXES

INVERTERS

PHOTOVOLTAIC DC DISCONNECT

MAXIMUM VOLTAGE 1000 VDC

MAX CIRCUIT CURRENT ? AMPS

1

PER NEC 690.53
PLACE AT DC DISCONNECT

INVERTER ?

PLACE AT EACH INVERTER
PROVIDE CORRECT INVERTER NUMBER AT EACH LOCATION

AT MAIN SERVICE DISCONNECT

⚠ CAUTION

POWER TO THIS SERVICE IS SUPPLIED FROM MULTIPLE SOURCES:

1. **UTILITY**: DISCONNECT LOCATED IN MAIN ELECTRICAL SWITCHBOARD
2. **SOLAR PV**: DISCONNECT LOCATED IN MAIN ELECTRICAL SWITCHGEAR

PER 705.10
PLACE AT SERVICE EQUIPMENT LOCATION

AT PV SUBPANEL/AC COMBINER

⚠ WARNING

THIS EQUIPMENT FED FROM MULTIPLE SOURCES. TOTAL RATING OF ALL OVERCURRENT DEVICES, EXCLUDING MAIN SUPPLY OVERCURRENT DEVICE, SHALL NOT EXCEED AMPACITY OF BUSBAR.

PER 705.12(B)
PLACE AT INTERCONNECTION LOCATION FOR LOAD SIDE CONNECTION MEETING THE REQUIREMENTS OF NEC 705.12(B)(2)(3)(C)

⚠ WARNING

PHOTOVOLTAIC SYSTEM COMBINER PANEL

DO NOT ADD LOADS

PLACE AT AC COMBINER PANELS

MAP 6" X 10" RED W/ WHT LTRS

CAUTION:

PHOTOVOLTAIC POWER TO THIS SWITCHGEAR IS ALSO SUPPLIED FROM THE FOLLOWING SOURCE WITH DISCONNECTS AS SHOWN

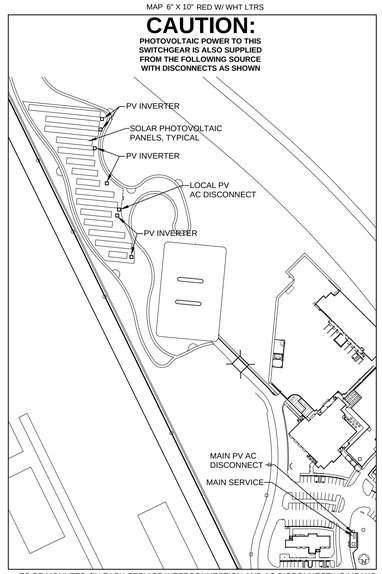

• TO BE MOUNTED ON EACH SERVICE INTERCONNECTION AND AC DISCONNECTING MEANS

AC DISCONNECTS (OTHER THAN MAIN)

PHOTOVOLTAIC SYSTEM AC DISCONNECT

OPERATING VOLTAGE 480 V 3ϕ

OPERATING CURRENT ? AMPS

PER NEC 690.54, 690.13
PLACE AT AC DISCONNECT / POINT OF INTERCONNECTION

1

POINT OF CONNECTION TO BUILDING ELECTRICAL CIRCUITS

⚠ WARNING

POWER SOURCE OUTPUT CONNECTION

DO NOT RELOCATE THIS OVERCURRENT DEVICE

PER NEC 705.12(B)(2)(3)(b)
PLACE AT INTERCONNECTION BREAKER FOR LOAD SIDE CONNECTION

⚠ CAUTION

SOLAR ELECTRIC BREAKER IS BACKFED

PLACE AT INTERCONNECTION BREAKER FOR LOAD SIDE TAP

PHOTOVOLTAIC SYSTEM AC DISCONNECT

OPERATING VOLTAGE 480 V 3ϕ

OPERATING CURRENT ? AMPS

PER NEC 690.54
PLACE AT AC DISCONNECT / POINT OF INTERCONNECTION

1

⚠ CAUTION

POWER TO THIS SERVICE IS SUPPLIED FROM MULTIPLE SOURCES:

1. **UTILITY**: DISCONNECT LOCATED IN MAIN ELECTRICAL ROOM
2. **SOLAR PV**: DISCONNECT LOCATED ON BUILDING EXTERIOR AND IN ELECTRICAL ROOM

PER 705.10
PLACE AT SERVICE EQUIPMENT LOCATION

THIS PANEL SUPPLIED BY TWO POWER SOURCES

SOLAR PV 480 VOLTS, ?? AMPS

UTILITY 480 VOLTS, 1600 AMPS

1

PLACE AT PANELBOARDS FED FROM MULTIPLE SOURCES

NET METER

NET METER

[**PLACARD**] PLACE AT NET METER

IDENTIFICATION STAMP
DIV. OF THE STATE ARCHITECT
APP: 02-118630 INC:
REVIEWED FOR
SS ☐ FLS ☐ ACS ☑
DATE: 04/13/2021

OFFICE OF THE STATE FIRE MARSHAL
APPROVED FIRE AND PANIC ONLY
Approval of this plan does not authorize or approve any omission or deviation from applicable regulations. Final approval is subject to field inspection. One set of approved plans shall be available on the project site at all times.
PERMIT NO.: 20-N-2332-CP
REVIEWED BY: LEO CATALLO, OSFM
DATE: 4/1/2021

DGS GENERAL SERVICES
Department of General Services
State of California
Real Estate Services Division
Project Management & Development Branch
707 Third Street, Suite 4-105
West Sacramento, California 95605

NICHOLS MELBURG & ROSSETTO ARCHITECTS + ENGINEERS
300 Knollcrest Drive
Redding, CA. 96002
(530) 222-3300 (530) 222-3538 FAX
http://www.nmrdesign.com

Copyright © 2019
All ideas, designs, arrangements and plans indicated or represented by this drawing are owned by, and the property of, NICHOLS, MELBURG and ROSSETTO and were created, evolved and developed for use on, and in conjunction with, the specified project. None of such ideas, designs, arrangements or plans shall be used by, or disclosed to any person, firm or corporation for any purpose whatsoever without the written permission of NICHOLS, MELBURG and ROSSETTO.

LICENSE STAMPS

REGISTERED PROFESSIONAL ENGINEER RAYMOND W. SIMPSON No. E15610 12/31/2021 STATE OF CALIFORNIA CIVIL
Date Signed: 3/25/2021

CONSULTANT
tklsc COLLABORATIVE
11870 Pierce Street, Suite 160
Riverside, California 92505
951.299.4160 www.tk1sc.com
Project Leader - Jerry Leonhardt
Electrical Lead - Reid Cordry
tk1sc Job #:2019-0228A

DRAWING STATUS
CONSTRUCTION DOCUMENTS

ISSUE

No.	Date	Description
1	10/20/2020	INITIAL PLAN REVIEW
2	01/22/2021	AGENCY RESUBMITTAL
3	03/22/2021	AGENCY RESUBMITTAL

If drawing is not 30" x 42" it is a reduced print

PROJECT
RESIDENTIAL CENTER, UKIAH: REPLACEMENT OF EXISTING RESIDENTIAL CENTER
440 EAST HILL ROAD
WILLITS, CALIFORNIA 95490
MENDOCINO COUNTY
CALIFORNIA CONSERVATION CORP

Supervisor	Designed	Drawn
		Author

DSA Application No.
02-118630

SHEET TITLE
PV SIGNAGE

DGS Project Number: 0000000000001826
NMR Project Number: 18-6456

Reference North: NORTH
Sheet Scale:
Sheet Number: E806

ISSUE DATE
July 9, 2021

Plot Date: 3/22/2021 9:00:30 AM
File Name: BIM 360://CCC Willits Residential Center/E_CCC Willits_COMMON_2019-0228A.rvt

SEQUENCE OF OPERATIONS

ACTION / DEVICE	120 VOLT POWER FAILURE	SYSTEM TROUBLE, WIRING FAULT OR OPEN, GROUND FAULT, SYSTEM LOW BATTERY, CIRCUIT SHORT	MANUAL PULL STATION	AREA SMOKE DETECTOR	AREA CARBON MONOXIDE DETECTOR	SMOKE/FIRE DAMPER SMOKE DETECTOR	SPRINKLER WATER FLOW SWITCH	SPRINKLER VALVE TAMPER SWITCH (SUPERVISORY)	SPRINKLER POST INDICATOR SWITCH (SUPERVISORY)	EMERGENCY GENERATOR RUNNING	EMERGENCY GENERATOR FAIL	EMERGENCY GENERATOR HI / LOW FUEL LEVEL	KNOX BOX TAMPER
SOUND CONTROL PANEL TROUBLE BUZZER	YES	YES	NO	NO	YES	NO	NO	NO	NO	NO	NO	NO	NO
SOUND CONTROL PANEL SUPERVISORY BUZZER	NO	NO	NO	NO	YES	NO	NO	YES	YES	YES	YES	YES	YES
SOUND CONTROL PANEL ALARM BUZZER	NO	NO	YES	YES	YES	YES	YES	NO	NO	NO	NO	NO	NO
ACTIVATE RELAY FOR CENTRAL STATION MONITORING	YES	YES	YES	YES	YES	YES	YES	YES	YES	YES	YES	YES	YES
ANNUNCIATE AT FIRE ALARM CONTROL PANEL (ALARM)	NO	NO	YES	YES	YES	YES	YES	NO	NO	YES	YES	NO	NO
ANNUNCIATE AT FIRE ALARM CONTROL PANEL (TROUBLE)	YES	YES	NO	NO	NO	NO	NO	NO	NO	YES	YES	YES	YES
ANNUNCIATE AT REMOTE ANNUNCIATOR PANEL (ALARM)	NO	NO	YES	YES	YES	YES	YES	NO	NO	YES	YES	NO	NO
ANNUNCIATE AT REMOTE ANNUNCIATOR PANEL (TROUBLE)	YES	YES	NO	NO	NO	NO	NO	NO	NO	YES	YES	YES	YES
ACTIVATE NOTIFICATION (AUDIBLE/VISUAL) ALARM SIGNAL THROUGHOUT BLDG	NO	NO	YES	YES	NO	YES	YES	NO	NO	NO	NO	NO	NO
SOUND SPRINKLER BELL ALARM -	NO	NO	NO	NO	NO	NO	YES	NO	NO	NO	NO	NO	NO
SHUT DOWN ASSOCIATED AIR HANDLING (HVAC) THROUGHOUT BUILDING	NO	NO	NO	YES	NO	YES	YES	NO	NO	NO	NO	NO	NO
CLOSE COMBO SMOKE/ FIRE DAMPERS THROUGH FLOOR OF ALARM (1)	YES	NO	NO	YES	NO	YES	YES	NO	NO	NO	NO	NO	NO
NOTIFY FIRE DEPARTMENT VIA MONITORING STATION -	NO	NO	YES	YES	YES	YES	YES	NO	NO	NO	NO	NO	YES
RETURN LIGHTING TO 100% OF LUMEN OUTPUT UPON ACTIVATION OF SYSTEM	NO	NO	YES	YES	NO	YES	YES	NO	NO	NO	NO	NO	NO
SHUTDOWN AUTONOMOUS PUBLIC ADDRESS SYSTEM UPON ACTIVATION OF SYSTEM	NO	NO	YES	YES	NO	YES	YES	NO	NO	NO	NO	NO	NO

(1) PER CMC, SECTION 605.8, When the automatic activation of a smoke damper or a combination smoke-fire damper occurs, the HVAC system serving such dampers shall immediately shut down. The HVAC system shall not be restarted again until all the dampers are reset and fully opened. ALL HVAC UNITS CONTAINING COMBINATION SMOKE FIRE DAMPERS AS PART OF THEIR DUCTING SYSTEM SHALL BE PROVIDED WITH SHUNT RELAYS AND DEVICES FOR IMMEDIATE SHUT DOWN UPON THE ACTIVATION / CLOSURE OF ASSOCIATED COMBINATION SMOKE FIRE DAMPERS.

FIRE ALARM NOTES

1. WALL MOUNTED, AUDIBLE NOTIFICATION DEVICES SHALL HAVE THEIR TOPS MOUNTED AT 90" MINIMUM AND 100" MAXIMUM ABOVE THE FINISHED FLOOR, AND NO CLOSER THAN 6" TO A HORIZONTAL STRUCTURE. (NFPA 72, SECTION 18.4.8.1). ALL WALL MOUNTED VISUAL APPLIANCES AND COMBINATION AUDIBLE/VISUAL APPLIANCES SHALL HAVE THEIR BOTTOMS MOUNTED AT 80" MINIMUM AND 96" MAXIMUM ABOVE FINISHED FLOOR AS MEASURED TO THE LENS. (NFPA 72, SECTION 18.5.5.1)
2. ALL EQUIPMENT SHALL BE U.L. AND C.S.F.M. LISTED.
3. ALL FIRE ALARM WIRING SHALL BE FLP (FIRE POWER LIMITED) OR FPLP (FIRE POWER LIMITED PLENUM) AS REQUIRED FOR APPLICATION. WIRING IN CONDUIT ABOVE GROUND MAY BE THHN OR THWN.
4. PER THE CEC, ALL WIRING IS TO BE PULLED THROUGH EACH JUNCTION BOX AND CONNECTED DIRECTLY TO EACH FIRE DEVICE. DO NOT SPLICE THE WIRE. THERE MUST BE AT LEAST 6' OF LEAD WIRE FROM THE BOX TO THE DEVICE. ALL BOXES TO BE SIZED PER CEC AND SHALL HAVE THEIR COVERS PAINTED RED WHERE APPLICABLE.
5. DO NOT DEVIATE FROM CONDUIT RUNS AS SHOWN ON FLOOR PLANS WITHOUT PRIOR APPROVAL FROM ELECTRICAL ENGINEER. FACTORS SUCH AS EXCESSIVE VOLTAGE DROP, ADDITIONAL PARTS, ENGINEERING, ETC., THAT ARE A RESULT OF CONDUIT RUN DEVIATIONS SHALL BE THE SOLE RESPONSIBILITY OF THE ELECTRICAL CONTRACTOR.
6. ALL FAN SHUTDOWN FUNCTIONS, DAMPER CLOSURES AND ASSOCIATED MECHANICAL SYSTEM FIRE ALARM INTERFACE SHALL BE BY MECHANICAL CONTRACTOR, AND SHALL BE COORDINATED WITH FIRE ALARM SYSTEM.
7. ALL DUCT SMOKE DETECTORS SHALL BE MOUNTED BY THE MECHANICAL CONTRACTOR. DUCT SMOKE DETECTORS EXPOSED TO THE WEATHER SHALL BE C.S.F.M. LISTED FOR OUTDOOR INSTALLATION, AND WEATHER PROTECTED BY THE MECHANICAL CONTRACTOR. ALL AIR VELOCITY TESTING SHALL BE PERFORMED BY THE MECHANICAL CONTRACTOR.
8. ALL FIRE ALARM DEVICE BACKBOXES, FIRE ALARM TERMINAL CABINETS, GUTTERS, JUNCTION BOXES AND ASSOCIATED CONDUITS SHALL BE FURNISHED AND INSTALLED BY ELECTRICAL CONTRACTOR UNLESS OTHERWISE NOTED. REFER TO FIRE ALARM SYMBOL LIST AND/OR MOUNTING DETAILS FOR ADDITIONAL INFORMATION. SYSTEM SUPPLIER PROVIDED BACKBOXES SHALL BE INSTALLED BY ELECTRICAL CONTRACTOR UNLESS OTHERWISE NOTED.
9. SMOKE DETECTOR TESTING SHALL BE PERFORMED TO ENSURE THAT EACH DETECTOR IS WITHIN ITS LISTED AND MARKED SENSITIVITY RANGE USING THE METHODS RECOMMENDED PER CFC, SECTION 907.8.4 AND NFPA 72, SECTION 14.4.4.3.4.
10. ALL WIRING, INITIATING DEVICES AND ANNUNCIATOR PANEL SHALL BE SUPERVISED TO THE PRINCIPAL POINT OF ANNUNCIATION. THE FIRE ALARM CONTROL PANEL TO SUPERVISE THE ANNUNCIATOR PANEL, ALL INITIATING AND INDICATING DEVICE CIRCUITS.
    - A. INITIATING DEVICE CIRCUITS (IDC): CLASS B
    - B. SIGNALING LINE CIRCUITS (SLC): CLASS B
    - C. NOTIFICATION APPLIANCE CIRCUITS (NAC): CLASS B
11. ALL WIRING SHALL BE CUT FOR IN AND OUT. WIRING SHALL NOT BE LOOPED THROUGH DEVICES.
12. POINT AND COMMON ANNUNCIATION AND T-TAPPING ARE PROHIBITED. (T-TAPPING IS ALLOWABLE ON SLC LOOPS).
13. PROVIDE 3/4" CONDUIT FROM FIRE ALARM CONTROL PANEL TO TELEPHONE BACKBOARD FOR OWNER PROVIDED CENTRAL STATION MONITORING, WHEN APPLICABLE.
14. CONTRACTOR TO FIELD VERIFY AND PROVIDE DECIBEL METER FOR TESTING OF AMBIENT NOISE LEVELS AUDIBLE DEVICES TO BE AT LEAST 15 DBA ABOVE THE AVERAGE AMBIENT SOUND LEVEL BUT NOT LESS THAN 75 DBA AT 10 FEET OR 5 DBA ABOVE THE MAXIMUM SOUND LEVEL BUT NOT MORE THAN 110 DBA AT THE MINIMUM HEARING DISTANCE. SOUND LEVEL SHALL BE MAINTAINED FOR DURATION OF AT LEAST 60 SECONDS. (CFC, SECTION 907.5.2.1.1) THE CONTRACTOR SHALL ADJUST/INSTALL ALL DEVICES TO MAXIMIZE PERFORMANCE AND TO MINIMIZE FALSE ALARMS. PROVIDE UPDATED PLANS AND CALCULATIONS THROUGH THE "CHANGE ORDER" PROCESS WHEN INSTALLING ADDITIONAL DEVICES.
15. VISUAL DEVICES SHOULD NOT EXCEED 2 FLASHES PER SECOND AND SHOULD NOT BE SLOWER THAN 1 FLASH EVERY SECOND. THE DEVICE SHALL HAVE A PULSING LIGHT SOURCE NOT LESS THAN 15-CANDELA. VISUAL DEVICES WITHIN 55' FROM EACH OTHER SHALL BE SYNCHRONIZED.
16. ALL FIRE ALARM CIRCUITS SHALL BE IN CONDUIT, APPROVED SURFACE RACEWAY OR OPEN RUN ABOVE CEILINGS, UNDER FLOORS AND IN WALLS IN A NEAT AND PROTECTED MANNER AS INDICATED ON THE DESIGN DOCUMENTS. EXPOSED CIRCUITS ARE ONLY PERMITTED WHEN NOTED AS EXPOSED ON DESIGN DOCUMENTS. ALL CONDUITS SHALL BE 3/4" MINIMUM. CONTRACTOR TO VERIFY CONDUIT FILL PRIOR TO INSTALLATION. CONDUIT FILL SHALL NOT EXCEED 40% OF THE CROSS-SECTIONAL AREA OF THE CONDUIT PER C.E.C.
17. ALL FLOW SWITCHES SHALL BE 2 WIRE WITH NON-ELECTRONIC RETARD TYPE SIMILAR TO THE SYSTEM SENSOR MODEL "WFD SERIES" ONLY.
18. ALL DEVICES IN THE ALARM SYSTEM SHALL BE COMPATIBLE AND INSTALLED PER MANUFACTURER'S SPECIFICATIONS.
19. SYSTEM SHALL BE FURNISHED AND INSTALLED BY AN AUTHORIZED DISTRIBUTOR.
20. FIRE ALARM SYSTEM INSTALLATION COMPANY SHALL BE UL LISTED (UUJS).
21. FIRE ALARM PANEL, REMOTES, AND COMPONENTS SHALL BE SECURED TO MOUNTING SURFACES PER MANUFACTURER'S SPECIFICATIONS. NO SINGLE DEVICE SHALL EXCEED THE WEIGHT OF 20 LBS. WITHOUT SPECIAL MOUNTING DETAILS.
22. SMOKE DETECTOR SHALL NOT BE ANY CLOSER THAN 1 FOOT FROM FIRE SPRINKLERS OR 3 FEET FROM ANY SUPPLY DIFFUSER. IN THE AREA OF CONSTRUCTION OR WHERE POSSIBLE DAMAGE/CONTANMINATION COULD OCCUR ON NEWLY INSTALLED FIRE ALARM DEVICES, DEVICES SHALL BE COVERED UNTIL THAT AREA IS READY TO BE TURNED OVER TO THE OWNER. DETECTORS THAT HAVE BEEN INSTALLED PRIOR TO FINAL CLEAN-UP BY ALL TRADES SHALL BE CLEANED OR REPLACED IN ACCORDANCE WITH CFC, SECTION 907. CLEANING OR REPLACEMENT OF DEVICES THAT WERE MOUNTED AT THE REQUEST OF THE CONTRACTOR WILL NOT BE PERFORMED WITHOUT WRITTEN AUTHORIZATION THAT ASSUMES FINANCIAL RESPONSIBILITY FOR COSTS INCURRED. TESTING OF DETECTORS SHALL BE PERFORMED PER NFPA 72, SECTION 14.4.5.3 AND CFC, SECTION 907.8.4.
23. PER CBC, SECTION 11B-309 ACTIVATION OF INITIATING DEVICE SHALL NOT REQUIRE MORE THAN 5 LBS. (22.2N) OF FORCE OR REQUIRE TIGHT GRASPING PINCHING, OR TWISTING OF WRIST.
24. THE SYSTEM SHALL CONFORM TO CALIFORNIA CODE OF REGULATIONS (CCR) TITLES 19 AND 24 AS APPLICABLE TO THIS PROJECT.
25. NOT USED.
26. A DEDICATED 120V BRANCH CIRCUIT SHALL BE PROVIDED FOR FIRE ALARM EQUIPMENT, THIS CIRCUIT SHALL BE ENERGIZED FROM THE COMMON USE AREA PANEL AND SHALL HAVE NO OTHER OUTLETS. THE BREAKER SHALL HAVE A RED LOCKING DEVICE TO BLOCK THE HANDLE IN THE "ON" POSITION AND BE LABELED AS FOLLOWS:
    - A. "FIRE ALARM" FOR FIRE ALARM SYSTEMS
    - B. "EMERGENCY COMMUNICATIONS" FOR EMERGENCY COMMUNICATION SYSTEMS, OR
    - C. "FIRE ALARM/ECS" FOR COMBINATION FIRE ALARM AND COMMUNICATIONS SYSTEMS.
27. WHERE A DETECTOR IS INSTALLED ABOVE THE CEILING, THE DETECTOR SHALL BE EASILY ACCESSIBLE AND THE LOCATION OF THE DETECTOR SHALL BE CLEARLY MARKED. FOR DUCT SMOKE DETECTORS A REMOTE TEST STATION SHALL BE PROVIDED. ELECTRICAL CONTRACTOR SHALL FURNISH ACCESS PANELS TO AREAS THAT REQUIRE SERVICING, TROUBLE SHOOTING, ETC.
28. THE "END OF LINE RESISTANCE" OF EACH CIRCUIT SHALL BE TESTED IN THE PRESENCE OF THE I.O.R. AND SHALL NOT EXCEED THE LISTED MANUFACTURER'S MINIMUM OPERATING VOLTAGE.
29. UNDERGROUND AND EXTERIOR CONDUITS TO HAVE WATERTIGHT FITTINGS AND WIRE LISTED FOR WET LOCATIONS, IN ACCORDANCE WITH CEC, SECTIONS 110.11, 300.5(B), 300.6, 300.9, 310.10, AND 760.3(D).
30. FIRE ALARM SYSTEM IS A FULLY AUTOMATIC SYSTEM. CONTRACTOR TO UTILIZE AREA COVERAGE SMOKE DETECTORS AND ADDRESSABLE CONTROL RELAYS FOR THE SHUTDOWN AND/OR CLOSURE OF HVAC UNITS AND COMBINATION SMOKE/FIRE DAMPERS. CONTROL RELAYS TO BE LOCATED WITHIN 3FT OF THE CONTROLLED CIRCUIT OR APPLIANCE PER NFPA 72, SECTION 21.2.4.
31. PROVIDE (VIA CHANGE ORDER PROCESS) APPROPRIATE MANUFACTURER PRODUCT DATA SHEETS AND APPLICABLE CSFM LISTINGS FOR ALL SUBSTITUTED MANUFACTURER'S MATERIAL, EQUIPMENT OR APPLIANCES, TO DSA PRIOR TO START OF INSTALLATION.
32. CONTRACTOR SHALL PROVIDE FIRE WATCH FOR ALL OCCUPIED AREAS OF WORK WHERE THE REQUIRED FIRE ALARM SYSTEM IS OUT OF SERVICE FOR THE DURATION OF THE SYSTEM OUTAGE. FIRE WATCH AND SYSTEM/EQUIPMENT SHALL BE PER CFC, SECTION 901.7.
33. NOT USED.
34. NOT USED.
35. NOT USED.
36. CARBON MONOXIDE DETECTORS SHALL BE EQUIPPED WITH A COMPATIBLE SOUNDER BASE. UPON DETECTION THE AUDIBLE CARBON MONOXIDE SENSING DETECTORS SHALL PRODUCE A FOUR-PULSE TEMPORAL PATTERN SIGNAL WITHIN THE IMMEDIATE AREA AND COMPLY WITH NFPA 720, SECTION 5.8.6.5.
37. ALL MEMBRANE AND THROUGH-PENETRATIONS OF RATED ASSEMBLIES SHALL BE PROTECTED BY AN APPROVED FIRE STOP SYSTEM AS IDENTIFIED IN CBC, CHAPTER 7, UL OR OTHER LAB TESTING CRITERIA. APPROVED TYPES OF MATERIALS SHALL BE IDENTIFIED WITHIN THE FIRE ALARM SECTION OF THE PROJECT SPECIFICATIONS.
38. CONTROL PANELS AND REMOTE ANNUNCIATORS SHALL BE INSTALLED WITH THEIR BOTTOMS MOUNTED AT 48" ABOVE THE FINISHED FLOOR.
39. FIRE ALARM CIRCUITS SHALL BE GROUNDED IN ACCORDANCE WITH C.E.C. - ARTICLE 250.

FIRE ALARM SYSTEM TESTING NOTES:

1. INSTALLATION OF THE SYSTEMS SHALL NOT BE STARTED UNTIL DETAILED DESIGN DOCUMENTS AND SPECIFICATIONS, INCLUDING STATE FIRE MARSHAL LISTING NUMBERS FOR EACH COMPONENT OF THE SYSTEM HAS BEEN APPROVED BY DSA.
2. A STAMPED SET OF APPROVED FIRE ALARM DESIGN DOCUMENTS SHALL BE ON THE JOB SITE AND USED FOR INSTALLATION.
3. DISTRICT SHALL PROVIDE A CERTIFIED IMPARTIAL FIRE ALARM INSPECTOR. DSA, ARCHITECT/ENGINEER AND OWNER SHALL BE NOTIFIED A MINIMUM OF 48 HOURS PRIOR TO THE FINAL INSPECTION AND/OR TESTING.
4. 100% OF THE SYSTEM IN CONTRACT WILL BE TESTED AND INSPECTED WITH THE CONTRACTOR OR CONTRACTOR'S SUB AND DISTRICT'S ETS STAFF MEMBER PRESENT. INSPECTION WILL INCLUDE, BUT NOT BE LIMITED TO, REMOVING STROBES/HORNS TO CHECK FOR "T-TAPS", REMOVING J-BOX COVERS TO CHECK WIRE GAGE AND SPLICES.
5. FOLLOW ALL REQUIREMENTS AND INSTRUCTIONS PROVIDED BY MANUFACTURER UPON INSTALLATION OF MANUFACTURER'S PRODUCTS AND DEVICES.
6. PRIOR TO REQUESTING FINAL APPROVAL OF THE INSTALLATION, THE INSTALLING CONTRACTOR SHALL FURNISH A WRITTEN STATEMENT TO THE FIRE CODE OFFICIAL THAT THE SUBJECT FIRE PROTECTION SYSTEM HAS BEEN INSTALLED IN ACCORDANCE WITH APPROVED PLANS AND HAS BEEN TESTED IN ACCORDANCE WITH THE MANUFACTURER'S SPECIFICATIONS AND THE APPROPRIATE INSTALLATION STANDARD. ANY DISCREPANCIES BETWEEN THE DRAWINGS AND THE CODE OR RECOGNIZED STANDARDS SHALL BE BROUGHT TO THE ATTENTION OF DSA AND THE ARCHITECT/ENGINEER OF THE PROJECT. ANY DEVIATIONS FROM THE DESIGN STANDARDS SHALL BE NOTED AND COPIES OF THE APPROVALS FOR SUCH DEVIATIONS SHALL BE ATTACHED TO THE WRITTEN STATEMENT. (CFC, SECTION 901.2.1)
7. UPON COMPLETION OF SYSTEM INSTALLATION, THE SYSTEM SHALL BE TESTED IN THE PRESENCE OF AND IN A MANNER ACCEPTABLE TO DSA/I.O.R. CONTRACTOR SHALL SUPPLY NECESSARY TESTING EQUIPMENT, INCLUDING A "SOUND LEVEL METER" TO CHECK ACCEPTABLE NOISE LEVELS OF AUDIBLE DEVICES. PROVIDE TEST RESULTS PER NFPA 72 TO ARCHITECT, D.S.A., I.O.R. AND TO LOCAL FIRE AUTHORITY, PER CFC, SECTION 907.8.2.
8. INSPECTION, TESTING AND MAINTENANCE SHALL BE IN COMPLIANCE WITH NFPA 72, CHAPTER 14, REACCEPTANCE TESTING SHALL BE IN COMPLIANCE WITH NFPA 72, SECTION 14.4.2.
9. LOCAL FIRE AUTHORITY NOTIFICATION TO BE DOCUMENTED AND RECORDED AS "UNAVAILABLE" OR "CONFIRM WHEN PRESENT".
10. PRIOR TO COMPLETION OF FIRE ALARM SYSTEM THE TWO WAY COMMUNICATION SYSTEM SHALL BE TESTED AND CERTIFIED VIA NFPA 72 EMERGENCY COMMUNICATION SYSTEM SUPPLEMENTARY RECORD OF INSPECTION AND TESTING FORM.
11. THE INSTALLING CONTRACTOR SHALL PROVIDE A COMPLETED RECORD OF COMPLETION PER NFPA 72, FIGURE 7.8.2(A) THROUGH (I) AS APPLICABLE. A COMPLETE RECORD OF THE TESTS AND OPERATIONS OF EACH SYSTEM SHALL BE KEPT UNTIL THE NEXT TEST AND FOR ONE YEAR AFTER PER NFPA 72, SECTION 7.7.1.
12. FIRE ALARM SYSTEM DOCUMENTS SHALL BE HOUSED IN THE DOCUMENT CABINET. THE DOCUMENT CABINET SHALL BE INSTALLED AT THE SYSTEM CONTROL UNIT OR AT ANOTHER APPROVED LOCATION AT THE PROTECTED PREMISES AS REQUIRED BY NFPA 72, SECTION 7.7.2.
13. THE INSTALLING CONTRACTOR SHALL PROVIDE SYSTEM PROGRAMMING FOR SUPERVISORY MONITORING PER CFC, SECTION 907.6.6. SUPERVISORY MONITORING SHALL BE TESTED AND VERIFIED AS SENDING CORRECT SIGNALS IN CONJUNCTION WITH FINAL ACCEPTANCE TEST. OWNER SHALL BE RESPONSIBLE FOR ESTABLISHING AND MAINTAINING A FIRE ALARM SYSTEM MONITORING CONTRACT.

FIRE ALARM SYMBOL LIST

SYMBOL	DESCRIPTION	MODEL	MANUFACTURER	BACKBOX	MOUNTING HEIGHT	C.S.F.M. NUMBER
FACP	FIRE ALARM CONTROL PANEL	NFS2-640	NOTIFIER	PROVIDED	5'-6" A.F.F. TO TOP	7165-0028:0243
FAPS	FIRE ALARM POWER SUPPLY	FCPS-24S6	NOTIFIER	PROVIDED	5'-6" A.F.F. TO TOP	7315-0028:0225
FAAP	REMOTE FIRE ALARM ANNUNCIATOR	LCD-160	NOTIFIER	PROVIDED	5'-6" A.F.F. TO TOP	7120-0028:0227
COMM	CENTRAL STATION COMMUNICATOR	UDACT	NOTIFIER	PROVIDED	VERIFY IN FIELD	7300-0028:0174
FATC	FIRE ALARM TERMINAL CABINET	N/A	BY ELECTRICIAN	18"SQ. x 6"D U.N.O. (RED)	VERIFY IN FIELD	N/A
MS	MANUAL PULL STATION (ADDRESSABLE)	NBG-12LX	NOTIFIER	4S DEEP BOX W/ SINGLE GANG RING	48" A.F.F. TO TOP OF ACTIVATING HANDLE	7150-0028:0199
SD	AREA SMOKE DETECTOR (ADDRESSABLE PHOTO)	FSP-951 B300-6 (BASE)	NOTIFIER	4S DEEP BOX W/ 3-0 RING	CEILING	7272-0028:0503 7300-1653:0109
CO	FIRE/CO DETECTOR (ADDRESSABLE FIRE/CO) WITH SOUNDER BASE	FCO-851 B200S-WH (BASE)	NOTIFIER	4S DEEP BOX W/ 3-0 RING	CEILING	7275-0028:0264 7300-1653:0213
CR	FIRE ALARM RELAY CONTROL MODULE	FRM-1	NOTIFIER	4S DEEP BOX	VERIFY IN FIELD	7300-0028:0219
M	FIRE ALARM MONITOR MODULE	FMM-1	NOTIFIER	4S DEEP BOX	VERIFY IN FIELD	7300-0028:0219
H WP	FIRE ALARM HORN (WEATHERPROOF/WALL)	HRK (RED)	SYSTEM SENSOR	WP BACKBOX PROVIDED	90" A.F.F. TO TOP	7125-1653:0189
HF cd	FIRE ALARM HORN/STROBE (WALL)	P2WL (WHITE)	SYSTEM SENSOR	4S DEEP BOX W/ 4S EXTENSION	80" A.F.F. TO BOTTOM	7135-1653:0503
HF cd	FIRE ALARM HORN/STROBE (CEILING)	PC2WL (WHITE)	SYSTEM SENSOR	4S DEEP BOX W/ 4S EXTENSION	CEILING	7135-1653:0503
F cd	FIRE ALARM STROBE (WALL)	SWL (WHITE)	SYSTEM SENSOR	4S DEEP BOX W/ 4S EXTENSION	80" A.F.F. TO BOTTOM	7125-1653:0504
F cd	FIRE ALARM STROBE (CEILING)	SCWL (WHITE)	SYSTEM SENSOR	4S DEEP BOX W/ 4S EXTENSION	CEILING	7125-1653:0504
SYNC	AUDIBLE/VISUAL SYNC MODULE	MDL3R	SYSTEM SENSOR	5S DEEP BOX W/ 5S EXTENSION	VERIFY IN FIELD	7300-1653:0202
B WP	SPRINKLER RISER BELL (WEATHERPROOF) (24VAC)	SSM24-10	SYSTEM SENSOR	WBB WP BACKBOX	90" A.F.F. TO TOP	7135-1653:0217
B WP	SPRINKLER RISER BELL (WEATHERPROOF) (120VAC)	SSV120-10	SYSTEM SENSOR	WBB WP BACKBOX	90" A.F.F. TO TOP	7135-1653:0217
W	SPRINKLER RISER WATERFLOW DETECTOR	WFDN SERIES	SYSTEM SENSOR	VERIFY IN FIELD	VERIFY IN FIELD	7770-1653:0231
T	SPRINKLER RISER TAMPER SWITCH	OSY2 SERIES	SYSTEM SENSOR	VERIFY IN FIELD	VERIFY IN FIELD	7770-1653:0118
PIV	SPRINKLER RISER POST INDICATOR VALVE	PIBV2	SYSTEM SENSOR	VERIFY IN FIELD	VERIFY IN FIELD	7770-1653:0118
DD	DUCT SMOKE DETECTOR (ADDRESSABLE) WITH REMOTE INDICATOR	DNRW RA100Z	NOTIFIER NOTIFIER	4S DEEP BOX W/ 3-0 RING SINGLE GANG BOX	CEILING CEILING	3240-1653:0209 7300-1653:0212
J	FIRE ALARM JUNCTION BOX	N/A	BY ELECTRICIAN	4S BOX, U.N.O.	VERIFY IN FIELD	N/A

GENERAL FIRE ALARM SYMBOL LIST NOTES:

1. CONFIRM NOTIFICATION DEVICE COLOR (WHITE OR RED) WITH ARCHITECT PRIOR TO ANY ORDER OR INSTALLATION. COLOR TO BE INDICATED IN SHOP DRAWING SUBMITTAL.
2. NOTIFICATION DEVICES IN AREAS WITH COMBINATION FIRE/CO DETECTORS SHALL HAVE NO "FIRE" MARKINGS. ALL OTHER DEVICES TO HAVE "FIRE" MARKING ON THE DEVICE PER MANUFACTURER LISTED OPTIONS.
3. NUMBER ADJACENT TO VISUAL DEVICES INDICATES MINIMUM CANDELLA RATING OF STROBE DEVICE.
4. CARBON MONOXIDE DETECTORS SHALL BE EQUIPPED WITH A COMPATIBLE SOUNDER BASE. UPON DETECTION THE AUDIBLE CARBON MONOXIDE SENSING DETECTORS SHALL PRODUCE A FOUR-PULSE TEMPORAL PATTERN SIGNAL WITHIN THE IMMEDIATE AREA AND COMPLY WITH NFPA 720, SECTION 5.8.6.5.

GENERAL FIRE ALARM ABBREVIATIONS:

A.F.F.	ABOVE FINISHED FLOOR	N/A	NOT APPLICABLE
E.O.L.	END OF LINE RESISTOR	U.N.O.	UNLESS NOTED OTHERWISE
(E)	EXISTING DEVICE	VL	VERIFY LOCATION IN FIELD
F.B.O.	FURNISHED BY OTHERS	WP	WEATHERPROOF DEVICE
TSP	TWISTED SHIELDED PAIR	cd	INDICATED CANDELA RATING OF STROBE DEVICE

WIRING LEGEND

WIRE DESIGNATION	WIRE IN CONDUIT	WIRE IN CONDUIT UNDERGROUND/WET LOC.	UNDERGROUND/WET WIRE DESIGNATION
INITIATING CIRCUITS Z	2 CONDUCTOR #18 FPL TWISTED/ UNSHEILDED W/OVERALL JACKET	2 CONDUCTOR #18 FPL TWISTED/ UNSHEILDED W/OVERALL JACKET	INITIATING CIRCUITS ZU
POWER CKT. P	2 CONDUCTOR #12 THHN STRANDED	2 CONDUCTOR #12 STRANDED TYPE THWN	POWER CKT. PU
NETWORK CONTROL C	2 CONDUCTOR #12 THHN STRANDED	2 CONDUCTOR #12 STRANDED TYPE THWN	NETWORK CONTROL CU
ANNUNCIATOR D	4 CONDUCTOR #18 FPL TWISTED/ UNSHIELDED W/OVERALL JACKET	4 CONDUCTOR #18 FPL TWISTED/ UNSHIELDED W/OVERALL JACKET	ANNUNCIATOR DU
AUDIBLE LOOP B	2 CONDUCTOR #18 FPL TWISTED/ SHIELDED W/OVERALL JACKET	2 CONDUCTOR #18 FPL TWISTED/ SHIELDED W/OVERALL JACKET	AUDIBLE LOOP BU
AUDIBLE/VISUAL (HORNS/STROBES) N	2 CONDUCTOR #12 FPL TWISTED/ SHIELDED W/OVERALL JACKET	2 CONDUCTOR #12 FPL TWISTED/ SHIELDED W/OVERALL JACKET	AUDIBLE/VISUAL (HORNS/STROBES) NU
S-BUS S	4 CONDUCTOR #16 FPLR (2 PAIR)	4 CONDUCTOR #16 FPLR (2 PAIR)	S-BUS SU

NOTE:
1. ALL WIRE TO BE CLASS 'B' PATHWAY SURVIVAL LEVEL 1.
2. ALL CABLING TO BE WEST PENN OR APPROVED EQUAL.
3. COLOR CODE ALL FIRE ALARM CONDUCTORS PER DISTRICT STANDARDS. VERIFY COLOR SCHEMES PRIOR TO ORDERING FIRE ALARM CONDUCTORS.

PLAN REVIEW REQUIREMENTS AND APPLICABLE CODES AND STANDARDS

1.0 FIRE ALARM PLAN REVIEW

A. FIRE ALARM PLAN REVIEW
1. AS PART OF THE FIRE ALARM PLAN REVIEW, PLANS AND SPECIFICATIONS FOR THE FIRE ALARM SYSTEM HAVE BEEN INCLUDED FOR REVIEW AND COMMENT BY THE STATE FIRE MARSHAL.
2. THE FLOOR PLANS AND SPECIFICATIONS INCLUDE THE FOLLOWING : LOCATIONS OF ALL ALARM-INITIATING AND SIGNALING DEVICES, CONTROL AND TROUBLE SIGNALING EQUIPMENT (FIRE ALARM CONTROL PANEL, BUILDING ANNUNCIATION (FIRE ALARM ANNUNCIATOR).

B. FIRE ALARM COMPONENTS
1. PROVIDE CALIFORNIA STATE FIRE MARSHAL LISTING SHEETS AND U.L. LISTING NUMBERS FOR EACH COMPONENT.
2. EQUIPMENT POWER CONNECTIONS.
3. RISER DIAGRAM SHOWING EACH COMPONENT.
4. VOLTAGE DROP CALCULATIONS.
5. POWER CONNECTIONS TO APPLICABLE COMPONENTS.
6. WIRE AND/OR CABLING TYPES AND SIZES.
7. PROVIDE CATALOG DATA SHEETS FOR ALL FIRE ALARM SYSTEM COMPONENTS.
8. CONTRACTOR TO FURNISH STATEMENT OF COMPLIANCE BEFORE REQUESTING FINAL APPROVAL OF INSTALLATION IN ACCORDANCE WITH CFC, SECTION 901.2.1.
9. A SATISFACTORY TEST OF THE ENTIRE SYSTEM SHALL BE MADE IN THE PRESENCE OF THE PROJECT INSPECTOR AND, IF APPLICABLE, STATE FIRE AUTHORITY.
10. THE INSTALLER SHALL SUPPLY THE OWNER WITH A WRITTEN OPERATING, TESTING AND MAINTENANCE INSTRUCTIONS, POINT-TO-POINT AS BUILT DRAWINGS AND EQUIPMENT SPECIFICATIONS. AS BUILT RECORDS SHALL BE MAINTAINED ON PREMISES FOR A MINIMUM OF THREE YEARS PER CFC, SECTION 901.6.3.

C. SCOPE OF WORK
1. INSTALL A MANUAL, ADDRESSABLE, FIRE ALARM SYSTEM WITHIN ALL BUILDINGS IN SCOPE OF PROJECT (LISTED BELOW) AS DEFINED PER CFC, SECTION 907.2 AND NFPA 72.

ADMINISTRATION	3,529 SQ.FT
COMET	3,233 SQ.FT
MEN'S HOUSING	(3) AT 3,005 SQ.FT. EACH
WOMEN'S HOUSING	(3) AT 3,005 SQ.FT. EACH
EDUCATION	6,155 SQ.FT
MULTI-PURPOSE	16,244 SQ.FT
RECREATION	5,834 SQ.FT
WAREHOUSE	13,703 SQ.FT

2. FIRE ALARM SYSTEM SHALL TRANSMIT THE ALARM, SUPERVISORY AND TROUBLE SIGNALS TO AN APPROVED SUPERVISING STATION IN ACCORDANCE WITH NFPA 72. THE SUPERVISING STATION SHALL BE U.L. LISTED AS UUFX (CENTRAL STATION) PER CFC, SECTION 907.6.6.3.
3. FIRE SPRINKLER SYSTEM UTILIZED FOR HEAT DETECTION IN ALL ABOVE CEILING, ATTIC SPACES AND CONCEALED COMBUSTIBLE AREAS. PROVIDE HEAT DETECTORS WHERE FIRE SPRINKLERS HAVE BEEN OMITTED PER NFPA 72 AND NFPA 13.

2.0 LIST OF CURRENT CALIFORNIA CODE OF REGULATIONS

APPLICABLE CODES AS OF January 1, 2020
- 2019 California Administrative Code, Title 24 C.C.R.
- 2019 California Building Code (CBC), Title 24 C.C.R. (2018 International Building Code of the International Code Council, with California Amendments.)
- 2019 California Electrical Code (CEC), Title 24, C.C.R. (2017 National Electric Code of the National FIre Protection Assoc., NFPA)
- 2019 California Mechanical Code (CMC), Title 24, C.C.R. (2018 Uniform Mechanical Code of the International Association of Plumbing and Mechanical Officials, IAPMO.)
- 2019 California Plumbing Code (CPC), Part 5, Title 24, C.C.R. (2018 Uniform Plumbing Code of the International Association of Plumbing and Mechanical Officials, IAPMO.)
- 2019 California Energy Code (CEC), Title 24, C.C.R.
- 2019 California Historical Building Code, Title 24, C.C.R.
- 2019 California Fire Code (CFC), Title 24, C.C.R. (2018 International Fire Code of the International Code Council)
- 2019 California Existing Building Code, Title 24, C.C.R. (2018 International Existing Building Code of the International Code Council, with amendments)
- 2019 California Green Building Standards Code (CALGreen Code), Title 24, C.C.R.
- 2019 California Referenced Standards Code, Title 24, C.C.R.

LIST OF FEDERAL CODES AND STANDARDS (if applicable)
- Americans with Disabilities Act (ADA), Title II or Title III
  - For Title II: Uniform Federal Accessibility Standards (UFAS) or ADA Standards for Accessible Design (Appendix A of 28 CFR Part 36.)
  - For Title III: ADA Standards for Accessible Design (Appendix A of 28 CFR Part 36.)
- Americans with Disabilties Act Accessibility Guidelines (ADAAG) (with amendments through September 2002)

PARTIAL LIST OF APPLICABLE NFPA STANDARDS:

NFPA 13-Automatic Sprinkler Systems (CA Amended)	2016 Edition
NFPA 14-Standpipes Systems (CA Amended)	2016 Edition
NFPA 17-Standard for Dry Chemical Extinguishing Systems	2017 Edition
NFPA 17a-Standard for Wet Chemical Systems	2017 Edition
NFPA 20-Installation Stationary Pumps for Fire Protection	2016 Edition
NFPA 22-Water tanks for Private Fire Protection	2013 Edition
NFPA 24-Installation of Private Fire Service Mains (CA Amended)	2016 Edition
NFPA 72-National Fire Alarm and Signaling Code (CA Amended)	2016 Edition
NFPA 80-Fire Door and Other Opening Protectives	2016 Edition
NFPA 92-Standard for Smoke Control Systems	2015 Edition
NFPA 253-Critical Radiant Flux of Floor Covering Systems	2015 Edition
NFPA 720-Carbon Monoxide (CO) Detection and Warning	2015 Edition
NFPA 2001-Clean Agent Fire Extinguishing Systems (CA Amended)	2015 Edition
ICC 300 -ICC Standards on Bleachers, Folding and Telescoping Seating and Grandstands	2017 Edition
UL 38-Manual Operating Signal Boxes (with revisions through February 2, 2005 as amended)	1999 Edition
UL 268-Smoke Detectors for Fire Alarm Systems	2009 Edition
UL 268A-Smoke Detectors Duct Applications (with revisions through October 22, 2003 as amended)	2009 Edition
UL 300-Fire Testing of Fire Extinguishing Systems for Protection Of Restaurant Cooking Areas (with revisions through December 2014 as amended)	2005 Edition
UL 464-Audibile Signal Appliances (with revisions through October 10, 2003 as amended)	2003 Edition
UL 521-Heat Detectors for Fire Protective Signaling Systems (with revisions through July 20, 2005 as amended)	1999 Edition
UL 864-Control Units for Fire Protective Signaling Systems (with revisions through December 2014)	2003 Edition

Reference code section for NFPA Standards-2019 CBC (SFM) Chapter 35
See Chapter 35 for State of California amendments to NFPA Standards.

COMPLETE FIRE ALARM SUBMITTAL

MANUAL ADDRESSABLE FIRE ALARM SYSTEM

IDENTIFICATION STAMP
DIV. OF THE STATE ARCHITECT
APP: 02-118630 INC:
REVIEWED FOR
SS ☐ FLS ☐ ACS ☑
DATE: 04/13/2021

OFFICE OF THE STATE FIRE MARSHAL
APPROVED FIRE AND PANIC ONLY
Approval of this plan does not authorize or approve any omission or deviation from applicable regulations. Final approval is subject to field inspection. One set of approved plans shall be available on the project site at all times.
PERMIT NO.: 20-N-2332-CP
REVIEWED BY: LITO CATAYLO, OSFM
DATE: 4/ 1 /2021

GENERAL SERVICES
Department of General Services
State of California
Real Estate Services Division
Project Management & Development Branch
707 Third Street, Suite 4-105
West Sacramento, California 95605

NICHOLS MELBURG & ROSSETTO
ARCHITECTS + ENGINEERS
300 Knollcrest Drive
Redding, CA. 96002
(530) 222-3300 (530) 222-3538 FAX
http://www.nmrdesign.com

Copyright © 2019
All ideas, designs, arrangements and plans indicated or represented by this drawing are owned by, and the property of, NICHOLS, MELBURG and ROSSETTO and were created, evolved and developed for use on, and in conjunction with, the specified project. None of such ideas, designs, arrangements or plans shall be used by, or disclosed to any person, firm or corporation for any purpose whatsoever without the written permission of NICHOLS, MELBURG and ROSSETTO.

LICENSE STAMPS
REGISTERED PROFESSIONAL ENGINEER
RAYMOND W. SWARTZ
No. E15610
Exp. 12/31/2021
ELECTRICAL
STATE OF CALIFORNIA
Date Signed: 3/25/2021

CONSULTANT
tk1sc
COLLABORATIVE
11870 Pierce Street, Suite 160
Riverside, California 92505
951.299.4160 www.tk1sc.com
Project Leader - Jerry Leonhardt
Electrical Lead - Reid Cordry
tk1sc Job #:2019-0228A

DRAWING STATUS
CONSTRUCTION DOCUMENTS

ISSUE

No.	Date	Description
1	10/20/2020	INITIAL PLAN REVIEW
2	01/22/2021	AGENCY RESUBMITTAL
3	03/22/2021	AGENCY RESUBMITTAL

If drawing is not 30" x 42" it is a reduced print

PROJECT
RESIDENTIAL CENTER, UKIAH: REPLACEMENT OF EXISTING RESIDENTIAL CENTER
440 EAST HILL ROAD
WILLITS, CALIFORNIA 95490
MENDOCINO COUNTY
CALIFORNIA CONSERVATION CORP

Supervisor	Designed	Drawn
		Author

DSA Application No.
02-118630

SHEET TITLE
FIRE ALARM SYMBOL LIST

DGS Project Number 000000000001826
NMR Project Number 18-6456

Reference North: NORTH
Sheet Scale
Sheet Number
FA001

ISSUE DATE
July 9, 2021

Plot Date: 3/23/2021 3:14:49 PM
File Name: BIM 360://CCC Willits Residential Center/E_CCC Willits_COMMON_2019-0228A.rvt

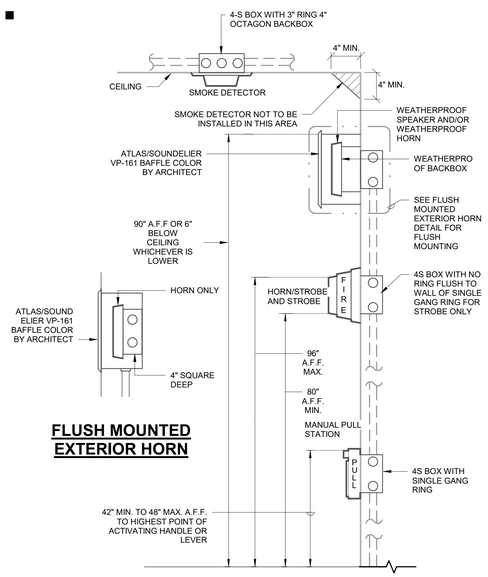

FLUSH MOUNTED EXTERIOR HORN

GENERAL NOTES:

1. THE ENTIRE LENS OF STROBE LIGHTS MUST BE BETWEEN 80" AND 96" ABOVE FLOOR FINISH. (2016 NFPA 72 18.5.5)
2. MANUAL FIRE ALARM BOXES SHALL BE INSTALLED IN ACCORDANCE WITH 2019 CFC SECTIONS 907.4 THROUGH 907.5.
3. WHEN APPLICABLE, MANUAL FIRE ALARM BOXES SHALL BE LOCATED NOT MORE THAN 5 FEET FROM THE ENTRANCE TO EACH EXIT. ADDITIONAL MANUAL FIRE ALARM BOXES SHALL BE LOCATED SO THAT TRAVEL DISTANCE TO THE NEAREST BOX DOES NOT EXCEED 200 FEET. (2019 CFC 907.4.2.1)

12 MOUNTING HEIGHT DETAIL

SCALE: NOT TO SCALE

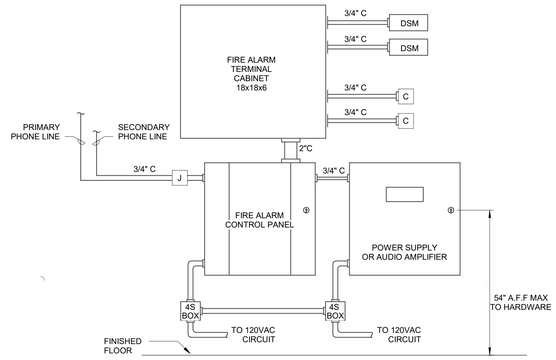

8 FIRE ALARM PANEL/POWER SUPPLY MOUNTING ELEV

SCALE: NOT TO SCALE

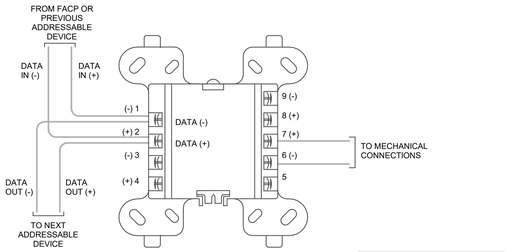

CONTROL MODULE WIRING

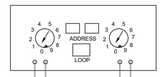

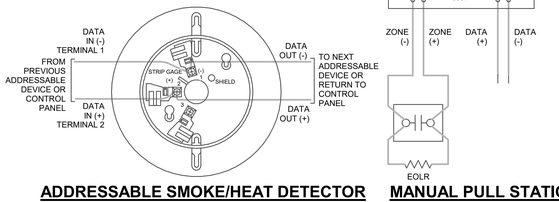

ADDRESSABLE SMOKE/HEAT DETECTOR **MANUAL PULL STATION**

9 DEVICE WIRING DETAILS

SCALE: NOT TO SCALE

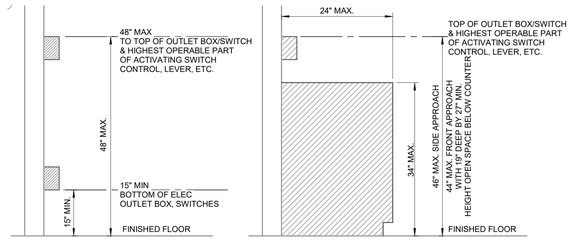

ALL DEVICE HEIGHTS DEPICTED SHALL BE MODIFIED AS REQUIRED BY GOVERNING BUILDING CODES. CONTRACTOR TO VERIFY/RECONCILE APPLICABLE CODE REQUIREMENTS AND ANY DEVICE HEIGHT REQUIREMENTS DEPICTED ON ARCHITECTURAL OR INTERIOR DESIGN PLANS & SPECIFICATIONS PRIOR TO DEVICE ROUGH-IN. CONFLICTS OR LACK OF MOUNTING HEIGHT SPECIFICITY ON THE ARCHITECTURAL OR INTERIOR DESIGN PLANS & SPECIFICATIONS SHALL BE CAUSE FOR THE CONTRACTOR TO ISSUE A FORMAL WRITTEN RFI FOR RESOLUTION. DEVICE MOUNTING HEIGHT CLARIFICATIONS/SPECIFICATIONS SHALL NOT RESULT IN AN ADDITIONAL COST TO THE OWNER - CONTRACTOR SHALL INCLUDE ALL COSTS IN BASE BID.

10 MOUNTING HEIGHT OVER OBSTRUCTION DETAIL

SCALE: NOT TO SCALE

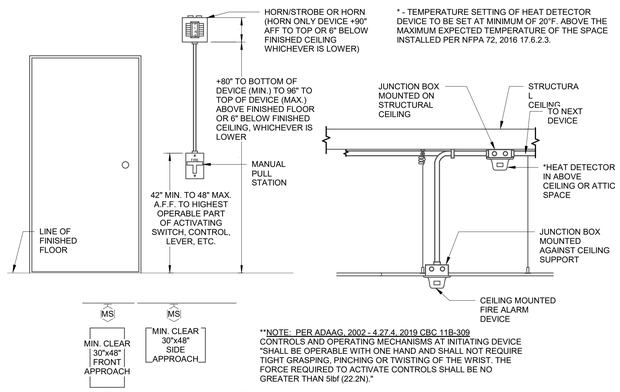

* - TEMPERATURE SETTING OF HEAT DETECTOR DEVICE TO BE SET AT MINIMUM OF 20°F. ABOVE THE MAXIMUM EXPECTED TEMPERATURE OF THE SPACE INSTALLED PER NFPA 72, 2016 17.6.2.3.

**NOTE: PER ADAAG, 2002 - 4.27.4, 2019 CBC 11B-309 CONTROLS AND OPERATING MECHANISMS AT INITIATING DEVICE "SHALL BE OPERABLE WITH ONE HAND AND SHALL NOT REQUIRE TIGHT GRASPING, PINCHING OR TWISTING OF THE WRIST. THE FORCE REQUIRED TO ACTIVATE CONTROLS SHALL BE NO GREATER THAN 5lbf (22.2N)."

11 DEVICE MOUNTING DETAILS

SCALE: NOT TO SCALE

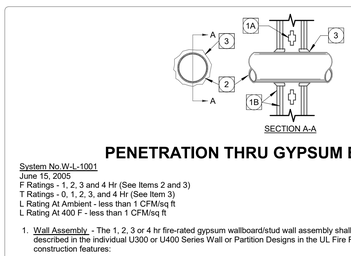

PENETRATION THRU GYPSUM BOARD WALL

System No.W-L-1001
June 15, 2005
F Ratings - 1, 2, 3 and 4 Hr (See Items 2 and 3)
T Ratings - 0, 1, 2, 3, and 4 Hr (See Item 3)
L Rating At Ambient - less than 1 CFM/sq ft
L Rating At 400 F - less than 1 CFM/sq ft

1. Wall Assembly - The 1, 2, 3 or 4 hr fire-rated gypsum wallboard/stud wall assembly shall be constructed of the materials and in the manner described in the individual U300 or U400 Series Wall or Partition Designs in the UL Fire Resistance Directory and shall include the following construction features:

   A. Studs - Wall framing may consist of either wood studs (max 2 hr fire rated assemblies) or steel channel studs. Wood studs to consist of nom 2 by 4 in. (51 by 102 mm) lumber spaced 16 in. (406 mm) OC with nom 2 by 4 in. (51 by 102 mm) lumber end plates and cross braces. Steel studs to be min 3-5/8 in. (92 mm) wide by 1-3/8 in. (35 mm) deep channels spaced max 24 in. (610 mm) OC.

   B. Gypsum Board * - Nom 1/2 or 5/8 in. (13 or 16 mm) thick, 4 ft. (122 cm) wide with square or tapered edges. The gypsum wallboard type, thickness, number of layers, fastener type and sheet orientation shall be as specified in the individual U300 or U400 Series Design in the UL Fire Resistance Directory. Max diam of opening is 26 in. (660 mm).

2. Through Penetrant - One metallic pipe, conduit or tubing installed either concentrically or eccentrically within the firestop system. The annular space between pipe, conduit or tubing and periphery of opening shall be min of 0 in. (0 mm) (point contact) to max 2 in. (51 mm). Pipe, conduit or tubing to be rigidly supported on both sides of wall assembly. The following types and sizes of metallic pipes, conduits or tubing may be used:

   A. Steel Pipe - Nom 24 in. (610 mm) diam (or smaller) Schedule 10 (or heavier) steel pipe.

   B. Iron Pipe - Nom 24 in. (610 mm) diam (or smaller) service weight (or heavier) cast iron soil pipe, nom 12 in. (305 mm) diam (or smaller) or Class 50 (or heavier) ductile iron pressure pipe.

   C. Conduit - Nom 6 in. (152 mm) diam (or smaller) steel conduit or nom 4 in. (102 mm) diam (or smaller) steel electrical metallic tubing

   D. Copper Tubing - Nom 6 in. (152 mm) diam (or smaller) Type L (or heavier) copper tubing

   E. Copper Pipe - Nom 6 in. (152 mm) diam (or smaller) Regular (or heavier) copper pipe.

   F. Through Penetrating Product* - Flexible Metal Piping - The following types of steel flexible metal gas piping may be used:

      1. Nom 2 in. (51 mm) diam (or smaller) steel flexible metal gas piping. Plastic covering on piping may or may not be removed on both sides of floor or wall assembly.
         OMEGA FLEX INC
      2. Nom 1 in. (25 mm) diam (or smaller) steel flexible metal gas piping. Plastic covering on piping may or may not be removed on both sides of floor or wall assembly.
         GASTITE, DIV OF TITEFLEX
      3. Nom 1 in. (25 mm) diam (or smaller) steel flexible metal gas piping. Plastic covering on piping may or may not be removed on both sides of floor or wall assembly.
         WARD MFG LLC

3. Fill, Void or Cavity Material * - Caulk or Sealant - Min 5/8. 1-1/4,1-7/8 and 2-1/2 in. (16, 32, 48 and 64 mm) thickness of caulk for 1, 2, 3 and 4 hr rated assemblies, respectively, applied within annulus, flush with both surfaces of wall. Min 1/4 in. (6 mm) diam bead of caulk applied to gypsum board/penetrant interface at point contact location on both sides of wall. The hourly F Rating of the firestop system is dependent upon the hourly fire rating of the wall assembly in which it is installed, as shown in the following table.
   The hourly T Rating of the firestop system is dependent upon the type or size of the pipe or conduit and the hourly fire rating of the wall assembly in which it is installed, as tabulated below:

MAX PIPE OR CONDUIT DIAM. IN	ANULAR SPACE IN	F RATING HR	T RATING HR
1 (25)	0 TO 3/16	1 OR 2	O+, 1 OR 2
1 (25)	1/4 TO 1/2	3 OR 4	3 OR 4
4 (102)	O TO 1/4	1 OR 2	0
6 (152)	1/4 TO 1/2	3 OR 4	0
12 (305)	3/16 TO 3/8	1 OR 2	0

+When copper pipe is used, T Rating is 0 hr.

3M COMPANY - CP 25WB+ or FB-3000 WT

*Bearing the UL Classification Marking

1 THROUGH RATED WALL OR FLOOR PENETRATIONS (U.L. LISTINGS)

SCALE: NOT TO SCALE

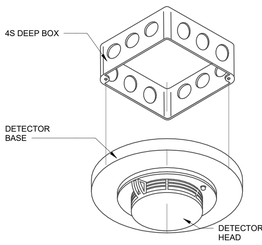

5 DETECTOR MOUNTING DETAIL

SCALE: NOT TO SCALE

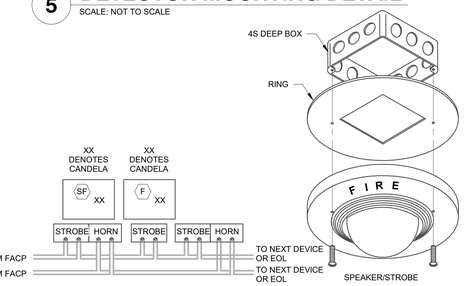

6 CEILING MTD. AUDIBLE/VISUAL

SCALE: NOT TO SCALE

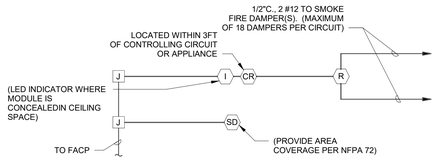

(AREA COVERAGE)

Note:
PER CMC 605.8, When the automatic activation of a smoke damper or a combination smoke-fire damper occurs, the HVAC system serving such dampers shall immediately shut down. ALL HVAC UNITS CONTAINING COMBINATION SMOKE FIRE DAMPERS AS PART OF THEIR DUCTING SYSTEM SHALL BE PROVIDED WITH SHUNT RELAYS AND DEVICES FOR IMMEDIATE SHUT DOWN UPON THE ACTIVATION / CLOSURE OF ASSOCIATED COMBINATION SMOKE FIRE DAMPERS.

7 SMOKE/FIRE DAMPER SCHEMATIC

SCALE: NOT TO SCALE

SECTION A-A

PENETRATION THRU CONCRETE WALL OR FLOOR

System No. C-AJ-1044
March 15, 2007
F Ratings - 2, 3, and 4 Hr (See Items 2A and 4)
T Rating - 0 Hr
L Rating At Ambient - 2 CFM/sq ft
L Rating At 400 F - less than 1 CFM/sq ft
W Rating - Class I (See Item 4)

1. Floor or Wall Assembly - Lightweight or normal weight (100-150 pcf or 1600-2400 kg/m3) concrete. Except as noted in table under Item 4, min thickness of solid concrete floor or wall assembly is 4-1/2 in. (114 mm). Floor may also be constructed of any min 6 in. (152 mm) thick UL Classified hollow core Precast Concrete Units*. When floor is constructed of hollow core precast concrete units, packing material (Item 3) and caulk fill material (Item 4) to be installed symmetrically on both sides of floor, flush with floor surface. Wall assembly may also be constructed of any UL Classified Concrete Blocks*. Max diam of opening is in solid lightweight or normal weight concrete. Floor is 32 in. (813 mm). Max diam of opening in floor constructed of hollow-core precast concrete units is 7 in. (178 mm).

   See Concrete Blocks (CAZT) and Precast Concrete Units (CFTV) categories in the Fire Resistance Directory for names of manufacturers.

1A. Steel Sleeve - (Optional, not shown) - Max 15 in. (381 mm) ID (or smaller) Schedule 10 (or heavier) steel sleeve cast or grouted into floor or wall assembly. Sleeve may extend a max of 2 in. (51 mm) above top of floor or beyond either surface of wall. Max 16 in. (406 mm) ID (or smaller) min 0.028 (0.71 mm) wall thickness (or heavier) galvanized steel sleeve cast or grouted into floor or wall assembly. Sleeve may extend a max of 1/2 in. (13 mm) beyond either surface of floor or wall.

2. Through Penetrants - One metallic pipe, conduit or tubing to be installed either concentrically or eccentrically within the firestop system. Max annular space between pipe, conduit or tubing and edge of through opening or sleeve is dependent on the parameters shown in Item 4. Min annular space between pipe or conduit and edge of through opening is 0 in. (0 mm) (point contact). Pipe conduit or tubing to be rigidly supported on both sides of floor or wall assembly. The following types and sizes of metallic pipes, conduits or tubing may be used:

   A. Steel Pipe - Nom 30 in. (762 mm) diam (or smaller) Schedule 10 (or heavier) steel pipe.

   B. Iron Pipe - Nom 30 in. (762 mm) diam (or smaller) cast or ductile iron pipe.

   C. Conduit - Nom 6 in. (152 mm) diam (or smaller) rigid steel conduit.

   D. Conduit - Nom 4 in. (102 mm) diam (or smaller) steel electrical metallic tubing.

   E. Copper - Tubing Nom 6 in. (152 mm) diam (or smaller) Type L (or heavier) copper tube.

   F. Copper Pipe - Nom 6 in. (152 mm) diam (or smaller) Regular (or heavier) copper pipe.

3. Packing Material - Polyethylene backer rod or nom 1 in. (25 mm) thickness of tightly-packed mineral wool batt or glass fiber insulation firmly packed into opening as a permanent form. Packing material to be recessed from top surface of floor or from both surfaces of wall as required to accommodate the required thickness of caulk fill material (Item 4).

3A. Forming Material* - As an alternate to the packing material in Item 3, nom 4in. (102mm) wide strips of min 1/2 in (13mm) thick compressible mat to be stacked to a thickness greater than the width of the annular space and compression-fitted, edge-first, to fill the annular space to a min 4in. (102mm) depth. As an option, the strips of a min 1/2 in (13mm) thick compressible mat may be folded in half, lengthwise, and stacked to a thickness greater than the width of the annular space and compression fitted, edge-first, to fill the annular space to a min 2 in. (51mm) depth. Top of forming material to be recessed from top surface of floor or from both surfaces of wall as necessary to accommodate the required thickness of caulk fill material.

   3M COMPANY - Fire Barrier Packing Material

4. Fill,Void or Cavity Material* - Caulk or Sealant - Applied to fill the annular space flush with top surface of floor. In wall assemblies, required caulk thickness to be installed symmetrically on both sides of wall, flush with wall surface. At point contact location between penetrant and sleeve or between penetrant and concrete, a min 1/4 in. (6 mm) diam bead of caulk shall be applied at top surface of floor and at both surfaces of wall. The hourly F Ratings and the min required caulk thicknesses are dependent upon a number of parameters, as shown in the following table:

	MAX FLOOR OR WALL THKNS. IN.	NOM PIPE TUBE OR CONDIT DIAM. IN.	MAX ANNULAR SPACE IN.	MIN CAULK THKNS IN.	F RATING HR
(a) Min 2 in. (51 mm) thickness of mineral wool batt insulation required in annular space.	2-1/2(64)	1/2-12(13-305)	1-3/8(35)	1/2(13)	2
	2-1/2(64)	1/2-12(13-305)	3-1/4(83)	1(25)	2
(b) Min 1 in. (25 mm) thickness of mineral wool batt insulation required in annular space on both sides of floor or wall assembly. Min 1 in. (25 mm) thickness of caulk to be installed flush with each surface of floor or wall assembly.	4-1/2(114)	1/2-6(13-152)	1-3/8(35)	1/4(6)(a)	2
	4-1/2(114)	1/2-12(13-305)	1-1/4(32)	1/2(13)	3
	4-1/2(114)	1/2-20(13-508)	2(51)	1(25)	3
3M COMPANY - CP 25WB+ caulk or FB-3000 WT sealant. (Note: W Rating applies only when FB-3000 WT sealant is used.)	4-1/2(114)	1/2-20(13-508)	2(51)	1(25)	3
	4-1/2(114)	1/2-12(13-305)	3-1/4(83)	1(25)	3
	4-1/2(114)	22-30(558-762)	2(51)	1(25)	3
	5-1/2(140)	1/2-6(13-152)	1-3/8(35)	1(25)(b)	4

*Bearing the UL Classification Marking

2 PULL STATION DETAIL

SCALE: NOT TO SCALE

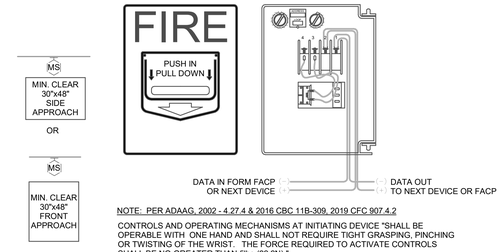

NOTE: PER ADAAG, 2002 - 4.27.4 & 2016 CBC 11B-309, 2019 CFC 907.4.2

CONTROLS AND OPERATING MECHANISMS AT INITIATING DEVICE "SHALL BE OPERABLE WITH ONE HAND AND SHALL NOT REQUIRE TIGHT GRASPING, PINCHING OR TWISTING OF THE WRIST. THE FORCE REQUIRED TO ACTIVATE CONTROLS SHALL BE NO GREATER THAN 5lbs (22.2N)."

3 HVAC UNIT SHUT DOWN SCHEMATIC

SCALE: NOT TO SCALE

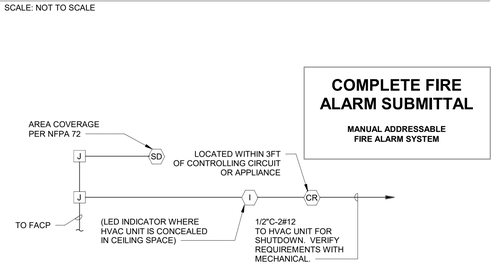

4 SPRINKLER SYSTEM CONNECTION SCHEMATIC

SCALE: NOT TO SCALE

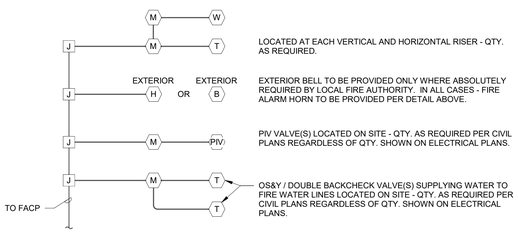

IDENTIFICATION STAMP
DIV. OF THE STATE ARCHITECT
APP: 02-118630 INC:
REVIEWED FOR
SS ☐ FLS ☐ ACS ☑
DATE: 04/13/2021

OFFICE OF THE STATE FIRE MARSHAL
APPROVED FIRE AND PANIC ONLY
Approval of this plan does not authorize or approve any omission or deviation from applicable regulations. Final approval is subject to field inspection. One set of approved plans shall be available on the project site at all times.
PERMIT NO: 20-N-2332-CP
REVIEWED BY: LEO CATAYLO, OSFM
DATE: 4/1/2021

GENERAL SERVICES
Department of General Services
State of California
Real Estate Services Division
Project Management & Development Branch
707 Third Street, Suite 4-105
West Sacramento, California 95605

NICHOLS MELBURG & ROSSETTO ARCHITECTS + ENGINEERS
300 Knollcrest Drive
Redding, CA. 96002
(530) 222-3300 (530) 222-3538 FAX
http://www.nmrdesign.com

Copyright © 2019
All ideas, designs, arrangements and plans indicated or represented by this drawing are owned by, and the property of, NICHOLS, MELBURG and ROSSETTO and were created, evolved and developed for use on, and in conjunction with, the specified project. None of such ideas, designs, arrangements or plans shall be used by, or disclosed to any person, firm or corporation for any purpose whatsoever without the written permission of NICHOLS, MELBURG and ROSSETTO.

LICENSE STAMPS

REGISTERED PROFESSIONAL ENGINEER RAYMOND W. SWAYZE No. E15610 12/31/2021 MECHANICAL STATE OF CALIFORNIA
Date Signed 3/25/2021

CONSULTANT
tklsc COLLABORATIVE
11870 Pierce Street, Suite 160
Riverside, California 92505
951.299.4160 www.tk1sc.com
Project Leader - Jerry Leonhardt
Electrical Lead - Reid Cordry
tk1sc Job #:2019-0228A

DRAWING STATUS
CONSTRUCTION DOCUMENTS

ISSUE

No.	Date	Description
1	10/20/2020	INITIAL PLAN REVIEW
2	01/22/2021	AGENCY RESUBMITTAL
3	03/22/2021	AGENCY RESUBMITTAL

If drawing is not 30" x 42" it is a reduced print

PROJECT
RESIDENTIAL CENTER, UKIAH: REPLACEMENT OF EXISTING RESIDENTIAL CENTER
440 EAST HILL ROAD
WILLITS, CALIFORNIA 95490
MENDOCINO COUNTY
CALIFORNIA CONSERVATION CORP

Supervisor	Designed	Drawn
		Author

DSA Application No.
02-118630

SHEET TITLE
FIRE ALARM DETAILS

DGS Project Number: 0000000000001826
NMR Project Number: 18-6456
Reference North
Sheet Scale: 12" = 1'-0"
Sheet Number: FA002
ISSUE DATE: July 9, 2021

Plot Date: 3/22/2021 3:14:57 PM
File Name: BIM 360:/CCC Willits Residential Center/E_CCC Willits_COMMON_2019-0228A.rvt

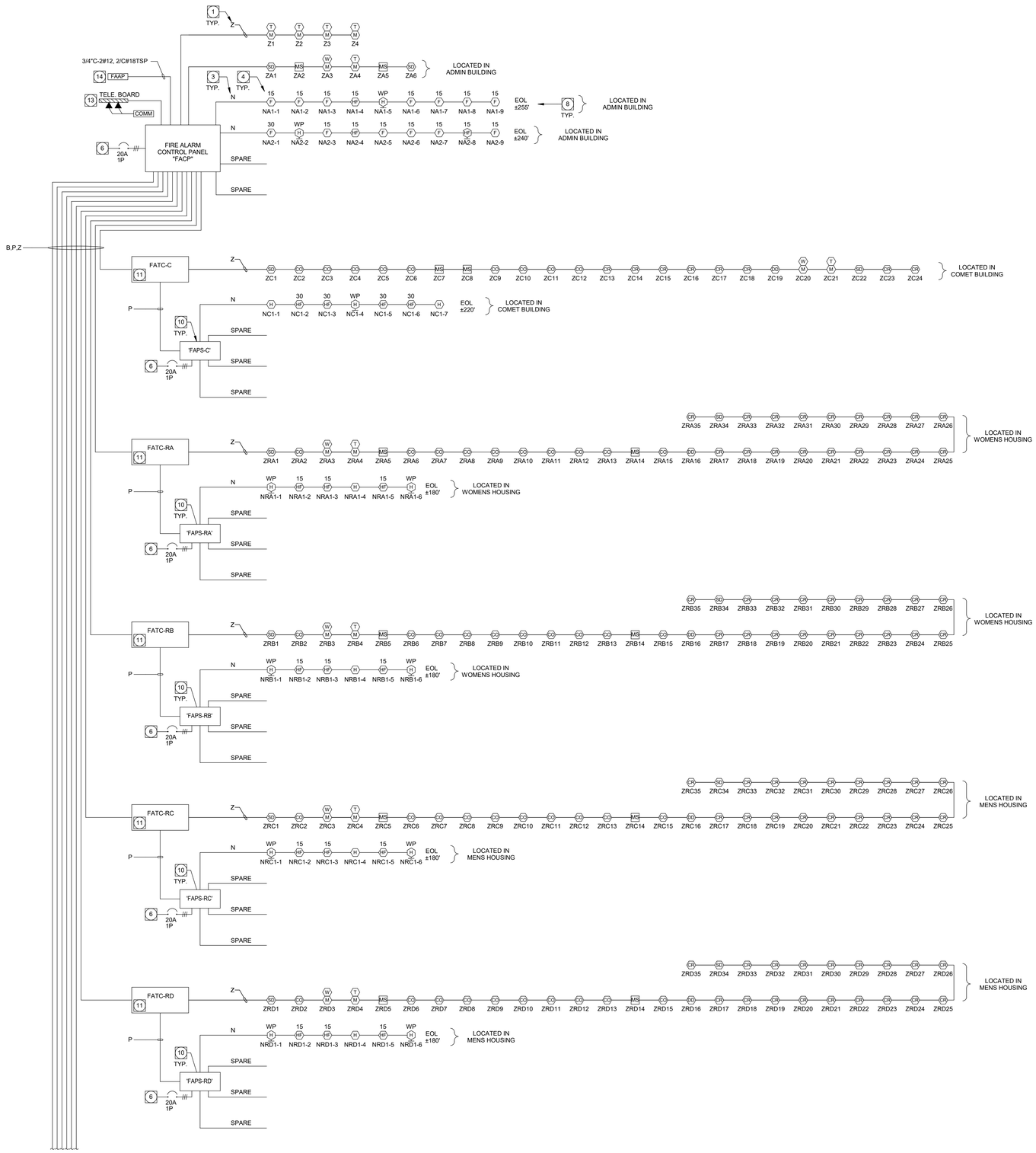

RISER DIAGRAM SPECIFIC NOTES:

1. 'Z' INDICATES ZONABLE/ADDRESSABLE CIRCUIT, PROVIDE 2#18 TWISTED PAIR PER CIRCUIT. SEE WIRE LEGEND FOR ADDITIONAL INFORMATION.
2. 'A' INDICATES AUDIBLE SPEAKER CIRCUIT, SEE WIRE LEGEND FOR ADDITIONAL INFORMATION.
3. N - VISUAL/AUDIBLE CIRCUIT NUMBER, PROVIDE 2#12 PER CIRCUIT, TYPICAL
4. NUMBER INDICATES CANDELA RATING OF STROBE DEVICE.
5. INDICATES WATTAGE FOR SPEAKER.
6. PROVIDE 3/4"C. WITH 2#12, 1#12 GRD. TO 120V DEDICATED CIRCUIT FOR POWER. PROVIDE 20AMP, 1-POLE CIRCUIT BREAKER WITH APPROVED LOCK-ON DEVICE, RED INDICATOR AND IDENTIFIED AS "FIRE ALARM CONTROL CIRCUIT" (NFPA 72, 10.5.6.2). CONNECT AS REQUIRED. PROVIDE ALL REQUIRED MOUNTING HARDWARE. MATCH A.I.C. RATING OF DEVICES USED.
7. FIRE ALARM DIGITAL AUDIO AMPLIFIER (AMP). SEE SYMBOL LIST FOR ADDITIONAL INFORMATION.
8. INDICATES LENGTH OF WIRE IN FEET. SEE WIRING DIAGRAM FOR WIRE TYPES. SEE VOLTAGE DROP CALCULATIONS FOR PERCENT DROPPED AND ADDITIONAL INFORMATION.
9. CONNECT AS REQUIRED TO HVAC UNIT FOR UNIT SHUT-DOWN. REFER TO DETAIL 3, SHEET FA002 FOR ADDITIONAL REQUIREMENTS.
10. FIRE ALARM POWER SUPPLY (FAPS), PROVIDE DEDICATED 120V CIRCUIT WITH RED INDICATOR AND APPROVED LOCK-ON DEVICE PER PLANS.
11. FIRE ALARM TERMINAL CABINET (FATC).
12. NOT USED
13. PROVIDE (2) DEDICATED PHONE LINES (LAND LINES) FOR FIRE ALARM SYSTEM MONITORING. CONTRACTOR TO SUPPLY UDACT (UNIVERSAL DIGITAL ALARM COMMUNICATOR TRANSMITTER) WHEN NOT SUPPLIED WITH CONTROL PANEL.
14. CFC907.6.4.1 COMPLIANT FIRE ALARM ANNUNCIATOR PANEL (FAAP), VERIFY WITH DISTRICT REPRESENTATIVE, A.H.J. AND ARCHITECT FOR EXACT LOCATION

FIRE ALARM GENERAL NOTES:

1. NOTIFICATION DEVICES IN ROOMS CONTAINING (2) OR MORE AUDIBLE AND/OR (2) OR MORE VISUAL DEVICES SHALL BE SYNCHRONIZED PER N.F.P.A. 72, 2016 EDITION (WITH CALIFORNIA AMENDMENTS) THIS SHALL INCLUDE AUDIBLE AND VISUAL DEVICES LOCATED IN ADJACENT/ADJOINING SPACES.
2. DO NOT DEVIATE FROM CONDUIT RUNS AS SHOWN ON FLOOR PLANS WITHOUT PRIOR APPROVAL FROM SYSTEM SUPPLIER / ENGINEER. FACTORS SUCH AS EXCESSIVE VOLTAGE DROP, ADDITIONAL PARTS, ENGINEERING, ETC. THAT ARE A RESULT OF CONDUIT RUN DEVIATIONS SHALL BE THE SOLE RESPONSIBILITY OF THE CONTRACTOR.
3. DETECTORS SHALL NOT BE LOCATED IN A DIRECT AIR-FLOW, NOR CLOSER THAN 3 FEET (915 mm) FROM ANY AIR SUPPLY DIFFUSER.
4. THE AUDIBLE ALARM NOTIFICATION APPLIANCES SHALL PROVIDE A SOUND PRESSURE LEVEL OF 15 dBA ABOVE THE AVERAGE AMBIENT SOUND LEVEL OR 5 dBA ABOVE THE MAXIMUM SOUND LEVEL HAVING DURATION OF AT LEAST 60 SECONDS, WHICH IS GREATER, IN EVERY OCCUPIED SPACE WITHIN THE BUILDING. THE MINIMUM SOUND PRESSURE LEVEL SHALL BE 60 dBA PER CFC 907.10.2.
5. THE FIRE ALARM EVACUATION SIGNAL SHALL BE THE STANDARD THREE-PULSE TEMPORAL PATTERN PER THE "EXCEPTION" OF THE 2019 CALIFORNIA BUILDING CODE 907.5.2.1.3 ANSI S3.41.
6. THE EXISTING CAMPUS FIRE ALARM SYSTEM SHALL BE MAINTAINED AND OPERATIONAL AT ALL TIMES DURING ALTERATIONS AND CONSTRUCTION. WHEN PORTIONS OF THE SYSTEM REQUIRE ALTERATIONS, THE REMAINDER OF THE SYSTEM SHALL BE KEPT IN SERVICE. IF NECESSARY TO SHUT DOWN ENTIRE FIRE ALARM SYSTEM, CONTRACTOR SHALL PROVIDE A FIRE WATCH FOR ALL OCCUPIED AREAS OF WORK WHERE THE REQUIRED FIRE ALARM SYSTEM IS OUT OF SERVICE FOR THE DURATION OF THE SYSTEM OUTAGE. FIRE WATCH AND SYSTEM/EQUIPMENT IDENTIFICATIONS SHALL BE PER 2016 CFC 901.7. LOCAL FIRE AUTHORITY SHALL BE NOTIFIED 48 HOURS IN ADVANCE OF ANY SHUT DOWN.
7. EMERGENCY VOICE/ALARM COMMUNICATION SYSTEMS SHALL BE DESIGNED AND INSTALLED IN ACCORDANCE WITH NFPA 72. THE OPERATION OF ANY AUTOMATIC FIRE DETECTOR, SPRINKLER WATERFLOW DEVICE OR MANUAL FIRE ALARM BOX SHALL AUTOMATICALLY SOUND AN ALERT TONE FOLLOWED BY VOICE INSTRUCTIONS GIVING APPROVED INFORMATION AND DIRECTIONS FOR A GENERAL OR STAGED EVACUATION IN ACCORDANCE WITH THE FIRE SAFETY EVACUATION PLANS REQUIRED BY SECTION 404 PER CBC/CFC 907.5.2.2
8. EMERGENCY VOICE/ALARM COMMUNICATION SYSTEMS SHALL HAVE THE CAPABILITY TO BROADCAST LIVE VOICE MESSAGES BY PAGING ZONES ON A SELECTIVE AND ALL-CALL BASIS PER CBC/CFC 907.5.2.2.2.
9. EMERGENCY VOICE/ALARM COMMUNICATION SYSTEMS SHALL BE PROVIDED WITH AN APPROVED EMERGENCY POWER SOURCE PER CBC/CFC 907.5.2.2.5.

COMPLETE FIRE ALARM SUBMITTAL

MANUAL ADDRESSABLE FIRE ALARM SYSTEM

IDENTIFICATION STAMP
DIV. OF THE STATE ARCHITECT
APP: 02-118630 INC:
REVIEWED FOR
SS ☐ FLS ☐ ACS ☑
DATE: 04/13/2021

OFFICE OF THE STATE FIRE MARSHAL
APPROVED FIRE AND PANIC ONLY
Approval of this plan does not authorize or approve any omission or deviation from applicable regulations. Final approval is subject to field inspection. One set of approved plans shall be available on the project site at all times.
PERMIT NO.: 20-N-2332-CP
REVIEWED BY: LEO CATAYLO, OSFM
DATE: 4/ /2021

GENERAL SERVICES
Department of General Services
State of California
Real Estate Services Division
Project Management & Development Branch
707 Third Street, Suite 4-105
West Sacramento, California 95605

NICHOLS MELBURG & ROSSETTO
ARCHITECTS + ENGINEERS
300 Knollcrest Drive
Redding, CA. 96002
(530) 222-3300 (530) 222-3538 FAX
http://www.nmrdesign.com

Copyright © 2019
All ideas, designs, arrangements and plans indicated or represented by this drawing are owned by, and the property of, NICHOLS, MELBURG and ROSSETTO and were created, evolved and developed for use on, and in connection with, the specified project. None of such ideas, designs, arrangements or plans shall be used by, or disclosed to any person, firm or corporation for any purpose whatsoever without the written permission of NICHOLS, MELBURG and ROSSETTO.

LICENSE STAMPS

REGISTERED PROFESSIONAL ENGINEER RAYMOND W. SWIFT No. E15610 12/31/2021 ELECTRICAL STATE OF CALIFORNIA
Date Signed: 3/25/2021

CONSULTANT
tk1sc COLLABORATIVE
11870 Pierce Street, Suite 160
Riverside, California 92505
951.299.4160 www.tk1sc.com
Project Leader - Jerry Leonhardt
Electrical Lead - Reid Cordry
tk1sc Job #:2019-0228A

DRAWING STATUS
CONSTRUCTION DOCUMENTS

ISSUE

No.	Date	Description
1	10/20/2020	INITIAL PLAN REVIEW
2	01/22/2021	AGENCY RESUBMITTAL
3	03/22/2021	AGENCY RESUBMITTAL

If drawing is not 30" x 42" it is a reduced print

PROJECT
RESIDENTIAL CENTER, UKIAH: REPLACEMENT OF EXISTING RESIDENTIAL CENTER
440 EAST HILL ROAD
WILLITS, CALIFORNIA 95490
MENDOCINO COUNTY
CALIFORNIA CONSERVATION CORP

Supervisor	Designed	Drawn
		Author

DSA Application No.
02-118630

SHEET TITLE
FIRE ALARM RISER DIAGRAM

DGS Project Number: 0000000000001826
NMR Project Number: 18-6456

Reference North
Sheet Scale
Sheet Number: FA010

ISSUE DATE
July 9, 2021

Plot Date: 3/23/2021 3:14:59 PM
File Name: BIM 360://CCC Willits Residential Center/E_CCC Willits_COMMON_2019-0228A.rvt

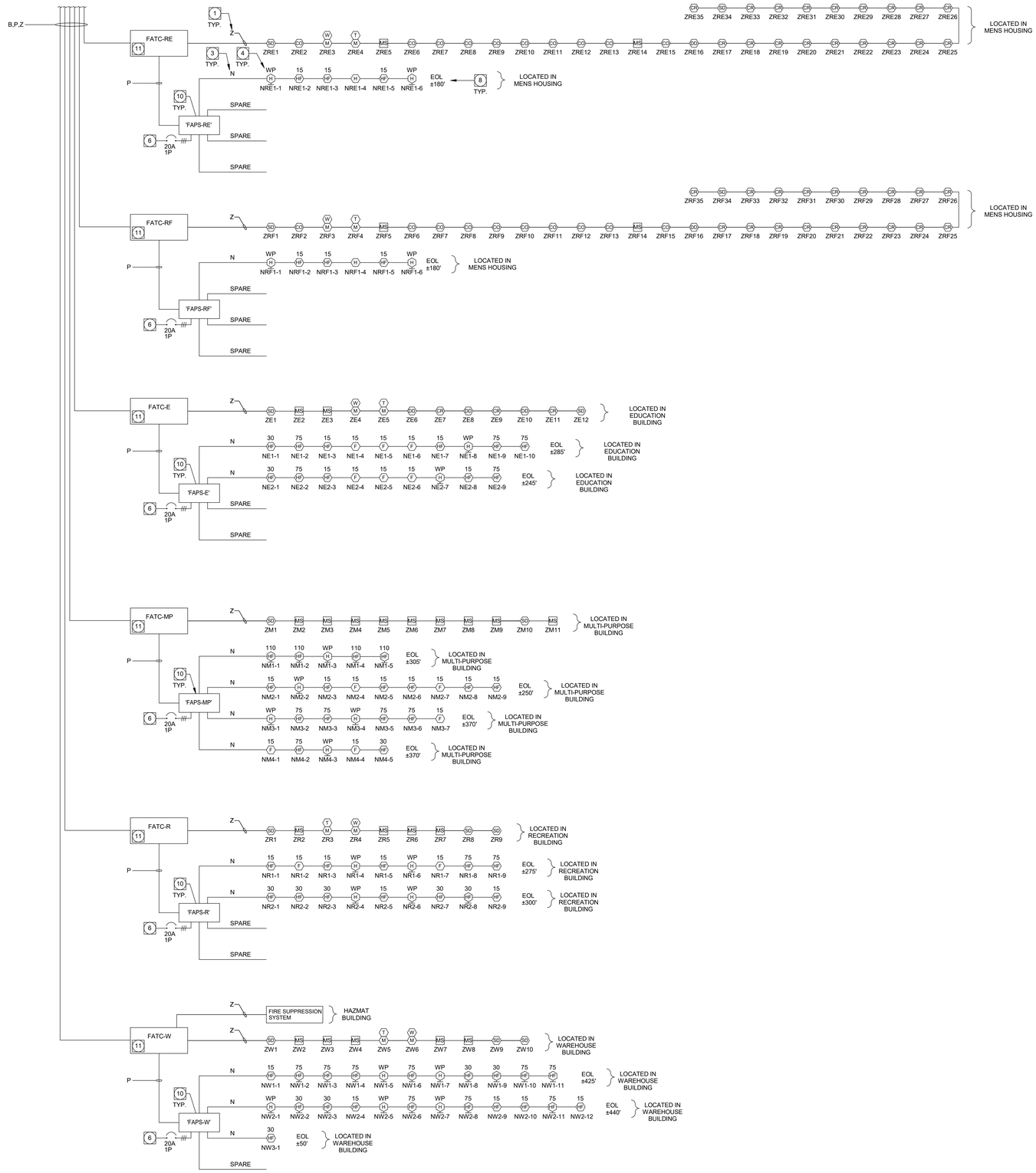

RISER DIAGRAM SPECIFIC NOTES:

1. 'Z' INDICATES ZONABLE/ADDRESSABLE CIRCUIT, PROVIDE 2#18 TWISTED PAIR PER CIRCUIT. SEE WIRE LEGEND FOR ADDITIONAL INFORMATION.
2. 'A' INDICATES AUDIBLE SPEAKER CIRCUIT, SEE WIRE LEGEND FOR ADDITIONAL INFORMATION.
3. N - VISUAL/AUDIBLE CIRCUIT NUMBER, PROVIDE 2#12 PER CIRCUIT, TYPICAL
4. NUMBER INDICATES CANDELA RATING OF STROBE DEVICE.
5. INDICATES WATTAGE FOR SPEAKER.
6. PROVIDE 3/4"C. WITH 2#12, 1#12 GRD. TO 120V DEDICATED CIRCUIT FOR POWER. PROVIDE 20AMP, 1-POLE CIRCUIT BREAKER WITH APPROVED LOCK-ON DEVICE, RED INDICATOR AND IDENTIFIED AS "FIRE ALARM CONTROL CIRCUIT" (NFPA 72, 10.5.6.2). CONNECT AS REQUIRED. PROVIDE ALL REQUIRED MOUNTING HARDWARE. MATCH A.I.C. RATING OF DEVICES USED.
7. FIRE ALARM DIGITAL AUDIO AMPLIFIER (AMP). SEE SYMBOL LIST FOR ADDITIONAL INFORMATION.
8. INDICATES LENGTH OF WIRE IN FEET. SEE WIRING DIAGRAM FOR WIRE TYPES. SEE VOLTAGE DROP CALCULATIONS FOR PERCENT DROPPED AND ADDITIONAL INFORMATION.
9. CONNECT AS REQUIRED TO HVAC UNIT FOR UNIT SHUT-DOWN. REFER TO DETAIL 3, SHEET FA002 FOR ADDITIONAL REQUIREMENTS.
10. FIRE ALARM POWER SUPPLY (FAPS), PROVIDE DEDICATED 120V CIRCUIT WITH RED INDICATOR AND APPROVED LOCK-ON DEVICE PER PLANS.
11. FIRE ALARM TERMINAL CABINET (FATC).
12. NOT USED
13. PROVIDE (2) DEDICATED PHONE LINES (LAND LINES) FOR FIRE ALARM SYSTEM MONITORING. CONTRACTOR TO SUPPLY UDACT (UNIVERSAL DIGITAL ALARM COMMUNICATOR TRANSMITTER) WHEN NOT SUPPLIED WITH CONTROL PANEL.
14. FIRE ALARM ANNUNCIATOR PANEL (FAAP). VERIFY WITH DISTRICT REPRESENTATIVE, A.H.J. AND ARCHITECT FOR EXACT LOCATION

FIRE ALARM GENERAL NOTES:

1. NOTIFICATION DEVICES IN ROOMS CONTAINING (2) OR MORE AUDIBLE AND/OR (2) OR MORE VISUAL DEVICES SHALL BE SYNCHRONIZED PER N.F.P.A. 72, 2016 EDITION (WITH CALIFORNIA AMENDMENTS) THIS SHALL INCLUDE AUDIBLE AND VISUAL DEVICES LOCATED IN ADJACENT/ADJOINING SPACES.
2. DO NOT DEVIATE FROM CONDUIT RUNS AS SHOWN ON FLOOR PLANS WITHOUT PRIOR APPROVAL FROM SYSTEM SUPPLIER / ENGINEER. FACTORS SUCH AS EXCESSIVE VOLTAGE DROP, ADDITIONAL PARTS, ENGINEERING, ETC. THAT ARE A RESULT OF CONDUIT RUN DEVIATIONS SHALL BE THE SOLE RESPONSIBILITY OF THE CONTRACTOR.
3. DETECTORS SHALL NOT BE LOCATED IN A DIRECT AIR-FLOW, NOR CLOSER THAN 3 FEET (915 mm) FROM ANY AIR SUPPLY DIFFUSER.
4. THE AUDIBLE ALARM NOTIFICATION APPLIANCES SHALL PROVIDE A SOUND PRESSURE LEVEL OF 15 dBA ABOVE THE AVERAGE AMBIENT SOUND LEVEL OR ≤ dBA ABOVE THE MAXIMUM SOUND LEVEL HAVING DURATION OF AT LEAST 60 SECONDS, WHICH IS GREATER, IN EVERY OCCUPIED SPACE WITHIN THE BUILDING. THE MINIMUM SOUND PRESSURE LEVEL SHALL BE 60 dBA PER CFC 907.10.2.
5. THE FIRE ALARM EVACUATION SIGNAL SHALL BE THE STANDARD THREE-PULSE TEMPORAL PATTERN PER THE "EXCEPTION" OF THE 2019 CALIFORNIA BUILDING CODE 907.5.2.1.3 ANSI S3.41.
6. THE EXISTING CAMPUS FIRE ALARM SYSTEM SHALL BE MAINTAINED AND OPERATIONAL AT ALL TIMES DURING ALTERATIONS AND CONSTRUCTION. WHEN PORTIONS OF THE SYSTEM REQUIRE ALTERATIONS, THE REMAINDER OF THE SYSTEM SHALL BE KEPT IN SERVICE. IF NECESSARY TO SHUT DOWN ENTIRE FIRE ALARM SYSTEM, CONTRACTOR SHALL PROVIDE A FIRE WATCH FOR ALL OCCUPIED AREAS OF WORK WHERE THE REQUIRED FIRE ALARM SYSTEM IS OUT OF SERVICE FOR THE DURATION OF THE SYSTEM OUTAGE. FIRE WATCH AND SYSTEM/EQUIPMENT IDENTIFICATIONS SHALL BE PER 2016 CFC 901.7. LOCAL FIRE AUTHORITY SHALL BE NOTIFIED 48 HOURS IN ADVANCE OF ANY SHUT DOWN.
7. EMERGENCY VOICE/ALARM COMMUNICATION SYSTEMS SHALL BE DESIGNED AND INSTALLED IN ACCORDANCE WITH NFPA 72. THE OPERATION OF ANY AUTOMATIC FIRE DETECTOR, SPRINKLER WATERFLOW DEVICE OR MANUAL FIRE ALARM BOX SHALL AUTOMATICALLY SOUND AN ALERT TONE FOLLOWED BY VOICE INSTRUCTIONS GIVING APPROVED INFORMATION AND DIRECTIONS FOR A GENERAL OR STAGED EVACUATION IN ACCORDANCE WITH THE FIRE SAFETY EVACUATION PLANS REQUIRED BY SECTION 404 PER CBC/CFC 907.5.2.2
8. EMERGENCY VOICE/ALARM COMMUNICATION SYSTEMS SHALL HAVE THE CAPABILITY TO BROADCAST LIVE VOICE MESSAGES BY PAGING ZONES ON A SELECTIVE AND ALL-CALL BASIS PER CBC/CFC 907.5.2.2.2.
9. EMERGENCY VOICE/ALARM COMMUNICATION SYSTEMS SHALL BE PROVIDED WITH AN APPROVED EMERGENCY POWER SOURCE PER CBC/CFC 907.5.2.2.5.

COMPLETE FIRE ALARM SUBMITTAL

MANUAL ADDRESSABLE FIRE ALARM SYSTEM

IDENTIFICATION STAMP
DIV. OF THE STATE ARCHITECT
APP: 02-118630 INC:
REVIEWED FOR
SS ☐ FLS ☐ ACS ☑
DATE: 04/13/2021

OFFICE OF THE STATE FIRE MARSHAL
APPROVED FIRE AND PANIC ONLY
Approval of this plan does not authorize or approve any omission or deviation from applicable regulations. Final approval is subject to field inspection. One set of approved plans shall be available on the project site at all times.
PERMIT NO.: 28 N 2332-CP
REVIEWED BY: LEO CATAYLO, OSFM
DATE: 4 / /2021

GENERAL SERVICES
Department of General Services
State of California
Real Estate Services Division
Project Management & Development Branch
707 Third Street, Suite 4-105
West Sacramento, California 95605

NICHOLS MELBURG & ROSSETTO
ARCHITECTS + ENGINEERS
300 Knollcrest Drive
Redding, CA. 96002
(530) 222-3300 (530) 222-3538 FAX
http://www.nmrdesign.com

Copyright © 2019
All ideas, designs, arrangements and plans indicated or represented by this drawing are owned by, and the property of, NICHOLS, MELBURG and ROSSETTO and were created, evolved and developed for use on, and in connection with, the specified project. None of such ideas, designs, arrangements or plans shall be used by, or disclosed to any person, firm or corporation for any purpose whatsoever without the written permission of NICHOLS, MELBURG and ROSSETTO.

LICENSE STAMPS

REGISTERED PROFESSIONAL ENGINEER RAYMOND W. SWAN, JR. No. E15610 12/31/2021 ELECTRICAL STATE OF CALIFORNIA
Date Signed: 3/25/2021

CONSULTANT
tklsc COLLABORATIVE
11870 Pierce Street, Suite 160
Riverside, California 92505
951.299.4160 www.tk1sc.com
Project Leader - Jerry Leonhardt
Electrical Lead - Reid Cordry
tk1sc Job #:2019-0228A

DRAWING STATUS
CONSTRUCTION DOCUMENTS

ISSUE

No.	Date	Description
1	10/20/2020	INITIAL PLAN REVIEW
2	01/22/2021	AGENCY RESUBMITTAL
3	03/22/2021	AGENCY RESUBMITTAL

If drawing is not 30" x 42" it is a reduced print

PROJECT
RESIDENTIAL CENTER, UKIAH: REPLACEMENT OF EXISTING RESIDENTIAL CENTER
440 EAST HILL ROAD
WILLITS, CALIFORNIA 95490
MENDOCINO COUNTY
CALIFORNIA CONSERVATION CORP

Supervisor	Designed	Drawn
		Author

DSA Application No.
02-118630

SHEET TITLE
FIRE ALARM RISER DIAGRAM

DGS Project Number: 0000000000001826
NMR Project Number: 18-6456

Reference North: NORTH
Sheet Scale:
Sheet Number: FA011

ISSUE DATE
July 9, 2021

Plot Date: 3/23/2021 3:15:02 PM
File Name: BIM 360://CCC Willits Residential Center/E_CCC Willits_COMMON_2019-0228A.rvt

BATTERY SIZING CALCULATION

PROJECT NAME: CCC WILLITS
PANEL LOCATION: ADMIN BUILDING
DATE PERFORMED: January 13, 2021

FACP

QTY.	DEVICE NAME	STD-BY (AMPS)		ALARM (AMPS)	
1	CONTROL PANEL	0.3400	0.3400	0.3400	0.3400
1	NETWORK DISPLAY	0.4000	0.4000	0.4000	0.4000
1	INITIATION MODULE	0.1300	0.1300	0.1300	0.1300
36	PULL STATION	0.0003	0.0108	0.0003	0.0108
25	SMOKE DETECTOR	0.0004	0.0100	0.0004	0.0100
10	DUCT DETECTOR	0.0004	0.0040	0.0004	0.0040
69	CO/SMOKE DETECTOR	0.0003	0.0207	0.0003	0.0207
2	HORN (EXTERIOR)	0.0000	0.0000	0.0690	0.1380
1	HORN/STROBE (WALL) 15cd	0.0000	0.0000	0.0440	0.0440
2	HORN/STROBE (CLG) 15cd	0.0000	0.0000	0.0540	0.1080
12	15cd STROBE (CEILING)	0.0000	0.0000	0.0041	0.0492
1	30cd STROBE (CEILING)	0.0003	0.0003	0.0630	0.0630
24	SPRINKLER MONITORING	0.0003	0.0072	0.0003	0.0072
122	CONTROL RELAY	0.0003	0.0366	0.0065	0.7930
10	REMOTE LED INDICATOR	0.0000	0.0000	0.0120	0.1200
1	ANNUNCIATOR	0.3000	0.3000	0.3250	0.3250
1	COMMUNICATOR	0.0400	0.0400	0.1000	0.1000
		0.0000	0.0000	0.0000	0.0000
	TOTALS =		1.2996		2.6629

STAND-BY LOAD = 1.2996 ALARM LOAD = 2.6629 AMPS
STAND-BY TIME = 24 ALARM TIME = 15 / 60 HRS

STAND-BY = 31.1904 ALARM = 0.6657 AMP HRS

TOTAL = STAND-BY + ALARM
= 31.19 + 0.67
= 31.86 Ah (AMP HRS)
MULTIPLY BY DERATING FACTOR OF 1.25 = 39.82 Ah (AMP HRS)

MINIMUM BATTERY SIZE = 39.82 AMPERE HOURS
PROVIDE MIN. (2) 55.00 Ah 12VDC BATTERIES AS REQUIRED FOR 24VDC OPERATION

BATTERY SIZING CALCULATION

PROJECT NAME: CCC WILLITS
PANEL LOCATION: COMET BUILDING
DATE PERFORMED: January 13, 2021

FAPS-C

QTY.	DEVICE NAME	STD-BY (AMPS)		ALARM (AMPS)	
1	POWER SUPPLY	0.0900	0.0900	0.0900	0.0900
2	HORN (INTERIOR)	0.0000	0.0000	0.0320	0.0640
1	HORN (EXTERIOR)	0.0000	0.0000	0.0690	0.0690
0	HORN/STROBE (WALL) 15cd	0.0000	0.0000	0.0440	0.0000
0	HORN/STROBE (WALL) 30cd	0.0000	0.0000	0.0650	0.0000
0	HORN/STROBE (WALL) 75cd	0.0000	0.0000	0.1110	0.0000
0	HORN/STROBE (WALL) 110cd	0.0000	0.0000	0.1570	0.0000
0	HORN/STROBE (CLG) 15cd	0.0000	0.0000	0.0540	0.0000
4	HORN/STROBE (CLG) 30cd	0.0000	0.0000	0.0710	0.2840
0	HORN/STROBE (CLG) 75cd	0.0000	0.0000	0.1370	0.0000
0	15cd STROBE (CEILING)	0.0000	0.0000	0.0410	0.0000
0	30cd STROBE (CEILING)	0.0000	0.0000	0.0630	0.0000
1	SYNC MODULE	0.0000	0.0000	0.0350	0.0350
		0.0000	0.0000	0.0000	0.0000
	TOTALS =		0.0900		0.5420

STAND-BY LOAD = 0.0900 ALARM LOAD = 0.5420 AMPS
STAND-BY TIME = 24 ALARM TIME = 15 / 60 HRS

STAND-BY = 2.1600 ALARM = 0.1355 AMP HRS

TOTAL = STAND-BY + ALARM
= 2.16 + 0.14
= 2.30 Ah (AMP HRS)
MULTIPLY BY DERATING FACTOR OF 1.25 = 2.87 Ah (AMP HRS)

MINIMUM BATTERY SIZE = 2.87 AMPERE HOURS
PROVIDE MIN. (2) 7.00 Ah 12VDC BATTERIES AS REQUIRED FOR 24VDC OPERATION

BATTERY SIZING CALCULATION

PROJECT NAME: CCC WILLITS
PANEL LOCATION: HOUSING RA BUILDING
DATE PERFORMED: January 13, 2021

FAPS-RA

QTY.	DEVICE NAME	STD-BY (AMPS)		ALARM (AMPS)	
1	POWER SUPPLY	0.0900	0.0900	0.0900	0.0900
1	HORN (INTERIOR)	0.0000	0.0000	0.0320	0.0320
2	HORN (EXTERIOR)	0.0000	0.0000	0.0690	0.1380
0	HORN/STROBE (WALL) 15cd	0.0000	0.0000	0.0440	0.0000
0	HORN/STROBE (WALL) 30cd	0.0000	0.0000	0.0650	0.0000
0	HORN/STROBE (WALL) 75cd	0.0000	0.0000	0.1110	0.0000
0	HORN/STROBE (WALL) 110cd	0.0000	0.0000	0.1570	0.0000
3	HORN/STROBE (CLG) 15cd	0.0000	0.0000	0.0540	0.1620
0	HORN/STROBE (CLG) 30cd	0.0000	0.0000	0.0710	0.0000
0	HORN/STROBE (CLG) 75cd	0.0000	0.0000	0.1370	0.0000
0	15cd STROBE (CEILING)	0.0000	0.0000	0.0410	0.0000
0	30cd STROBE (CEILING)	0.0000	0.0000	0.0630	0.0000
1	SYNC MODULE	0.0000	0.0000	0.0350	0.0350
		0.0000	0.0000	0.0000	0.0000
	TOTALS =		0.0900		0.4570

STAND-BY LOAD = 0.0900 ALARM LOAD = 0.4570 AMPS
STAND-BY TIME = 24 ALARM TIME = 15 / 60 HRS

STAND-BY = 2.1600 ALARM = 0.1143 AMP HRS

TOTAL = STAND-BY + ALARM
= 2.16 + 0.11
= 2.27 Ah (AMP HRS)
MULTIPLY BY DERATING FACTOR OF 1.25 = 2.84 Ah (AMP HRS)

MINIMUM BATTERY SIZE = 2.84 AMPERE HOURS
PROVIDE MIN. (2) 7.00 Ah 12VDC BATTERIES AS REQUIRED FOR 24VDC OPERATION

BATTERY SIZING CALCULATION

PROJECT NAME: CCC WILLITS
PANEL LOCATION: HOUSING RB BUILDING
DATE PERFORMED: January 13, 2021

FAPS-RB

QTY.	DEVICE NAME	STD-BY (AMPS)		ALARM (AMPS)	
1	POWER SUPPLY	0.0900	0.0900	0.0900	0.0900
1	HORN (INTERIOR)	0.0000	0.0000	0.0320	0.0320
2	HORN (EXTERIOR)	0.0000	0.0000	0.0690	0.1380
0	HORN/STROBE (WALL) 15cd	0.0000	0.0000	0.0440	0.0000
0	HORN/STROBE (WALL) 30cd	0.0000	0.0000	0.0650	0.0000
0	HORN/STROBE (WALL) 75cd	0.0000	0.0000	0.1110	0.0000
0	HORN/STROBE (WALL) 110cd	0.0000	0.0000	0.1570	0.0000
3	HORN/STROBE (CLG) 15cd	0.0000	0.0000	0.0540	0.1620
0	HORN/STROBE (CLG) 30cd	0.0000	0.0000	0.0710	0.0000
0	HORN/STROBE (CLG) 75cd	0.0000	0.0000	0.1370	0.0000
0	15cd STROBE (CEILING)	0.0000	0.0000	0.0410	0.0000
0	30cd STROBE (CEILING)	0.0000	0.0000	0.0630	0.0000
1	SYNC MODULE	0.0000	0.0000	0.0350	0.0350
		0.0000	0.0000	0.0000	0.0000
	TOTALS =		0.0900		0.4570

STAND-BY LOAD = 0.0900 ALARM LOAD = 0.4570 AMPS
STAND-BY TIME = 24 ALARM TIME = 15 / 60 HRS

STAND-BY = 2.1600 ALARM = 0.1143 AMP HRS

TOTAL = STAND-BY + ALARM
= 2.16 + 0.11
= 2.27 Ah (AMP HRS)
MULTIPLY BY DERATING FACTOR OF 1.25 = 2.84 Ah (AMP HRS)

MINIMUM BATTERY SIZE = 2.84 AMPERE HOURS
PROVIDE MIN. (2) 7.00 Ah 12VDC BATTERIES AS REQUIRED FOR 24VDC OPERATION

BATTERY SIZING CALCULATION

PROJECT NAME: CCC WILLITS
PANEL LOCATION: HOUSING RC BUILDING
DATE PERFORMED: January 13, 2021

FAPS-RC

QTY.	DEVICE NAME	STD-BY (AMPS)		ALARM (AMPS)	
1	POWER SUPPLY	0.0900	0.0900	0.0900	0.0900
1	HORN (INTERIOR)	0.0000	0.0000	0.0320	0.0320
2	HORN (EXTERIOR)	0.0000	0.0000	0.0690	0.1380
0	HORN/STROBE (WALL) 15cd	0.0000	0.0000	0.0440	0.0000
0	HORN/STROBE (WALL) 30cd	0.0000	0.0000	0.0650	0.0000
0	HORN/STROBE (WALL) 75cd	0.0000	0.0000	0.1110	0.0000
0	HORN/STROBE (WALL) 110cd	0.0000	0.0000	0.1570	0.0000
3	HORN/STROBE (CLG) 15cd	0.0000	0.0000	0.0540	0.1620
0	HORN/STROBE (CLG) 30cd	0.0000	0.0000	0.0710	0.0000
0	HORN/STROBE (CLG) 75cd	0.0000	0.0000	0.1370	0.0000
0	15cd STROBE (CEILING)	0.0000	0.0000	0.0410	0.0000
0	30cd STROBE (CEILING)	0.0000	0.0000	0.0630	0.0000
1	SYNC MODULE	0.0000	0.0000	0.0350	0.0350
		0.0000	0.0000	0.0000	0.0000
	TOTALS =		0.0900		0.4570

STAND-BY LOAD = 0.0900 ALARM LOAD = 0.4570 AMPS
STAND-BY TIME = 24 ALARM TIME = 15 / 60 HRS

STAND-BY = 2.1600 ALARM = 0.1143 AMP HRS

TOTAL = STAND-BY + ALARM
= 2.16 + 0.11
= 2.27 Ah (AMP HRS)
MULTIPLY BY DERATING FACTOR OF 1.25 = 2.84 Ah (AMP HRS)

MINIMUM BATTERY SIZE = 2.84 AMPERE HOURS
PROVIDE MIN. (2) 7.00 Ah 12VDC BATTERIES AS REQUIRED FOR 24VDC OPERATION

BATTERY SIZING CALCULATION

PROJECT NAME: CCC WILLITS
PANEL LOCATION: HOUSING RD BUILDING
DATE PERFORMED: January 13, 2021

FAPS-RD

QTY.	DEVICE NAME	STD-BY (AMPS)		ALARM (AMPS)	
1	POWER SUPPLY	0.0900	0.0900	0.0900	0.0900
1	HORN (INTERIOR)	0.0000	0.0000	0.0320	0.0320
2	HORN (EXTERIOR)	0.0000	0.0000	0.0690	0.1380
0	HORN/STROBE (WALL) 15cd	0.0000	0.0000	0.0440	0.0000
0	HORN/STROBE (WALL) 30cd	0.0000	0.0000	0.0650	0.0000
0	HORN/STROBE (WALL) 75cd	0.0000	0.0000	0.1110	0.0000
0	HORN/STROBE (WALL) 110cd	0.0000	0.0000	0.1570	0.0000
3	HORN/STROBE (CLG) 15cd	0.0000	0.0000	0.0540	0.1620
0	HORN/STROBE (CLG) 30cd	0.0000	0.0000	0.0710	0.0000
0	HORN/STROBE (CLG) 75cd	0.0000	0.0000	0.1370	0.0000
0	15cd STROBE (CEILING)	0.0000	0.0000	0.0410	0.0000
0	30cd STROBE (CEILING)	0.0000	0.0000	0.0630	0.0000
1	SYNC MODULE	0.0000	0.0000	0.0350	0.0350
		0.0000	0.0000	0.0000	0.0000
	TOTALS =		0.0900		0.4570

STAND-BY LOAD = 0.0900 ALARM LOAD = 0.4570 AMPS
STAND-BY TIME = 24 ALARM TIME = 15 / 60 HRS

STAND-BY = 2.1600 ALARM = 0.1143 AMP HRS

TOTAL = STAND-BY + ALARM
= 2.16 + 0.11
= 2.27 Ah (AMP HRS)
MULTIPLY BY DERATING FACTOR OF 1.25 = 2.84 Ah (AMP HRS)

MINIMUM BATTERY SIZE = 2.84 AMPERE HOURS
PROVIDE MIN. (2) 7.00 Ah 12VDC BATTERIES AS REQUIRED FOR 24VDC OPERATION

BATTERY SIZING CALCULATION

PROJECT NAME: CCC WILLITS
PANEL LOCATION: HOUSING RE BUILDING
DATE PERFORMED: January 13, 2021

FAPS-RE

QTY.	DEVICE NAME	STD-BY (AMPS)		ALARM (AMPS)	
1	POWER SUPPLY	0.0900	0.0900	0.0900	0.0900
1	HORN (INTERIOR)	0.0000	0.0000	0.0320	0.0320
2	HORN (EXTERIOR)	0.0000	0.0000	0.0690	0.1380
0	HORN/STROBE (WALL) 15cd	0.0000	0.0000	0.0440	0.0000
0	HORN/STROBE (WALL) 30cd	0.0000	0.0000	0.0650	0.0000
0	HORN/STROBE (WALL) 75cd	0.0000	0.0000	0.1110	0.0000
0	HORN/STROBE (WALL) 110cd	0.0000	0.0000	0.1570	0.0000
3	HORN/STROBE (CLG) 15cd	0.0000	0.0000	0.0540	0.1620
0	HORN/STROBE (CLG) 30cd	0.0000	0.0000	0.0710	0.0000
0	HORN/STROBE (CLG) 75cd	0.0000	0.0000	0.1370	0.0000
0	15cd STROBE (CEILING)	0.0000	0.0000	0.0410	0.0000
0	30cd STROBE (CEILING)	0.0000	0.0000	0.0630	0.0000
1	SYNC MODULE	0.0000	0.0000	0.0350	0.0350
		0.0000	0.0000	0.0000	0.0000
	TOTALS =		0.0900		0.4570

STAND-BY LOAD = 0.0900 ALARM LOAD = 0.4570 AMPS
STAND-BY TIME = 24 ALARM TIME = 15 / 60 HRS

STAND-BY = 2.1600 ALARM = 0.1143 AMP HRS

TOTAL = STAND-BY + ALARM
= 2.16 + 0.11
= 2.27 Ah (AMP HRS)
MULTIPLY BY DERATING FACTOR OF 1.25 = 2.84 Ah (AMP HRS)

MINIMUM BATTERY SIZE = 2.84 AMPERE HOURS
PROVIDE MIN. (2) 7.00 Ah 12VDC BATTERIES AS REQUIRED FOR 24VDC OPERATION

BATTERY SIZING CALCULATION

PROJECT NAME: CCC WILLITS
PANEL LOCATION: HOUSING RF BUILDING
DATE PERFORMED: January 13, 2021

FAPS-RF

QTY.	DEVICE NAME	STD-BY (AMPS)		ALARM (AMPS)	
1	POWER SUPPLY	0.0900	0.0900	0.0900	0.0900
1	HORN (INTERIOR)	0.0000	0.0000	0.0320	0.0320
2	HORN (EXTERIOR)	0.0000	0.0000	0.0690	0.1380
0	HORN/STROBE (WALL) 15cd	0.0000	0.0000	0.0440	0.0000
0	HORN/STROBE (WALL) 30cd	0.0000	0.0000	0.0650	0.0000
0	HORN/STROBE (WALL) 75cd	0.0000	0.0000	0.1110	0.0000
0	HORN/STROBE (WALL) 110cd	0.0000	0.0000	0.1570	0.0000
3	HORN/STROBE (CLG) 15cd	0.0000	0.0000	0.0540	0.1620
0	HORN/STROBE (CLG) 30cd	0.0000	0.0000	0.0710	0.0000
0	HORN/STROBE (CLG) 75cd	0.0000	0.0000	0.1370	0.0000
0	15cd STROBE (CEILING)	0.0000	0.0000	0.0410	0.0000
0	30cd STROBE (CEILING)	0.0000	0.0000	0.0630	0.0000
1	SYNC MODULE	0.0000	0.0000	0.0350	0.0350
		0.0000	0.0000	0.0000	0.0000
	TOTALS =		0.0900		0.4570

STAND-BY LOAD = 0.0900 ALARM LOAD = 0.4570 AMPS
STAND-BY TIME = 24 ALARM TIME = 15 / 60 HRS

STAND-BY = 2.1600 ALARM = 0.1143 AMP HRS

TOTAL = STAND-BY + ALARM
= 2.16 + 0.11
= 2.27 Ah (AMP HRS)
MULTIPLY BY DERATING FACTOR OF 1.25 = 2.84 Ah (AMP HRS)

MINIMUM BATTERY SIZE = 2.84 AMPERE HOURS
PROVIDE MIN. (2) 7.00 Ah 12VDC BATTERIES AS REQUIRED FOR 24VDC OPERATION

BATTERY SIZING CALCULATION

PROJECT NAME: CCC WILLITS
PANEL LOCATION: EDUCATION BUILDING
DATE PERFORMED: January 13, 2021

FAPS-E

QTY.	DEVICE NAME	STD-BY (AMPS)		ALARM (AMPS)	
1	POWER SUPPLY	0.0900	0.0900	0.0900	0.0900
0	HORN (INTERIOR)	0.0000	0.0000	0.0320	0.0000
2	HORN (EXTERIOR)	0.0000	0.0000	0.0690	0.1380
0	HORN/STROBE (WALL) 15cd	0.0000	0.0000	0.0440	0.0000
0	HORN/STROBE (WALL) 30cd	0.0000	0.0000	0.0650	0.0000
0	HORN/STROBE (WALL) 75cd	0.0000	0.0000	0.1110	0.0000
0	HORN/STROBE (WALL) 110cd	0.0000	0.0000	0.1570	0.0000
4	HORN/STROBE (CLG) 15cd	0.0000	0.0000	0.0540	0.2160
2	HORN/STROBE (CLG) 30cd	0.0000	0.0000	0.0710	0.1420
5	HORN/STROBE (CLG) 75cd	0.0000	0.0000	0.1370	0.6850
6	15cd STROBE (CEILING)	0.0000	0.0000	0.0410	0.2460
0	30cd STROBE (CEILING)	0.0000	0.0000	0.0630	0.0000
2	SYNC MODULE	0.0000	0.0000	0.0350	0.0700
		0.0000	0.0000	0.0000	0.0000
	TOTALS =		0.0900		1.5870

STAND-BY LOAD = 0.0900 ALARM LOAD = 1.5870 AMPS
STAND-BY TIME = 24 ALARM TIME = 15 / 60 HRS

STAND-BY = 2.1600 ALARM = 0.3968 AMP HRS

TOTAL = STAND-BY + ALARM
= 2.16 + 0.40
= 2.56 Ah (AMP HRS)
MULTIPLY BY DERATING FACTOR OF 1.25 = 3.20 Ah (AMP HRS)

MINIMUM BATTERY SIZE = 3.20 AMPERE HOURS
PROVIDE MIN. (2) 7.00 Ah 12VDC BATTERIES AS REQUIRED FOR 24VDC OPERATION

BATTERY SIZING CALCULATION

PROJECT NAME: CCC WILLITS
PANEL LOCATION: MULTI-PURPOSE BUILDING
DATE PERFORMED: January 13, 2021

FAPS-MP

QTY.	DEVICE NAME	STD-BY (AMPS)		ALARM (AMPS)	
1	POWER SUPPLY	0.0900	0.0900	0.0900	0.0900
0	HORN (INTERIOR)	0.0000	0.0000	0.0320	0.0000
5	HORN (EXTERIOR)	0.0000	0.0000	0.0690	0.3450
0	HORN/STROBE (WALL) 15cd	0.0000	0.0000	0.0440	0.0000
0	HORN/STROBE (WALL) 30cd	0.0000	0.0000	0.0650	0.0000
0	HORN/STROBE (WALL) 75cd	0.0000	0.0000	0.1110	0.0000
4	HORN/STROBE (WALL) 110cd	0.0000	0.0000	0.1570	0.6280
6	HORN/STROBE (CLG) 15cd	0.0000	0.0000	0.0540	0.3240
1	HORN/STROBE (CLG) 30cd	0.0000	0.0000	0.0710	0.0710
5	HORN/STROBE (CLG) 75cd	0.0000	0.0000	0.1370	0.6850
5	15cd STROBE (CEILING)	0.0000	0.0000	0.0410	0.2050
0	30cd STROBE (CEILING)	0.0000	0.0000	0.0630	0.0000
4	SYNC MODULE	0.0000	0.0000	0.0350	0.1400
		0.0000	0.0000	0.0000	0.0000
	TOTALS =		0.0900		2.4880

STAND-BY LOAD = 0.0900 ALARM LOAD = 2.4880 AMPS
STAND-BY TIME = 24 ALARM TIME = 15 / 60 HRS

STAND-BY = 2.1600 ALARM = 0.6220 AMP HRS

TOTAL = STAND-BY + ALARM
= 2.16 + 0.62
= 2.78 Ah (AMP HRS)
MULTIPLY BY DERATING FACTOR OF 1.25 = 3.48 Ah (AMP HRS)

MINIMUM BATTERY SIZE = 3.48 AMPERE HOURS
PROVIDE MIN. (2) 7.00 Ah 12VDC BATTERIES AS REQUIRED FOR 24VDC OPERATION

BATTERY SIZING CALCULATION

PROJECT NAME: CCC WILLITS
PANEL LOCATION: RECREATION BUILDING
DATE PERFORMED: January 13, 2021

FAPS-R

QTY.	DEVICE NAME	STD-BY (AMPS)		ALARM (AMPS)	
1	POWER SUPPLY	0.0900	0.0900	0.0900	0.0900
0	HORN (INTERIOR)	0.0000	0.0000	0.0320	0.0000
4	HORN (EXTERIOR)	0.0000	0.0000	0.0690	0.2760
0	HORN/STROBE (WALL) 15cd	0.0000	0.0000	0.0440	0.0000
1	HORN/STROBE (WALL) 30cd	0.0000	0.0000	0.0650	0.0650
0	HORN/STROBE (WALL) 75cd	0.0000	0.0000	0.1110	0.0000
0	HORN/STROBE (WALL) 110cd	0.0000	0.0000	0.1570	0.0000
5	HORN/STROBE (CLG) 15cd	0.0000	0.0000	0.0540	0.2700
4	HORN/STROBE (CLG) 30cd	0.0000	0.0000	0.0710	0.2840
2	HORN/STROBE (CLG) 75cd	0.0000	0.0000	0.1370	0.2740
2	15cd STROBE (CEILING)	0.0000	0.0000	0.0410	0.0820
0	30cd STROBE (CEILING)	0.0000	0.0000	0.0630	0.0000
2	SYNC MODULE	0.0000	0.0000	0.0350	0.0700
		0.0000	0.0000	0.0000	0.0000
	TOTALS =		0.0900		1.4110

STAND-BY LOAD = 0.0900 ALARM LOAD = 1.4110 AMPS
STAND-BY TIME = 24 ALARM TIME = 15 / 60 HRS

STAND-BY = 2.1600 ALARM = 0.3528 AMP HRS

TOTAL = STAND-BY + ALARM
= 2.16 + 0.35
= 2.51 Ah (AMP HRS)
MULTIPLY BY DERATING FACTOR OF 1.25 = 3.14 Ah (AMP HRS)

MINIMUM BATTERY SIZE = 3.14 AMPERE HOURS
PROVIDE MIN. (2) 7.00 Ah 12VDC BATTERIES AS REQUIRED FOR 24VDC OPERATION

BATTERY SIZING CALCULATION

PROJECT NAME: CCC WILLITS
PANEL LOCATION: WAREHOUSE BUILDING
DATE PERFORMED: January 13, 2021

FAPS-W

QTY.	DEVICE NAME	STD-BY (AMPS)		ALARM (AMPS)	
1	POWER SUPPLY	0.0900	0.0900	0.0900	0.0900
0	HORN (INTERIOR)	0.0000	0.0000	0.0320	0.0000
5	HORN (EXTERIOR)	0.0000	0.0000	0.0690	0.3450
0	HORN/STROBE (WALL) 15cd	0.0000	0.0000	0.0440	0.0000
4	HORN/STROBE (WALL) 30cd	0.0000	0.0000	0.0650	0.2600
9	HORN/STROBE (WALL) 75cd	0.0000	0.0000	0.1110	0.9990
0	HORN/STROBE (WALL) 110cd	0.0000	0.0000	0.1570	0.0000
5	HORN/STROBE (CLG) 15cd	0.0000	0.0000	0.0540	0.2700
1	HORN/STROBE (CLG) 30cd	0.0000	0.0000	0.0710	0.0710
0	HORN/STROBE (CLG) 75cd	0.0000	0.0000	0.1370	0.0000
0	15cd STROBE (CEILING)	0.0000	0.0000	0.0410	0.0000
0	30cd STROBE (CEILING)	0.0000	0.0000	0.0630	0.0000
2	SYNC MODULE	0.0000	0.0000	0.0350	0.0700
		0.0000	0.0000	0.0000	0.0000
	TOTALS =		0.0900		2.1050

STAND-BY LOAD = 0.0900 ALARM LOAD = 2.1050 AMPS
STAND-BY TIME = 24 ALARM TIME = 15 / 60 HRS

STAND-BY = 2.1600 ALARM = 0.5263 AMP HRS

TOTAL = STAND-BY + ALARM
= 2.16 + 0.53
= 2.69 Ah (AMP HRS)
MULTIPLY BY DERATING FACTOR OF 1.25 = 3.36 Ah (AMP HRS)

MINIMUM BATTERY SIZE = 3.36 AMPERE HOURS
PROVIDE MIN. (2) 7.00 Ah 12VDC BATTERIES AS REQUIRED FOR 24VDC OPERATION

VOLTAGE DROP CALCULATIONS GENERAL NOTES:

1. THE LISTED MANUFACTURE OPERATING VOLTAGE RANGE FOR EQUIPMENT AND DEVICES ARE AS FOLLOWS:

   DEVICES = 16 - 33 VDC (STROBES), 70.7 VDC (SPEAKERS)
   EQUIPMENT = +24VDC FILTERED, REGULATED
   BATTERY = 20.4 VDC END OF USEFUL LIFE PER NFPA 72 HANDBOOK AND UL 864.

2. VOLTAGE DROP OPERATING VOLTAGE FORMULA:

$$\left(\frac{\text{WIRE LENGTH x TOTAL CURRENT AMPS x 21.6}}{\text{CIRC. MILS.}}\right) = \text{VOLTS DROPPED}$$

$$\left(\frac{\text{VOLTS DROPPED x 100}}{20.4}\right) = \text{\% VOLTS DROPPED}$$

VOLTS DROPPED - 20.4 = OPERATING VOLTAGE

BATTERY CALCULATIONS GENERAL NOTE:

1. CONTRACTOR TO PROVIDE BATTERY MANUFACTURER DATE STAMP PER NFPA 72. TYPICAL FOR ALL CONTROL PANELS, POWER SUPPLY PANELS AND AUDIO AMPLIFIER PANELS.

COMPLETE FIRE ALARM SUBMITTAL

MANUAL ADDRESSABLE FIRE ALARM SYSTEM

IDENTIFICATION STAMP
DIV. OF THE STATE ARCHITECT
APP: 02-118630 INC:
REVIEWED FOR
SS ☐ FLS ☐ ACS ☑
DATE: 04/13/2021

OFFICE OF THE STATE FIRE MARSHAL
APPROVED FIRE AND PANIC ONLY
Approval of this plan does not authorize or approve any omission or deviation from applicable regulations. Final approval is subject to field inspection. One set of approved plans shall be available on the project site at all times.
PERMIT NO.: 20-N-2332-CP
REVIEWED BY: LITO CATAYLO, OSFM
DATE: 3/1 /2021

DGS GENERAL SERVICES
Department of General Services
State of California
Real Estate Services Division
Project Management & Development Branch
707 Third Street, Suite 4-105
West Sacramento, California 95605

NICHOLS MELBURG & ROSSETTO
ARCHITECTS + ENGINEERS
300 Knollcrest Drive
Redding, CA. 96002
(530) 222-3300 (530) 222-3538 FAX
http://www.nmrdesign.com

Copyright © 2019
All ideas, designs, arrangements and plans indicated or represented by this drawing are owned by, and the property of, NICHOLS, MELBURG and ROSSETTO and were created, evolved and developed for use on, and in conjunction with, the specified project. None of such ideas, designs, arrangements or plans shall be used by, or disclosed to any person, firm or corporation for any purpose whatsoever without the written permission of NICHOLS, MELBURG and ROSSETTO.

LICENSE STAMPS
REGISTERED PROFESSIONAL ENGINEER
RAYMOND W. SWARTZ
No. E15610
Exp. 12/31/2021
ELECTRICAL
STATE OF CALIFORNIA
Date Signed: 3/25/2021

CONSULTANT
tk1sc COLLABORATIVE
11870 Pierce Street, Suite 160
Riverside, California 92505
951.299.4160 www.tk1sc.com
Project Leader - Jerry Leonhardt
Electrical Lead - Reid Cordry
tk1sc Job #:2019-0228A

DRAWING STATUS
CONSTRUCTION DOCUMENTS

ISSUE

No.	Date	Description
1	10/20/2020	INITIAL PLAN REVIEW
2	01/22/2021	AGENCY RESUBMITTAL
3	03/22/2021	AGENCY RESUBMITTAL

If drawing is not 30" x 42" it is a reduced print

PROJECT
RESIDENTIAL CENTER, UKIAH: REPLACEMENT OF EXISTING RESIDENTIAL CENTER
440 EAST HILL ROAD
WILLITS, CALIFORNIA 95490
MENDOCINO COUNTY
CALIFORNIA CONSERVATION CORP

Supervisor | Designed | Drawn: Author

DSA Application No.
02-118630

SHEET TITLE
FIRE ALARM CALCULATIONS

DGS Project Number: 000000000001826
NMR Project Number: 18-6456

Reference North: NORTH
Sheet Scale
Sheet Number
FA012

ISSUE DATE
July 9, 2021

Plot Date: 3/22/2021 9:00:41 AM
File Name: BIM 360://CCC Willits Residential Center/E_CCC Willits_COMMON_2019-0228A.rvt

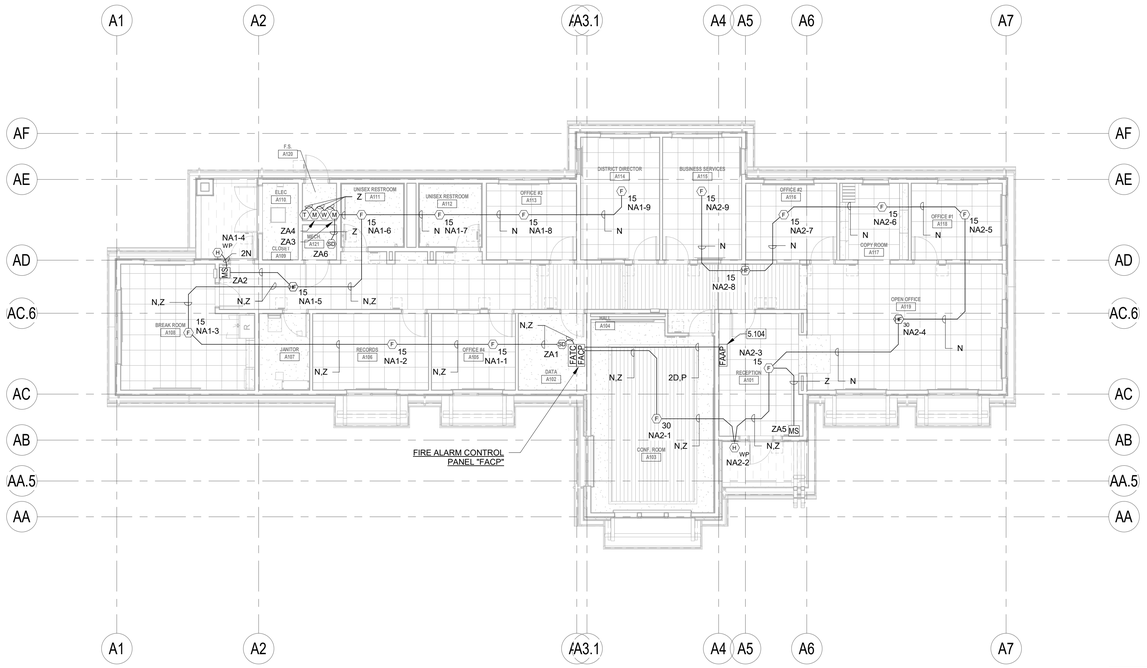

ADMINISTRATION BUILDING FIRE ALARM PLAN

SCALE: 1/8" = 1'-0"

KEYNOTES

5.104 CFC907.6.4.1 COMPLIANT FIRE ALARM ANNUNCIATOR PANEL (FAAP), VERIFY WITH DISTRICT REPRESENTATIVE, A.H.J. AND ARCHITECT FOR EXACT LOCATION.

FIRE ALARM PLAN GENERAL NOTES:

1. NOTIFICATION DEVICES IN ROOMS CONTAINING (2) OR MORE AUDIBLE AND/OR (2) OR MORE VISUAL DEVICES SHALL BE SYNCHRONIZED PER N.F.P.A. 72, 2016 EDITION (WITH CALIFORNIA AMENDMENTS) THIS SHALL INCLUDE AUDIBLE AND VISUAL DEVICES LOCATED IN ADJACENT/ADJOINING SPACES.
2. DO NOT DEVIATE FROM CONDUIT RUNS AS SHOWN ON FLOOR PLANS WITHOUT PRIOR APPROVAL FROM SYSTEM SUPPLIER / ENGINEER. FACTORS SUCH AS EXCESSIVE VOLTAGE DROP, ADDITIONAL PARTS, ENGINEERING, ETC. THAT ARE A RESULT OF CONDUIT RUN DEVIATIONS SHALL BE THE SOLE RESPONSIBILITY OF THE CONTRACTOR.
3. DETECTORS SHALL NOT BE LOCATED IN A DIRECT AIR-FLOW, NOR CLOSER THAN 3 FEET (915 mm) FROM ANY AIR SUPPLY DIFFUSER.
4. THE AUDIBLE ALARM NOTIFICATION APPLIANCES SHALL PROVIDE A SOUND PRESSURE LEVEL OF 15 dBA ABOVE THE AVERAGE AMBIENT SOUND LEVEL OR 5 dBA ABOVE THE MAXIMUM SOUND LEVEL HAVING DURATION OF AT LEAST 60 SECONDS, WHICHEVER IS GREATER, IN EVERY OCCUPIABLE SPACE WITHIN THE BUILDING. (2016 CFC 907.5.2.1.1)
5. THE VOICE/ALARM COMMUNICATION SYSTEM VOICE MESSAGE SHALL COMPLY WITH NFPA 72 SECTIONS 18.4 AND 24.4 FOR GENERAL REQUIREMENTS, INTELLIGIBILITY, AUDIBILITY, MESSAGE PRIORITY, TONES, ETC.
6. REFER TO ARCHITECTURAL EXTERIOR ELEVATIONS FOR PRECISE OUTLET LOCATIONS.
7. REFER TO ARCHITECTURAL REFLECTED CEILING PLAN FOR EXACT LOCATION OF ALL CEILING MOUNTED DEVICES.
8. IF SHIELDED WIRE IS USED, THE FOLLOWING MUST BE OBSERVED.
   A. METALLIC CONTINUITY OF THE SHIELD MUST BE MAINTAINED AND INSULATED THROUGHOUT THE ENTIRE LENGTH OF THE CABLE.
   B. THE ENTIRE LENGTH OF THE CABLE MUST HAVE A RESISTANCE GREATER THAN 1 MEGOHM TO EARTH.
9. ALL PENETRATIONS THROUGH FIRE RATED WALLS SHALL BE PROTECTED FROM THE SPREAD OF FIRE WITH AN APPROVED FIRE STOP SYSTEM EQUAL TO OR GREATER THAN THE FIRE RATING OF THE STRUCTURE / SURFACE BEING PENETRATED AS I DENTIFIED IN CBC CHAPTER 7, UL OR OTHER LAB TESTING CRITERIA. APPROVED TYPES OF MATERIALS SHALL BE IDENTIFIED WITHIN THE FIRE ALARM SECTION OF THE PROJECT SPECIFICATIONS.
10. A SYSTEM GROUND MUST BE PROVIDED FOR EARTH DETECTION AND LIGHTNING PROTECTION DEVICES. THIS CONNECTION SHALL BE MADE TO AN APPROVED DEDICATED EARTH CONNECTION PER CEC, ARTICLE 250.
11. WIRING IN DUCTS, PLENUMS AND OTHER AIR HANDLING SPACES MUST BE INSTALLED IN ACCORDANCE WITH CEC 2019.
12. UNDERGROUND WIRING MUST BE FREE OF ALL WATER.
13. ALL FIRE ALARM SYSTEM CONDUCTORS SHALL BE RUN IN A DEDICATED FIRE ALARM CONDUIT SYSTEM.
14. WHERE A DETECTOR IS INDICATED TO BE INSTALLED ABOVE THE CEILING AND NO ACCESS TO THE CEILING SPACE EXISTS, THE ELECTRICAL CONTRACTOR SHALL FURNISH ACCESS PANELS. THE DETECTOR SHALL BE EASILY ACCESSIBLE AND THE LOCATION OF THE DETECTOR SHALL BE CLEARLY MARKED.
15. WIRING OTHER THAN THAT CONNECTED TO ELEVATOR CABS MUST NOT BE RUN IN ELEVATOR SHAFTS (REF. CEC, ARTICLE 620).
16. FIRE ALARM SYSTEM UTILIZES A COMPLETE COVERAGE, FULLY AUTOMATIC SYSTEM. PROVIDE RELAY MODULE(S) AT FATC/FACP LOCATIONS FOR CONTROL OF HVAC SHUT DOWN, SMOKE/FIRE DAMPER CLOSURE AND DOOR HOLD RELEASES.
17. WHERE NEW DEVICES (AND ASSOCIATED CONDUIT) CANNOT PHYSICALLY BE MOUNTED CONCEALED IN WALLS, RUN IN PANDUIT SURFACE RACEWAY/WIREWAY (AND DEVICES SHALL BE MOUNTED ON SURFACE OUTLET BOXES). REFER TO SPECIFICATIONS. PROVIDE SIZE OF RACEWAY TO ACCOMMODATE THE REQUIRED CONDUCTORS. WHERE CONDUIT IS INDICATED, PROVIDE SURFACE RACEWAY WITH AN EQUAL CROSS SECTION TO THE DIAMETER OF THE CONDUIT INDICATED.
18. DETECTOR SENSITIVITY SHALL BE TESTED USING MANUFACTURER'S CALIBRATED SENSITIVITY INSTRUMENT OR OTHER CALIBRATED TESTING METHOD. (CFC 907.8.3)
19. STORAGE BATTERIES SHALL BE PERMANENTLY MARKED WITH THE MONTH AND YEAR OF MAUFACTURE, USING THE MONTH/YEAR FORMAT. THE MARKING SHALL BE PERMITTED TO BE APPLIED BY EITHER THE MANUFACTURER OR THE INSTALLER. WHERE THE BATTERY IS NOT MARKED WITH THE MONTH/YEAR BY THE MANUFACTURER, THE INSTALLER SHALL OBTAIN THE DATE-CODE AND MARK THE BATTERY WITH THE MONTH/YEAR OF BATTERY MANUFACTURE.

COMPLETE FIRE ALARM SUBMITTAL

MANUAL ADDRESSABLE FIRE ALARM SYSTEM

WALL TYPES LEGEND

SEE SHEET G121 FOR ASSEMBLY TYPES

EXTERIOR

2 x 6 WOOD STUD WALL - NON RATED	0-W1-6 * • #
2 x 12 WOOD STUD WALL - NON RATED	0-W1-12 * • #

INTERIOR

2 x 4 WOOD STUD WALL - NON RATED	0-W2-4 * • #
2 x 6 WOOD STUD WALL - NON RATED	0-W2-6 * • #
2 x 8 WOOD STUD WALL - NON RATED	0-W2-8 * • #
2 x 12 WOOD STUD WALL - NON RATED	0-W2-12 * • #
2 x 4 WOOD STUD WALL - ACOUSTIC	0-W5-4 * • #
2 x 6 WOOD STUD WALL - ACOUSTIC	0-W5-6 * • #
2 X 4 WOOD STUD WALL - 1-HR FIRE PARTITION W/ PROTECTED OPENINGS	1-W3-4 * • #
2 X 6 WOOD STUD WALL - 1-HR FIRE PARTITION W/ PROTECTED OPENINGS	1-W3-6 * • #

WALL TYPE NOTES

PARTITION SYMBOL

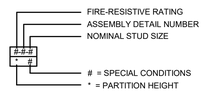

IDENTIFICATION STAMP
DIV. OF THE STATE ARCHITECT
APP: 02-118630 INC:
REVIEWED FOR
SS ☐ FLS ☐ ACS ☑
DATE: 04/13/2021

OFFICE OF THE STATE FIRE MARSHAL
APPROVED FIRE AND PANIC ONLY
Approval of this plan does not authorize or approve any omission or deviation from applicable regulations. Final approval is subject to field inspection. One set of approved plans shall be available on the project site at all times.
PERMIT NO: 28-N-2332-CP
REVIEWED BY: LEO CATAYLO, OSFM
DATE: 4/1/2021

GENERAL SERVICES
Department of General Services
State of California
Real Estate Services Division
Project Management & Development Branch
707 Third Street, Suite 4-105
West Sacramento, California 95605

NICHOLS MELBURG & ROSSETTO
ARCHITECTS + ENGINEERS
300 Knollcrest Drive
Redding, CA. 96002
(530) 222-3300 (530) 222-3538 FAX
http://www.nmrdesign.com

Copyright © 2019
All ideas, designs, arrangements and plans indicated or represented by this drawing are owned by, and the property of, NICHOLS, MELBURG and ROSSETTO and were created, evolved and developed for use on, and in connection with, the specified project. None of such ideas, designs, arrangements or plans shall be used by, or disclosed to, any person, firm or corporation for any purpose whatsoever without the written permission of NICHOLS, MELBURG and ROSSETTO.

LICENSE STAMPS

REGISTERED PROFESSIONAL ENGINEER RAYMOND W. SWEET
No. E15610
12/31/2021
ELECTRICAL
STATE OF CALIFORNIA
Date Signed 3/25/2021

CONSULTANT
tk1sc COLLABORATIVE
11870 Pierce Street, Suite 160
Riverside, California 92505
951.299.4160 www.tk1sc.com
Project Leader - Jerry Leonhardt
Electrical Lead - Reid Cordry
tk1sc Job #:2019-0228A

DRAWING STATUS
CONSTRUCTION DOCUMENTS

ISSUE

No.	Date	Description
1	10/20/2020	INITIAL PLAN REVIEW
2	01/22/2021	AGENCY RESUBMITTAL
3	03/22/2021	AGENCY RESUBMITTAL

If drawing is not 30" x 42" it is a reduced print

PROJECT
RESIDENTIAL CENTER, UKIAH: REPLACEMENT OF EXISTING RESIDENTIAL CENTER
440 EAST HILL ROAD
WILLITS, CALIFORNIA 95490
MENDOCINO COUNTY
CALIFORNIA CONSERVATION CORP

Supervisor	Designed	Drawn
		Author

DSA Application No.
02-118630

SHEET TITLE
ADMINISTRATION BUILDING FIRE ALARM PLAN

DGS Project Number	NMR Project Number
XXXXX	18-6456

Reference North: NORTH
Sheet Scale: As indicated
Sheet Number: FA201A

ISSUE DATE
July 9, 2021

Plot Date: 3/22/2021 8:46:50 AM
File Name: BIM 360:/CCC Willits Residential Center/E_CCC Willits_ADMIN_2019-0228A.rvt

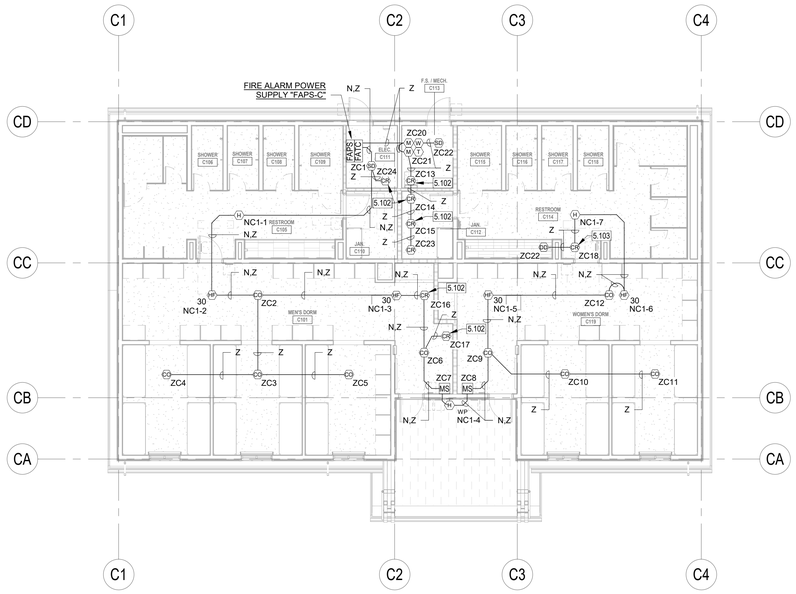

COMET FIRE ALARM PLAN

SCALE: 1/8" = 1'-0"

WALL TYPES LEGEND

SEE SHEET G121 FOR ASSEMBLY TYPES

EXTERIOR

2 x 6 WOOD STUD WALL - NON RATED	0-W1-6 * ● #
2 x 12 WOOD STUD WALL - NON RATED	0-W1-12 * ● #

INTERIOR

2 x 4 WOOD STUD WALL - NON RATED	0-W2-4 * ● #
2 x 6 WOOD STUD WALL - NON RATED	0-W2-6 * ● #
2 x 8 WOOD STUD WALL - NON RATED	0-W2-8 * ● #
2 x 12 WOOD STUD WALL - NON RATED	0-W2-12 * ● #
2 x 4 WOOD STUD WALL - ACOUSTIC	0-W5-4 * ● #
2 x 6 WOOD STUD WALL - ACOUSTIC	0-W5-6 * ● #
2 X 4 WOOD STUD WALL - 1-HR FIRE PARTITION W/ PROTECTED OPENINGS	1-W3-4 * ● #
2 X 6 WOOD STUD WALL - 1-HR FIRE PARTITION W/ PROTECTED OPENINGS	1-W3-6 * ● #

WALL TYPE NOTES

PARTITION SYMBOL

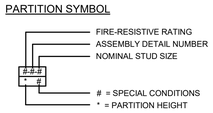

KEYNOTES

5.102 CONNECT AS REQUIRED TO COMBINATION SMOKE/FIRE DAMPER. REFER TO MECHANICAL DRAWINGS FOR EXACT LOCATIONS. CONTRACTOR TO PROVIDE CONTROL RELAY MODULE AT ASSOCIATED HVAC UNIT FOR IMMEDIATE UNIT SHUT DOWN UPON DAMPER CLOSURE PER CMC, SECTION 605.8.

5.103 CONNECT AS REQUIRED TO HVAC UNIT FOR UNIT SHUT-DOWN. REFER TO DETAIL 3, SHEET FA002 FOR ADDITIONAL REQUIREMENTS.

FIRE ALARM PLAN GENERAL NOTES:

1. NOTIFICATION DEVICES IN ROOMS CONTAINING (2) OR MORE AUDIBLE AND/OR (2) OR MORE VISUAL DEVICES SHALL BE SYNCHRONIZED PER N.F.P.A. 72, 2016 EDITION (WITH CALIFORNIA AMENDMENTS) THIS SHALL INCLUDE AUDIBLE AND VISUAL DEVICES LOCATED IN ADJACENT/ADJOINING SPACES.
2. DO NOT DEVIATE FROM CONDUIT RUNS AS SHOWN ON FLOOR PLANS WITHOUT PRIOR APPROVAL FROM SYSTEM SUPPLIER / ENGINEER. FACTORS SUCH AS EXCESSIVE VOLTAGE DROP, ADDITIONAL PARTS, ENGINEERING, ETC. THAT ARE A RESULT OF CONDUIT RUN DEVIATIONS SHALL BE THE SOLE RESPONSIBILITY OF THE CONTRACTOR.
3. DETECTORS SHALL NOT BE LOCATED IN A DIRECT AIR-FLOW, NOR CLOSER THAN 3 FEET (915 mm) FROM ANY AIR SUPPLY DIFFUSER.
4. THE AUDIBLE ALARM NOTIFICATION APPLIANCES SHALL PROVIDE A SOUND PRESSURE LEVEL OF 15 dBA ABOVE THE AVERAGE AMBIENT SOUND LEVEL OR 5 dBA ABOVE THE MAXIMUM SOUND LEVEL HAVING DURATION OF AT LEAST 60 SECONDS, WHICHEVER IS GREATER, IN EVERY OCCUPIABLE SPACE WITHIN THE BUILDING. (2016 CFC 907.5.2.1.1)
5. THE VOICE/ALARM COMMUNICATION SYSTEM VOICE MESSAGE SHALL COMPLY WITH NFPA 72 SECTIONS 18.4 AND 24.4 FOR GENERAL REQUIREMENTS, INTELLIGIBILITY, AUDIBILITY, MESSAGE PRIORITY, TONES, ETC.
6. REFER TO ARCHITECTURAL EXTERIOR ELEVATIONS FOR PRECISE OUTLET LOCATIONS.
7. REFER TO ARCHITECTURAL REFLECTED CEILING PLAN FOR EXACT LOCATION OF ALL CEILING MOUNTED DEVICES.
8. IF SHIELDED WIRE IS USED, THE FOLLOWING MUST BE OBSERVED.
   A. METALLIC CONTINUITY OF THE SHIELD MUST BE MAINTAINED AND INSULATED THROUGHOUT THE ENTIRE LENGTH OF THE CABLE.
   B. THE ENTIRE LENGTH OF THE CABLE MUST HAVE A RESISTANCE GREATER THAN 1 MEGOHM TO EARTH.
9. ALL PENETRATIONS THROUGH FIRE RATED WALLS SHALL BE PROTECTED FROM THE SPREAD OF FIRE WITH AN APPROVED FIRE STOP SYSTEM EQUAL TO OR GREATER THAN THE FIRE RATING OF THE STRUCTURE / SURFACE BEING PENETRATED AS I DENTIFIED IN CBC CHAPTER 7, UL OR OTHER LAB TESTING CRITERIA. APPROVED TYPES OF MATERIALS SHALL BE IDENTIFIED WITHIN THE FIRE ALARM SECTION OF THE PROJECT SPECIFICATIONS.
10. A SYSTEM GROUND MUST BE PROVIDED FOR EARTH DETECTION AND LIGHTNING PROTECTION DEVICES. THIS CONNECTION SHALL BE MADE TO AN APPROVED DEDICATED EARTH CONNECTION PER CEC, ARTICLE 250.
11. WIRING IN DUCTS, PLENUMS AND OTHER AIR HANDLING SPACES MUST BE INSTALLED IN ACCORDANCE WITH CEC 2019.
12. UNDERGROUND WIRING MUST BE FREE OF ALL WATER.
13. ALL FIRE ALARM SYSTEM CONDUCTORS SHALL BE RUN IN A DEDICATED FIRE ALARM CONDUIT SYSTEM.
14. WHERE A DETECTOR IS INDICATED TO BE INSTALLED ABOVE THE CEILING AND NO ACCESS TO THE CEILING SPACE EXISTS, THE ELECTRICAL CONTRACTOR SHALL FURNISH ACCESS PANELS. THE DETECTOR SHALL BE EASILY ACCESSIBLE AND THE LOCATION OF THE DETECTOR SHALL BE CLEARLY MARKED.
15. WIRING OTHER THAN THAT CONNECTED TO ELEVATOR CABS MUST NOT BE RUN IN ELEVATOR SHAFTS (REF. CEC, ARTICLE 620).
16. FIRE ALARM SYSTEM UTILIZES A COMPLETE COVERAGE, FULLY AUTOMATIC SYSTEM. PROVIDE RELAY MODULE(S) AT FATC/FACP LOCATIONS FOR CONTROL OF HVAC SHUT DOWN, SMOKE/FIRE DAMPER CLOSURE AND DOOR HOLD RELEASES.
17. WHERE NEW DEVICES (AND ASSOCIATED CONDUIT) CANNOT PHYSICALLY BE MOUNTED CONCEALED IN WALLS, RUN IN PANDUIT SURFACE RACEWAY/WIREWAY (AND DEVICES SHALL BE MOUNTED ON SURFACE OUTLET BOXES). REFER TO SPECIFICATIONS. PROVIDE SIZE OF RACEWAY TO ACCOMMODATE THE REQUIRED CONDUCTORS. WHERE CONDUIT IS INDICATED, PROVIDE SURFACE RACEWAY WITH AN EQUAL CROSS SECTION TO THE DIAMETER OF THE CONDUIT INDICATED.
18. DETECTOR SENSITIVITY SHALL BE TESTED USING MANUFACTURER'S CALIBRATED SENSITIVITY INSTRUMENT OR OTHER CALIBRATED TESTING METHOD. (CFC 907.8.3)
19. STORAGE BATTERIES SHALL BE PERMANENTLY MARKED WITH THE MONTH AND YEAR OF MAUFACTURE, USING THE MONTH/YEAR FORMAT. THE MARKING SHALL BE PERMITTED TO BE APPLIED BY EITHER THE MANUFACTURER OR THE INSTALLER. WHERE THE BATTERY IS NOT MARKED WITH THE MONTH/YEAR BY THE MANUFACTURER, THE INSTALLER SHALL OBTAIN THE DATE-CODE AND MARK THE BATTERY WITH THE MONTH/YEAR OF BATTERY MANUFACTURE.

COMPLETE FIRE ALARM SUBMITTAL

MANUAL ADDRESSABLE FIRE ALARM SYSTEM

IDENTIFICATION STAMP
DIV. OF THE STATE ARCHITECT
APP: 02-118630 INC:
REVIEWED FOR
SS ☐ FLS ☐ ACS ☑
DATE: 04/13/2021

OFFICE OF THE STATE FIRE MARSHAL
APPROVED FIRE AND PANIC ONLY
Approval of this plan does not authorize or approve any omission or deviation from applicable regulations. Final approval is subject to field inspection. One set of approved plans shall be available on the project site at all times.
PERMIT NO: 26-N-2532-CP
REVIEWED BY: LEO CATAYLO, OSFM
DATE: 4/1/2021

GENERAL SERVICES
Department of General Services
State of California
Real Estate Services Division
Project Management & Development Branch
707 Third Street, Suite 4-105
West Sacramento, California 95605

NICHOLS MELBURG & ROSSETTO
ARCHITECTS + ENGINEERS
300 Knollcrest Drive
Redding, CA. 96002
(530) 222-3300 (530) 222-3538 FAX
http://www.nmrdesign.com

Copyright © 2019
All ideas, designs, arrangements and plans indicated or represented by this drawing are owned by, and the property of, NICHOLS, MELBURG and ROSSETTO and were created, evolved and developed for use on, and in connection with, the specified project. None of such ideas, designs, arrangements or plans shall be used by, or disclosed to any person, firm or corporation for any purpose whatsoever without the written permission of NICHOLS, MELBURG and ROSSETTO.

LICENSE STAMPS

REGISTERED PROFESSIONAL ENGINEER RAYMOND W. SWAN No. E15610 12/31/2021 ELECTRICAL STATE OF CALIFORNIA
Date Signed: 3/25/2021

CONSULTANT
tklsc COLLABORATIVE
11870 Pierce Street, Suite 160
Riverside, California 92505
951.299.4160 www.tk1sc.com
Project Leader - Jerry Leonhardt
Electrical Lead - Reid Cordry
tk1sc Job #:2019-0228A

DRAWING STATUS
CONSTRUCTION DOCUMENTS

ISSUE

No.	Date	Description
1	10/20/2020	INITIAL PLAN REVIEW
2	01/22/2021	AGENCY RESUBMITTAL
3	03/22/2021	AGENCY RESUBMITTAL

If drawing is not 30" x 42" it is a reduced print

PROJECT
RESIDENTIAL CENTER, UKIAH: REPLACEMENT OF EXISTING RESIDENTIAL CENTER
440 EAST HILL ROAD
WILLITS, CALIFORNIA 95490
MENDOCINO COUNTY
CALIFORNIA CONSERVATION CORP

Supervisor	Designed	Drawn
		Author

DSA Application No.
XX-XXXXXX

SHEET TITLE
COMET FIRE ALARM PLAN

DGS Project Number	NMR Project Number
XXXXX	18-6456

Reference North
Sheet Scale: As indicated
Sheet Number: FA201C

ISSUE DATE
July 9, 2021

Plot Date: 3/22/2021 8:51:09 AM
File Name: BIM 360://CCC Willits Residential Center/E_CCC Willits_COMET_2019-0228A.rvt

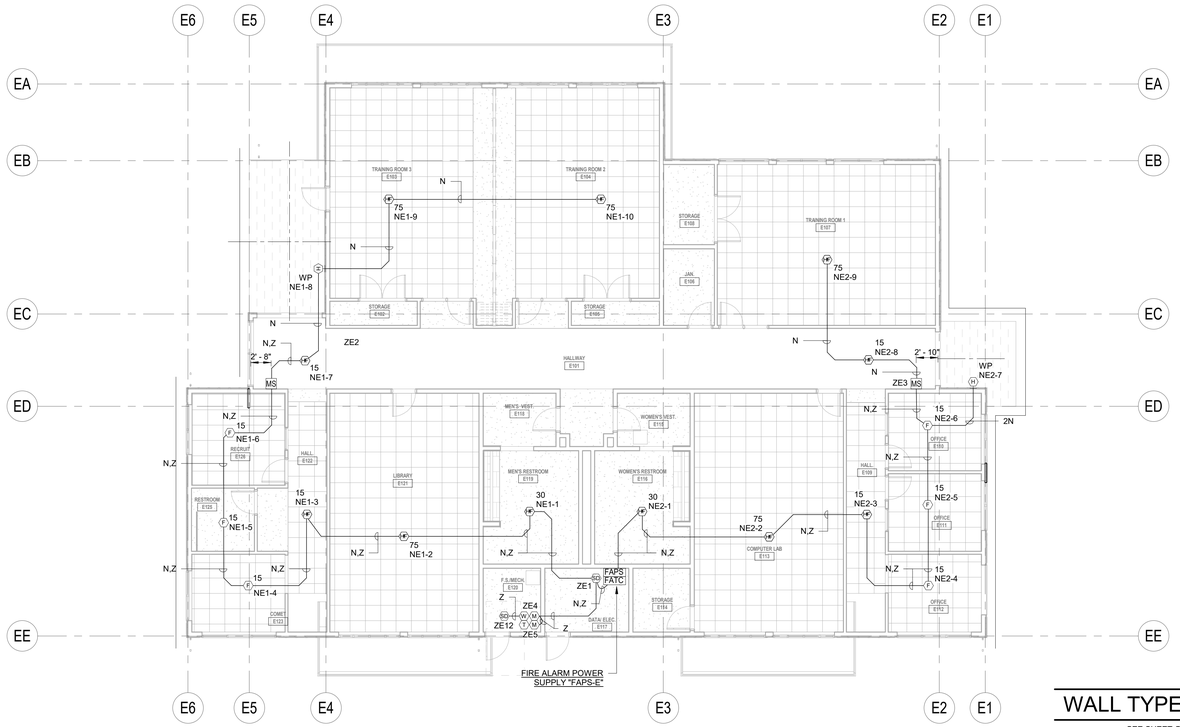

NORTH

EDUCATION BUILDING FIRE ALARM PLAN

SCALE: 1/8" = 1'-0"

WALL TYPES LEGEND

SEE SHEET G121 FOR ASSEMBLY TYPES

EXTERIOR

2 x 6 WOOD STUD WALL - NON RATED	0-W1-6 * ● #
2 x 12 WOOD STUD WALL - NON RATED	0-W1-12 * ● #

INTERIOR

2 x 4 WOOD STUD WALL - NON RATED	0-W2-4 * ● #
2 x 6 WOOD STUD WALL - NON RATED	0-W2-6 * ● #
2 x 8 WOOD STUD WALL - NON RATED	0-W2-8 * ● #
2 x 12 WOOD STUD WALL - NON RATED	0-W2-12 * ● #
2 x 4 WOOD STUD WALL - ACOUSTIC	0-W5-4 * ● #
2 x 6 WOOD STUD WALL - ACOUSTIC	0-W5-6 * ● #
2 X 4 WOOD STUD WALL - 1-HR FIRE PARTITION W/ PROTECTED OPENINGS	1-W3-4 * ● #
2 X 6 WOOD STUD WALL - 1-HR FIRE PARTITION W/ PROTECTED OPENINGS	1-W3-6 * ● #

WALL TYPE NOTES

PARTITION SYMBOL

- FIRE-RESISTIVE RATING
- ASSEMBLY DETAIL NUMBER
- NOMINAL STUD SIZE

#-#-#
* ●

- # = SPECIAL CONDITIONS
- * = PARTITION HEIGHT

FIRE ALARM PLAN GENERAL NOTES:

1. NOTIFICATION DEVICES IN ROOMS CONTAINING (2) OR MORE AUDIBLE AND/OR (2) OR MORE VISUAL DEVICES SHALL BE SYNCHRONIZED PER N.F.P.A. 72, 2016 EDITION (WITH CALIFORNIA AMENDMENTS) THIS SHALL INCLUDE AUDIBLE AND VISUAL DEVICES LOCATED IN ADJACENT/ADJOINING SPACES.
2. DO NOT DEVIATE FROM CONDUIT RUNS AS SHOWN ON FLOOR PLANS WITHOUT PRIOR APPROVAL FROM SYSTEM SUPPLIER / ENGINEER. FACTORS SUCH AS EXCESSIVE VOLTAGE DROP, ADDITIONAL PARTS, ENGINEERING, ETC. THAT ARE A RESULT OF CONDUIT RUN DEVIATIONS SHALL BE THE SOLE RESPONSIBILITY OF THE CONTRACTOR.
3. DETECTORS SHALL NOT BE LOCATED IN A DIRECT AIR-FLOW, NOR CLOSER THAN 3 FEET (915 mm) FROM ANY AIR SUPPLY DIFFUSER.
4. THE AUDIBLE ALARM NOTIFICATION APPLIANCES SHALL PROVIDE A SOUND PRESSURE LEVEL OF 15 dBA ABOVE THE AVERAGE AMBIENT SOUND LEVEL OR 5 dBA ABOVE THE MAXIMUM SOUND LEVEL HAVING DURATION OF AT LEAST 60 SECONDS, WHICHEVER IS GREATER, IN EVERY OCCUPIABLE SPACE WITHIN THE BUILDING. (2016 CFC 907.5.2.1.1)
5. THE VOICE/ALARM COMMUNICATION SYSTEM VOICE MESSAGE SHALL COMPLY WITH NFPA 72 SECTIONS 18.4 AND 24.4 FOR GENERAL REQUIREMENTS, INTELLIGIBILITY, AUDIBILITY, MESSAGE PRIORITY, TONES, ETC.
6. REFER TO ARCHITECTURAL EXTERIOR ELEVATIONS FOR PRECISE OUTLET LOCATIONS.
7. REFER TO ARCHITECTURAL REFLECTED CEILING PLAN FOR EXACT LOCATION OF ALL CEILING MOUNTED DEVICES.
8. IF SHIELDED WIRE IS USED, THE FOLLOWING MUST BE OBSERVED.
   A. METALLIC CONTINUITY OF THE SHIELD MUST BE MAINTAINED AND INSULATED THROUGHOUT THE ENTIRE LENGTH OF THE CABLE.
   B. THE ENTIRE LENGTH OF THE CABLE MUST HAVE A RESISTANCE GREATER THAN 1 MEGOHM TO EARTH.
9. ALL PENETRATIONS THROUGH FIRE RATED WALLS SHALL BE PROTECTED FROM THE SPREAD OF FIRE WITH AN APPROVED FIRE STOP SYSTEM EQUAL TO OR GREATER THAN THE FIRE RATING OF THE STRUCTURE / SURFACE BEING PENETRATED AS I DENTIFIED IN CBC CHAPTER 7, UL OR OTHER LAB TESTING CRITERIA. APPROVED TYPES OF MATERIALS SHALL BE IDENTIFIED WITHIN THE FIRE ALARM SECTION OF THE PROJECT SPECIFICATIONS.
10. A SYSTEM GROUND MUST BE PROVIDED FOR EARTH DETECTION AND LIGHTNING PROTECTION DEVICES. THIS CONNECTION SHALL BE MADE TO AN APPROVED DEDICATED EARTH CONNECTION PER CEC, ARTICLE 250.
11. WIRING IN DUCTS, PLENUMS AND OTHER AIR HANDLING SPACES MUST BE INSTALLED IN ACCORDANCE WITH CEC 2019.
12. UNDERGROUND WIRING MUST BE FREE OF ALL WATER.
13. ALL FIRE ALARM SYSTEM CONDUCTORS SHALL BE RUN IN A DEDICATED FIRE ALARM CONDUIT SYSTEM.
14. WHERE A DETECTOR IS INDICATED TO BE INSTALLED ABOVE THE CEILING AND NO ACCESS TO THE CEILING SPACE EXISTS, THE ELECTRICAL CONTRACTOR SHALL FURNISH ACCESS PANELS. THE DETECTOR SHALL BE EASILY ACCESSIBLE AND THE LOCATION OF THE DETECTOR SHALL BE CLEARLY MARKED.
15. WIRING OTHER THAN THAT CONNECTED TO ELEVATOR CABS MUST NOT BE RUN IN ELEVATOR SHAFTS (REF. CEC, ARTICLE 620).
16. FIRE ALARM SYSTEM UTILIZES A COMPLETE COVERAGE, FULLY AUTOMATIC SYSTEM. PROVIDE RELAY MODULE(S) AT FATC/FACP LOCATIONS FOR CONTROL OF HVAC SHUT DOWN, SMOKE/FIRE DAMPER CLOSURE AND DOOR HOLD RELEASES.
17. WHERE NEW DEVICES (AND ASSOCIATED CONDUIT) CANNOT PHYSICALLY BE MOUNTED CONCEALED IN WALLS, RUN IN PANDUIT SURFACE RACEWAY/WIREWAY (AND DEVICES SHALL BE MOUNTED ON SURFACE OUTLET BOXES). REFER TO SPECIFICATIONS. PROVIDE SIZE OF RACEWAY TO ACCOMMODATE THE REQUIRED CONDUCTORS. WHERE CONDUIT IS INDICATED, PROVIDE SURFACE RACEWAY WITH AN EQUAL CROSS SECTION TO THE DIAMETER OF THE CONDUIT IINDICATED.
18. DETECTOR SENSITIVITY SHALL BE TESTED USING MANUFACTURER'S CALIBRATED SENSITIVITY INSTRUMENT OR OTHER CALIBRATED TESTING METHOD. (CFC 907.8.3)
19. STORAGE BATTERIES SHALL BE PERMANENTLY MARKED WITH THE MONTH AND YEAR OF MAUFACTURE, USING THE MONTH/YEAR FORMAT. THE MARKING SHALL BE PERMITTED TO BE APPLIED BY EITHER THE MANUFACTURER OR THE INSTALLER. WHERE THE BATTERY IS NOT MARKED WITH THE MONTH/YEAR BY THE MANUFACTURER, THE INSTALLER SHALL OBTAIN THE DATE-CODE AND MARK THE BATTERY WITH THE MONTH/YEAR OF BATTERY MANUFACTURE.

COMPLETE FIRE ALARM SUBMITTAL

MANUAL ADDRESSABLE FIRE ALARM SYSTEM

IDENTIFICATION STAMP
DIV. OF THE STATE ARCHITECT
APP: 02-118630 INC:
REVIEWED FOR
SS ☐ FLS ☐ ACS ☑
DATE: 04/13/2021

OFFICE OF THE STATE FIRE MARSHAL
APPROVED FIRE AND PANIC ONLY
Approval of this plan does not authorize or approve any omission or deviation from applicable regulations. Final approval is subject to field inspection. One set of approved plans shall be available on the project site at all times.
PERMIT NO: 28 N 2332-CP
REVIEWED BY: LEO CATAYLO, OSFM
DATE: 4/ 1 /2021

GENERAL SERVICES
Department of General Services
State of California
Real Estate Services Division
Project Management & Development Branch
707 Third Street, Suite 4-105
West Sacramento, California 95605

NICHOLS MELBURG & ROSSETTO
ARCHITECTS + ENGINEERS
300 Knollcrest Drive
Redding, CA. 96002
(530) 222-3300 (530) 222-3538 FAX
http://www.nmrdesign.com

Copyright © 2019
All ideas, designs, arrangements and plans indicated or represented by this drawing are owned by, and the property of, NICHOLS, MELBURG and ROSSETTO and were created, evolved and developed for use on, and in connection with, the specified project. None of such ideas, designs, arrangements or plans shall be used by, or disclosed to any person, firm or corporation for any purpose whatsoever without the written permission of NICHOLS, MELBURG and ROSSETTO.

LICENSE STAMPS

REGISTERED PROFESSIONAL ENGINEER RAYMOND W. SWEETZ No. E15610 12/31/2021 ELECTRICAL STATE OF CALIFORNIA
Date Signed: 3/25/2021

CONSULTANT
tklsc COLLABORATIVE
11870 Pierce Street, Suite 160
Riverside, California 92505
951.299.4160 www.tk1sc.com
Project Leader - Jerry Leonhardt
Electrical Lead - Reid Cordry
tk1sc Job #:2019-0228A

DRAWING STATUS
CONSTRUCTION DOCUMENTS

ISSUE

No.	Date	Description
1	10/20/2020	INITIAL PLAN REVIEW
2	01/22/2021	AGENCY RESUBMITTAL
3	03/22/2021	AGENCY RESUBMITTAL

If drawing is not 30" x 42" it is a reduced print

PROJECT
RESIDENTIAL CENTER, UKIAH: REPLACEMENT OF EXISTING RESIDENTIAL CENTER
440 EAST HILL ROAD
WILLITS, CALIFORNIA 95490
MENDOCINO COUNTY
CALIFORNIA CONSERVATION CORP

Supervisor	Designed	Drawn
		Author

DSA Application No.
XX-XXXXXX

SHEET TITLE
EDUCATION BUILDING FIRE ALARM PLAN

DGS Project Number	NMR Project Number
XXXXX	18-6456

Reference North: NORTH
Sheet Scale: As indicated
Sheet Number: FA201E

ISSUE DATE
July 9, 2021

Plot Date: 3/22/2021 9:16:14 AM
File Name: BIM 360://CCC Willits Residential Center/E_CCC Willits_ED_2019-0228A.rvt

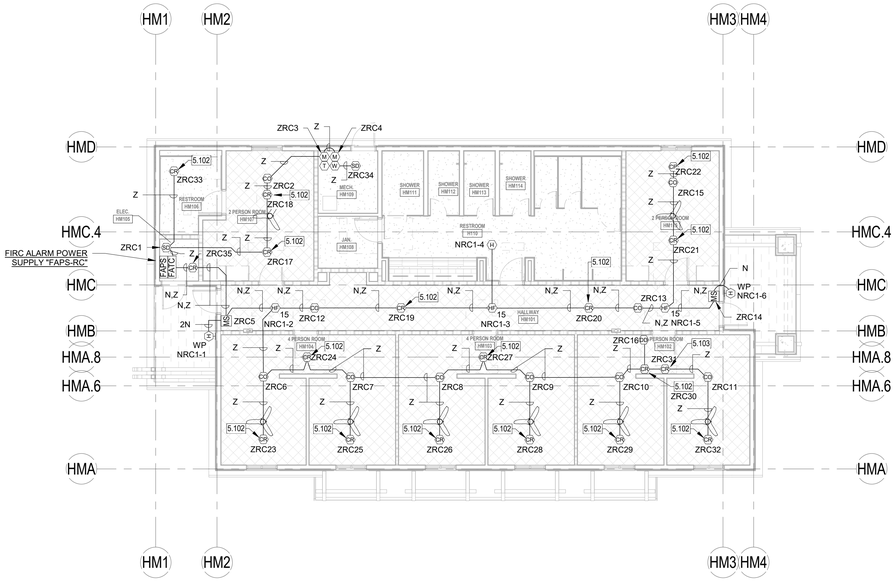

MEN'S HOUSING FIRE ALARM PLAN

SCALE: 1/8" = 1'-0"

KEYNOTES

5.102 CONNECT AS REQUIRED TO COMBINATION SMOKE/FIRE DAMPER. REFER TO MECHANICAL DRAWINGS FOR EXACT LOCATIONS. CONTRACTOR TO PROVIDE CONTROL RELAY MODULE AT ASSOCIATED HVAC UNIT FOR IMMEDIATE UNIT SHUT DOWN UPON DAMPER CLOSURE PER CMC, SECTION 605.8.

5.103 CONNECT AS REQUIRED TO HVAC UNIT FOR UNIT SHUT-DOWN. REFER TO DETAIL 3, SHEET FA002 FOR ADDITIONAL REQUIREMENTS.

FIRE ALARM PLAN GENERAL NOTES:

1. NOTIFICATION DEVICES IN ROOMS CONTAINING (2) OR MORE AUDIBLE AND/OR (2) OR MORE VISUAL DEVICES SHALL BE SYNCHRONIZED PER N.F.P.A. 72, 2016 EDITION (WITH CALIFORNIA AMENDMENTS) THIS SHALL INCLUDE AUDIBLE AND VISUAL DEVICES LOCATED IN ADJACENT/ADJOINING SPACES.
2. DO NOT DEVIATE FROM CONDUIT RUNS AS SHOWN ON FLOOR PLANS WITHOUT PRIOR APPROVAL FROM SYSTEM SUPPLIER / ENGINEER. FACTORS SUCH AS EXCESSIVE VOLTAGE DROP, ADDITIONAL PARTS, ENGINEERING, ETC. THAT ARE A RESULT OF CONDUIT RUN DEVIATIONS SHALL BE THE SOLE RESPONSIBILITY OF THE CONTRACTOR.
3. DETECTORS SHALL NOT BE LOCATED IN A DIRECT AIR-FLOW, NOR CLOSER THAN 3 FEET (915 mm) FROM ANY AIR SUPPLY DIFFUSER.
4. THE AUDIBLE ALARM NOTIFICATION APPLIANCES SHALL PROVIDE A SOUND PRESSURE LEVEL OF 15 dBA ABOVE THE AVERAGE AMBIENT SOUND LEVEL OR 5 dBA ABOVE THE MAXIMUM SOUND LEVEL HAVING DURATION OF AT LEAST 60 SECONDS, WHICHEVER IS GREATER, IN EVERY OCCUPIABLE SPACE WITHIN THE BUILDING. (2016 CFC 907.5.2.1.1)
5. THE VOICE/ALARM COMMUNICATION SYSTEM VOICE MESSAGE SHALL COMPLY WITH NFPA 72 SECTIONS 18.4 AND 24.4 FOR GENERAL REQUIREMENTS, INTELLIGIBILITY, AUDIBILITY, MESSAGE PRIORITY, TONES, ETC.
6. REFER TO ARCHITECTURAL EXTERIOR ELEVATIONS FOR PRECISE OUTLET LOCATIONS.
7. REFER TO ARCHITECTURAL REFLECTED CEILING PLAN FOR EXACT LOCATION OF ALL CEILING MOUNTED DEVICES.
8. IF SHIELDED WIRE IS USED, THE FOLLOWING MUST BE OBSERVED.
   A. METALLIC CONTINUITY OF THE SHIELD MUST BE MAINTAINED AND INSULATED THROUGHOUT THE ENTIRE LENGTH OF THE CABLE
   B. THE ENTIRE LENGTH OF THE CABLE MUST HAVE A RESISTANCE GREATER THAN 1 MEGOHM TO EARTH.
9. ALL PENETRATIONS THROUGH FIRE RATED WALLS SHALL BE PROTECTED FROM THE SPREAD OF FIRE WITH AN APPROVED FIRE STOP SYSTEM EQUAL TO OR GREATER THAN THE FIRE RATING OF THE STRUCTURE / SURFACE BEING PENETRATED AS I DENTIFIED IN CBC CHAPTER 7, UL OR OTHER LAB TESTING CRITERIA. APPROVED TYPES OF MATERIALS SHALL BE IDENTIFIED WITHIN THE FIRE ALARM SECTION OF THE PROJECT SPECIFICATIONS.
10. A SYSTEM GROUND MUST BE PROVIDED FOR EARTH DETECTION AND LIGHTNING PROTECTION DEVICES. THIS CONNECTION SHALL BE MADE TO AN APPROVED DEDICATED EARTH CONNECTION PER CEC, ARTICLE 250.
11. WIRING IN DUCTS, PLENUMS AND OTHER AIR HANDLING SPACES MUST BE INSTALLED IN ACCORDANCE WITH CEC 2019.
12. UNDERGROUND WIRING MUST BE FREE OF ALL WATER.
13. ALL FIRE ALARM SYSTEM CONDUCTORS SHALL BE RUN IN A DEDICATED FIRE ALARM CONDUIT SYSTEM.
14. WHERE A DETECTOR IS INDICATED TO BE INSTALLED ABOVE THE CEILING AND NO ACCESS TO THE CEILING SPACE EXISTS, THE ELECTRICAL CONTRACTOR SHALL FURNISH ACCESS PANELS. THE DETECTOR SHALL BE EASILY ACCESSIBLE AND THE LOCATION OF THE DETECTOR SHALL BE CLEARLY MARKED.
15. WIRING OTHER THAN THAT CONNECTED TO ELEVATOR CABS MUST NOT BE RUN IN ELEVATOR SHAFTS (REF. CEC, ARTICLE 620).
16. FIRE ALARM SYSTEM UTILIZES A COMPLETE COVERAGE, FULLY AUTOMATIC SYSTEM. PROVIDE RELAY MODULE(S) AT FATC/FACP LOCATIONS FOR CONTROL OF HVAC SHUT DOWN, SMOKE/FIRE DAMPER CLOSURE AND DOOR HOLD RELEASES.
17. WHERE NEW DEVICES (AND ASSOCIATED CONDUIT) CANNOT PHYSICALLY BE MOUNTED CONCEALED IN WALLS, RUN IN PANDUIT SURFACE RACEWAY/WIREWAY (AND DEVICES SHALL BE MOUNTED ON SURFACE OUTLET BOXES). REFER TO SPECIFICATIONS. PROVIDE SIZE OF RACEWAY TO ACCOMMODATE THE REQUIRED CONDUCTORS. WHERE CONDUIT IS INDICATED, PROVIDE SURFACE RACEWAY WITH AN EQUAL CROSS SECTION TO THE DIAMETER OF THE CONDUIT INDICATED.
18. DETECTOR SENSITIVITY SHALL BE TESTED USING MANUFACTURER'S CALIBRATED SENSITIVITY INSTRUMENT OR OTHER CALIBRATED TESTING METHOD. (CFC 907.8.3)
19. STORAGE BATTERIES SHALL BE PERMANENTLY MARKED WITH THE MONTH AND YEAR OF MAUFACTURE, USING THE MONTH/YEAR FORMAT. THE MARKING SHALL BE PERMITTED TO BE APPLIED BY EITHER THE MANUFACTURER OR THE INSTALLER. WHERE THE BATTERY IS NOT MARKED WITH THE MONTH/YEAR BY THE MANUFACTURER, THE INSTALLER SHALL OBTAIN THE DATE-CODE AND MARK THE BATTERY WITH THE MONTH/YEAR OF BATTERY MANUFACTURE.

WALL TYPES LEGEND

SEE SHEET G121 FOR ASSEMBLY TYPES

EXTERIOR

2 x 6 WOOD STUD WALL - NON RATED	0-W1-6 * ♦ #
2 x 12 WOOD STUD WALL - NON RATED	0-W1-12 * ♦ #

INTERIOR

2 x 4 WOOD STUD WALL - NON RATED	0-W2-4 * ♦ #
2 x 6 WOOD STUD WALL - NON RATED	0-W2-6 * ♦ #
2 x 8 WOOD STUD WALL - NON RATED	0-W2-8 * ♦ #
2 x 12 WOOD STUD WALL - NON RATED	0-W2-12 * ♦ #
2 x 4 WOOD STUD WALL - ACOUSTIC	0-W5-4 * ♦ #
2 x 6 WOOD STUD WALL - ACOUSTIC	0-W5-6 * ♦ #
2 X 4 WOOD STUD WALL - 1-HR FIRE PARTITION W/ PROTECTED OPENINGS	1-W3-4 * ♦ #
2 X 6 WOOD STUD WALL - 1-HR FIRE PARTITION W/ PROTECTED OPENINGS	1-W3-6 * ♦ #

WALL TYPE NOTES

PARTITION SYMBOL

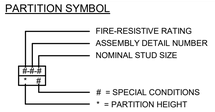

COMPLETE FIRE ALARM SUBMITTAL

MANUAL ADDRESSABLE FIRE ALARM SYSTEM

IDENTIFICATION STAMP
DIV. OF THE STATE ARCHITECT
APP: 02-118630 INC:
REVIEWED FOR
SS ☐ FLS ☐ ACS ☑
DATE: 04/13/2021

OFFICE OF THE STATE FIRE MARSHAL
APPROVED FIRE AND PANIC ONLY
Approval of this plan does not authorize or approve any omission or deviation from applicable regulations. Final approval is subject to field inspection. One set of approved plans shall be available on the project site at all times.
PERMIT NO: 20-N-2332-CP
REVIEWED BY: LEO CATAYLO, OSFM
DATE: 4 / 1 /2021

GENERAL SERVICES
Department of General Services
State of California
Real Estate Services Division
Project Management & Development Branch
707 Third Street, Suite 4-105
West Sacramento, California 95605

NICHOLS MELBURG & ROSSETTO ARCHITECTS + ENGINEERS
300 Knollcrest Drive
Redding, CA. 96002
(530) 222-3300 (530) 222-3538 FAX
http://www.nmrdesign.com

Copyright © 2019
All ideas, designs, arrangements and plans indicated or represented by this drawing are owned by, and the property of, NICHOLS, MELBURG and ROSSETTO and were created, evolved and developed for use on, and in connection with, the specified project. None of such ideas, designs, arrangements or plans shall be used by, or disclosed to any person, firm or corporation for any purpose whatsoever without the written permission of NICHOLS, MELBURG and ROSSETTO.

LICENSE STAMPS

REGISTERED PROFESSIONAL ENGINEER RAYMOND W. SWIFT No. E15610 EXP. 12/31/2021 ELECTRICAL STATE OF CALIFORNIA
Date Signed: 3/25/2021

CONSULTANT

tk1sc COLLABORATIVE
11870 Pierce Street, Suite 160
Riverside, California 92505
951.299.4160 www.tk1sc.com
Project Leader - Jerry Leonhardt
Electrical Lead - Reid Cordry
tk1sc Job #:2019-0228A

DRAWING STATUS
CONSTRUCTION DOCUMENTS

ISSUE

No.	Date	Description
1	10/20/2020	INITIAL PLAN REVIEW
2	01/22/2021	AGENCY RESUBMITTAL
3	03/22/2021	AGENCY RESUBMITTAL

If drawing is not 30" x 42" it is a reduced print

PROJECT
RESIDENTIAL CENTER, UKIAH: REPLACEMENT OF EXISTING RESIDENTIAL CENTER
440 EAST HILL ROAD
WILLITS, CALIFORNIA 95490
MENDOCINO COUNTY
CALIFORNIA CONSERVATION CORPS

Supervisor	Designed	Drawn
		Author

DSA Application No.
XX-XXXXXX

SHEET TITLE
MEN'S HOUSING FIRE ALARM PLAN

DGS Project Number	NMR Project Number
0000000000001826	18-6456

Reference North | Sheet Scale: As indicated
Sheet Number: FA201HM

ISSUE DATE
July 9, 2021

Plot Date: 3/22/2021 9:07:41 AM
File Name: BIM 360://CCC Willits Residential Center/E_CCC Willits_DORM-MEN_2019-0228A.rvt

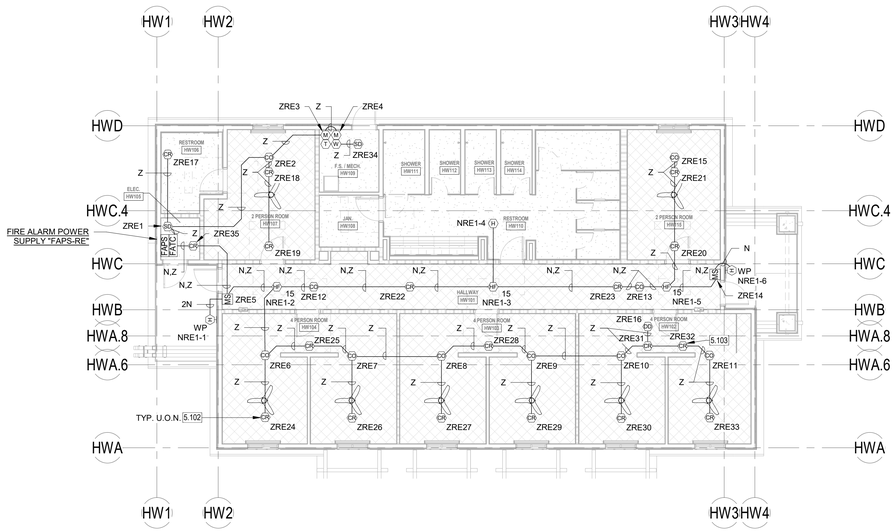

WOMEN'S HOUSING FIRE ALARM PLAN

SCALE: 1/8" = 1'-0"

KEYNOTES

5.102 CONNECT AS REQUIRED TO COMBINATION SMOKE/FIRE DAMPER. REFER TO MECHANICAL DRAWINGS FOR EXACT LOCATIONS. CONTRACTOR TO PROVIDE CONTROL RELAY MODULE AT ASSOCIATED HVAC UNIT FOR IMMEDIATE UNIT SHUT DOWN UPON DAMPER CLOSURE PER CMC, SECTION 605.8.

5.103 CONNECT AS REQUIRED TO HVAC UNIT FOR UNIT SHUT-DOWN. REFER TO DETAIL 3, SHEET FA002 FOR ADDITIONAL REQUIREMENTS.

FIRE ALARM PLAN GENERAL NOTES:

1. NOTIFICATION DEVICES IN ROOMS CONTAINING (2) OR MORE AUDIBLE AND/OR (2) OR MORE VISUAL DEVICES SHALL BE SYNCHRONIZED PER N.F.P.A. 72, 2016 EDITION (WITH CALIFORNIA AMENDMENTS) THIS SHALL INCLUDE AUDIBLE AND VISUAL DEVICES LOCATED IN ADJACENT/ADJOINING SPACES.
2. DO NOT DEVIATE FROM CONDUIT RUNS AS SHOWN ON FLOOR PLANS WITHOUT PRIOR APPROVAL FROM SYSTEM SUPPLIER / ENGINEER. FACTORS SUCH AS EXCESSIVE VOLTAGE DROP, ADDITIONAL PARTS, ENGINEERING, ETC. THAT ARE A RESULT OF CONDUIT RUN DEVIATIONS SHALL BE THE SOLE RESPONSIBILITY OF THE CONTRACTOR.
3. DETECTORS SHALL NOT BE LOCATED IN A DIRECT AIR-FLOW, NOR CLOSER THAN 3 FEET (915 mm) FROM ANY AIR SUPPLY DIFFUSER.
4. THE AUDIBLE ALARM NOTIFICATION APPLIANCES SHALL PROVIDE A SOUND PRESSURE LEVEL OF 15 dBA ABOVE THE AVERAGE AMBIENT SOUND LEVEL OR 5 dBA ABOVE THE MAXIMUM SOUND LEVEL HAVING DURATION OF AT LEAST 60 SECONDS, WHICHEVER IS GREATER, IN EVERY OCCUPIABLE SPACE WITHIN THE BUILDING. (2016 CFC 907.5.2.1.1)
5. THE VOICE/ALARM COMMUNICATION SYSTEM VOICE MESSAGE SHALL COMPLY WITH NFPA 72 SECTIONS 18.4 AND 24.4 FOR GENERAL REQUIREMENTS, INTELLIGIBILITY, AUDIBILITY, MESSAGE PRIORITY, TONES, ETC.
6. REFER TO ARCHITECTURAL EXTERIOR ELEVATIONS FOR PRECISE OUTLET LOCATIONS.
7. REFER TO ARCHITECTURAL REFLECTED CEILING PLAN FOR EXACT LOCATION OF ALL CEILING MOUNTED DEVICES.
8. IF SHIELDED WIRE IS USED, THE FOLLOWING MUST BE OBSERVED.
   A. METALLIC CONTINUITY OF THE SHIELD MUST BE MAINTAINED AND INSULATED THROUGHOUT THE ENTIRE LENGTH OF THE CABLE.
   B. THE ENTIRE LENGTH OF THE CABLE MUST HAVE A RESISTANCE GREATER THAN 1 MEGOHM TO EARTH.
9. ALL PENETRATIONS THROUGH FIRE RATED WALLS SHALL BE PROTECTED FROM THE SPREAD OF FIRE WITH AN APPROVED FIRE STOP SYSTEM EQUAL TO OR GREATER THAN THE FIRE RATING OF THE STRUCTURE / SURFACE BEING PENETRATED AS I DENTIFIED IN CBC CHAPTER 7, UL OR OTHER LAB TESTING CRITERIA. APPROVED TYPES OF MATERIALS SHALL BE IDENTIFIED WITHIN THE FIRE ALARM SECTION OF THE PROJECT SPECIFICATIONS.
10. A SYSTEM GROUND MUST BE PROVIDED FOR EARTH DETECTION AND LIGHTNING PROTECTION DEVICES. THIS CONNECTION SHALL BE MADE TO AN APPROVED DEDICATED EARTH CONNECTION PER CEC, ARTICLE 250.
11. WIRING IN DUCTS, PLENUMS AND OTHER AIR HANDLING SPACES MUST BE INSTALLED IN ACCORDANCE WITH CEC 2019.
12. UNDERGROUND WIRING MUST BE FREE OF ALL WATER.
13. ALL FIRE ALARM SYSTEM CONDUCTORS SHALL BE RUN IN A DEDICATED FIRE ALARM CONDUIT SYSTEM.
14. WHERE A DETECTOR IS INDICATED TO BE INSTALLED ABOVE THE CEILING AND NO ACCESS TO THE CEILING SPACE EXISTS, THE ELECTRICAL CONTRACTOR SHALL FURNISH ACCESS PANELS. THE DETECTOR SHALL BE EASILY ACCESSIBLE AND THE LOCATION OF THE DETECTOR SHALL BE CLEARLY MARKED.
15. WIRING OTHER THAN THAT CONNECTED TO ELEVATOR CABS MUST NOT BE RUN IN ELEVATOR SHAFTS (REF. CEC, ARTICLE 620).
16. FIRE ALARM SYSTEM UTILIZES A COMPLETE COVERAGE, FULLY AUTOMATIC SYSTEM. PROVIDE RELAY MODULE(S) AT FATC/FACP LOCATIONS FOR CONTROL OF HVAC SHUT DOWN, SMOKE/FIRE DAMPER CLOSURE AND DOOR HOLD RELEASES.
17. WHERE NEW DEVICES (AND ASSOCIATED CONDUIT) CANNOT PHYSICALLY BE MOUNTED CONCEALED IN WALLS, RUN IN PANDUIT SURFACE RACEWAY/WIREWAY (AND DEVICES SHALL BE MOUNTED ON SURFACE OUTLET BOXES). REFER TO SPECIFICATIONS. PROVIDE SIZE OF RACEWAY TO ACCOMMODATE THE REQUIRED CONDUCTORS. WHERE CONDUIT IS INDICATED, PROVIDE SURFACE RACEWAY WITH AN EQUAL CROSS SECTION TO THE DIAMETER OF THE CONDUIT INDICATED.
18. DETECTOR SENSITIVITY SHALL BE TESTED USING MANUFACTURER'S CALIBRATED SENSITIVITY INSTRUMENT OR OTHER CALIBRATED TESTING METHOD. (CFC 907.8.3)
19. STORAGE BATTERIES SHALL BE PERMANENTLY MARKED WITH THE MONTH AND YEAR OF MAUFACTURE, USING THE MONTH/YEAR FORMAT. THE MARKING SHALL BE PERMITTED TO BE APPLIED BY EITHER THE MANUFACTURER OR THE INSTALLER. WHERE THE BATTERY IS NOT MARKED WITH THE MONTH/YEAR BY THE MANUFACTURER, THE INSTALLER SHALL OBTAIN THE DATE-CODE AND MARK THE BATTERY WITH THE MONTH/YEAR OF BATTERY MANUFACTURE.

COMPLETE FIRE ALARM SUBMITTAL

MANUAL ADDRESSABLE FIRE ALARM SYSTEM

WALL TYPES LEGEND

SEE SHEET G121 FOR ASSEMBLY TYPES

EXTERIOR

2 x 6 WOOD STUD WALL - NON RATED	0-W1-6 * ● #
2 x 12 WOOD STUD WALL - NON RATED	0-W1-12 * ● #

INTERIOR

2 x 4 WOOD STUD WALL - NON RATED	0-W2-4 * ● #
2 x 6 WOOD STUD WALL - NON RATED	0-W2-6 * ● #
2 x 8 WOOD STUD WALL - NON RATED	0-W2-8 * ● #
2 x 12 WOOD STUD WALL - NON RATED	0-W2-12 * ● #
2 x 4 WOOD STUD WALL - ACOUSTIC	0-W5-4 * ● #
2 x 6 WOOD STUD WALL - ACOUSTIC	0-W5-6 * ● #
2 X 4 WOOD STUD WALL - 1-HR FIRE PARTITION W/ PROTECTED OPENINGS	1-W3-4 * ● #
2 X 6 WOOD STUD WALL - 1-HR FIRE PARTITION W/ PROTECTED OPENINGS	1-W3-6 * ● #

WALL TYPE NOTES

PARTITION SYMBOL

FIRE-RESISTIVE RATING
ASSEMBLY DETAIL NUMBER
NOMINAL STUD SIZE

1-W-#
* ● #

= SPECIAL CONDITIONS
* = PARTITION HEIGHT

IDENTIFICATION STAMP
DIV. OF THE STATE ARCHITECT
APP: 02-118630 INC:
REVIEWED FOR
SS ☐ FLS ☐ ACS ☑
DATE: 04/13/2021

OFFICE OF THE STATE FIRE MARSHAL
APPROVED FIRE AND PANIC ONLY
Approval of this plan does not authorize or approve any omission or deviation from applicable regulations. Final approval is subject to field inspection. One set of approved plans shall be available on the project site at all times.
PERMIT NO: 28 N 2332-CP
REVIEWED BY: LEO CATAYLO, OSFM
DATE: 4/1/2021

GENERAL SERVICES
Department of General Services
State of California
Real Estate Services Division
Project Management & Development Branch
707 Third Street, Suite 4-105
West Sacramento, California 95605

NICHOLS MELBURG & ROSSETTO
ARCHITECTS + ENGINEERS
300 Knollcrest Drive
Redding, CA. 96002
(530) 222-3300 (530) 222-3538 FAX
http://www.nmrdesign.com

Copyright © 2019
All ideas, designs, arrangements and plans indicated or represented by this drawing are owned by, and the property of, NICHOLS, MELBURG and ROSSETTO and were created, evolved and developed for use on, and in connection with, the specified project. None of such ideas, designs, arrangements or plans shall be used by, or disclosed to, any person, firm or corporation for any purpose whatsoever without the written permission of NICHOLS, MELBURG and ROSSETTO.

LICENSE STAMPS

REGISTERED PROFESSIONAL ENGINEER RAYMOND W. SWEET
No. E15610
12/31/2021
ELECTRICAL
STATE OF CALIFORNIA
Date Signed 3/25/2021

CONSULTANT
tklsc COLLABORATIVE
11870 Pierce Street, Suite 160
Riverside, California 92505
951.299.4160 www.tk1sc.com
Project Leader - Jerry Leonhardt
Electrical Lead - Reid Cordry
tk1sc Job #:2019-0228A

DRAWING STATUS
CONSTRUCTION DOCUMENTS

ISSUE

No.	Date	Description
1	10/20/2020	INITIAL PLAN REVIEW
2	01/22/2021	AGENCY RESUBMITTAL
3	03/22/2021	AGENCY RESUBMITTAL

If drawing is not 30" x 42" it is a reduced print

PROJECT
RESIDENTIAL CENTER, UKIAH: REPLACEMENT OF EXISTING RESIDENTIAL CENTER
440 EAST HILL ROAD
WILLITS, CALIFORNIA 95490
MENDOCINO COUNTY
CALIFORNIA CONSERVATION CORPS

Supervisor	Designed	Drawn
		Author

DSA Application No.
XX-XXXXXX

SHEET TITLE
WOMEN'S HOUSING FIRE ALARM PLAN

DGS Project Number	NMR Project Number
0000000000001826	18-6456

Reference North
Sheet Scale: As indicated
Sheet Number: FA201HW

ISSUE DATE
July 9, 2021

Plot Date: 3/22/2021 9:12:26 AM
File Name: BIM 360:/CCC Willits Residential Center/E_CCC Willits_DORM-WOMEN_2019-0228A.rvt

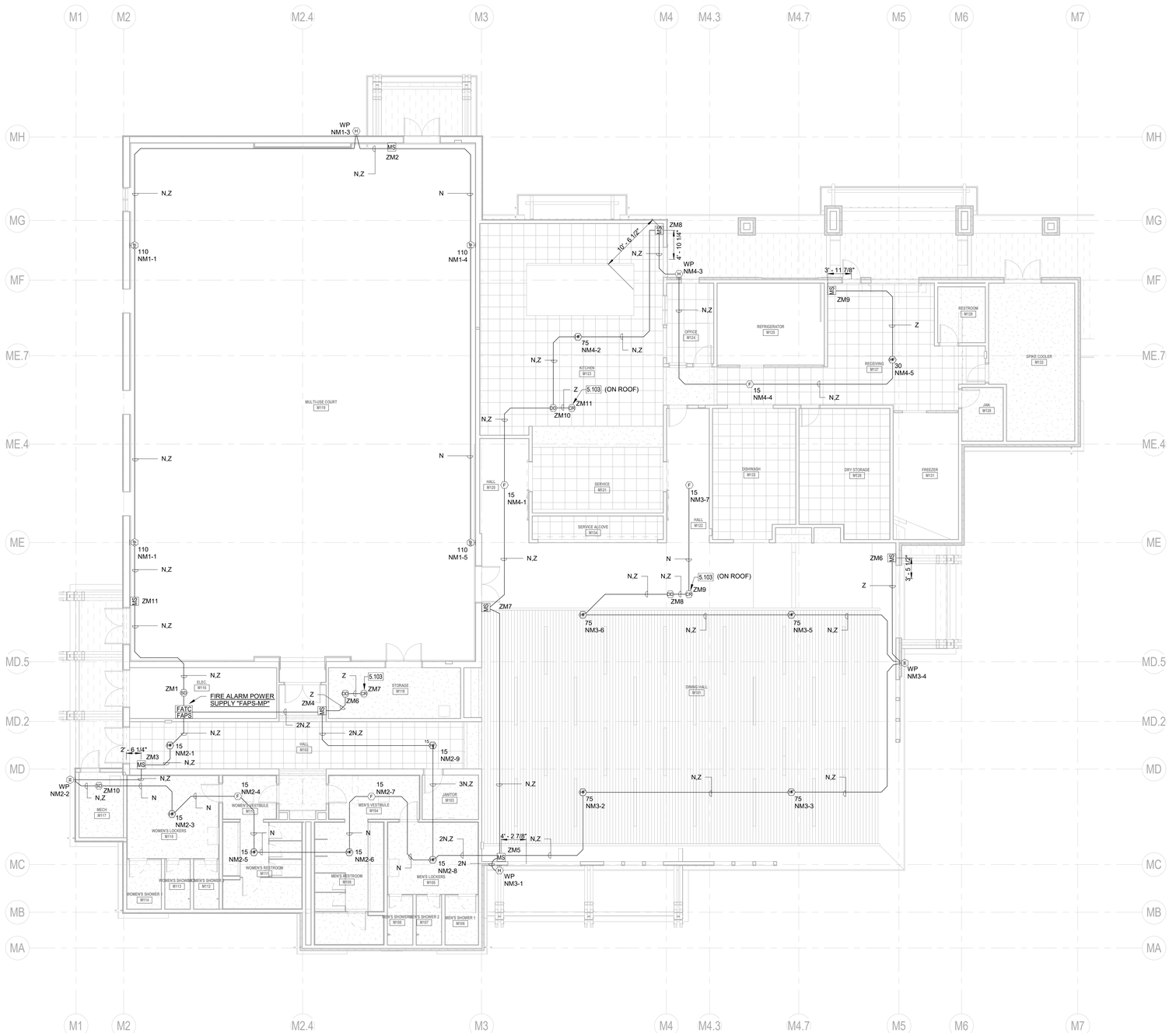

MULTI-PURPOSE BUIDLING FIRE ALARM PLAN

SCALE: 1/8" = 1'-0"

KEYNOTES

5.103 CONNECT AS REQUIRED TO HVAC UNIT FOR UNIT SHUT-DOWN. REFER TO DETAIL 3, SHEET FA002 FOR ADDITIONAL REQUIREMENTS.

WALL TYPES LEGEND

SEE SHEET G121 FOR ASSEMBLY TYPES

EXTERIOR

2 x 6 WOOD STUD WALL - NON RATED	0-W1-6 * ● #
2 x 12 WOOD STUD WALL - NON RATED	0-W1-12 * ● #

INTERIOR

2 x 4 WOOD STUD WALL - NON RATED	0-W2-4 * ● #
2 x 6 WOOD STUD WALL - NON RATED	0-W2-6 * ● #
2 x 8 WOOD STUD WALL - NON RATED	0-W2-8 * ● #
2 x 12 WOOD STUD WALL - NON RATED	0-W2-12 * ● #
2 x 4 WOOD STUD WALL - ACOUSTIC	0-W5-4 * ● #
2 x 6 WOOD STUD WALL - ACOUSTIC	0-W5-6 * ● #
2 X 4 WOOD STUD WALL - 1-HR FIRE PARTITION W/ PROTECTED OPENINGS	1-W3-4 * ● #
2 X 6 WOOD STUD WALL - 1-HR FIRE PARTITION W/ PROTECTED OPENINGS	1-W3-6 * ● #

WALL TYPE NOTES

PARTITION SYMBOL

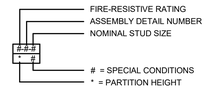

FIRE ALARM PLAN GENERAL NOTES:

1. NOTIFICATION DEVICES IN ROOMS CONTAINING (2) OR MORE AUDIBLE AND/OR (2) OR MORE VISUAL DEVICES SHALL BE SYNCHRONIZED PER N.F.P.A. 72, 2016 EDITION (WITH CALIFORNIA AMENDMENTS) THIS SHALL INCLUDE AUDIBLE AND VISUAL DEVICES LOCATED IN ADJACENT/ADJOINING SPACES.
2. DO NOT DEVIATE FROM CONDUIT RUNS AS SHOWN ON FLOOR PLANS WITHOUT PRIOR APPROVAL FROM SYSTEM SUPPLIER / ENGINEER. FACTORS SUCH AS EXCESSIVE VOLTAGE DROP, ADDITIONAL PARTS, ENGINEERING, ETC. THAT ARE A RESULT OF CONDUIT RUN DEVIATIONS SHALL BE THE SOLE RESPONSIBILITY OF THE CONTRACTOR.
3. DETECTORS SHALL NOT BE LOCATED IN A DIRECT AIR-FLOW, NOR CLOSER THAN 3 FEET (915 mm) FROM ANY AIR SUPPLY DIFFUSER.
4. THE AUDIBLE ALARM NOTIFICATION APPLIANCES SHALL PROVIDE A SOUND PRESSURE LEVEL OF 15 dBA ABOVE THE AVERAGE AMBIENT SOUND LEVEL OR 5 dBA ABOVE THE MAXIMUM SOUND LEVEL HAVING DURATION OF AT LEAST 60 SECONDS, WHICHEVER IS GREATER, IN EVERY OCCUPIABLE SPACE WITHIN THE BUILDING. (2016 CFC 907.5.2.1.1)
5. THE VOICE/ALARM COMMUNICATION SYSTEM VOICE MESSAGE SHALL COMPLY WITH NFPA 72 SECTIONS 18.4 AND 24.4 FOR GENERAL REQUIREMENTS, INTELLIGIBILITY, AUDIBILITY, MESSAGE PRIORTY, TONES, ETC.
6. REFER TO ARCHITECTURAL EXTERIOR ELEVATIONS FOR PRECISE OUTLET LOCATIONS.
7. REFER TO ARCHITECTURAL REFLECTED CEILING PLAN FOR EXACT LOCATION OF ALL CEILING MOUNTED DEVICES.
8. IF SHIELDED WIRE IS USED, THE FOLLOWING MUST BE OBSERVED.
   A. METALLIC CONTINUITY OF THE SHIELD MUST BE MAINTAINED AND INSULATED THROUGHOUT THE ENTIRE LENGTH OF THE CABLE.
   B. THE ENTIRE LENGTH OF THE CABLE MUST HAVE A RESISTANCE GREATER THAN 1 MEGOHM TO EARTH.
9. ALL PENETRATIONS THROUGH FIRE RATED WALLS SHALL BE PROTECTED FROM THE SPREAD OF FIRE WITH AN APPROVED FIRE STOP SYSTEM EQUAL TO OR GREATER THAN THE FIRE RATING OF THE STRUCTURE / SURFACE BEING PENETRATED AS I DENTIFIED IN CBC CHAPTER 7. UL OR OTHER LAB TESTING CRITERIA. APPROVED TYPES OF MATERIALS SHALL BE IDENTIFIED WITHIN THE FIRE ALARM SECTION OF THE PROJECT SPECIFICATIONS.
10. A SYSTEM GROUND MUST BE PROVIDED FOR EARTH DETECTION AND LIGHTNING PROTECTOR DEVICES. THIS CONNECTION SHALL BE MADE TO AN APPROVED DEDICATED EARTH CONNECTION PER CEC, ARTICLE 250.
11. WIRING IN DUCTS, PLENUMS AND OTHER AIR HANDLING SPACES MUST BE INSTALLED IN ACCORDANCE WITH CEC 2019.
12. UNDERGROUND WIRING MUST BE FREE OF ALL WATER.
13. ALL FIRE ALARM SYSTEM CONDUCTORS SHALL BE RUN IN A DEDICATED FIRE ALARM CONDUIT SYSTEM.
14. WHERE A DETECTOR IS INDICATED TO BE INSTALLED ABOVE THE CEILING AND NO ACCESS TO THE CEILING SPACE EXISTS, THE ELECTRICAL CONTRACTOR SHALL FURNISH ACCESS PANELS. THE DETECTOR SHALL BE EASILY ACCESSIBLE AND THE LOCATION OF THE DETECTOR SHALL BE CLEARLY MARKED.
15. WIRING OTHER THAN THAT CONNECTED TO ELEVATOR CABS MUST NOT BE RUN IN ELEVATOR SHAFTS (REF. CEC, ARTICLE 620).
16. FIRE ALARM SYSTEM UTILIZES A COMPLETE COVERAGE, FULLY AUTOMATIC SYSTEM. PROVIDE RELAY MODULE(S) AT FATC/FACP LOCATIONS FOR CONTROL OF HVAC SHUT DOWN, SMOKE/FIRE DAMPER CLOSURE AND DOOR HOLD RELEASES.
17. WHERE NEW DEVICES (AND ASSOCIATED CONDUIT) CANNOT PHYSICALLY BE MOUNTED CONCEALED IN WALLS, RUN IN PANDUIT SURFACE RACEWAY/WIREWAY (AND DEVICES SHALL BE MOUNTED ON SURFACE OUTLET BOXES). REFER TO SPECIFICATIONS. PROVIDE SIZE OF RACEWAY TO ACCOMMODATE THE REQUIRED CONDUCTORS. WHERE CONDUIT IS INDICATED, PROVIDE SURFACE RACEWAY WITH AN EQUAL CROSS SECTION TO THE DIAMETER OF THE CONDUIT INDICATED.
18. DETECTOR SENSITIVITY SHALL BE TESTED USING MANUFACTURER'S CALIBRATED SENSITIVITY INSTRUMENT OR OTHER CALIBRATED TESTING METHOD. (CFC 907.8.3)
19. STORAGE BATTERIES SHALL BE PERMANENTLY MARKED WITH THE MONTH AND YEAR OF MAUFACTURE, USING THE MONTH/YEAR FORMAT. THE MARKING SHALL BE PERMITTED TO BE APPLIED BY EITHER THE MANUFACTURER OR THE INSTALLER. WHERE THE BATTERY IS NOT MARKED WITH THE MONTH/YEAR BY THE MANUFACTURER, THE INSTALLER SHALL OBTAIN THE DATE-CODE AND MARK THE BATTERY WITH THE MONTH/YEAR OF BATTERY MANUFACTURE.

COMPLETE FIRE ALARM SUBMITTAL

MANUAL ADDRESSABLE FIRE ALARM SYSTEM

IDENTIFICATION STAMP
DIV. OF THE STATE ARCHITECT
APP: 02-118630 INC:
REVIEWED FOR
SS ☐ FLS ☐ ACS ☑
DATE: 04/13/2021

OFFICE OF THE STATE FIRE MARSHAL
APPROVED FIRE AND PANIC ONLY
Approval of this plan does not authorize or approve any omission or deviation from applicable regulations. Final approval is subject to field inspection. One set of approved plans shall be available on the project site at all times.
PERMIT NO.: 28 N 2332-CP
REVIEWED BY: LEO CATAYLO, OSFM
DATE: 4/ /2021

DGS GENERAL SERVICES
Department of General Services
State of California
Real Estate Services Division
Project Management & Development Branch
707 Third Street, Suite 4-105
West Sacramento, California 95605

NICHOLS MELBURG & ROSSETTO ARCHITECTS + ENGINEERS
300 Knollcrest Drive
Redding, CA. 96002
(530) 222-3300 (530) 222-3538 FAX
http://www.nmrdesign.com

Copyright © 2019
All ideas, designs, arrangements and plans indicated or represented by this drawing are owned by, and the property of, NICHOLS, MELBURG and ROSSETTO and were created, evolved and developed for use on, and in connection with, the specified project. None of such ideas, designs, arrangements or plans shall be used by, or disclosed to any person, firm or corporation for any purpose whatsoever without the written permission of NICHOLS, MELBURG and ROSSETTO.

LICENSE STAMPS

REGISTERED PROFESSIONAL ENGINEER RAYMOND W. SWIFT No. E15610 12/31/2021 ELECTRICAL CALIFORNIA
Date Signed: 3/25/2021

CONSULTANT
tk1sc COLLABORATIVE
11870 Pierce Street, Suite 160
Riverside, California 92505
951.299.4160 www.tk1sc.com
Project Leader - Jerry Leonhardt
Electrical Lead - Reid Cordry
tk1sc Job #:2019-0228A

DRAWING STATUS
CONSTRUCTION DOCUMENTS

ISSUE

No.	Date	Description
1	10/20/2020	INITIAL PLAN REVIEW
2	01/22/2021	AGENCY RESUBMITTAL
3	03/22/2021	AGENCY RESUBMITTAL

If drawing is not 30" x 42" it is a reduced print

PROJECT
RESIDENTIAL CENTER, UKIAH: REPLACEMENT OF EXISTING RESIDENTIAL CENTER
440 EAST HILL ROAD
WILLITS, CALIFORNIA 95490
MENDOCINO COUNTY
CALIFORNIA CONSERVATION CORP

Supervisor	Designed	Drawn
		Author

DSA Application No.
XX-XXXXXX

SHEET TITLE
MULTI-PURPOSE BUIDLING FIRE ALARM PLAN

DGS Project Number	NMR Project Number
XXXXX	18-6456

Reference North

Sheet Scale: As indicated

Sheet Number: FA201M

ISSUE DATE
July 9, 2021

Plot Date: 3/22/2021 9:23:38 AM
File Name: BIM 360://CCC Willits Residential Center/E_CCC Willits_MP_2019-0228A.rvt

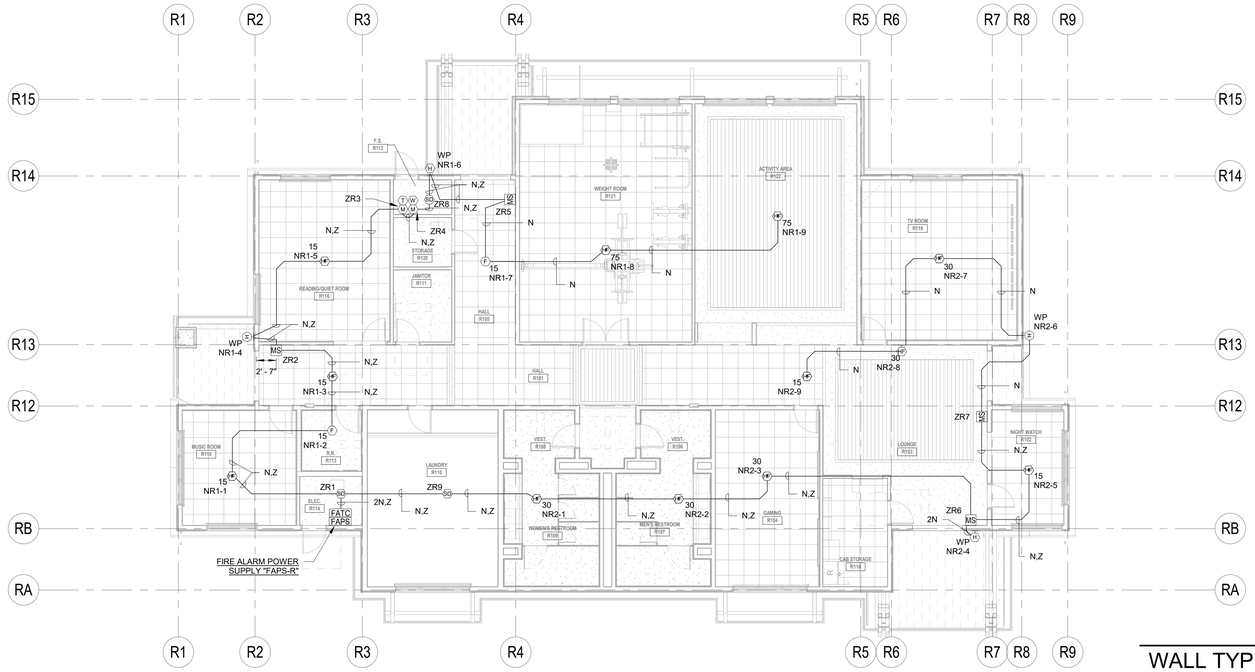

RECREATION BUILDING FIRE ALARM PLAN

NORTH

SCALE: 1/8" = 1'-0"

WALL TYPES LEGEND

SEE SHEET G121 FOR ASSEMBLY TYPES

EXTERIOR

2 x 6 WOOD STUD WALL - NON RATED	0-W1-6 * ● #
2 x 12 WOOD STUD WALL - NON RATED	0-W1-12 * ● #

INTERIOR

2 x 4 WOOD STUD WALL - NON RATED	0-W2-4 * ● #
2 x 6 WOOD STUD WALL - NON RATED	0-W2-6 * ● #
2 x 8 WOOD STUD WALL - NON RATED	0-W2-8 * ● #
2 x 12 WOOD STUD WALL - NON RATED	0-W2-12 * ● #
2 x 4 WOOD STUD WALL - ACOUSTIC	0-W5-4 * ● #
2 x 6 WOOD STUD WALL - ACOUSTIC	0-W5-6 * ● #
2 X 4 WOOD STUD WALL - 1-HR FIRE PARTITION W/ PROTECTED OPENINGS	1-W3-4 * ● #
2 X 6 WOOD STUD WALL - 1-HR FIRE PARTITION W/ PROTECTED OPENINGS	1-W3-6 * ● #

WALL TYPE NOTES

PARTITION SYMBOL

- FIRE-RESISTIVE RATING
- ASSEMBLY DETAIL NUMBER
- NOMINAL STUD SIZE

#-#-#
* - #

- # = SPECIAL CONDITIONS
- * = PARTITION HEIGHT

FIRE ALARM PLAN GENERAL NOTES:

1. NOTIFICATION DEVICES IN ROOMS CONTAINING (2) OR MORE AUDIBLE AND/OR (2) OR MORE VISUAL DEVICES SHALL BE SYNCHRONIZED PER N.F.P.A. 72, 2016 EDITION (WITH CALIFORNIA AMENDMENTS) THIS SHALL INCLUDE AUDIBLE AND VISUAL DEVICES LOCATED IN ADJACENT/ADJOINING SPACES.
2. DO NOT DEVIATE FROM CONDUIT RUNS AS SHOWN ON FLOOR PLANS WITHOUT PRIOR APPROVAL FROM SYSTEM SUPPLIER / ENGINEER. FACTORS SUCH AS EXCESSIVE VOLTAGE DROP, ADDITIONAL PARTS, ENGINEERING, ETC. THAT ARE A RESULT OF CONDUIT RUN DEVIATIONS SHALL BE THE SOLE RESPONSIBILITY OF THE CONTRACTOR.
3. DETECTORS SHALL NOT BE LOCATED IN A DIRECT AIR-FLOW, NOR CLOSER THAN 3 FEET (915 mm) FROM ANY AIR SUPPLY DIFFUSER.
4. THE AUDIBLE ALARM NOTIFICATION APPLIANCES SHALL PROVIDE A SOUND PRESSURE LEVEL OF 15 dBA ABOVE THE AVERAGE AMBIENT SOUND LEVEL OR 5 dBA ABOVE THE MAXIMUM SOUND LEVEL HAVING DURATION OF AT LEAST 60 SECONDS, WHICHEVER IS GREATER, IN EVERY OCCUPIABLE SPACE WITHIN THE BUILDING. (2016 CFC 907.5.2.1.1)
5. THE VOICE/ALARM COMMUNICATION SYSTEM VOICE MESSAGE SHALL COMPLY WITH NFPA 72 SECTIONS 18.4 AND 24.4 FOR GENERAL REQUIREMENTS, INTELLIGIBILITY, AUDIBILITY, MESSAGE PRIORITY, TONES, ETC.
6. REFER TO ARCHITECTURAL EXTERIOR ELEVATIONS FOR PRECISE OUTLET LOCATIONS.
7. REFER TO ARCHITECTURAL REFLECTED CEILING PLAN FOR EXACT LOCATION OF ALL CEILING MOUNTED DEVICES.
8. IF SHIELDED WIRE IS USED, THE FOLLOWING MUST BE OBSERVED.
   A. METALLIC CONTINUITY OF THE SHIELD MUST BE MAINTAINED AND INSULATED THROUGHOUT THE ENTIRE LENGTH OF THE CABLE.
   B. THE ENTIRE LENGTH OF THE CABLE MUST HAVE A RESISTANCE GREATER THAN 1 MEGOHM TO EARTH.
9. ALL PENETRATIONS THROUGH FIRE RATED WALLS SHALL BE PROTECTED FROM THE SPREAD OF FIRE WITH AN APPROVED FIRE STOP SYSTEM EQUAL TO OR GREATER THAN THE FIRE RATING OF THE STRUCTURE / SURFACE BEING PENETRATED AS I DENTIFIED IN CBC CHAPTER 7, UL OR OTHER LAB TESTING CRITERIA. APPROVED TYPES OF MATERIALS SHALL BE IDENTIFIED WITHIN THE FIRE ALARM SECTION OF THE PROJECT SPECIFICATIONS.
10. A SYSTEM GROUND MUST BE PROVIDED FOR EARTH DETECTION AND LIGHTNING PROTECTION DEVICES. THIS CONNECTION SHALL BE MADE TO AN APPROVED DEDICATED EARTH CONNECTION PER CEC, ARTICLE 250.
11. WIRING IN DUCTS, PLENUMS AND OTHER AIR HANDLING SPACES MUST BE INSTALLED IN ACCORDANCE WITH CEC 2019.
12. UNDERGROUND WIRING MUST BE FREE OF ALL WATER.
13. ALL FIRE ALARM SYSTEM CONDUCTORS SHALL BE RUN IN A DEDICATED FIRE ALARM CONDUIT SYSTEM.
14. WHERE A DETECTOR IS INDICATED TO BE INSTALLED ABOVE THE CEILING AND NO ACCESS TO THE CEILING SPACE EXISTS, THE ELECTRICAL CONTRACTOR SHALL FURNISH ACCESS PANELS. THE DETECTOR SHALL BE EASILY ACCESSIBLE AND THE LOCATION OF THE DETECTOR SHALL BE CLEARLY MARKED.
15. WIRING OTHER THAN THAT CONNECTED TO ELEVATOR CABS MUST NOT BE RUN IN ELEVATOR SHAFTS (REF. CEC, ARTICLE 620).
16. FIRE ALARM SYSTEM UTILIZES A COMPLETE COVERAGE, FULLY AUTOMATIC SYSTEM. PROVIDE RELAY MODULE(S) AT FATC/FACP LOCATIONS FOR CONTROL OF HVAC SHUT DOWN, SMOKE/FIRE DAMPER CLOSURE AND DOOR HOLD RELEASES.
17. WHERE NEW DEVICES (AND ASSOCIATED CONDUIT) CANNOT PHYSICALLY BE MOUNTED CONCEALED IN WALLS, RUN IN PANDUIT SURFACE RACEWAY/WIREWAY (AND DEVICES SHALL BE MOUNTED ON SURFACE OUTLET BOXES). REFER TO SPECIFICATIONS. PROVIDE SIZE OF RACEWAY TO ACCOMMODATE THE REQUIRED CONDUCTORS. WHERE CONDUIT IS INDICATED, PROVIDE SURFACE RACEWAY WITH AN EQUAL CROSS SECTION TO THE DIAMETER OF THE CONDUIT INDICATED.
18. DETECTOR SENSITIVITY SHALL BE TESTED USING MANUFACTURER'S CALIBRATED SENSITIVITY INSTRUMENT OR OTHER CALIBRATED TESTING METHOD. (CFC 907.8.3)
19. STORAGE BATTERIES SHALL BE PERMANENTLY MARKED WITH THE MONTH AND YEAR OF MAUFACTURE, USING THE MONTH/YEAR FORMAT. THE MARKING SHALL BE PERMITTED TO BE APPLIED BY EITHER THE MANUFACTURER OR THE INSTALLER. WHERE THE BATTERY IS NOT MARKED WITH THE MONTH/YEAR BY THE MANUFACTURER, THE INSTALLER SHALL OBTAIN THE DATE-CODE AND MARK THE BATTERY WITH THE MONTH/YEAR OF BATTERY MANUFACTURE.

COMPLETE FIRE ALARM SUBMITTAL

MANUAL ADDRESSABLE FIRE ALARM SYSTEM

IDENTIFICATION STAMP
DIV. OF THE STATE ARCHITECT
APP: 02-118630 INC:
REVIEWED FOR
SS ☐ FLS ☐ ACS ☑
DATE: 04/13/2021

OFFICE OF THE STATE FIRE MARSHAL
APPROVED FIRE AND PANIC ONLY
Approval of this plan does not authorize or approve any omission or deviation from applicable regulations. Final approval is subject to field inspection. One set of approved plans shall be available on the project site at all times.
PERMIT NO.: 20-N-2332-CP
REVIEWED BY: LEO CATAYLO, OSFM
DATE: 4/1/2021

GENERAL SERVICES
Department of General Services
State of California
Real Estate Services Division
Project Management & Development Branch
707 Third Street, Suite 4-105
West Sacramento, California 95605

NICHOLS MELBURG & ROSSETTO
ARCHITECTS + ENGINEERS
300 Knollcrest Drive
Redding, CA. 96002
(530) 222-3300 (530) 222-3538 FAX
http://www.nmrdesign.com

Copyright © 2019
All ideas, designs, arrangements and plans indicated or represented by this drawing are owned by, and the property of, NICHOLS, MELBURG and ROSSETTO and were created, evolved and developed for use on, and in connection with, the specified project. None of such ideas, designs, arrangements or plans shall be used by, or disclosed to any person, firm or corporation for any purpose whatsoever without the written permission of NICHOLS, MELBURG and ROSSETTO.

LICENSE STAMPS

REGISTERED PROFESSIONAL ENGINEER
RAYMOND W. SINNETT
No. E15610
12/31/2021
ELECTRICAL
STATE OF CALIFORNIA
Date Signed: 3/25/2021

CONSULTANT
tklsc COLLABORATIVE
11870 Pierce Street, Suite 160
Riverside, California 92505
951.299.4160 www.tk1sc.com
Project Leader - Jerry Leonhardt
Electrical Lead - Reid Cordry
tk1sc Job #:2019-0228A

DRAWING STATUS
CONSTRUCTION DOCUMENTS

ISSUE

No.	Date	Description
1	10/20/2020	INITIAL PLAN REVIEW
2	01/22/2021	AGENCY RESUBMITTAL
3	03/22/2021	AGENCY RESUBMITTAL

If drawing is not 30" x 42" it is a reduced print

PROJECT
RESIDENTIAL CENTER, UKIAH: REPLACEMENT OF EXISTING RESIDENTIAL CENTER
440 EAST HILL ROAD
WILLITS, CALIFORNIA 95490
MENDOCINO COUNTY
CALIFORNIA CONSERVATION CORP

Supervisor	Designed	Drawn
		Author

DSA Application No.
XX-XXXXXX

SHEET TITLE
RECREATION BUILDING FIRE ALARM PLAN

DGS Project Number	NMR Project Number
XXXXX	18-6456

Reference North: NORTH
Sheet Scale: As indicated
Sheet Number: FA201R

ISSUE DATE
July 9, 2021

Plot Date: 3/22/2021 9:26:11 AM
File Name: BIM 360:/CCC Willits Residential Center/E_CCC Willits_REC_2019-0228A.rvt

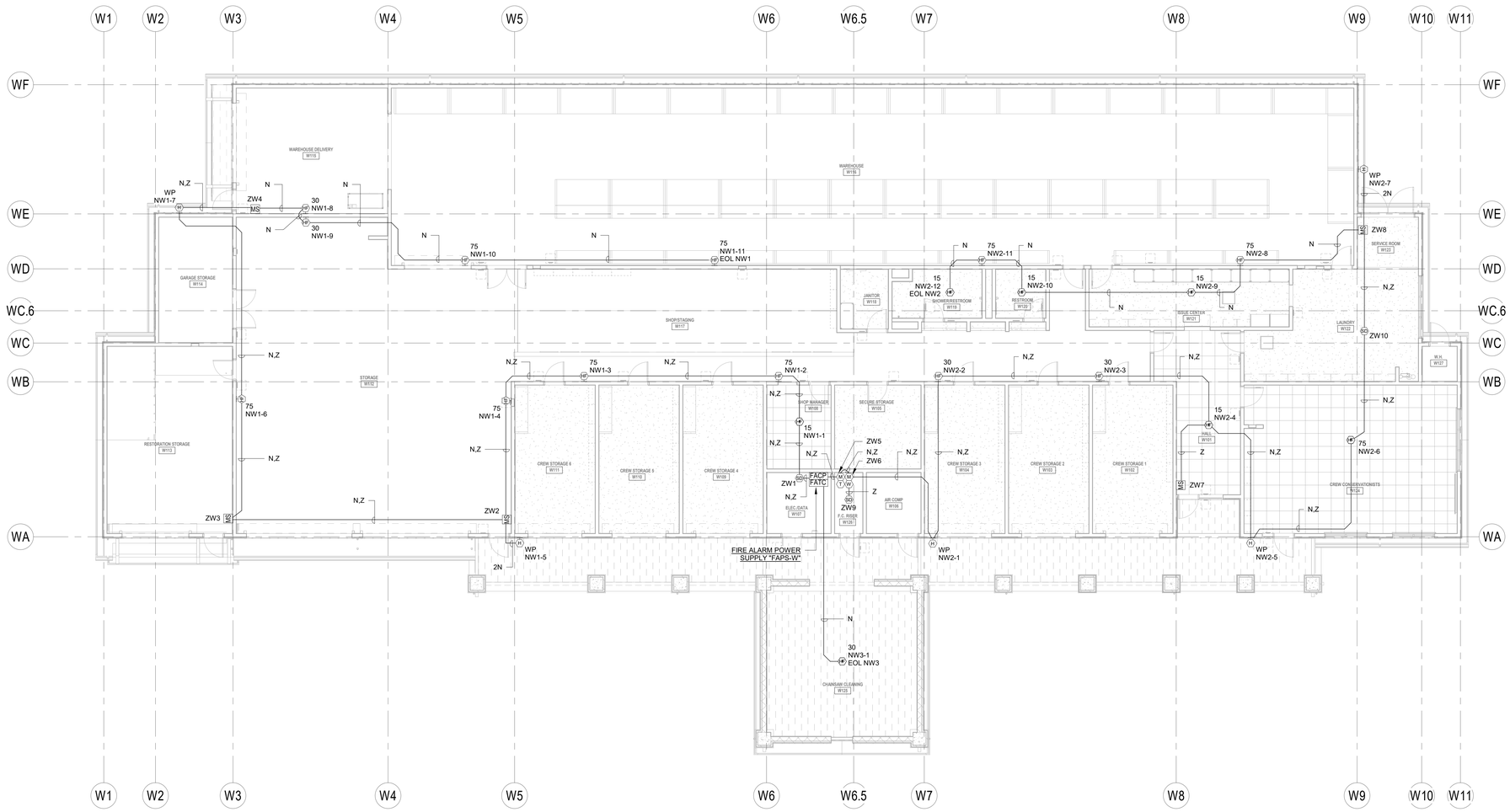

WAREHOUSE BUILDING FIRE ALARM PLAN

SCALE: 1/8" = 1'-0"

WALL TYPES LEGEND

SEE SHEET G121 FOR ASSEMBLY TYPES

EXTERIOR

2 x 6 WOOD STUD WALL - NON RATED	0-W1-6 * ● #
2 x 12 WOOD STUD WALL - NON RATED	0-W1-12 * ● #

INTERIOR

2 x 4 WOOD STUD WALL - NON RATED	0-W2-4 * ● #
2 x 6 WOOD STUD WALL - NON RATED	0-W2-6 * ● #
2 x 8 WOOD STUD WALL - NON RATED	0-W2-8 * ● #
2 x 12 WOOD STUD WALL - NON RATED	0-W2-12 * ● #
2 x 4 WOOD STUD WALL - ACOUSTIC	0-W5-4 * ● #
2 x 6 WOOD STUD WALL - ACOUSTIC	0-W5-6 * ● #
2 X 4 WOOD STUD WALL - 1-HR FIRE PARTITION W/ PROTECTED OPENINGS	1-W3-4 * ● #
2 X 6 WOOD STUD WALL - 1-HR FIRE PARTITION W/ PROTECTED OPENINGS	1-W3-6 * ● #

WALL TYPE NOTES

PARTITION SYMBOL

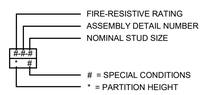

FIRE ALARM PLAN GENERAL NOTES:

1. NOTIFICATION DEVICES IN ROOMS CONTAINING (2) OR MORE AUDIBLE AND/OR (2) OR MORE VISUAL DEVICES SHALL BE SYNCHRONIZED PER N.F.P.A. 72, 2016 EDITION (WITH CALIFORNIA AMENDMENTS) THIS SHALL INCLUDE AUDIBLE AND VISUAL DEVICES LOCATED IN ADJACENT/ADJOINING SPACES.
2. DO NOT DEVIATE FROM CONDUIT RUNS AS SHOWN ON FLOOR PLANS WITHOUT PRIOR APPROVAL FROM SYSTEM SUPPLIER / ENGINEER. FACTORS SUCH AS EXCESSIVE VOLTAGE DROP, ADDITIONAL PARTS, ENGINEERING, ETC. THAT ARE A RESULT OF CONDUIT RUN DEVIATIONS SHALL BE THE SOLE RESPONSIBILITY OF THE CONTRACTOR.
3. DETECTORS SHALL NOT BE LOCATED IN A DIRECT AIR-FLOW, NOR CLOSER THAN 3 FEET (915 mm) FROM ANY AIR SUPPLY DIFFUSER.
4. THE AUDIBLE ALARM NOTIFICATION APPLIANCES SHALL PROVIDE A SOUND PRESSURE LEVEL OF 15 dBA ABOVE THE AVERAGE AMBIENT SOUND LEVEL OR 5 dBA ABOVE THE MAXIMUM SOUND LEVEL HAVING DURATION OF AT LEAST 60 SECONDS, WHICHEVER IS GREATER, IN EVERY OCCUPIABLE SPACE WITHIN THE BUILDING. (2016 CFC 907.5.2.1.1)
5. THE VOICE/ALARM COMMUNICATION SYSTEM VOICE MESSAGE SHALL COMPLY WITH NFPA 72 SECTIONS 18.4 AND 24.4 FOR GENERAL REQUIREMENTS, INTELLIGIBILITY, AUDIBILITY, MESSAGE PRIORITY, TONES, ETC.
6. REFER TO ARCHITECTURAL EXTERIOR ELEVATIONS FOR PRECISE OUTLET LOCATIONS.
7. REFER TO ARCHITECTURAL REFLECTED CEILING PLAN FOR EXACT LOCATION OF ALL CEILING MOUNTED DEVICES.
8. IF SHIELDED WIRE IS USED, THE FOLLOWING MUST BE OBSERVED.
   A. METALLIC CONTINUITY OF THE SHIELD MUST BE MAINTAINED AND INSULATED THROUGHOUT THE ENTIRE LENGTH OF THE CABLE.
   B. THE ENTIRE LENGTH OF THE CABLE MUST HAVE A RESISTANCE GREATER THAN 1 MEGOHM TO EARTH.
9. ALL PENETRATIONS THROUGH FIRE RATED WALLS SHALL BE PROTECTED FROM THE SPREAD OF FIRE WITH AN APPROVED FIRE STOP SYSTEM EQUAL TO OR GREATER THAN THE FIRE RATING OF THE STRUCTURE / SURFACE BEING PENETRATED AS I DENTIFIED IN CBC CHAPTER 7. UL OR OTHER LAB TESTING CRITERIA. APPROVED TYPES OF MATERIALS SHALL BE IDENTIFIED WITHIN THE FIRE ALARM SECTION OF THE PROJECT SPECIFICATIONS.
10. A SYSTEM GROUND MUST BE PROVIDED FOR EARTH DETECTION AND LIGHTNING PROTECTION DEVICES. THIS CONNECTION SHALL BE MADE TO AN APPROVED DEDICATED EARTH CONNECTION PER CEC, ARTICLE 250.
11. WIRING IN DUCTS, PLENUMS AND OTHER AIR HANDLING SPACES MUST BE INSTALLED IN ACCORDANCE WITH CEC 2019.
12. UNDERGROUND WIRING MUST BE FREE OF ALL WATER.
13. ALL FIRE ALARM SYSTEM CONDUCTORS SHALL BE RUN IN A DEDICATED FIRE ALARM CONDUIT SYSTEM.
14. WHERE A DETECTOR IS INDICATED TO BE INSTALLED ABOVE THE CEILING AND NO ACCESS TO THE CEILING SPACE EXISTS, THE ELECTRICAL CONTRACTOR SHALL FURNISH ACCESS PANELS. THE DETECTOR SHALL BE EASILY ACCESSIBLE AND THE LOCATION OF THE DETECTOR SHALL BE CLEARLY MARKED.
15. WIRING OTHER THAN THAT CONNECTED TO ELEVATOR CABS MUST NOT BE RUN IN ELEVATOR SHAFTS (REF. CEC, ARTICLE 620).
16. FIRE ALARM SYSTEM UTILIZES A COMPLETE COVERAGE, FULLY AUTOMATIC SYSTEM. PROVIDE RELAY MODULE(S) AT FATC/FACP LOCATIONS FOR CONTROL OF HVAC SHUT DOWN, SMOKE/FIRE DAMPER CLOSURE AND DOOR HOLD RELEASES.
17. WHERE NEW DEVICES (AND ASSOCIATED CONDUIT) CANNOT PHYSICALLY BE MOUNTED CONCEALED IN WALLS, RUN IN PANDUIT SURFACE RACEWAY/WIREWAY (AND DEVICES SHALL BE MOUNTED ON SURFACE OUTLET BOXES). REFER TO SPECIFICATIONS. PROVIDE SIZE OF RACEWAY TO ACCOMMODATE THE REQUIRED CONDUCTORS. WHERE CONDUIT IS INDICATED, PROVIDE SURFACE RACEWAY WITH AN EQUAL CROSS SECTION TO THE DIAMETER OF THE CONDUIT INDICATED.
18. DETECTOR SENSITIVITY SHALL BE TESTED USING MANUFACTURER'S CALIBRATED SENSITIVITY INSTRUMENT OR OTHER CALIBRATED TESTING METHOD. (CFC 907.8.3)
19. STORAGE BATTERIES SHALL BE PERMANENTLY MARKED WITH THE MONTH AND YEAR OF MAUFACTURE. USING THE MONTH/YEAR FORMAT. THE MARKING SHALL BE PERMITTED TO BE APPLIED BY EITHER THE MANUFACTURER OR THE INSTALLER. WHERE THE BATTERY IS NOT MARKED WITH THE MONTH/YEAR BY THE MANUFACTURER, THE INSTALLER SHALL OBTAIN THE DATE-CODE AND MARK THE BATTERY WITH THE MONTH/YEAR OF BATTERY MANUFACTURE.

COMPLETE FIRE ALARM SUBMITTAL

MANUAL ADDRESSABLE FIRE ALARM SYSTEM

IDENTIFICATION STAMP
DIV. OF THE STATE ARCHITECT
APP: 02-118630 INC:
REVIEWED FOR
SS ☐ FLS ☐ ACS ☑
DATE: 04/13/2021

OFFICE OF THE STATE FIRE MARSHAL
APPROVED FIRE AND PANIC ONLY
Approval of this plan does not authorize or approve any omission or deviation from applicable regulations. Final approval is subject to field inspection. One set of approved plans shall be available on the project site at all times.
PERMIT NO: 28-N-2332-CP
REVIEWED BY: LEO CATAYLO, OSFM
DATE: 4/1/2021

DGS GENERAL SERVICES
Department of General Services
State of California
Real Estate Services Division
Project Management & Development Branch
707 Third Street, Suite 4-105
West Sacramento, California 95605

NICHOLS MELBURG & ROSSETTO ARCHITECTS + ENGINEERS
300 Knollcrest Drive
Redding, CA. 96002
(530) 222-3300 (530) 222-3538 FAX
http://www.nmrdesign.com

Copyright © 2019
All ideas, designs, arrangements and plans indicated or represented by this drawing are owned by, and the property of, NICHOLS, MELBURG and ROSSETTO and were created, evolved and developed for use on, and in connection with, the specified project. None of the ideas, designs, arrangements or plans shall be used by, or disclosed to any person, firm or corporation for any purpose whatsoever without the written permission of NICHOLS, MELBURG and ROSSETTO.

LICENSE STAMPS

REGISTERED PROFESSIONAL ENGINEER RAYMOND W. SWOPE No. E15610 12/31/2021 ELECTRICAL STATE OF CALIFORNIA
Date Signed: 3/25/2021

CONSULTANT
tk1sc COLLABORATIVE
11870 Pierce Street, Suite 160
Riverside, California 92505
951.299.4160 www.tk1sc.com
Project Leader - Jerry Leonhardt
Electrical Lead - Reid Cordry
tk1sc Job #:2019-0228A

DRAWING STATUS
CONSTRUCTION DOCUMENTS

ISSUE

No.	Date	Description
1	10/20/2020	INITIAL PLAN REVIEW
2	01/22/2021	AGENCY RESUBMITTAL
3	03/22/2021	AGENCY RESUBMITTAL

If drawing is not 30" x 42" it is a reduced print

PROJECT
RESIDENTIAL CENTER, UKIAH: REPLACEMENT OF EXISTING RESIDENTIAL CENTER
440 EAST HILL ROAD
WILLITS, CALIFORNIA 95490
MENDOCINO COUNTY
CALIFORNIA CONSERVATION CORP

Supervisor	Designed	Drawn
		Author

DSA Application No.
XX-XXXXXX

SHEET TITLE
WAREHOUSE BUILDING FIRE ALARM PLAN

DGS Project Number	NMR Project Number
XXXXX	18-6456

Reference North: NORTH
Sheet Scale: As indicated
Sheet Number: FA201W

ISSUE DATE
July 9, 2021

Plot Date: 3/22/2021 9:31:22 AM
File Name: BIM 360://CCC Willits Residential Center/E_CCC Willits _WAREHOUSE_ 2019-0228A.rvt

PLAN NOTES:

1.001 PROVIDE THE FOLLOWING CONDUITS WITH CABLING AS SPECIFIED:
(16) 4" C. (PHONE/DATA/FA/SEC)
(2) 4" SERVICE PROVIDER (AT&T)
(2) 2" SERVICE PROVIDER (TBD)
(4) 4" (SPARE)

1.002 PROVIDE 6' X 8' X DEPTH AS REQUIRED FLUSH IN GRADE CONCRETE MANHOLE WITH TRAFFIC RATED BOLT-DOWN COVER, ENGRAVED "SIGNAL".

1.003 PROVIDE THE FOLLOWING CONDUITS WITH CABLING AS SPECIFIED:
(16) 4" C. (PHONE/DATA/FA/SEC)
(4) 4" (SPARE)

1.004 PROVIDE THE FOLLOWING CONDUITS WITH CABLING AS SPECIFIED:
(9) 4" C. (PHONE/DATA/FA/SEC)

1.005 PROVIDE 3' X 5' X DEPTH AS REQUIRED FLUSH IN GRADE CONCRETE PULLBOX WITH TRAFFIC RATED BOLT-DOWN COVER, ENGRAVED "SIGNAL". COORDINATE FINAL LOCATION IN FIELD WITH LANDSCAPE.

1.006 PROVIDE THE FOLLOWING CONDUITS WITH CABLING AS SPECIFIED:
(7) 4" C. (PHONE/DATA/FA/SEC)

1.007 STUB AND CAP CONDUIT FOR FUTURE.

1.008 PROVIDE THE FOLLOWING CONDUITS WITH CABLING AS SPECIFIED:
(6) 4"C.

1.009 PROVIDE THE FOLLOWING CONDUITS WITH CABLING AS SPECIFIED:
(1) 2" C. (VOICE/DATA)
(1) 2" C. (FA)
(1) 2" (SECURITY)
(1) 2" C. (SPARE)

1.010 PROVIDE 3' X 3' X DEPTH AS REQUIRED FLUSH IN GRADE CONCRETE PULLBOX WITH TRAFFIC RATED BOLT-DOWN COVER, ENGRAVED "SIGNAL". COORDINATE FINAL LOCATION IN FIELD WITH LANDSCAPE.

1.011 PROVIDE THE FOLLOWING CONDUITS WITH CABLING AS SPECIFIED:
(2) 4"C.

1.012 PROVIDE THE FOLLOWING CONDUITS WITH CABLING AS SPECIFIED FOR EXTERIOR DATA CONNECTIONS:
(1) 1"C.

1.013 PROVIDE THE FOLLOWING CONDUITS WITH CABLING AS SPECIFIED FOR PHOTOVOLTAIC SYSTEM DATA CONNECTIONS:
(2) 3"C.

1.014 PROVIDE THE FOLLOWING CONDUITS WITH CABLING FOR IP CCTV CAMERA.
(1) 1-1/2" C.

1.015 EXTERIOR IP CCTV CAMERA MOUNTED TO LIGHT POLE. PROVIDE (1) OSP RATED CAT-6A CABLE PER SPECIFICATIONS. SEE SHEET T050 FOR MORE INFORMATION.

1.016 EXTERIOR IP CCTV CAMERA MOUNTED TO AMPHITHEATER STRUCTURE. MOUNT CAMERA TO CANOPY COLUMN. PROVIDE (1) OSP RATED CAT-6A CABLE PER SPECIFICATIONS. SEE SHEET T050 FOR MORE INFORMATION.

1.017 PROVIDE THE FOLLOWING CONDUITS WITH CABLING AS SPECIFIED FOR EV CHARGING STATION:
(1) 1-1/4" C.

1.018 PROVIDE 24" X 24" X DEPTH AS REQUIRED FLUSH IN GRADE CONCRETE PULLBOX WITH TRAFFIC RATED BOLT-DOWN COVER, ENGRAVED "SIGNAL". COORDINATE FINAL LOCATION IN FIELD WITH LANDSCAPE.

1.019 CONNECT TO IRRIGATION CONTROLLER(S) AS REQUIRED. VERIFY CONNECTION REQUIREMENTS AND EXACT LOCATION WITH IRRIGATION CONTRACTOR PRIOR TO ROUGH-IN.

SITE PLAN GENERAL NOTES:

1. CONTRACTOR SHALL EXERCISE EXTREME CAUTION IN EXCAVATING AND TRENCHING ON THIS SITE TO AVOID EXISTING DUCTS, PIPING OR CONDUITS, ETC., AND TO PREVENT HAZARDS TO PERSONNEL AND/OR DAMAGE TO EXISTING UNDERGROUND UTILITIES OR STRUCTURES WHETHER OR NOT SHOWN AND INSTALLED BY ANY OTHER CONTRACTS. THE ENGINEER IS NOT RESPONSIBLE FOR THE LOCATION OF UNDERGROUND UTILITIES OR STRUCTURES WHETHER OR NOT SHOWN OR DETAILED AND INSTALLED BY ANY OTHER CONTRACTS. THE CONTRACTOR SHALL IMMEDIATELY NOTIFY THE ENGINEER SHOULD SUCH UNIDENTIFIED CONDITIONS BE DISCOVERED. THESE DRAWINGS AND SPECIFICATIONS DO NOT INCLUDE THE NECESSARY ELEMENTS FOR CONSTRUCTION SAFETY.
2. CALL UNDERGROUND SERVICE ALERT (USA) AT 1 (800) 422-4133 OR APPLICABLE STATE AND LOCAL DIG SAFE OR UNDERGROUND ALERT HOTLINES PRIOR TO CONSTRUCTION START.
3. MINIMUM CONDUIT SIZE SHALL BE 3/4" - U.O.N.
4. MINIMUM CONDUCTOR SIZE SHALL BE #10 AWG. - U.O.N.
5. ALL SITE BRANCH CIRCUITS SHALL INCLUDE AN EQUIPMENT GROUND CONDUCTOR THAT, AT MINIMUM, MATCHES THE SIZE OF THE ASSOCIATED BRANCH CIRCUIT CONDUCTOR. WHERE MULTIPLE BRANCH CIRCUITS ARE ROUTED/GROUPED TOGETHER, THE EQUIPMENT GROUNDING CONDUCTOR SHALL MATCH THE SIZE OF THE LARGEST BRANCH CIRCUIT CONDUCTOR IN THE GROUP.
6. ALL ELECTRICAL EQUIPMENT MOUNTED OUTDOORS SHALL BE WEATHERPROOF (NEMA #3R).
7. ALL CONDUIT ONLY SHALL BE PROVIDED WITH A NYLON PULL STRING.
8. SEE ARCHITECTURAL/LANDSCAPE ARCHITECTURAL PLANS FOR EXACT LOCATIONS OF FIXTURES, PULLBOXES, MANHOLES, OTHER ELECTRICAL DEVICES, ETC. COORDINATE ALL UNDERGROUND STRUCTURES AND CONDUIT ROUTING WITH LANDSCAPE ARCHITECT PRIOR TO ROUGH-IN TO ENSURE THAT SUCH ITEMS ARE NOT PLACED IN CRITICAL LANDSCAPE PLANTING/HARDSCAPE AREAS.
9. UNLESS SPECIFICALLY SHOWN AS (E), (R), (ER), (D), EXISTING OR NON-BOLD, ALL

REFERENCE NORTH / TRUE NORTH

SIGNAL SITE PLAN - SOUTH

SCALE: 1" = 40'-0"

0' 20' 40' 80' 160'

IDENTIFICATION STAMP
DIV. OF THE STATE ARCHITECT
APP: 02-118630 INC:
REVIEWED FOR
SS ☐ FLS ☐ ACS ☑
DATE: 04/13/2021

OFFICE OF THE STATE FIRE MARSHAL
APPROVED FIRE AND PANIC ONLY
Approval of this plan does not authorize or approve any omission or deviation from applicable regulations. Final approval is subject to field inspection. One set of approved plans shall be available on the project site at all times.
PERMIT NO: 36-N-2332-CP
REVIEWED BY: LEO CATAYLO, OSFM
DATE: 4/1/2021

DGS GENERAL SERVICES
Department of General Services
State of California
Real Estate Services Division
Project Management & Development Branch
707 Third Street, Suite 4-105
West Sacramento, California 95605

NICHOLS MELBURG & ROSSETTO
ARCHITECTS + ENGINEERS
300 Knollcrest Drive
Redding, CA. 96002
(530) 222-3300 (530) 222-3538 FAX
http://www.nmrdesign.com

Copyright © 2019
All ideas, designs, arrangements and plans indicated or represented by this drawing are owned by, and the property of, NICHOLS, MELBURG and ROSSETTO and were created, evolved and developed for use on, and in connection with, the specified project. None of such ideas, designs, arrangements or plans shall be used by or disclosed to any person, firm or corporation for any purpose whatsoever without the written permission of NICHOLS, MELBURG and ROSSETTO.

LICENSE STAMPS

REGISTERED PROFESSIONAL ENGINEER
RAYMOND W. SWEET
No. E15610
12/31/2021
ELECTRICAL
STATE OF CALIFORNIA
Date Signed: 3/25/2021

CONSULTANT
tk1sc COLLABORATIVE
11870 Pierce Street, Suite 160
Riverside, California 92505
951.299.4160 www.tk1sc.com
Project Leader - Jerry Leonhardt
Electrical Lead - Reid Cordry
tk1sc Job #:2019-0228A

DRAWING STATUS
CONSTRUCTION DOCUMENTS

ISSUE

No.	Date	Description
1	10/20/2020	INITIAL PLAN REVIEW
2	01/22/2021	AGENCY RESUBMITTAL
3	03/22/2021	AGENCY RESUBMITTAL

If drawing is not 30" x 42" it is a reduced print

PROJECT
RESIDENTIAL CENTER, UKIAH: REPLACEMENT OF EXISTING RESIDENTIAL CENTER
440 EAST HILL ROAD
WILLITS, CALIFORNIA 95490
MENDOCINO COUNTY
CALIFORNIA CONSERVATION CORP

Supervisor	Designed	Drawn
		Author

DSA Application No.
02-118630

SHEET TITLE
SIGNAL SITE PLAN - SOUTH

DGS Project Number	NMR Project Number
000000000001826	18-6456

Reference North
Sheet Scale
Sheet Number
T020

ISSUE DATE
July 9, 2021

Plot Date: 3/22/2021 9:00:42 AM
File Name: BIM 360://CCC Willits Residential Center/E_CCC Willits_COMMON_2019-0228A.rvt

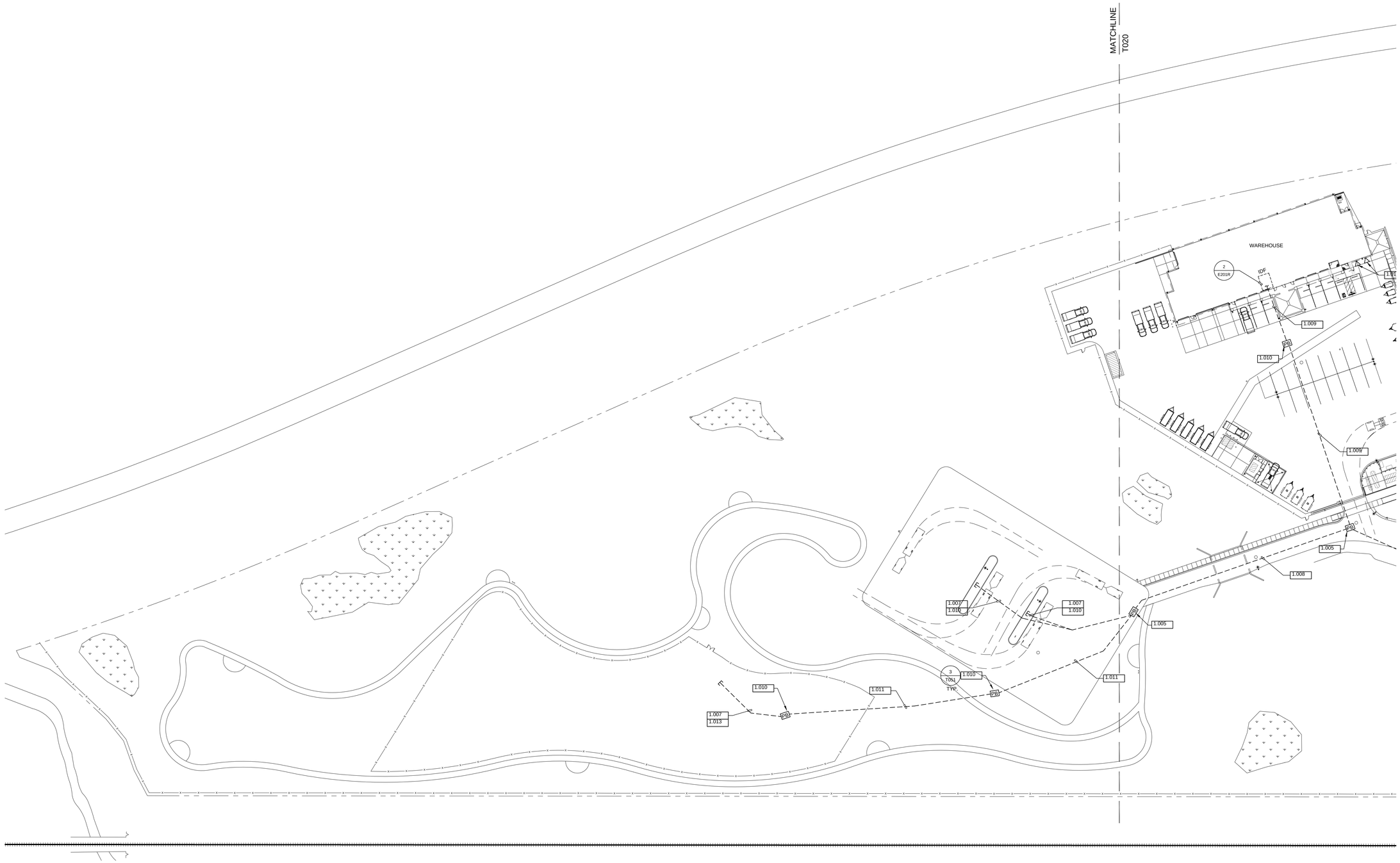

PLAN NOTES:

1.005 PROVIDE 3' X 5' X DEPTH AS REQUIRED FLUSH IN GRADE CONCRETE PULLBOX WITH TRAFFIC RATED BOLT-DOWN COVER, ENGRAVED "SIGNAL". COORDINATE FINAL LOCATION IN FIELD WITH LANDSCAPE.

1.007 STUB AND CAP CONDUIT FOR FUTURE.

1.008 PROVIDE THE FOLLOWING CONDUITS WITH CABLING AS SPECIFIED:
(6) 4"C.

1.009 PROVIDE THE FOLLOWING CONDUITS WITH CABLING AS SPECIFIED:
(1) 2" C. (VOICE/DATA)
(1) 2" C. (FA)
(1) 2" (SECURITY)
(1) 2" C. (SPARE)

1.010 PROVIDE 3' X 3' X DEPTH AS REQUIRED FLUSH IN GRADE CONCRETE PULLBOX WITH TRAFFIC RATED BOLT-DOWN COVER, ENGRAVED "SIGNAL". COORDINATE FINAL LOCATION IN FIELD WITH LANDSCAPE.

1.011 PROVIDE THE FOLLOWING CONDUITS AS SPECIFIED:
(2) 4"C. (FUTURE VOICE/DATA)

1.012 PROVIDE THE FOLLOWING CONDUITS WITH CABLING AS SPECIFIED FOR EXTERIOR DATA CONNECTIONS:
(1) 1"C.

1.013 PROVIDE THE FOLLOWING CONDUITS WITH CABLING AS SPECIFIED FOR PHOTOVOLTAIC SYSTEM DATA CONNECTIONS:
(2) 3"C.

1.018 PROVIDE 24" X 24" X DEPTH AS REQUIRED FLUSH IN GRADE CONCRETE PULLBOX WITH TRAFFIC RATED BOLT-DOWN COVER, ENGRAVED "SIGNAL". COORDINATE FINAL LOCATION IN FIELD WITH LANDSCAPE.

SITE PLAN GENERAL NOTES:

1. CONTRACTOR SHALL EXERCISE EXTREME CAUTION IN EXCAVATING AND TRENCHING ON THIS SITE TO AVOID EXISTING DUCTS, PIPING OR CONDUITS, ETC., AND TO PREVENT HAZARDS TO PERSONNEL AND/OR DAMAGE TO EXISTING UNDERGROUND UTILITIES OR STRUCTURES WHETHER OR NOT SHOWN AND INSTALLED BY ANY OTHER CONTRACTS. THE ENGINEER IS NOT RESPONSIBLE FOR THE LOCATION OF UNDERGROUND UTILITIES OR STRUCTURES WHETHER OR NOT SHOWN OR DETAILED AND INSTALLED BY ANY OTHER CONTRACTS. THE CONTRACTOR SHALL IMMEDIATELY NOTIFY THE ENGINEER SHOULD SUCH UNIDENTIFIED CONDITIONS BE DISCOVERED. THESE DRAWINGS AND SPECIFICATIONS DO NOT INCLUDE THE NECESSARY ELEMENTS FOR CONSTRUCTION SAFETY.
2. CALL UNDERGROUND SERVICE ALERT (USA) AT 1 (800) 422-4133 OR APPLICABLE STATE AND LOCAL DIG SAFE OR UNDERGROUND ALERT HOTLINES PRIOR TO CONSTRUCTION START.
3. MINIMUM CONDUIT SIZE SHALL BE 3/4" - U.O.N.
4. MINIMUM CONDUCTOR SIZE SHALL BE #10 AWG. - U.O.N.
5. ALL SITE BRANCH CIRCUITS SHALL INCLUDE AN EQUIPMENT GROUND CONDUCTOR THAT, AT MINIMUM, MATCHES THE SIZE OF THE ASSOCIATED BRANCH CIRCUIT CONDUCTOR. WHERE MULTIPLE BRANCH CIRCUITS ARE ROUTED/GROUPED TOGETHER, THE EQUIPMENT GROUNDING CONDUCTOR SHALL MATCH THE SIZE OF THE LARGEST BRANCH CIRCUIT CONDUCTOR IN THE GROUP.
6. ALL ELECTRICAL EQUIPMENT MOUNTED OUTDOORS SHALL BE WEATHERPROOF (NEMA #3R).
7. ALL CONDUIT ONLY SHALL BE PROVIDED WITH A NYLON PULL STRING.
8. SEE ARCHITECTURAL/LANDSCAPE ARCHITECTURAL PLANS FOR EXACT LOCATIONS OF FIXTURES, PULLBOXES, MANHOLES, OTHER ELECTRICAL DEVICES, ETC. COORDINATE ALL UNDERGROUND STRUCTURES AND CONDUIT ROUTING WITH LANDSCAPE ARCHITECT PRIOR TO ROUGH-IN TO ENSURE THAT SUCH ITEMS ARE NOT PLACED IN CRITICAL LANDSCAPE PLANTING/HARDSCAPE AREAS.
9. UNLESS SPECIFICALLY SHOWN AS (E), (R), (ER), (D), EXISTING OR NON-BOLD, ALL ELECTRICAL DEVICES SHOWN ARE NEW.

REFERENCE NORTH / TRUE NORTH

SIGNAL SITE PLAN - NORTH

SCALE: 1" = 40'-0"

0' 20' 40' 80' 160'

PLAN NOTES:

IDENTIFICATION STAMP
DIV. OF THE STATE ARCHITECT
APP: 02-118630 INC:
REVIEWED FOR
SS ☐ FLS ☐ ACS ☑
DATE: 04/13/2021

OFFICE OF THE STATE FIRE MARSHAL
APPROVED FIRE AND PANIC ONLY
Approval of this plan does not authorize or approve any omission or deviation from applicable regulations. Final approval is subject to field inspection. One set of approved plans shall be available on the project site at all times.
PERMIT NO: 28 N 2332-CP
REVIEWED BY: LEO CATAYLO, OSFM
DATE: 4 / /2021

DGS GENERAL SERVICES
Department of General Services
State of California
Real Estate Services Division
Project Management & Development Branch
707 Third Street, Suite 4-105
West Sacramento, California 95605

NICHOLS MELBURG & ROSSETTO
ARCHITECTS + ENGINEERS
300 Knollcrest Drive
Redding, CA. 96002
(530) 222-3300 (530) 222-3538 FAX
http://www.nmrdesign.com

Copyright © 2019
All ideas, designs, arrangements and plans indicated or represented by this drawing are owned by, and the property of, NICHOLS, MELBURG and ROSSETTO and were created, evolved and developed for use on, and in connection with, the specified project. None of such ideas, designs, arrangements or plans shall be used by, or disclosed to, any person, firm or corporation for any purpose whatsoever without the written permission of NICHOLS, MELBURG and ROSSETTO.

LICENSE STAMPS

REGISTERED PROFESSIONAL ENGINEER
RAYMOND W. SWOPE
No. E15610
12/31/2021
ELECTRICAL
STATE OF CALIFORNIA
Date Signed:
3/25/2021

CONSULTANT
tk1sc COLLABORATIVE
11870 Pierce Street, Suite 160
Riverside, California 92505
951.299.4160 www.tk1sc.com
Project Leader - Jerry Leonhardt
Electrical Lead - Reid Cordry
tk1sc Job #:2019-0228A

DRAWING STATUS
CONSTRUCTION DOCUMENTS

ISSUE

No.	Date	Description
1	10/20/2020	INITIAL PLAN REVIEW
2	01/22/2021	AGENCY RESUBMITTAL
3	03/22/2021	AGENCY RESUBMITTAL

If drawing is not 30" x 42" it is a reduced print

PROJECT
RESIDENTIAL CENTER, UKIAH: REPLACEMENT OF EXISTING RESIDENTIAL CENTER
440 EAST HILL ROAD
WILLITS, CALIFORNIA 95490
MENDOCINO COUNTY
CALIFORNIA CONSERVATION CORP

Supervisor	Designed	Drawn
		Author

DSA Application No.
02-118630

SHEET TITLE
SIGNAL SITE PLAN - NORTH

DGS Project Number	NMR Project Number
000000000001826	18-6456

Reference North
Sheet Scale
Sheet Number
T021

ISSUE DATE
July 9, 2021

Plot Date: 3/22/2021 9:00:43 AM
File Name: BIM 360://CCC Willits Residential Center/E_CCC Willits_COMMON_2019-0228A.rvt

IDENTIFICATION STAMP
DIV. OF THE STATE ARCHITECT
APP: 02-118630 INC:
REVIEWED FOR
SS ☐ FLS ☐ ACS ☑
DATE: 04/13/2021

			5	VOICE/DATA COMBINATION DEVICE	1
		9	6	DATA ONLY DEVICE	2
		10	7	WIRELESS ACCESS POINT DEVICE	3
		12	11	8	1 PORT DATA DEVICE	4

WHERE THE FOLLOWING SYMBOLS ARE INDICATED ON THE ELECTRICAL DRAWINGS ARCHITECTURAL DRAWINGS AND/OR STRUCTURED CABLING SYSTEM DRAWINGS:

THE FOLLOWING SHALL BE PROVIDED, AS DEPICTED IN THE FOLLOWING DIAGRAMMATIC CONNECTIVITY DETAIL.

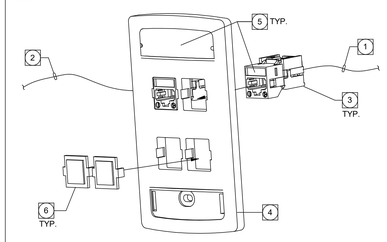

WHERE THE FOLLOWING SYMBOLS ARE INDICATED ON THE ELECTRICAL DRAWINGS ARCHITECTURAL DRAWINGS AND/OR STRUCTURED CABLING SYSTEM DRAWINGS:

THE FOLLOWING SHALL BE PROVIDED, AS DEPICTED IN THE FOLLOWING DIAGRAMMATIC CONNECTIVITY DETAIL.

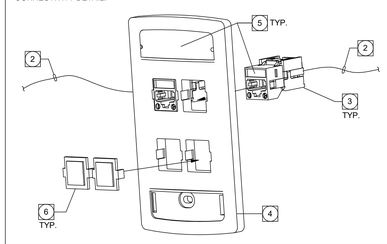

WHERE THE FOLLOWING SYMBOLS ARE INDICATED ON THE ELECTRICAL DRAWINGS ARCHITECTURAL DRAWINGS AND/OR STRUCTURED CABLING SYSTEM DRAWINGS:

Ⓐ

THE FOLLOWING SHALL BE PROVIDED, AS DEPICTED IN THE FOLLOWING DIAGRAMMATIC CONNECTIVITY DETAIL.

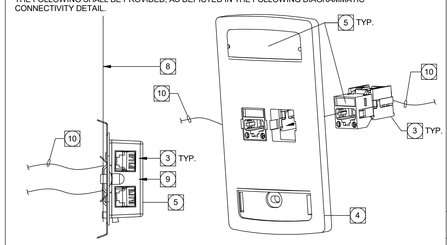

USE THIS OUTLET TYPE WHEN SHOWN ABOVE ACCESSIBLE CEILING SPACE

USE THIS OUTLET TYPE WHEN SHOWN ABOVE/IN AN INACCESSIBLE CEILING SPACE

WHERE THE FOLLOWING SYMBOLS ARE INDICATED ON THE ELECTRICAL DRAWINGS, ARCHITECTURAL DRAWINGS AND/OR STRUCTURED CABLING SYSTEM DRAWINGS:

THE FOLLOWING SHALL BE PROVIDED, AS DEPICTED IN THE FOLLOWING DIAGRAMMATIC CONNECTIVITY DETAIL.

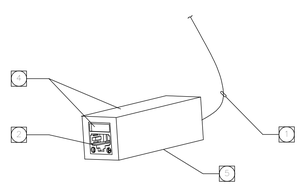

SPECIFIC NOTES

1. PROVIDE (1) CAT 6, 4 PAIR UTP CABLE(S) TO RESPECTIVE MDF/BDF/IDF VOICE RACK. COLOR OF CABLE(S) SHALL BE WHITE. TERMINATE STATION END(S) IN STATION CONNECTOR(S) PER SPECIFICATIONS 271000, SECTION 2.7. TERMINATE RACK END(S) ON PATCH PANEL(S) PER SPECIFICATIONS 271000, SECTION 2.7.
2. PROVIDE (1) CAT 6, 4 PAIR UTP CABLE(S) TO RESPECTIVE MDF/IDF DATA CABINET A U.O.N. COLOR OF CABLE(S) SHALL BE BLUE. TERMINATE STATION END(S) IN STATION CONNECTOR(S) PER SPECIFICATIONS 271000, SECTION 2.7. TERMINATE RACK END(S) ON PATCH PANEL(S) PER SPECIFICATIONS271000, SECTION 2.7.
3. PROVIDE STATION CONNECTOR PER SPECIFICATIONS.
4. PROVIDE COVERPLATE PER SPECIFICATIONS. COVERPLATE MATERIAL AND FINISH SHALL MATCH ADJACENT/NEARBY POWER COVERPLATES. PROVIDE FLOOR BOX, POWER POLE & MODULAR FURNITURE DEVICE BRACKETS/CUSTOM ADAPTERS AS REQUIRED FOR A COMPLETE INSTALLATION. INCLUDE ALL COSTS IN BASE BID.
6. PROVIDE COVERPLATE LABELING PER SPECIFICATIONS. SEE SPECIFICATIONS FOR ALL OTHER LABELING REQUIREMENTS.
8. BLANK INSERT. ALL UNUSED OPENINGS SHALL BE COVERED WITH A BLANK INSERT MATCHING THE COLOR OF THE FACEPLATE.
7. FOR WALL PHONE DEVICES, PROVIDE A STAINLESS STEEL FACEPLATE WITH STANDARD MOUNTING POSTS TOP AND BOTTOM. MOUNT AT 44" AFF UNLESS OTHERWISE INDICATED ON PLANS.
8. INSTALL DEDICATED SUSPENDED CEILING WIRE/HANGAR OR SUPPORT ROD/ROD HANGAR DIRECTLY TO STRUCTURAL CEILING ABOVE TO SUPPORT WAP 2-PORT HOUSING.
9. PROVIDE (1) SURFACE MOUNT, PLENUM-RATED TWO-PORT HOUSING. (LEVITON 41089-2WP OR EQUAL) MOUNTED TO IN-CEILING BRACKET WITH SPRING WIRE MOUNT(LEVITON 49223-CBC OR EQUAL) WHERE APPLICABLE. PROVIDE 15FT SLACK LOOP NEAR WAP SUSPENSION POINT.
10. PROVIDE (1) CAT 6A, 4 PAIR UTP CABLE(S) TO RESPECTIVE MDF/IDF DATA CABINET A U.O.N. COLOR OF CABLE(S) SHALL BE BLUE. TERMINATE STATION END(S) IN STATION CONNECTOR(S) PER SPECIFICATIONS 271000, SECTION 2.7. TERMINATE RACK END(S) ON PATCH PANEL(S) PER SPECIFICATIONS 271000, SECTION 2.7.

GENERAL NOTES

1. INSTALLATION OF EQUIPMENT AND WIRING MUST MEET ALL APPLICABLE CODES AND STANDARDS INCLUDING BUT NOT LIMITED TO NEC, NFPA, ANSI/EIA/TIA AND ISO 9001.
2. EQUIPMENT AND MATERIALS MUST COMPLY WITH UL LISTING AND EACH ITEM STAMPED OR LABELED AS SUCH.
3. COMPLIANCE WITH ANSI/TIA/EIA 569-C. COMMERCIAL BUILDING STANDARDS FOR TELECOMMUNICATIONS PATHWAYS AND SPACES.
4. COMPLIANCE WITH ANSI/TIA/EIA 568-D. COMMERCIAL BUILDING TELECOMMUNICATIONS CABLING STANDARDS.
5. DRAWINGS AND LAYOUTS ARE PRIMARILY DIAGRAMMATIC. CONTRACTOR IS RESPONSIBLE FOR FINAL FOOTAGES AND EXACT LOCATIONS.
6. CONTRACTOR SHALL NOTE IN WRITING. ANY DISCREPANCIES BETWEEN DRAWINGS AND SPECIFICATIONS. AS SUCH DISCREPANCIES ARISE, THE MORE STRINGENT SHALL TAKE PRECEDENCE.
7. COMMUNICATIONS CABLES (ANY TYPE) ROUTED THRU FURNITURE SYSTEMS SHALL BE ROUTED VIA DEDICATED COMMUNICATIONS PATHWAY, WHEN AVAILABLE. WHEN DEDICATED COMMUNICATIONS PATHWAY IS UNAVAILABLE, THE ABOVE-MENTIONED CABLES SHALL BE ROUTED IN A BARRIERED SYSTEMS FURNITURE RACEWAY SEPARATE FROM POWER CONDUCTORS PER EIA/TIA STANDARDS AND NEC REQUIREMENTS.
8. CONTRACTOR SHALL VERIFY SYSTEMS FURNITURE TYPE AND CABLE ROUTING/ FACEPLATE LOCATION WITHIN SYSTEMS FURNITURE PRIOR TO BID. INCLUDE ALL COSTS IN BASE BID.
9. REFERENCE ALL ELECTRICAL DRAWINGS (SHELL & T.I.).
10. REFERENCE ALL STRUCTURED CABLING SYSTEM DRAWINGS (SCS-SHEETS).
11. REFERENCE ALL ARCHITECTURAL DRAWINGS (SHELL & T.I.).
12. REFERENCE ALL ELECTRICAL AND STRUCTURED CABLING SYSTEM SPECIFICATIONS (ALL 16600 NUMBERED SPECIFICATIONS).
13. CONTRACTOR SHALL UTILIZE CONDUIT(S)/SLEEVE(S) SEQUENTIALLY, MAXIMIZING THE CABLE FILL IN EACH BEFORE UTILIZING THE NEXT CONDUIT(S)/SLEEVE(S). MAXIMUM ALLOWABLE CONDUIT FILL SHALL BE BASED ON NEC TABLES FOR CONDUIT FILL.

OFFICE OF THE STATE FIRE MARSHAL
APPROVED FIRE AND PANIC ONLY
Approval of this plan does not authorize or approve any omission or deviation from applicable regulations. Final approval is subject to field inspection. One set of approved plans shall be available on the project site at all times.
PERMIT NO: 36-N-2332-CP
REVIEWED BY: LEO CATAYLO, OSFM
DATE: 4/1/2021

DGS GENERAL SERVICES
Department of General Services
State of California
Real Estate Services Division
Project Management & Development Branch
707 Third Street, Suite 4-105
West Sacramento, California 95605

NICHOLS MELBURG & ROSSETTO
ARCHITECTS + ENGINEERS
300 Knollcrest Drive
Redding, CA. 96002
(530) 222-3300 (530) 222-3538 FAX
http://www.nmrdesign.com

Copyright © 2019
All ideas, designs, arrangements and plans indicated or represented by this drawing are owned by, and the property of, NICHOLS, MELBURG and ROSSETTO and were created, evolved and developed for use on, and in conjunction with, the specified project. None of such ideas, designs, arrangements or plans shall be used by, or disclosed to any person, firm or corporation for any purpose whatsoever without the written permission of NICHOLS, MELBURG and ROSSETTO.

LICENSE STAMPS

REGISTERED PROFESSIONAL ENGINEER
RAYMOND W. SWEET
No. E15610
12/31/2021
ELECTRICAL
STATE OF CALIFORNIA
Date Signed: 3/25/2021

CONSULTANT

tk1sc COLLABORATIVE
11870 Pierce Street, Suite 160
Riverside, California 92505
951.299.4160 www.tk1sc.com
Project Leader - Jerry Leonhardt
Electrical Lead - Reid Cordry
tk1sc Job #:2019-0228A

DRAWING STATUS
CONSTRUCTION DOCUMENTS

ISSUE

No.	Date	Description
1	10/20/2020	INITIAL PLAN REVIEW
2	01/22/2021	AGENCY RESUBMITTAL
3	03/22/2021	AGENCY RESUBMITTAL

If drawing is not 30" x 42" it is a reduced print

PROJECT
RESIDENTIAL CENTER, UKIAH: REPLACEMENT OF EXISTING RESIDENTIAL CENTER
440 EAST HILL ROAD
WILLITS, CALIFORNIA 95490
MENDOCINO COUNTY
CALIFORNIA CONSERVATION CORP

Supervisor	Designed	Drawn
		Author

DSA Application No.
02-118630

SHEET TITLE
FACEPLATE DETAILS

DGS Project Number
0000000000001826
NMR Project Number
18-6456

Reference North: NORTH
Sheet Scale
Sheet Number
T050

ISSUE DATE
July 9, 2021

Plot Date: 3/22/2021 9:00:45 AM
File Name: BIM 360://CCC Willits Residential Center/E_CCC Willits_COMMON_2019-0228A.rvt

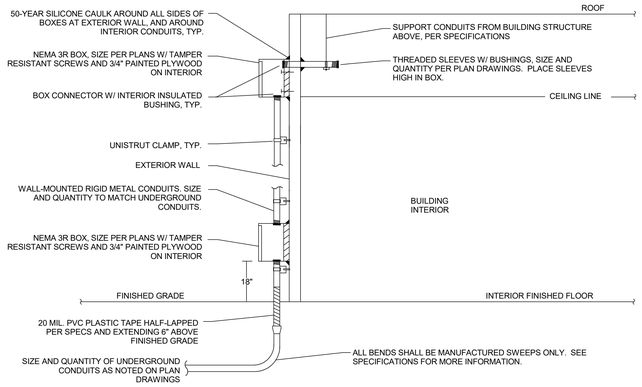

NOTES:

1. ALL BOXES/PLYWOOD TO BE SECURED TO BUILDING STRUCTURE USING MIN. 3/8" X 2" WALL ANCHORS/LAG BOLTS.
2. 50-YEAR SILICONE CAULK AROUND ALL PENETRATIONS, BOXES AND ALL THREADS AS REQUIRED.
3. SEAL ALL UNDERGROUND CONDUITS PER COMMUNICATION PATHWAY NOTES, GENERAL PROJECT NOTES, AND PROJECT SPECIFICATIONS.
4. SEE SPECIFICATIONS FOR MORE INFORMATION.

TYPICAL EXTERIOR JUNCTION BOX DETAIL

SCALE: N.T.S. — 2

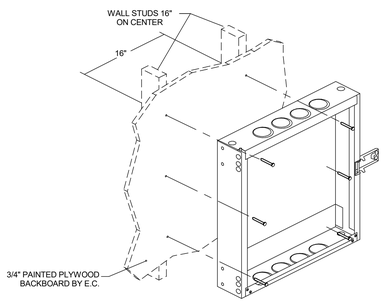

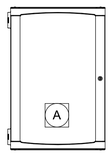

MOUNTING NOTES:

1. THE REAR FRAME MUST BE SECURED TO WALL AT (6) LOCATIONS AND ARE INTENDED TO GO THROUGH 3/4" PLYWOOD BACKBOARD INTO WALL:
   - METAL STUD: PROVIDE #14 x 3" SMS WITH HEX WASHER HEADS CENTERED ON METAL WALL STUDS, 6 TOTAL, 3 PER STUD EQUALLY SPACED.
   - WOOD STUD: PROVIDE 1/4" DIAMETER X 3" LAG SCREWS AND WASHERS CENTERED ON WOOD WALL STUDS, 6 TOTAL, 3 PER STUD EQUALLY SPACED.
   - C.M.U. WALL: PROVIDE 3/8" DIAMETER SIMPSON TITEN HD X 3 1/2" EMBEDMENT, 6 TOTAL, IN 2 COLUMNS OF 3 FASTENERS EACH, EQUALLY SPACED.
2. CONTRACTOR TO INSTALL CABINET TO BACKBOARD. E.C. TO INSTALL PAINTED PLYWOOD BACKBOARD. SEE SPECIFICATIONS FOR MORE INFORMATION.
3. MAXIMUM TOTAL EQUIPMENT WEIGHT: 200 POUNDS.

WALL MOUNT NETWORK CABINET NOTES:

A WALL MOUNT NETWORK CABINET, (CPI PN#11840-748, CPI PN#40975-001, CPI PN#40973-001).

IDF ROOM - WALL MOUNT NETWORK CABINET

SCALE: N.T.S. — 4

RECEPTACLE MOUNTING KEY NOTES:

1. 4S DEEP NEMA JUNCTION BOX WITH RECEPTACLES PER PLAN ATTACHED SECURELY TO LADDER RUNWAY. VERIFY CORRECT SIDE OF LADDER RUNWAY/EXACT MOUNTING LOCATION ON LADDER RUNWAY WITH OWNER AND SCS CONTRACTOR PRIOR TO ROUGH-IN. E.C. TO INSTALL JUNCTION BOX ON SIDE OF LADDER RUNWAY ONLY WITH RECEPTACLE PERPENDICULAR TO FLOOR. JUNCTION BOX SHALL NOT BE INSTALLED ON TOP OR BOTTOM OF LADDER RUNWAY.
2. PERMANENT LABELS INDICATING PANEL ID, CIRCUIT NUMBER(S) AND NEMA/IEC RECEPTACLE TYPE. PROVIDE LABELS ON FACE OF BOX.
3. CONDUIT AND BRANCH CIRCUIT PER PLAN. ROUTE CONDUITS TO PANEL(S) ABOVE ACCESSIBLE CEILING-IF PROVIDED ON PROJECT. IN NO CASE, SHALL CONDUITS BE ROUTED THROUGH/WITHIN LADDER RUNWAY VERTICAL WIRE MANAGERS OR OTHERWISE OBSTRUCT USE OF RACKS BY COMMUNICATIONS EQUIPMENT OR CABLING.
4. LADDER RUNWAY SYSTEM SHOWN HERE FOR REFERENCE ONLY. SEE LADDER RUNWAY SYSTEM DETAIL ON THIS SHEET FOR LADDER RUNWAY REQUIREMENTS.
5. EQUIPMENT RACK AND VERTICAL WIRE MANAGER BY SCS CONTRACTOR. SHOWN FOR REFERENCE ONLY. EXACT EQUIPMENT CONFIGURATION MAY VARY.
6. JUNCTION BOX SHALL NOT OBSTRUCT VERTICAL WIRE MANAGERS OR EQUIPMENT RACK MOUNTING PLATES.

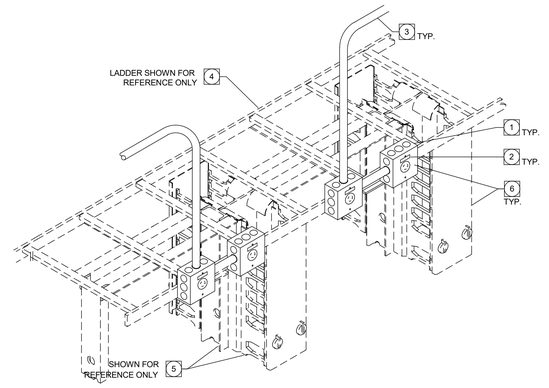

MDF/IDF ROOM LADDER TRAY RECEPTACLE MOUNTING DETAIL

SCALE: NTS — 1

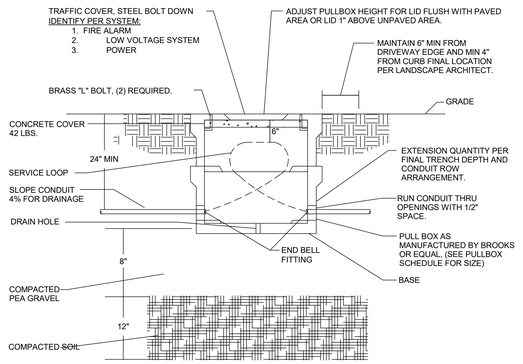

PULL BOX NOTES

1. ALL BOXES SHALL BE SET ON A MINIMUM 8" GRAVEL BASE WITH 1/2" DIAMETER GRAVEL.
2. ALL INCIDENTAL CONCRETE SHALL BE REMOVED FROM BOXES.
3. PROVIDE WATERTIGHT SPLICES AND CAPS FOR POWER CONDUCTORS.
4. PROVIDE SEALING GEL IN ALL CONDUITS (BOTH W/ CONDUCTORS AND IN EMPTY SPARE CONDUITS.) THE GEL SHALL BE INSERTED IN THE CONDUIT TO A DEPTH OF 6" AND FLUSH W/ THE END OF THE CONDUIT. THE GEL SHALL BE MANUFACTURED BY 3M #4442 RE-ENTERABLE ENCAPSULANT.
5. PROVIDE IDENTIFYING TAGS ON ALL POWER AND COMMUNICATION CONDUCTORS IN PULLBOXES.
6. PULLBOX SHALL BE SIZED PER N.E.C. REQUIREMENTS.

PULL BOX DETAIL

SCALE: N.T.S. — 3

IDENTIFICATION STAMP
DIV. OF THE STATE ARCHITECT
APP: 02-118630 INC:
REVIEWED FOR
SS ☐ FLS ☐ ACS ☑
DATE: 04/13/2021

OFFICE OF THE STATE FIRE MARSHAL
APPROVED FIRE AND PANIC ONLY
Approval of this plan does not authorize or approve any omission or deviation from applicable regulations. Final approval is subject to field inspection. One set of approved plans shall be available on the project site at all times.
PERMIT NO.: 28-N-2332-CP
REVIEWED BY: LEO CATAYLO, OSFM
DATE: 4/1/2021

GENERAL SERVICES
Department of General Services
State of California
Real Estate Services Division
Project Management & Development Branch
707 Third Street, Suite 4-105
West Sacramento, California 95605

NICHOLS MELBURG & ROSSETTO
ARCHITECTS + ENGINEERS
300 Knollcrest Drive
Redding, CA. 96002
(530) 222-3300 (530) 222-3538 FAX
http://www.nmrdesign.com

Copyright © 2019
All ideas, designs, arrangements and plans indicated or represented by this drawing are owned by, and the property of, NICHOLS, MELBURG and ROSSETTO and were created, evolved and developed for use on, and in conjunction with, the specified project. None of such ideas, designs, arrangements or plans shall be used by, or disclosed to any person, firm or corporation for any purpose whatsoever without the written permission of NICHOLS, MELBURG and ROSSETTO.

LICENSE STAMPS

REGISTERED PROFESSIONAL ENGINEER RAYMOND W. SWOPE No. E15610 12/31/2021 MECHANICAL ENGINEER STATE OF CALIFORNIA
Date Signed: 3/25/2021

CONSULTANT
tk1sc COLLABORATIVE
11870 Pierce Street, Suite 160
Riverside, California 92505
951.299.4160 www.tk1sc.com
Project Leader - Jerry Leonhardt
Electrical Lead - Reid Cordry
tk1sc Job #:2019-0228A

DRAWING STATUS
CONSTRUCTION DOCUMENTS

ISSUE

No.	Date	Description
1	10/20/2020	INITIAL PLAN REVIEW
2	01/22/2021	AGENCY RESUBMITTAL
3	03/22/2021	AGENCY RESUBMITTAL

If drawing is not 30" x 42" it is a reduced print

PROJECT
RESIDENTIAL CENTER, UKIAH: REPLACEMENT OF EXISTING RESIDENTIAL CENTER
440 EAST HILL ROAD
WILLITS, CALIFORNIA 95490
MENDOCINO COUNTY
CALIFORNIA CONSERVATION CORP

Supervisor	Designed	Drawn
		Author

DSA Application No.
02-118630

SHEET TITLE
DETAILS

DGS Project Number	NMR Project Number
0000000000001826	18-6456

Reference North: NORTH
Sheet Scale:
Sheet Number: T051

ISSUE DATE
July 9, 2021

Plot Date: 3/22/2021 9:00:46 AM
File Name: BIM 360://CCC Willits Residential Center/E_CCC Willits_COMMON_2019-0228A.rvt

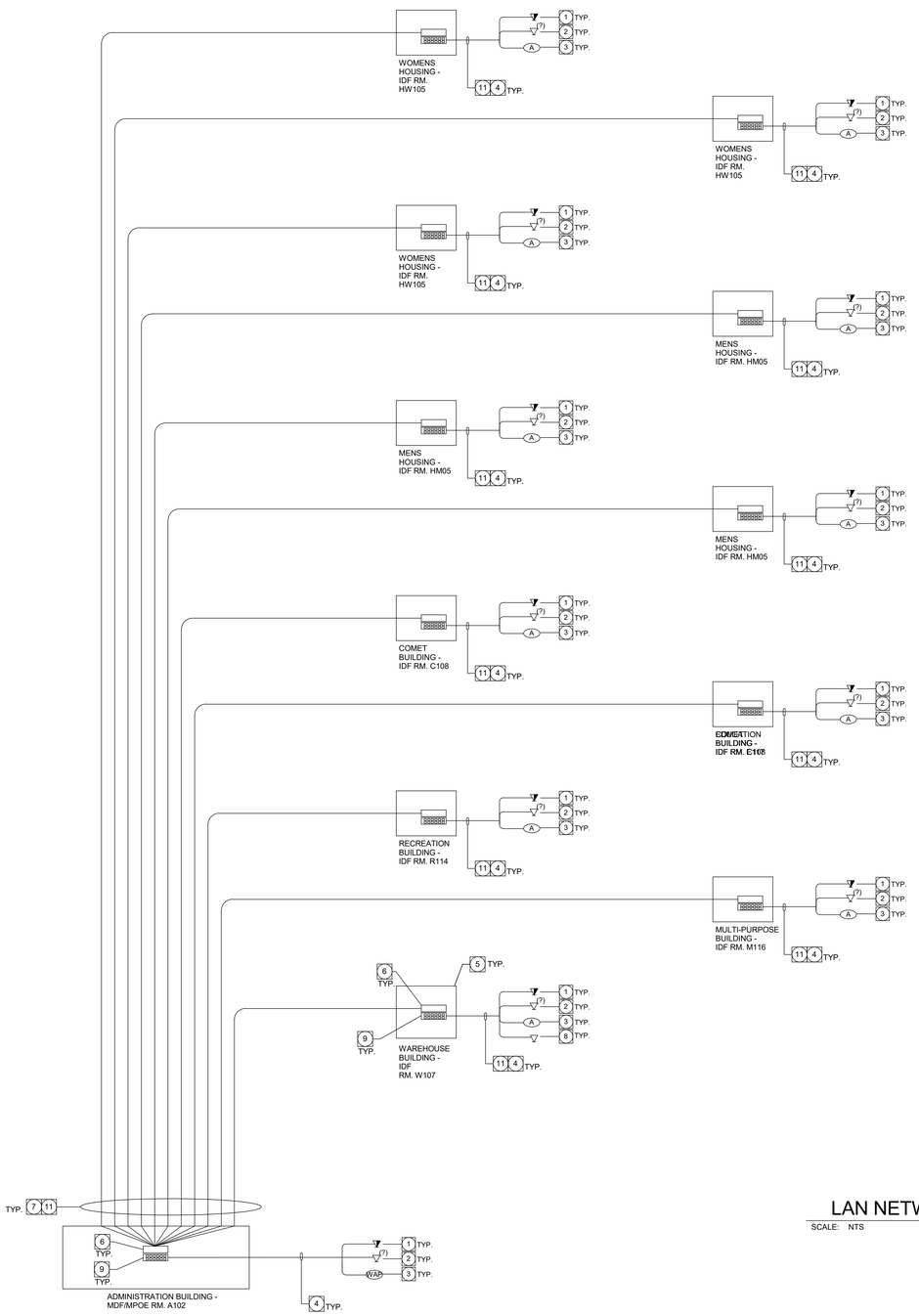

LAN NETWORK BLOCK DIAGRAM

SCALE: NTS

1

SYSTEM BLOCK DIAGRAM KEY NOTES:

1. CAT-6 VOICE/DATA COMBO WALL OUTLET. QUANTITY AND LOCATIONS PER PLAN DRAWINGS. SEE SPECIFICATIONS AND FACEPLATE DETAILS FOR MORE INFORMATION.
2. CAT-6 DATA OUTLET WALL OR FLOOR MOUNTED. NUMBER IN PARENTHESES (?) INDICATES REQUIRED QUANTITY OF CABLES AND OUTLETS. SEE FACEPLATE DETAILS FOR MORE INFORMATION. QUANTITY AND LOCATIONS PER PLAN DRAWINGS.
3. WIRELESS ACCESS POINTS OUTLET. WAP ELECTRONICS ARE OFOI. QUANTITY AND LOCATIONS PER PLAN DRAWINGS. SEE FACEPLATE DETAILS AND SPECIFICATIONS FOR MORE INFORMATION.
4. PROVIDE CATEGORY-6 UTP 4-PAIR CABLE(S). INSTALL IN CONDUIT WHEN PLACED IN OPEN CEILINGS AND INACCESSIBLE CEILINGS. CABLE QUANTITIES AT EACH DEVICE PER PLAN DRAWINGS AND FACEPLATE DETAILS. TERMINATE ON FACEPLATE AT DEVICE LOCATION AND ON CAT-6 PATCH PANEL AT IDF LOCATION. SEE PLAN DRAWINGS FOR LOCATIONS AND QUANTITIES. SEE FACEPLATE DETAILS FOR MORE INFORMATION.
5. MDF/IDF RACK, COMPLETE WITH CATEGORY-6 PATCH PANELS, FIBER OPTIC CABLE ENCLOSURE, HORIZONTAL WIRE MANAGERS, VERTICAL WIRE MANAGERS, PATCH CORDS, ETC. AS REQUIRED TO ACCOMMODATE ALL WORK ON THIS PROJECT. SEE FLOOR PLANS FOR QUANTITY AND LOCATIONS. SEE SPECIFICATIONS FOR MORE INFORMATION.
6. RACK MOUNT FIBER OPTIC CABLE CONNECTOR HOUSING COMPLETE WITH ALL CONNECTORS, PANELS, ADAPTERS, FAN OUT KITS, FIBER PATCH CORDS, ETC. PER SPECIFICATIONS. TERMINATE ALL STRANDS BOTH ENDS. SEE SPECIFICATIONS FOR ADDITIONAL INFORMATION.
7. SINGLE MODE/MULTI-MODE, INDOOR/OUTDOOR FIBER OPTIC BACKBONE CABLE AND CONDUIT, STRAND COUNT PER SPECIFICATIONS. TERMINATE ALL STRANDS BOTH ENDS. SEE SPECIFICATIONS FOR ADDITIONAL INFORMATION. REFER TO SITE PLAN FOR UNDERGROUND PATHWAY INFORMATION.
   - (1) 12-STRANDS OS2 SINGLE-MODE INDOOR/OUTDOOR FIBER OPTIC BACKBONE FOR EACH IDF IN 1-1/4" INNERDUCT. USE LC CONNECTORS ON BOTH ENDS.SEE SPECIFICATIONS FOR MORE INFORMATION.
   - (1) 12-STRANDS OM4 MULTI-MODE INDOOR/OUTDOOR FIBER OPTIC BACKBONE FOR EACH IDF in 1-1/4" INNERDUCT. USE LC CONNECTORS ON BOTH ENDS.SEE SPECIFICATIONS FOR MORE INFORMATION.
   - (2) 25 PAIR CATEGORY 5E POWER SUM TWISTER PAIR VOICE AND DATA CABLE. SEE SPECIFICATIONS FOR MORE INFORMATION.
8. FLUSH 5S DEEP J-BOX WITH WEATHERPROOF BLANK COVER AND CAT-6 CABLE AND OUTLET. SEE FACE PLATE DETAILS.
9. RACK MOUNT CATEGORY-6 AND 6A PATCH PANELS. QUANTITY AS REQUIRED TO TERMINATE ALL CAT-6 CABLES ON THIS PROJECT. SEE SPECIFICATIONS FOR MORE INFORMATION.
10. WALL MOUNT FIBER OPTIC CABLE CONNECTOR HOUSING COMPLETE WITH ALL CONNECTORS, PANELS, ADAPTERS, FAN OUT KITS, FIBER PATCH CORDS, ETC. PER SPECIFICATIONS. TERMINATE ALL STRANDS BOTH ENDS WITH LC CONNECTORS. SEE SPECIFICATIONS FOR ADDITIONAL INFORMATION.
11. PROVIDE CATEGORY-6A UTP 4-PAIR CABLE(S) FOR WIRELESS ACCESS POINT. INSTALL IN CONDUIT WHEN PLACED IN OPEN CEILINGS AND INACCESSIBLE CEILINGS. CABLE QUANTITIES AT EACH DEVICE PER PLAN DRAWINGS AND FACEPLATE DETAILS. TERMINATE ON FACEPLATE AT DEVICE LOCATION AND ON CAT-6A PATCH PANEL AT IDF LOCATION. SEE PLAN DRAWINGS FOR LOCATIONS AND QUANTITIES. SEE FACEPLATE DETAILS FOR MORE INFORMATION.

HORIZONTAL CATEGORY-6 CABLING SYSTEM NOTES:

1. CONTRACTOR TO PROVIDE ALL CABLES, JACKS, FACE PLATES, PATCH PANELS, WIRE MANAGERS, CABLE SUPPORTS, PATCH CORDS, RACKS, CABINETS, LADDER TRAY, GROUNDING, AND ANY ADDITIONAL HARDWARE AND COMPONENTS FOR A COMPLETE AND OPERABLE SYSTEM.
2. CONTRACTOR TO INSTALL CAT-6 UTP 4-PAIR CABLE FROM DEVICE TO PATCH PANEL IN IDF/MDF ROOMS IN THE QUANTITIES AND LOCATIONS SHOWN ON THE PLAN DRAWINGS AND SPECIFICATIONS.
3. TERMINATE ALL CAT-6 CABLES ON CATEGORY-6 PATCH PANELS(S) IN IDF RACK/CABINET(S). PROVIDE SUFFICIENT PATCH PANELS TO TERMINATE ALL CABLES.
4. CONTRACTOR TO PROVIDE AND INSTALL ALL CONDUIT SLEEVES AND FIRESTOP SYSTEMS AS NEEDED AND AS REQUIRED BY CODE AND DISTRICT STANDARDS.
5. CONTRACTOR TO ROUTE AND SUPPORT CABLE RUNS VIA J-HOOKS LOCATED ABOVE ACCESSIBLE CEILING SPACES. J-HOOKS SHALL NOT BE SPACED FURTHER THAN 48" FROM EACH OTHER. INSTALL CABLES IN CONDUIT WHEN TRAVELING ACROSS INACCESSIBLE CEILINGS, HARD LID CEILINGS, AND OPEN CEILINGS. PAINT CONDUIT TO MATCH SURROUNDING SURFACES WHEN INSTALLED IN OPEN CEILINGS AND EXPOSED AREAS.
6. VERIFY ALL QUANTITIES AND LOCATIONS WITH PLAN DRAWINGS AND DISTRICT SPECIFICATIONS PRIOR TO ROUGH-IN.
7. PROVIDE ALL PATCH CORDS, LABELS AND ANY ADDITIONAL HARDWARE AND EQUIPMENT FOR A COMPLETE AND OPERABLE SYSTEM.
8. PROVIDE ALL PATCH CORDS IN THE COLORS, LENGTHS AND QUANTITIES AS INDICATED IN DISTRICT SPECIFICATIONS.
9. CONTRACTOR SHALL EXERCISE EXTREME CAUTION TO NOT DISRUPT OTHER SYSTEMS DURING INSTALLATION.

LAN AND IP SYSTEMS GENERAL NOTES:

1. DRAWINGS AND LAYOUTS ARE PRIMARILY DIAGRAMMATIC IN NATURE. CONTRACTOR IS RESPONSIBLE FOR FINAL FOOTAGES AND EXACT LOCATIONS.
2. REFERENCE SPECIFICATIONS FOR ADDITIONAL INFORMATION AND REQUIREMENTS.
3. IN THE IDF ROOMS, PROVIDE ALL RACKS, CABINETS, LADDER TRAY, VERTICAL AND HORIZONTAL WIRE MANAGERS, GROUNDING AND BONDING, TELECOM BUS BARS, POWER STRIPS, MOUNTING HARDWARE, RACK MOUNTED SHELVES, CABLE SUPPORTS, HANGER WIRE/ROD, SLEEVES, D-RINGS, AND ALL OTHER COMPONENTS AS REQUIRED PER SPECIFICATIONS AND FOR A COMPLETE AND FULLY FUNCTIONAL SYSTEM.
4. CONTRACTOR SHALL PROVIDE ALL FIBER OPTIC RACK-MOUNTED ENCLOSURES, PANELS, BREAKOUT KITS, PANELS, CONNECTORS, COUPLERS, ADAPTERS, SPLICE TRAYS, PATCH CORDS, GROUNDING CONNECTIONS, AND ALL OTHER COMPONENTS NECESSARY FOR A COMPLETE AND OPERABLE FIBER OPTIC CABLING SYSTEM.
5. ALL LAN, WIRELESS LAN AND ACTIVE ELECTRONICS INCLUDING BUT NOT LIMITED TO LAN SWITCHES, GBIC MODULES, UNINTERRUPTIBLE POWER SUPPLIES (UPS), LAN SERVERS, WIRELESS ACCESS POINTS ROUTERS, INDIVIDUAL WORKSTATIONS AND MONITORS SHALL BE OWNER FURNISHED OWNER INSTALLED UNLESS OTHERWISE NOTED ON THE PLAN DRAWINGS AND SPECIFICATIONS.
6. ALL FIBER INSTALLED BETWEEN MDF AND IDF ROOMS SHALL BE 12-STRAND SINGLEMODE OS2 AND 12-STRAND OS4 MM UNLESS OTHERWISE NOTED IN PROJECT SPECIFICATIONS.
7. PROVIDE AND INSTALL ALL CAT-6 PATCH CORDS AND FIBER OPTIC PATCH CORDS IN THE COLORS, QUANTITIES AND LENGTHS PER SPECIFICATIONS. INSTALL ALL PATCH CORDS TO THE OWNER'S SATISFACTION. VERIFY PATCH CORD COLOR AND LENGTHS WITH OWNER PRIOR TO ORDERING MATERIALS. UNLESS OTHERWISE NOTED IN SPECIFICATIONS OR PLAN DRAWINGS, PROVIDE ONE (1) 7-FOOT AND ONE (1) 10-FOOT CAT-6 PATCH CORD FOR EVERY CAT-6 CABLE TERMINATED. INCLUDE ALL COSTS IN BASE BID.
8. VERIFY ALL QUANTITIES AND LOCATIONS WITH PLAN DRAWINGS AND SPECIFICATIONS.

IDENTIFICATION STAMP
DIV. OF THE STATE ARCHITECT
APP: 02-118630 INC:
REVIEWED FOR
SS ☐ FLS ☐ ACS ☑
DATE: 04/13/2021

OFFICE OF THE STATE FIRE MARSHAL
APPROVED FIRE AND PANIC ONLY
Approval of this plan does not authorize or approve any omission or deviation from applicable regulations. Final approval is subject to field inspection. One set of approved plans shall be available on the project site at all times.
PERMIT NO.: 26 N 2332-CP
REVIEWED BY: LEO CATAYLO, OSFM
DATE: 4/1/2021

GENERAL SERVICES
Department of General Services
State of California
Real Estate Services Division
Project Management & Development Branch
707 Third Street, Suite 4-105
West Sacramento, California 95605

NICHOLS MELBURG & ROSSETTO ARCHITECTS + ENGINEERS
300 Knollcrest Drive
Redding, CA. 96002
(530) 222-3300 (530) 222-3538 FAX
http://www.nmrdesign.com

Copyright © 2019
All ideas, designs, arrangements and plans indicated or represented by this drawing are owned by, and the property of, NICHOLS, MELBURG and ROSSETTO and were created, evolved and developed for use on, and in connection with, the specified project. None of such ideas, designs, arrangements or plans shall be used by, or disclosed to any person, firm or corporation for any purpose whatsoever without the written permission of NICHOLS, MELBURG and ROSSETTO.

LICENSE STAMPS

REGISTERED PROFESSIONAL ENGINEER RAYMOND W. SIMONSEN No. E15610 12/31/2021 ELECTRICAL STATE OF CALIFORNIA
Date Signed 3/25/2021

CONSULTANT
tk1sc COLLABORATIVE
11870 Pierce Street, Suite 160
Riverside, California 92505
951.299.4160 www.tk1sc.com
Project Leader - Jerry Leonhardt
Electrical Lead - Reid Cordry
tk1sc Job #:2019-0228A

DRAWING STATUS
CONSTRUCTION DOCUMENTS

ISSUE

No.	Date	Description
1	10/20/2020	INITIAL PLAN REVIEW
2	01/22/2021	AGENCY RESUBMITTAL
3	03/22/2021	AGENCY RESUBMITTAL

If drawing is not 30" x 42" it is a reduced print

PROJECT
RESIDENTIAL CENTER, UKIAH: REPLACEMENT OF EXISTING RESIDENTIAL CENTER
440 EAST HILL ROAD
WILLITS, CALIFORNIA 95490
MENDOCINO COUNTY
CALIFORNIA CONSERVATION CORP

Supervisor	Designed	Drawn
		Author

DSA Application No.
02-118630

SHEET TITLE
TECHNOLOGY SINGLE LINE DIAGRAM

DGS Project Number	NMR Project Number
0000000000001826	18-6456

Reference North: NORTH
Sheet Scale
Sheet Number: T052

ISSUE DATE
July 9, 2021

Plot Date: 3/22/2021 9:00:47 AM
File Name: BIM 360:/CCC Willits Residential Center/E_CCC Willits_COMMON_2019-0228A.rvt

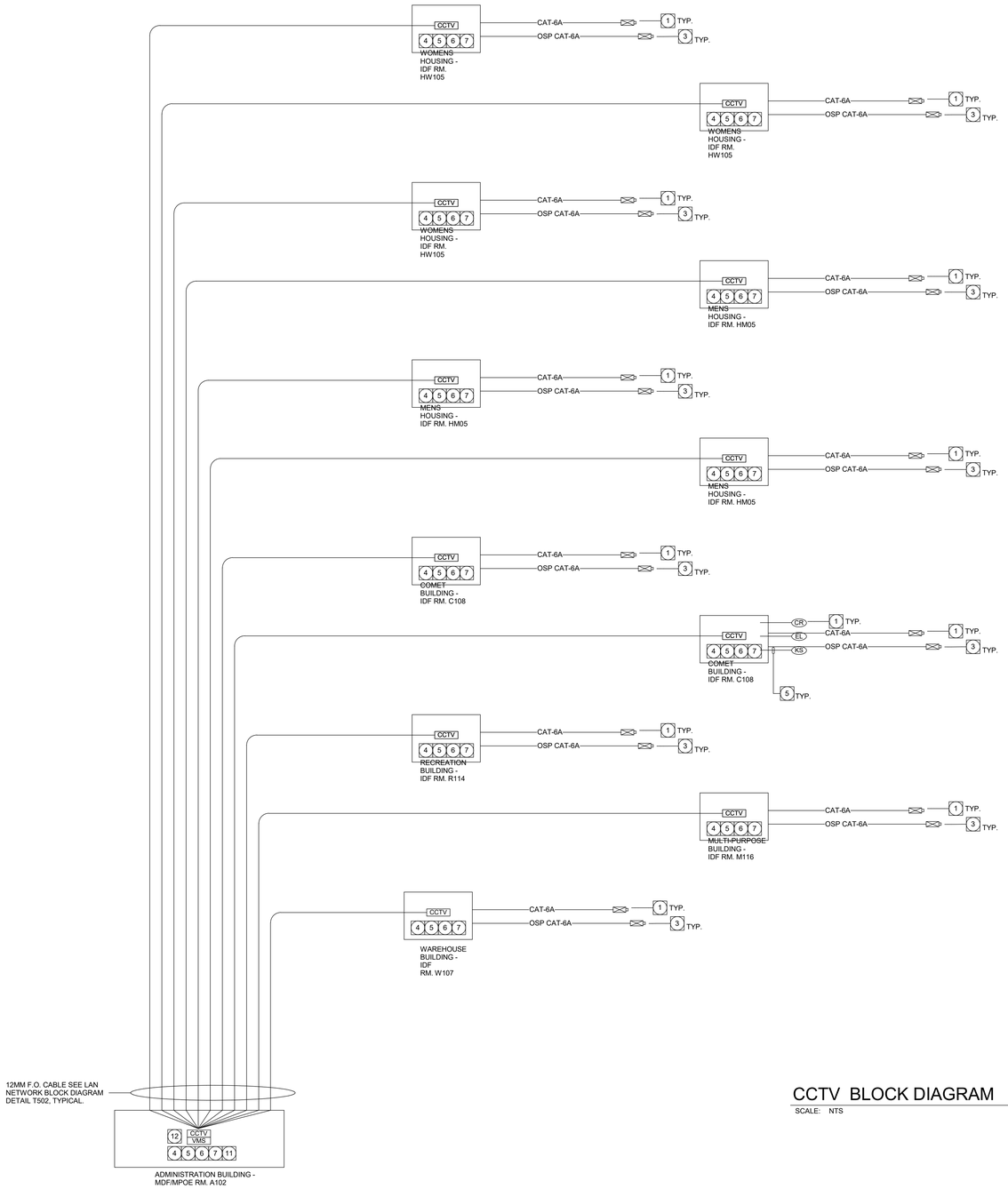

CCTV SYSTEM GENERAL NOTES

1. CONTRACTOR'S SCOPE SHALL INCLUDE ALL MATERIALS, LABOR, AND COMPONENTS REQUIRED FOR A COMPLETE AND FULLY FUNCTIONAL CCTV SURVEILLANCE SYSTEM AS DESCRIBED IN THE PLANS AND SPECIFICATIONS.
2. ALL HORIZONTAL DATA CABLE (CAT-6A) SHALL HOMERUN FROM CAMERA LOCATION TO THE NEAREST MDF/IDF. NO SPLICES WITHIN THE CABLE RUN.
3. FIBER RUNS FROM THE MDF CONNECTING TO THE RESPECTIVE IDF LOCATIONS SHALL BE 12-STRAND OM4 LASER OPTIMIZED MULTIMODE TIGHT BUFFERED INDOOR RISER-RATED CABLE PER THE SCS SPECIFICATIONS, AND PROVIDED AS A COMPONENT OF THE LAN SYSTEM. SPLICES IN FIBER OPTIC CABLE ARE PROHIBITED.
4. REFERENCE VIDEO SURVEILLANCE SYSTEM SPECIFICATIONS FOR ADDITIONAL REQUIREMENTS.

CCTV SYSTEM SCHEMATIC NOTES

1. INTERIOR FIXED IP CAMERA WITH POWER OVER ETHERNET (POE), COMPLETE WITH MOUNT, ENCLOSURE, ETC. FOR A COMPLETE FULLY FUNCTIONING SYSTEM. SEE SPECIFICATIONS.
2. CATEGORY 6A CABLE PER SPECIFICATION TERMINATED ON PATCH PANEL IN NEAREST TELECOM ROOM.
3. EXTERNAL IP CAMERA WITH POWER OVER ETHERNET (POE), COMPLETE WITH MOUNT, ENCLOSURE, ETC. FOR A COMPLETE FULLY FUNCTIONING SYSTEM. PROVIDE POE INJECTOR IN NEAREST IDF ROOM WHERE REQUIRED. SEE SPECIFICATIONS.
4. CATEGORY 6A PATCH PANEL. QUANTITY AS REQUIRED TO TERMINATE ALL CABLES. CCTV CONTRACTOR TO ADHERE TO SAME PRACTICES, STANDARDS, AND GUIDELINES AS STRUCTURED CABLING CONTRACTOR. SEE STRUCTURED CABLING SPECIFICATION FOR MORE INFORMATION.
5. MANAGED ETHERNET POE SWITCH(S) WITH FIBER UPLINK AS PART OF THE LAN SYSTEM.
6. UPS PER SPECIFICATION. UPS TO PROVIDE 30 MINUTES BACKUP POWER FOR ALL CAMERAS, ENCODERS, AND ETHERNET SWITCHES REQUIRED.
7. PROVIDE (1) 1-METER DUPLEX MULTIMODE PATCH CORD AT EACH IDF LOCATION, AND (10) 2-METER DUPLEX MULTIMODE PATCH CORDS AT MDF LOCATION.
8. PROVIDE ETHERNET CABLE EXTENDER DEVICES PER SPECIFICATIONS FOR IP POE CAMERAS THAT ARE FARTHER THAN 295 LINEAR FEET FROM ANY GROUND LEVEL TELECOM ROOM.
9. WALL MOUNTED PTZ POWER SUPPLY AND CABLE PER CAMERA MANUFACTURER'S RECOMMENDATION.
10. DEDICATED CCTV SURVEILLANCE WORKSTATION AND (1) 42-INCH WALL MOUNTED VIDEO MONITOR AND ARTICULATING MOUNT PER SPECIFICATIONS AND PLANS. SEE PLANS FOR QUANTITY AND LOCATIONS PRIOR TO ROUGH-IN. PROVIDE CAT-6 CABLE AND OUTLET FOR WORKSTATION.
11. DEDICATED CCTV SURVEILLANCE WORKSTATION AND (2) 42-INCH WALL MOUNTED VIDEO MONITORS AND ARTICULATING MOUNTS PER SPECIFICATIONS AND PLANS. SEE PLANS FOR QUANTITY AND LOCATIONS PRIOR TO ROUGH-IN. PROVIDE CAT-6 CABLE AND OUTLET FOR WORKSTATION.
12. CCTV SYSTEM NETWORK VIDEO RECORDER, SERVER, MONITOR WITH KEYBOARD, STORAGE ARRAY, UPS, INCLUDING VIDEO MANAGEMENT SOFTWARE (VMS). INSTALL IN MDF RACK. COORDINATE FINAL LOCATION OF EQUIPMENT WITH DISTRICT PRIOR TO ROUGH-IN. PROVIDE ALL PATCH CORDS AND CONNECTIONS AS REQUIRED. SEE CCTV SYSTEM SPECIFICATIONS FOR MORE INFORMATION.

CCTV BLOCK DIAGRAM

SCALE: NTS

1

IDENTIFICATION STAMP
DIV. OF THE STATE ARCHITECT
APP: 02-118630 INC:
REVIEWED FOR
SS ☐ FLS ☐ ACS ☑
DATE: 04/13/2021

OFFICE OF THE STATE FIRE MARSHAL
APPROVED FIRE AND PANIC ONLY
Approval of this plan does not authorize or approve any omission or deviation from applicable regulations. Final approval is subject to field inspection. One set of approved plans shall be available on the project site at all times.
PERMIT NO: 28 N 2332-CP
REVIEWED BY: LEO CATAYLO, OSFM
DATE: 4/1/2021

DGS GENERAL SERVICES
Department of General Services
State of California
Real Estate Services Division
Project Management & Development Branch
707 Third Street, Suite 4-105
West Sacramento, California 95605

NICHOLS MELBURG & ROSSETTO ARCHITECTS + ENGINEERS
300 Knollcrest Drive
Redding, CA. 96002
(530) 222-3300 (530) 222-3538 FAX
http://www.nmrdesign.com

Copyright © 2019
All ideas, designs, arrangements and plans indicated or represented by this drawing are owned by, and the property of, NICHOLS, MELBURG and ROSSETTO and were created, evolved and developed for use on, and in connection with, the specified project. None of the ideas, designs, arrangements or plans shall be used by, or disclosed to any person, firm or corporation for any purpose whatsoever without the written permission of NICHOLS, MELBURG and ROSSETTO.

LICENSE STAMPS

REGISTERED PROFESSIONAL ENGINEER RAYMOND W. SWEET No. E15610 12/31/2021 ELECTRICAL STATE OF CALIFORNIA
Date Signed 3/25/2021

CONSULTANT

tklsc COLLABORATIVE
11870 Pierce Street, Suite 160
Riverside, California 92505
951.299.4160 www.tk1sc.com
Project Leader - Jerry Leonhardt
Electrical Lead - Reid Cordry
tk1sc Job #:2019-0228A

DRAWING STATUS
CONSTRUCTION DOCUMENTS

ISSUE

No.	Date	Description
1	10/20/2020	INITIAL PLAN REVIEW
2	01/22/2021	AGENCY RESUBMITTAL
3	03/22/2021	AGENCY RESUBMITTAL

If drawing is not 30" x 42" it is a reduced print

PROJECT
RESIDENTIAL CENTER, UKIAH: REPLACEMENT OF EXISTING RESIDENTIAL CENTER
440 EAST HILL ROAD
WILLITS, CALIFORNIA 95490
MENDOCINO COUNTY
CALIFORNIA CONSERVATION CORP

Supervisor	Designed	Drawn
		Author

DSA Application No.
02-118630

SHEET TITLE
CCTV SINGLE LINE DIAGRAM

DGS Project Number
0000000000001826
NMR Project Number
18-6456

Reference North
Sheet Scale
Sheet Number
T053

ISSUE DATE
July 9, 2021

Plot Date: 3/22/2021 9:00:48 AM
File Name: BIM 360://CCC-Willits Residential Center/E_CCC Willits_COMMON_2019-0228A.rvt

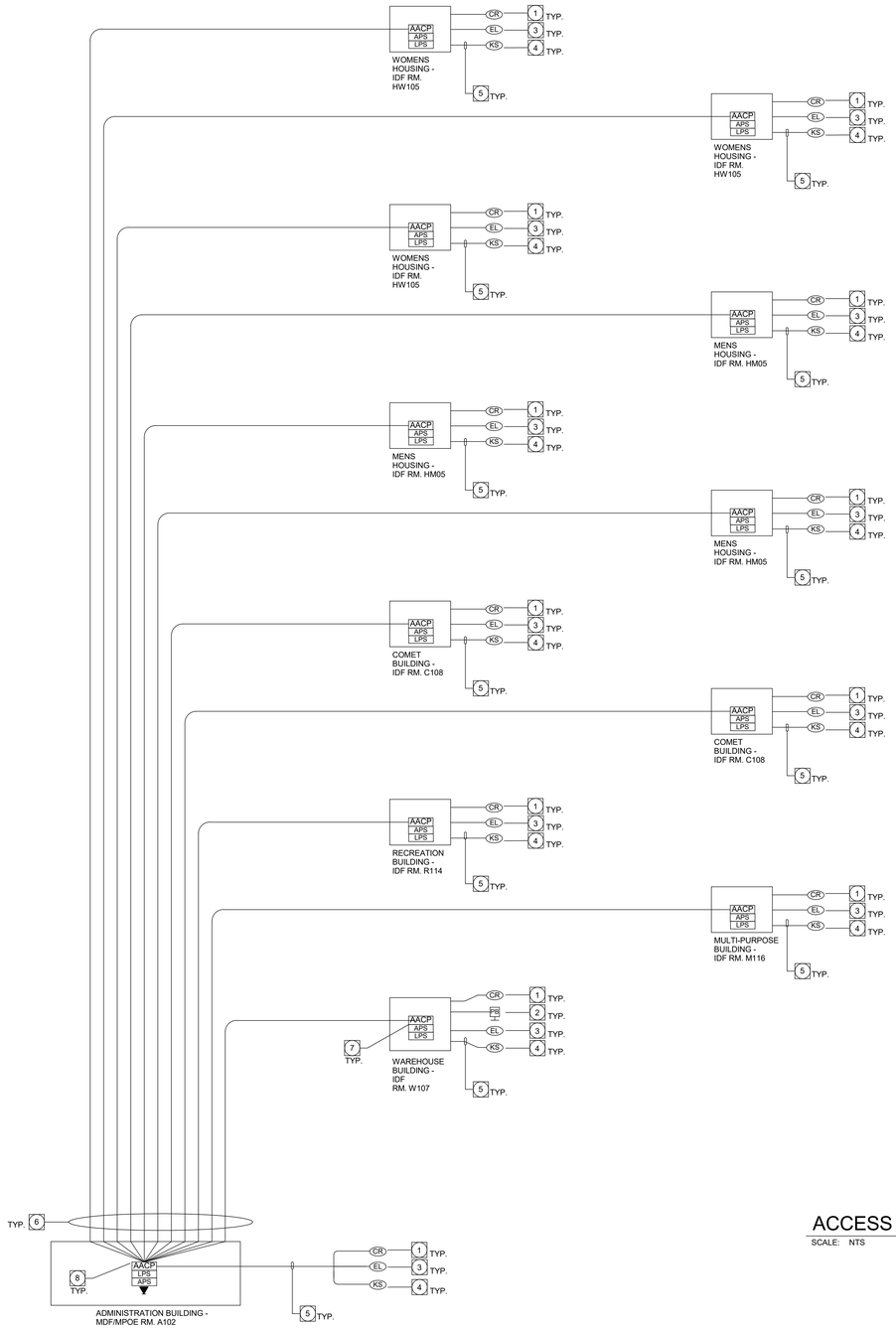

ACCESS CONTROL SYSTEM SPECIFIC NOTES:

1. PROXIMITY CARD READER, QUANTITY AND LOCATIONS PER PLANS AND SPECIFICATIONS.
2. PANIC BUTTON (LOCK-DOWN), QUANTITY AND LOCATIONS PER PLANS AND SPECIFICATIONS. INSTALL ON FIRST FLOOR ONLY.
3. ELECTRONIC LOCK HARDWARE WITH INTEGRATED CARD / FOB READER PER DOOR HARDWARE SPECIFICATIONS. CONTRACTOR TO PROVIDE AND INSTALL COMPLETE.
4. KNOX KEY SWITCH, FOR 1ST RESPONDER ACCESS. QUANTITY AND LOCATIONS PER PLANS AND SPECIFICATIONS.
5. DEVICE CABLING PER MANUFACTURER'S RECOMMENDATIONS.
6. SYSTEM BACKBONE CABLING PER MANUFACTURER'S RECOMMENDATIONS.
7. ACCESS CONTROL SYSTEM DOOR CONTROL PANEL, CONTROLLERS, BATTERY BACKUP AND POWER SUPPLIES, ETC. AS REQUIRED.
8. ACCESS CONTROL SYSTEM SERVER, MANAGEMENT SOFTWARE, ETC FOR A COMPLETE AND FULLY FUNCTIONAL SYSTEM, PER SPECIFICATIONS.

ACCESS CONTROL SYSTEM NOTES:

1. CONTRACTOR SHALL PROVIDE AND INSTALL ALL ACCESS CONTROL HARDWARE, SOFTWARE, SERVER, UPS, CONTROLLERS, DEVICES, CABLING, ELECTRONIC DOOR LOCK HARDWARE, AND ALL OTHER COMPONENTS REQUIRED FOR A COMPLETE AND FULLY FUNCTIONAL SYSTEM.
2. PROGRAM PANIC BUTTON LOCATED AT BLDG. A TO LOCK ALL EXTERIOR DOORS FROM EXTERIOR ENTRY EXCEPT BY BYPASS WITH A PROXIMITY CARD OR KNOX SWITCH.
3. PROGRAM PANIC BUTTON LOCATED AT ADMIN RECEPTION TO LOCK ALL EXTERIOR ENTRY DOORS FROM EXTERIOR ENTRY EXCEPT BY BYPASS WITH A PROXIMITY CARD OR KNOX SWITCH.
4. CONTRACTOR SHALL BE RESPONSIBLE TO COORDINATE ALL PROGRAMMING AND SEQUENCE OF OPERATIONS WITH DISTRICT REPRESENTATIVE AT LEAST 30 DAYS PRIOR TO FINAL SYSTEM TEST.
5. REFERENCE SPECIFICATIONS FOR ADDITIONAL REQUIREMENTS.
6. DRAWINGS AND LAYOUTS ARE PRIMARILY DIAGRAMMATIC IN NATURE. CONTRACTOR IS RESPONSIBLE FOR FINAL FOOTAGES AND EXACT LOCATIONS.

ACCESS CONTROL BLOCK DIAGRAM

SCALE: NTS

1

IDENTIFICATION STAMP
DIV. OF THE STATE ARCHITECT
APP: 02-118630 INC:
REVIEWED FOR
SS ☐ FLS ☐ ACS ☑
DATE: 04/13/2021

OFFICE OF THE STATE FIRE MARSHAL
APPROVED FIRE AND PANIC ONLY
Approval of this plan does not authorize or approve any omission or deviation from applicable regulations. Final approval is subject to field inspection. One set of approved plans shall be available on the project site at all times.
PERMIT NO.: 28 N 2332 CP
REVIEWED BY: LEO CATALLO, OSFM
DATE: 4/ /2021

DGS GENERAL SERVICES
Department of General Services
State of California
Real Estate Services Division
Project Management & Development Branch
707 Third Street, Suite 4-105
West Sacramento, California 95605

NICHOLS MELBURG & ROSSETTO
ARCHITECTS + ENGINEERS
300 Knollcrest Drive
Redding, CA. 96002
(530) 222-3300 (530) 222-3538 FAX
http://www.nmrdesign.com

Copyright © 2019
All ideas, designs, arrangements and plans indicated or represented by this drawing are owned by, and the property of, NICHOLS, MELBURG and ROSSETTO and were created, evolved and developed for use on, and in connection with, the specified project. None of such ideas, designs, arrangements or plans shall be used by, or disclosed to any person, firm or corporation for any purpose whatsoever without the written permission of NICHOLS, MELBURG and ROSSETTO.

LICENSE STAMPS

REGISTERED PROFESSIONAL ENGINEER
RAYMOND W. SWATT
No. E15610
12/31/2021
ELECTRICAL
STATE OF CALIFORNIA
Date Signed: 3/25/2021

CONSULTANT
tk1sc COLLABORATIVE
11870 Pierce Street, Suite 160
Riverside, California 92505
951.299.4160 www.tk1sc.com
Project Leader - Jerry Leonhardt
Electrical Lead - Reid Cordry
tk1sc Job #:2019-0228A

DRAWING STATUS
CONSTRUCTION DOCUMENTS

ISSUE

No.	Date	Description
1	10/20/2020	INITIAL PLAN REVIEW
2	01/22/2021	AGENCY RESUBMITTAL
3	03/22/2021	AGENCY RESUBMITTAL

If drawing is not 30" x 42" it is a reduced print

PROJECT
RESIDENTIAL CENTER, UKIAH: REPLACEMENT OF EXISTING RESIDENTIAL CENTER
440 EAST HILL ROAD
WILLITS, CALIFORNIA 95490
MENDOCINO COUNTY
CALIFORNIA CONSERVATION CORP

Supervisor	Designed	Drawn
		Author

DSA Application No.
02-118630

SHEET TITLE
ACCESS SINGLE LINE DIAGRAM

DGS Project Number	NMR Project Number
000000000001826	18-6456

Reference North: NORTH
Sheet Scale
Sheet Number: T054

ISSUE DATE
July 9, 2021

Plot Date: 3/22/2021 9:00:49 AM
File Name: BIM 360://CCC Willits Residential Center/E_CCC Willits_COMMON_2019-0228A.rvt

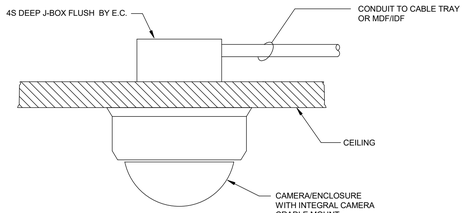

SURFACE MOUNT CEILING CAMERA DETAIL

SCALE: NTS

3

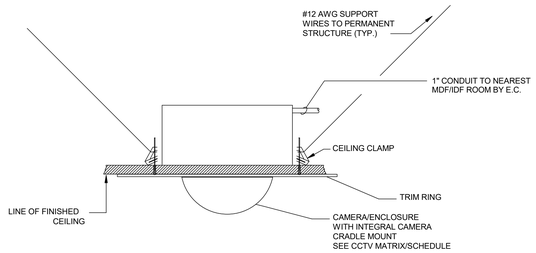

INTERIOR CAMERA DETAIL - CEILING MOUNTED

SCALE: NTS

1

MOUNTING DETAIL GENERAL NOTES:

1. THE MOUNTING DETAILS ON THIS PAGE ARE DIAGRAMMATIC AND ARE ONLY INTENDED TO CONVEY THE GENERAL SCOPE INVOLVED IN MOUNTING A CAMERA.
2. CONTRACTOR SHALL BE RESPONSIBLE TO PROVIDE AND INSTALL ALL FASTENERS, BRACKETS, ATTACHMENTS, ETC. PER MANUFACTURER'S REQUIREMENTS.
3. PROVIDE ALL CUTTING AND PATCHING OF SURROUNDING SURFACES AS REQUIRED FOR PROPER INSTALLATION. PATCHING SHALL BE OF THE SAME MATERIALS, WORKMANSHIP, AND FINISH, AND ACCURATELY MATCH THE SURROUNDING WORK TO THE SATISFACTION OF THE DISTRICT.
4. CUTTING OF STRUCTURAL MEMBERS SHALL NOT BE DONE WITHOUT NOTIFYING AND OBTAINING ARCHITECT APPROVAL.
5. ALL METALLIC CONDUIT (EMT), SUPPORTS, BOLTS, STRAPS, AND FASTENERS INSTALLED ON EXTERIOR OF ANY STRUCTURE SHALL BE CORROSION-RESISTANT. CONNECTORS AND COUPLERS SHALL BE RAIN TIGHT COMPRESSION FITTINGS.
6. CONTRACTOR SHALL PROVIDE 30-YEAR WEATHERPROOF SEALANT (CLEAR) BETWEEN ALL CAMERA ENCLOSURES AND BUILDING STRUCTURES, AND AT CONDUIT PENETRATIONS THROUGH STRUCTURE EXTERIORS. PROVIDE A CONTINUOUS BEAD OF SEALANT COMPLETELY AROUND THE EDGE OF THE CAMERA ENCLOSURE AND THE STRUCTURE.

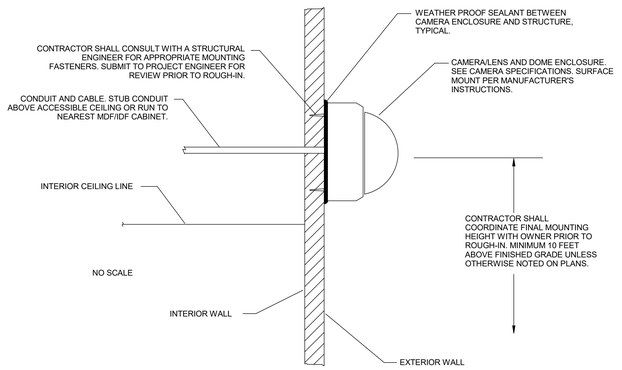

EXTERIOR CAMERA DETAIL- SURFACE WALL MOUNT

NO SCALE

2

IDENTIFICATION STAMP
DIV. OF THE STATE ARCHITECT
APP: 02-118630 INC:
REVIEWED FOR
SS ☐ FLS ☐ ACS ☑
DATE: 04/13/2021

OFFICE OF THE STATE FIRE MARSHAL
APPROVED FIRE AND PANIC ONLY
Approval of this plan does not authorize or approve any omission or deviation from applicable regulations. Final approval is subject to field inspection. One set of approved plans shall be available on the project site at all times.
PERMIT NO: 20 N 2332-CP
REVIEWED BY: LEO CATAYLO, OSFM
DATE: 4/ 1 /2021

GENERAL SERVICES
Department of General Services
State of California
Real Estate Services Division
Project Management & Development Branch
707 Third Street, Suite 4-105
West Sacramento, California 95605

NICHOLS MELBURG & ROSSETTO
ARCHITECTS + ENGINEERS
300 Knollcrest Drive
Redding, CA. 96002
(530) 222-3300 (530) 222-3538 FAX
http://www.nmrdesign.com

Copyright © 2019
All ideas, designs, arrangements and plans indicated or represented by this drawing are owned by, and the property of, NICHOLS, MELBURG and ROSSETTO and were created, evolved and developed for use on, and in connection with, the specified project. None of such ideas, designs, arrangements or plans shall be used by, or disclosed to any person, firm or corporation for any purpose whatsoever without the written permission of NICHOLS, MELBURG and ROSSETTO.

LICENSE STAMPS

REGISTERED PROFESSIONAL ENGINEER
RAYMOND W. SWEETEN
No. E15610
12/31/2021
CIVIL
STATE OF CALIFORNIA
Date Signed: 3/25/2021

CONSULTANT

tklsc
COLLABORATIVE
11870 Pierce Street, Suite 160
Riverside, California 92505
951.299.4160 www.tk1sc.com
Project Leader - Jerry Leonhardt
Electrical Lead - Reid Cordry
tk1sc Job #:2019-0228A

DRAWING STATUS
CONSTRUCTION DOCUMENTS

ISSUE

No.	Date	Description
1	10/20/2020	INITIAL PLAN REVIEW
2	01/22/2021	AGENCY RESUBMITTAL
3	03/22/2021	AGENCY RESUBMITTAL

If drawing is not 30" x 42" it is a reduced print

PROJECT
RESIDENTIAL CENTER, UKIAH: REPLACEMENT OF EXISTING RESIDENTIAL CENTER
440 EAST HILL ROAD
WILLITS, CALIFORNIA 95490
MENDOCINO COUNTY
CALIFORNIA CONSERVATION CORP

Supervisor	Designed	Drawn
		Author

DSA Application No.
02-118630

SHEET TITLE
SECURITY CAMERA DETAILS

DGS Project Number: 0000000000001826
NMR Project Number: 18-6456

Reference North: NORTH
Sheet Scale:
Sheet Number: T055

ISSUE DATE
July 9, 2021

Plot Date: 3/22/2021 9:00:51 AM
File Name: BIM 360:/CCC Willits Residential Center/E_CCC Willits_COMMON_2019-0228A.rvt

EQUIPMENT LIST:
1 - DOOR CONTACT

NOTE:
THIS DETAIL IS TYPICAL AT ALL ROOF HATCHES. SEE PLANS FOR QUANTITY AND LOCATION.

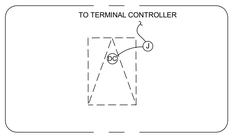

ROOF HATCH PLAN 1A

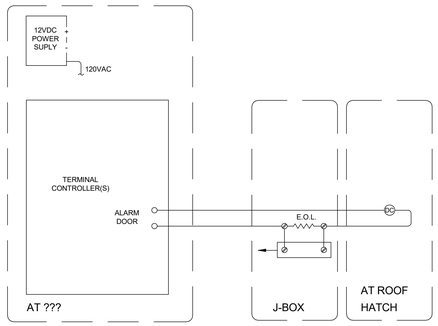

ROOF HATCH SCHEMATIC 3

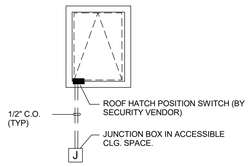

ROOF HATCH
SCALE: NTS
3

EQUIPMENT LIST:
1 - DOOR CONTACT
1 - PROXIMITY / CARD READER
1 - ELECTRIC LOCK OR ELECTRIC STRIKE(CONNECTION ONLY)
1 - REQUEST-TO-EXIT SENSOR (CONNECTION ONLY IF INTEGRAL TO DOOR HARDWARE)

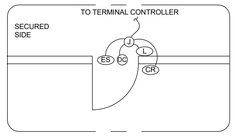

DOOR PLAN 2C

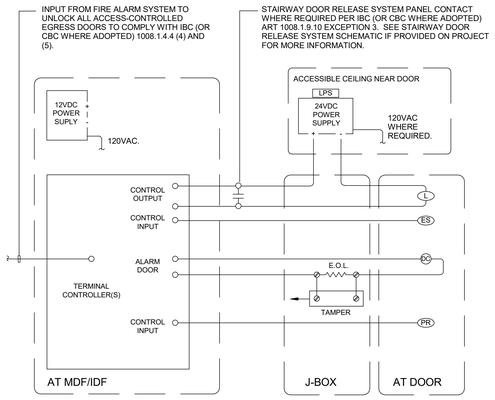

DOOR SCHEMATIC 2

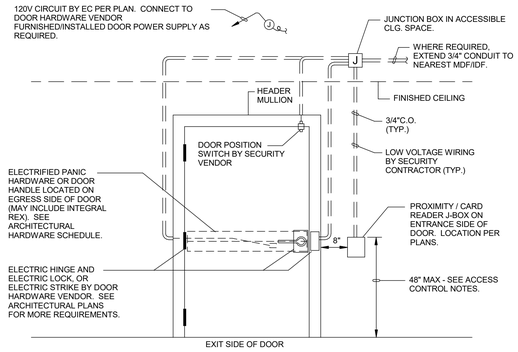

SINGLE DOOR WITH CONTACT, CARD READER, ELECTRIC LOCK & REX
SCALE: NTS
2

EQUIPMENT LIST:
2 - DOOR CONTACTS
1 - ELECTRIC LOCK (CONNECTION ONLY)
2 - REQUEST-TO-EXIT SENSOR (CONNECTION ONLY IF INTEGRAL TO DOOR HARDWARE)
1 - PROXIMITY CARD READER

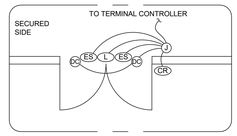

DOOR PLAN 3C

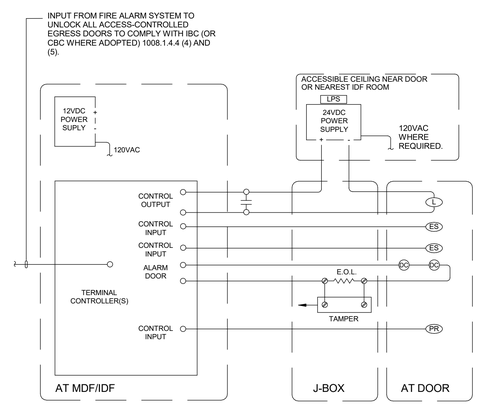

DOOR SCHEMATIC 1

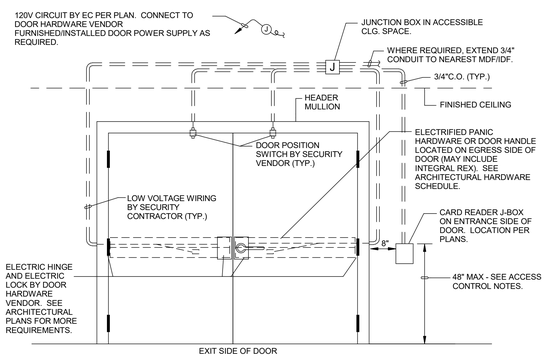

DOUBLE DOOR WITH CONTACT, CARD READER, ELECTRIC LOCK & REX
SCALE: NTS
1

ACCESS CONTROL NOTES:

1. ALL ACCESS CONTROL DOORS SHALL BE OPERABLE FROM THE INSIDE WITHOUT USING SPECIAL EFFORT OR KNOWLEDGE.
2. IF DOOR IS PART OF A STAIRWELL SYSTEM, REFER TO STAIRWAY DOOR RELEASING SYSTEM DETAIL FOR ADDITIONAL REQUIREMENTS.
3. DOORS WITH OPPOSITE HAND SWINGS ARE MIRRORED VERSION OF THE DETAILS SHOWN ON THIS SHEET. SEE ARCHITECTURAL PLANS FOR CORRECT DOOR SWING AND CARD READER LOCATIONS.
4. ALL CONDUITS AND JUNCTION BOXES ARE SHOWN CONCEALED. SOME INSTALLATIONS MAY REQUIRE ROUTING CONDUITS UNDERGROUND AND/OR WITHIN TILT-UP CONCRETE PANELS, ETC. COORDINATE INSTALLATION WITH ALL OTHER TRADES AS REQUIRED.
5. CONTRACTOR SHALL COMPLY WITH ALL REQUIREMENTS AS OUTLINED IN IBC/CBC 1008.1.9.8 FOR ALL ACCESS CONTROL DOORS AS REQUIRED.
6. CONTRACTOR SHALL COMPLY WITH ALL REQUIREMENTS AS OUTLINED IN IBC/CBC 1008.1.9.11 FOR INTERIOR STAIRWAY EGRESS DOORS AS REQUIRED.
7. ALL DEVICE HEIGHTS DEPICTED SHALL BE MODIFIED AS REQUIRED BY GOVERNING BUILDING CODES. CONTRACTOR TO VERIFY/RECONCILE APPLICABLE CODE REQUIREMENTS AND ANY DEVICE HEIGHT REQUIREMENTS DEPICTED ON ARCHITECTURAL OR INTERIOR DESIGN PLANS & SPECIFICATIONS PRIOR TO DEVICE ROUGH-IN. CONFLICTS OR LACK OF MOUNTING HEIGHT SPECIFICITY ON THE ARCHITECTURAL OR INTERIOR DESIGN PLANS & SPECIFICATIONS SHALL BE CAUSE FOR THE CONTRACTOR TO ISSUE A FORMAL WRITTEN RFI FOR RESOLUTION. DEVICE MOUNTING HEIGHT CLARIFICATIONS/SPECIFICATIONS SHALL NOT RESULT IN AN ADDITIONAL COST TO THE OWNER - CONTRACTOR SHALL INCLUDE ALL COSTS IN BASE BID.
8. CONTRACTOR ROUTE CONDUITS/ CONDUIT SLEEVES TO ACCESSIBLE CEILINGS SUCH THAT ACCESS CONTROL CABLING CAN BE ROUTED TOWARDS ACCESS CONTROL HARDWARE LOCATION. PROVIDE ANY ADDITIONAL SLEEVES/ CONDUIT/ FIRE RATED PENETRATIONS AS REQUIRED SUCH THAT ACCESS CONTROL CABLING PATHWAYS ARE NOT BLOCKED BY WALLS, CEILINGS OR OTHER OBSTRUCTIONS COORDINATE WITH ACCESS CONTRACTOR PRIOR TO ROUGH-IN.

Plot Date: 3/22/2021 9:00:52 AM
File Name: BIM 360://CCC Willits Residential Center/E_CCC Willits_COMMON_2019-0228A.rvt

IDENTIFICATION STAMP
DIV. OF THE STATE ARCHITECT
APP: 02-118630 INC:
REVIEWED FOR
SS ☐ FLS ☐ ACS ☑
DATE: 04/13/2021

OFFICE OF THE STATE FIRE MARSHAL
APPROVED FIRE AND PANIC ONLY
Approval of this plan does not authorize or approve any omission or deviation from applicable regulations. Final approval is subject to field inspection. One set of approved plans shall be available on the project site at all times.
PERMIT NO: 28 N 2332-CP
REVIEWED BY: LEO CATAYLO, OSFM
DATE: 4/1/2021

GENERAL SERVICES
Department of General Services
State of California
Real Estate Services Division
Project Management & Development Branch
707 Third Street, Suite 4-105
West Sacramento, California 95605

NICHOLS MELBURG & ROSSETTO
ARCHITECTS + ENGINEERS
300 Knollcrest Drive
Redding, CA. 96002
(530) 222-3300 (530) 222-3538 FAX
http://www.nmrdesign.com

Copyright © 2019
All ideas, designs, arrangements and plans indicated or represented by this drawing are owned by, and the property of, NICHOLS, MELBURG and ROSSETTO and were created, evolved and developed for use on, and in connection with, the specified project. None of such ideas, designs, arrangements or plans shall be used by or disclosed to any person, firm or corporation for any purpose whatsoever without the written permission of NICHOLS, MELBURG and ROSSETTO.

LICENSE STAMPS

REGISTERED PROFESSIONAL ENGINEER RAYMOND W. SWEET No. E15610 12/31/2021 STATE OF CALIFORNIA CIVIL
Date Signed: 3/25/2021

CONSULTANT
tk1sc COLLABORATIVE
11870 Pierce Street, Suite 160
Riverside, California 92505
951.299.4160 www.tk1sc.com
Project Leader - Jerry Leonhardt
Electrical Lead - Reid Cordry
tk1sc Job #:2019-0228A

DRAWING STATUS
CONSTRUCTION DOCUMENTS

ISSUE

No.	Date	Description
1	10/20/2020	INITIAL PLAN REVIEW
2	01/22/2021	AGENCY RESUBMITTAL
3	03/22/2021	AGENCY RESUBMITTAL

If drawing is not 30" x 42" it is a reduced print

PROJECT
RESIDENTIAL CENTER, UKIAH: REPLACEMENT OF EXISTING RESIDENTIAL CENTER
440 EAST HILL ROAD
WILLITS, CALIFORNIA 95490
MENDOCINO COUNTY
CALIFORNIA CONSERVATION CORP

Supervisor	Designed	Drawn
		Author

DSA Application No.
02-118630

SHEET TITLE
SECURITY DOOR HARDWARE DETAILS

DGS Project Number: 0000000000001826
NMR Project Number: 18-6456

Reference North: NORTH
Sheet Scale:
Sheet Number: T056

ISSUE DATE
July 9, 2021

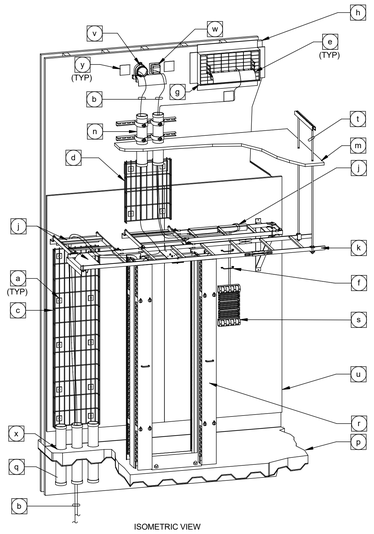

ISOMETRIC VIEW

CABLE ROUTING DETAIL GENERAL NOTES:

1. THIS DETAIL IS GENERIC IN NATURE AND IS INTENDED TO DEPICT A VARIETY OF CABLE TRANSITION SCENARIOS-NOT ALL OF WHICH APPLY TO A GIVEN PROJECT. IT IS THE SCS CONTRACTORS RESPONSIBILITY TO EXAMINE ALL PROJECT PLANS AND PROVIDE CABLE TRANSITIONS APPROPRIATE TO THE SITUATION, UTILIZING PORTIONS OF THIS DETAIL AS APPLICABLE, THAT RESULT IN NEAT WORKMANSHIP AND COMPLY WITH ANSI/EIA/TIA STANDARDS.
2. LADDER RUNWAY AND RACKS/CABINETS ARE SHOWN FOR REFERENCE ONLY.
3. SCS CONTRACTOR TO COORDINATE CABLE/ LADDER RUNWAY TRANSITIONS WITH E.C. PRIOR TO ROUGH-IN.
4. SCS CONTRACTOR TO PROVIDE CABLE SUPPORT ABOVE FLOOR AND BELOW FLOOR TO PREVENT CABLE MOVEMENT, TAKING CARE NOT TO STRESS CABLE JACKETS.
5. ALL ITEMS BY SCS CONTRACTOR UNLESS OTHERWISE NOTED.

CABLE ROUTING DETAIL NOTES:

a. 1/4" STANDOFF MOUNTING TO ALLOW VELCRO TO PASS BEHIND FLEXTRAY.

b. STATION/RISER CABLES.

c. 7" X 2" DEEP FLEXIBLE CABLE TRAY, OR OPTIONAL LADDER RUNWAY. WIDTH TO SPAN CONDUITS OR CONDUIT/GUTTER SYSTEM. HEIGHT TO BE FROM CONDUITS TO BOTTOM OF LADDER TRAY. FASTEN CABLE TO FLEXIBLE CABLE TRAY WITH VELCRO TIES.

d. FLEXIBLE CABLE TRAY NOT REQUIRED IF VERTICAL SPAN IS LESS THAN 24". FOR ROOMS WITH NO ACOUSTICAL CEILING EXTEND FLEXIBLE CABLE TRAY FROM LADDER TRAY TO 6" BELOW INCOMING CONDUITS OR FIREWALL PENETRATION.

e. CABLE SPILLWAY/WATERFALL. TYPICAL AT ALL CONDUITS, INCOMING CABLE TRAY AND FIREWALL PENETRATIONS.

f. D-RINGS AS REQUIRED. ALL CABLE ON WALL FIELD SHALL BE ROUTED AT RIGHT ANGLES AND PROPERLY SUPPORTED.

g. THROUGH PENETRATION FIRESTOP SYSTEM. FILL IN AND AROUND RUNWAY, TRAY AND CABLES WITH INTUMESCENT FIRESTOP PILLOWS.

h. WALL OF IDF, MDF, OR BDF.

j. CABLE DROPOUTS SHALL BE USED AT ALL PLACES WHERE CABLES LEAVE LADDER TRAY.

k. LADDER RUNWAY SHOWN FOR REFERENCE ONLY. SEE LADDER RUNWAY SYSTEM DETAIL THIS SHEET FOR MORE INFORMATION.

m. ACCESSIBLE CEILING WHEN SHOWN ON PLANS. TILES/DRYWALL SHALL BE CUT NEAT AND CLEAN FOR PROFESSIONAL APPEARANCE.

n. 4" CONDUIT WITH BUSHINGS WITH DESIGN-BUILD SUPPORT TO MEET ALL CODES. QUANTITY AS REQUIRED. PROVIDE 1 VACANT SPARE.

p. STRUCTURAL FLOOR/CEILING.

q. (?) IMC C.O. WITH BUSHINGS AND PULL STRING - QUANTITY AND SIZE PER PLANS. FIRESEAL INSIDE OF ALL CONDUITS TO MEET LOCAL, STATE, AND NATIONAL FIRE CODES.

r. DATA EQUIPMENT RACK AND VERTICAL WIRE MANAGEMENT SHOW FOR REFERENCE ONLY.

s. 110-BLOCKS, 66M BLOCKS AND WIRE TROUGHS AS REQUIRED PER SPECIFICATIONS AND DRAWINGS.

t. DESIGN/BUILD STRUCTURAL CEILING SUPPORT. SEE LADDER RUNWAY DETAIL THIS SHEET FOR MORE INFORMATION.

u. PLYWOOD BACKBOARD BY E.C. SEE BACKBOARD DETAIL 6 THIS SHEET FOR ADDITIONAL INFORMATION.

v. FIREWALL PENETRATION SLEEVE(S) WITH BUSHINGS. SIZE AND QUANTITY PER PLANS. SCS CONTRACTOR TO FIRESEAL INSIDE OF SLEEVE AFTER CABLE INSTALLATION.

w. RE-ENTERABLE FIREWALL PENETRATION (STI EZ-PATH #EZDP33FWS). QUANTITY AS REQUIRED. MAY BE USED IN-LIEU-OF OR IN ADDITION TO CONVENTIONAL FIREWALL PENETRATION SLEEVES. NOT ACCEPTABLE IN ROOMS WITH GASEOUS FIRE SUPPRESSION SYSTEMS.

x. UL FIRESTOP AROUND EXTERIOR OF CONDUIT PENETRATION AS REQUIRED BY E.C. (TYP).

y. FIRESTOP LABEL PER CODE.

CABLE ROUTING DETAIL

SCALE: NTS

5

1. 4S DEEP NEMA JUNCTION BOX WITH RECEPTACLES PER PLAN ATTACHED SECURELY TO LADDER RUNWAY. VERIFY CORRECT SIDE OF LADDER RUNWAY/EXACT MOUNTING LOCATION ON LADDER RUNWAY WITH OWNER AND SCS CONTRACTOR PRIOR TO ROUGH-IN. E.C. TO INSTALL JUNCTION BOX ON SIDE OF LADDER RUNWAY ONLY WITH RECEPTACLE PERPENDICULAR TO FLOOR. JUNCTION BOX SHALL NOT BE INSTALLED ON TOP OR BOTTOM OF LADDER RUNWAY.
2. PERMANENT LABELS INDICATING PANEL ID, CIRCUIT NUMBER(S) AND NEMA/IEC RECEPTACLE TYPE. PROVIDE LABELS ON FACE OF BOX.
3. CONDUIT AND BRANCH CIRCUIT PER PLAN. ROUTE CONDUITS TO PANEL(S) ABOVE ACCESSIBLE CEILING-IF PROVIDED ON PROJECT . IN NO CASE, SHALL CONDUITS BE ROUTED THROUGH/WITHIN LADDER RUNWAY VERTICAL WIRE MANAGERS OR OTHERWISE OBSTRUCT USE OF RACKS BY COMMUNICATIONS EQUIPMENT OR CABLING.
4. OVERHEAD LADDER RUNWAY SYSTEM SHOWN HERE FOR REFERENCE ONLY.
5. SUSPEND LADDER RUNWAY ABOVE RACKS/CABINETS PER PLANS. SEE LADDER RUNWAY SYSTEM DETAIL 1 THIS SHEET FOR ADDITIONAL INFORMATION.
6. EQUIPMENT RACK AND VERTICAL WIRE MANAGER BY SCS CONTRACTOR. EXACT EQUIPMENT CONFIGURATION MAY VARY.
7. JUNCTION BOX SHALL NOT OBSTRUCT VERTICAL WIRE MANAGERS OR EQUIPMENT RACK MOUNTING PLATES.

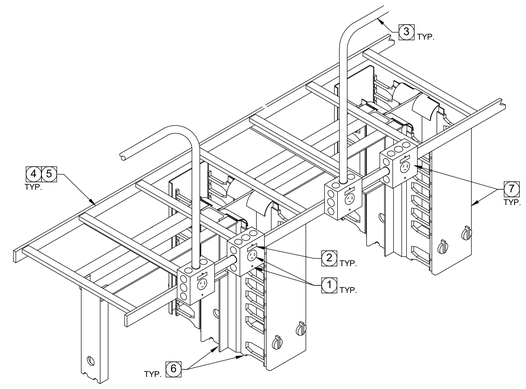

MDF/IDF ROOM LADDER TRAY RECEPTACLE MOUNTING DETAIL

SCALE: NTS

1

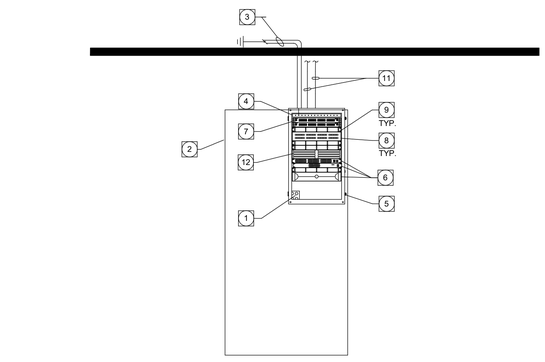

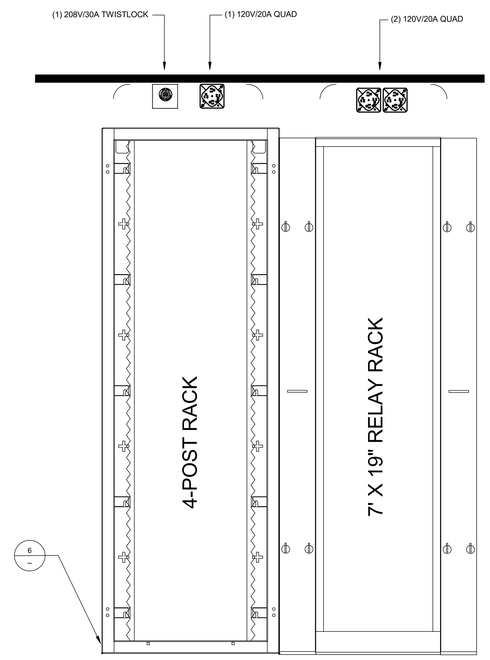

IDF WALL MOUNTED CABINET NOTES:

1. E.C. TO MOUNT 20 AMP DEDICATED CIRCUIT QUAD OUTLET ON THE INSIDE BACK WALL OF CABINET. COORDINATE LOCATION WITH SCS CONTRACTOR.
2. PAINTED A/C GRADE BACKBOARD BY E.C.. SEE PLANS FOR MORE INFORMATION.
3. E.C. PROVIDED 1/2"C. WITH #6-AWG GREEN GROUND CONDUCTOR EXOTHERMICALLY CONNECTED TO NEAREST BUILDING STEEL. CONNECT TO RACK MOUNTED BUS BAR WITH 2-HOLE COMPRESSION LUG.
4. SCS CONTRACTOR TO INSTALL 19" RACK MOUNTED COPPER BUSBAR (GREAT LAKES #CBB-19 OR EQUAL). MOUNT TO REAR RAILS AT TOP.
5. SCS CONTRACTOR TO INSTALL BLACK 36" WALL MOUNTED CABINET (CHATSWORTH #12419-736 OR EQUAL). SCS CONTRACTOR TO MOUNT CABINET TO E.C. INSTALLED PLYWOOD. PROVIDE EXTERIOR MOUNTED FAN KIT AND FILTER KIT (CHATSWORTH #12804-701 AND 40973-001).
6. SERVER/NETWORK EQUIPMENT BY OWNER.
7. FIBER OPTIC ENCLOSURE PER SPECIFICATION. SCS CONTRACTOR TO TERMINATE OSP BACKBONE FIBER AS SPECIFIED. SEE SIGNAL SITE PLAN AND TECHNOLOGY SINGLE LINE DIAGRAM FOR MORE INFORMATION
8. PATCH PANEL AS REQUIRED PER SPECIFICATION. SCS CONTRACTOR SHALL PROVIDE QUANTITY OF PATCH PANELS AND JACKS NECESSARY TO TERMINATE ALL DATA CABLES. PROVIDE (1) ADDITIONAL SPARE PATCH PANEL.
9. 1U HORIZONTAL WIRE MANAGEMENT. SCS CONTRACTOR TO INSTALL (1) WIRE MANAGER ABOVE AND BELOW EACH PATCH PANEL AND (1) BELOW EACH OWNER SUPPLIED DATA SWITCH.
10. NOT USED
11. SECURE AND NEATLY DRESS ALL HORIZONTAL, RISER AND BACKBONE CABLES TO BACKBOARD UTILIZING VELCOR AND D-RINGS. TYE-WRAPS ARE PROHIBITED. CABLES SHALL ENTER CABINET VIA TOP KNOCKOUTS WITH RUBBER GROMMETS.
12. RACK MOUNTED 110 BLOCKS AS REQUIRED IF WALL SPACE IS RESTRICTED. SEE RISER DIAGRAM.

TYPICAL IDF WALL MOUNT CABINET ELEVATION

9

MDF RACK / CABINET - ELEVATION

SCALE: N.T.S.

8

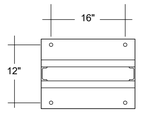

TOP VIEW

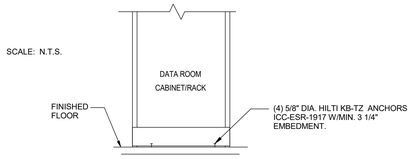

SCALE: N.T.S.

FRONT VIEW

NOTE: MAXIMUM EQUIPMENT WEIGHT - 900lbs

DATA CABINET/RACK FLOOR-MOUNT DETAIL

6

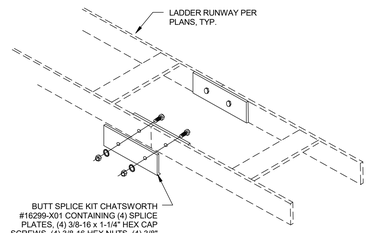

BUTT SPLICE DETAIL

SCALE: N.T.S.

7

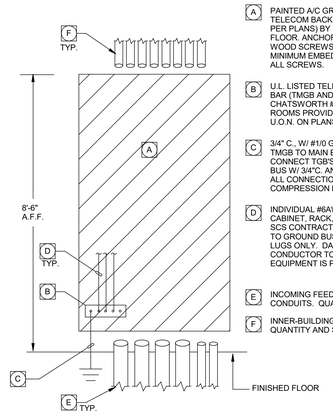

A. PAINTED A/C GRADE FIRE RATED PLYWOOD TELECOM BACKBOARD, (8' HIGH x 5/8" THICK x WIDTH PER PLANS) BY E.C. MOUNT 6" ABOVE FINISHED FLOOR. ANCHOR AT WALL WITH #14 TRUSS HEAD WOOD SCREWS AT 16" ON CENTER. EDGE AND FIELD MINIMUM EMBEDMENT 1-1/2" INTO STUDS. RECESS ALL SCREWS.

B. U.L. LISTED TELECOMMUNICATIONS GROUND BUS BAR (TMGB AND TGB). IN IDF ROOMS PROVIDE TGB, CHATSWORTH #13622-012. IN MDF AND COMPUTER ROOMS PROVIDE TMGB CHATSWORTH #40153-020, U.O.N. ON PLANS.

C. 3/4" C., W/ #1/0 GROUND CONDUCTOR. CONNECT TMGB TO MAIN ELECTRICAL SERVICE GROUND. CONNECT TGB'S TO ELECTRICAL PANEL GROUND BUS W/ 3/4"C. AND #6AWG GROUND CONDUCTOR. ALL CONNECTIONS SHALL BE WITH 2-HOLE COMPRESSION LUGS.

D. INDIVIDUAL #6AWG GROUND CONDUCTORS TO EACH CABINET, RACK, LADDER TRAY, CONDUIT, ETC. BY SCS CONTRACTOR. CONNECT TO EQUIPMENT AND TO GROUND BUS BAR VIA 2-HOLE COMPRESSION LUGS ONLY. DAISY-CHAINING OF GROUND CONDUCTOR TO MORE THAN ONE PIECE OF EQUIPMENT IS PROHIBITED.

E. INCOMING FEED CONDUITS AND INNER-BUILDING CONDUITS. QUANTITY AND SIZE PER PLANS.

F. INNER-BUILDING CONDUITS AND SLEEVES. QUANTITY AND SIZE PER PLANS.

BACKBOARD AND GROUND BUS BAR

SCALE: N.T.S.

2

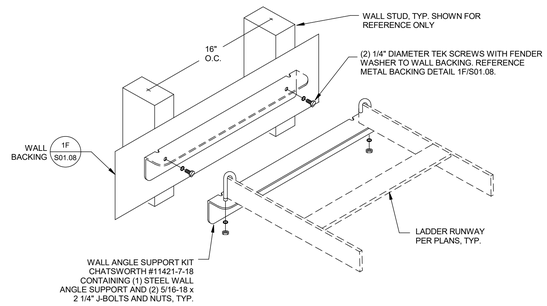

WALL ANGLE SUPPORT DETAIL

SCALE: N.T.S.

3

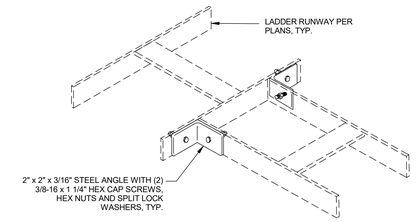

JUNCTION SPLICE DETAIL

SCALE: N.T.S.

4

IDENTIFICATION STAMP
DIV. OF THE STATE ARCHITECT
APP: 02-118630 INC:
REVIEWED FOR
SS ☐ FLS ☐ ACS ☑
DATE: 04/13/2021

OFFICE OF THE STATE FIRE MARSHAL
APPROVED FIRE AND PANIC ONLY
Approval of this plan does not authorize or approve any omission or deviation from applicable regulations. Final approval is subject to field inspection. One set of approved plans shall be available on the project site at all times.
PERMIT NO: 20 N 2332-CP
REVIEWED BY: LEO CATALYLO, OSFM
DATE: 4 / /2021

DGS GENERAL SERVICES
Department of General Services
State of California
Real Estate Services Division
Project Management & Development Branch
707 Third Street, Suite 4-105
West Sacramento, California 95605

NICHOLS MELBURG & ROSSETTO ARCHITECTS + ENGINEERS
300 Knollcrest Drive
Redding, CA. 96002
(530) 222-3300 (530) 222-3538 FAX
http://www.nmrdesign.com

Copyright © 2019
All ideas, designs, arrangements and plans indicated or represented by this drawing are owned by, and the property of, NICHOLS, MELBURG and ROSSETTO and were created, evolved and developed for use on, and in connection with, the specified project. None of such ideas, designs, arrangements or plans shall be used by, or disclosed to any person, firm or corporation for any purpose whatsoever without the written permission of NICHOLS, MELBURG and ROSSETTO.

LICENSE STAMPS

REGISTERED PROFESSIONAL ENGINEER RAYMOND W. SWEETEN No. E15610 12/31/2021 STATE OF CALIFORNIA
Date Signed: 3/25/2021

CONSULTANT
tklsc COLLABORATIVE
11870 Pierce Street, Suite 160
Riverside, California 92505
951.299.4160 www.tk1sc.com
Project Leader - Jerry Leonhardt
Electrical Lead - Reid Cordry
tk1sc Job #:2019-0228A

DRAWING STATUS
CONSTRUCTION DOCUMENTS

ISSUE

No.	Date	Description
1	10/20/2020	INITIAL PLAN REVIEW
2	01/22/2021	AGENCY RESUBMITTAL
3	03/22/2021	AGENCY RESUBMITTAL

If drawing is not 30" x 42" it is a reduced print

PROJECT
RESIDENTIAL CENTER, UKIAH: REPLACEMENT OF EXISTING RESIDENTIAL CENTER
440 EAST HILL ROAD
WILLITS, CALIFORNIA 95490
MENDOCINO COUNTY
CALIFORNIA CONSERVATION CORP

Supervisor	Designed	Drawn
		Author

DSA Application No.
02-118630

SHEET TITLE
LV DETAILS

DGS Project Number: 0000000000001826
NMR Project Number: 18-6456

Reference North: NORTH
Sheet Scale:
Sheet Number: T057

ISSUE DATE
July 9, 2021

Plot Date: 3/22/2021 9:00:53 AM
File Name: BIM 360:/CCC Willits Residential Center/E_CCC Willits_COMMON_2019-0228A.rvt

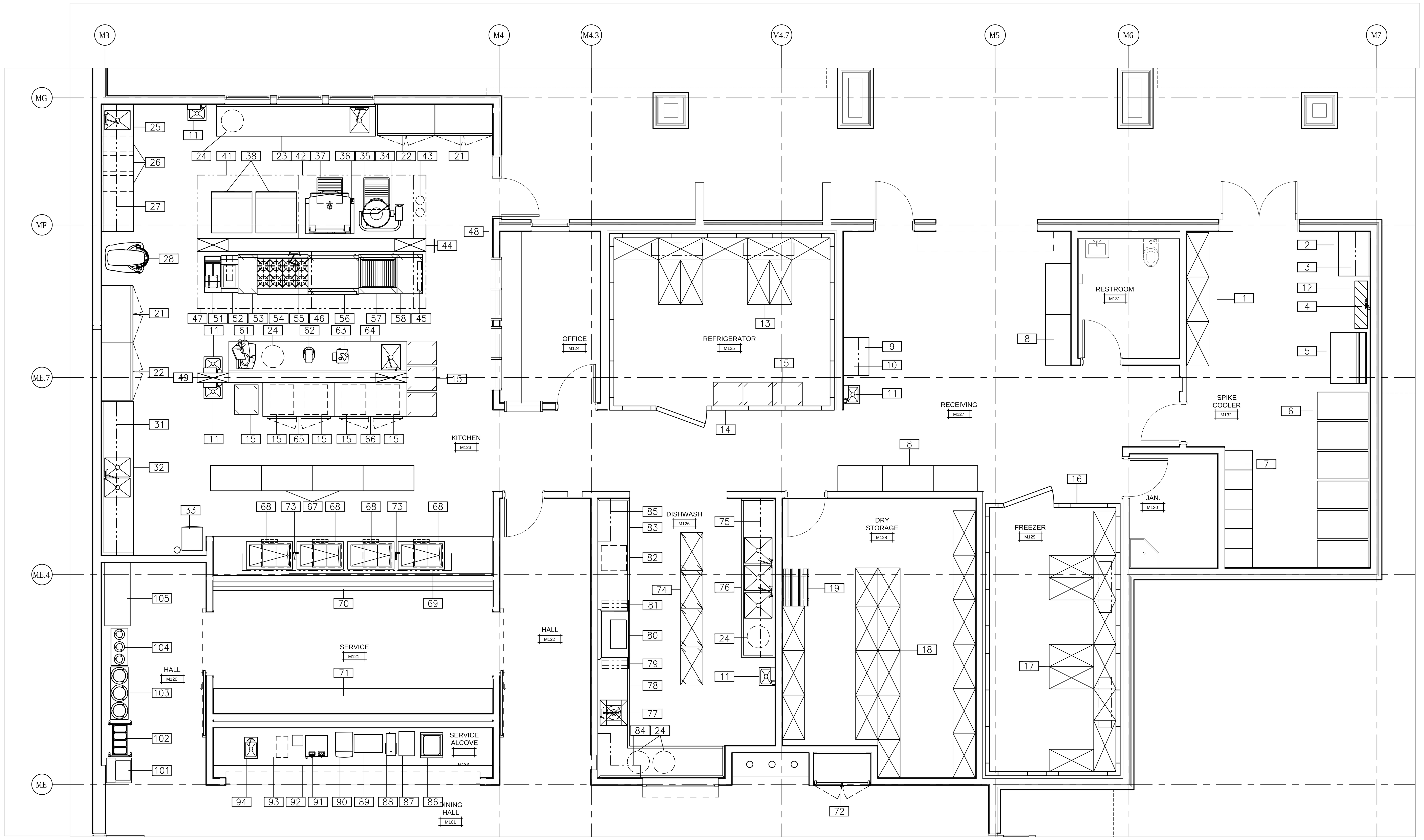

FOODSERVICE FLOOR PLAN

SCALE: 1/4" = 1'-0"

NOTES:

HEALTH DEPARTMENT REQUIREMENTS:

A. ALL EQUIPMENT, MANUFACTURED OR CUSTOM FABRICATED, TO HAVE NSF, ETL SANITATION OR UL SANITATION APPROVALS.

B. INSTALLATION TO MEET CALIFORNIA RETAIL FOOD CODE (CRFC) LATEST EDITION.

C. ALL EXPOSED PLUMBING AND GAS LINES MUST BE MOUNTED OR ENCLOSED SO AS TO FACILITATE CLEANING. AN EFFORT SHOULD BE MADE TO ENCLOSE ALL PLUMBING LINES WITHIN WALLS UNLESS OTHERWISE APPROVED.

D. ALL EQUIPMENT WHICH GENERATES CONDENSATE AND LIQUID WASTES FROM STEAM TABLES, ICE MACHINES AND BINS, UTENSIL WASH SINKS, FOOD PREPARATION SINKS, DISPLAY CASES, ETC. SHALL BE DRAINED BY MEANS OF INDIRECT WASTE PIPES INTO FLOOR SINK OR OTHER APPROVED INDIRECT WASTE RECEPTOR. FLOOR DRAINS ARE NOT TO BE USED IN LIEU OF FLOOR SINKS. ALL WASTE LINES MUST BE HARD PIPED FROM POINT OF CONNECTIONS.

E. ALL FLOOR SINKS SHALL BE AT LEAST HALF EXPOSED OR OTHERWISE READILY ACCESSIBLE FOR INSPECTION AND CLEANING. FLOOR SINK SHOULD NOT POSE A TRIPPING HAZARD (MOUNT ALL FLOOR SINKS FLUSH WITH FLOOR)

F. ALL EXPOSED ELECTRICAL LINES SHALL BE ENCLOSED WITHIN SMOOTH, RIGID CONDUIT AND BE MOUNTED OR ENCLOSED SO AS TO FACILITATE CLEANING. FLEX CONDUIT IS ONLY PERMITTED IF ENCLOSED WITHIN WALLS.

G. SUFFICIENT NATURAL OR ARTIFICIAL LIGHTING REQUIRED: FIFTY (50) FOOT-CANDLES IN FOOD PREPARATION, UTENSIL WASH, STORAGE, RESTROOMS.

H. SHATTER PROOF SHIELDS ON LIGHTS REQUIRED ABOVE FOOD PREPARATION, OPEN FOOD STORAGE, UTENSIL-CLEANING AREAS AND HOODS.

I. AN APPROVED FLOORING MATERIAL. FOUR INCH (MINIMUM) HIGH CONTINUOUSLY COVED BASE. (3/8" MIN. COVE AT WALL/FLOOR/EQUIPMENT JUNCTURE).

RECOMMENDED ARCHITECTURAL FINISHES:

A. FLOORS:
SEAMLESS WELDED SHEET VINYL, POURED EPOXY OR QUARRY TILE.
REQUIRED IN ALL KITCHEN AREAS, STORAGE, JANITOR ROOMS AND SHARED RESTROOMS.
SEE BUILDING CONDITIONS PLAN FOR COLD STORAGE ROOM REQUIREMENTS.

B. WALLS:
BACK OF HOUSE: FRP FROM TOP OF COVED FLOORING BASE TO FINISHED CEILING.
STAINLESS STEEL PROVIDED BY FOODSERVICE BEHIND COOKING EQUIPMENT.
FRONT OF HOUSE: PAINT OR CERAMIC TILE.

C. CEILINGS:
T-GRID WITH VILYLROCK OR SIMILAR LAY IN PANELS.
PAINTED HARD-LID GYP CEILING.

RECOMMENDED CONSTRUCTION:

A. WALLS BEHIND EXHAUST HOODS:
METAL STUD WITH 5/8" TYPE-X SHEET ROCK. EXTEND 18" BEYOND BACK AND SIDES OF HOOD.

B. CEILINGS:
MINIMUM CEILING HEIGHT 102-1/2" AFF. RECOMMEND 108" AFF.

C. COLD STORAGE ROOMS:
4" FINISHED FLOOR DEPRESSION.

EQUIPMENT SCHEDULE

ITEM	QTY	DESCRIPTION	MANUFACTURER	MODEL NUMBER	NOTES
1	LOT	MOBILE SHELVING	METRO	BR SERIES 63-FOUR TIER	
2	1	WORK TABLE	CUSTOM FABRICATED	SEE ELEVATIONS	
3	1	DOUBLE WALL SHELF	CUSTOM FABRICATED	SEE ELEVATIONS	
4	1	WATER FILLER	T&S	B-0600	
5	1	ICE MAKER W/ BIN (NUGGET)	MANITOWOC	RNS-1008A/D-970	
6	LOT	COOLERS	PROVIDED BY OWNER	NOT IN FSEC CONTRACT	NIC
7	LOT	TOTE STORAGE	PROVIDED BY OWNER	NOT IN FSEC CONTRACT	NIC
8	5	MOBILE WORK TABLES	CUSTOM FABRICATED	SEE ELEVATION DETAILS	
9	1	RECEIVING TABLE	CUSTOM FABRICATED	SEE ELEVATIONS	
10	1	DOUBLE WALL SHELF	CUSTOM FABRICATED	SEE ELEVATIONS	
11	5	HANDSINK/SIDESPLASH/EYE WASH	EAGLE GROUP/GUARDIAN	HSA-10-FTWS-LRS/G1848LH-L	
12	1	FLOOR TROUGH/GRATE	EAGLE GROUP	FT-1245-FGG CUSTOM	
13	LOT	SHELVING	METRO	MAX Q SERIES 74-FIVE TIER	
14	1	WALK-IN COOLER	DURACOLD	8-8 C MODULAR 4	
15	11	PAN RACK CART	METRO	RD78N	
16	1	WALK-IN FREEZER	DURACOLD	8-8 F MODULAR 4	
17	LOT	SHELVING	METRO	MAX Q SERIES 74-FIVE TIER	
18	LOT	MOBILE SHELVING	METRO	MAX Q SERIES 74-FIVE TIER	
19	1	CAN RACK	EAGLE GROUP	FCR-10-9A	
20		NOT USED			
21	2	4 HALF DR REACH IN REFRIG	TRUE	TS-49-4-HC	
22	2	4-HALF DR REACH IN FREEZER	TRUE	TS-49F-4-HC	
23	1	WORK TABLE WITH SINK	CUSTOM FABRICATED	SEE ELEVATIONS	
24	LOT	TRASH CONTAINER	PROVIDED BY OWNER	NOT IN FSEC CONTRACT	NIC
25	1	WORK TABLE WITH SINK	CUSTOM FABRICATED	SEE ELEVATIONS	
26	3	INGREDIENT BIN	RUBBERMAID	FG360088	
27	1	DOUBLE WALL SHELF	CUSTOM FABRICATED	SEE ELEVATIONS	
28	1	60 QUART MIXER	HOBART	HL600	
29		NOT USED			
30		NOT USED			
31	1	DOUBLE WALL SHELF	CUSTOM FABRICATED	SEE ELEVATIONS	
32	1	WORK TABLE WITH SINKS	CUSTOM FABRICATED	SEE ELEVATIONS	
33	1	ICE MACHINE/BIN	SCOTSMAN	N0422A/B-530	
34	1	40 GALLON TILT KETTLE	CROWN	ELT-40	
35	1	FLOOR TROUGH/GRATE	EAGLE GROUP	FT-2633-FG	
36	1	40 GALLON TILT SKILLET	CROWN	40P-STEM	
37	1	FLOOR TROUGH/GRATE	EAGLE GROUP	ASFT-2633-FG	
38	2	2-DECK CONVECTION OVEN	VULCAN	VC44E	
39		NOT USED			
40		NOT USED			
41	1	EXHAUST HOOD (TYPE-I)	STREIVOR AIR SYSTEMS	SAWCBD 96 60 22.5	
42	1	EXHAUST HOOD (TYPE-I)	STREIVOR AIR SYSTEMS	SAWCBD 108 60 22.5	
43	1	FIRE SUPPRESSION SYSTEM	STREIVOR AIR SYSTEMS	PYRO-CHEM KITCHEN KNIGHT II	
44	1	COOKLINE UTILITY WALL	STREIVOR AIR SYSTEMS	UCS-2	
45	1	VFD HOOD CONTROL PANEL	STREIVOR AIR SYSTEMS	DEMANDAIRE	
46	1	EXHAUST HOOD (TYPE-I)	STREIVOR AIR SYSTEMS	SAWCBD 96 60 22.5	
47	1	EXHAUST HOOD (TYPE-I)	STREIVOR AIR SYSTEMS	SAWCBD 108 60 22.5	
48	1	HOOD DISPLAY PANEL	STREIVOR AIR SYSTEMS	TOUCH SCREEN	
49	1	UTILITY WALL/PASS SHELF	STREIVOR AIR SYSTEMS	UCS-2	
50		NOT USED			
51	1	FRYER/FILTER	PITCO	SE14-FD	
52	1	FRYER DUMP STATION	PITCO	BNB-SE14	
53	1	SPREADER	JADE RANGE	JTPR-18	
54	1	OPEN BURNER RANGE	JADE RANGE	JBR-8-36	
55	1	FILL FAUCET	T & S	B-0610	
56	1	GRIDDLE/OVEN	JADE RANGE	JBR-48G-36	
57	1	BROILER	JADE RANGE	JBR-36B	

EQUIPMENT SCHEDULE

ITEM	QTY	DESCRIPTION	MANUFACTURER	MODEL NUMBER	NOTES
58	1	SPREADER	JADE RANGE	JTPR-24	
59		NOT USED			
60		NOT USED			
61	1	AUTOMATIC SLICER	HOBART	HS9N	
62	1	20 QUART MIXER	HOBART	HL-200	
63	1	FOOD PROCESSOR	ROBOT COUPE	R602	
64	1	WORK TABLE WITH SINK	CUSTOM FABRICATED	SEE ELEVATIONS	
65	1	ROLL-IN HEATED CABINET	TRAULSEN	AIH232H-FHS	
66	1	ROLL-IN REFRIGERATOR	TRAULSEN	ARI232HUT-FHS	
67	4	MOBILE WORK TABLES	CUSTOM FABRICATED	SEE ELEVATION DETAILS	
68	4	HOT / COLD WELL	LTI	QSCHP-3-H	
69	1	FOOD SHIELD W/ LED & HEAT	BSI	DECO-250N/2580	
70	1	SERVING COUNTER	CUSTOM FABRICATED	SEE ELEVATIONS/DETAILS	
71	1	SERVING COUNTER	CUSTOM FABRICATED	SEE ELEVATIONS/DETAILS	
72	1	GRAB N GO REFRIGERATOR	TRUE	FLM-54-TSL01	
73	2	FILL FAUCET	T&S	B-0208	
74	4	MOBILE DRY RACKS	METRO	NABR SERIES	
75	1	WALL SHELF/UTENSIL RACK	CUSTOM FABRICATED	SEE ELEVATIONS	
76	1	POT SINK	CUSTOM FABRICATED	SEE ELEVATIONS	
77	1	HOSE REEL/VACUUM BREAKER	T & S	B-1433	
78	1	SOILED DISHTABLE	CUSTOM FABRICATED	SEE ELEVATIONS	
79	1	VENT DUCT	CUSTOM FABRICATED	SEE ELEVATIONS	
80	1	DISHMACHINE (HIGH CHAMBER)	STERO	ER-44	
81	1	VENT DUCT	CUSTOM FABRICATED	SEE ELEVATIONS	
82	1	BOOSTER HEATER	HATCO	S-24	
83	1	CLEAN DISHTABLE	CUSTOM FABRICATED	SEE ELEVATIONS	
84	1	GLASS RACK SHELF	CUSTOM FABRICATED	SEE ELEVATIONS	
85	1	GLASS RACK SHELF	CUSTOM FABRICATED	SEE ELEVATIONS	
86	1	GLASS RACK LEVELER	DELFIELD	LT-2020	
87	1	JUICE DISPENSER	PROVIDED BY OWNER	NOT IN FSEC CONTRACT	NIC
88	1	ICED TEA BREWER	PROVIDED BY OWNER	NOT IN FSEC CONTRACT	NIC
89	1	MILK DISPENSER	SILVER KING	SKMAJ3-C4	
90	1	WATER / ICE DISPENSER	FOLLETT	12CI425A-L	
91	1	COFFEE BREWER	PROVIDED BY VENDOR	NOT IN FSEC CONTRACT	NIC
92	1	BEVERAGE COUNTER	SPECIFIED BY ARCHITECT	NOT IN FSEC CONTRACT	NIC
93	LOT	TRASH CONTAINER	PROVIDED BY OWNER	NOT IN FSEC CONTRACT	NIC
94	1	FILL SINK	ADVANCE TABCO	DI-1-10	
95	1	BEVERAGE COUNTER	SPECIFIED BY ARCHITECT	NOT IN FSEC CONTRACT	NIC
96	1	WATER DISPENSING SYSTEM	MICROMATIC	H20-UCM-M-KIT	
97		NOT USED			
98		NOT USED			
99		NOT USED			
100	1	REFRIGERATION SYSTEM	COOLTEC	REMOTE AIR COOLED (ROOF)	
101	1	TRAY DISPENSER	CADDY	CM-1418-C	
102	1	UTENSIL DISPENSER	CADDY	T-305	
103	1	PLATE DISPENSER	CADDY	CMS-503	
104	1	BOWL DISPENSER	CADDY	CMS-103	
105	1	STAGING TABLE	EAGLE GROUP	T2460SEM-BS	

ABBREVIATIONS:
FSEC FOODSERVICE EQUIPMENT CONTRACTOR
S/S STAINLESS STEEL
U/C UNDER COUNTER
S&T SOAP AND TOWEL
NIC NOT IN CONTRACT

SCHEDULE / DRAWING NOTES:

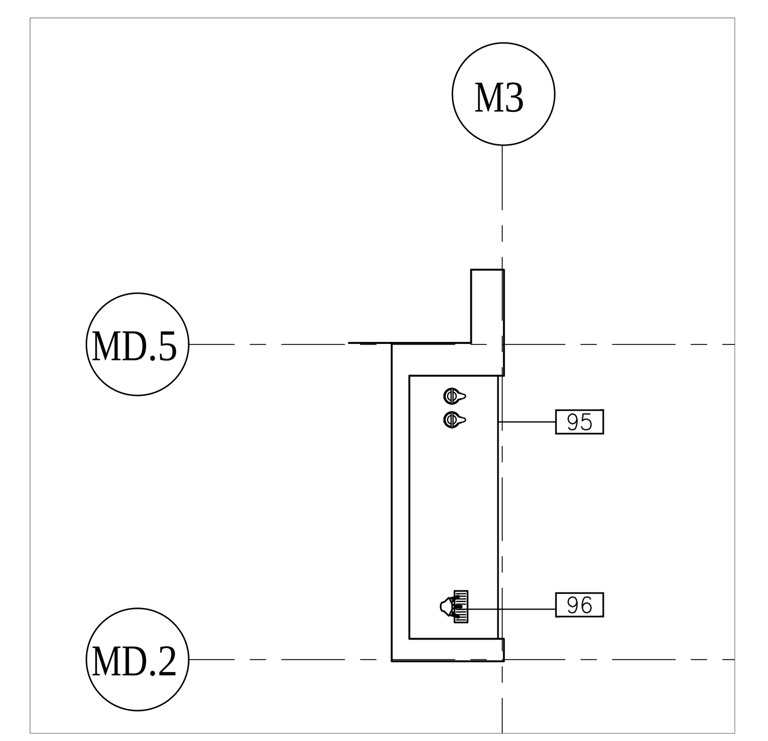

FOODSERVICE EQUIP PLAN - DINING ROOM

SCALE: 1/4" = 1'-0"

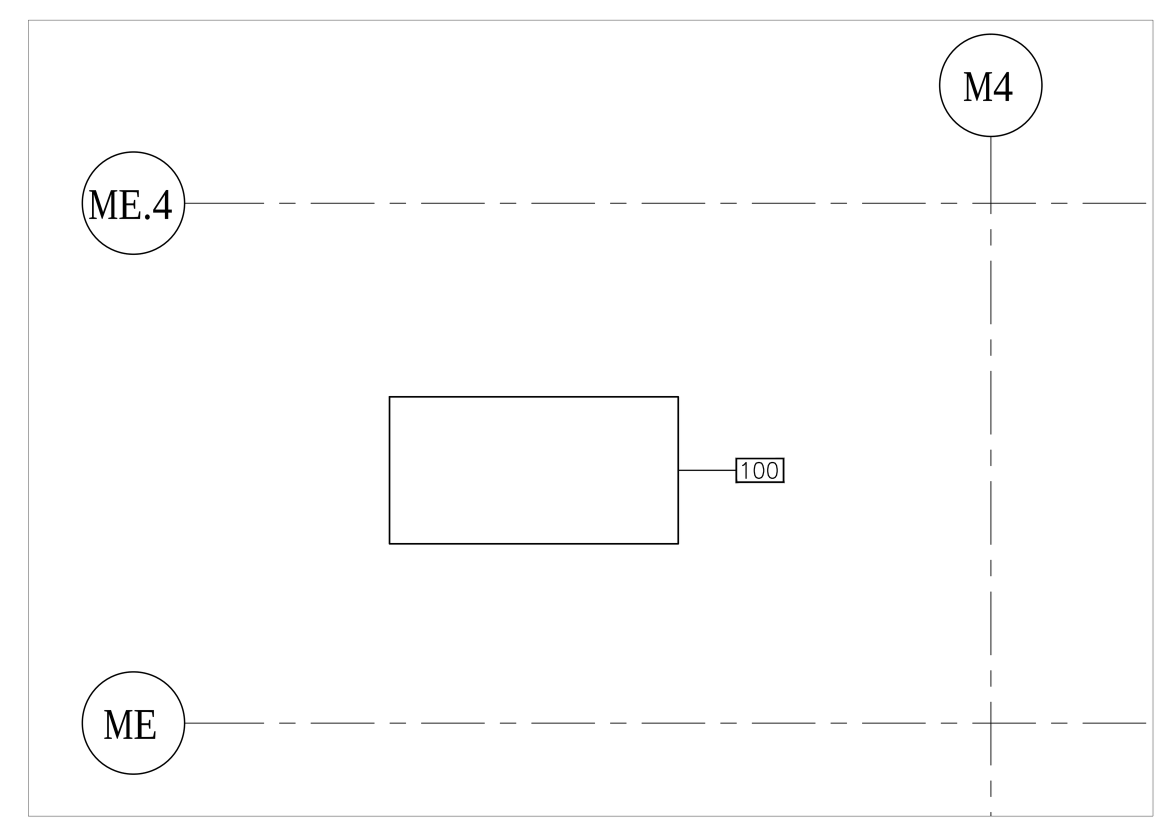

ROOF MOUNT REFRIGERATION SYSTEM

SCALE: 1/4" = 1'-0"

IDENTIFICATION STAMP
DIV. OF THE STATE ARCHITECT
APP: 02-118630 INC:
REVIEWED FOR
SS ☐ FLS ☐ ACS ☑
DATE: 04/13/2021

OFFICE OF THE STATE FIRE MARSHAL
APPROVED FIRE AND PANIC ONLY
Approval of this plan does not authorize or approve any omission or deviation from applicable regulations. Final approval is subject to field inspection. One set of approved plans shall be available on the project site at all times.
PERMIT NO.: 20-N-2332-CP
REVIEWED BY: LITO CATAYLO, OSFM
DATE: 4/ 1 /2021

DGS GENERAL SERVICES
Department of General Services
State of California
Real Estate Services Division
Project Management & Development Branch
707 Third Street, Suite 4-105
West Sacramento, California 95605

NM&R
NICHOLS MELBURG & ROSSETTO
ARCHITECTS + ENGINEERS
300 Knollcrest Drive
Redding, CA. 96002
(530) 222-3300 (530) 222-3538 FAX
http://www.nmrdesign.com

Copyright © 2021
All ideas, designs, arrangements and plans indicated or represented by this drawing are owned by, and the property of, NICHOLS, MELBURG and ROSSETTO and were created, evolved and developed for use on, and in conjunction with, the specified project. None of such ideas, designs, arrangements or plans shall be used by, or disclosed to any person, firm or corporation for any purpose whatsoever without the written permission of NICHOLS, MELBURG and ROSSETTO.

LICENSE STAMPS
LICENSED ARCHITECT KYLE MATTI C 27504 REN. 10/31/21 STATE OF CALIFORNIA

CONSULTANT
The Marshall Associates, Inc.
Foodservice & Laundry Consultants/Designers
3000 Danville Blvd Suite F-344 Alamo, CA 94507
2129 4th Street Santa Rosa, CA 95404
415/677-1200 Fax 415/677-1210

DRAWING STATUS
CONSTRUCTION DOCUMENTS

ISSUE

No.	Date	Description
1	10/22/2020	INITIAL PLAN REVIEW
2	01/08/2021	AGENCY RESUBMITTAL
3	03/22/2021	AGENCY RESUBMITTAL

If drawing is not 30" x 42" it is a reduced print

PROJECT
RESIDENTIAL CENTER, UKIAH: REPLACEMENT OF EXISTING RESIDENTIAL CENTER
440 EAST HILL ROAD
WILLITS, CALIFORNIA 95490
MENDOCINO COUNTY
CALIFORNIA CONSERVATION CORP

Supervisor | Designed | Drawn

DSA Application No.
02-118630

SHEET TITLE
FOODSERVICE
EQUIPMENT PLAN

DGS Project Number 000000000001826
NMR Project Number 18-6456

Reference North: NORTH
Sheet Scale
Sheet Number
FS-111

ISSUE DATE
July 9, 2021

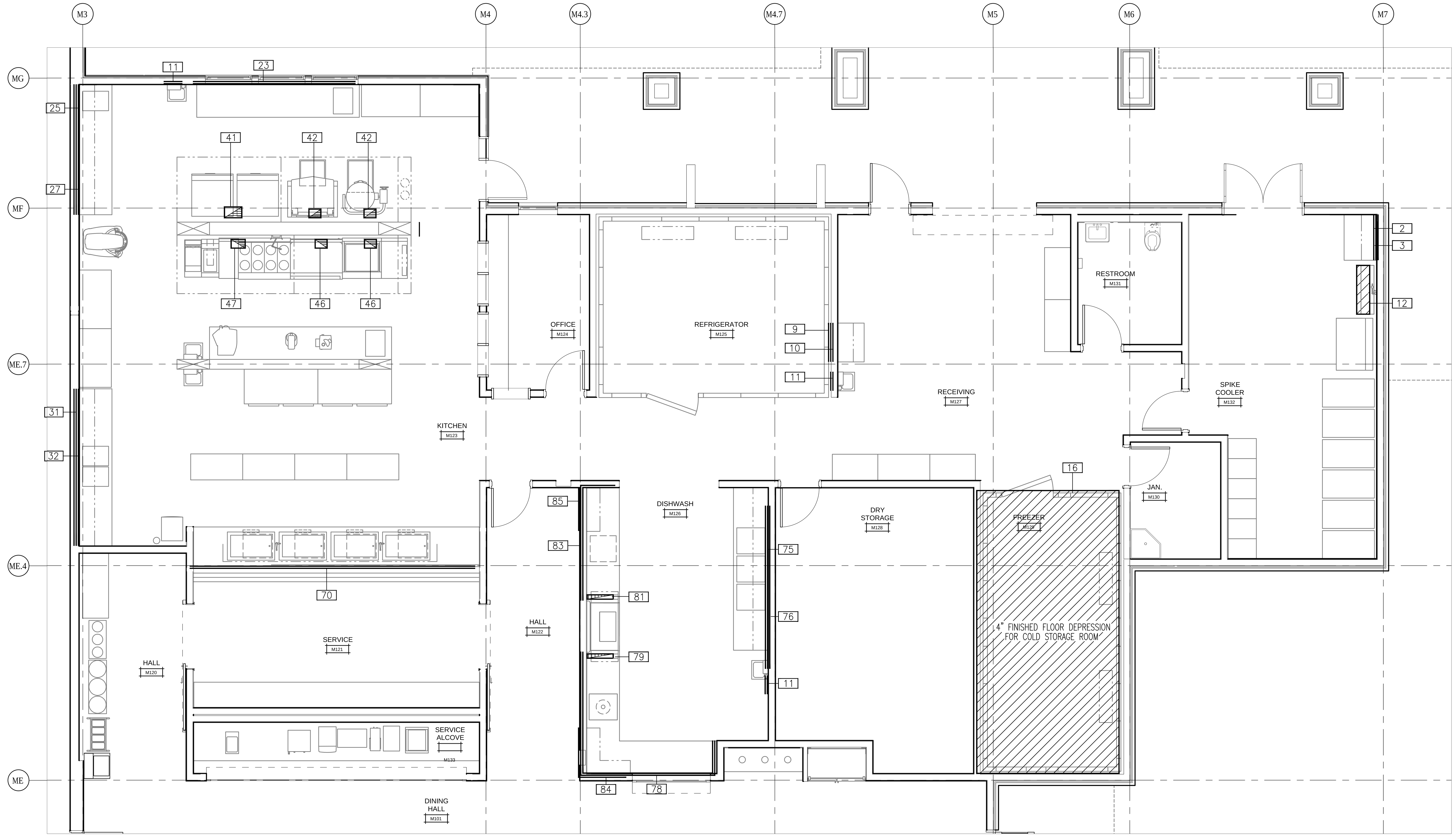

FOODSERVICE FLOOR PLAN

SCALE: 1/4" = 1'-0"

VENTILATION / BUILDING CONDITIONS / AIR

ITEM	QTY	DESCRIPTION	VENTILATION EXHAUST SIZE	VENTILATION EXHAUST CFM	VENTILATION EXHAUST WGSP	VENTILATION SUPPLY SIZE	VENTILATION SUPPLY CFM	VENTILATION SUPPLY WGSP	WALL BACKING HT	WALL BACKING OC	COMPRESSED AIR SUP	COMPRESSED AIR CFM	COMPRESSED AIR HT
1	LOT	MOBILE SHELVING											
2	1	WORK TABLE											
3	1	DOUBLE WALL SHELF							21"	60"			
4	1	WATER FILLER											
5	1	ICE MAKER W/ BIN (NUGGET)											
6	LOT	COOLERS											
7	LOT	TOTE STORAGE											
8	5	MOBILE WORK TABLES											
9	1	RECEIVING TABLE							12"	56"			
10	1	DOUBLE WALL SHELF							21"	60"			
11	5	HANDSINK/SIDESPLASH/EYE WASH											
12	1	FLOOR TROUGH/GRATE											
13	LOT	SHELVING											
14	1	WALK-IN COOLER											
15	11	PAN RACK CART											
16	1	WALK-IN FREEZER											
17	LOT	SHELVING											
18	LOT	MOBILE SHELVING											
19	1	CAN RACK											
20		NOT USED											
21	2	4 HALF DR REACH IN REFRIG											
22	2	4-HALF DR REACH IN FREEZER											
23	1	WORK TABLE WITH SINK											
24	LOT	TRASH CONTAINER											
25	1	WORK TABLE WITH SINK											
26	3	INGREDIENT BIN											
27	1	DOUBLE WALL SHELF							21"	60"			
28	1	60 QUART MIXER											
29		NOT USED											
30		NOT USED											
31	1	DOUBLE WALL SHELF							21"	60"			
32	1	WORK TABLE WITH SINKS											
33	1	ICE MACHINE/BIN											
34	1	40 GALLON TILT KETTLE											
35	1	FLOOR TROUGH/GRATE											
36	1	40 GALLON TILT SKILLET											
37	1	FLOOR TROUGH/GRATE											
38	2	2-DECK CONVECTION OVEN											
39		NOT USED											
40		NOT USED											
41	1	EXHAUST HOOD (TYPE-I)	16"x10"	1680	.55								
42	1	EXHAUST HOOD (TYPE-I)	(2) 11"x8"	1890	.55								
43	1	FIRE SUPPRESSION SYSTEM											
44	1	COOKLINE UTILITY WALL											
45	1	VFD HOOD CONTROL PANEL											
46	1	EXHAUST HOOD (TYPE-I)	(2) 11"x8"	1980	.77								
47	1	EXHAUST HOOD (TYPE-I)	(2) 13"x8"	2164	.77								
48	1	HOOD DISPLAY PANEL											
49	1	UTILITY WALL/PASS SHELF											
50		NOT USED											
51	1	FRYER/FILTER											
52	1	FRYER DUMP STATION											
53	1	SPREADER											
54	1	OPEN BURNER RANGE											
55	1	FILL FAUCET											
56	1	GRIDDLE/OVEN											
57	1	BROILER											

VENTILATION / BUILDING CONDITIONS / AIR

ITEM	QTY	DESCRIPTION	VENTILATION EXHAUST SIZE	VENTILATION EXHAUST CFM	VENTILATION EXHAUST WGSP	VENTILATION SUPPLY SIZE	VENTILATION SUPPLY CFM	VENTILATION SUPPLY WGSP	WALL BACKING HT	WALL BACKING OC	COMPRESSED AIR SUP	COMPRESSED AIR CFM	COMPRESSED AIR HT
58	1	SPREADER											
59		NOT USED											
60		NOT USED											
61	1	AUTOMATIC SLICER											
62	1	20 QUART MIXER											
63	1	FOOD PROCESSOR											
64	1	WORK TABLE WITH SINK											
65	1	ROLL-IN HEATED CABINET											
66	1	ROLL-IN REFRIGERATOR											
67	4	MOBILE WORK TABLES											
68	4	HOT / COLD WELL											
69	1	FOOD SHIELD W/ LED & HEAT											
70	1	SERVING COUNTER							6"	34"			
71	1	SERVING COUNTER							6"	34"			
72	1	GRAB N GO REFRIGERATOR											
73	2	FILL FAUCET											
74	4	MOBILE DRY RACKS											
75	1	WALL SHELF/UTENSIL RACK							12"	63"			
76	1	POT SINK							6"	46"			
77	1	HOSE REEL/VACUUM BREAKER							12"	90"			
78	1	SOILED DISHTABLE							6"	45"			
79	1	VENT DUCT	4"x24"	200	0.25"								
80	1	DISHMACHINE (HIGH CHAMBER)											
81	1	VENT DUCT	4"x24"	400	0.25"								
82	1	BOOSTER HEATER											
83	1	CLEAN DISHTABLE							6"	42"			
84	1	GLASS RACK SHELF							18"	63"			
85	1	GLASS RACK SHELF							18"	63"			
86	1	GLASS RACK LEVELER											
87	1	JUICE DISPENSER											
88	1	ICED TEA BREWER											
89	1	MILK DISPENSER											
90	1	WATER / ICE DISPENSER											
91	1	COFFEE BREWER											
92	1	BEVERAGE COUNTER											
93	LOT	TRASH CONTAINER											
94	1	FILL SINK											
95	1	BEVERAGE COUNTER											
96	1	WATER DISPENSING SYSTEM											
97		NOT USED											
98		NOT USED											
99		NOT USED											
100	1	REFRIGERATION SYSTEM											
101	1	TRAY DISPENSER											
102	1	UTENSIL DISPENSER											
103	1	PLATE DISPENSER											
104	1	BOWL DISPENSER											
105	1	STAGING TABLE											

ABBREVIATIONS:

CFM	CUBIC FEET/MINUTE	STUB	UTILITY UP FROM FLOOR
WGSP	WATER GAUGE STATIC PRESSURE	SUP	SUPPLY
HT	HEIGHT		
OC	ON CENTER		
FA	FROM ABOVE		

SCHEDULE / DRAWING NOTES:

CONNECTED LOAD = EACH CONNECTION AS SHOWN ON DRAWING

NOTES:

GENERAL CONTRACTOR TO PROVIDE:

A. WORK AS DESCRIBED IN CONTRACT DOCUMENTS AND SUPPLEMENTAL REQUIREMENTS PER FOODSERVICE EQUIPMENT SECTION.

B. WALLS, FLOORS AND CEILINGS IN FOODSERVICE AND WASHING AREAS OR ANY OTHER LOCATION WHERE FOOD OR BEVERAGES ARE PREPARED, SHALL BE SMOOTH, EASILY CLEANABLE, NON-ABSORBENT AND DURABLE. WALLS AND CEILINGS SHALL BE "LIGHT-IN COLOR".

C. OPENINGS/ACCESS FOR ALL FOODSERVICE EQUIPMENT.

D. WALL BACKING FOR WALL MOUNTED FOODSERVICE EQUIPMENT, SEE DETAIL, THIS SHEET.

E. WALLS WITH SOUND CONTROL BETWEEN DISHROOMS AND PUBLIC AREAS.

F. FLOOR DEPRESSIONS FOR COLD STORAGE ROOMS.

G. CONDUIT FOR BEVERAGE LINES.

H. CONDUIT FOR REFRIGERATION LINES.

I. COVED FINISHED FLOOR MATERIALS AT ALL VERTICAL SURFACES. (3/8" MINIMUM)

J. SLEEVES/ACCESS FOR REFRIGERATION PIPING.

K. ROOF CURB WITH GALVANIZED SHEET METAL CAP FOR REMOTE REFRIGERATION SYSTEM.

L. FIRE RATED MATERIALS AND OR INSULATION AS REQUIRED FOR EXHAUST DUCTS, VENT STACKS, HEAT PRODUCING EQUIPMENT, ROOF/WALL PENETRATIONS PER LOCAL CODES.

M. FILL EXCESS FLOOR DEPRESSIONS AROUND RECESSED COLD STORAGE ROOM COMPARTMENTS WITH GROUT, FINISH FLOOR MATERIAL AND COVED BASE AFTER INSTALLATION.

N. POSITIVE SLOPE TO FLOOR SINKS, FLOOR DRAINS AND FLOOR TROUGHS.

O. SEE EQUIPMENT PLAN FOR ADDITIONAL HEALTH DEPARTMENT NOTES/REQUIREMENTS.

MECHANICAL CONTRACTOR TO PROVIDE:

H. WORK AS DESCRIBED IN CONTRACT DOCUMENTS AND SUPPLEMENTAL REQUIREMENTS PER FOODSERVICE EQUIPMENT SECTION.

I. EXHAUST SYSTEMS AND CONTROLS INCLUDING VFD'S AS REQUIRED.

J. FINAL DUCT CONNECTIONS TO EXHAUST HOODS.

K. MAKE-UP AIR DIFFUSERS: DO NOT PLACE ANY DIFFUSERS WITHIN 10'-0" OF EXHAUST HOODS AND DO NOT HAVE ANY MAKE-UP AIR DIRECTED TOWARD EXHAUST HOODS.

SYMBOLS:

- EXHAUST DUCT CONNECTION
- SUPPLY DUCT CONNECTION
- BEVERAGE/REFRIG LINE CONDUIT
- FLOOR DEPRESSION
- 16 GA WALL BACKING

WALL BACKING DETAIL

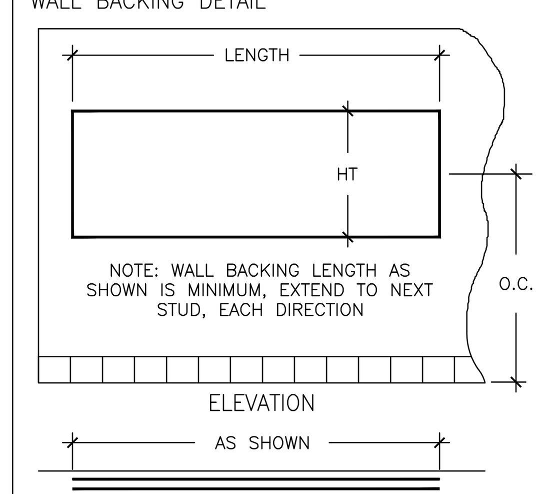

WALL BACKING PROVIDED BY GENERAL CONTRACTOR. OVERALL HEIGHT AND CENTER LINE OF BACKING AS SHOWN IN SCHEDULE.

COLD STORAGE ROOM FLOOR – FREEZER

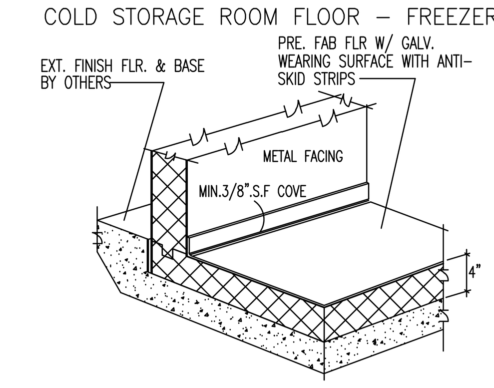

IDENTIFICATION STAMP
DIV. OF THE STATE ARCHITECT
APP: 02-118630 INC:
REVIEWED FOR
SS ☐ FLS ☐ ACS ☑
DATE: 04/13/2021

OFFICE OF THE STATE FIRE MARSHAL
APPROVED FIRE AND PANIC ONLY
Approval of this plan does not authorize or approve any omission or deviation from applicable regulations. Final approval is subject to field inspection. One set of approved plans shall be available on the project site at all times.
PERMIT NO.: 20-N-2332-CP
REVIEWED BY: LITO CATAYLO, OSFM
DATE: 4/1/2021

DGS GENERAL SERVICES

Department of General Services
State of California
Real Estate Services Division
Project Management & Development Branch
707 Third Street, Suite 4-105
West Sacramento, California 95605

NICHOLS MELBURG & ROSSETTO
ARCHITECTS + ENGINEERS
300 Knollcrest Drive
Redding, CA. 96002
(530) 222-3300 (530) 222-3538 FAX
http://www.nmrdesign.com

Copyright © 2021
All ideas, designs, arrangements and plans indicated or represented by this drawing are owned by, and the property of, NICHOLS, MELBURG and ROSSETTO and were created, evolved and developed for use on, and in conjunction with, the specified project. None of such ideas, designs, arrangements or plans shall be used by, or disclosed to any person, firm or corporation for any purpose whatsoever without the written permission of NICHOLS, MELBURG and ROSSETTO.

LICENSE STAMPS

LICENSED ARCHITECT
KYLE MATTI
C 27504
REN. 10/31/21
STATE OF CALIFORNIA

CONSULTANT

The Marshall Associates, Inc.
Foodservice & Laundry Consultants/Designers
3000 Danville Blvd Suite F-344 Alamo, CA 94507
2129 4th Street Santa Rosa, CA 95404
415/677-1200 Fax 415/677-1210

DRAWING STATUS
CONSTRUCTION DOCUMENTS

ISSUE

No.	Date	Description
1	10/22/2020	INITIAL PLAN REVIEW
2	01/08/2021	AGENCY RESUBMITTAL
3	03/22/2021	AGENCY RESUBMITTAL

If drawing is not 30" x 42" it is a reduced print

PROJECT
RESIDENTIAL CENTER, UKIAH: REPLACEMENT OF EXISTING RESIDENTIAL CENTER
440 EAST HILL ROAD
WILLITS, CALIFORNIA 95490
MENDOCINO COUNTY
CALIFORNIA CONSERVATION CORP

Supervisor | Designed | Drawn

DSA Application No.
02-118630

SHEET TITLE
FOODSERVICE
BUILDING CONDITIONS & VENTILATION PLAN

DGS Project Number 000000000001826
NMR Project Number 18-6456

Reference North
NORTH

Sheet Scale

Sheet Number
FS-112

ISSUE DATE
July 9, 2021

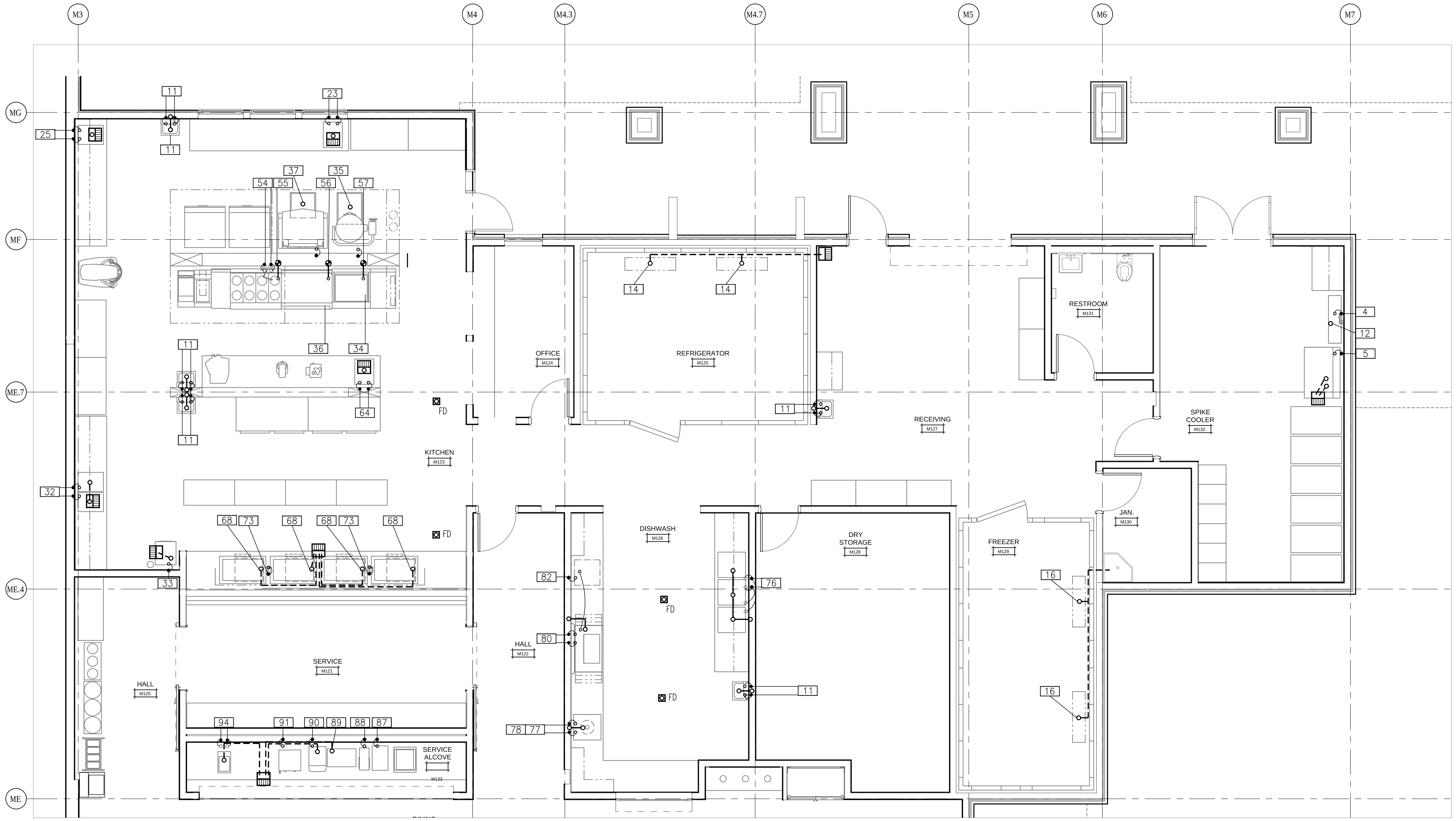

FOODSERVICE FLOOR PLAN

SCALE: 1/4" = 1'-0"

PLUMBING ROUGH-IN

ITEM	QTY	DESCRIPTION	WATER				WASTE			GAS			CHILLED WATER				STEAM			
			CW	HW	HT	GPH	IND	DIR	HT	SUP	MBH	HT	SUP	RET	HT	GPM	SUP	RET	HT	LB/HR
1	LOT	MOBILE SHELVING																		
2	1	WORK TABLE																		
3	1	DOUBLE WALL SHELF																		
4	1	WATER FILLER	1/2"		60"															
5	1	ICE MAKER W/ BIN (NUGGET)	1/2"		64"		1"													
6	LOT	COOLERS																		
7	LOT	TOTE STORAGE																		
8	5	MOBILE WORK TABLES																		
9	1	RECEIVING TABLE																		
10	1	DOUBLE WALL SHELF																		
11	5	HANDSINK/SIDESPLASH/EYE WASH	1/2"	1/2"	18"	5		1-1/2"	21"											
12	1	FLOOR TROUGH/GRATE						4"	-7"											
13	LOT	SHELVING																		
14	1	WALK-IN COOLER					1"													
15	11	PAN RACK CART																		
16	1	WALK-IN FREEZER					1"													
17	LOT	SHELVING																		
18	LOT	MOBILE SHELVING																		
19	1	CAN RACK																		
20		NOT USED																		
21	2	4 HALF DR REACH IN REFRIG																		
22	2	4-HALF DR REACH IN FREEZER																		
23	1	WORK TABLE WITH SINK	1/2"	1/2"	SD	10	1-1/2"													
24	LOT	TRASH CONTAINER																		
25	1	WORK TABLE WITH SINK	1/2"	1/2"	SD	10	1-1/2"													
26	3	INGREDIENT BIN																		
27	1	DOUBLE WALL SHELF																		
28	1	60 QUART MIXER																		
29		NOT USED																		
30		NOT USED																		
31	1	DOUBLE WALL SHELF																		
32	1	WORK TABLE WITH SINKS	1/2"	1/2"	SD	20	1-1/2"													
33	1	ICE MACHINE/BIN	1/2"		72"		1"													
34	1	40 GALLON TILT KETTLE	1/2"	1/2"	SD	30														
35	1	FLOOR TROUGH/GRATE						4"	-7"											
36	1	40 GALLON TILT SKILLET	1/2"	1/2"	SD	30														
37	1	FLOOR TROUGH/GRATE						4"	-7"											
38	2	2-DECK CONVECTION OVEN																		
39		NOT USED																		
40		NOT USED																		
41	1	EXHAUST HOOD (TYPE-I)																		
42	1	EXHAUST HOOD (TYPE-I)																		
43	1	FIRE SUPPRESSION SYSTEM																		
44	1	COOKLINE UTILITY WALL																		
45	1	VFD HOOD CONTROL PANEL																		
46	1	EXHAUST HOOD (TYPE-I)																		
47	1	EXHAUST HOOD (TYPE-I)																		
48	1	HOOD DISPLAY PANEL																		
49	1	UTILITY WALL/PASS SHELF																		
50		NOT USED																		
51	1	FRYER/FILTER																		
52	1	FRYER DUMP STATION																		
53	1	SPREADER																		
54	1	OPEN BURNER RANGE								1"	270	SD								
55	1	FILL FAUCET	1/2"	1/2"	SD	5														
56	1	GRIDDLE/OVEN								1"	126	SD								
57	1	BROILER								1"	90	SD								

PLUMBING ROUGH-IN

ITEM	QTY	DESCRIPTION	WATER				WASTE			GAS			CHILLED WATER				STEAM			
			CW	HW	HT	GPH	IND	DIR	HT	SUP	MBH	HT	SUP	RET	HT	GPM	SUP	RET	HT	LB/HR
58	1	SPREADER																		
59		NOT USED																		
60		NOT USED																		
61	1	AUTOMATIC SLICER																		
62	1	20 QUART MIXER																		
63	1	FOOD PROCESSOR																		
64	1	WORK TABLE WITH SINK	1/2"	1/2"	SD	10	1-1/2"													
65	1	ROLL-IN HEATED CABINET																		
66	1	ROLL-IN REFRIGERATOR																		
67	4	MOBILE WORK TABLES																		
68	4	HOT / COLD WELL					1"													
69	1	FOOD SHIELD W/ LED & HEAT																		
70	1	SERVING COUNTER																		
71	1	SERVING COUNTER																		
72	1	GRAB N GO REFRIGERATOR																		
73	2	FILL FAUCET		1/2"	18"															
74	4	MOBILE DRY RACKS																		
75	1	WALL SHELF/UTENSIL RACK																		
76	1	POT SINK	1/2"	1/2"	SD	45		2"	12"											
77	1	HOSE REEL/VACUUM BREAKER	3/4"	3/4"	18"	10														
78	1	SOILED DISHTABLE						2"	20"											
79	1	VENT DUCT																		
80	1	DISHMACHINE (HIGH CHAMBER)	1/2"	3/4"	18"	10		2"	11"											
81	1	VENT DUCT																		
82	1	BOOSTER HEATER		3/4"	18"	120														
83	1	CLEAN DISHTABLE																		
84	1	GLASS RACK SHELF																		
85	1	GLASS RACK SHELF																		
86	1	GLASS RACK LEVELER																		
87	1	JUICE DISPENSER	1/2"		24"															
88	1	ICED TEA BREWER	1/2"		24"															
89	1	MILK DISPENSER					1"													
90	1	WATER / ICE DISPENSER	1/2"		18"		1"													
91	1	COFFEE BREWER	1/2"		24"															
92	1	BEVERAGE COUNTER																		
93	LOT	TRASH CONTAINER																		
94	1	FILL SINK	1/2"	1/2"	18"	5	1-1/2"													
95	1	BEVERAGE COUNTER																		
96	1	WATER DISPENSING SYSTEM	1/2"		18"		1"													
97		NOT USED																		
98		NOT USED																		
99		NOT USED																		
100	1	REFRIGERATION SYSTEM																		
101	1	TRAY DISPENSER																		
102	1	UTENSIL DISPENSER																		
103	1	PLATE DISPENSER																		
104	1	BOWL DISPENSER																		
105	1	STAGING TABLE																		

ABBREVIATIONS:

CW	COLD WATER	MBH	BRITISH THERMAL UNIT x 1000	HT	HEIGHT
HW	HOT WATER	SUP	SUPPLY	SD	STUB DOWN FROM UTILITY WALL
GPH	GALLONS PER HOUR (HOT WATER)	RET	RETURN	FA	FROM ABOVE
IND	INDIRECT WASTE (AIR GAP)	GPM	GALLONS PER MINUTE	STUB	UTILITY UP FROM FLOOR
DIR	DIRECT WASTE	BHP	BOILER HORSE POWER		

SCHEDULE / DRAWING NOTES:

CONNECTED LOAD = EACH CONNECTION AS SHOWN ON DRAWING

REFER TO PLUMBING DRAWINGS FOR FLOOR DRAIN INFORMATION

NOTES:

PLUMBING CONTRACTOR TO PROVIDE:

A. WORK AS DESCRIBED IN CONTRACT DOCUMENTS AND SUPPLEMENTAL REQUIREMENTS PER FOODSERVICE EQUIPMENT SECTION.

B. ROUGH-IN AND FINAL CONNECTIONS TO ALL FOODSERVICE EQUIPMENT AS INDICATED ON DRAWINGS AND IN PLUMBING ROUGH-IN SCHEDULE, INCLUDING ALL MATERIALS SUCH AS STOPS, VALVES, FILTERS, TRAPS, CHECK VALVES, PIPING, TUBING AND SHUT OFF'S AS REQUIRED.

C. MINIMUM 120 DEGREE HOT WATER WITH THE EXCEPTION OF HAND WASH SINKS.

D. PRESSURE REDUCING VALVE TO 20 PSI FOR DISHWASHERS/ BOOSTER HEATERS.

E. ALL WASTE LINES AS NOTED.

F. MINIMUM DIAMETER OF LINE AS INDICATED ON SCHEDULE REGARDLESS OF CONNECTION SIZE.

G. ALL DRAINS SLOPED DOWNWARD WITH ADEQUATE CLEAN-OUT PROVISIONS.

H. MAINTAIN DRAINS AS HIGH AS POSSIBLE ABOVE FLOOR.

I. ALL EXPOSED DRAIN LINES TO BE FINISHED IN STAINLESS STEEL PAINT (SEYMOUR 16-054).

J. INSULATION ON ALL HOT WATER AND CONDENSATE LINES.

K. FLOOR SINKS/FLOOR DRAINS. (SET FLUSH WITH FINISHED FLOOR).

L. ALL VENT PIPES ARE TO BE CONCEALED IN WALLS, COLUMNS OR CHASES, USE LOOP-VENTS FOR ISLAND FIXTURES.

M. MOP SINK, HOSE BIBB WITH VACUUM BREAKER AND MOP RACK.

N. INTERCONNECTION BETWEEN BOOSTER HEATER AND DISHMACHINE.

O. INTERCONNECTION BETWEEN DISPOSER, VACUUM BREAKER, AND PROVIDED SOLENOIDS.

P. INTERCONNECTION BETWEEN ROUGH-IN AND HOSE REEL/VACUUM BREAKER.

Q. INTERCONNECTION BETWEEN VENTILATOR AND CONTROL PANEL.

R. HEAT TAPE FOR FREEZER COMPARTMENT INDIRECT WASTE LINE.

S. GREASE TRAPS/INTERCEPTORS (LOCATED OUTSIDE OF KITCHEN AREA) AS SPECIFIED UNDER PLUMBING SECTION.

T. INSTALLATION OF FIRE PROTECTION SYSTEM GAS SHUT-OFF VALVE AND Y-STRAINER, 3" MAXIMUM DIA. (PROVIDED BY HOOD MANUFACTURER/FOODSERVICE EQUIPMENT CONTRACTOR).

U. SEE EQUIPMENT PLAN FOR ADDITIONAL HEALTH DEPARTMENT NOTES/REQUIREMENTS.

SYMBOLS:

HOT OR COLD WATER ROUGH-IN/CONNECTION

HOT AND COLD WATER ROUGH-IN/CONNECTION

HOT AND COLD WATER ROUGH-IN/ CONNECTION WITH BRANCH CONNECTION

GAS SUPPLY ROUGH-IN/CONNECTION

DIRECT WASTE DRAIN ROUGH-IN/CONNECTION

INDIRECT WASTE DRAIN TO FLOOR SINK

FLOOR SINK WASTE CONNECTION SHOWN ON PLAN

FLOOR DRAIN 2" WASTE WITH TRAP PRIMER

HEALTH DEPT. COUNTER CONSTRUCTION

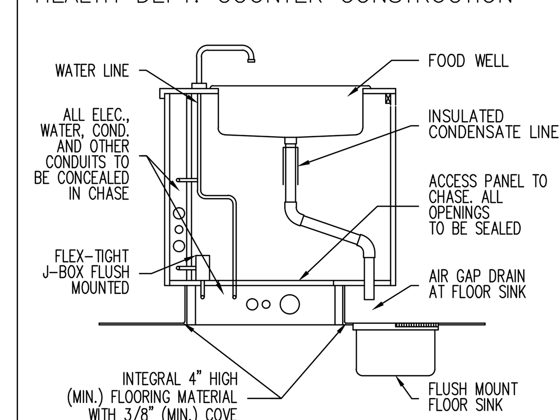

TYPICAL HEALTH DEPARTMENT REQUIREMENTS: DO NOT RUN CONDUIT, PIPES, ETC. ON HORIZONTAL SURFACES IN CABINETS. INSTALL ALL LINES VERTICAL. STUD ALL LINES AT FIXTURE

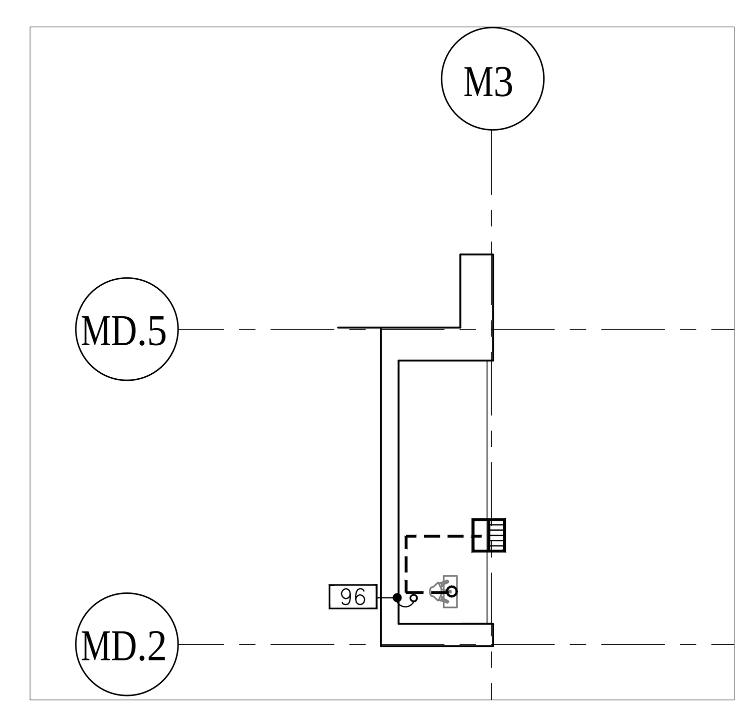

FOODSERVICE EQUIP PLAN - DINING ROOM

SCALE: 1/4" = 1'-0"

IDENTIFICATION STAMP
DIV. OF THE STATE ARCHITECT
APP: 02-118630 INC:
REVIEWED FOR
SS ☐ FLS ☐ ACS ☑
DATE: 04/13/2021

OFFICE OF THE STATE FIRE MARSHAL
APPROVED FIRE AND PANIC ONLY
Approval of this plan does not authorize or approve any omission or deviation from applicable regulations. Final approval is subject to field inspection. One set of approved plans shall be available on the project site at all times.
PERMIT NO.: 20-N-2332-CP
REVIEWED BY: LITO CATAYLO, OSFM
DATE: 3/ / /2021

DGS GENERAL SERVICES
Department of General Services
State of California
Real Estate Services Division
Project Management & Development Branch
707 Third Street, Suite 4-105
West Sacramento, California 95605

NICHOLS MELBURG & ROSSETTO
ARCHITECTS + ENGINEERS
300 Knollcrest Drive
Redding, CA. 96002
(530) 222-3300 (530) 222-3538 FAX
http://www.nmrdesign.com

Copyright © 2021
All ideas, designs, arrangements and plans indicated or represented by this drawing are owned by, and the property of, NICHOLS, MELBURG and ROSSETTO and were created, evolved and developed for use on, and in conjunction with, the specified project. None of such ideas, designs, arrangements or plans shall be used by, or disclosed to any person, firm or corporation for any purpose whatsoever without the written permission of NICHOLS, MELBURG and ROSSETTO.

LICENSE STAMPS

LICENSED ARCHITECT KYLE MATTI C 27504 REN. 10/31/21 STATE OF CALIFORNIA

CONSULTANT
The Marshall Associates, Inc.
Foodservice & Laundry Consultants/Designers
3000 Danville Blvd Suite F-344 Alamo, CA 94507
2129 4th Street Santa Rosa, CA 95404
415/677-1200 Fax 415/677-1210

DRAWING STATUS
CONSTRUCTION DOCUMENTS

ISSUE

No.	Date	Description
1	10/22/2020	INITIAL PLAN REVIEW
2	01/08/2021	AGENCY RESUBMITTAL
3	03/22/2021	AGENCY RESUBMITTAL

If drawing is not 30" x 42" it is a reduced print

PROJECT
RESIDENTIAL CENTER, UKIAH: REPLACEMENT OF EXISTING RESIDENTIAL CENTER
440 EAST HILL ROAD
WILLITS, CALIFORNIA 95490
MENDOCINO COUNTY
CALIFORNIA CONSERVATION CORP

Supervisor | Designed | Drawn

DSA Application No.
02-118630

SHEET TITLE
FOODSERVICE
PLUMBING
ROUGH-IN PLAN

DGS Project Number 000000000001826
NMR Project Number 18-6456

Reference North: NORTH
Sheet Scale
Sheet Number
FS-113

ISSUE DATE
July 9, 2021

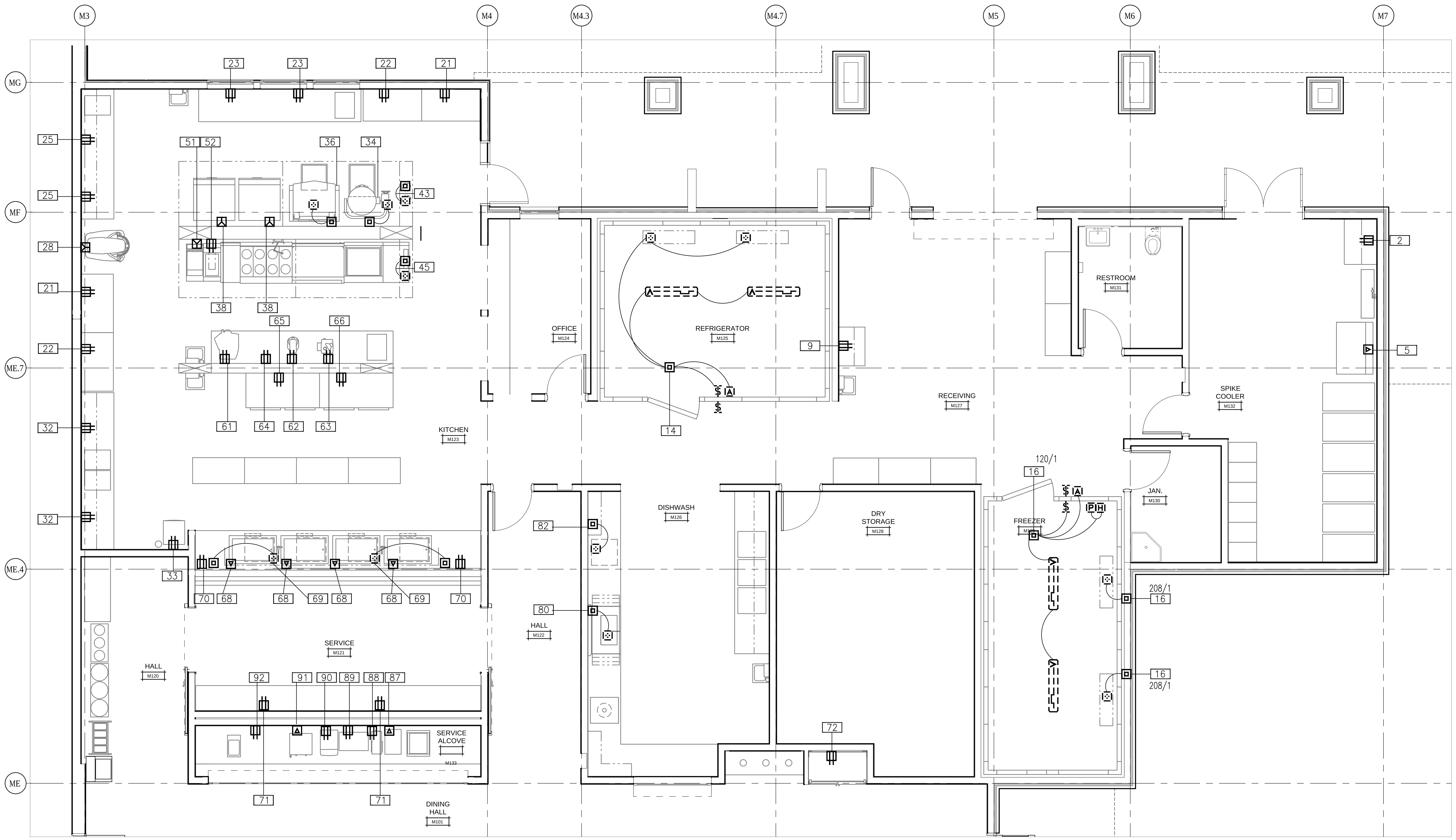

FOODSERVICE FLOOR PLAN

SCALE: 1/4" = 1'-0"

ELECTRICAL ROUGH-IN

ITEM	QTY	DESCRIPTION	CONNECTED LOAD 120/1	120/208/1	120/208/3	208/1	208/3	480/3	HT	CONNECTION TYPE C&P	RECP	HW
1	LOT	MOBILE SHELVING										
2	1	WORK TABLE	4 AMP						52"		*	
3	1	DOUBLE WALL SHELF										
4	1	WATER FILLER										
5	1	ICE MAKER W/ BIN (NUGGET)				14.2 AMP			90"	*	*	
6	LOT	COOLERS										
7	LOT	TOTE STORAGE										
8	5	MOBILE WORK TABLES										
9	1	RECEIVING TABLE	4 AMP						52"		*	
10	1	DOUBLE WALL SHELF										
11	5	HANDSINK/SIDESPLASH/EYE WASH										
12	1	FLOOR TROUGH/GRATE										
13	LOT	SHELVING										
14	1	WALK-IN COOLER	20A CKT						FA			*
15	11	PAN RACK CART										
16	1	WALK-IN FREEZER	20A CKT			12.8 AMP			FA			*
17	LOT	SHELVING										
18	LOT	MOBILE SHELVING										
19	1	CAN RACK										
20		NOT USED										
21	2	4 HALF DR REACH IN REFRIG	5.4 AMP						92"		*	
22	2	4-HALF DR REACH IN FREEZER	9.6 AMP						92"		*	
23	1	WORK TABLE WITH SINK	4 AMP						52"		*	
24	LOT	TRASH CONTAINER										
25	1	WORK TABLE WITH SINK	4 AMP						52"		*	
26	3	INGREDIENT BIN										
27	1	DOUBLE WALL SHELF										
28	1	60 QUART MIXER					5.9 AMP		32"	*	*	
29		NOT USED										
30		NOT USED										
31	1	DOUBLE WALL SHELF										
32	1	WORK TABLE WITH SINKS	4 AMP						52"		*	
33	1	ICE MACHINE/BIN	14.2 AMP						84"	*	*	
34	1	40 GALLON TILT KETTLE						21.7 AMP	32"			*
35	1	FLOOR TROUGH/GRATE										
36	1	40 GALLON TILT SKILLET						22 AMP	32"	*	*	
37	1	FLOOR TROUGH/GRATE										
38	2	2-DECK CONVECTION OVEN					68.7 AMP		32"	*	*	
39		NOT USED										
40		NOT USED										
41	1	EXHAUST HOOD (TYPE-I)										
42	1	EXHAUST HOOD (TYPE-I)										
43	1	FIRE SUPPRESSION SYSTEM	20A CKT									
44	1	COOKLINE UTILITY WALL										
45	1	VFD HOOD CONTROL PANEL	20A CKT						FA			*
46	1	EXHAUST HOOD (TYPE-I)										
47	1	EXHAUST HOOD (TYPE-I)										
48	1	HOOD DISPLAY PANEL										
49	1	UTILITY WALL/PASS SHELF										
50		NOT USED										
51	1	FRYER/FILTER					48 AMP		32"	*	*	
52	1	FRYER DUMP STATION	6.3 AMP						32"	*	*	
53	1	SPREADER										
54	1	OPEN BURNER RANGE										
55	1	FILL FAUCET										
56	1	GRIDDLE/OVEN										
57	1	BROILER										

ELECTRICAL ROUGH-IN

ITEM	QTY	DESCRIPTION	CONNECTED LOAD 120/1	120/208/1	120/208/3	208/1	208/3	480/3	HT	CONNECTION TYPE C&P	RECP	HW
58	1	SPREADER										
59		NOT USED										
60		NOT USED										
61	1	AUTOMATIC SLICER	5.6 AMP						52"		*	
62	1	20 QUART MIXER				5 AMP			32"	*	*	
63	1	FOOD PROCESSOR	7 AMP						48"		*	
64	1	WORK TABLE WITH SINK	4 AMP						52"		*	
65	1	ROLL-IN HEATED CABINET				15.5 AMP				*	*	
66	1	ROLL-IN REFRIGERATOR	11.4 AMP							*	*	
67	4	MOBILE WORK TABLES										
68	4	HOT / COLD WELL		12 AMP					STUB		*	
69	1	FOOD SHIELD W/ LED & HEAT	9.54 AMP						STUB			*
70	1	SERVING COUNTER	4 AMP						STUB		*	
71	1	SERVING COUNTER	4 AMP						STUB		*	
72	1	GRAB N GO REFRIGERATOR	6.3 AMP						82"		*	
73	2	FILL FAUCET										
74	4	MOBILE DRY RACKS										
75	1	WALL SHELF/UTENSIL RACK										
76	1	POT SINK										
77	1	HOSE REEL/VACUUM BREAKER										
78	1	SOILED DISHTABLE										
79	1	VENT DUCT										
80	1	DISHMACHINE (HIGH CHAMBER)						23.2 AMP	72"			*
81	1	VENT DUCT										
82	1	BOOSTER HEATER						28.5 AMP	24"			*
83	1	CLEAN DISHTABLE										
84	1	GLASS RACK SHELF										
85	1	GLASS RACK SHELF										
86	1	GLASS RACK LEVELER										
87	1	JUICE DISPENSER		8 AMP					46"		*	
88	1	ICED TEA BREWER	12 AMP						48"		*	
89	1	MILK DISPENSER	1.9 AMP						24"		*	
90	1	WATER / ICE DISPENSER	11 AMP						24"		*	
91	1	COFFEE BREWER		12 AMP					48"		*	
92	1	BEVERAGE COUNTER										
93	LOT	TRASH CONTAINER										
94	1	FILL SINK										
95	1	BEVERAGE COUNTER										
96	1	WATER DISPENSING SYSTEM	15 AMP						24"	*	*	
97		NOT USED										
98		NOT USED										
99		NOT USED										
100	1	REFRIGERATION SYSTEM				30 AMP			ROOF			*
101	1	TRAY DISPENSER										
102	1	UTENSIL DISPENSER										
103	1	PLATE DISPENSER										
104	1	BOWL DISPENSER										
105	1	STAGING TABLE										

ABBREVIATIONS:

C&P	CORD AND PLUG	STUB	UTILITY UP FROM FLOOR
RECP	RECEPTACLE	DC	DROP CORD WITH RECEPTACLE
HW	HARDWIRE		
HT	HEIGHT		
FA	FROM ABOVE		

SCHEDULE / DRAWING NOTES:
CONNECTED LOAD = EACH CONNECTION SHOWN ON DRAWING
CONNECTION TYPES PROVIDED BY ELECTRICAL DIVISION

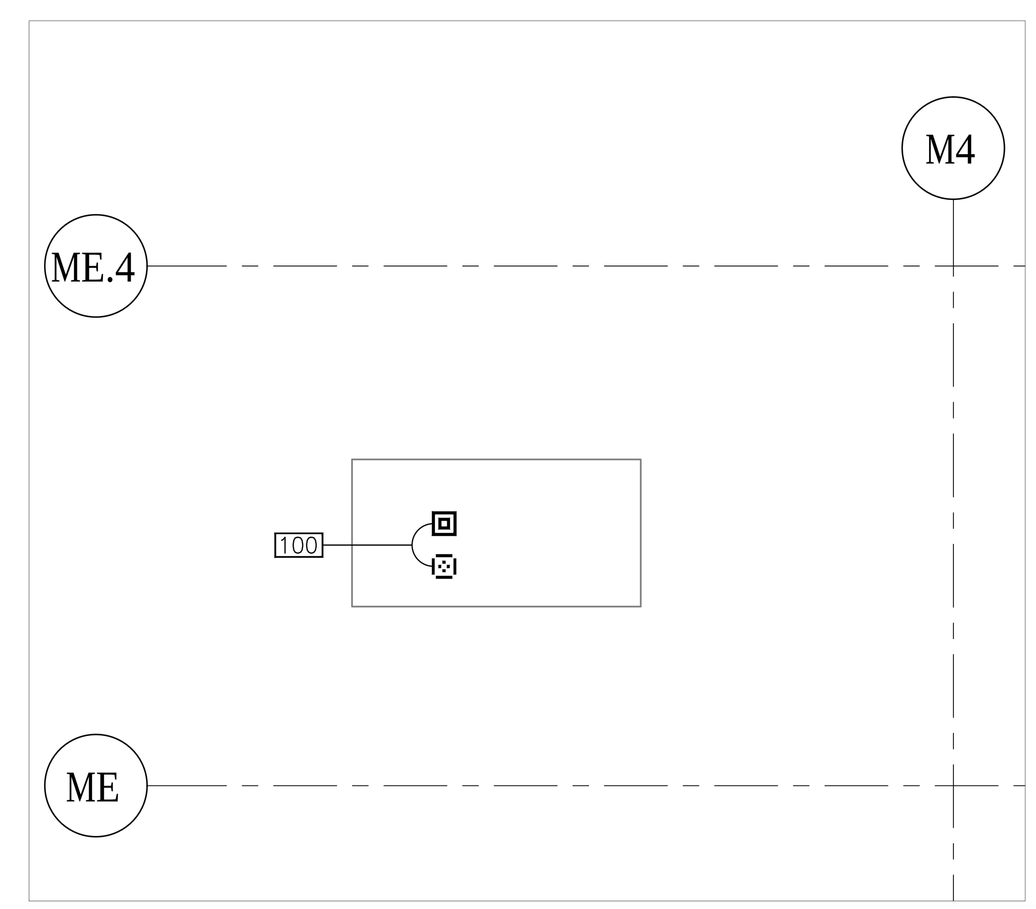

ROOF MOUNT REFRIGERATION SYSTEM

SCALE: 1/4" = 1'-0"

NOTES:

ELECTRICAL CONTRACTOR TO PROVIDE:

A. WORK AS DESCRIBED IN CONTRACT DOCUMENTS AND SUPPLEMENTAL REQUIREMENTS PER FOODSERVICE EQUIPMENT SECTION.

B. ROUGH-IN AND FINAL CONNECTION TO ALL FOODSERVICE EQUIPMENT AS INDICATED ON DRAWINGS AND IN ELECTRICAL ROUGH-IN SCHEDULE.

C. ALL ELECTRICAL WORK FOR FABRICATED FOODSERVICE EQUIPMENT SHALL BE COMPLETELY WIRED BY ELECTRICAL CONTRACTOR.

D. ALL JUNCTION-BOXES, ELECTRICAL OUTLETS, COVER PLATES, SWITCHES NOT BUILT INTO FIXTURES OR EQUIPMENT.

E. DISHROOMS TO HAVE VAPOR PROOF COMPONENTS.

F. SHUNT TRIP CIRCUIT BREAKERS FOR ALL FOODSERVICE EQUIPMENT BELOW EXHAUST HOODS.

G. BEVERAGE LINE/REFRIGERATION LINE CONDUITS (SEE BUILDING CONDITIONS PLAN).

H. SEE EQUIPMENT PLAN FOR ADDITIONAL HEALTH DEPARTMENT NOTES/REQUIREMENTS.

INTERCONNECTION BETWEEN:

A. ALL COOLER/FREEZER COMPONENTS AND INTERCONNECTING WIRING AS SHOWN ON DRAWINGS.

B. REMOTE REFRIGERATION SYSTEM AND FREEZER BLOWER COIL.

C. VENTILATOR AND CONTROL PANEL.

D. FOODSERVICE EQUIPMENT WITH SWITCH ACTIVATION.

E. FIRE PROTECTION SYSTEM AND BUILDING LIFE SAFETY.

SYMBOLS:

- JUNCTION BOX ROUGH-IN
- JUNCTION BOX CONNECTION PROVIDED IN EQUIPMENT
- DUPLEX OUTLET ROUGH-IN
- DUPLEX OUTLET PROVIDED IN EQUIPMENT
- SINGLE PHASE POWER OUTLET ROUGH-IN
- SINGLE PHASE POWER OUTLET PROVIDED IN EQUIPMENT
- THREE PHASE POWER OUTLET ROUGH-IN
- THREE PHASE POWER OUTLET PROVIDED IN EQUIPMENT
- CONDUIT STUB-UP ROUGH-IN
- CIRCUIT PANEL PROVIDED IN EQUIPMENT
- LIGHT/POWER SWITCH ROUGH-IN
- LIGHT/POWER SWITCH PROVIDED IN EQUIPMENT
- COLD STORAGE ROOM LED LIGHT STRIP PROVIDED BY FSEC/INSTALLED BY EC
- COLD STORAGE ROOM HEATED PRESSURE RELIEF PORT PROVIDED IN EQUIPMENT
- COLD STORAGE ROOM DOOR HEATER PROVIDED IN EQUIPMENT
- COLD STORAGE ROOM TEMPERATURE ALARM PROVIDED IN EQUIPMENT
- FIRE PROTECTION PULL BOX - OCTAGONAL BOX 48" AFF WITH CONDUIT TO CEILING

HEALTH DEPT. COUNTER CONSTRUCTION

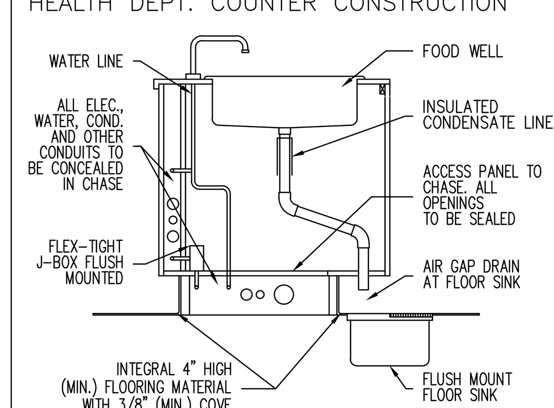

TYPICAL HEALTH DEPARTMENT REQUIREMENTS:
DO NOT RUN CONDUIT, PIPES, ETC. ON HORIZONTAL SURFACES IN CABINETS. INSTALL ALL LINES VERTICAL. STUD ALL LINES AT FIXTURE

HOOD CONTROL PANEL

FIELD WIRING BY ELECTRICAL DIVISION
REFER TO SHOP DRAWINGS FOR CONNECTION LOCATIONS, QUANTITIES AND ADDITIONAL INFORMATION

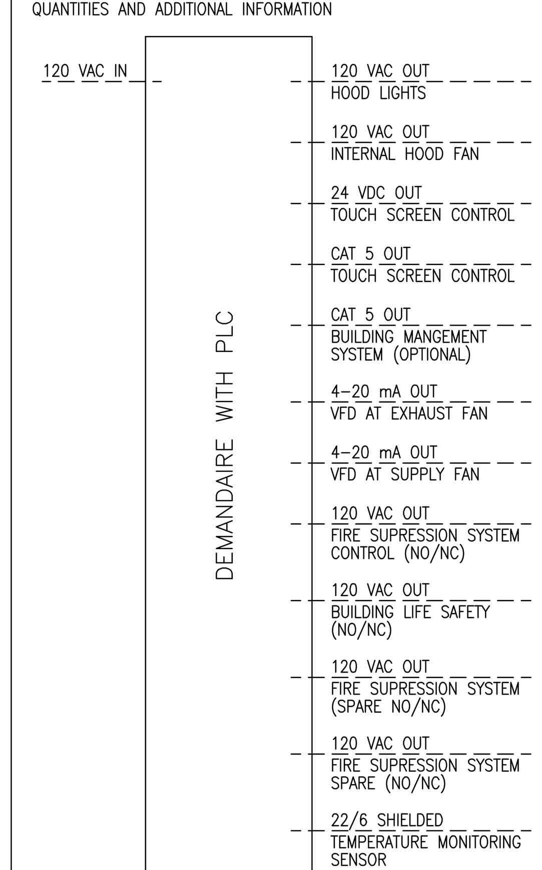

IDENTIFICATION STAMP
DIV. OF THE STATE ARCHITECT
APP: 02-118630 INC:
REVIEWED FOR
SS ☐ FLS ☐ ACS ☑
DATE: 04/13/2021

OFFICE OF THE STATE FIRE MARSHAL
APPROVED FIRE AND PANIC ONLY
Approval of this plan does not authorize or approve any omission or deviation from applicable regulations. Final approval is subject to field inspection. One set of approved plans shall be available on the project site at all times.
PERMIT NO.: 20-N-2332-CP
REVIEWED BY: LITO CATAYLO, OSFM
DATE: 4/1/2021

DGS GENERAL SERVICES
Department of General Services
State of California
Real Estate Services Division
Project Management & Development Branch
707 Third Street, Suite 4-105
West Sacramento, California 95605

NICHOLS MELBURG & ROSSETTO
ARCHITECTS + ENGINEERS
300 Knollcrest Drive
Redding, CA. 96002
(530) 222-3300 (530) 222-3538 FAX
http://www.nmrdesign.com

Copyright © 2021
All ideas, designs, arrangements and plans indicated or represented by this drawing are owned by, and the property of, NICHOLS, MELBURG and ROSSETTO and were created, evolved and developed for use on, and in conjunction with, the specified project. None of such ideas, designs, arrangements or plans shall be used by, or disclosed to any person, firm or corporation for any purpose whatsoever without the written permission of NICHOLS, MELBURG and ROSSETTO.

LICENSE STAMPS
LICENSED ARCHITECT KYLE MATTI C-27504 REN. 10/31/21 STATE OF CALIFORNIA

CONSULTANT
The Marshall Associates, Inc.
Foodservice & Laundry Consultants/Designers
3000 Danville Blvd Suite F-344 Alamo, CA 94507
2129 4th Street Santa Rosa, CA 95404
415/677-1200 Fax 415/677-1210

DRAWING STATUS
CONSTRUCTION DOCUMENTS

ISSUE

No.	Date	Description
1	10/22/2020	INITIAL PLAN REVIEW
2	01/08/2021	AGENCY RESUBMITTAL
3	03/22/2021	AGENCY RESUBMITTAL

If drawing is not 30" x 42" it is a reduced print

PROJECT
RESIDENTIAL CENTER, UKIAH: REPLACEMENT OF EXISTING RESIDENTIAL CENTER
440 EAST HILL ROAD
WILLITS, CALIFORNIA 95490
MENDOCINO COUNTY
CALIFORNIA CONSERVATION CORP

Supervisor | Designed | Drawn

DSA Application No.
02-118630

SHEET TITLE
FOODSERVICE
ELECTRICAL ROUGH-IN PLAN

DGS Project Number: 000000000001826
NMR Project Number: 18-6456
Reference North
Sheet Scale
Sheet Number: FS-114

ISSUE DATE
July 9, 2021

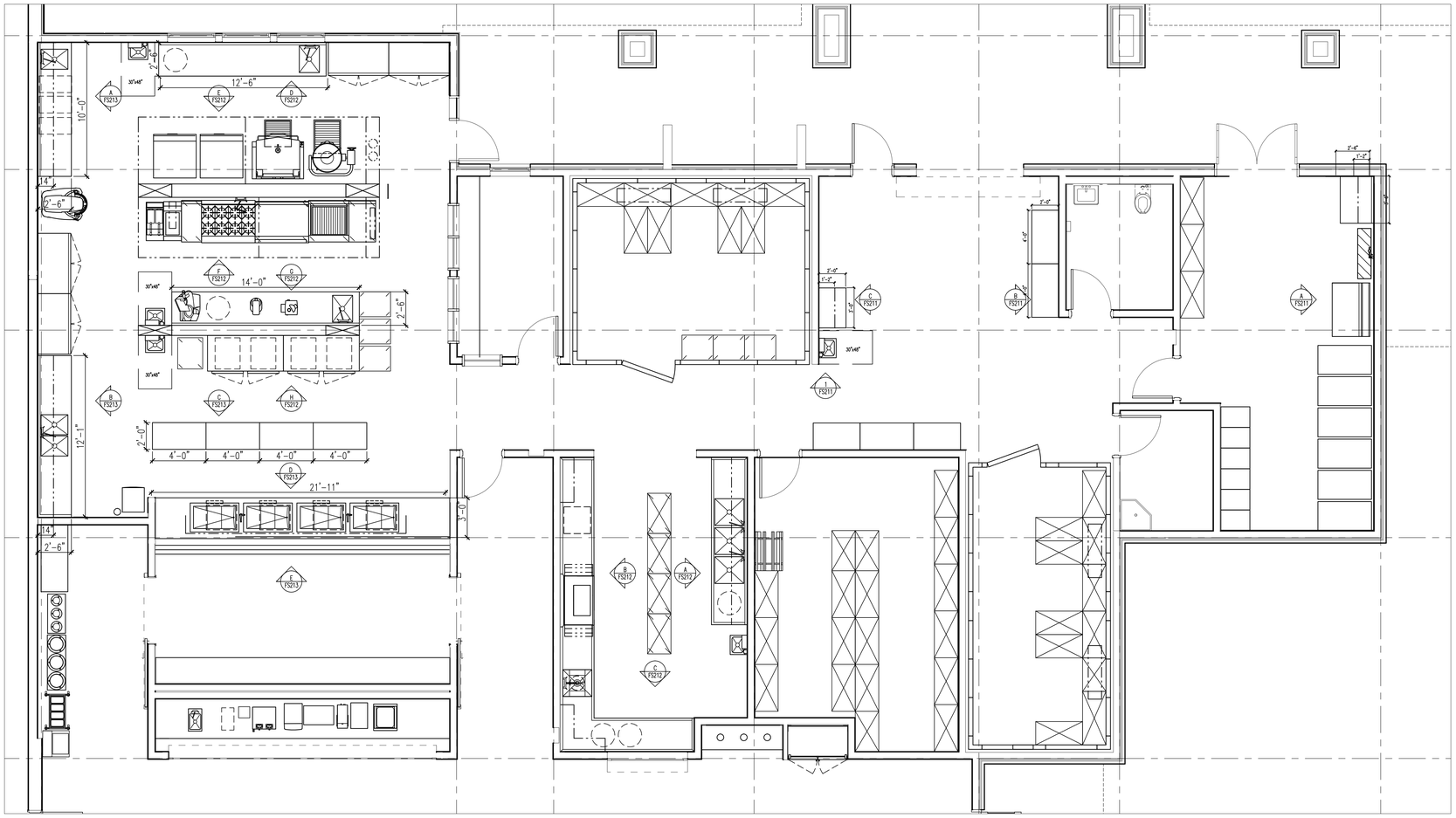

1 LEVEL 1 - FOODSERVICE
SCALE: 1/4" = 1'-0"

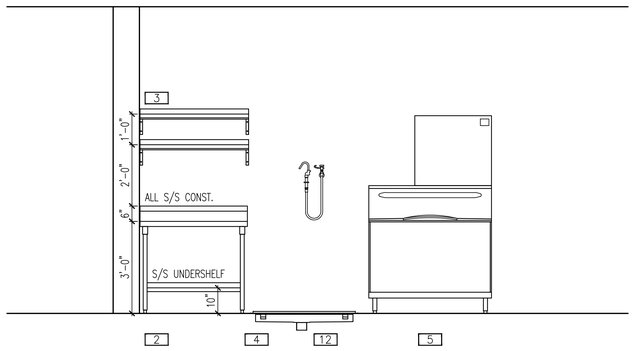

A ELEVATION
SCALE: 1/2" = 1'-0"

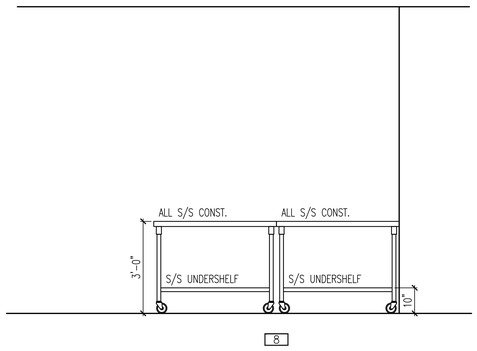

B ELEVATION
SCALE: 1/2" = 1'-0"

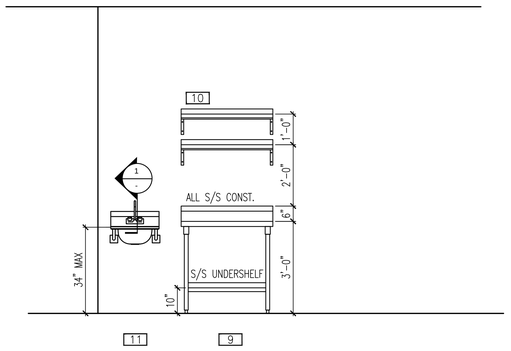

C ELEVATION
SCALE: 1/2" = 1'-0"

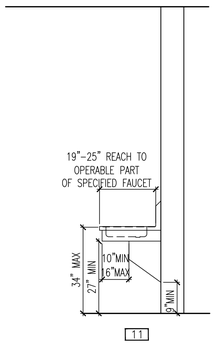

SECTION 1
SCALE: 1/2" = 1'-0"

SHEET NOTES

ALL CUSTOM FABRICATED EQUIPMENT CONSTRUCTION TO MEET NSF, ETL SANITATION OR UL SANITATION STANDARDS.

FIELD VERIFY ALL DIMENSIONS PRIOR TO FABRICATION.

VERIFY MATERIALS, FINISHES, HARDWARE WITH INTERIOR DESIGN ARCHITECT.

COORDINATE INSTALLATION OF ALL DROP-IN EQUIPMENT.

COORDINATE WORK BETWEEN GENERAL CONTRACTOR AND TRADES.

PROVIDE SHOP DRAWINGS PER CONTRACT DOCUMENTS AND SHOW ALL MATERIALS, FINISHES, AND HARDWARE FOR VERIFICATION BY ARCHITECT, INTERIOR ARCHITECT AND/OR CONSULTANT.

ALL CUT-OUTS IN SOLID SURFACE MATERIAL TO BE RADIUSED, PROVIDED WITH AIR GAP, S/S INSETS AND/OR INSULATED TO PREVENT THE MATERIAL FROM CRACKING DUE TO INSTALLATION OF HEATED/REFRIGERATED BUILT-IN FOODSERVICE EQUIPMENT. (VERIFY REQUIREMENTS WITH MANUFACTURER.)

INSTALLATION OF LAMINATE TO BE PER MANUFACTURERS INSTRUCTIONS. WATER BASE ADHESIVES ONLY.

SIZE LOUVERS AND PROVIDE ADEQUATE VENTILATION FOR BUILT-IN SELF-CONTAINED REFRIGERATED EQUIPMENT PER MANUFACTURERS RECOMMENDATIONS.

NOTCH CURBS AT FLOOR SINKS, FIELD VERIFY LOCATIONS.

SEE ARCHITECTURAL DRAWINGS FOR SOLID SURFACE MATERIAL (SSM) TOP FINISH. (3CM MINIMUM THICKNESS)

IDENTIFICATION STAMP
DIV. OF THE STATE ARCHITECT
APP: 02-118630 INC:
REVIEWED FOR
SS ☐ FLS ☐ ACS ☑
DATE: 04/13/2021

OFFICE OF THE STATE FIRE MARSHAL
APPROVED FIRE AND PANIC ONLY
Approval of this plan does not authorize or approve any omission or deviation from applicable regulations. Final approval is subject to field inspection. One set of approved plans shall be available on the project site at all times.
PERMIT NO: 28 N 2332-CP
REVIEWED BY: LEO CATAYLO, OSFM
DATE: 4 / /2021

GENERAL SERVICES
Department of General Services
State of California
Real Estate Services Division
Project Management & Development Branch
707 Third Street, Suite 4-105
West Sacramento, California 95605

NICHOLS MELBURG & ROSSETTO
ARCHITECTS + ENGINEERS
300 Knollcrest Drive
Redding, CA. 96002
(530) 222-3300 (530) 222-3538 FAX
http://www.nmrdesign.com

Copyright © 2021
All ideas, designs, arrangements and plans indicated or represented by this drawing are owned by, and the property of, NICHOLS, MELBURG and ROSSETTO and were created, evolved and developed for use on, and in conjunction with, the specified project. None of such ideas, designs, arrangements or plans shall be used by, or disclosed to any person, firm or corporation for any purpose whatsoever without the written permission of NICHOLS, MELBURG and ROSSETTO.

LICENSE STAMPS

LICENSED ARCHITECT
KYLE MATTY
C-27504
EXP. 10/31/21
STATE OF CALIFORNIA

CONSULTANT

The Marshall Associates, Inc.
Foodservice & Laundry Consultants/Designers
3000 Danville Blvd Suite F-344 Alamo, CA 94507
2129 4th Street Santa Rosa, CA 95404
415/677-1200 Fax 415/677-1210

DRAWING STATUS
CONSTRUCTION DOCUMENTS

ISSUE

No.	Date	Description
1	10/22/2020	INITIAL PLAN REVIEW
2	01/08/2021	AGENCY RESUBMITTAL
3	03/22/2021	AGENCY RESUBMITTAL

If drawing is not 30" x 42" it is a reduced print

PROJECT
RESIDENTIAL CENTER, UKIAH: REPLACEMENT OF EXISTING RESIDENTIAL CENTER
440 EAST HILL ROAD
WILLITS, CALIFORNIA 95490
MENDOCINO COUNTY
CALIFORNIA CONSERVATION CORP

Supervisor	Designed	Drawn

DSA Application No.
02-118630

SHEET TITLE
FOODSERVICE
ELEVATIONS

DGS Project Number
000000000001826
NMR Project Number
18-6456

Reference North
NORTH
Sheet Scale
Sheet Number
FS-211

ISSUE DATE
July 9, 2021

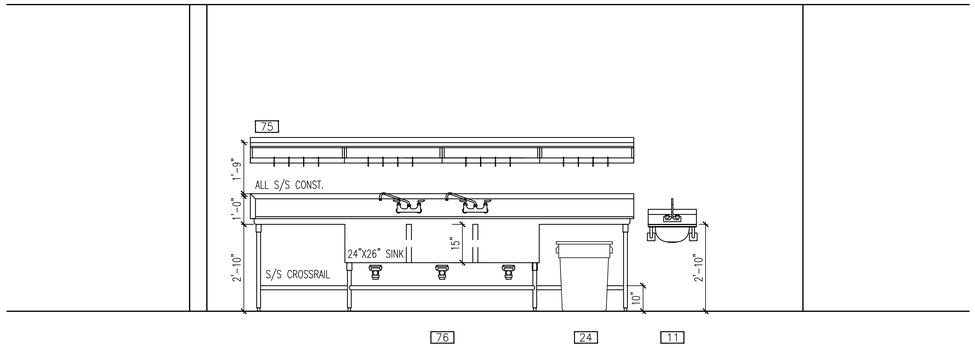

A ELEVATION
SCALE: 1/2" = 1'-0"

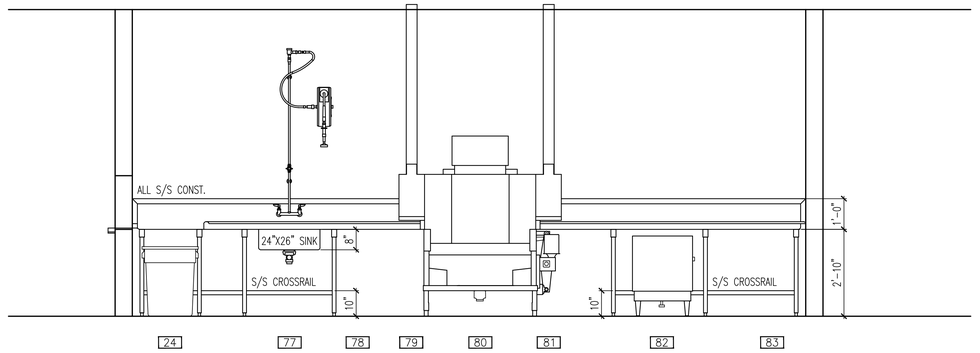

B ELEVATION
SCALE: 1/2" = 1'-0"

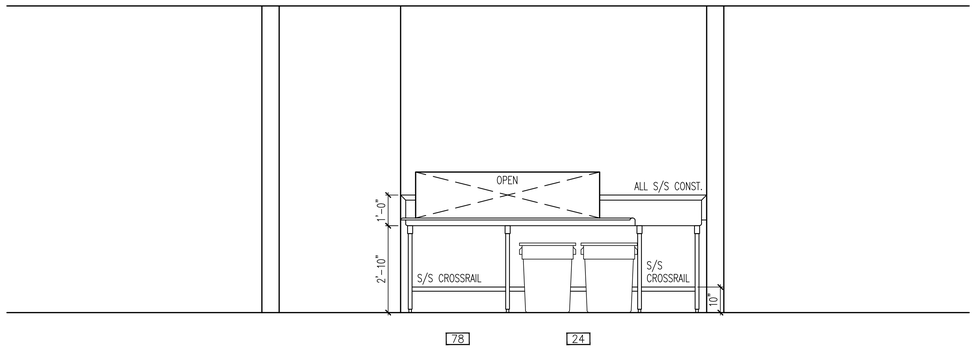

C ELEVATION
SCALE: 1/2" = 1'-0"

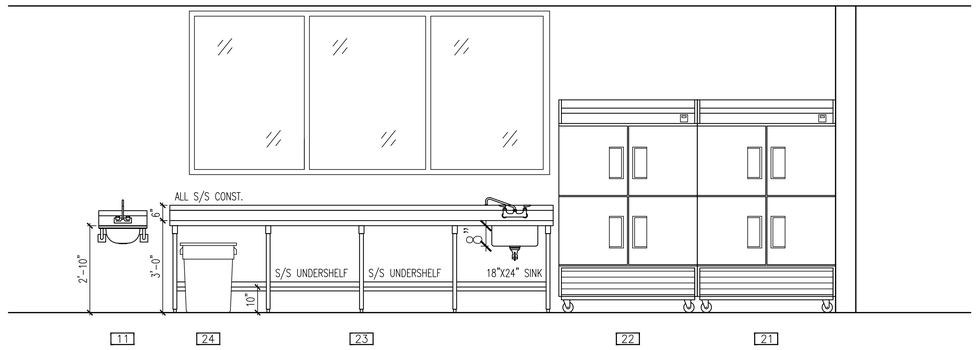

D ELEVATION
SCALE: 1/2" = 1'-0"

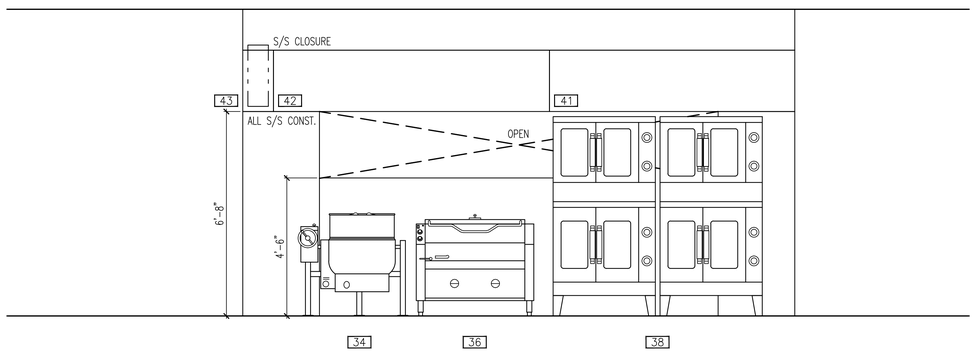

E ELEVATION
SCALE: 1/2" = 1'-0"

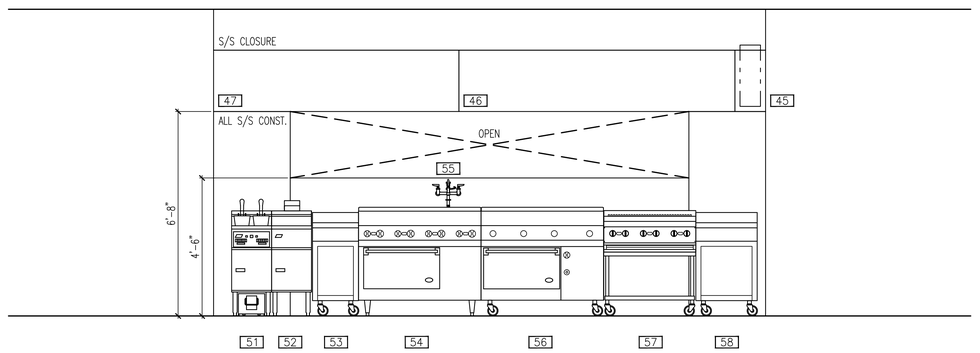

F ELEVATION
SCALE: 1/2" = 1'-0"

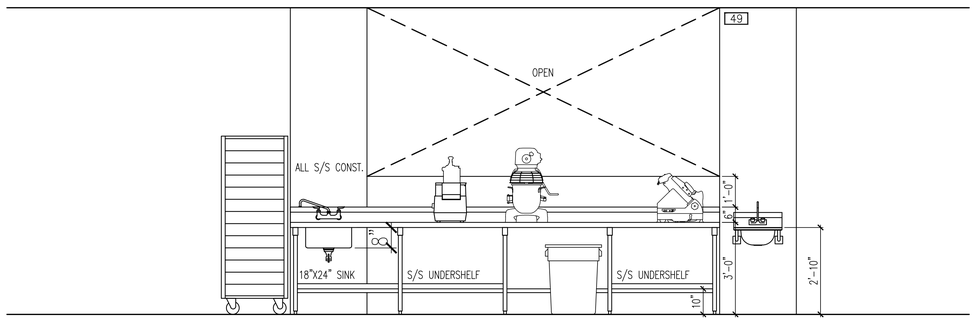

G ELEVATION
SCALE: 1/2" = 1'-0"

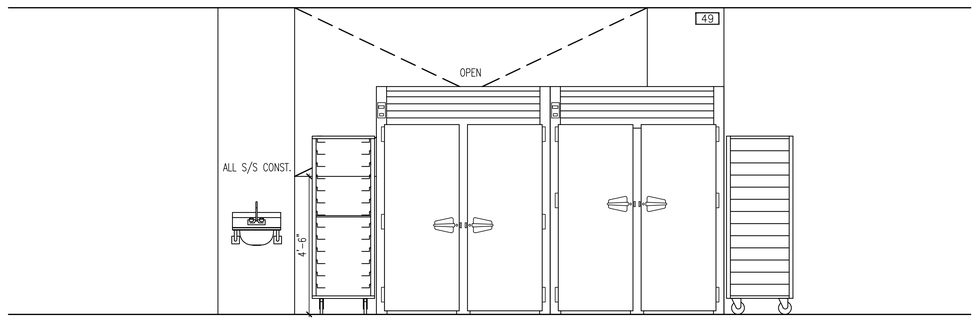

H ELEVATION
SCALE: 1/2" = 1'-0"

SHEET NOTES

ALL CUSTOM FABRICATED EQUIPMENT CONSTRUCTION TO MEET NSF, ETL SANITATION OR UL SANITATION STANDARDS.

FIELD VERIFY ALL DIMENSIONS PRIOR TO FABRICATION.

VERIFY MATERIALS, FINISHES, HARDWARE WITH INTERIOR DESIGN ARCHITECT.

COORDINATE INSTALLATION OF ALL DROP-IN EQUIPMENT.

COORDINATE WORK BETWEEN GENERAL CONTRACTOR AND TRADES.

PROVIDE SHOP DRAWINGS PER CONTRACT DOCUMENTS AND SHOW ALL MATERIALS, FINISHES, AND HARDWARE FOR VERIFICATION BY ARCHITECT, INTERIOR ARCHITECT AND/OR CONSULTANT.

ALL CUT-OUTS IN SOLID SURFACE MATERIAL TO BE RADIUSED, PROVIDED WITH AIR GAP, S/S INSETS AND/OR INSULATED TO PREVENT THE MATERIAL FROM CRACKING DUE TO INSTALLATION OF HEATED/REFRIGERATED BUILT-IN FOODSERVICE EQUIPMENT. (VERIFY REQUIREMENTS WITH MANUFACTURER.)

INSTALLATION OF LAMINATE TO BE PER MANUFACTURERS INSTRUCTIONS. WATER BASE ADHESIVES ONLY.

SIZE LOUVERS AND PROVIDE ADEQUATE VENTILATION FOR BUILT-IN SELF-CONTAINED REFRIGERATED EQUIPMENT PER MANUFACTURERS RECOMMENDATIONS.

NOTCH CURBS AT FLOOR SINKS, FIELD VERIFY LOCATIONS.

SEE ARCHITECTURAL DRAWINGS FOR SOLID SURFACE MATERIAL (SSM) TOP FINISH. (3CM MINIMUM THICKNESS)

IDENTIFICATION STAMP
DIV. OF THE STATE ARCHITECT
APP: 02-118630 INC:
REVIEWED FOR
SS ☐ FLS ☐ ACS ☑
DATE: 04/13/2021

OFFICE OF THE STATE FIRE MARSHAL
APPROVED FIRE AND PANIC ONLY
Approval of this plan does not authorize or approve any omission or deviation from applicable regulations. Final approval is subject to field inspection. One set of approved plans shall be available on the project site at all times.
PERMIT NO. 28 N 2332-CP
REVIEWED BY: LEO CATAYLO, OSFM
DATE: 4/ /2021

GENERAL SERVICES
Department of General Services
State of California
Real Estate Services Division
Project Management & Development Branch
707 Third Street, Suite 4-105
West Sacramento, California 95605

NICHOLS MELBURG & ROSSETTO
ARCHITECTS + ENGINEERS
300 Knollcrest Drive
Redding, CA. 96002
(530) 222-3300 (530) 222-3538 FAX
http://www.nmrdesign.com

Copyright © 2021
All ideas, designs, arrangements and plans indicated or represented by this drawing are owned by, and the property of, NICHOLS, MELBURG and ROSSETTO and were created, evolved and developed for use on, and in conjunction with, the specified project. None of such ideas, designs, arrangements or plans shall be used by, or disclosed to any person, firm or corporation for any purpose whatsoever without the written permission of NICHOLS, MELBURG and ROSSETTO.

LICENSE STAMPS

LICENSED ARCHITECT
KYLE MATTI
C-27504
REN. 10/31/21
STATE OF CALIFORNIA

CONSULTANT

The Marshall Associates, Inc.
Foodservice & Laundry Consultants/Designers
3000 Danville Blvd Suite F-344 Alamo, CA 94507
2129 4th Street Santa Rosa, CA 95404
415/677-1200 Fax 415/677-1210

DRAWING STATUS
CONSTRUCTION DOCUMENTS

ISSUE

No.	Date	Description
1	10/22/2020	INITIAL PLAN REVIEW
2	01/08/2021	AGENCY RESUBMITTAL
3	03/22/2021	AGENCY RESUBMITTAL

If drawing is not 30" x 42" it is a reduced print

PROJECT
RESIDENTIAL CENTER, UKIAH: REPLACEMENT OF EXISTING RESIDENTIAL CENTER
440 EAST HILL ROAD
WILLITS, CALIFORNIA 95490
MENDOCINO COUNTY
CALIFORNIA CONSERVATION CORP

Supervisor	Designed	Drawn

DSA Application No.
02-118630

SHEET TITLE
FOODSERVICE
ELEVATIONS

DGS Project Number
000000000001826

NMR Project Number
18-6456

Reference North
NORTH

Sheet Scale

Sheet Number
FS-212

ISSUE DATE
July 9, 2021

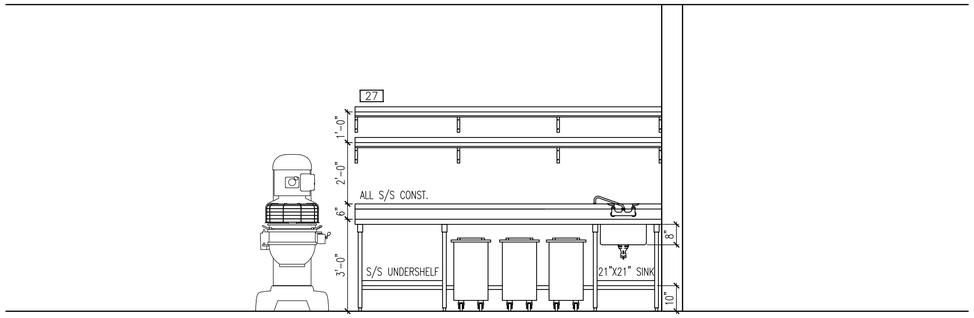

A ELEVATION
SCALE: 1/2" = 1'-0"

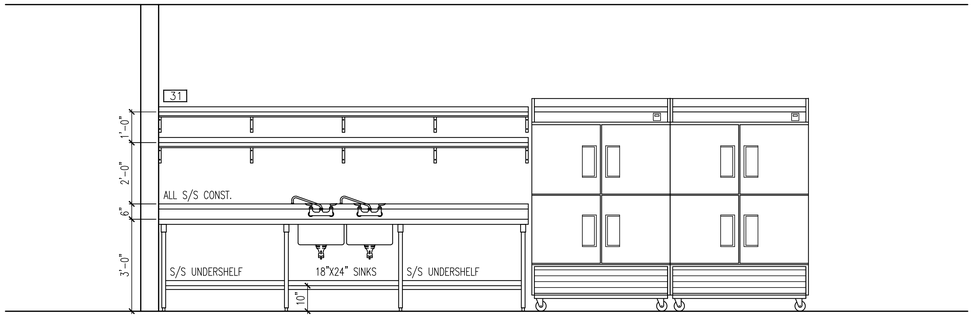

B ELEVATION
SCALE: 1/2" = 1'-0"

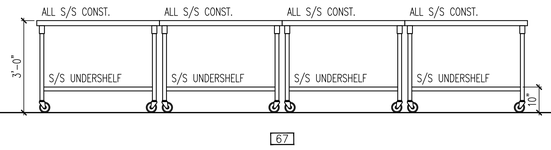

C ELEVATION
SCALE: 1/2" = 1'-0"

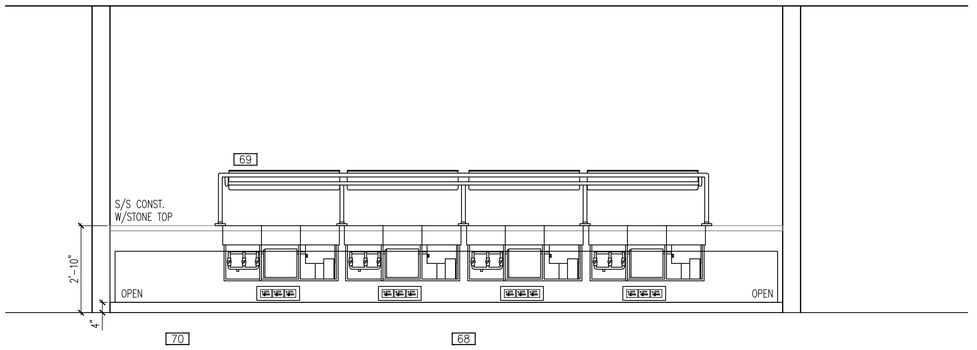

D ELEVATION
SCALE: 1/2" = 1'-0"

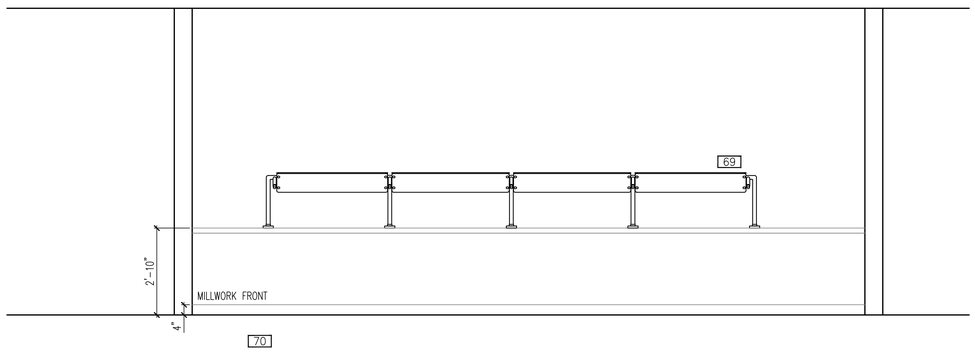

E ELEVATION
SCALE: 1/2" = 1'-0"

SHEET NOTES

ALL CUSTOM FABRICATED EQUIPMENT CONSTRUCTION TO MEET NSF, ETL SANITATION OR UL SANITATION STANDARDS.

FIELD VERIFY ALL DIMENSIONS PRIOR TO FABRICATION.

VERIFY MATERIALS, FINISHES, HARDWARE WITH INTERIOR DESIGN ARCHITECT.

COORDINATE INSTALLATION OF ALL DROP-IN EQUIPMENT.

COORDINATE WORK BETWEEN GENERAL CONTRACTOR AND TRADES.

PROVIDE SHOP DRAWINGS PER CONTRACT DOCUMENTS AND SHOW ALL MATERIALS, FINISHES, AND HARDWARE FOR VERIFICATION BY ARCHITECT, INTERIOR ARCHITECT AND/OR CONSULTANT.

ALL CUT-OUTS IN SOLID SURFACE MATERIAL TO BE RADIUSED, PROVIDED WITH AIR GAP, S/S INSETS AND/OR INSULATED TO PREVENT THE MATERIAL FROM CRACKING DUE TO INSTALLATION OF HEATED/REFRIGERATED BUILT-IN FOODSERVICE EQUIPMENT. (VERIFY REQUIREMENTS WITH MANUFACTURER.)

INSTALLATION OF LAMINATE TO BE PER MANUFACTURERS INSTRUCTIONS. WATER BASE ADHESIVES ONLY.

SIZE LOUVERS AND PROVIDE ADEQUATE VENTILATION FOR BUILT-IN SELF-CONTAINED REFRIGERATED EQUIPMENT PER MANUFACTURERS RECOMMENDATIONS.

NOTCH CURBS AT FLOOR SINKS, FIELD VERIFY LOCATIONS.

SEE ARCHITECTURAL DRAWINGS FOR SOLID SURFACE MATERIAL (SSM) TOP FINISH. (3CM MINIMUM THICKNESS)

IDENTIFICATION STAMP
DIV. OF THE STATE ARCHITECT
APP: 02-118630 INC:
REVIEWED FOR
SS ☐ FLS ☐ ACS ☑
DATE: 04/13/2021

OFFICE OF THE STATE FIRE MARSHAL
APPROVED FIRE AND PANIC ONLY
Approval of this plan does not authorize or approve any omission or deviation from applicable regulations. Final approval is subject to field inspection. One set of approved plans shall be available on the project site at all times.
PERMIT NO: 28 N 2332 CP
REVIEWED BY: LEO CATAYLO, OSFM
DATE: 4 / /2021

GENERAL SERVICES
Department of General Services
State of California
Real Estate Services Division
Project Management & Development Branch
707 Third Street, Suite 4-105
West Sacramento, California 95605

NICHOLS MELBURG & ROSSETTO
ARCHITECTS + ENGINEERS
300 Knollcrest Drive
Redding, CA. 96002
(530) 222-3300 (530) 222-3538 FAX
http://www.nmrdesign.com

Copyright © 2021
All ideas, designs, arrangements and plans indicated or represented by this drawing are owned by, and the property of, NICHOLS, MELBURG and ROSSETTO and were created, evolved and developed for use on, and in conjunction with, the specified project. None of such ideas, designs, arrangements or plans shall be used by, or disclosed to any person, firm or corporation for any purpose whatsoever without the written permission of NICHOLS, MELBURG and ROSSETTO.

LICENSE STAMPS

LICENSED ARCHITECT
KYLE MATTY
C-27504
REN. 10/31/21
STATE OF CALIFORNIA

CONSULTANT

The Marshall Associates, Inc.
Foodservice & Laundry Consultants/Designers
3000 Danville Blvd Suite F-344 Alamo, CA 94507
2129 4th Street Santa Rosa, CA 95404
415/677-1200 Fax 415/677-1210

DRAWING STATUS
CONSTRUCTION DOCUMENTS

ISSUE

No.	Date	Description
1	10/22/2020	INITIAL PLAN REVIEW
2	01/08/2021	AGENCY RESUBMITTAL
3	03/22/2021	AGENCY RESUBMITTAL

If drawing is not 30" x 42" it is a reduced print

PROJECT
RESIDENTIAL CENTER, UKIAH: REPLACEMENT OF EXISTING RESIDENTIAL CENTER
440 EAST HILL ROAD
WILLITS, CALIFORNIA 95490
MENDOCINO COUNTY
CALIFORNIA CONSERVATION CORP

Supervisor	Designed	Drawn

DSA Application No.
02-118630

SHEET TITLE
FOODSERVICE
ELEVATIONS

DGS Project Number
000000000001826

NMR Project Number
18-6456

Reference North
NORTH

Sheet Scale

Sheet Number
FS-213

ISSUE DATE
July 9, 2021

IDENTIFICATION STAMP
DIV. OF THE STATE ARCHITECT
APP: 02-118630 INC:
REVIEWED FOR
SS ☐ FLS ☐ ACS ☑
DATE: 04/13/2021

OFFICE OF THE STATE FIRE MARSHAL
APPROVED FIRE AND PANIC ONLY
Approval of this plan does not authorize or approve any omission or deviation from applicable regulations. Final approval is subject to field inspection. One set of approved plans shall be available on the project site at all times.
PERMIT NO.: 20-N-2332-CP
REVIEWED BY: LITO CATAYLO, OSFM
DATE: 3/ 1 /2021

A1 HANGER BRACKET

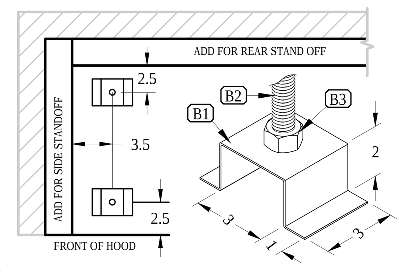

B1 STAINLESS STEEL HANGER BRACKET
B2 ⅜" THREADED ROD
B3 ⅜" HEAVY DUTY LOCK NUTS, (1) ABOVE (1) BELOW
(THREADED ROD & LOCK NUTS NOT PROVIDED)

A2 EXTRACTAIRE HVC

STAINLESS STEEL

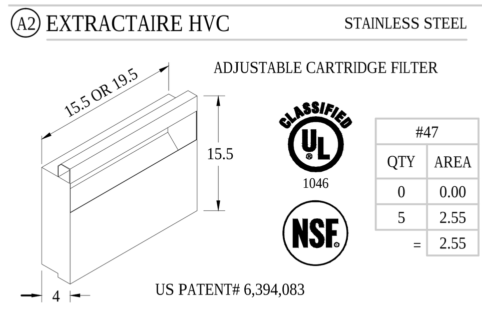

#47	
QTY	AREA
0	0.00
5	2.55
=	2.55

US PATENT# 6,394,083

FILTER:			#41		#42		#46	
H x L	EFF AREA		QTY	AREA	QTY	AREA	QTY	AREA
1616	0.40	X	0	0.00	2	0.80	2	0.80
1620	0.51	X	5	2.55	3	1.53	3	1.53
TOTAL EFF AREA =				2.55	=	2.33	=	2.33

HOO E CFM TOTAL EFF AREA = F M
OPERATING RANGE OF THE FILTER (250 TO 1400 FPM)

A3 HOOD CANOPY LIGHTING FIXTURE

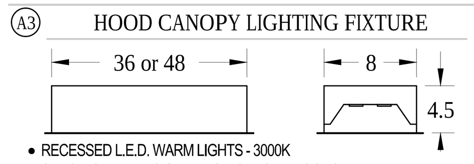

- RECESSED L.E.D. WARM LIGHTS - 3000K
- SPECIFICALLY DESIGNED FOR CANOPY HOODS
- TEMPERATURE RATED TO 75°C (167°F)
- MEETS NFPA CODE 96 & NEC 410
- TOTAL LUMENS OUTPUT = 4228 (36"), 4925 (48")
- 43 WATTS (36"), 53 WATTS (48")

A8 LISTED ACCESS PANEL

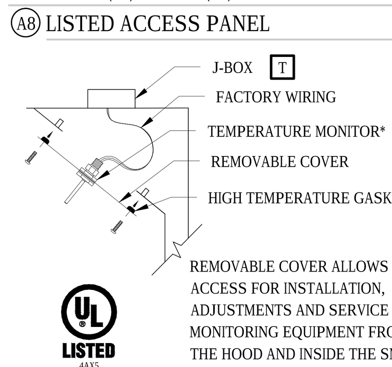

REMOVABLE COVER ALLOWS EASY ACCESS FOR INSTALLATION, ADJUSTMENTS AND SERVICE OF MONITORING EQUIPMENT FROM UNDER THE HOOD AND INSIDE THE SMARTAIRE PLENUM.

*FOR TEMPERATURE MONITOR WIRING SEE DETAIL E2

A5 DUCT CONNECTION DETAIL

EXHAUST DUCT COLLAR DETAIL

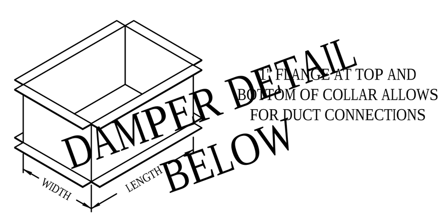

BALANCEAIRE INCLUDED

INTERNALLY ADJUSTABLE VARIABLE VOLUME DAMPER

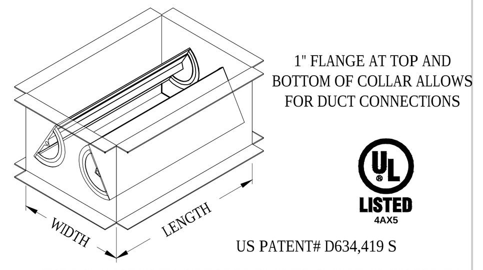

US PATENT# D634,419 S

THE BALANCEAIRE'S OPPOSED BLADES CAN BE ADJUSTED TO VARYING POSITIONS FROM 100% OPEN TO 95% CLOSED TO INCREASE OR DECREASE THE AMOUNT OF RESISTANCE IN THE HOODS EXHAUST COLLAR. THE EXHAUST FAN MUST BE SIZED TO ACCOUNT FOR THE BALANCEAIRE'S ADDED RESISTANCE.

EXHAUST COLLAR APPROVAL

OPTIONS

☐ SHIP COLLAR LOOSE (THE PURCHASER ACCEPTS THE OBLIGATION AND COST OF CUTTING/WELDING COLLAR)

☐ WELD COLLAR TO HOOD (DIMENSIONS REQUIRED)

DRAWING APPROVAL

THIS DRAWING MUST BE REVIEWED, SIGNED & RETURNED TO STREIVOR AIR SYSTEMS PRIOR TO THE START OF FABRICATION.

VERIFY THE FOLLOWING:
1. ALL DIMENSIONAL INFORMATION, MOUNTING LOCATIONS & CLEARANCES.
2. THE LOCATION & TYPE OF COOKING EQUIPMENT.

APPROVED FOR FABRICATION

☐ APPROVED ☐ APPROVED AS NOTED

☐ REVISE & RESUBMIT

APPROVED BY DATE

NOTE TO REVIEWER:
ANY CHANGES IN COOKING EQUIPMENT SUCH AS EQUIPMENT POSITION, TYPE AND/OR INCREASE IN ENERGY OUTPUT MAY AFFECT EXHAUST AIRFLOW. STREIVOR AIR SYSTEMS MUST BE NOTIFIED OF ANY CHANGES THAT OCCUR PRIOR TO FABRICATION, A RE-ENGINEERING OF THE EXHAUST AIRFLOW MAY BE REQUIRED.

HOOD SCHEDULE

HOOD SCHEDULE						EXHAUST			DIST. FROM COOKING SURFACE TO LOWER EDGE OF HOOD. (UL1)		MINIMUM OVERHANG OPEN SIDES (UL2)	(UL3)	EQUIP. DUTY TEMPERATURE (UL4)
NO.	MODEL	L	W	H	WEIGHT	SPEC. CFM	SP	CFM/FT	MIN.	MAX.	SIDE	FRONT	MAX.
41	SAWCBD 1056024	105	60	24	656	1531	0.55	175	36	48	6	6	450
42	SAWCBD 996024	99	60	24	1210	1633	0.77	198	36	48	6	6	600
46	SAWCBD 996024	99	60	24	1210	1782	0.77	216	36	48	6	6	600
47	SAWCBD 1056024	105	60	24	656	1531	0.55	175	36	48	6	6	450

1. GREATER EXHAUST AND/OR LESSER SUPPLY AIR FLOW RATES MAY BE REQUIRED FOR COMPLETE VAPOR AND SMOKE REMOVAL IN SPECIFIC INSTALLATION(S).
2. THE EXHAUST FAN MUST BE OPERATED WHENEVER THE COOKING EQUIPMENT IS TURNED ON. (NFPA SECTION 11.1.1)

HOOD CANOPY MATERIAL: ALL 304 SERIES STAINLESS STEEL

HOOD LEGEND

1. ALL WELDED ENCLOSURE
2. 16 GA. SIDES, REMAINDER OF HOOD TO BE NO LESS THAN 18 GA.
3. PITCHED GREASE DRIP TRAY
4. ENCLOSED METAL CONTAINER
5. CONTAINMENT PANEL: LIGHT DUTY
6. ENCLOSURE PANEL: INCLUDED
7. UTILITY CABINET (REQUIRES 36" OF OPEN SPACE IN FRONT OF THE DOOR)
8. 12" HOOD OVERHANG IS RECOMMENDED FOR ALL HEAVY DUTY COOKING APPLIANCES
9. 8" ROUND INTERNAL HOOD FAN (IHF) COLLAR WITH UL LISTED FIRE DAMPER 6"X6"
12. DEMANDAIRE CONTROL PANEL
13. INTERNAL HOOD FAN W/SPEED CONTROL
14. SEE ELECTRICAL SCHEDULE - CONSULT FACTORY FOR ALTERNATE INPUT POWER LOCATION(S)

ELECTRICAL SCHEDULE

SEE DEMANDAIRE DRAWINGS

CIRCUIT	DESCRIPTION	VOLTS/PHASE	AMPS	FEED FROM

CB: CIRCUIT BREAKER BY ELECTRICAL CONTRACTOR.

IF AN ELECTRICAL CONTROL PANEL FOR THE HOODS IS INCLUDED, THE ABOVE SCHEDULE IS NOT VALID. REFER TO DEMANDAIRE DRAWINGS.

ELECTRICAL LEGEND

- STREIVOR FACTORY WIRING
- FIELD WIRING BY OTHERS
- LJ HOOD CANOPY LIGHT(S) JUNCTION BOX
- TJ TEMPERATURE MONITOR(S) JUNCTION BOX
- FJ INTERNAL HOOD FAN(S) JUNCTION BOX

NOTE: FACTORY INSTALLATION OF JUNCTION BOXES MAY DIFFER FROM LOCATION ON DRAWINGS

E1 HOOD CANOPY LIGHT FIXTURE WIRING DETAIL

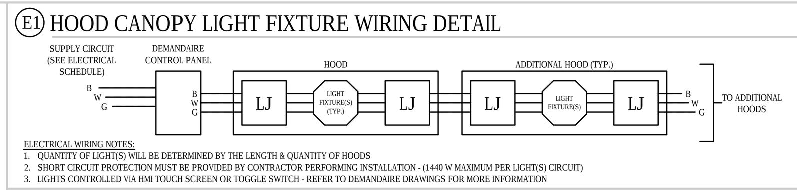

ELECTRICAL WIRING NOTES:
1. QUANTITY OF LIGHT(S) WILL BE DETERMINED BY THE LENGTH & QUANTITY OF HOODS
2. SHORT CIRCUIT PROTECTION MUST BE PROVIDED BY CONTRACTOR PERFORMING INSTALLATION - (1440 W MAXIMUM PER LIGHT(S) CIRCUIT)
3. LIGHTS CONTROLLED VIA HMI TOUCH SCREEN OR TOGGLE SWITCH - REFER TO DEMANDAIRE DRAWINGS FOR MORE INFORMATION

E3 INTERNAL HOOD FAN (IHF) WIRING DETAIL

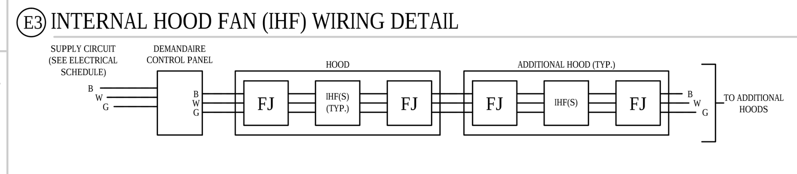

ELECTRICAL WIRING NOTES:
1. QUANTITY OF INTERNAL HOOD FANS WILL BE DETERMINED BY THE LENGTH & QUANTITY OF HOODS
2. DEMANDAIRE CONTROL PANEL TO ELECTRICALLY INTERLOCK ASSOCIATED EXHAUST FAN(S), MAKE UP AIR FAN(S) AND INTERNAL HOOD FAN(S) (IHF)
3. MAXIMUM OF TWO INTERNAL HOOD FANS PER HOOD
4. SHORT CIRCUIT PROTECTION MUST BE PROVIDED BY CONTRACTOR PERFORMING INSTALLATION
5. REFER TO DEMANDAIRE DRAWINGS FOR MORE INFORMATION
6. DEMANDAIRE CONTROL PANEL CONTROLS INTERNAL HOOD FANS TO COMPLY WITH NFPA 96 SECTION 8.3.2

NFPA 96 SECTION 8.3.2:
WHEN ITS FIRE-EXTINGUISHING SYSTEM DISCHARGES, MAKEUP AIR SUPPLIED INTERNALLY TO A HOOD SHALL BE SHUT OFF

E2 RESISTANCE TEMP. DETECTOR (RTD) WIRING DETAIL

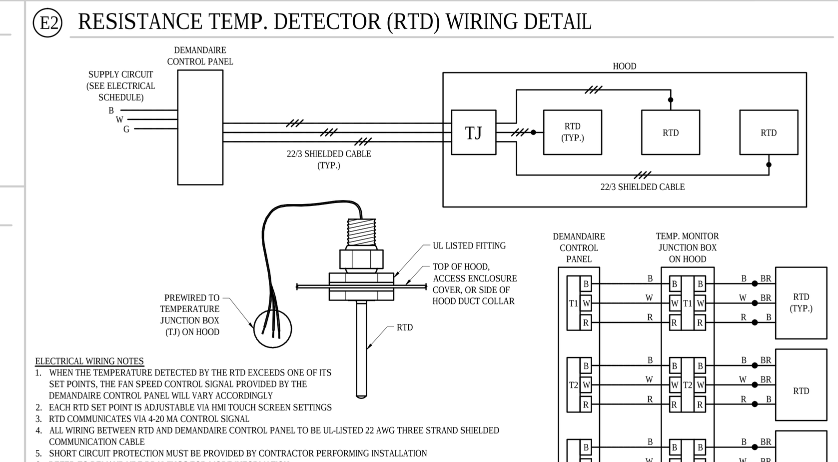

ELECTRICAL WIRING NOTES
1. WHEN THE TEMPERATURE DETECTED BY THE RTD EXCEEDS ONE OF ITS SET POINTS, THE FAN SPEED CONTROL SIGNAL PROVIDED BY THE DEMANDAIRE CONTROL PANEL WILL VARY ACCORDINGLY
2. EACH RTD SET POINT IS ADJUSTABLE VIA HMI TOUCH SCREEN SETTINGS
3. RTD COMMUNICATES VIA 4-20 MA CONTROL SIGNAL
4. ALL WIRING BETWEEN RTD AND DEMANDAIRE CONTROL PANEL TO BE UL-LISTED 22 AWG THREE STRAND SHIELDED COMMUNICATION CABLE
5. SHORT CIRCUIT PROTECTION MUST BE PROVIDED BY CONTRACTOR PERFORMING INSTALLATION
6. REFER TO DEMANDAIRE DRAWINGS FOR MORE INFORMATION

NFPA 96 SECTION 8.2.3.3:
THE EXHAUST FAN SHALL BE PROVIDED WITH A MEANS SO THAT THE FAN IS ACTIVATED WHEN ANY APPLIANCE UNDER THE HOOD IN TURNED ON

SA OPTIONS FOR SUPPLYING (CLEAN SOURCE) MAKE UP AIR TO THE SMARTAIRE INTERNAL HOOD FANS (IHF)

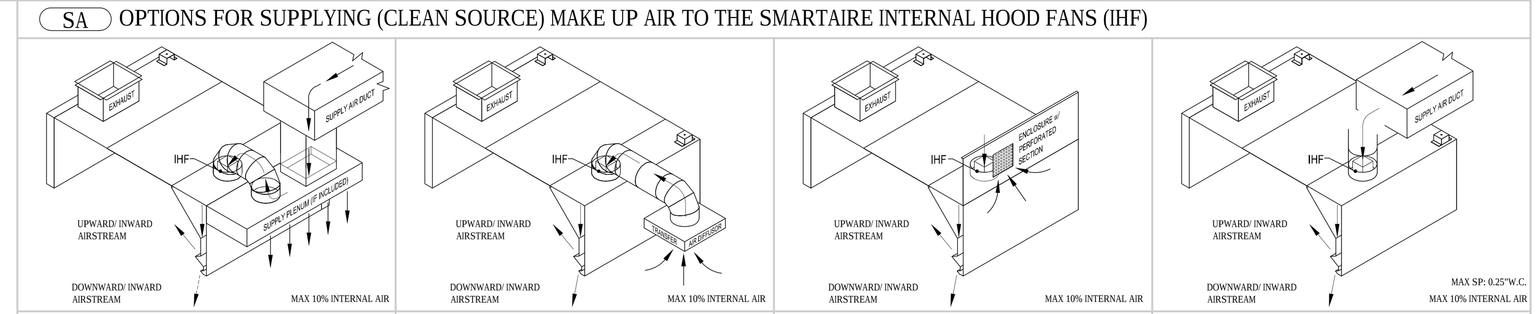

A: TRANSFER AIR - SUPPLY PLENUM — DIRECTLY CONNECTING THE STREIVOR PROVIDED 8" ROUND IHF TRANSFER AIR DUCT TO THE HOOD'S SUPPLY PLENUM (FOR HOOD WITH SUPPLY PLENUM)

B: TRANSFER AIR — DIRECTLY OR INDIRECTLY CONNECTING A TRANSFER AIR SOURCE TO THE SMARTAIRE INTERNAL HOOD FAN COLLAR(S)

C: INDIRECT AIR — THE INTERNAL HOOD FAN INDIRECTLY DRAWS AIR FROM AN ADJOINING SPACE THROUGH A PERFORATED ENCLOSURE

D: DIRECT DUCT — DIRECTLY CONNECTING A FORCED SUPPLY AIR SOURCE TO THE SMARTAIRE INTERNAL HOOD FAN COLLAR(S)

STREIVOR'S SMARTAIRE HOOD MODEL (SAWCBD) HAS INTERNAL HOOD FANS MOUNTED INSIDE OF THE HOOD'S SMARTAIRE PLENUM. THE INTERNAL HOOD FANS HAVE THE CAPABILITY OF OVERCOMING STATIC PRESSURES OF UP TO 0.25 IN. WATER COLUMN AND CAN PULL TRANSFER AIR INTO THE HOOD'S SMARTAIRE PLENUM.

THE SMARTAIRE TECHNOLOGY INCLUDES TWO LOW-VOLUME, HIGH-VELOCITY AIR STREAMS INCORPORATED INTO THE LOWER FRONT EDGE OF THE HOOD. THE AIR STREAMS RUN CONTINUOUSLY ACROSS THE INNER FRONT EDGE OF THE HOOD. ONE AIR STREAM IS DIRECTED IN AN UPWARD, INWARD DIRECTION AND ONE AIR STREAM IS DIRECTED IN A DOWNWARD, INWARD DIRECTION. THE SMARTAIRE TECHNOLOGY SIGNIFICANTLY IMPROVES THE HOOD'S ABILITY TO CAPTURE AND CONTAIN THE THERMAL PLUME AND COOKING EFFLUENTS GENERATED FROM COOKING APPLIANCES UNDER THE HOOD. THE AIR STREAMS ARE LOCATED WITHIN THE HOOD'S CANOPY AND ARE THEREFORE CONSIDERED TO BE REPLACEMENT/COMPENSATING AIR. EFFORTS SHOULD BE TAKEN TO ENSURE THAT UNCLEAN TRANSFER AIR (SUCH AS ATTIC AIR) IS NOT USED FOR THE SMARTAIRE TECHNOLOGY AIR STREAMS.

ASHRAE/ANSI 90.1 AND CALIFORNIA TITLE24 ENERGY CODES LIMIT THE AMOUNT OF REPLACEMENT AIR THAT CAN BE INTRODUCED INTO A HOOD TO 10% OF THE HOOD EXHAUST AIRFLOW RATE. SMARTAIRE HOODS ARE DESIGNED TO COMPLY WITH THESE ENERGY CODES.

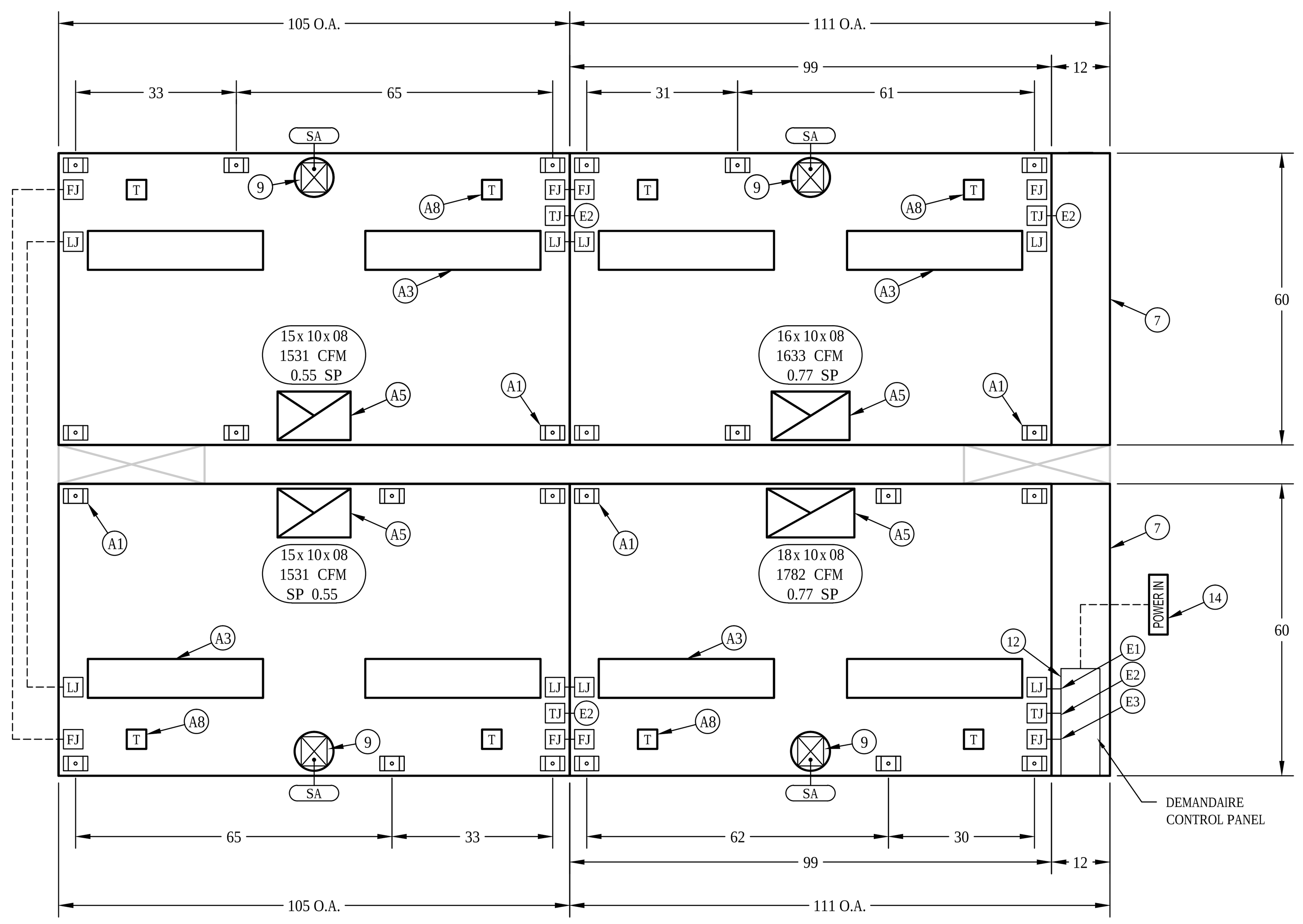

HOOD #41
PLAN VIEW

HOOD #42
PLAN VIEW

HOOD #47
PLAN VIEW

HOOD #46
PLAN VIEW

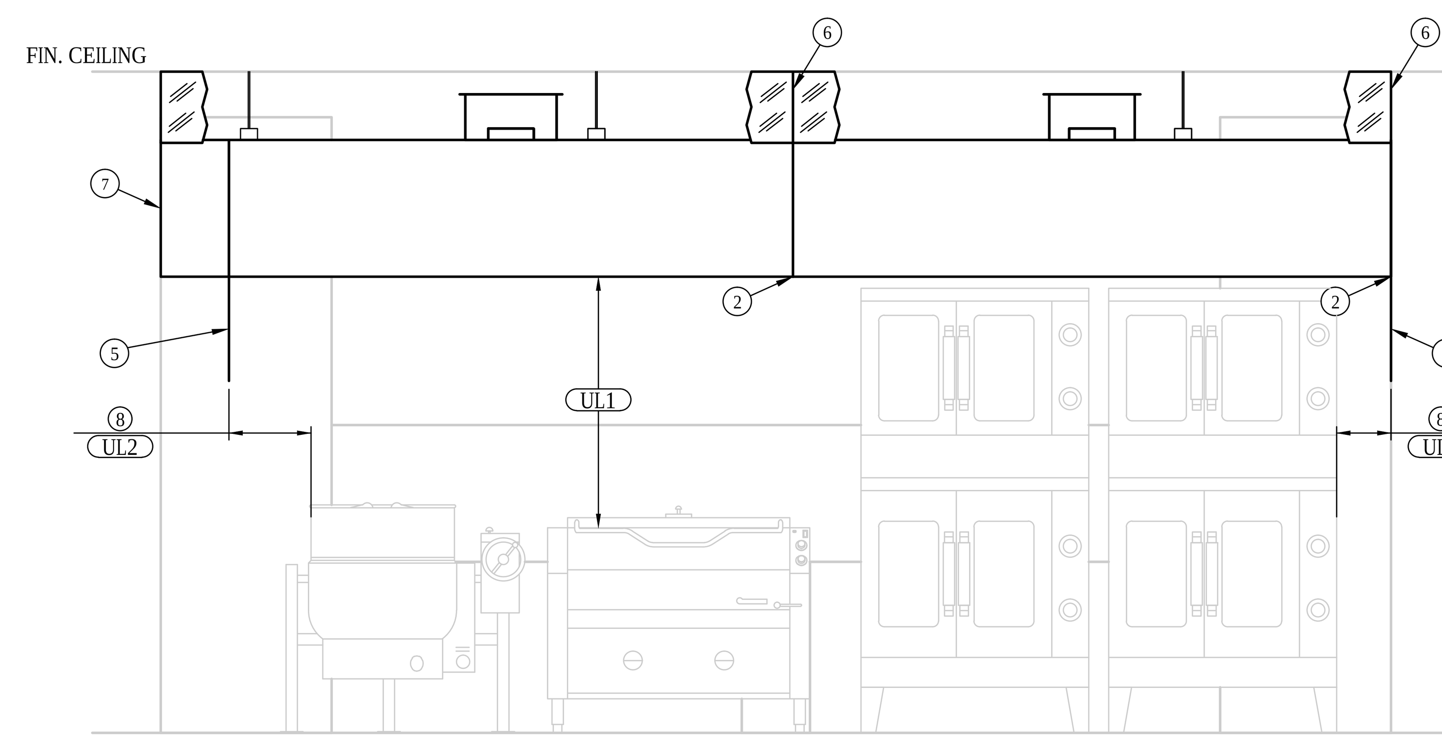

HOOD #42
ELEVATION VIEW

HOOD #41
ELEVATION VIEW

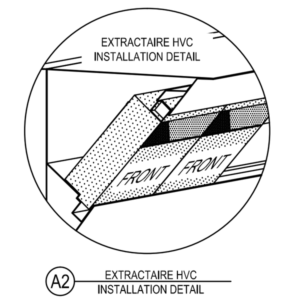

A2 EXTRACTAIRE HVC INSTALLATION DETAIL

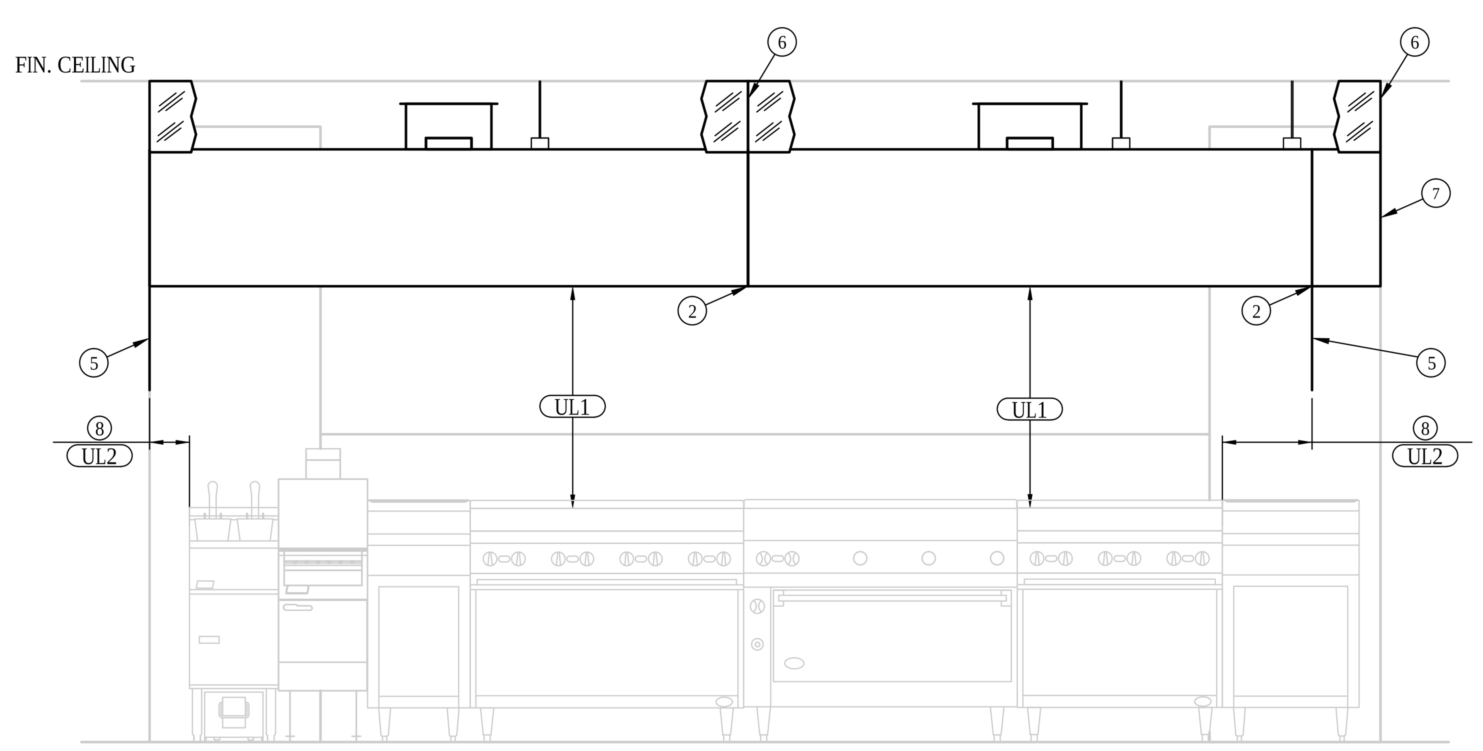

HOOD #47
ELEVATION VIEW

HOOD #46
ELEVATION VIEW

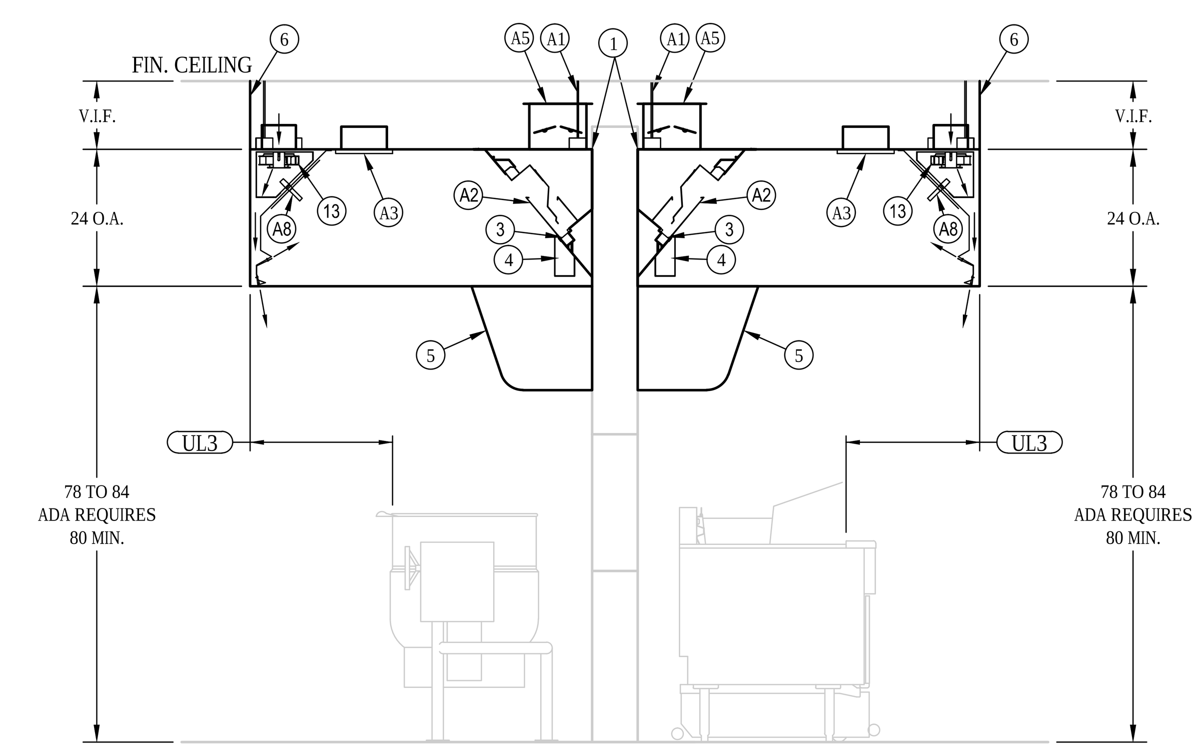

HOODS #41 & 42
SECTION VIEW

HOODs #46 & 47
SECTION VIEW

GENERAL NOTES:

NOTES TO ARCHITECT AND/OR CONTRACTOR: STREIVOR, INC. (STREIVOR AIR SYSTEMS, STREIVOR STAINLESS) IS A SPECIALIST IN THE LAYOUT AND DESIGN OF KITCHEN VENTILATION SYSTEMS, AND IN NO WAY PURPORTS TO BE ARCHITECTS OR ENGINEERS.

THIS PLAN IS SUBMITTED FOR THE CONVENIENCE OF THE ARCHITECT AND/OR CONTRACTOR AND IS DONE FROM AVAILABLE ARCHITECTURAL INFORMATION. ALL MEASUREMENTS ARE SUBJECT TO PHYSICAL VERIFICATION AND ANY DEVIATIONS OR DISCREPANCIES SHALL BE DIRECTED TO THE ATTENTION OF STREIVOR, INC. IN WRITING.

STREIVOR, INC. ACCEPTS NO RESPONSIBILITY FOR WORK DONE BY SAID ARCHITECT OR GENERAL CONTRACTOR OR THEIR REPRESENTATIVES OR SUBCONTRACTORS, AND WILL NOT STAND ANY EXPENSE FOR CHANGES MADE NECESSARY DUE TO LOCAL BUILDING CODES, ORDINANCES, STRUCTURAL CONDITIONS, OR BY ANY SUBSTITUTIONS OR CHANGES IN EQUIPMENT SHOWN ON THIS PLAN.

ANY ERRORS, AMBIGUITIES OR OMISSIONS IN THIS PLAN OR SPECIFICATIONS SHALL BE REPORTED TO STREIVOR, INC. FOR CORRECTIONS BEFORE ANY OF THE WORK IS STARTED. UNLESS EXPRESSLY STIPULATED, NO ADDITIONAL ALLOWANCE WILL BE MADE IN FAVOR OF THE OWNER OR CONTRACTOR; BY VIRTUE OF ERROR, AMBIGUITY OR OMISSION WHICH SHOULD HAVE BEEN DISCOVERED DURING THE PREPARATION OF BID ESTIMATES, AND DIRECTED TO THE ATTENTION OF STREIVOR, INC. IN A TIMELY MANNER.

PRE - INSTALLATION

OBTAIN, READ AND UNDERSTAND STREIVOR'S HOOD INSTALLATION, OPERATION AND MAINTENANCE MANUAL PRIOR TO INSTALLATION, STARTUP OR BALANCING.

INSTALLATION

ALL INSTALLATION, STARTUP AND BALANCING MUST BE PERFORMED BY QUALIFIED PERSONS AND IN ACCORDANCE WITH ALL APPLICABLE PREVAILING CODES AND STANDARDS.

STANDARD NFPA 96 HOOD CLEARANCES
0" TO NON-COMBUSTIBLE MATERIALS
3" TO LIMITED-COMBUSTIBLE MATERIALS
18" TO COMBUSTIBLE MATERIAL

OVERHEAD CLEARANCES
10" CLEARANCE IS REQUIRED ABOVE THE HOOD

REDUCED CLEARANCES
REDUCED CLEARANCES MAY BE AVAILIABLE. CONSULT FACTORY FOR REDUCED CLEARANCE OPTIONS.

TEST AND BALANCE
THE SPECIFIED EXHAUST CFMS LISTED ON THIS DRAWING MUST BE MET DURING TEST AND BALANCE OF THE HOOD SYSTEM(S).
VARIANCE EXHAUST = -0% +10%
VARIANCE SUPPLY= +10% -0%

STREIVOR™ AIR SYSTEMS
"STRIVING FOR EXCELLENCE"
2150 KITTY HAWK ROAD, LIVERMORE, CA 94551
PHONE: (925) 960-9090 FAX:(925) 960-9055
WWW.STREIVOR.COM

PROJECT:
CCC WILLITS

---,-- -----

THE MARSHALL ASSOCIATES

HOOD #:	41, 42, 46, & 47
DATE:	01/11/2021
DRAWN BY:	JAM
CHECKED BY:	JWS
CONSULTANT:	THE MARSHALL ASSOCIATES
SCALE: (UNLESS OTHERWISE NOTED)	1/2" = 1'-0"

IF BAR DOES NOT MEASURE 1" THIS DRAWING IS NOT PLOTTED TO SCALE

△	DESCRIPTION	DATE	INT
△	---	--/--/--	---
△	---	--/--/--	---
△	---	--/--/--	---
△	---	--/--/--	---
△	---	--/--/--	---

DRAWING:
H-01
SHEET 01 OF 01

CO R HT 2021 STRE OR NC

DGS GENERAL SERVICES
Department of General Services
State of California
Real Estate Services Division
Project Management & Development Branch
707 Third Street, Suite 4-105
West Sacramento, California 95605

NICHOLS MELBURG & ROSSETTO
ARCHITECTS + ENGINEERS
300 Knollcrest Drive
Redding, CA. 96002
(530) 222-3300 (530) 222-3538 FAX
http://www.nmrdesign.com

Copyright © 2021
All ideas, designs, arrangements and plans indicated or represented by this drawing are owned by, and the property of, NICHOLS, MELBURG and ROSSETTO and were created, evolved and developed for use on, and in conjunction with, the specified project. None of such ideas, designs, arrangements or plans shall be used by, or disclosed to any person, firm or corporation for any purpose whatsoever without the written permission of NICHOLS, MELBURG and ROSSETTO.

LICENSE STAMPS

LICENSED ARCHITECT KYLE MATTI C 27504 REN. 10/31/21 STATE OF CALIFORNIA

CONSULTANT

The Marshall Associates, Inc.
Foodservice & Laundry Consultants/Designers
3000 Danville Blvd Suite F-344 Alamo, CA 94507
2129 4th Street Santa Rosa, CA 95404
415/677-1200 Fax 415/677-1210

DRAWING STATUS
CONSTRUCTION DOCUMENTS

ISSUE

No.	Date	Description
1	10/22/2020	INITIAL PLAN REVIEW
2	01/08/2021	AGENCY RESUBMITTAL
3	03/22/2021	AGENCY RESUBMITTAL

If drawing is not 30" x 42" it is a reduced print

PROJECT
RESIDENTIAL CENTER, UKIAH: REPLACEMENT OF EXISTING RESIDENTIAL CENTER
440 EAST HILL ROAD
WILLITS, CALIFORNIA 95490
MENDOCINO COUNTY
CALIFORNIA CONSERVATION CORP

Supervisor	Designed	Drawn

DSA Application No.
02-118630

SHEET TITLE
FOODSERVICE MANUFACTURER DRAWING - EXHAUST HOOD

DGS Project Number: 000000000001826
NMR Project Number: 18-6456

Reference North — NORTH
Sheet Scale
Sheet Number: FS-214

ISSUE DATE
July 9, 2021

IDENTIFICATION STAMP
DIV. OF THE STATE ARCHITECT
APP: 02-118630 INC:
REVIEWED FOR
SS ☐ FLS ☐ ACS ☑
DATE: 04/13/2021

OFFICE OF THE STATE FIRE MARSHAL
APPROVED FIRE AND PANIC ONLY
Approval of this plan does not authorize or approve any omission or deviation from applicable regulations. Final approval is subject to field inspection. One set of approved plans shall be available on the project site at all times.
PERMIT NO.: 20-N-2332-CP
REVIEWED BY: LITO CATAYLO, OSFM
DATE: 3/ 1 /2021

LISTINGS & STANDARDS

THIS WET CHEMICAL EXTINGUISHING SYSTEM IS ENGINEERED TO PROVIDE FIRE PROTECTION FOR RESTAURANT HOODS, DUCTS AND COOKING APPLIANCES, IS **UL 300** LISTED AND IS TO BE INSTALLED IN ACCORDANCE WITH THE FOLLOWING STANDARDS:

- NFPA 17A 2017 EDITION
- NFPA 10 2018 EDITION
- NFPA 96 2017 EDITION

SECTIONS & CODES

NFPA 10 2018 EDITION

(6.6.2) MAXIMUM TRAVEL DISTANCE SHALL NOT EXCEED 30 FT (9.1 M) FROM THE HAZARD TO THE EXTINGUISHER(S)

NFPA 17A 2017 EDITION

(5.2.1.10.1) EACH MANUAL ACTUATION DEVICE SHALL BE INSTALLED NO MORE THAN 48 IN. (1200 MM) AND NO LESS THAN 42 IN. (1067 MM) ABOVE THE FLOOR.

NFPA 96 2017 EDITION

(8.2.3.1) A HOOD EXHAUST FAN(S) SHALL CONTINUE TO OPERATE AFTER THE EXTINGUISHING SYSTEM HAS BEEN ACTIVATED UNLESS FAN SHUTDOWN IS REQUIRED BY A LISTED COMPONENT OF THE VENTILATION SYSTEM OR BY THE DESIGN OF THE EXTINGUISHING SYSTEM.

(8.2.3.2) THE HOOD EXHAUST FAN SHALL START UPON ACTIVATION OF THE EXTINGUISHING SYSTEM IF THE EXHAUST FAN AND ALL COOKING EQUIPMENT SERVED BY THE FAN HAVE BEEN SHUT DOWN, UNLESS FAN SHUTDOWN IS REQUIRED BY A LISTED COMPONENT OF THE VENTILATION SYSTEM OR BY THE LISTING OF THE EXTINGUISHING SYSTEM.

(8.3.2) WHEN THE FIRE-EXTINGUISHING SYSTEM ACTIVATES, MAKEUP AIR SUPPLIED INTERNALLY TO A HOOD SHALL BE SHUT OFF.

(10.4.1) UPON ACTIVATION OF ANY FIRE EXTINGUISHING SYSTEM FOR A COOKING OPERATION, ALL SOURCES OF FUEL AND ELECTRICAL POWER THAT PRODUCE HEAT TO ALL EQUIPMENT REQUIRING PROTECTION BY THAT SYSTEM SHALL AUTOMATICALLY SHUT OFF.

(10.4.3) ANY GAS APPLIANCE NOT REQUIRING PROTECTION BUT LOCATED UNDER VENTILATING EQUIPMENT WHERE PROTECTED APPLIANCES ARE LOCATED SHALL BE AUTOMATICALLY SHUT OFF UPON ACTIVATION OF THE EXTINGUISHING SYSTEM

(10.4.4) SHUTOFF DEVICE SHALL REQUIRE MANUAL RESET.

(10.5.1.1) AT LEAST ONE MANUAL ACTUATION DEVICE SHALL BE LOCATED IN A MEANS OF EGRESS OR AT A LOCATION ACCEPTABLE TO THE AHJ.

(10.5.1.2) THE MANUAL ACTUATION DEVICE SHALL CLEARLY IDENTIFY THE HAZARD PROTECTED.

CMC 2018 EDITION

(513.5) MANUAL ACTIVATION SHALL BE ACCESSIBLE IN THE EVENT OF A FIRE. NOT LESS THAN ONE MANUAL ACTUATION DEVICE SHALL BE LOCATED NOT LESS THAN 10 FEET (3048 MM) AND NOT MORE THAN 20 FEET (6096 MM) FROM THE PROTECTED EXHAUST SYSTEM(S). [IBC 2018: 904.12.1]

INSTALLATION REQUIREMENTS

1. ALL PIPE SHALL BE SCHEDULE 40 BLACK IRON. CHROME PLATED/SLEEVED WHERE EXPOSED.
2. ALL CYLINDER SYSTEMS SHALL HAVE 3/8" SUPPLY LINES AND 3/8" BRANCH LINES.
3. ALL WIRE ROPE SHALL BE 1/16" STAINLESS STEEL AND RUN THROUGH 1/2" EMT CONDUIT.
4. U.L. LISTED CORNER PULLEYS REQUIRED WHENEVER THE STAINLESS STEEL CABLE DIRECTION CHANGES.
5. ALL EQUIPMENT WITH FIRE PROTECTION MUST BE SECURED TO FLOOR. (NOT BY STREIVOR)
6. SWIVEL ADAPTERS MAY BE ADDED TO NOZZLES FOR UP TO 30° ROTATION.

SYSTEM #1

HOOD #41

DUCT	PLENUM	APPLIANCE	COVERAGE DESCRIPTION	NOZZLE	QTY.	FLOW POINTS	PAGE
■	☐	☐	DUCT	--	-	#	-
☐	■	☐	PLENUM	--	-	#	-

HOOD #42

DUCT	PLENUM	APPLIANCE	COVERAGE DESCRIPTION	NOZZLE	QTY.	FLOW POINTS	PAGE
■	☐	☐	DUCT	--	-	#	-
☐	■	☐	PLENUM	--	-	#	-
☐	☐	■	TILT SKILLET	--	-	#	-

HOOD #46

DUCT	PLENUM	APPLIANCE	COVERAGE DESCRIPTION	NOZZLE	QTY.	FLOW POINTS	PAGE
■	☐	☐	DUCT	--	-	#	-
☐	■	☐	PLENUM	--	-	#	-
☐	☐	■	BROILER	--	-	#	-
☐	☐	■	GRIDDLE	--	-	#	-

HOOD #47

DUCT	PLENUM	APPLIANCE	COVERAGE DESCRIPTION	NOZZLE	QTY.	FLOW POINTS	PAGE
■	☐	☐	DUCT	--	-	#	-
☐	■	☐	PLENUM	--	-	#	-
☐	☐	■	RANGE	--	-	#	-
☐	☐	■	FRYER	--	-	#	-

CYLINDER/PIPING LIMITATIONS

CYLINDER	FLOW POINTS	TOTAL LENGTH*	TOTAL VOLUME	FIRST TO LAST NOZZLE LENGTH*	FIRST TO LAST NOZZLE VOLUME
PCL-460	15	69.33 FT	2600 ML	53.33 FT	2000 ML
PCL-460	14	90.67 FT	3400 ML	80.00 FT	3000 ML
PCL-300	10	50.93 FT	1910 ML	30.00 FT	1125 ML
PCL-160	5	40.00 FT	1500 ML	16.00 FT	600 ML

CABLE/LINE LIMITATIONS

ITEM	LENGTH (MAX.)	PULLEYS (MAX.)	BRACKETS (MAX.)
FUSIBLE LINK (pg. 4-5)	150.00 FT	40	20
PULL STATION(S) (pg. 4-9)	150.00 FT	40	N/A
GAS VALVE(S) (pg. 4-10)	100.00 FT	30	N/A

PAGE NUMBERS REFERENCED FROM THE PYROCHEM FIRE SUPPRESSION SYSTEM TECHNICAL MANUAL
* CALCULATIONS BASED ON 3/8" PIPE (37.5 ML/FT) (SEE pg. 3-14)
**ML STYLE FUSIBLE LINK INCLUDED WITH SYSTEM (NOT SUPPLIED BY STREIVOR). FUSIBLE LINK TEMPERATURE RATING TO BE VERIFIED AND DETERMINED IN FIELD.

LEGEND

SYSTEM # : HOOD #
CONTROL HEAD — DETECTION LINE ROUTE
PULL STATION — K-CLASS FIRE EXTINGUISHER (SUPPLIED BY OTHERS UNLESS NOTED OTHERWISE)
RESET RELAY — GAS VALVE
PATH OF EGRESS

NMCH3 CONTROL HEAD (PART # 551203)

ELECTRICAL SWITCH (PART # 551154)

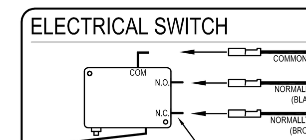

- QUANTITY: 3
- SWITCH IS RATED AT 250 VAC, 21A RESISTIVE; 250 VAC, 2 HP; 125 VAC, 1 HP

ALARM SWITCH (PART # 550077)

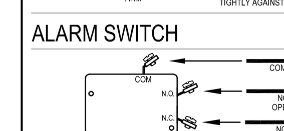

- QUANTITY: 1
- SWITCH IS RATED AT 28 VDC, 50 mA
- FIRE SUPPRESSION SYSTEM TO BE FIELD WIRED INTO BUILDING FIRE ALARM SYSTEM (BY OTHERS).

ELECTRICAL SWITCH WIRING

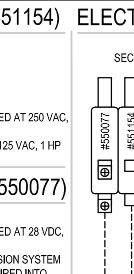

- REFER TO NFPA 96 CODES 8.3.2 & 10.4.1 FOR MORE INFORMATION
- SHUNT DEVICE TO BE NORMALLY OPEN (NOT PROVIDED BY STREIVOR)
- EXCEPT FOR ALARM INITIATING SWITCH, NO ELECTRICAL CONNECTIONS ARE TO BE MADE INSIDE THE CONTROL HEAD ENCLOSURE.

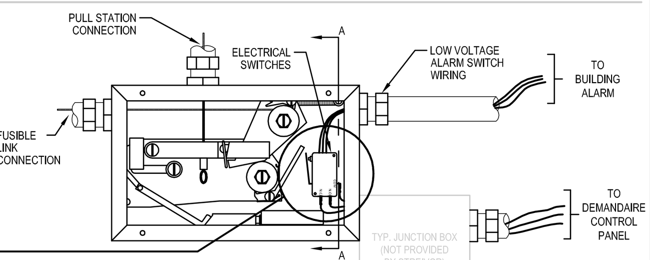

- RECOMMENDED JUNCTION BOX LOCATION
- NO ELECTRICAL CONNECTIONS ARE TO BE MADE INSIDE THE CONTROL HEAD ENCLOSURE EXCEPT FOR ALARM INITIATING SWITCH

DEMANDAIRE CONTROL PANEL

- REFER TO DEMANDAIRE DRAWINGS FOR MORE INFORMATION AND LOCATION

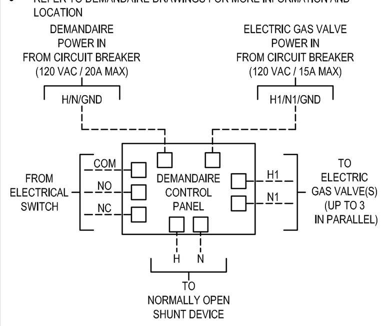

ELECTRIC GAS SHUT-OFF VALVE & FLANGED Y-STRAINER (SEE MEP DRAWINGS FOR LOCATION)

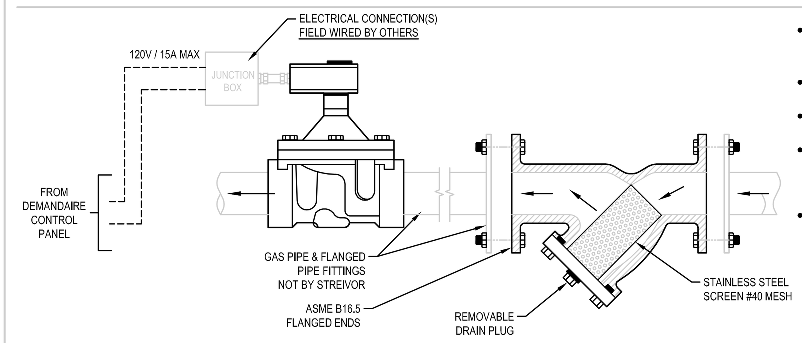

- GAS SHUT-OFF VALVE(S) TO BE SIZED AND LOCATED PER MEP DRAWINGS **(MAXIMUM VALVE SIZE: 3" NPT)**
- VALVE(S) AND STRAINERS TO BE INSTALLED BY PLUMBING DIVISION
- EACH VALVE REQUIRES SEPARATE 120VAC/1, 15A CIRCUIT
- ACTIVATION OF THE FIRE EXTINGUISHING SYSTEM SHALL SHUT OFF THE VALVE PREVENTING GAS FLOW AND VALVE TO REMAIN CLOSED UNTIL THE RESET RELAY IS MANUALLY RESET.
- Y-STRAINER REQUIRED FOR THE PROTECTION OF THE GAS VALVE. INSTALL Y-STRAINER ON THE INLET SIDE OF THE GAS VALVE (AS CLOSE AS POSSIBLE).

Y-STRAINER NOT PROVIDED BY STREIVOR UNLESS SPECIFICALLY INCLUDED IN PURCHASE ORDER.

PULL STATION (PART # 551074)

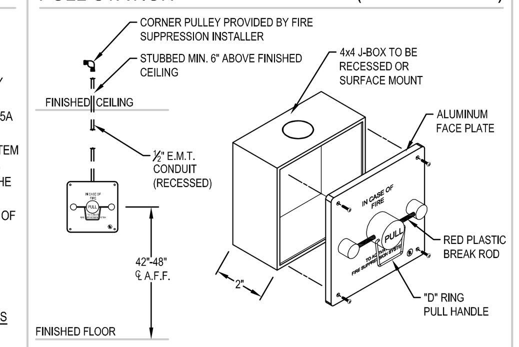

GENERAL NOTES:

NOTES TO ARCHITECT AND/OR CONTRACTOR: STREIVOR, INC. (STREIVOR AIR SYSTEMS, STREIVOR STAINLESS) IS A SPECIALIST IN THE LAYOUT AND DESIGN OF KITCHEN VENTILATION SYSTEMS, AND IN NO WAY PURPORTS TO BE ARCHITECTS OR ENGINEERS.

THIS PLAN IS SUBMITTED FOR THE CONVENIENCE OF THE ARCHITECT AND/OR CONTRACTOR AND IS DONE FROM AVAILABLE ARCHITECTURAL INFORMATION. ALL MEASUREMENTS ARE SUBJECT TO PHYSICAL VERIFICATION AND ANY DEVIATIONS OR DISCREPANCIES SHALL BE DIRECTED TO THE ATTENTION OF STREIVOR, INC. IN WRITING.

STREIVOR, INC. ACCEPTS NO RESPONSIBILITY FOR WORK DONE BY SAID ARCHITECT OR GENERAL CONTRACTOR OR THEIR REPRESENTATIVES OR SUBCONTRACTORS, AND WILL NOT STAND ANY EXPENSE FOR CHANGES MADE NECESSARY DUE TO LOCAL BUILDING CODES, ORDINANCES, STRUCTURAL CONDITIONS, OR BY ANY SUBSTITUTIONS OR CHANGES IN EQUIPMENT SHOWN ON THIS PLAN.

ANY ERRORS, AMBIGUITIES OR OMISSIONS IN THIS PLAN OR SPECIFICATIONS SHALL BE REPORTED TO STREIVOR, INC. FOR CORRECTIONS BEFORE ANY OF THE WORK IS STARTED. UNLESS EXPRESSLY STIPULATED, NO ADDITIONAL ALLOWANCE WILL BE MADE IN FAVOR OF THE OWNER OR CONTRACTOR. BY VIRTUE OF ERROR, AMBIGUITY OR OMISSION WHICH SHOULD HAVE BEEN DISCOVERED DURING THE PREPARATION OF BID ESTIMATES, AND DIRECTED TO THE ATTENTION OF STREIVOR, INC. IN A TIMELY MANNER.

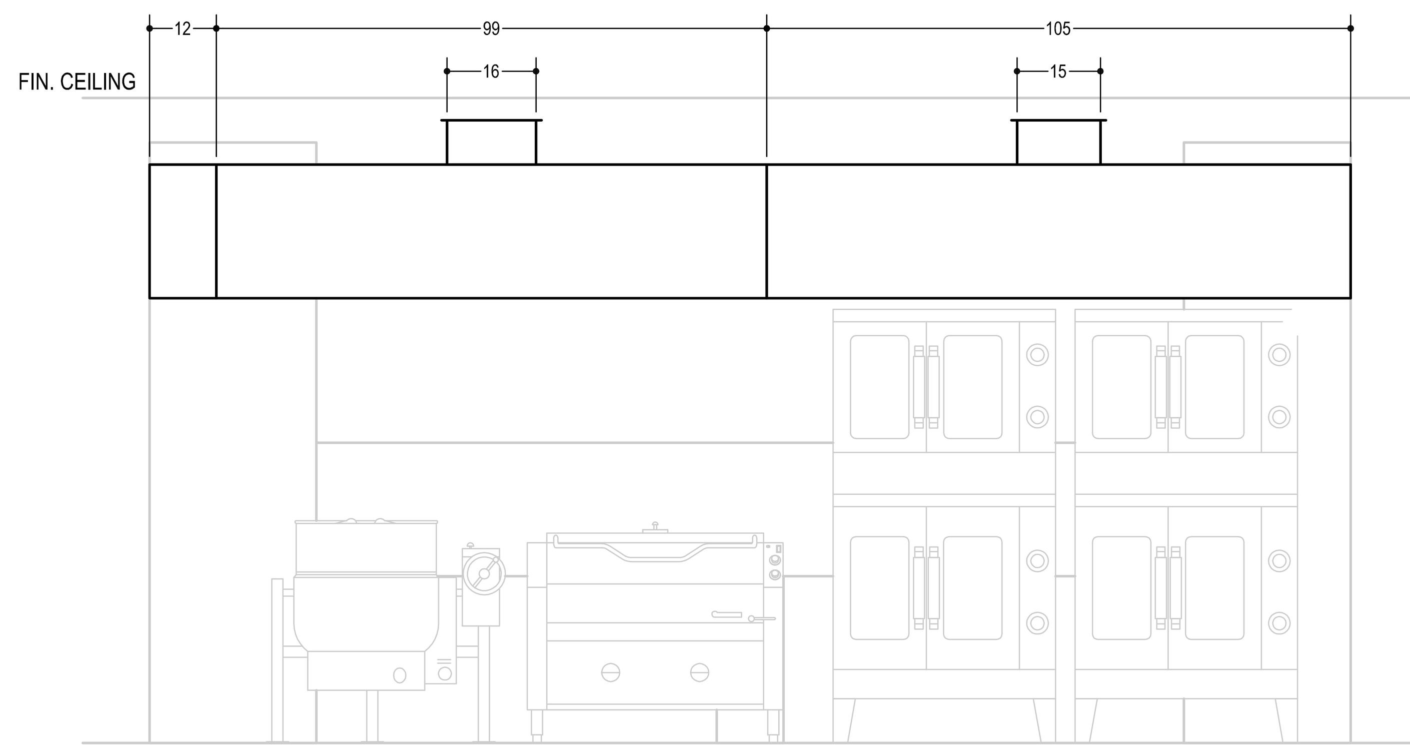

SYSTEM #1 : HOOD #42
ELEVATION VIEW - SCALE : 1/2" = 1'-0"

SYSTEM #1 : HOOD #41
ELEVATION VIEW - SCALE : 1/2" = 1'-0"

NOTE: FIELD PIPING TO BE INSTALLED BY A STREIVOR APPOINTED FIRE INSTALLER

FIRE SUPPRESSION SYSTEM CABINET

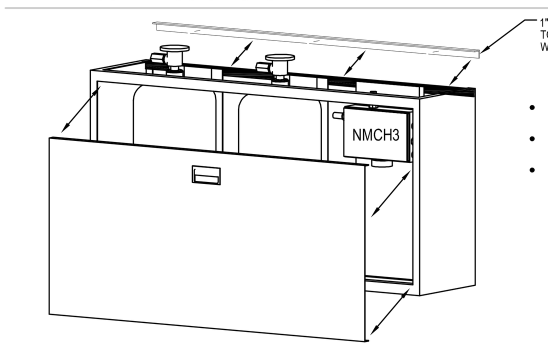

- 36" MINIMUM CLEARANCE REQURIED IN FRONT OF THE REMOVABLE CABINET DOOR.
- SUPPORT BACKING REQUIRED IF CABINET MOUNTS TO WALL
- CABINET AND FIRE SUPPRESSION SYSTEM COMPONENTS APPROXIMATELY 100 LBS/FT. SEE PATH OF EGRESS DRAWING FOR CABINET DIMENSIONS)

CYLINDER	PCL-160	PCL-300	PCL-460
WEIGHT	34 LBS	53 LBS	83 LBS

PYRO-CHEM FIRE SUPPRESSION SYSTEM

SCALE: N.T.S.

1. HEAT SENSING DETECTORS LOCATED OVER APPLIANCES AND IN DUCT/PLENUM AREAS MONITOR COOKING TEMPERATURE.
2. WHEN A FIRE OCCURS AND THE TEMPERATURE RATING OF THE DETECTOR IS EXCEEDED, THE FUSIBLE LINK FRACTURES AND TRIGGERS A MECHANICAL ACTIVATION OF THE CONTROL HEAD, RELEASING THE AGENT FROM THE PRESSURIZED CYLINDER.
3. PYRO-CHEM'S HIGHLY CONCENTRATED LIQUID FIRE EXTINGUISHING AGENT, STORED IN A D.O.T. RATED STEEL CYLINDER, FLOWS THROUGH DISTRIBUTION PIPING TO APPLIANCE, DUCT, AND PLENUM AREAS.
4. PRE-ENGINEERED PIPING INSTALLED IN ACCORDANCE WITH UL LISTED PARAMETERS TO DISTRIBUTE EXTINGUISHING AGENT TO NOZZLES.
5. PYRO-CHEM'S PROPRIETARY NOZZLES, WITH CUSTOMIZED DISCHARGE PATTERNS DEVELOPED SPECIFICALLY FOR EACH APPLIANCE, DIRECT THE AGENT ACCURATELY TO ENSURE RAPID FIRE SUPPRESSION.
6. REMOTE PULL STATION PROVIDES A MANUAL MEANS OF ACTIVATING THE SYSTEM.
7. AUXILIARY OUTPUT FUNCTIONS (GAS SHUT-OFF VALVE) PROVIDE A MEANS TO INTERRUPT THE FLOW OF COOKING GAS.
8. Y-STRAINER REQUIRED FOR THE PROTECTION OF THE GAS VALVE
9. THE FIRE EXTINGUISHING AGENT CYLINDER AND MECHANICAL CONTROL HEAD CAN BE MOUNTED IN AN OEM STAINLESS STEEL ENCLOSURE WITH UL LISTED MOUNTING BRACKET
10. JUNCTION BOX FOR NMCH3 CONTROL HEAD ELECTRICAL CONNECTIONS.
11. STREIVOR'S DEMANDAIRE CONTROL PANEL MONITORS FIRE SUPPRESSION ELECTRICAL SWITCH AND SENDS APPROPRIATE CONTROL SIGNALS TO EXHAUST/SUPPLY FAN VFDS UPON ACTIVATION OF FIRE SUPPRESSION SYSTEM.
12. STREIVOR'S HMI TOUCH SCREEN FOR DEMANDAIRE CONTROL PANEL.

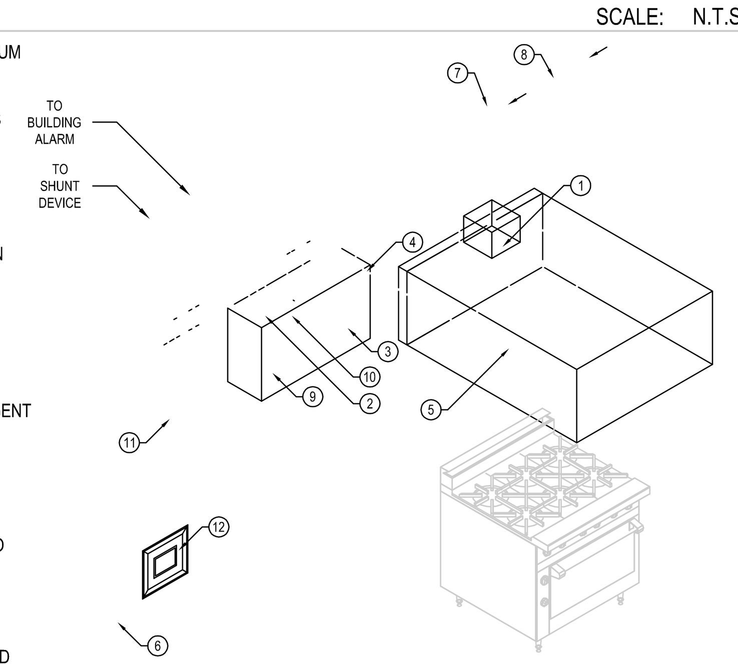

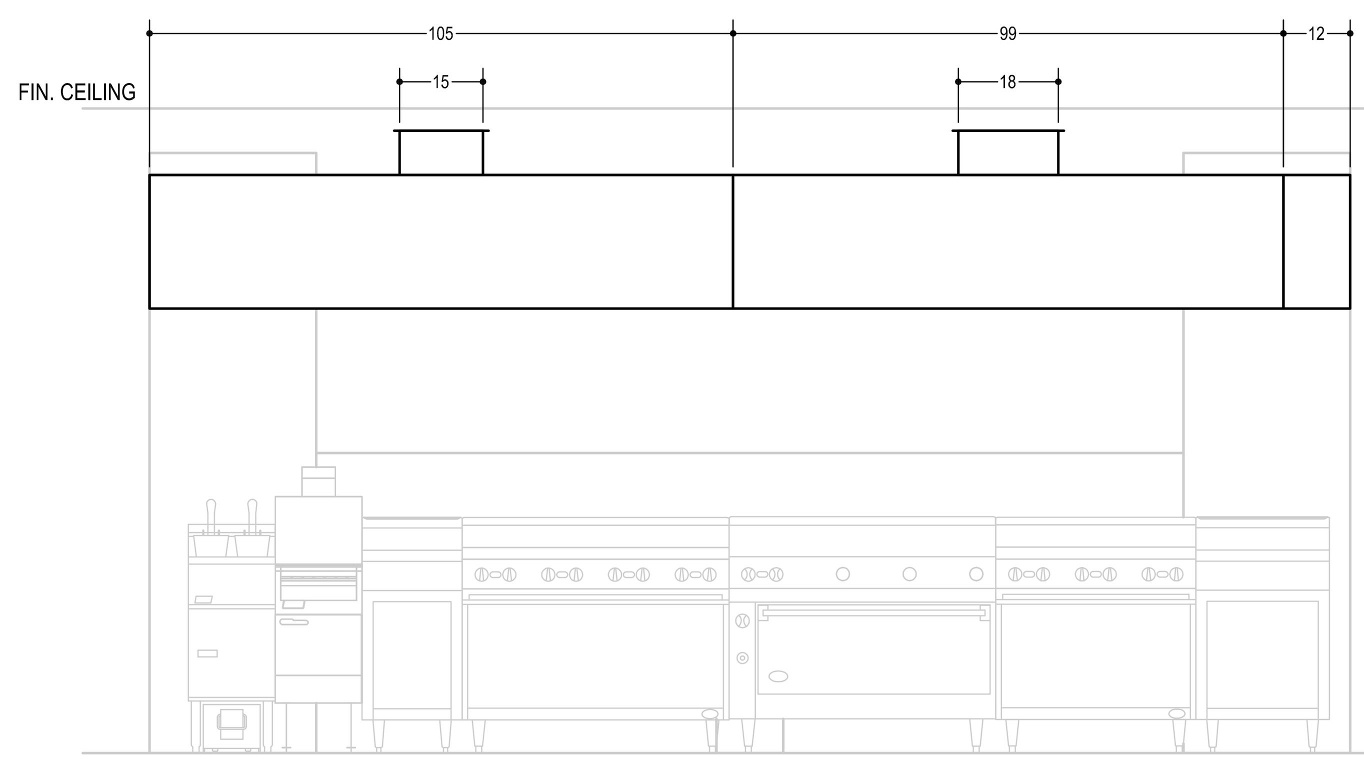

SYSTEM #1 : HOOD #47
ELEVATION VIEW - SCALE : 1/2" = 1'-0"

SYSTEM #1 : HOOD #46
ELEVATION VIEW - SCALE : 1/2" = 1'-0"

GV
- GAS SHUT-OFF VALVE(S) TO BE SIZED AND LOCATED PER MEP DRAWINGS **(MAXIMUM VALVE SIZE: 3" NPT)**
- REFER TO ELECTRIC GAS SHUT-OFF VALVE & FLANGED Y-STRAINER DETAIL
- MUST BE ACCESSIBLE

PATH OF EGRESS

SCALE: 1/4" = 1'-0"

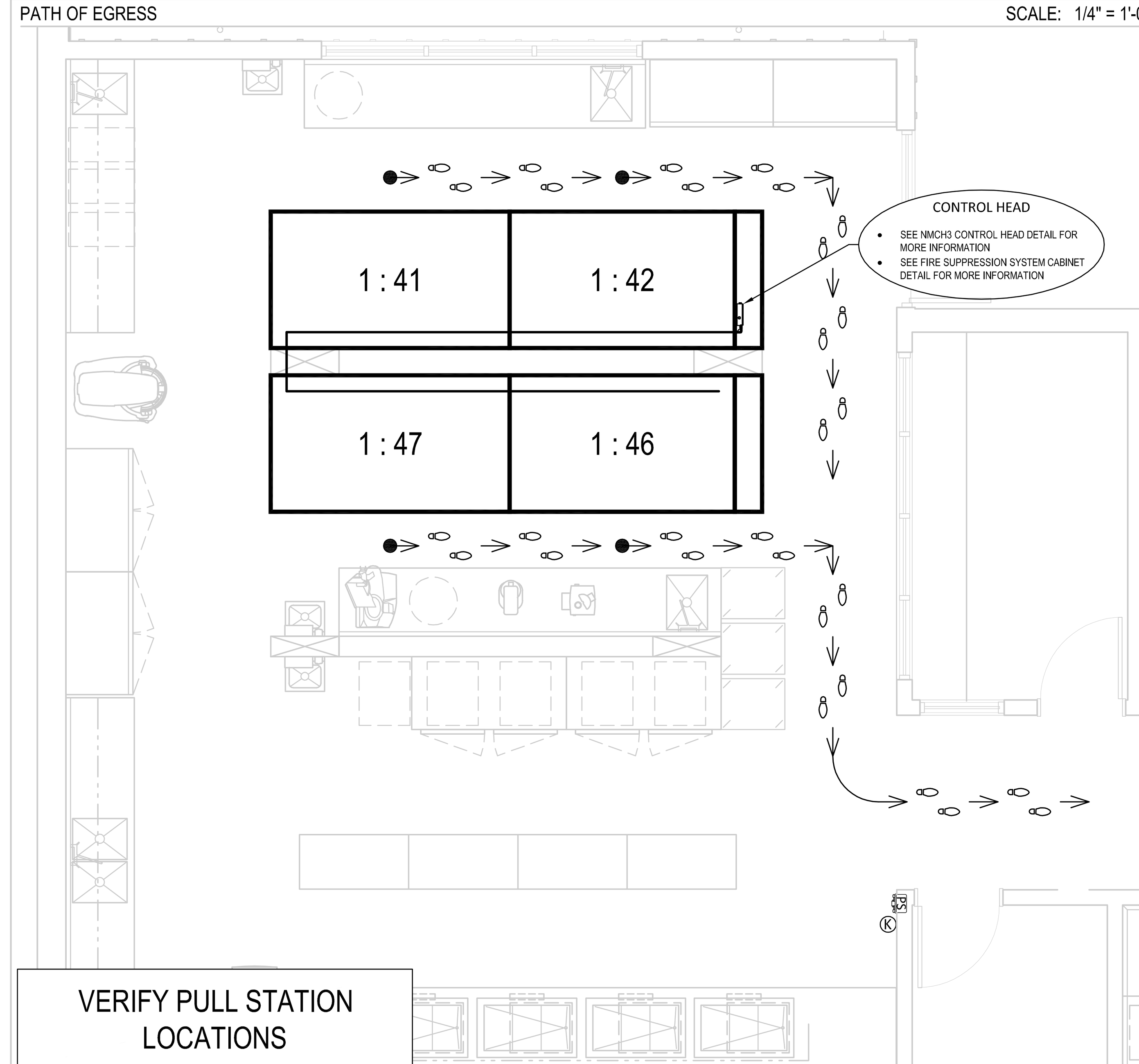

VERIFY PULL STATION LOCATIONS

STREIVOR™ AIR SYSTEMS
"STRIVING FOR EXCELLENCE"
2150 KITTY HAWK ROAD, LIVERMORE, CA 94551
PHONE: (925) 960-9090 FAX:(925) 960-9055
WWW.STREIVOR.COM

PROJECT:
CCC WILLITS

---,-- -----

THE MARSHALL ASSOCIATES

ITEM #:	43
SYSTEM #:	1
HOOD #:	42, 43, 46, & 47
DATE:	01/11/2021
DRAWN BY:	KCS
CHECKED BY:	KSK
CONSULTANT:	THE MARSHALL ASSOCIATES
SCALE: (UNLESS OTHERWISE NOTED)	1/2" = 1' - 0"

IF BAR DOES NOT MEASURE 1" THIS DRAWING IS NOT PLOTTED TO SCALE

△	DESCRIPTION	DATE	INT
△	---	--/--/--	---
△	---	--/--/--	---
△	---	--/--/--	---
△	---	--/--/--	---
△	---	--/--/--	---

DRAWING:
F-01
SHEET 01 OF 01

COPYRIGHT © 2021 STREIVOR, INC.

GENERAL SERVICES
Department of General Services
State of California
Real Estate Services Division
Project Management & Development Branch
707 Third Street, Suite 4-105
West Sacramento, California 95605

NICHOLS MELBURG & ROSSETTO
ARCHITECTS + ENGINEERS
300 Knollcrest Drive
Redding, CA. 96002
(530) 222-3300 (530) 222-3538 FAX
http://www.nmrdesign.com

Copyright © 2021
All ideas, designs, arrangements and plans indicated or represented by this drawing are owned by, and the property of, NICHOLS, MELBURG and ROSSETTO and were created, evolved and developed for use on, and in conjunction with, the specified project. None of such ideas, designs, arrangements or plans shall be used by, or disclosed to any person, firm or corporation for any purpose whatsoever without the written permission of NICHOLS, MELBURG and ROSSETTO.

LICENSE STAMPS
LICENSED ARCHITECT KYLE MATTI C-27504 REN. 10/31/21 STATE OF CALIFORNIA

CONSULTANT
The Marshall Associates, Inc.
Foodservice & Laundry Consultants/Designers
3000 Danville Blvd Suite F-344 Alamo, CA 94507
2129 4th Street Santa Rosa, CA 95404
415/677-1200 Fax 415/677-1210

DRAWING STATUS
CONSTRUCTION DOCUMENTS

ISSUE

No.	Date	Description
1	10/22/2020	INITIAL PLAN REVIEW
2	01/08/2021	AGENCY RESUBMITTAL
3	03/22/2021	AGENCY RESUBMITTAL

If drawing is not 30" x 42" it is a reduced print

PROJECT
RESIDENTIAL CENTER, UKIAH: REPLACEMENT OF EXISTING RESIDENTIAL CENTER
440 EAST HILL ROAD
WILLITS, CALIFORNIA 95490
MENDOCINO COUNTY
CALIFORNIA CONSERVATION CORP

Supervisor	Designed	Drawn

DSA Application No.
02-118630

SHEET TITLE
FOODSERVICE MANUFACTURER DRAWING - FIRE SUPPRESSION

DGS Project Number 000000000001826
NMR Project Number 18-6456

Reference North — NORTH
Sheet Scale
Sheet Number
FS-215

ISSUE DATE
July 9, 2021

IDENTIFICATION STAMP
DIV. OF THE STATE ARCHITECT
APP: 02-118630 INC:
REVIEWED FOR
SS ☐ FLS ☐ ACS ☑
DATE: 04/13/2021

OFFICE OF THE STATE FIRE MARSHAL
APPROVED FIRE AND PANIC ONLY
Approval of this plan does not authorize or approve any omission or deviation from applicable regulations. Final approval is subject to field inspection. One set of approved plans shall be available on the project site at all times.
PERMIT NO.: 20-N-2332-CP
REVIEWED BY: LITO CATAYLO, OSFM
DATE: 4/1/2021

HOOD SCHEDULE					ELECTRICAL SCHEDULE					
HOOD	GROUP	SUPPLY FAN	EXHAUST FAN	FSS#	CIRCUIT	DESCRIPTION	HP	V/Ø	AMPS	FEED
41	---	SF-X	EF-X	1	E10	CONTROL	---	120/1	20	CB
42	---	SF-X	EF-X	1	E20	GAS VALVE	---	120/1	15	CB
46	---	SF-X	EF-X	1	E30	BLDG ALARM	---	---	---	---
47	---	SF-X	EF-X	1	---	---	---	---	---	---
---	---	---	---	---	---	---	---	---	---	---
---	---	---	---	---	---	---	---	---	---	---
---	---	---	---	---	---	---	---	---	---	---
---	---	---	---	---	---	---	---	---	---	---

REFER TO HOOD DRAWINGS FOR HOOD DETAILS

CB: CIRCUIT BREAKER BY ELECTRICAL CONTRACTOR

ELECTRICAL ROUGH-IN SCHEDULE

ITEM	DETAIL	ROUGH-IN REQUIREMENTS	ELECTRICAL CONDUIT
DEMANDAIRE CONTROL PANEL	DCP	MOUNTED IN HOOD UTILITY CABINET	120 VAC, 24 VDC, 4-20mA
HMI ENCLOSURE	HMI	10 1/4" X 9 1/4" I.D. FRAMED OPENING	24 VDC, CAT5
AMBIENT TEMPERATURE MONITOR	ARTD	2X4 J-BOX	4-20mA
---	---	---	---

ELECTRICAL CONTRACTOR TO VERIFY ROUGH-IN LOCATION AND ELECTRICAL REQUIREMENTS

(ES) ELECTRICAL SWITCH

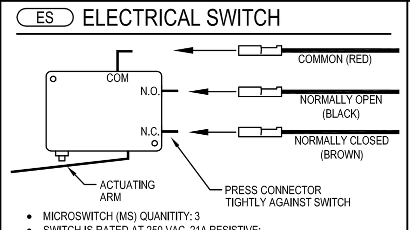

- MICROSWITCH (MS) QUANTITY: 3
- SWITCH IS RATED AT 250 VAC, 21A RESISTIVE; 250 VAC, 2 HP; 125 VAC, 1 HP

(AS) ALARM SWITCH

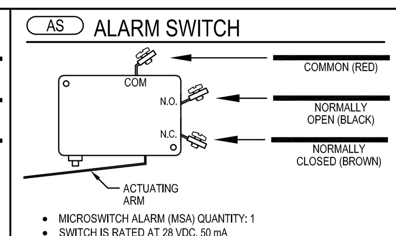

- MICROSWITCH ALARM (MSA) QUANTITY: 1
- SWITCH IS RATED AT 28 VDC, 50 mA
- FIRE SUPPRESSION SYSTEM TO BE FIELD WIRED INTO BUILDING FIRE ALARM SYSTEM (BY OTHERS).

LEGEND

———	STREIVOR FACTORY WIRING	LJ	HOOD CANOPY LIGHT(S) JUNCTION BOX
— - —	HIGH VOLTAGE FIELD WIRING BY OTHERS	TJ	TEMP. MONITOR(S) JUNCTION BOX
- - - -	120/1 VAC FIELD WIRING BY OTHERS	FJ	INTERNAL HOOD FAN(S) JUNCTION BOX
— - - —	LOW VOLTAGE FIELD WIRING BY OTHERS	T#	TEMPERATURE MONITOR
— — —	120/1 VAC ELECTRICAL CONDUIT (ELECTRICAL CONTRACTOR TO VERIFY QUANTITY AND SIZE)	VFD	VARIABLE FREQUENCY DRIVE
— — —	LOW VOLTAGE ELECTRICAL CONDUIT (ELECTRICAL CONTRACTOR TO VERIFY QUANTITY AND SIZE)	BMS	BUILDING MANAGEMENT SYSTEM

(ARTD) AMBIENT RESISTANCE TEMPERATURE DETECTOR (ARTD)

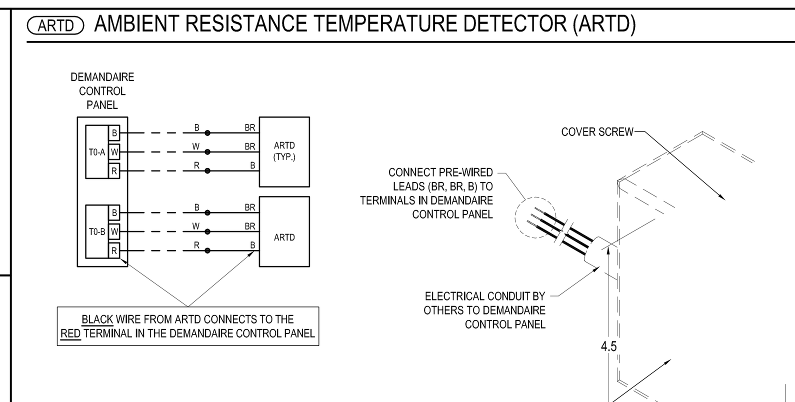

ELECTRICAL WIRING NOTES
1. ALL WIRING BETWEEN ARTD AND DEMANDAIRE CONTROL PANEL TO BE UL-LISTED 22 AWG THREE STRANDED SHIELDED COMMUNICATION CABLE (SHIELDS MUST BE GROUNDED IN DEMANDAIRE CONTROL PANEL)
2. ARTD J-BOX (PROVIDED BY OTHERS) SHALL BE INSTALLED AT LEAST 80" A.F.F., AWAY FROM DIRECT SUNLIGHT, MAKEUP AIR DIFFUSER AIRSTREAMS AND OTHER SOURCES OF HEATED OR COOLED AIR

(E1) HOOD CANOPY LIGHT FIXTURE WIRING DETAIL

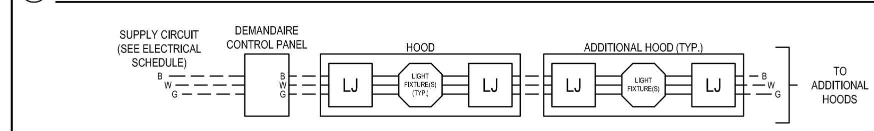

ELECTRICAL WIRING NOTES:
1. QUANTITY OF LIGHT(S) WILL BE DETERMINED BY THE LENGTH & QUANTITY OF HOODS
2. SHORT CIRCUIT PROTECTION MUST BE PROVIDED BY CONTRACTOR PERFORMING INSTALLATION - (1440 W MAXIMUM PER LIGHT(S) CIRCUIT)
3. LIGHTS CONTROLLED VIA HMI TOUCH SCREEN OR TOGGLE SWITCH - REFER TO DEMANDAIRE DRAWINGS FOR MORE INFORMATION

(E3) INTERNAL HOOD FAN (IHF) WIRING DETAIL

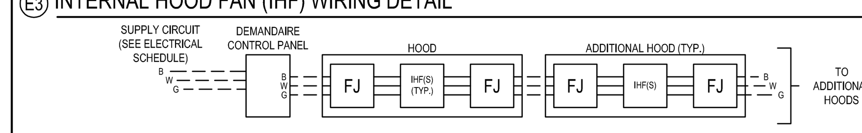

ELECTRICAL WIRING NOTES:
1. QUANTITY OF INTERNAL HOOD FANS WILL BE DETERMINED BY THE LENGTH & QUANTITY OF HOODS
2. DEMANDAIRE CONTROL PANEL TO ELECTRICALLY INTERLOCK ASSOCIATED EXHAUST FAN(S), MAKE UP AIR FAN(S) AND INTERNAL HOOD FAN(S) (IHF)
3. MAXIMUM OF TWO INTERNAL HOOD FANS PER HOOD
4. SHORT CIRCUIT PROTECTION MUST BE PROVIDED BY CONTRACTOR PERFORMING INSTALLATION
5. REFER TO DEMANDAIRE DRAWINGS FOR MORE INFORMATION
6. DEMANDAIRE CONTROL PANEL CONTROLS INTERNAL HOOD FANS TO COMPLY WITH NFPA 96 SECTION 8.3.2

NFPA 96 SECTION 8.3.2:
WHEN ITS FIRE-EXTINGUISHING SYSTEM DISCHARGES, MAKEUP AIR SUPPLIED INTERNALLY TO A HOOD SHALL BE SHUT OFF

(E2) RESISTANCE TEMPERATURE DETECTOR (RTD) WIRING DETAIL

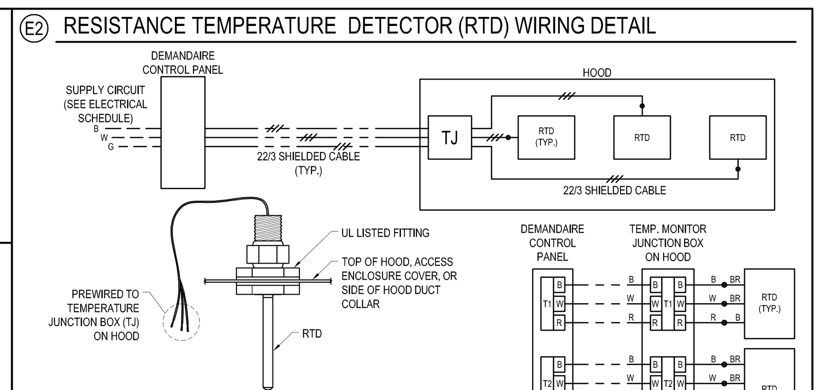

ELECTRICAL WIRING NOTES
1. WHEN THE TEMPERATURE DETECTED BY THE RTD EXCEEDS ONE OF ITS SET POINTS, THE FAN SPEED CONTROL SIGNAL PROVIDED BY THE DEMANDAIRE CONTROL PANEL WILL VARY ACCORDINGLY
2. EACH RTD SET POINT IS ADJUSTABLE VIA HMI TOUCH SCREEN SETTINGS
3. ALL WIRING BETWEEN RTD AND DEMANDAIRE CONTROL PANEL TO BE UL-LISTED 22 AWG THREE STRAND SHIELDED COMMUNICATION CABLE
4. SHORT CIRCUIT PROTECTION MUST BE PROVIDED BY CONTRACTOR PERFORMING INSTALLATION
5. REFER TO DEMANDAIRE DRAWINGS FOR MORE INFORMATION

DRAWING APPROVAL

THIS DRAWING MUST BE REVIEWED, SIGNED & RETURNED TO STREIVOR AIR SYSTEMS PRIOR TO THE START OF FABRICATION.

VERIFY THE FOLLOWING:

1. ALL DIMENSIONAL INFORMATION, MOUNTING LOCATIONS & CLEARANCES.
2. FAN HORSEPOWER, VOLTAGE & PHASE (IF VFDS OR MOTOR STARTERS ARE PROVIDED BY STREIVOR)

APPROVED FOR FABRICATION

☐ APPROVED
☐ APPROVED AS NOTED
☐ REVISE & RESUBMIT

APPROVED BY ______ DATE

NOTE TO REVIEWER:
ANY CHANGES IN COOKING EQUIPMENT SUCH AS EQUIPMENT POSITION, TYPE AND/OR INCREASE IN ENERGY OUTPUT MAY AFFECT EXHAUST AIRFLOW. STREIVOR AIR SYSTEMS MUST BE NOTIFIED OF ANY CHANGES THAT OCCUR PRIOR TO FABRICATION, AS RE-ENGINEERING OF THE EXHAUST AIRFLOW MAY BE REQUIRED.

DEMANDAIRE DESIGN PLAN

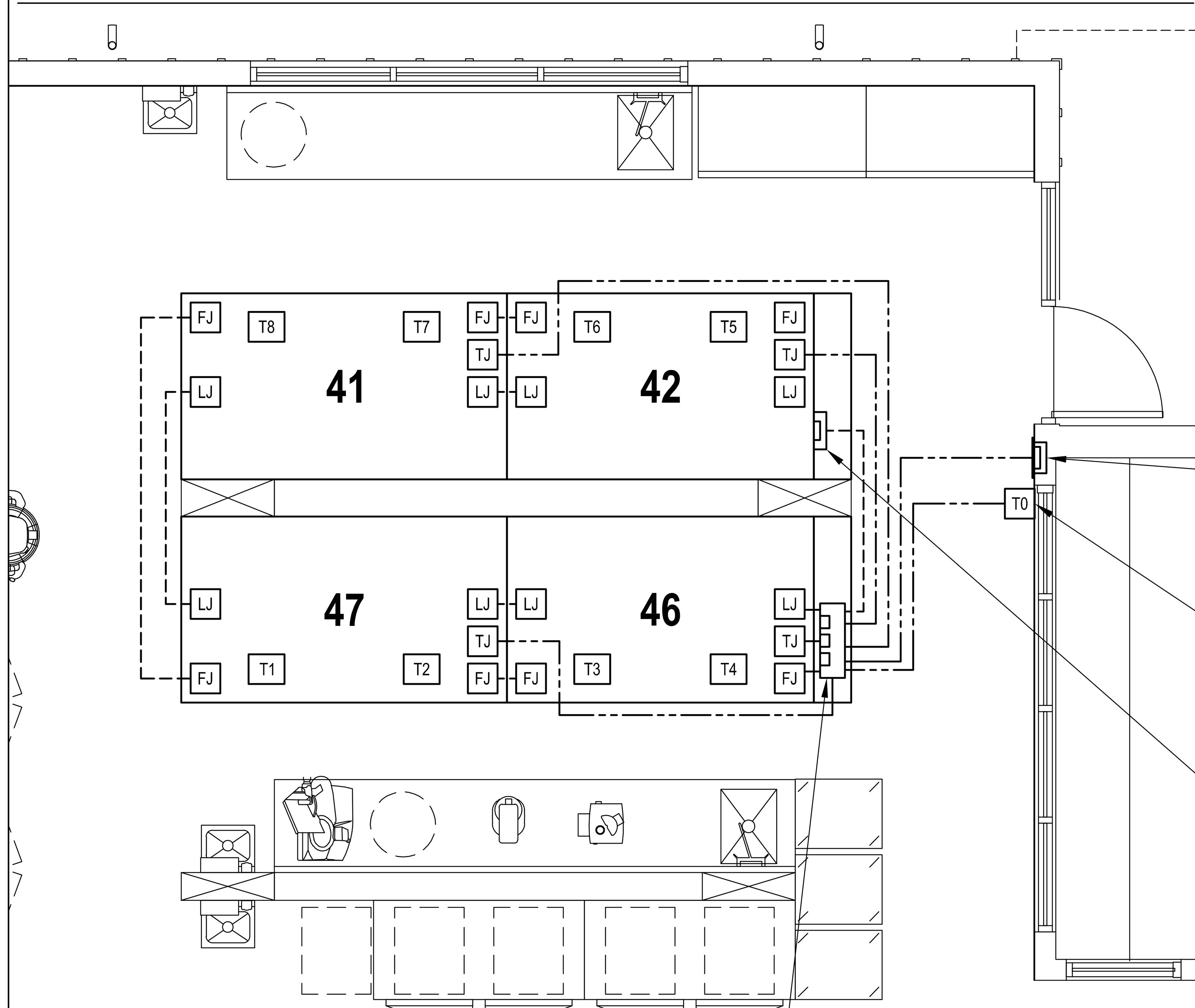

HUMAN MACHINE INTERFACE (HMI) TOUCH SCREEN

(SEE DETAIL HMI)

AMBIENT RESISTANCE TEMPERATURE DETECTOR (ARTD) #T0

(SEE DETAILS HMI & ARTD)

FIRE SUPPRESSION SYSTEM (FSS) #1 MICROSWITCHES

LOCATED IN FSS #1 UTILITY CABINET
(SEE DETAIL ES & AS)

DEMANDAIRE CONTROL PANEL #45

LOCATED IN HOOD UTILITY CABINET
CIRCUIT E10: 120V/1, 20 AMPS
(SEE ELECTRICAL SCHEDULE)

(HMI) HUMAN MACHINE INTERFACE

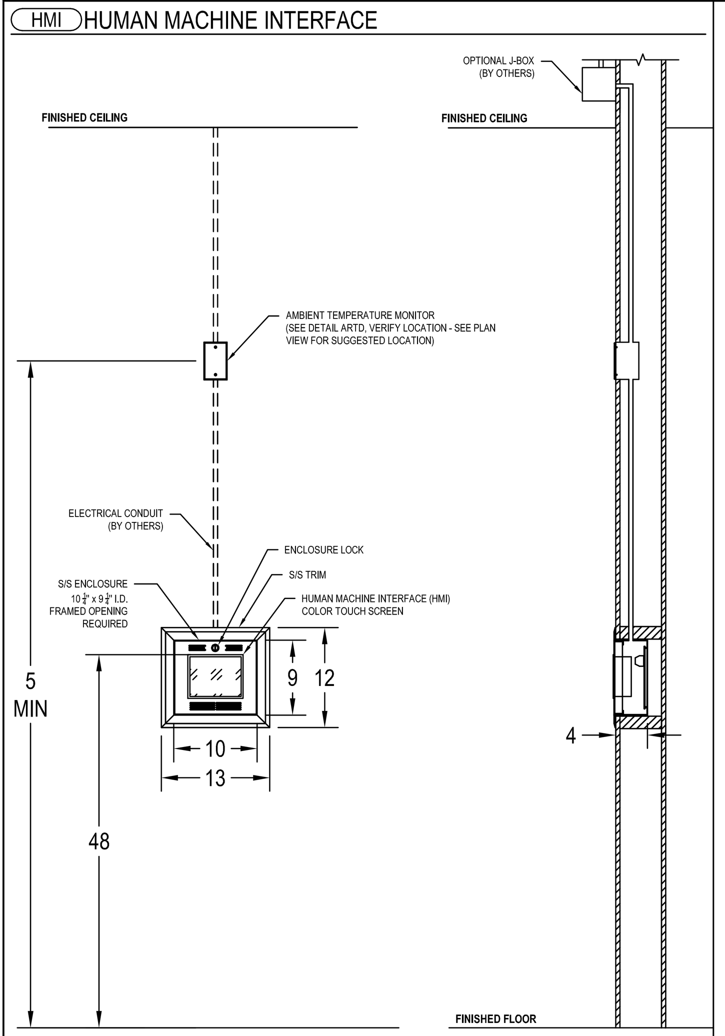

DEMANDAIRE GOLD CONTROL PANEL #45

NOTE:
MAIN DISCONNECT(S) AND BRANCH PROTECTION PROVIDED BY OTHERS FROM UL 489 LISTED CIRCUIT BREAKER(S)

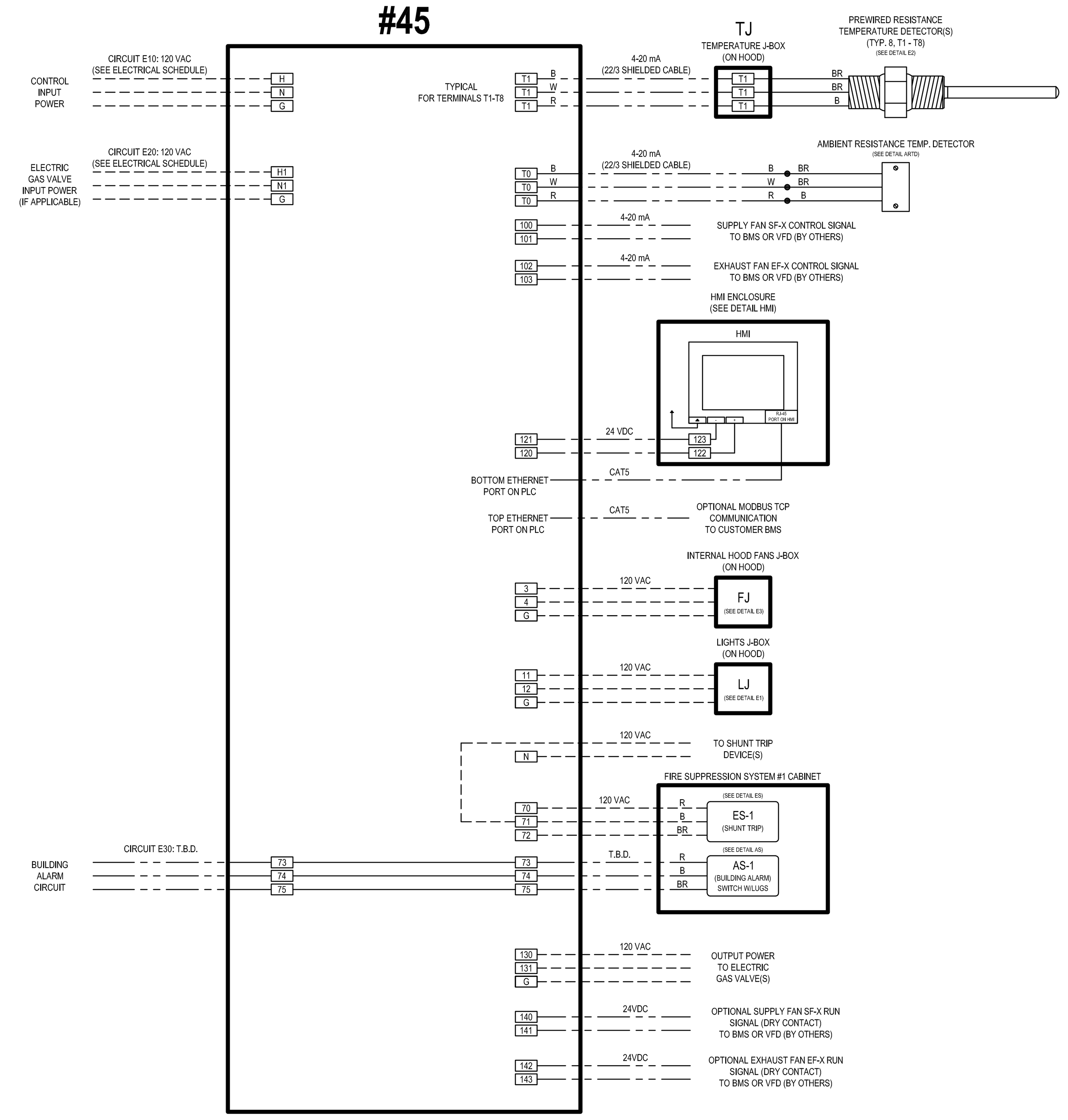

NOTE:
DEMANDAIRE CONTROL PANEL ENCLOSURES REQUIRE
36 INCHES MININUM OF CLEAR SPACE IN FRONT OF THE DOOR

GENERAL NOTES

NOTES TO ARCHITECT AND/OR CONTRACTOR: STREIVOR, INC. (STREIVOR AIR SYSTEMS, STREIVOR STAINLESS) IS A SPECIALIST IN THE LAYOUT AND DESIGN OF KITCHEN VENTILATION SYSTEMS, AND IN NO WAY PURPORTS TO BE ARCHITECTS OR ENGINEERS.

THIS PLAN IS SUBMITTED FOR THE CONVENIENCE OF THE ARCHITECT AND/OR CONTRACTOR AND IS DONE FROM AVAILABLE ARCHITECTURAL INFORMATION. ALL MEASUREMENTS ARE SUBJECT TO PHYSICAL VERIFICATION AND ANY DEVIATIONS OR DISCREPANCIES SHALL BE DIRECTED TO THE ATTENTION OF STREIVOR, INC. IN WRITING.

STREIVOR, INC. ACCEPTS NO RESPONSIBILITY FOR WORK DONE BY SAID ARCHITECT OR GENERAL CONTRACTOR OR THEIR REPRESENTATIVES OR SUBCONTRACTORS, AND WILL NOT STAND ANY EXPENSE FOR CHANGES MADE NECESSARY DUE TO LOCAL BUILDING CODES, ORDINANCES, STRUCTURAL CONDITIONS, OR BY ANY SUBSTITUTIONS OR CHANGES IN EQUIPMENT SHOWN ON THIS PLAN.

ANY ERRORS, AMBIGUITIES OR OMISSIONS IN THIS PLAN OR SPECIFICATIONS SHALL BE REPORTED TO STREIVOR, INC. FOR CORRECTIONS BEFORE ANY OF THE WORK IS STARTED. UNLESS EXPRESSLY STIPULATED, NO ADDITIONAL ALLOWANCE WILL BE MADE IN FAVOR OF THE OWNER OR CONTRACTOR. BY VIRTUE OF ERROR, AMBIGUITY OR OMISSION WHICH SHOULD HAVE BEEN DISCOVERED DURING THE PREPARATION OF BID ESTIMATES, AND DIRECTED TO THE ATTENTION OF STREIVOR, INC. IN A TIMELY MANNER.

PRE-INSTALLATION

OBTAIN, READ AND UNDERSTAND STREIVOR'S DEMANDAIRE INSTALLATION, OPERATION AND MAINTENANCE MANUAL PRIOR TO INSTALLATION, OR STARTUP OR BALANCING.

INSTALLATION

ALL INSTALLATION AND STARTUP MUST BE PERFORMED BY QUALIFIED PERSONS AND IN ACCORDANCE WITH ALL APPLICABLE PREVAILING CODES AND STANDARDS

WIRING NOTES

1. FIELD WIRING TERMINALS USE COPPER WIRE ONLY
2. WIRE MUST BE RATED UP TO 600V
3. WIRE TEMPERATURE RATING 60° C MIN
4. LARGE TERMINAL BLOCK TIGHTENING TORQUE 1.5 - 1.8 (NM)
5. SMALL TERMINAL BLOCK TIGHTENING TORQUE 0.6 - 0.8 (NM)
6. SHIELDS OF SHIELDED CABLES MUST BE GROUNDED ON ONE SIDE

EACH FAN MOTOR MUST BE THREE PHASE AND RATED FOR USE WITH VFD

VFDs NOT PROVIDED BY STREIVOR

UL LISTED STD 508A

STREIVOR™ AIR SYSTEMS
"STRIVING FOR EXCELLENCE"
2150 KITTY HAWK ROAD, LIVERMORE, CA 94551
PHONE: (925) 960-9090 FAX:(925) 960-9055
WWW.STREIVOR.COM

PROJECT:
CCC WILLITS

---,-- -----

THE MARSHALL ASSOCIATES

SHORT CIRCUIT CURRENT: 5KA RMS SYMMETRICAL, 120 V MAXIMUM

SERIAL NO.	DA-------
CONTROL PANEL NO.	---
C.P. ENCLOSURE NO.	---
HMI ENCLOSURE NO.	---
ITEM #:	45
MODEL:	GOLD
DATE:	1/11/2021
DRAWN BY:	JWS
CHECKED BY:	KSK
CONSULTANT:	THE MARSHALL ASSOCIATES
SCALE:	N.T.S.

△	DESCRIPTION	DATE	INT
△	---	--/--/--	---
△	---	--/--/--	---
△	---	--/--/--	---
△	---	--/--/--	---
△	---	--/--/--	---

DRAWING:
DA-01
SHEET 01 OF 01

Copyright © 2021 Streivor, Inc.

DGS GENERAL SERVICES
Department of General Services
State of California
Real Estate Services Division
Project Management & Development Branch
707 Third Street, Suite 4-105
West Sacramento, California 95605

NM&R
NICHOLS MELBURG & ROSSETTO
ARCHITECTS + ENGINEERS
300 Knollcrest Drive
Redding, CA. 96002
(530) 222-3300 (530) 222-3538 FAX
http://www.nmrdesign.com

Copyright © 2021
All ideas, designs, arrangements and plans indicated or represented by this drawing are owned by, and the property of, NICHOLS, MELBURG and ROSSETTO and were created, evolved and developed for use on, and in conjunction with, the specified project. None of such ideas, designs, arrangements or plans shall be used by, or disclosed to any person, firm or corporation for any purpose whatsoever without the written permission of NICHOLS, MELBURG and ROSSETTO.

LICENSE STAMPS
LICENSED ARCHITECT KYLE MATTI C 27504 REN. 10/31/21 STATE OF CALIFORNIA

CONSULTANT
The Marshall Associates, Inc.
Foodservice & Laundry Consultants/Designers
3000 Danville Blvd Suite F-344 Alamo, CA 94507
2129 4th Street Santa Rosa, CA 95404
415/677-1200 Fax 415/677-1210

DRAWING STATUS
CONSTRUCTION DOCUMENTS

ISSUE

No.	Date	Description
1	10/22/2020	INITIAL PLAN REVIEW
2	01/08/2021	AGENCY RESUBMITTAL
3	03/22/2021	AGENCY RESUBMITTAL

If drawing is not 30" x 42" it is a reduced print

PROJECT
RESIDENTIAL CENTER, UKIAH: REPLACEMENT OF EXISTING RESIDENTIAL CENTER
440 EAST HILL ROAD
WILLITS, CALIFORNIA 95490
MENDOCINO COUNTY
CALIFORNIA CONSERVATION CORP

Supervisor	Designed	Drawn

DSA Application No.
02-118630

SHEET TITLE
FOODSERVICE
MANUFACTURER DRAWING - DEMANDAIRE

DGS Project Number 000000000001826
NMR Project Number 18-6456

Reference North
Sheet Scale
Sheet Number
FS-216

ISSUE DATE
July 9, 2021

IDENTIFICATION STAMP
DIV. OF THE STATE ARCHITECT
APP: 02-118630 INC:
REVIEWED FOR
SS ☐ FLS ☐ ACS ☑
DATE: 04/13/2021

OFFICE OF THE STATE FIRE MARSHAL
APPROVED FIRE AND PANIC ONLY
Approval of this plan does not authorize or approve any omission or deviation from applicable regulations. Final approval is subject to field inspection. One set of approved plans shall be available on the project site at all times.
PERMIT NO: 28 N 2332 CP
REVIEWED BY: LEO CATAYLO, OSFM
DATE: 4 / /2021

HORIZONTAL SECTION A-A

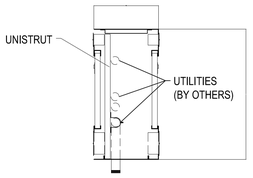

FLOOR MOUNTING DETAILS

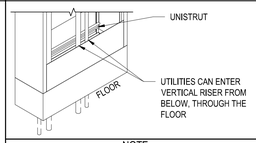

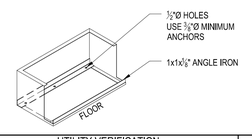

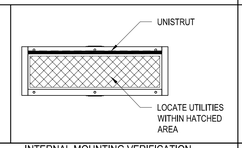

CEILING MOUNTING DETAILS

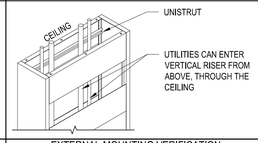

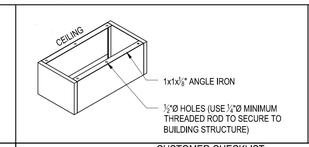

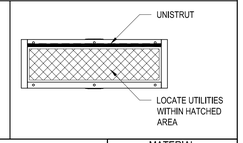

NOTE

STREIVOR UCS SYSTEM(S) REQUIRE ASSEMBLY AND INSTALLATION IN THE FIELD.

THE FIELD COORDINATION, ASSEMBLY AND INSTALLATION OF THE UCS SYSTEM AND COSTS INCURRED TO PERFORM THE FIELD COORDINATION ASSEMBLY AND INSTALLATION, ARE THE RESPONSIBILITY OF THE PURCHASER OF THE UCS SYSTEM FROM STREIVOR, INC.

UTILITY VERIFICATION

VERIFY UTILITIES TO BE INSTALLED IN THE UTILITY CHASE:

- ☐ ELECTRICAL (VOLTAGE) ☐ HIGH ☐ LOW
- ☐ GAS (PRESSURE) ☐ HIGH ☐ LOW
- ☐ WATER (TEMPERATURE) ☐ HOT ☐ COLD
- ☐ STEAM (PRESSURE) ☐ HIGH ☐ LOW
- ☐ PLUMBING VENTING
- ☐ OTHER: _____

INTERNAL MOUNTING VERIFICATION

VERIFY ACCESSORIES TO BE MOUNTED IN THE UTILITY CHASE:

- ☐ LOAD CENTER
- ☐ WATER FILTER
- ☐ FIRE SUPPRESSION GAS SHUT OFF VALVE
- ☐ DCKV CONTROL
- ☐ NONE
- ☐ OTHER: _____

EXTERNAL MOUNTING VERIFICATION

VERIFY ACCESSORIES TO BE MOUNTED ON THE UTILITY CHASE:

- ☐ SALAMANDER
- ☐ WATER FILTRATION
- ☐ SINKS
- ☐ FAUCET
- ☐ POT RACK
- ☐ PASS SHELF
- ☐ WORK TABLE
- ☐ TILE
- ☐ NONE
- ☐ OTHER: _____

CUSTOMER CHECKLIST

VERIFY THE FOLLOWING:

- ☐ VERTICAL RISERS ARE SIZED AND LOCATED TO ACCOMODATE THE UTILITIES
  - ☐ CHANGE SIZE AND/OR LOCATION(S) OF VERTICALS REQUIRED AS SHOWN BELOW
- ☐ UTILITIES ARE LOCATED TO ENTER THE UCS THROUGH THE TOP/BOTTOM OF VERTICALS
  - ☐ RELOCATE UTILITIES TO ENTER THE UCS THROUGH THE VERTICAL RISERS
- ☐ JUNCTION BOX SIZE(S) AND LOCATION(S) ARE CORRECT AS SHOWN
  - ☐ RESIZE AND/OR RELOCATE JUNCTION BOXES AS SHOWN BELOW

MATERIAL

TYPE 304 18 GAUGE STAINLESS STEEL w/ #4 FINISH

WEIGHT

900 LBS

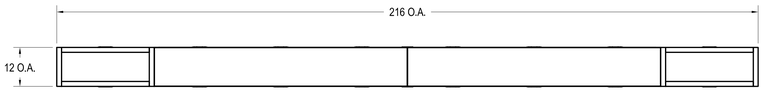

ITEM #44
PLAN

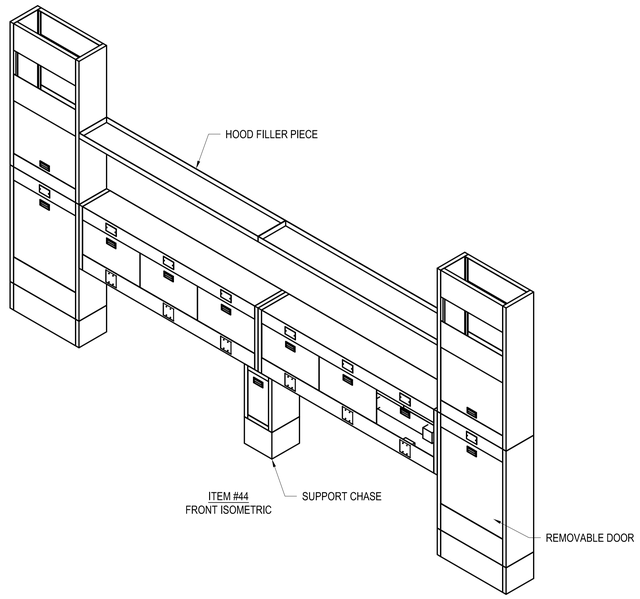

ITEM #44
FRONT ISOMETRIC

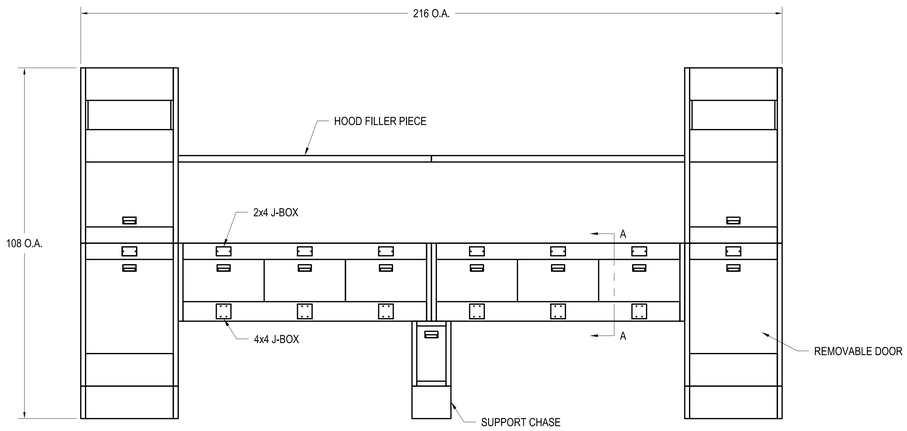

ITEM #44
FRONT ELEVATION

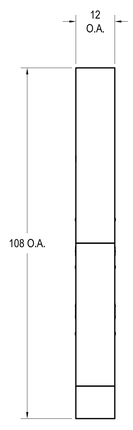

ITEM #44
SIDE

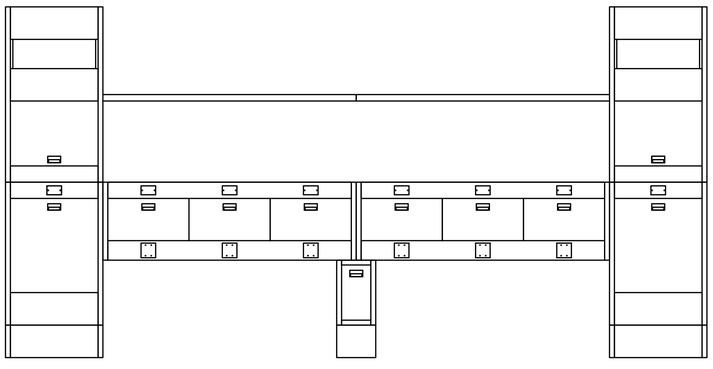

ITEM #44
BACK ELEVATION

ITEM #44: UCS-216-12

CUSTOMER APPROVAL

THIS DRAWING MUST BE REVIEWED, SIGNED & RETURNED TO STREIVOR STAINLESS PRIOR TO THE START OF FABRICATION.

VERIFY THE FOLLOWING:

1. ALL DIMENSIONAL INFORMATION
2. MOUNTING LOCATIONS
3. UTILITITY INFORMATION
4. CLEARANCES

APPROVED FOR FABRICATION

☐ APPROVED ☐ APPROVED AS NOTED
☐ REVISE & RESUBMIT

_____
APPROVED BY DATE

NOTE TO REVIEWER:
STREIVOR STAINLESS MUST BE NOTIFIED OF ANY CHANGES THAT OCCUR PRIOR TO FABRICATION.

GENERAL NOTES:

NOTES TO ARCHITECT AND/OR CONTRACTOR: STREIVOR, INC. (STREIVOR AIR SYSTEMS, STREIVOR STAINLESS) IS A SPECIALIST IN THE LAYOUT AND DESIGN OF KITCHEN VENTILATION SYSTEMS, AND IN NO WAY PURPORTS TO BE ARCHITECTS OR ENGINEERS.

THIS PLAN IS SUBMITTED FOR THE CONVENIENCE OF THE ARCHITECT AND/OR CONTRACTOR AND IS DONE FROM AVAILABLE ARCHITECTURAL INFORMATION. ALL MEASUREMENTS ARE SUBJECT TO PHYSICAL VERIFICATION AND ANY DEVIATIONS OR DISCREPANCIES SHALL BE DIRECTED TO THE ATTENTION OF STREIVOR, INC. IN WRITING.

STREIVOR, INC. ACCEPTS NO RESPONSIBILITY FOR WORK DONE BY SAID ARCHITECT OR GENERAL CONTRACTOR OR THEIR REPRESENTATIVES OR SUBCONTRACTORS, AND WILL NOT STAND ANY EXPENSE FOR CHANGES MADE NECESSARY DUE TO LOCAL BUILDING CODES, ORDINANCES, STRUCTURAL CONDITIONS, OR BY ANY SUBSTITUTIONS OR CHANGES IN EQUIPMENT SHOWN ON THIS PLAN.

ANY ERRORS, AMBIGUITIES OR OMISSIONS IN THIS PLAN OR SPECIFICATIONS SHALL BE REPORTED TO STREIVOR, INC. FOR CORRECTIONS BEFORE ANY OF THE WORK IS STARTED, UNLESS EXPRESSLY STIPULATED, NO ADDITIONAL ALLOWANCE WILL BE MADE IN FAVOR OF THE OWNER OR CONTRACTOR, BY VIRTUE OF ERROR, AMBIGUITY OR OMISSION WHICH SHOULD HAVE BEEN DISCOVERED DURING THE PREPARATION OF BID ESTIMATES, AND DIRECTED TO THE ATTENTION OF STREIVOR, INC. IN A TIMELY MANNER.

STREIVOR™ AIR SYSTEMS
"STRIVING FOR EXCELLENCE"
2150 KITTY HAWK ROAD, LIVERMORE, CA 94551
PHONE: (925) 960-9090 FAX:(925) 960-9055
WWW.STREIVOR.COM

PROJECT:
CCC WILLITS

---,** -----
THE MARSHALL ASSOCIATES

ITEM #:	44
DATE:	01/12/2021
DRAWN BY:	SWB
CHECKED BY:	JML
CONSULTANT:	THE MARSHALL ASSOCIATES
SCALE:	N.T.S.

△	DESCRIPTION	DATE	INT
△	---	--/--/--	---
△	---	--/--/--	---
△	---	--/--/--	---
△	---	--/--/--	---
△	---	--/--/--	---

DRAWING:
UCS-01
SHEET 01 OF 01

COPYRIGHT © 2021 STREIVOR, INC.

GENERAL SERVICES
Department of General Services
State of California
Real Estate Services Division
Project Management & Development Branch
707 Third Street, Suite 4-105
West Sacramento, California 95605

NICHOLS MELBURG & ROSSETTO
ARCHITECTS + ENGINEERS
300 Knollcrest Drive
Redding, CA. 96002
(530) 222-3300 (530) 222-3538 FAX
http://www.nmrdesign.com

Copyright © 2021
All ideas, designs, arrangements and plans indicated or represented by this drawing are owned by, and the property of, NICHOLS, MELBURG and ROSSETTO and were created, evolved and developed for use on, and in conjunction with, the specified project. None of such ideas, designs, arrangements or plans shall be used by, or disclosed to any person, firm or corporation for any purpose whatsoever without the written permission of NICHOLS, MELBURG and ROSSETTO.

LICENSE STAMPS

LICENSED ARCHITECT — KYLE MATTHEW ROSSETTO — C-22504 — REN 10/31/21 — STATE OF CALIFORNIA

CONSULTANT

The Marshall Associates, Inc.
Foodservice & Laundry Consultants/Designers
3000 Danville Blvd Suite F-344 Alamo, CA 94507
2129 4th Street Santa Rosa, CA 95404
415/677-1200 Fax 415/677-1210

DRAWING STATUS
CONSTRUCTION DOCUMENTS

ISSUE

No.	Date	Description
1	10/22/2020	INITIAL PLAN REVIEW
2	01/08/2021	AGENCY RESUBMITTAL
3	03/22/2021	AGENCY RESUBMITTAL

If drawing is not 30" x 42" it is a reduced print

PROJECT
RESIDENTIAL CENTER, UKIAH: REPLACEMENT OF EXISTING RESIDENTIAL CENTER
440 EAST HILL ROAD
WILLITS, CALIFORNIA 95490
MENDOCINO COUNTY
CALIFORNIA CONSERVATION CORP

Supervisor	Designed	Drawn

DSA Application No.
02-118630

SHEET TITLE
FOODSERVICE
MANUFACTURER DRAWING - UTILITY WALL

DGS Project Number	NMR Project Number
000000000001826	18-6456

Reference North: NORTH
Sheet Scale:
Sheet Number: FS-217

ISSUE DATE
July 9, 2021

REFRIG-O-PAK SYSTEM

ALLOW 36" CLEAR AROUND UNIT

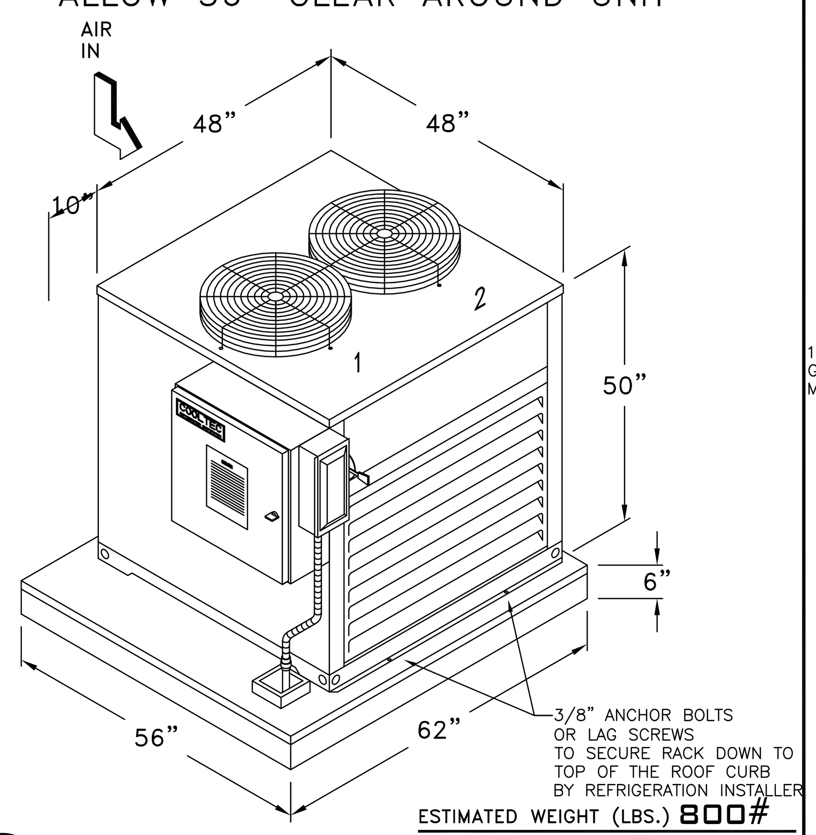

ESTIMATED WEIGHT (LBS.) 800#

A / R-1 "REFRIG-O-PAK" SYSTEM # CRS-4

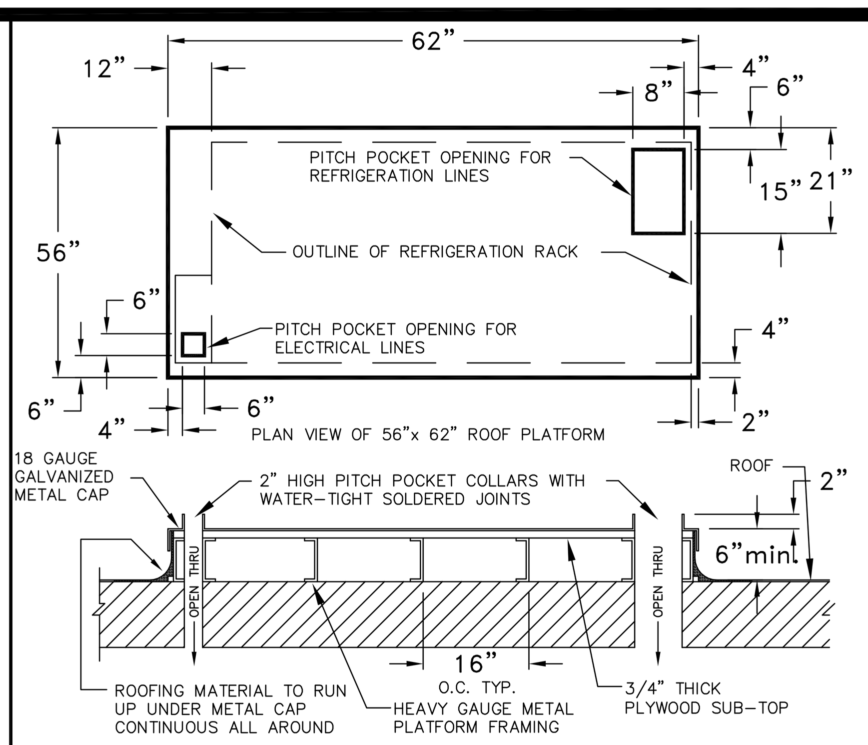

GENERAL CONTRACTOR
1. GENERAL CONTRACTOR TO PROVIDE LEVEL PLATFORM AT CODE HEIGHT.
2. PROVIDE TWO PITCH POCKETS IN THE PLATFORM AS LOCATED.
3. PROVIDE SHEET METAL CAP WITH 2" PITCH POCKET COLLAR AND WITH WATER TIGHT SOLDERED JOINTS.

REFRIGERATION CONTRACTOR
1. BACK FILL PITCH POCKET OPENING WITH EXPANDED FOAM AND ROOF SEALANT AFTER COMPLETION OF ELECTRICAL AND REFRIGERATION PIPING.

E / R-1 PLATFORM DETAIL

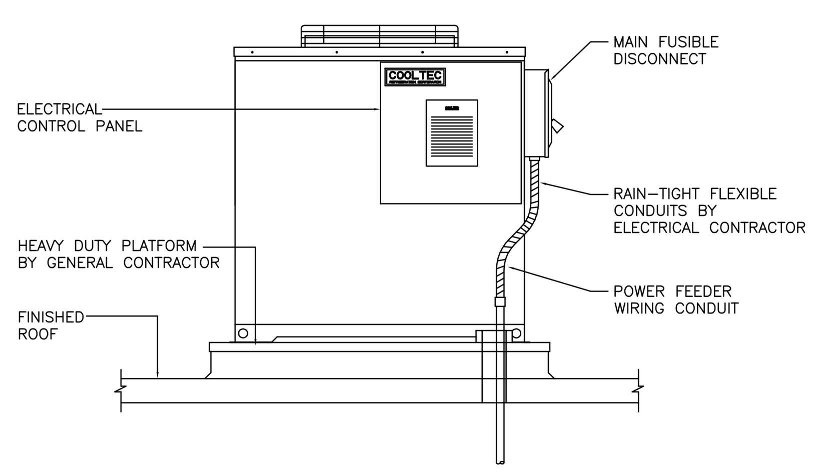

B / R-1 ELECTRICAL CONTROL PANEL

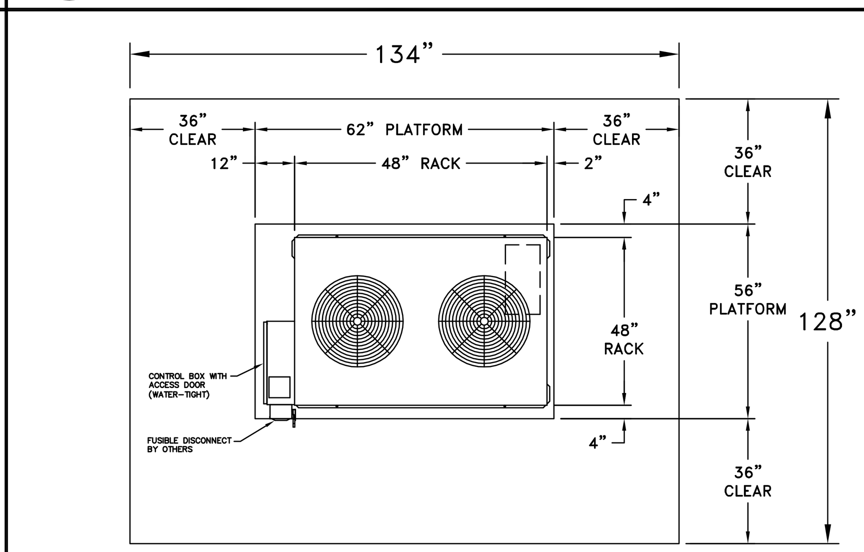

F / R-1 CLEARANCE REQUIREMENT AROUND RACK'S PLATFORM

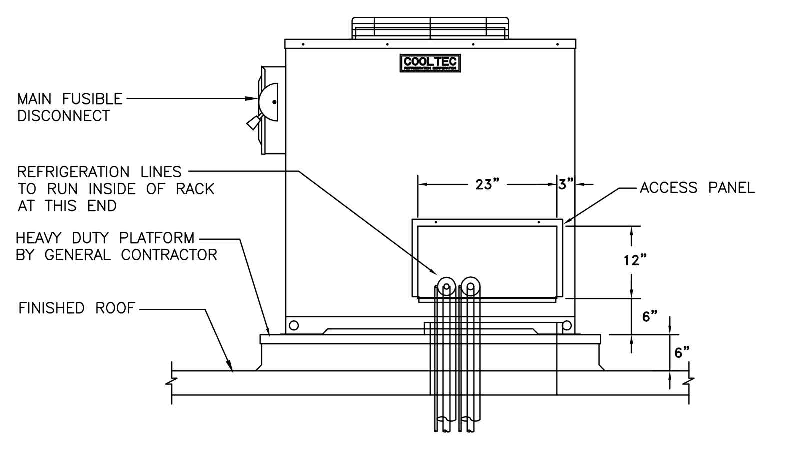

REFRIGERATION LINE SEQUENCE	
A	B

C / R-1 REFRIGERATION PIPING CONNECTION SEQUENCE

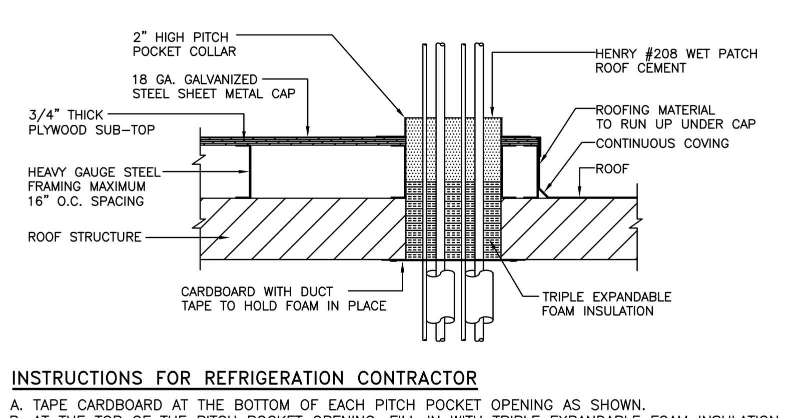

INSTRUCTIONS FOR REFRIGERATION CONTRACTOR
A. TAPE CARDBOARD AT THE BOTTOM OF EACH PITCH POCKET OPENING AS SHOWN.
B. AT THE TOP OF THE PITCH POCKET OPENING, FILL IN WITH TRIPLE EXPANDABLE FOAM INSULATION (DOW CHEMICAL "GREAT STUFF INSULATING FOAM), AND LET FOAM CURE FOR ONE HOUR.
C. APPLY HENRY #208 WET PATCH ROOF CEMENT IN BETWEEN REFRIGERATION PIPING, ELECTRICAL LINES, AND FOAM. LET CURE FOR FOUR HOURS. THIS SHOULD SEAL ALL PIPING AND LINES IN THE PITCH POCKET, TO PREVENT RAIN WATER FROM PENETRATING THROUGH.

D / R-1 RAIN TIGHT PITCH POCKET

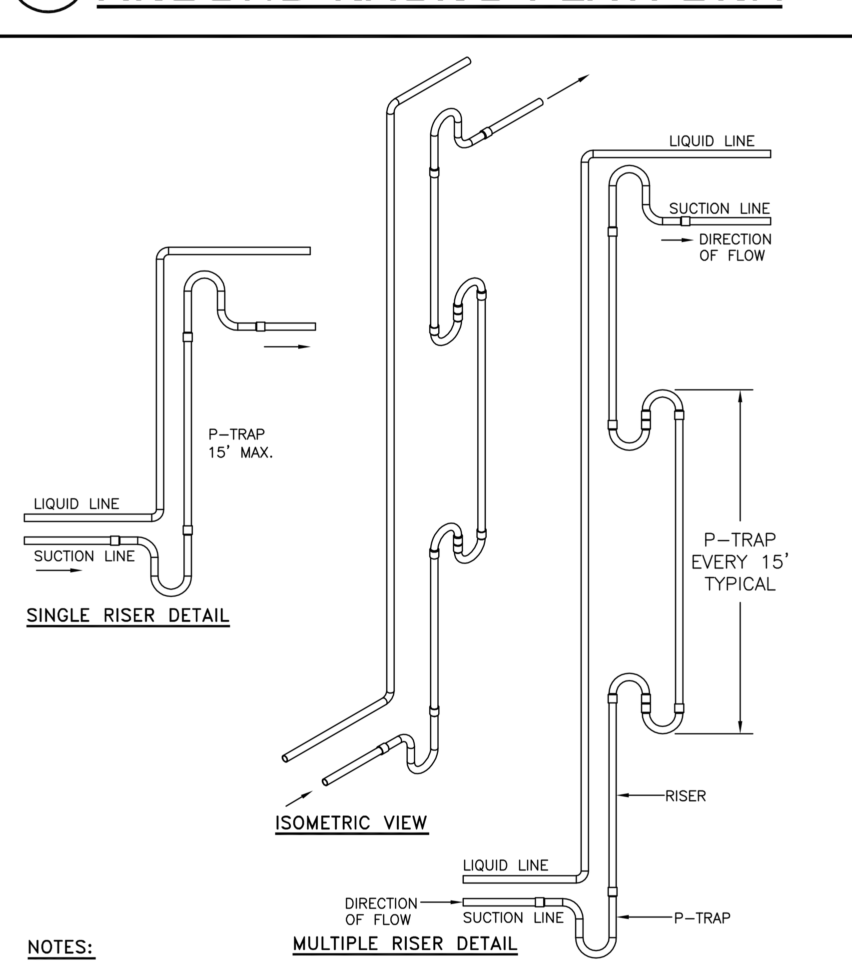

NOTES:
- INSULATE SUCTION LINES WITH ARMAFLEX: 3/4" FOR COMMERCIAL TEMPERATURE AND 1" FOR LOW TEMP.
- ALL JOINTS BRAZED WITH 35% SILVER CONTENT BRAZING ROD
- INSTALL "P" TRAP ON SUCTION LINE EVERY 15' OF EVERY VERTICAL RISE
- INSTALL INVERTED TRAP ON TOP OF THE RISE TO PREVENT OIL FROM SEEPING DOWN
- NOT TO EXCEED 45' VERTICALLY OVER ALL

G / R-1 P-TRAP DETAILS AND SUCTION LINE RISER

COOLTEC ENGINEERING SUMMARY

AMBIENT TEMPERATURE 95°F

POWER SUPPLY: 208V/3PH/60HZ — FUSE SIZE: 50 AMP

CONNECTED LOAD=36.6AMP — MINIMUM AMPACITY= 41.5AMP

SYSTEM	ITEM #	FIXTURES DESCRIPTION	TEMP (F) FIXT.	TEMP (F) SST.	REFRIGERANT R-	REFRIGERANT LBS IN SYSTEM	COMPRESSORS MODEL	H.P.	RATING @ 60 Hz RLA	V	PH	MBH. (95°F)	DEFROST	UNIT COOLER ITEM #	QUANTITY	MODEL	1 ø FAN RLA	V	HEATER FLA	V	PH	SYSTEM TOTAL POWER 208V, 60 Hz AMPS	PH	ROUTE	SUCTION	LIQUID	LINE RUN LENGTH (FEET)	DISCH.	DRAIN	HEAD PRESSURE CONTROL	CRANK CASE HEATER	FAN CYCLE SWITCH	SUCTION ACCUMULATOR	THERMOSTAT	SOLENOID VALVE	THERMOSTATIC EXPANSION VALVE	TIME CLOCK
		CONDENSER FAN MOTORS 2																																			
A	14	WALK-IN COOLER	35	25	448A	16	ZB19KCE-TF5	2.0	9.0	208	3	23.7	D	14.A	2	BEL0105AS6AMA	3.6	115				13.0	3	S	7/8	1/2	100			F	F			F	F	F	KE2MED
		CONDENSER FAN MOTOR						1/2	4.0	208	1																										
B	16	WALK-IN FREEZER	-10	-20	448A	28	ZF18K4E-TF5	6.0	19.6	208	3	21.6	D	16.A	2	BEL0100BS4EMA	2.0	208	18.2	208	1	23.6	3	S	1 3/8	1/2	100			F	F		F	F	F	F	KE2LOW
		CONDENSER FAN MOTOR						1/2	4.0	208	1																										

c UL US LISTED
CONDENSING UNIT
33SZ FILE SA32027

MODEL No. CRS-4

D DEMAND DEFROST (KE2)
E ELECTRIC DEFROST (TIMED, DTSXB240)
G GRAVITY (TIMED, MIL72A)
H HOT GAS (TIMED)
O OFF CYCLE (TEMP.)

B BRANCH
M MAIN
S SINGLE

* SUPPLY CODES:
F – FACTORY INSTALLED
L – LOOSE (FIELD INSTALLED)
M – MANUFACTURER EQUIPPED
R – REFRIGERATION CONTRACTOR

NOTE:
- ALL SYSTEMS ENGINEERED WITH R-448A REFRIGERANT. ANY BASES/COILS NOT SUPPLIED BY COOLTEC MUST BE EQUIPPED WITH R-448A EXPANSION VALVES.
- REFRIGERATION PIPE SIZES ARE BASED ON A MAXIMUM LINE RUN UP TO 150 EQUIVALENT FEET FOR LIQUID AND SUCTION LINES. VERIFY LINE LENGTHS WITH JOB SITE CONDITIONS AND LINE ROUTING AT INDIVIDUAL INSTALLATIONS. IF LINE RUNS ARE GREATER THAN 150 FEET, PLEASE CONTACT COOLTEC FACTORY.
- "COMPRESSOR MOTOR PROTECTED UNDER PRIMARY SINGLE PHASE PROTECTION"
- EFFECTIVE JANUARY 1. 2009, ALL WALK-IN COOLER AND FREEZER EVAPORATIVE COILS INSTALLED IN THE U.S.A. SHALL BE SUPPLIED WITH ENERGY EFFICIENT (EC) MOTORS BASED ON THE FEDERAL ENERGY INDEPENDENCE AND SECURITY ACT (HR-6).
- CONDENSERS ARE ELECTRO-FIN COATED AGAINST SALT AIR CONTAMINATION AND TO MINIMIZE RUST CORROSION.
- ELECTRICAL CONTRACTOR TO SUPPLY POWER FROM BUILDING AND CONNECT POWER TO WALK-IN EVAPORATIVE COIL'S DEMAND DEFROST CONTROLS AND TO DRAIN HEATERS.

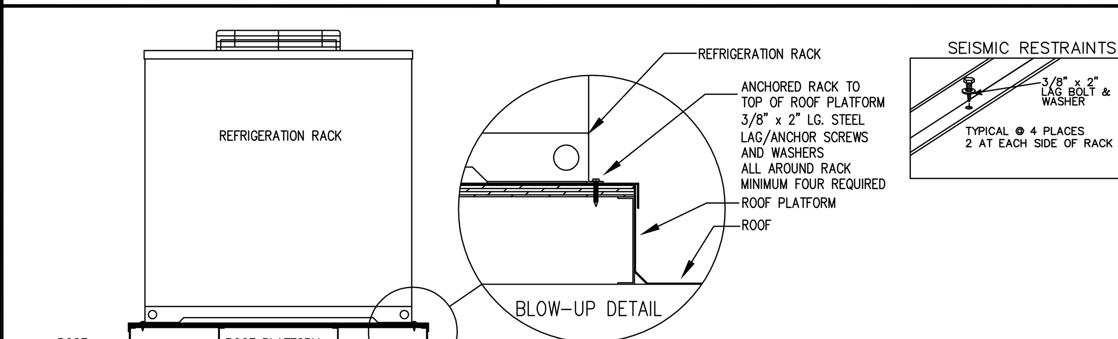

H / R-1 RACK ANCHORING DETAIL

ELECTRICAL CONTRACTOR TO SUPPLY POWER FROM BUILDING AND CONNECT POWER TO WALK-IN EVAPORATIVE COIL'S DEMAND DEFROST CONTROL AND TO COIL'S DRAIN HEATER.

SYSTEM	DEFROST	UNIT COOLER ITEM #	DESCRIPTION	QUANTITY	MODEL	EVAP. COIL RLA	EVAP. COIL VOLTAGE	DRAIN HEATER RLA	DRAIN HEATER VOLTAGE	TOTAL CONNECTED LOAD RLA	TOTAL CONNECTED LOAD VOLTAGE
A	D	14	WALK-IN COOLER	1	BEL0105AS6AMA	1.8	115/1	--	---	1.8	115/1
	D	14	WALK-IN COOLER	1	BEL0105AS6AMA	1.8	115/1	--	---	1.8	115/1
B	D	16	WALK-IN FREEZER	1	BEL0100BS4EMA	9.1	208/1	5.0	208/1	14.1	208/1
	D	16	WALK-IN FREEZER	1	BEL0100BS4EMA	9.1	208/1	5.0	208/1	14.1	208/1

(POWER FROM BUILDING BY ELECTRICAL CONTRACTOR)

NOTE: PROVIDE SEPARATE POWER SOURCE FOR EACH EVAPORATOR. POWER FROM BUILDING.

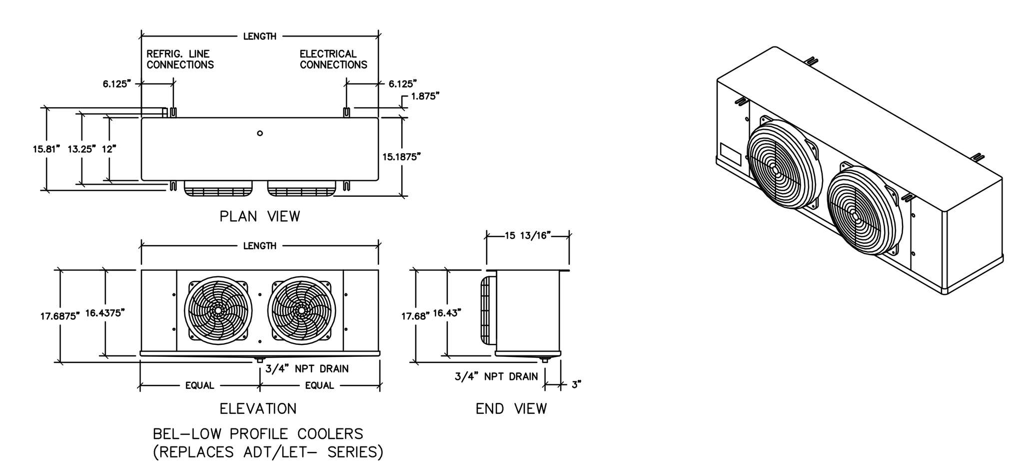

SYSTEM	UNIT MODEL No.	CAPACITY BTU	LENGTH	FANS QTY.	FANS CFM	EC MOTOR 115/1/60	EC MOTOR 208/1/60	ELEC DEFROST 208-1-60	CONNECTIONS (In.) COIL INLET OD	SUCTION ID	EQUALIZER OD	DRAIN MPT	APPROX. SHIP WT. (Lbs.)
A	BEL0105AS6AMA	10150	45-1/2"	2	1305	1.8	--	--	1/2"	5/8"	1/4"	3/4"	52
B	BEL0100BS4EMA	10200	45-1/2"	2	1281	--	1.0	9.1	1/2"	7/8"	1/4"	3/4"	59

J / R-1 UNIT COOLER DETAIL

SPECIFICATION

ITEM NO. 100 REMOTE REFRIGERATION PACKAGE

THE REFRIGERATION PACKAGE SHALL BE PRE-ENGINEERED AND FACTORY ASSEMBLED UNIT, TRADE NAME "REFRIG-O-PAK", AS MANUFACTURED BY COOLTEC REFRIGERATION CORP., 1250 E. FRANKLIN AVE., POMONA, CA 91766. PHONE: (909) 865-2229, FAX: (909) 868-0777. E-MAIL ADDRESS: sales@cooltecrefrigeration.com

CONTRACTOR SHALL FURNISH AND INSTALL, WHERE SHOWN ON PLANS, (1) COOLTEC U.L. APPROVED "REFRIG-O-PAK" AIR COOLED REMOTE REFRIGERATION PACKAGE, MODEL CRS-4, WITH CONTROL PANEL, **208 VOLTS, 3 PHASE, 60 HERTZ.** REFRIGERATION SYSTEM SHALL BE HOUSED IN A WEATHER PROTECTED ENCLOSURE. THE FRAME, ENCLOSURE, AND PANELS SHALL BE FABRICATED OF GALVANIZED STEEL. THE ENTIRE FRAME SHALL BE PRE-ASSEMBLED, WELDED, CLEANED, AND PRIMED AND POWDER COATED EPOXY ENAMEL AND BAKED. CONDENSER FAN MOTORS SHALL BE MOUNTED ON THE TOP OF THE ENCLOSURE FOR BETTER HEAT DISCHARGE.

1. REFRIGERATION UNITS
   A. AIR-COOLED CONDENSING UNITS SHALL BE HERMATIC/GLACIER SCROLL TYPE (COPELAND). EACH UNIT SHALL BE EQUIPPED WITH HIGH-LOW PRESSURE CONTROL, LIQUID LINE DRIER, SIGHT GLASS, HEAD PRESSURE CONTROL, TIME CLOCKS AND PUMP DOWN SOLENOIDS.
   B. ALL COMPRESSOR UNITS SHALL BE NEW FACTORY ASSEMBLED TO OPERATE WITH THE REFRIGERANT SPECIFIED IN THE ENGINEERING SUMMARY SHEET. REFRIGERANT R-448A SHALL BE USED ON ALL COMMERCIAL TEMPERATURE UNITS AND LOW TEMPERATURE UNITS.
   C. THE CONDENSER SHALL BE SECTIONAL, REMOVABLE, WITH RIFLED TUBE SLOTTED FINNED, AND SHALL BE DESIGNED FOR 20°FTD. THE CONDENSER SHALL BE ELECTRO-FIN COATED AGAINST SALT AIR CONTAMINATION AND CORROSION.
2. PRE-PIPING
   A. ALL REFRIGERANT LINES SHALL BE EXTENDED TO ONE SIDE OF THE PACKAGE IN A NEAT AND ORDERLY MANNER. SUCTION LINES MUST BE INSULATED WITH ARMAFLEX (1" THICK FOR LOW TEMP, 3/4" THICK FOR MEDIUM TEMP).
   B. ALL TUBING SHALL BE SECURELY SUPPORTED AND ANCHORED WITH CLAMPS.
   C. SILVER SOLDER AND/OR SIL-FOS SHALL BE USED FOR ALL REFRIGERANT PIPING. SOFT SOLDER IS NOT ACCEPTABLE.
   D. ALL PIPING TO BE PRESSURE TESTED WITH NITROGEN AT 200 PSI. AFTER THE CONDENSING UNIT AND COIL HAVE BEEN CONNECTED, THE BALANCE OF THE SYSTEM SHALL BE LEAKED TESTED WITH ALL VALVES OPENED.
3. CONTROL PANEL
   A. THE PACKAGE SHALL HAVE A FACTORY MOUNTED AND PRE-WIRED CONTROL PANEL COMPLETE WITH MAIN FUSED DISCONNECT. COMPRESSOR CIRCUIT BREAKERS, FUSES, CONTACTORS AND THE TIME CLOCKS WIRED FOR SINGLE POINT CONNECTION.
   B. ELECTRICAL CONTRACTOR SHALL PROVIDE AND INSTALL MAIN POWER LINES TO PANEL AND PROVIDE WIRE HARNESS WIRING FOR CONTROL AND DEFROST HEATER BETWEEN AND THE DEFROST CLOCK AND THE REFRIGERATION FIXTURES, ALL IN ACCORDANCE WITH THE WIRING DIAGRAM AND PER LOCAL CODES.
4. SAFETY CAUTION
   A. EACH SYSTEM AND EVAPORATOR IS SHIPPED UNDER NITROGEN PRESSURE. USE CAUTION AND EXERCISE SAFETY AT ALL TIMES WHEN PREPARING FOR FINAL HOOK-UP.
5. EVAPORATIVE COIL
   A. EVAPORATIVE COILS SHALL BE DIRECT EXPANSION TYPE, FABRICATED OF COPPER TUBES WITH ALUMINUM FINS. ALL EVAPORATIVE COILS SHALL BE PROVIDED WITH SOLENOID VALVE, THERMOSTATIC EXPANSION VALVE, AND ELECTRONIC THERMOSTAT, PIPED AND WIRED TO THE JUNCTION BOX FOR POSITIVE PUMP DOWN.
   B. EVAPORATIVE COILS SHALL BE EQUIPPED WITH ENERGY SAVING "EC" MOTORS.

CONSTRUCTION NOTES FOR TRADES

1. GENERAL CONTRACTOR
   A. CONTRACTORS SHALL VERIFY ALL DIMENSIONS AND COORDINATE WITH OTHER TRADES.
   B. GENERAL CONTRACTOR TO VERIFY AND CO-ORDINATE LOCATION OF REFRIGERATION RACK WITH REFRIGERATION CONTRACTOR TO SATISFY LOCAL CODE REQUIREMENTS AND MAINTENANCE OF THE RACK.
   C. GENERAL CONTRACTOR TO VERIFY REFRIGERATION LINE RUNS THRU TO ROOF OR MULTI-STORY BUILDING PRIOR TO CONSTRUCTION WITH REFRIGERATION CONTRACTOR FOR ACCESSIBILITY.
   D. GENERAL CONTRACTOR TO VERIFY ACCESS OF CRANE OR MECHANICAL LIFT WITH REFRIGERATION CONTRACTOR PRIOR TO CONSTRUCTION (IF REQUIRED).
   E. GENERAL CONTRACTOR SHALL PREPARE AND WEATHER PROOF THE PLATFORM AND CURBED OPENINGS FOR REFRIGERATION PIPING AND ELECTRICAL CONDUIT. ROOF PAD TO BE CONSTRUCTED OF HEAVY DUTY STEEL FRAMING, AND THE FINISHED HEIGHT DICTATED PER LOCAL CODES.
   F. PROVIDE SHEET METAL CAP WITH 2" HIGH PITCH POCKET COLLAR AND WATER TIGHT SOLDERED JOINTS.
   G. GENERAL CONTRACTOR TO ALLOW 3'-0" (36") OF CLEAR SPACE AROUND ROOF PAD FOR MAINTENANCE.
   H. ALL CORE DRILLING REQUIRED FOR REMOTE REFRIGERATION PIPING WORK BY THE REFRIGERATION CONTRACTOR, IS IN THE GENERAL CONTRACTOR'S SCOOP OF WORK. COORDINATE EXACT LOCATION AND NUMBER OF PENETRATIONS WITH THE REFRIGERATION CONTRACTOR AND COMPLY WITH ALL LANDLORD REQUIREMENTS FOR X-RAY OF SLAB PRIOR TO WORK.
   I. ANY ATTACHMENT TO BUILDING STRUCTURE FOR LOAD BEARING WEIGHT TO BE PROVIDED AND CO-ORDINATED BY GENERAL CONTRACTOR.
   J. GENERAL CONTRACTOR TO BACKFILL ALL PITCH POCKETS TO TOP WITH TAR OR PITCH AFTER REFRIGERATION AND ELECTRICAL LINES HAVE BEEN RUN.
2. REFRIGERATION CONTRACTOR
   A. REFRIGERATION CONTRACTOR SHALL RUN ALL REFRIGERATION LINES WHICH EXTEND DOWN THRU WALL(S) BEFORE WALL(S) ARE CLOSED UP WHEN CONDUIT IS NOT PROVIDED.
   B. REFRIGERATION CONTRACTOR TO SEAL BOTH ENDS OF CONDUIT WITH FOMOFIL AFTER ALL LINES HAVE BEEN RUN. IF PULL BOX(ES) ARE SPECIFIED, THEY MUST BE A MINIMUM 12"x 12".
   C. REFRIGERATION CONTRACTOR SHALL INSULATE ALL REFRIGERATION SUCTION LINES.
   D. REFRIGERATION CONTRACTOR SHALL VERIFY LOCATION OF BLOWER COIL(S) AND COMPRESSOR(S) FOR ALL REFRIGERATED AREAS.
   E. REFRIGERATION CONTRACTOR SHALL VERIFY LOCATION OF PITCH POCKET(S) FOR REFRIGERATION LINE PENETRATION THRU ROOF WITH GENERAL CONTRACTOR. GENERAL CONTRACTOR TO INSTALL ALL PITCH POCKETS.
   F. CONTRACTOR SHALL USE ONLY CLEAN DEHYDRATED, SEALED REFRIGERATION GRADE A.C.R. COPPER TUBING. USE ONLY LONG RADIUS ELBOWS TO REDUCE FLOW RESISTANCE AND LINE BREAKAGE.
   G. SILVER SOLDER AND/OR SIL-FOS SHALL BE USED ON ALL REFRIGERANT PIPING. SOFT SOLDER IS NOT ACCEPTABLE. USE MINIMUM 35% SILVER SOLDER FOR DISSIMILAR METALS.
   H. ALL PIPING MUST BE SUPPORTED WITH HANGERS THAT CAN WITHSTAND THE COMBINED WEIGHT OF TUBING, INSULATION, VALVES, AND FLUID IN THE TUBING.
   I. USE NITROGEN IN THE COPPER TUBING DURING BRAZING TO PREVENT FORMATION OF COPPER OXIDES. LIQUID AND SUCTION LINES MUST BE FREE TO EXPAND INDEPENDENTLY OF EACH OTHER. DO NOT EXCEED 100 FEET WITHOUT A CHANGE IN DIRECTION OR AN OFFSET. PLAN PROPER PITCHING, EXPANSION ALLOWANCE, AND P-TRAPS AT THE BASE OF ALL SUCTION RISERS AND AT EVERY 15 FEET OF EVERY VERTICAL RISE. INSTALL SERVICE VALVES AT SEVERAL LOCATIONS FOR EASE OF MAINTENANCE. THESE VALVES MUST BE APPROVED FOR 450 PSI WORKING PRESSURE.
   J. ALL PIPING TO BE PRESSURE TESTED WITH NITROGEN AT 200 PSI WITH ALL VALVES OPEN AND HELD FOR 12 HOURS. ELECTRONIC LEAK DETECTORS SHALL BE USED TO LOCATE ALL LEAKS.
   K. COMPLETE SYSTEM SHALL BE EVACUATED TO 500 MICRONS WITH VACUUM PUMP BEFORE CHARGING THE SYSTEM.
   L. ONCE SYSTEM IS CHARGED AND RUNNING, ADJUST ALL CONTROLS ______ INCLUDING PRESSURE CONTROLS, EXPANSION VALVES, THERMOSTATS, AND TIME CLOCKS. RETURN AFTER 24 HOURS TO VERIFY PROPER OPERATION OF SYSTEMS.
   M. REFRIGERATION CONTRACTOR TO PROVIDE AND INSTALL DRAIN LINE HEATER WITH INSULATION IN FREEZER TO BE CONNECTED BY ELECTRICAL CONTRACTOR.
   N. REFRIGERANT SUCTION LINES OUTSIDE OF REFRIGERATED COMPARTMENTS, NOT RUN IN CONDUIT, SHALL BE INSULATED BACK TO COMPRESSOR WITH ARMSTRONG ARMA-FLEX AP-25/50 FOAMED PLASTIC INSULATION OR EQUAL IN ACCORD WITH DIRECTION OF THE MANUFACTURER. MINIMUM THICKNESS SHALL BE 3/4 INCH FOR COMMERCIAL TEMPERATURE AND 1.0 INCH FOR LOW TEMPERATURE.
   O. FILL ROOF REFRIGERATION AND ELECTRICAL PITCH POCKETS WITH FOAM AND SEALANT.
   P. REFRIGERATION CONTRACTOR TO SEAL ALL REFRIGERATION LINE PENETRATIONS MADE THRU WALK-IN COOLERS/FREEZERS, AND REFRIGERATED BASE SECTIONS OF COUNTERS.
3. ELECTRICAL CONTRACTOR
   A. ELECTRICAL CONTRACTOR TO PROVIDE MAIN POWER FOR THE REFRIGERATION PACKAGE AND CONNECT CONTROL AND DEFROST SYSTEMS.
   B. ELECTRICAL CONTRACTOR TO PROVIDE POWER FOR MEDIUM AND LOW TEMPERATURE EVAPORATOR COILS. POWER FROM BUILDING. PROVIDE SEPARATE POWER SOURCE FOR EACH EVAPORATOR.
   C. ELECTRICAL CONTRACTOR TO CONNECT DRAIN-LINE HEATER IN THE FREEZER.
   D. ALL ELECTRICAL WIRING AND INSTALLATION SHALL BE ACCORDANCE WITH THE WIRING DIAGRAM AND PER LOCAL CODES.
   E. IF CONTRACTED, ELECTRICAL CONTRACTOR TO INSTALL ALL CONDUITS FOR REFRIGERATION LINES IN WALLS, PRIOR TO WALLS ARE CLOSED UP. ALL PULL BOXES MUST BE A MINIMUM OF 12"x 12".
4. PLUMBING CONTRACTOR
   A. PLUMBING CONTRACTOR TO PROVIDE TYPE "M" COPPER DRAIN LINES FOR WALK-IN REFRIGERATOR AND FREEZER, PITCHED 1/2 INCH PER FOOT OF RUN. IN FREEZER, HEATED DRAIN LINE MUST BE INSULATED TO PREVENT FREEZING. TRAP DRAIN LINES OUTSIDE OF REFRIGERATED SPACE TO AVOID ENTRANCE OF WARM AND MOIST AIR.
   B. CONTRACTOR TO PROVIDE INDIVIDUAL DRAIN LINE FOR EACH EVAPORATOR UNLESS OTHERWISE CALLED FOR IN THE PLANS.
   C. ALL PLUMBING INSTALLATION SHALL BE IN ACCORDANCE WITH LOCAL CODES.

ROOF MOUNT

REV LEVEL	DESCRIPTION	DATE
A	SUBMITTAL DRAWING	01/12/21

DRAWING APPROVAL
"PRODUCTION LEAD TIME: 4-6 WEEKS AFTER RECEIPT OF APPROVED DRAWINGS AND PURCHASE ORDER. SEND APPROVED DRAWING TO "KATHERINE SANCHEZ"
APPROVED BY:____
DATE:____

COOLTEC REFRIGERATION CORP.
1250 E. FRANKLIN AVENUE, POMONA, CA 91766
PHONE: (909) 865-2229 FAX: (909) 868-0777
E-MAIL: sales@cooltecrefrigeration.com

DRAWING TITLE: REFRIGERATION PLAN
PROJECT NAME: CCC WILLITS DSA SFM

DRAWN BY: APO
CHECKED BY: PAUL BEDI
DATE: 01/12/2021
LATEST REVISION
DRAWING NO.: CTR2826
SHEET R-1, 1 OF 2 SHEETS

IDENTIFICATION STAMP
DIV. OF THE STATE ARCHITECT
APP: 02-118630 INC:
REVIEWED FOR
SS ☐ FLS ☐ ACS ☑
DATE: 04/13/2021

OFFICE OF THE STATE FIRE MARSHAL
APPROVED FIRE AND PANIC ONLY
Approval of this plan does not authorize or approve any omission or deviation from applicable regulations. Final approval is subject to field inspection. One set of approved plans shall be available on the project site at all times.
PERMIT NO.: 20-N-2332-CP
REVIEWED BY: LITO CATAYLO, OSFM
DATE: 3/1/2021

DGS GENERAL SERVICES
Department of General Services
State of California
Real Estate Services Division
Project Management & Development Branch
707 Third Street, Suite 4-105
West Sacramento, California 95605

NICHOLS MELBURG & ROSSETTO
ARCHITECTS + ENGINEERS
300 Knollcrest Drive
Redding, CA. 96002
(530) 222-3300 (530) 222-3538 FAX
http://www.nmrdesign.com

Copyright © 2021
All ideas, designs, arrangements and plans indicated or represented by this drawing are owned by, and the property of, NICHOLS, MELBURG and ROSSETTO and were created, evolved and developed for use on, and in conjunction with, the specified project. None of such ideas, designs, arrangements or plans shall be used by, or disclosed to any person, firm or corporation for any purpose whatsoever without the written permission of NICHOLS, MELBURG and ROSSETTO.

LICENSE STAMPS
LICENSED ARCHITECT KYLE MATTI C-27504 REN. 10/31/21 STATE OF CALIFORNIA

CONSULTANT
The Marshall Associates, Inc.
Foodservice & Laundry Consultants/Designers
3000 Danville Blvd Suite F-344 Alamo, CA 94507
2129 4th Street Santa Rosa, CA 95404
415/677-1200 Fax 415/677-1210

DRAWING STATUS
CONSTRUCTION DOCUMENTS

ISSUE

No.	Date	Description
1	10/22/2020	INITIAL PLAN REVIEW
2	01/08/2021	AGENCY RESUBMITTAL
3	03/22/2021	AGENCY RESUBMITTAL

If drawing is not 30" x 42" it is a reduced print

PROJECT
RESIDENTIAL CENTER, UKIAH: REPLACEMENT OF EXISTING RESIDENTIAL CENTER
440 EAST HILL ROAD
WILLITS, CALIFORNIA 95490
MENDOCINO COUNTY
CALIFORNIA CONSERVATION CORP

Supervisor | Designed | Drawn

DSA Application No.
02-118630

SHEET TITLE
FOODSERVICE MANUFACTURER DRAWING - REFRIGERATION

DGS Project Number: 000000000001826
NMR Project Number: 18-6456

Reference North: NORTH
Sheet Scale
Sheet Number: FS-218

ISSUE DATE
July 9, 2021

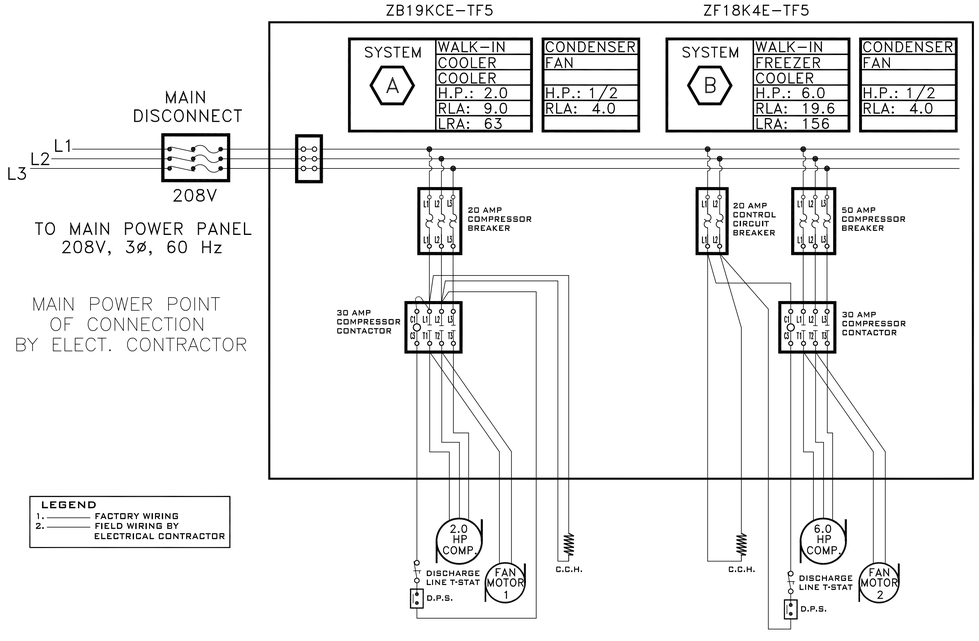

A R-2 WIRING DIAGRAM

POWER REQUIRED FOR LOW TEMPERATURE EVAPORATOR COILS.
POWER FROM BUILDING: SUPPLIED BY ELECTRICAL CONTRACTOR

SYSTEM	DEFROST	ITEM #	DESCRIPTION	QUANTITY	MODEL	UNIT COOLER POWER FROM BUILDING			
						EVAP. COIL		DRAIN HEATER	
						RLA	VOLTAGE	RLA	VOLTAGE
B	D	16	WALK-IN FREEZER	1	BEL0100BS4EMA	9.1	208/1	5.0	208/1
	D	16	WALK-IN FREEZER	1	BEL0100BS4EMA	9.1	208/1	5.0	208/1

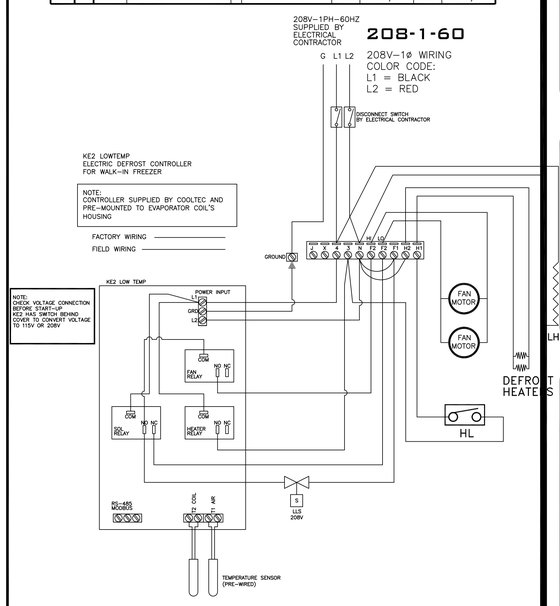

B R-2 DEMAND DEFROST- KE2 LOW TEMP WIRING DIAGRAM FOR FREEZER COIL

POWER REQUIRED FOR MEDIUM TEMPERATURE EVAPORATOR COILS.
POWER FROM BUILDING: SUPPLIED BY ELECTRICAL CONTRACTOR

SYSTEM	DEFROST	ITEM #	DESCRIPTION	QUANTITY	MODEL	UNIT COOLER POWER FROM BUILDING	
						RLA	VOLTAGE
A	D	14	WALK-IN COOLER	1	BEL0105AS6AMA	1.8	115/1
	D	14	WALK-IN COOLER	1	BEL0105AS6AMA	1.8	115/1

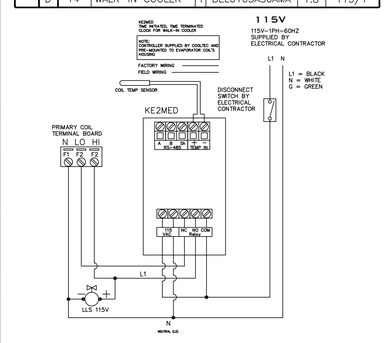

C R-2 DEMAND DEFROST- KE2 MED. TEMP WIRING DIAGRAM FOR COOLER COIL

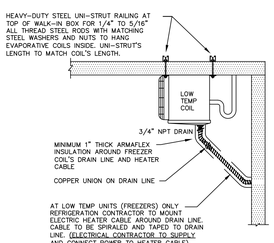

D R-2 WALK-IN'S FREEZER CONDENSATE DRAIN LINE

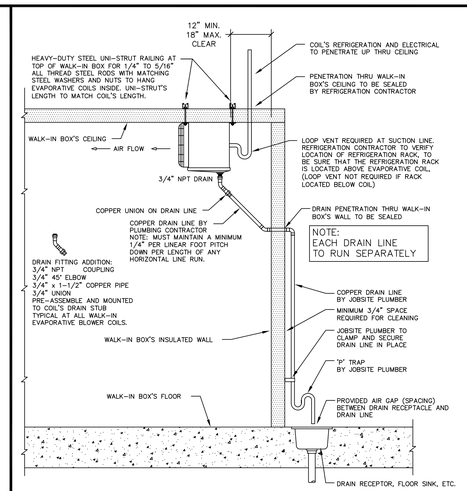

E R-2 WALK-IN'S COIL MOUNT AND CONDENSATE DRAIN LINE

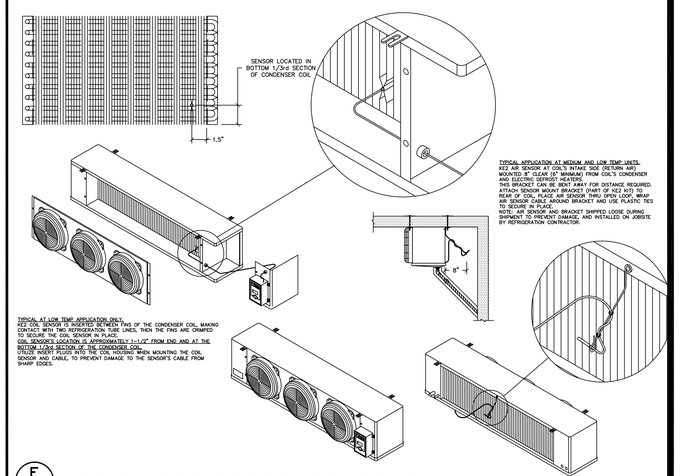

F R-2 KE2 SENSOR PROBE LOCATIONS

REV LEVEL	DESCRIPTION	DATE
1	SUBMITTAL DRAWING	01/12/21

DRAWING APPROVAL

"PRODUCTION LEAD TIME:
4-6 WEEKS AFTER RECEIPT
OF APPROVED DRAWINGS AND
PURCHASE ORDER.
SEND APPROVED DRAWING TO
"KATHERINE SANCHEZ"

APPROVED BY:_____

DATE:_____

COOLTEC
REFRIGERATION CORP.
1250 E. FRANKLIN AVENUE, POMONA, CA 91766
PHONE: (909) 865-2229 FAX: (909) 868-0777
E-MAIL: sales@cooltecrefrigeration.com

DRAWING TITLE: **REFRIGERATION PLAN**

PROJECT NAME: **CCC WILLITS DSA SFM**

DRAWN BY	APO
CHECKED BY	PAUL BEDI
DATE	01/12/2021
LATEST REVISION	
DRAWING NO.	CTR2826
SHEET	R-2
	2 OF 2 SHEETS

IDENTIFICATION STAMP
DIV. OF THE STATE ARCHITECT
APP: 02-118630 INC:
REVIEWED FOR
SS ☐ FLS ☐ ACS ☑
DATE: 04/13/2021

OFFICE OF THE STATE FIRE MARSHAL
APPROVED FIRE AND PANIC ONLY
Approval of this plan does not authorize or approve any omission or deviation from applicable regulations. Final approval is subject to field inspection. One set of approved plans shall be available on the project site at all times.
PERMIT NO. 20 N 2332-CP
REVIEWED BY: LEO CATRYLO, OSFM
DATE: 3 / /2021

GENERAL SERVICES
Department of General Services
State of California
Real Estate Services Division
Project Management & Development Branch
707 Third Street, Suite 4-105
West Sacramento, California 95605

NICHOLS MELBURG & ROSSETTO
ARCHITECTS + ENGINEERS
300 Knollcrest Drive
Redding, CA. 96002
(530) 222-3300 (530) 222-3538 FAX
http://www.nmrdesign.com

Copyright © 2021
All ideas, designs, arrangements and plans indicated or represented by this drawing are owned by, and the property of, NICHOLS, MELBURG and ROSSETTO and were created, evolved and developed for use on, and in conjunction with, the specified project. None of such ideas, designs, arrangements or plans shall be used by, or disclosed to any person, firm or corporation for any purpose whatsoever without the written permission of NICHOLS, MELBURG and ROSSETTO.

LICENSE STAMPS

LICENSED ARCHITECT — KYLE MATTHEW MELBURG — C-27504 — REN 10/31/21 — STATE OF CALIFORNIA

CONSULTANT

The Marshall Associates, Inc.
Foodservice & Laundry Consultants/Designers
3000 Danville Blvd Suite F-344 Alamo, CA 94507
2129 4th Street Santa Rosa, CA 95404
415/677-1200 Fax 415/677-1210

DRAWING STATUS
CONSTRUCTION DOCUMENTS

ISSUE

No.	Date	Description
1	10/22/2020	INITIAL PLAN REVIEW
2	01/08/2021	AGENCY RESUBMITTAL
3	03/22/2021	AGENCY RESUBMITTAL

If drawing is not 30" x 42" it is a reduced print

PROJECT
RESIDENTIAL CENTER, UKIAH: REPLACEMENT OF EXISTING RESIDENTIAL CENTER
440 EAST HILL ROAD
WILLITS, CALIFORNIA 95490
MENDOCINO COUNTY
CALIFORNIA CONSERVATION CORP

Supervisor	Designed	Drawn

DSA Application No.
02-118630

SHEET TITLE
FOODSERVICE
MANUFACTURER DRAWING - REFRIGERATION

DGS Project Number	NMR Project Number
000000000001826	18-6456

Reference North	Sheet Scale
NORTH	Sheet Number FS-219

ISSUE DATE
July 9, 2021

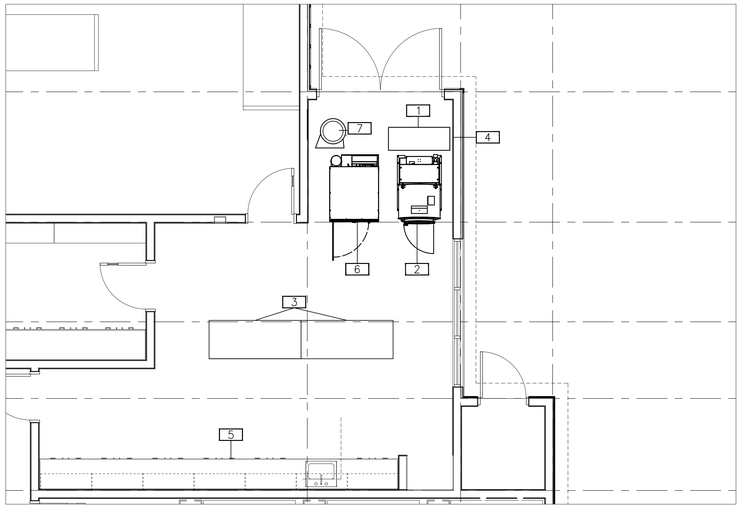

LAUNDRY FLOOR PLAN

SCALE: 1/4" = 1'-0"

LAUNDRY EQUIPMENT SCHEDULE

ITEM	QTY	DESCRIPTION	MANUFACTURER	MODEL NUMBER
1	1	FLOOR TROUGH	H-M COMPANY	IN GROUND 18x48
2	1	60 LB WASHER/EXTRACTOR	MILNOR	30022VRJ
3	2	MOBILE FOLDING TABLE	EAGLE GROUP	ADJUSTABLE SERIES
4	1	DETERGENT PUMP	PROVIDED BY VENDOR	NOT IN LEC CONTRACT
5	1	FOLDING COUNTER WITH SINK	SPECIFIED BY ARCHITECT	NOT PART OF LEC CONTRACT
6	1	80 LB. DRYER	DEXTER	T-80
7	1	LINT COLLECTOR	CLEAN CYCLE SYSTEMS	LLSB-8
8		NOT USED		
9		NOT USED		
10		NOT USED		

ABBREVIATIONS:

LEC	LAUNDRY EQUIPMENT CONTRACTOR		
NIC	NOT IN CONTRACT		
ALT	ADD ALTERNATE		

SCHEDULE NOTES:

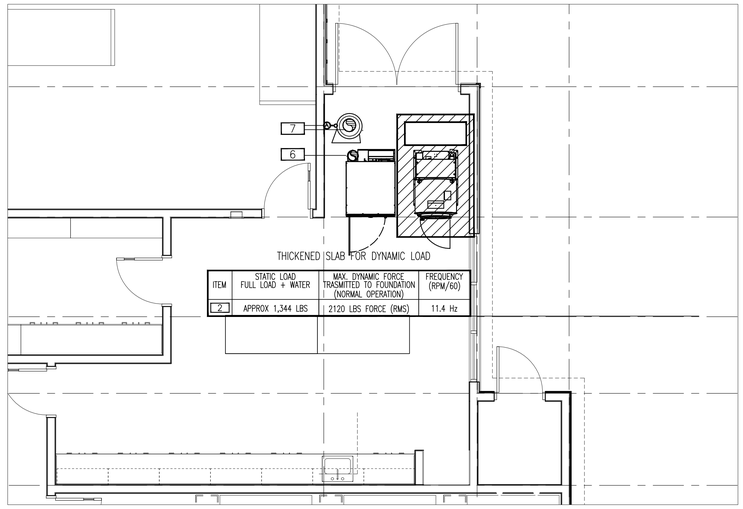

ITEM	STATIC LOAD FULL LOAD + WATER	MAX. DYNAMIC FORCE TRASMITTED TO FOUNDATION (NORMAL OPERATION)	FREQUENCY (RPM/60)
2	APPROX 1,344 LBS	2120 LBS FORCE (RMS)	11.4 Hz

LAUNDRY FLOOR PLAN

SCALE: 1/4" = 1'-0"

LAUNDRY VENTILATION / AIR / WALL BACKING SCHEDULE

ITEM	QTY	DESCRIPTION	VENTILATION EXHAUST			COMPRESSED AIR SUPPLY				VACUUM		WALL BACKING	
			SIZE	CFM	WGSP	SIZE	CFM	PSI	HT	SIZE	HT	HEIGHT	OC
1	1	FLOOR TROUGH											
2	1	60 LB WASHER/EXTRACTOR											
3	2	MOBILE FOLDING TABLE											
4	1	DETERGENT PUMP											
5	1	FOLDING COUNTER WITH SINK											
6	1	80 LB. DRYER	8" DIA	800	0.25"								
7	1	LINT COLLECTOR	10" DIA	1000									
8		NOT USED											
9		NOT USED											
10		NOT USED											

ABBREVIATIONS:

CFM	CUBIC FEET/MINUTE	OC	ON CENTER
WGSP	WATER GAUGE STATIC PRESSURE	FA	FROM ABOVE
PSI	POUNDS/SQUARE INCH		
HT	HEIGHT		

SCHEDULE NOTES:

CONNECTED LOAD = EACH CONNECTION AS SHOWN ON DRAWING

DRAWING NOTES:

A MECHANICAL DIVISION TO INSULATE DUCTS FROM CONNECTION TO +84" A.F.F.

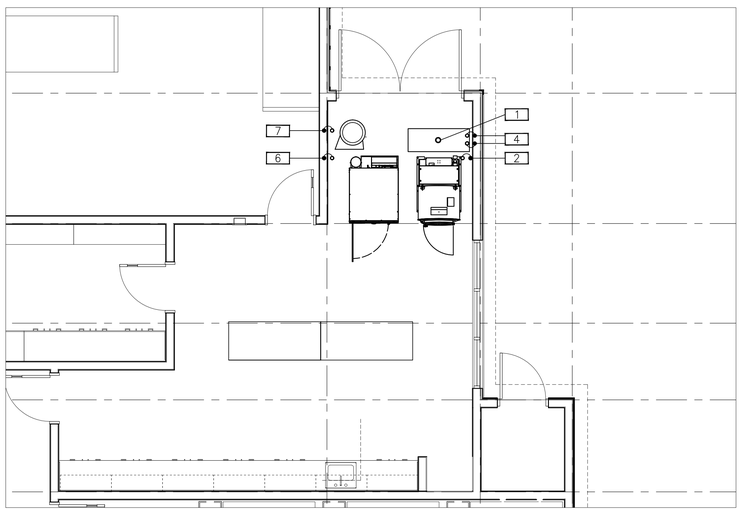

LAUNDRY FLOOR PLAN

SCALE: 1/4" = 1'-0"

LAUNDRY PLUMBING ROUGH-IN SCHEDULE

ITEM	QTY	DESCRIPTION	WATER				GAS			STEAM					WASTE		
			CW	HW	HT	GPH	SUP	MBH	HT	SUP	RET	HT	LB/H	PSI	IND	DIR	HT
1	1	FLOOR TROUGH														6"	-18"
2	1	60 LB WASHER/EXTRACTOR	3/4"	3/4"	FA	50									3"		
3	2	MOBILE FOLDING TABLE															
4	1	DETERGENT PUMP															
5	1	FOLDING COUNTER WITH SINK															
6	1	80 LB. DRYER	3/4"		FA												
7	1	LINT COLLECTOR	3/4"		42"												
8		NOT USED															
9		NOT USED															
10		NOT USED															

ABBREVIATIONS:

CW/HW	COLD / HOT WATER	SUP	SUPPLY	IND	INDIRECT WASTE (AIR GAP)
HT	HEIGHT	RET	RETURN	DIR	DIRECT WASTE
GPH	GALLONS PER HOUR (HW)	LB/H	POUNDS PER HOUR		
MBH	BRITISH THERMAL UNIT x 1000	FA	FROM ABOVE		

SCHEDULE NOTES:

CONNECTED LOAD = EACH CONNECTION AS SHOWN ON DRAWING

REFER TO PLUMBING DRAWINGS FOR FLOOR DRAIN INFORMATION

DRAWING NOTES:

A PLUMBING DIVISION TO INTERCONNECT COLD WATER TO LINT COLLECTOR AND INSTALL SOLENOID PROVIDED BY LEC

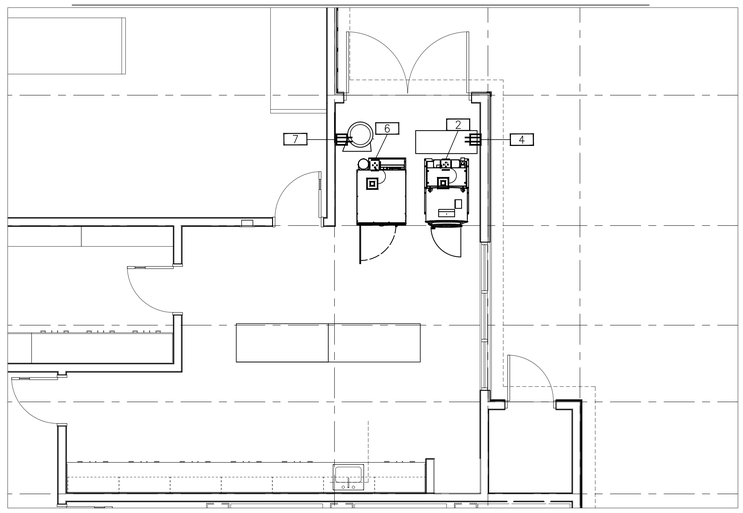

LAUNDRY FLOOR PLAN

SCALE: 1/4" = 1'-0"

LAUNDRY ELECTRICAL ROUGH-IN SCHEDULE

ITEM	QTY	DESCRIPTION	CONNECTED LOAD							CONNECTION TYPE		
			120/1	120/208/1	120/208/3	208/1	208/3	480/3	HT	C&P	RECP	HW
1	1	FLOOR TROUGH										
2	1	60 LB WASHER/EXTRACTOR					8 AMP		FA			●
3	2	MOBILE FOLDING TABLE										
4	1	DETERGENT PUMP	9.4 AMP						48"	●	●	
5	1	FOLDING COUNTER WITH SINK										
6	1	80 LB. DRYER					120 AMP		FA			●
7	1	LINT COLLECTOR	3 AMP						48"			●
8		NOT USED										
9		NOT USED										
10		NOT USED										

ABBREVIATIONS:

CONN	CONNECTION TYPE BY DIVISION 16	FA	FROM ABOVE
C&P	CORD AND PLUG	HT	HEIGHT
RECP	RECEPTACLE		
HW	HARDWIRE		

SCHEDULE NOTES:

CONNECTED LOAD = EACH CONNECTION AS SHOWN ON DRAWING

CONNECTION TYPES BY DIVISION 26

DRAWING NOTES:

A ELECTRICAL DIVISION TO INTERCONNECT LINT COLLECTOR COMPONENTS POWER AND CONTROL WIRING

LAUNDRY NOTES:

GENERAL CONTRACTOR TO PROVIDE:

1. WORK AS DESCRIBED IN CONTRACT DOCUMENTS AND SUPPLEMENTAL REQUIREMENTS PER SECTION 111000 LAUNDRY EQUIPMENT.
2. OPENINGS/ACCESS FOR ALL LAUNDRY EQUIPMENT.
3. FLOOR DEPRESSIONS AND THICKENED SLABS AS SHOWN
4. THICKENED SLABS AS SHOWN.
5. TRENCH DRAINS WITH COVERS AS SHOWN.

MECHANICAL DIVISION TO PROVIDE:

1. WORK AS DESCRIBED IN CONTRACT DOCUMENTS AND SUPPLEMENTAL REQUIREMENTS PER SECTION 11100 LAUNDRY EQUIPMENT.
2. EXHAUST SYSTEMS AND CONTROLS.
3. FINAL DUCT CONNECTIONS.
4. ROUGH-IN AND FINAL CONNECTIONS FOR ALL LAUNDRY EQUIPMENT AS INDICATED ON DRAWINGS AND IN ROUGH-IN SCHEDULE INCLUDING ALL MATERIALS SUCH AS STOPS, VALVES, FILTERS, TRAPS, CHECK VALVES, PIPING, TUBING AND SHUT OFF'S AS REQUIRED.

SYMBOLS:

EXHAUST DUCT CONNECTION

COMPRESSED AIR CONNECTION

THICKENED SLAB CONDITIONS

PLUMBING DIVISION TO PROVIDE:

1. WORK AS DESCRIBED IN CONTRACT DOCUMENTS AND SUPPLEMENTAL REQUIREMENTS PER SECTION 11110 LAUNDRY EQUIPMENT.
2. ROUGH-IN AND FINAL CONNECTIONS FOR ALL FOODSERVICE EQUIPMENT AS INDICATED ON DRAWINGS AND IN PLUMBING ROUGH-IN SCHEDULE INCLUDING ALL MATERIALS SUCH AS STOPS, VALVES, FILTERS, TRAPS, CHECK VALVES, PIPING, TUBING AND SHUT OFF'S AS REQUIRED.
3. PRESSURE REDUCING VALVES AS REQUIRED BY MANUFACTURER.
4. ALL WASTE LINES AS NOTED. MINIMUM DIAMETER OF LINE AS INDICATED IN SCHEDULE REGARDLESS OF CONNECTION SIZE AND SLOPED DOWNWARD WITH ADEQUATE CLEAN-OUT PROVISIONS.
5. MAINTAIN DRAINS AS HIGH AS POSSIBLE ABOVE FLOOR.
6. FLOOR SINKS (SET FLUSH WITH FLOOR).
7. INTERCONNECTIONS AS INDICATED IN ROUGH-IN SCHEDULE AND APPROVED SHOP DRAWINGS.

SYMBOLS:

HOT OR COLD WATER CONNECTION

HOT AND COLD WATER CONNECTION

FLOOR SINK, CONNECTION AS SHOWN ON PLAN

ELECTRICAL CONTRACTOR TO PROVIDE:

1. WORK AS DESCRIBED IN CONTRACT DOCUMENTS AND SUPPLEMENTAL REQUIREMENTS PER LAUNDRY EQUIPMENT SECTION.
2. ROUGH-IN AND FINAL CONNECTION TO ALL LAUNDRY EQUIPMENT AS INDICATED ON DRAWINGS AND IN ELECTRICAL ROUGH-IN SCHEDULE.
3. ALL JUNCTION-BOXES, ELECTRICAL OUTLETS, COVER PLATES, SWITCHES NOT BUILT INTO FIXTURES OR EQUIPMENT.

INTERCONNECTION BETWEEN:

1. CONTROL PANEL AND LINT COLLECTOR.

SYMBOLS:

JUNCTION BOX ROUGH-IN

JUNCTION BOX CONNECTION PROVIDED IN EQUIPMENT

DUPLEX OUTLET ROUGH-IN

IDENTIFICATION STAMP
DIV. OF THE STATE ARCHITECT
APP: 02-118630 INC:
REVIEWED FOR
SS ☐ FLS ☐ ACS ☑
DATE: 04/13/2021

OFFICE OF THE STATE FIRE MARSHAL
APPROVED FIRE AND PANIC ONLY
Approval of this plan does not authorize or approve any omission or deviation from applicable regulations. Final approval is subject to field inspection. One set of approved plans shall be available on the project site at all times.
PERMIT NO. 20 N-2332-CP
REVIEWED BY: LEO CATRILLO, OSFM
DATE: 3 / /2021

DGS GENERAL SERVICES
Department of General Services
State of California
Real Estate Services Division
Project Management & Development Branch
707 Third Street, Suite 4-105
West Sacramento, California 95605

NICHOLS MELBURG & ROSSETTO
ARCHITECTS + ENGINEERS
300 Knollcrest Drive
Redding, CA. 96002
(530) 222-3300 (530) 222-3538 FAX
http://www.nmrdesign.com

Copyright © 2021
All ideas, designs, arrangements and plans indicated or represented by this drawing are owned by, and the property of, NICHOLS, MELBURG and ROSSETTO and were created, evolved and developed for use on, and in conjunction with, the specified project. None of such ideas, designs, arrangements or plans shall be used by, or disclosed to any person, firm or corporation for any purpose whatsoever without the written permission of NICHOLS, MELBURG and ROSSETTO.

LICENSE STAMPS

LICENSED ARCHITECT KYLE MATTI C-27504 REN. 10/31/21 STATE OF CALIFORNIA

CONSULTANT

The Marshall Associates, Inc.
Foodservice & Laundry Consultants/Designers
3000 Danville Blvd Suite F-344 Alamo, CA 94507
2129 4th Street Santa Rosa, CA 95404
415/677-1200 Fax 415/677-1210

DRAWING STATUS
CONSTRUCTION DOCUMENTS

ISSUE

No.	Date	Description
1	10/22/2020	INITIAL PLAN REVIEW
2	01/08/2021	AGENCY RESUBMITTAL
3	03/22/2021	AGENCY RESUBMITTAL

If drawing is not 30" x 42" it is a reduced print

PROJECT
RESIDENTIAL CENTER, UKIAH: REPLACEMENT OF EXISTING RESIDENTIAL CENTER
440 EAST HILL ROAD
WILLITS, CALIFORNIA 95490
MENDOCINO COUNTY
CALIFORNIA CONSERVATION CORP

Supervisor	Designed	Drawn

DSA Application No.
02-118630

SHEET TITLE
LAUNDRY
EQUIPMENT PLAN

DGS Project Number
000000000001826

NMR Project Number
18-6456

Reference North

Sheet Scale

Sheet Number
LS-111

ISSUE DATE
July 9, 2021